INTRODUCTION

How to Use This Manual

This manual is divided into multiple sections. The first page of each section is marked with a black tab that lines up with its corresponding thumb index tab on this page and the back cover. You can quickly find the first page of each section without looking through a full table of contents. The symbols printed at the top corner of each page can also be used as a quick reference system.

Each section includes:

1. A table of contents, or an exploded view index showing:
   - Parts disassembly sequence.
   - Bolt torques and thread sizes.
   - Page references to descriptions in text.
2. Disassembly/assembly procedures and tools.
3. Inspection.
4. Testing/troubleshooting.
5. Repair.
6. Adjustments.

Safety Messages

Your safety, and the safety of others, is very important. To help you make informed decisions, we have provided safety messages, and other safety information throughout this manual. Of course, it is not practical or possible to warn you about all the hazards associated with servicing this vehicle. You must use your own good judgment.

You will find important safety information in a variety of forms including:

- **Safety Labels** — on the vehicle.
- **Safety Messages** — preceded by a safety alert symbol ⚠ and one of three signal words, DANGER, WARNING, or CAUTION. These signal words mean:

⚠ DANGER	You WILL be KILLED or SERIOUSLY HURT if you don't follow instructions.
⚠ WARNING	You CAN be KILLED or SERIOUSLY HURT if you don't follow instructions.
⚠ CAUTION	You CAN be HURT if you don't follow instructions.

- **Instructions** — how to service this vehicle correctly and safely.

All information contained in this manual is based on the latest product information available at the time of printing. We reserve the right to make changes at anytime without notice. No part of this publication may be reproduced, stored in retrieval system, or transmitted, in any form by any means, electronic, mechanical, photocopying, recording, or otherwise, without the prior written permission of the publisher. This includes text, figures, and tables.

As you read this manual, you will find information that is preceded by a NOTICE symbol. The purpose of this message is to help prevent damage to your vehicle, other property, or the environment.

First Edition 07/2005 2,038 pages
All Rights Reserved
Specifications apply to U.S.A. and Canada

HONDA MOTOR CO., LTD.
Service Publication Office

As sections with * include SRS components; special precautions are required when servicing.

General Info
Specifications
Maintenance
*Engine Electrical
Engine
Cooling
Fuel and Emissions
Transaxle
*Steering
Suspension
Brakes (Including ABS)
*Body
*Heating, Ventilation and Air Conditioning
*Body Electrical
*Restraints

Service Manual Index

SUPPLEMENTAL RESTRAINT SYSTEM (SRS)

The Acura RSX SRS includes a driver's airbag in the steering wheel hub, a passenger's airbag in the dashboard above the glove box, seat belt tensioners in the front seat belt retractors, seat belt buckle tensioners in the front seat belt buckles, and side airbags in the front seat-backs. Information necessary to safely service the SRS is included in this Service Manual. Items marked with an asterisk (*) on the contents page include or are located near SRS components. Servicing, disassembling, or replacing these items require special precautions and tools, and should be done only by an authorized Acura dealer.

- To avoid rendering the SRS inoperative, which could lead to personal injury or death in the event of a severe frontal or side collision, all SRS service work must be performed by an authorized Acura dealer.
- Improper service procedures, including incorrect removal and installation of the SRS could lead to personal injury caused by unintentional deployment of the airbags and/or side airbags.
- Do not bump or impact the SRS unit, front impact sensors, side impact sensors whenever the ignition switch is ON (II), or for at least 3 minutes after the ignition switch is turned OFF. Otherwise, the system may fail in a collision, or the airbags may deploy.
- SRS electrical connectors are identified by yellow color coding. Related components are located in the steering column, front console, dashboard, dashboard lower panel, in the dashboard above the glove box, in the front seats, and around the floor. Do not use electrical test equipment on these circuits.

General Information

Chassis and Paint Codes
2002 Model 1-2

Chassis and Paint Codes
2003 Model 1-3

Chassis and Paint Codes
2004 Model 1-4

Chassis and Paint Codes
2005 Model 1-5

Chassis and Paint Codes
2006 Model 1-6

Identification Number Locations 1-7

Danger/Warning/Caution Label Locations 1-8

Under-hood Emission Control Label 1-10

Lift and Support Points 1-12

Towing 1-13

Parts Marking 1-14

Chassis and Paint Codes

2002 Model

Vehicle Identification Number

JH4 DC5 3 8 * 2 C 000001

a b c d e f g h

a. Manufacturer, Make and Type of Vehicle
JH4: HONDA MOTOR CO., LTD.
ACURA passenger vehicle

b. Line, Body and Engine Type
DC5: ACURA RSX/K20A2, K20A3

c. Body Type and Transmission Type
3: 2-door Hatchback/5-speed Manual
2-door Hatchback/6-speed Manual
4: 2-door Hatchback/5-speed Automatic

d. Vehicle Grade (Series)

U.S. Model	Canada Model
0: Type S	0: Type S
8: RSX	6: RSX
	8: Premium

e. Check Digit

f. Model Year
2: 2002

g. Factory Code
C: Saitama Factory in Japan

h. Serial Number
U.S.: 000001—
Canada: 800001—

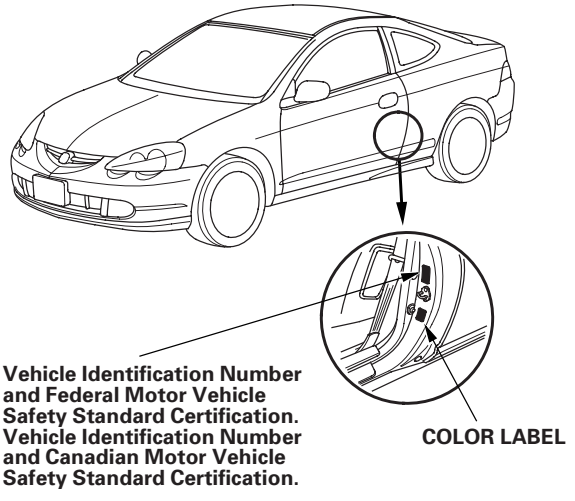

Engine Number

K20A2 - 1400001

a b

a. Engine Type
K20A2: 2.0 L DOHC i-VTEC Sequential Multiport Fuel-injected 200 HP engine
K20A3: 2.0 L DOHC i-VTEC Sequential Multiport Fuel-injected 160 HP engine

b. Serial Number
K20A2: 1400001—
K20A3: 1100001—

Transmission Number

MRMA - 1000001

a b

a. Transmission Type
MRMA: 5-speed Automatic
W2M5: 5-speed Manual
X2M5: 6-speed Manual

b. Serial Number

Paint Code

Code	Color	U.S.	Canada
B-507P	Arctic Blue Pearl	○	○
B-92P	Nighthawk Black Pearl	○	○
B-96P	Eternal Blue Pearl	○	
NH-578	Taffeta White	○	
NH-623M	Satin Silver Metallic	○	○
NH-636P	Brilliant White Pearl		○
R-81	Milano Red		○
R-507P	Fire Pepper Red Pearl	○	
YR-534M	Desert Silver Metallic	○	○

2003 Model

Vehicle Identification Number

JH4 DC5 3 8 * 3 C 000001

a b c d e f g h

a. Manufacturer, Make and Type of Vehicle
JH4: HONDA MOTOR CO., LTD.
ACURA passenger vehicle

b. Line, Body and Engine Type
DC5: ACURA RSX/K20A2, K20A3

c. Body Type and Transmission Type
3: 2-door Hatchback/5-speed Manual
2-door Hatchback/6-speed Manual
4: 2-door Hatchback/5-speed Automatic

d. Vehicle Grade (Series)

U.S. Model	Canada Model
0: Type S	0: Type S
8: RSX	6: RSX
	8: Premium

e. Check Digit

f. Model Year
3: 2003

g. Factory Code
C: Saitama Factory in Japan
S: Suzuka Factory in Japan

h. Serial Number
U.S.: 000001—
Canada: 800001—

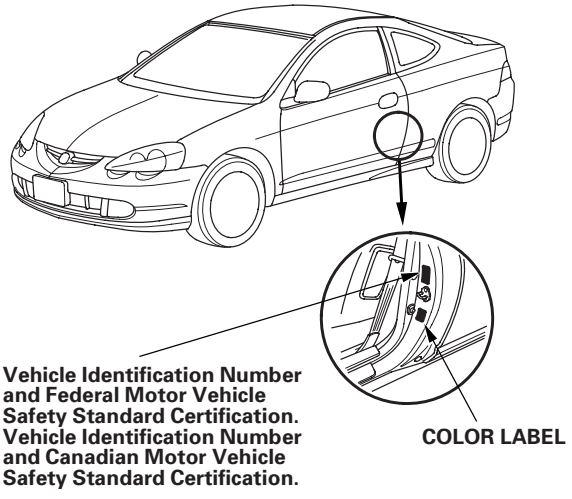

Engine Number

K20A2 - 2400001

a b

a. Engine Type
K20A2: 2.0 L DOHC i-VTEC Sequential Multiport Fuel-injected 200 HP engine
K20A3: 2.0 L DOHC i-VTEC Sequential Multiport Fuel-injected 160 HP engine

b. Serial Number
K20A2: Saitama Factory: 2400001—
Suzuka Factory: 2420001—
K20A3: Saitama Factory: 2100001—
Suzuka Factory: 2120001—

Transmission Number

MRMA - 2000001

a b

a. Transmission Type
MRMA: 5-speed Automatic
W2M5: 5-speed Manual
X2M5: 6-speed Manual

b. Serial Number

Paint Code

Code	Color	U.S.	Canada
B-507P	Arctic Blue Pearl	○	○
B-92P	Nighthawk Black Pearl	○	○
B-96P	Eternal Blue Pearl	○	
NH-578	Taffeta White	○	
NH-623M	Satin Silver Metallic	○	○
NH-624P	Premium White Pearl	○	○
NH-636P	Brilliant White Pearl		○
R-81	Milano Red		○
R-522	Redondo Red Pearl	○	
YR-534M	Desert Silver Metallic	○	○

Chassis and Paint Codes (cont'd)

2004 Model

Vehicle Identification Number

JH4 DC5 3 8 * 4 S 000001

a b c d e f g h

a. Manufacturer, Make and Type of Vehicle
JH4: HONDA MOTOR CO., LTD.
ACURA passenger vehicle
b. Line, Body and Engine Type
DC5: ACURA RSX/K20A2, K20A3
c. Body Type and Transmission Type
3: 2-door Hatchback/5-speed Manual
2-door Hatchback/6-speed Manual
4: 2-door Hatchback/5-speed Automatic
d. Vehicle Grade (Series)

U.S. Model	Canada Model
0: Type S	0: Type S
8: RSX	6: RSX
	8: Premium

e. Check Digit
f. Model Year
4: 2004
g. Factory Code
S: Suzuka Factory in Japan
h. Serial Number
U.S.: 000001—
Canada: 800001—

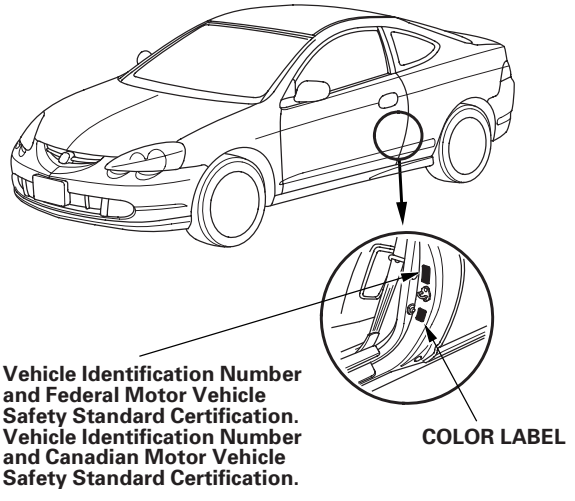

Engine Number

K20A2 - 3300001

a b

a. Engine Type
K20A2: 2.0 L DOHC i-VTEC Sequential Multiport Fuel-injected 200 HP engine
K20A3: 2.0 L DOHC i-VTEC Sequential Multiport Fuel-injected 160 HP engine
b. Serial Number
K20A2: 3300001—
K20A3: 3000001—

Transmission Number

MRMA - 3000001

a b

a. Transmission Type
MRMA: 5-speed Automatic
W2M5: 5-speed Manual
X2M5: 6-speed Manual
b. Serial Number

Paint Code

Code	Color	U.S.	Canada
B-507P	Arctic Blue Pearl	○	○
B-92P	Nighthawk Black Pearl	○	○
B-96P	Eternal Blue Pearl	○	
NH-578	Taffeta White	○	
NH-623M	Satin Silver Metallic	○	○
NH-624P	Premium White Pearl	○	○
NH-636P	Brilliant White Pearl		○
R-81	Milano Red		○
YR-534M	Desert Silver Metallic	○	○

2005 Model

Vehicle Identification Number

JH4 DC5 3 8 * 5 S 000001

a b c d e f g h

a. Manufacturer, Make and Type of Vehicle
JH4: HONDA MOTOR CO., LTD.
ACURA passenger vehicle

b. Line, Body and Engine Type
DC5: ACURA RSX/K20Z1, K20A3

c. Body Type and Transmission Type
3: 2-door Hatchback/5-speed Manual
2-door Hatchback/6-speed Manual
4: 2-door Hatchback/5-speed Automatic

d. Vehicle Grade (Series)

U.S. Model	Canada Model
0: Type S	0: Type S
8: RSX	6: RSX
	8: Premium

e. Check Digit

f. Model Year
5: 2005

g. Factory Code
S: Suzuka Factory in Japan

h. Serial Number
U.S.: 000001—
Canada: 800001—

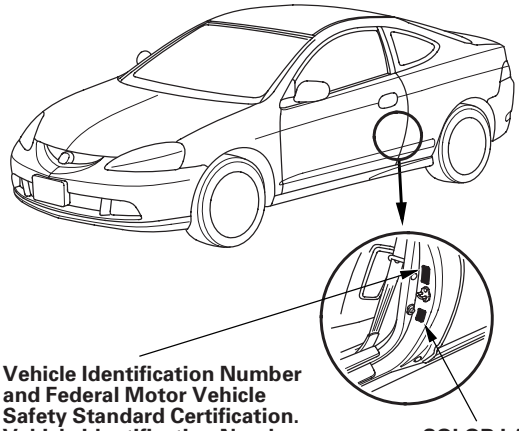

Engine Number

K20Z1 - 1000001

a b

a. Engine Type
K20Z1: 2.0 L DOHC i-VTEC Sequential Multiport Fuel-injected 210 HP engine
K20A3: 2.0 L DOHC i-VTEC Sequential Multiport Fuel-injected 160 HP engine

b. Serial Number
K20Z1: 1000001—
K20A3: 4000001—

Transmission Number

MRMA - 4000001

a b

a. Transmission Type
MRMA: 5-speed Automatic
PTD6: 5-speed Manual
NSN4: 6-speed Manual

b. Serial Number

Paint Code

Code	Color	U.S.	Canada
B-92P	Nighthawk Black Pearl	○	○
B-520P	Vivid Blue Pearl	○	○
NH-578	Taffeta White	○	
NH-623M	Satin Silver Metallic	○	○
NH-624P	Premium White Pearl	○	○
NH-675M	Magnesium Metallic	○	○
G-523M	Jade Green Metallic	○	
R-81	Milano Red	○	
YR-552M	Blaze Orange Metallic	○	○

Chassis and Paint Codes (cont'd)

2006 Model

Vehicle Identification Number

JH4 DC5 3 8 * 6 S 000001

a b c d e f g h

a. Manufacturer, Make and Type of Vehicle
JH4: HONDA MOTOR CO., LTD.
ACURA passenger vehicle

b. Line, Body and Engine Type
DC5: ACURA RSX/K20Z1, K20A3

c. Body Type and Transmission Type
3: 2-door Hatchback/5-speed Manual
2-door Hatchback/6-speed Manual
4: 2-door Hatchback/5-speed Automatic

d. Vehicle Grade (Series)

U.S. Model	Canada Model
0: Type S	0: Type S
8: RSX	6: RSX
	8: Premium

e. Check Digit

f. Model Year
6: 2006

g. Factory Code
S: Suzuka Factory in Japan

h. Serial Number
U.S.: 000001—
Canada: 800001—

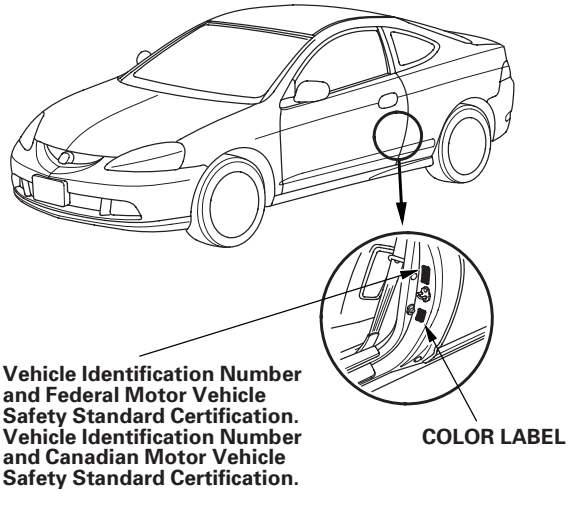

Engine Number

K20Z1 - 2000001

a b

a. Engine Type
K20Z1: 2.0 L DOHC i-VTEC Sequential Multiport Fuel-injected 210 HP engine
K20A3: 2.0 L DOHC i-VTEC Sequential Multiport Fuel-injected 160 HP engine

b. Serial Number
K20Z1: 2000001—
K20A3: 5000001—

Transmission Number

MRMA - 5000001

a b

a. Transmission Type
MRMA: 5-speed Automatic
PTD6: 5-speed Manual
NSN4: 6-speed Manual

b. Serial Number

Paint Code

Code	Color	U.S.	Canada
B-92P	Nighthawk Black Pearl	○	○
B-520P	Vivid Blue Pearl	○	○
NH-578	Taffeta White	○	
NH-624P	Premium White Pearl	○	○
NH-700M	Alabaster Silver Metallic	○	○
NH-675M	Magnesium Metallic	○	○
G-523M	Jade Green Metallic	○	
R-81	Milano Red	○	
YR-552M	Blaze Orange Metallic	○	○

Identification Number Locations

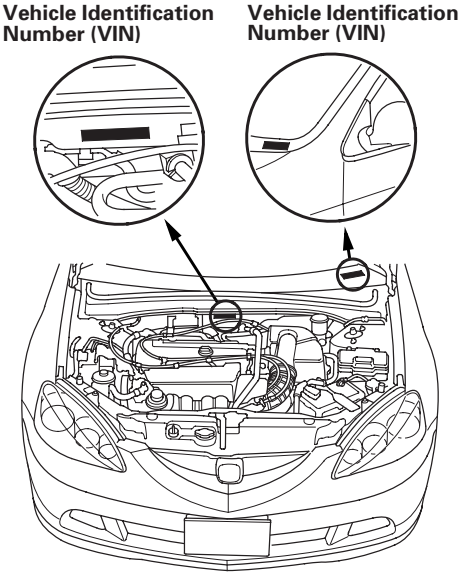

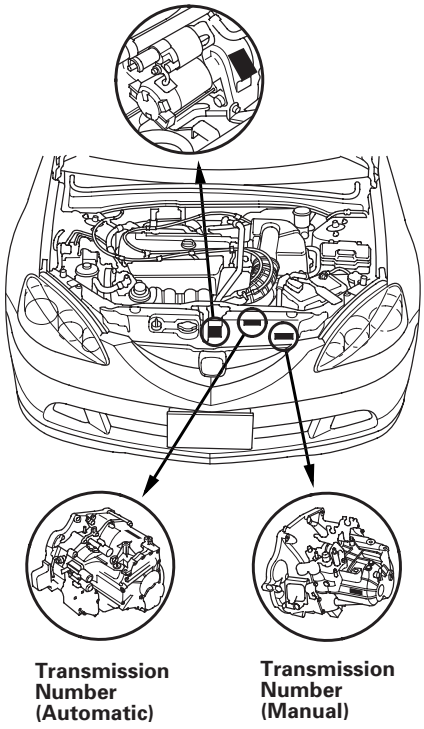

Danger/Warning/Caution Label Locations

NOTE: FRONT PASSENGER AIRBAG WARNING TAG (CHILD SEAT) is equipped on the glove box in the U.S. model.

Passenger's Compartment:

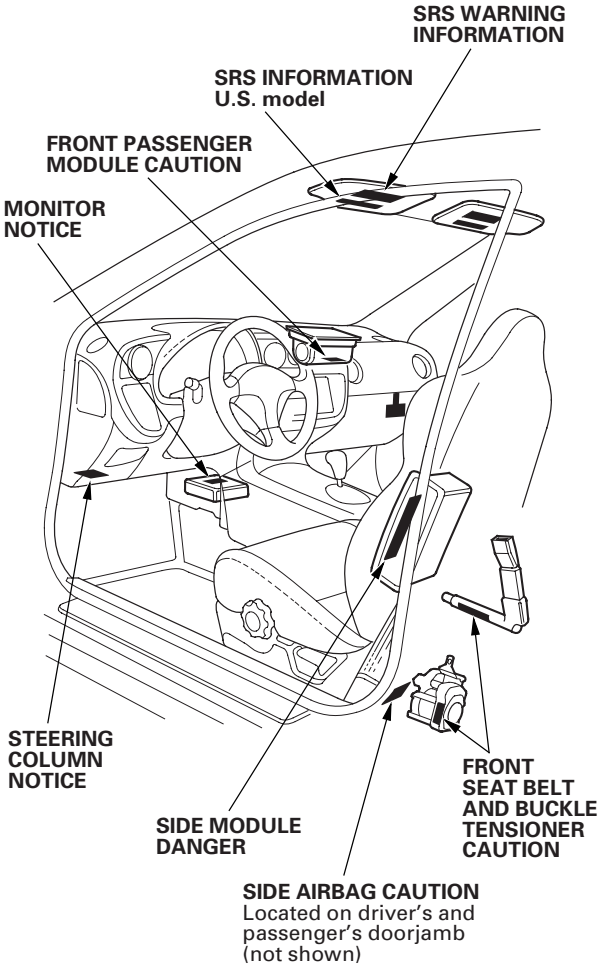

Steering Wheel:

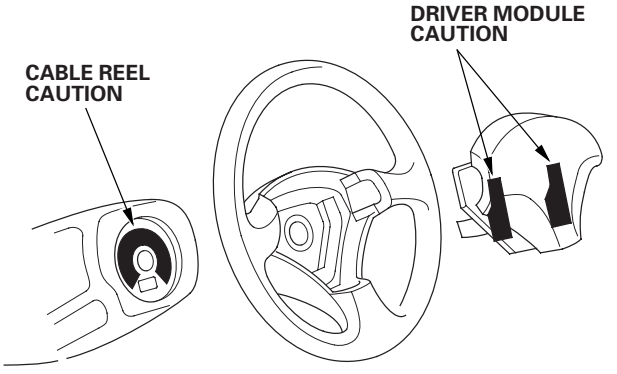

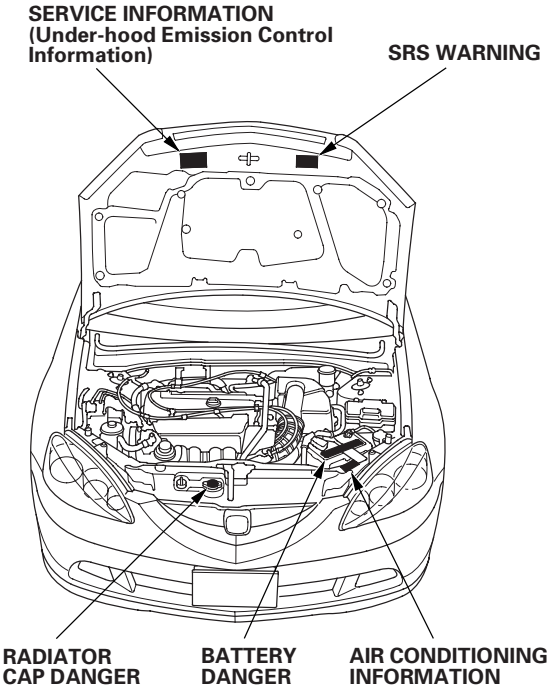
SERVICE INFORMATION
(Under-hood Emission Control
Information)
SRS WARNING
RADIATOR
CAP DANGER
BATTERY
DANGER
AIR CONDITIONING
INFORMATION

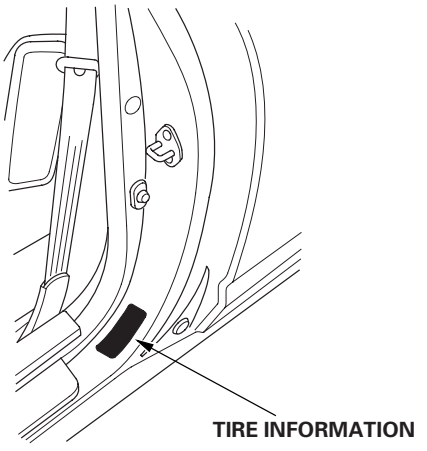
TIRE INFORMATION

Under-hood Emission Control Label

Emission Group Identification

2002-2004 Models

Example:

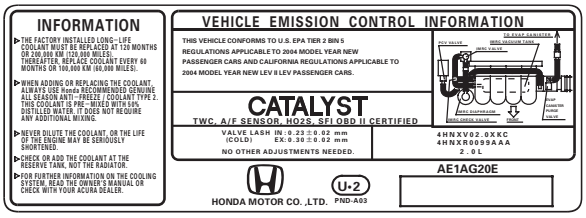

2002 Model:
THIS VEHICLE CONFORMS TO U.S. EPA TIER 2 REGULATIONS APPLICABLE TO 2002 MODEL YEAR NEW BIN 5 PASSENGER CARS AND CALIFORNIA REGULATIONS APPLICABLE TO 2002 MODEL YEAR NEW LEV II LEV PASSENGER CARS.

2003 Model:
THIS VEHICLE CONFORMS TO U.S. EPA TIER 2 REGULATIONS APPLICABLE TO 2003 MODEL YEAR NEW BIN 5 PASSENGER CARS AND CALIFORNIA REGULATIONS APPLICABLE TO 2003 MODEL YEAR NEW LEV II LEV PASSENGER CARS.

2004 Model:
THIS VEHICLE CONFORMS TO U.S. EPA TIER 2 REGULATIONS APPLICABLE TO 2004 MODEL YEAR NEW BIN 5 PASSENGER CARS AND CALIFORNIA REGULATIONS APPLICABLE TO 2004 MODEL YEAR NEW LEV II LEV PASSENGER CARS.

2005-2006 Models

Example:

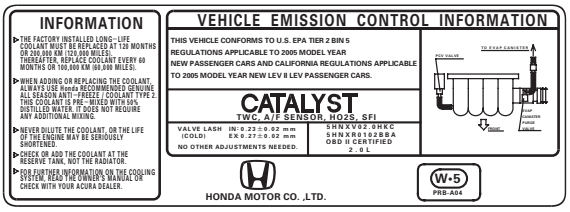

2005 Model: K20Z1 engine
THIS VEHICLE CONFORMS TO U.S. EPA TIER 2 BIN 5 REGULATIONS APPLICABLE TO 2005 MODEL YEAR NEW PASSENGER CARS AND CALIFORNIA REGULATIONS APPLICABLE TO 2005 MODEL YEAR NEW LEV II LEV PASSENGER CARS.

2005 Model: K20A3 engine
THIS VEHICLE CONFORMS TO U.S. EPA TIER 2 BIN 5 AND CFV LEV REGULATIONS APPLICABLE TO 2005 MODEL YEAR NEW PASSENGER CARS AND CALIFORNIA REGULATIONS APPLICABLE TO 2005 MODEL YEAR NEW LEV II LEV PASSENGER CARS. EPA CERTIFICATION TEST FUEL FOR CFV: EPA UNLEADED GASOLINE.

2006 Model:
THIS VEHICLE CONFORMS TO U.S. EPA TIER 2 BIN 5 REGULATIONS APPLICABLE TO 2006 MODEL YEAR NEW PASSENGER CARS AND CALIFORNIA REGULATIONS APPLICABLE TO 2006 MODEL YEAR NEW LEV II LEV PASSENGER CARS.

Test Group and Evaporative Family

Test Group:

6 HNX V 0.20 DKC

a b c d e

a. **Model Year**
   2: 2002
   3: 2003
   4: 2004
   5: 2005
   6: 2006
b. **Manufacturer Subcode**
   HNX: HONDA
c. **Family Type**
   V: LDV
d. **Displacement Group**
   0.20: 2002-2004 Models and 2005-2006 K20Z1 engine Models and 2006 K20A3 engine Model
   0.24: 2005 K20A3 engine Model
e. **Sequence Characters**
   VBP (L·K, L·M), EKC-Type S (L·L, L·N): 2002 Model
   XKC (P5, P6), SKC-Type S (P7, P8): 2003-2004 Models
   HKC: 2005 K20Z1 engine Model
   KBP: 2005 K20A3 engine Model
   DKC: 2006 K20Z1,K20A3 engine Models

Evaporative Family:

6 HNX R 0102 BBA

a b c d e

a. **Model Year**
   2: 2002
   3: 2003
   4: 2004
   5: 2005
   6: 2006
b. **Manufacturer Subcode**
   HNX: HONDA
c. **Family Type**
   R: EVAP/ORVR
d. **Canister Work Capacity**
   0099: 2002-2004 Models
   0102: 2005-2006 Models
e. **Sequence Characters**
   AAH: 2002 Model
   AAA: 2003-2004 Models
   BBA: 2005-2006 Models

Lift and Support Points

NOTE: If you are going to remove heavy components such as suspension or the fuel tank from the rear of the vehicle, first support the front of the vehicle with tall safety stands. When substantial weight is removed from the rear of the vehicle, the center of gravity can change and cause the vehicle to tip forward on the hoist.

Frame Hoist

1. Position the hoist lift blocks (A), on safety stands, under the vehicle's front support points (B) and rear support points (C).

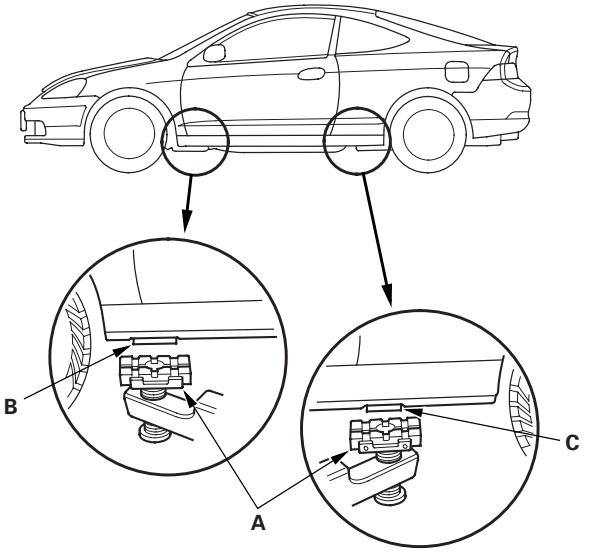

2. Raise the hoist a few inches, and rock the vehicle gently to be sure it is firmly supported.

3. Raise the hoist to full height, and inspect the lift points for solid contact with the lift blocks.

Safety Stands

To support the vehicle on safety stands, use the same support points (B and C) as for a frame hoist. Always use safety stands when working on or under any vehicle that is supported only by a jack.

Floor Jack

1. Set the parking brake.

2. Block the wheels that are not being lifted.

3. When lifting the rear of the vehicle, put the shift lever in reverse, or the automatic transmission in the P position.

4. Position the floor jack under the front jacking bracket (A) or rear jacking bracket (B), center the jacking bracket in the jack lift platform (C), and jack up the vehicle high enough to fit the safety stands under it.

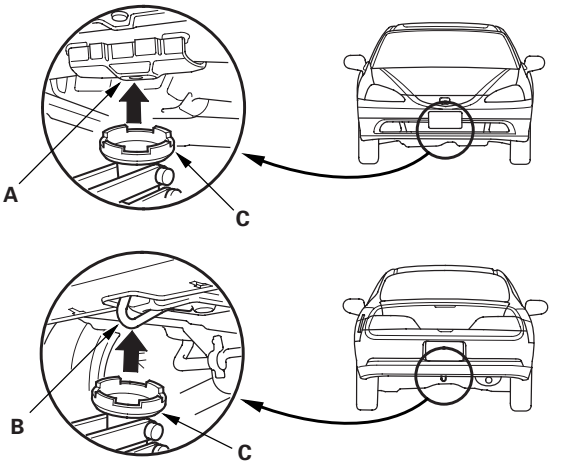

5. Position the safety stands under the support points and adjust them so the vehicle is level.

6. Lower the vehicle onto the stands.

Towing

If the vehicle needs to be towed, call a professional towing service. Never tow the vehicle behind another vehicle with just a rope or chain. It is very dangerous.

Emergency Towing
There are three popular methods of towing a vehicle.

Flat-bed Equipment — The operator loads the vehicle on the back of a truck. This is the best way of transporting the vehicle.

To accommodate flat-bed equipment, the vehicle is equipped with towing hooks (A) and tie down hooks (B).

The towing hook can be used with a winch to pull the vehicle onto the truck, and the tie down hook slots can be used to secure the vehicle to the truck.

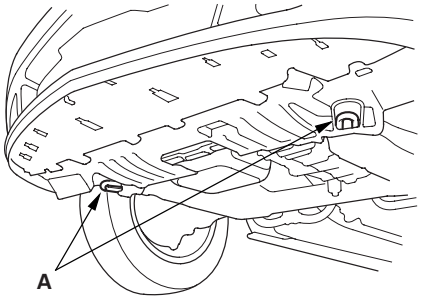

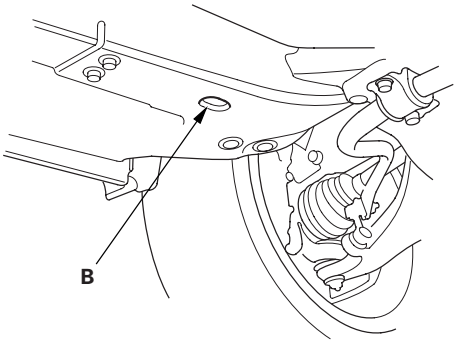

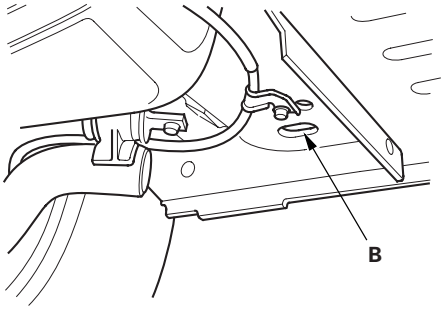

Wheel Lift Equipment — The tow truck uses two pivoting arms that go under the tires (front or rear) and lifts them off the ground. The other two wheels remain on the ground. This is an acceptable way of towing the vehicle.

Sling-type Equipment — The tow truck uses metal cables with hooks on the ends. These hooks go around parts of the frame or suspension and the cables lift that end of the vehicle off the ground. The vehicle's suspension and body can be seriously damaged if this method of towing is attempted.

If the vehicle cannot be transported by flat-bed, it should be towed with the front wheels off the ground. If due to damage, the vehicle must be towed with the front wheels on the ground, do the following:

Manual Transmission
- Release the parking brake.
- Shift the transmission to Neutral.

Automatic Transmission
- Release the parking brake.
- Start the engine.
- Shift to the D position, then to the N position.
- Turn off the engine.

It is best to tow the vehicle no farther than 50 miles (80 km), and keep the speed below 35 mph (55 km/h).

NOTICE
- Improper towing preparation will damage the transmission. Follow the above procedure exactly. If you cannot shift the transmission or start the engine (automatic transmission), the vehicle must be transported on a flat-bed.
- Trying to lift or tow the vehicle by the bumpers will cause serious damage. The bumpers are not designed to support the vehicle's weight.

Parts Marking

To deter vehicle theft, certain major components are marked with the vehicle identification number (VIN). Original parts have self-adhesive labels. Replacement body parts have generic self-adhesive labels. These labels should not be removed. The original engine or transmission VIN plates are not transferable to the replacement engine or transmission.

NOTE: Be careful not to damage the parts marking labels during body repair. Mask the labels before repairing the part.

Standards and Service Limits

Engine Electrical

Item	Measurement	Qualification	Standard or New	Service Limit
Ignition coil	Rated voltage		12 V	
	Firing order		1—3—4—2	
Spark plug	Type	K20A3 engine	NGK: IZFR6K11 DENSO: SKJ20DR-M11	
		K20A2 engine (2002-2004 models)	NGK: IFR7G11K, IFR7G11KS DENSO: SK22PR-M11, SK22PR-M11S	
		K20Z1 engine (2005-2006 models)	NGK: IFR7G11KS DENSO: SK22PR-M11S	
	Gap		1.0—1.1 mm (0.039—0.043 in.)	1.3 mm (0.051 in.)
Ignition timing	At idle Check the *red* mark	M/T (in neutral)	8°±2° BTDC	
		A/T (in N or P position)	8°±2° BTDC	
Drive belt	Tension		Auto tensioner	
Alternator (K20A3 engine)	Output	At 13.5 V and normal engine temperature	90 A	
	Coil (rotor) resistance	At 68°F (20°C)	1.84 —2.10 Ω	
	Slip ring O.D.		22.7 mm (0.89 in.)	21.7 mm (0.85 in.)
	Brush length		15.5 mm (0.61 in.)	1.5 mm (0.06 in.)
	Brush spring tension		3.3—4.1 N (0.34—0.42 kgf, 0.7—0.9 lbf)	
Alternator [K20A2 (2002-2004 models), K20Z1 (2005-2006 models) engines]	Output	At 13.5 V and normal engine temperature	95 A	
	Coil (rotor) resistance	At 68°F (20°C)	2.2 —3.0 Ω	
	Slip ring O.D.		14.4 mm (0.57 in.)	14.0 mm (0.55 in.)
	Brush length		10.5 mm (0.41 in.)	1.5 mm (0.06 in.)
	Brush spring tension		2.9—3.5 N (0.30—0.36 kgf, 0.7—0.8 lbf)	
Starter (K20A3 engine)	Output		1.2 kW	
	Commutator mica depth		0.40—0.50 mm (0.016—0.020 in.)	0.15 mm (0.006 in.)
	Commutator runout		0.02 mm (0.001 in.) max.	0.05 mm (0.002 in.)
	Commutator O.D.		28.0—28.1 mm (1.102—1.106 in.)	27.5 mm (1.083 in.)
	Brush length		11.1—11.5 mm (0.44—0.45 in.)	4.3 mm (0.17 in.)
Starter [K20A2 (2002-2004 models), K20Z1 (2005-2006 models) engines]	Output		1.1 kW	
	Commutator mica depth		0.50—0.80 mm (0.020—0.031 in.)	0.20 mm (0.008 in.)
	Commutator runout		0.02 mm (0.001 in.) max.	0.05 mm (0.002 in.)
	Commutator O.D.		28.0 mm (1.10 in.)	27.0 mm (1.06 in.)
	Brush length		14.0—14.5 mm (0.55—0.57 in.)	9.0 mm (0.35 in.)
	Brush spring tension		13.7—17.7 N (1.40—1.80 kgf, 3.09—3.97 lbf)	

Engine Assembly

Item	Measurement	Qualification	Standard or New	Service Limit
Compression	Pressure	Minimum	930 kPa (9.5 kgf/cm^2, 135 psi)	———
	Check the engine with the starter cranking	Maximum variation	200 kPa (2.0 kgf/cm^2, 28 psi)	———

Cylinder Head

Item	Measurement	Qualification	Standard or New	Service Limit
Head	Warpage		———	0.05 mm (0.002 in.)
	Height		103.95—104.05 mm (4.093—4.096 in.)	———
Camshaft	End play		0.05—0.20 mm (0.002—0.008 in.)	0.4 mm (0.02 in.)
	Camshaft-to-holder oil clearance	No. 1 journal	0.030—0.069 mm (0.001—0.003 in.)	0.15 mm (0.006 in.)
		No. 2, 3, 4, 5 journals	0.060—0.099 mm (0.002—0.004 in.)	0.15 mm (0.006 in.)
	Total runout		0.03 mm (0.001 in.) max.	0.04 mm (0.002 in.)
	Cam lobe height (K20A3 engine)	Intake, primary	33.925 mm (1.3356 in.)	———
		Intake, secondary	29.638 mm (1.1668 in.)	———
		Exhaust	34.092 mm (1.3422 in.)	———
	Cam lobe height ［K20A2 (2002-2004 models), K20Z1 (2005-2006 models) engines］	Intake, primary	32.791 mm (1.2910 in.)	———
		Intake, mid	35.534 mm (1.3990 in.)	———
		Intake, secondary	32.678 mm (1.2865 in.)	———
		Exhaust, primary	32.772 mm (1.2902 in.)	———
		Exhaust, mid	34.768 mm (1.3688 in.)	———
		Exhaust, secondary	32.661 mm (1.2859 in.)	———

(cont'd)

Standards and Service Limits

Cylinder Head (cont'd)

Item	Measurement	Qualification	Standard or New	Service Limit
Valve	Clearance (cold)	Intake	0.21—0.25 mm (0.008—0.010 in.)	———
		Exhaust (K20A3 engine)	0.28—0.32 mm (0.011—0.013 in.)	———
		Exhaust [K20A2 (2002-2004 models), K20Z1 (2005-2006 models) engines]	0.25—0.29 mm (0.010—0.011 in.)	———
	Stem O.D.	Intake	5.475—5.485 mm (0.2156—0.2159 in.)	5.445 mm (0.214 in.)
		Exhaust	5.450—5.460 mm (0.2146—0.2150 in.)	5.42 mm (0.213 in.)
	Stem-to-guide clearance	Intake	0.030—0.055 mm (0.0012—0.0022 in.)	0.08 mm (0.003 in.)
		Exhaust	0.055—0.080 mm (0.0022—0.0031 in.)	0.11 mm (0.004 in.)
Valve seat	Width	Intake	1.25—1.55 mm (0.049—0.061 in.)	2.00 mm (0.079 in.)
		Exhaust	1.25—1.55 mm (0.049—0.061 in.)	2.00 mm (0.079 in.)
	Stem installed height	Intake	44.0—44.5 mm (1.73—1.75 in.)	44.7 mm (1.76 in.)
		Exhaust	44.1—44.6 mm (1.74—1.76 in.)	44.8 mm (1.76 in.)
Valve spring	Free length (K20A3 engine)	Intake	47.61 mm (1.874 in.)	———
		Exhaust	NIPPON HATSUJO: 49.64 mm (1.954 in.) CHUO HATSUJO: 49.63 mm (1.954 in.)	———
	Free length [K20A2 (2002 model) engine]	Intake, inner	45.22 mm (1.780 in.)	———
		Exhaust, inner	45.50 mm (1.791 in.)	———
		Intake, outer	50.86 mm (2.002 in.)	———
		Exhaust, outer	51.81 mm (2.040 in.)	———
	Free length [K20A2 (2003-2004 models), K20Z1 (2005-2006 models) engines]	Intake	49.77 mm (1.959 in.)	———
		Exhaust	50.39 mm (1.984 in.)	———
Valve guide	I.D.	Intake	5.515—5.530 mm (0.2171—0.2177 in.)	5.55 mm (0.219 in.)
		Exhaust	5.515—5.530 mm (0.2171—0.2177 in.)	5.55 mm (0.219 in.)
	Installed height	Intake	15.2—16.2 mm (0.598—0.638 in.)	———
		Exhaust	15.5—16.5 mm (0.610—0.650 in.)	———
Rocker arm	Arm-to-shaft clearance	Intake	0.025—0.052 mm (0.0010—0.0020 in.)	0.08 mm (0.003 in.)
		Exhaust (K20A3 engine)	0.018—0.056 mm (0.0007—0.0022 in.)	0.08 mm (0.003 in.)
		Exhaust [K20A2 (2002-2004 models), K20Z1 (2005-2006 models) engines]	0.025—0.052 mm (0.0010—0.0020 in.)	0.08 mm (0.003 in.)

Engine Block

Item	Measurement	Qualification	Standard or New	Service Limit
Block	Warpage of deck		0.07 mm (0.003 in.) max.	0.10 mm (0.004 in.)
	Bore diameter	A or I	86.010—86.020 mm (3.3862—3.3866 in.)	86.070 mm (3.3886 in.)
		B or II	86.000—86.010 mm (3.3858—3.3862 in.)	86.070 mm (3.3886 in.)
	Bore taper		———	0.05 mm (0.002 in.)
	Reboring limit		———	0.25 mm (0.01 in.)
Piston	Skirt O.D. at 11 mm (0.4 in.) from bottom of skirt	No letter or A	85.980—85.990 mm (3.3850—3.3854 in.)	85.930 mm (3.3831 in.)
		Letter B	85.970—85.980 mm (3.3846—3.3850 in.)	85.920 mm (3.3827 in.)
	Clearance in cylinder		0.020—0.040 mm (0.0008—0.0016 in.)	0.05 mm (0.002 in.)
	Ring groove width	Top (K20A3 engine)	1.220—1.230 mm (0.0481—0.0484 in.)	1.25 mm (0.049 in.)
		Top [K20A2 (2002-2004 models), K20Z1 (2005-2006 models) engines]	1.235—1.245 mm (0.0486—0.0490 in.)	1.265 mm (0.0498 in.)
		Second (K20A3 engine)	1.220—1.230 mm (0.0481—0.0484 in.)	1.25 mm (0.049 in.)
		Second [K20A2 (2002-2004 models), K20Z1 (2005-2006 models) engines]	1.230—1.240 mm (0.0484—0.0488 in.)	1.260 mm (0.0496 in.)
		Oil	2.005—2.025 mm (0.0789—0.0797 in.)	2.05 mm (0.081 in.)

(cont'd)

Standards and Service Limits

Engine Block (cont'd)

Item	Measurement	Qualification	Standard or New	Service Limit
Piston ring	Ring-to-groove clearance	Top (K20A3 engine)	0.035—0.060 mm (0.0014—0.0024 in.)	0.13 mm (0.005 in.)
		Top [K20A2 (2002-2004 models), K20Z1 (2005-2006 models) engines]	0.040—0.065 mm (0.0016—0.0026 in.)	0.13 mm (0.005 in.)
		Second (K20A3 engine)	0.030—0.055 mm (0.0012—0.0022 in.)	0.13 mm (0.005 in.)
		Second [K20A2 (2002-2004 models), K20Z1 (2005-2006 models) engines]	0.045—0.070 mm (0.0018—0.0028 in.)	0.13 mm (0.005 in.)
	Ring end gap	Top	0.20—0.35 mm (0.008—0.014 in.)	0.60 mm (0.024 in.)
		Second (K20A3 engine)	0.40—0.55 mm (0.016—0.022 in.)	0.70 mm (0.028 in.)
		Second [K20A2 (2002-2004 models), K20Z1 (2005-2006 models) engines]	0.50—0.65 mm (0.020—0.026 in.)	0.75 mm (0.030 in.)
		Oil (K20A3 engine)	0.25—0.65 mm (0.010—0.026 in.)	0.75 mm (0.030 in.)
		Oil [K20A2 (2002-2004 models), K20Z1 (2005-2006 models) engines]	0.20—0.70 mm (0.008—0.028 in.)	0.80 mm (0.031 in.)
Piston pin	O.D.		21.961—21.965 mm (0.8646—0.8648 in.)	21.953 mm (0.8643 in.)
	Pin-to-piston clearance		—0.005 to +0.002 mm (—0.00020 to +0.00008 in.)	0.005 mm (0.0002 in.)
Connecting rod	Pin-to-rod clearance		0.005—0.015 mm (0.0002—0.0006 in.)	0.02 mm (0.0008 in.)
	Small-end bore diameter		21.970—21.976 mm (0.8650—0.8652 in.)	———
	Large-end bore diameter	K20A3 engine	48.0 mm (1.89 in.)	———
		K20A2 (2002-2004 models), K20Z1 (2005-2006 models) engines	51.0 mm (2.01 in.)	———
	End play		0.15—0.30 mm (0.006—0.012 in.)	0.40 mm (0.016 in.)

Item	Measurement	Qualification	Standard or New	Service Limit
Crankshaft	Main journal diameter	No. 1 journal No. 2 journal No. 4 journal No. 5 journal (K20A3 engine)	54.984—55.008 mm (2.1648—2.1657 in.)	———
		No. 1 journal No. 2 journal No. 4 journal No. 5 journal ［K20A2 (2002-2004 models), K20Z1 (2005-2006 models) engines］	54.980—55.004 mm (2.1646—2.1655 in.)	———
		No. 3 journal (K20A3 engine)	54.976—55.000 mm (2.1644—2.1654 in.)	———
		No. 3 journal ［K20A2 (2002-2004 models), K20Z1 (2005-2006 models) engines］	54.974—54.996 mm (2.1644—2.1652 in.)	———
	Rod journal diameter	K20A3 engine	44.976—45.000 mm (1.7707—1.7717 in.)	———
		K20A2 (2002-2004 models), K20Z1 (2005-2006 models) engines	47.976—48.000 mm (1.8888—1.8898 in.)	———
	Rod/main journal taper		0.005 mm (0.0002 in.)	0.010 mm (0.0004 in.)
	Rod/main journal out-of-round		0.005 mm (0.0002 in.)	0.010 mm (0.0004 in.)
	End play		0.10—0.35 mm (0.004—0.014 in.)	0.45 mm (0.018 in.)
	Runout	K20A3 engine	0.03 mm (0.0012 in.) max.	0.04 mm (0.0016 in.)
		K20A2 (2002-2004 models), K20Z1 (2005-2006 models) engines	0.02 mm (0.0008 in.) max.	0.03 mm (0.0012 in.)
Crankshaft bearing	Main bearing-to-journal oil clearance	No. 1 journal No. 2 journal No. 4 journal No. 5 journal	0.017—0.041 mm (0.0007—0.0016 in.)	0.050 mm (0.0020 in.)
		No. 3 journal	0.025—0.049 mm (0.0010—0.0019 in.)	0.055 mm (0.0022 in.)
	Rod bearing clearance	K20A3 engine	0.020—0.050 mm (0.0008—0.0020 in.)	0.060 mm (0.0024 in.)
		K20A2 (2002-2004 models), K20Z1 (2005-2006 models) engines	0.033—0.061 mm (0.0013—0.0024 in.)	0.072 mm (0.0028 in.)

Standards and Service Limits

Engine Lubrication

Item	Measurement	Qualification	Standard or New	Service Limit
Engine oil	Capacity (K20A3 engine)	Engine overhaul	5.3 L (5.6 US qt)	
		Engine, including filter	4.2 L (4.4 US qt)	
		Oil change, without filter	4.0 L (4.2 US qt)	
	Capacity ［K20A2 (2002-2004 models), K20Z1 (2005-2006 models) engines］	Engine overhaul	5.8 L (6.1 US qt)	
		Engine, including filter	4.7 L (5.0 US qt)	
		Oil change, without filter	4.5 L (4.8 US qt)	
Oil pump	Inner-to-outer rotor clearance		0.02—0.15 mm (0.001—0.006 in.)	0.20 mm (0.008 in.)
	Pump housing-to-outer rotor clearance		0.15—0.21 mm (0.006—0.008 in.)	0.23 mm (0.009 in.)
	Pump housing-to-rotor axial clearance		0.02—0.07 mm (0.001—0.003 in.)	0.12 mm (0.005 in.)
	Relief valve, oil pressure with oil temperature at 176 ℉ (80 ℃)	At idle	70 kPa (0.7 kgf/cm^2, 10 psi) min.	
		At 3,000 rpm	300 kPa (3.1 kgf/cm^2, 44 psi) min.	

Cooling

Item	Measurement	Qualification	Standard or New
Radiator	Coolant capacities (Includes engine, heater, hoses, and reservoir) Use ACURA Long Life Antifreeze/ Coolant Type 2	M/T: engine overhaul	6.4 L (1.69 US gal)
		M/T: coolant change	5.1 L (1.35 US gal)
		A/T: engine overhaul	6.3 L (1.66 US gal)
		A/T: coolant change	5.0 L (1.32 US gal)
Reservoir	Coolant capacity		0.5 L (0.13 US gal)
Radiator cap	Opening pressure		93—123 kPa (0.95—1.25 kgf/cm^2, 14—18 psi)
Thermostat	Opening temperature	Begins to open	169—176 ℉ (76—80 ℃)
		Fully open	194 ℉ (90 ℃)
	Valve lift at fully open		8.0 mm (0.31 in.) min.
Radiator fan switch	Thermoswitch ''ON'' temperature		196—203 ℉ (91—95 ℃)
	Thermoswitch ''OFF'' temperature		Subtract 5—15 ℉ (3—8 ℃) from actual ''ON'' temperature

Fuel and Emissions

Item	Measurement	Qualification	Standard or New
Fuel pressure regulator	Pressure with fuel pressure gauge connected		320—370 kPa (3.3—3.8 kgf/cm^2, 47—54 psi)
Fuel tank	Capacity		50 L (13.2 US gal)
Engine idle	Idle speed without load	K20A2 engine (2002-2004 models) in neutral	700±50 rpm
		K20A3 engine (M/T) in neutral	700±50 rpm
		K20A3 engine (A/T) in N or P position	700±50 rpm
		K20Z1 engine (2005-2006 models) in neutral	800±50 rpm
	Idle speed with high electric load (A/C switch ON, temperature set to Max Cool, blower fan on High, rear window defogger ON (if applicable, and headlights on high beam)	K20A2 engine (2002-2004 models) in neutral	780±50 rpm
		K20A3 engine (2002-2004 models) (M/T) in neutral	720±50 rpm
		K20A3 engine (2002-2004 models) (A/T) in N or P position	720±50 rpm
		K20A3 engine (2005-2006 models) (M/T) in neutral	700±50 rpm
		K20A3 engine (2005-2006 models) (A/T) in N or P position	700±50 rpm
		K20Z1 engine (2005-2006 models) in neutral	850±50 rpm

Clutch

Item	Measurement	Qualification	Standard or New	Service Limit
Clutch pedal	Height from the floor		197 mm (7.76 in.)	———
	Stroke		130—140 mm (5.12—5.51 in.)	———
	Play		10—16 mm (0.39—0.63 in.)	———
	Disengagement height from the floor		115 mm (4.53 in.) min.	———
Flywheel	Runout on clutch mating surface		0.05 mm (0.002 in.) max.	0.15 mm (0.006 in.)
Clutch disc	Rivet head depth		1.65—2.25 mm (0.065—0.089 in.) min.	0.7 mm (0.03 in.)
	Thickness		8.3—8.9 mm (0.33—0.35 in.)	6.0 mm (0.24 in.)
Pressure plate	Warpage		0.03 mm (0.001 in.) max.	0.15 mm (0.006 in.)
	Height if diaphragm spring fingers	Measured with special tool and feeler gauge	0.6 mm (0.02 in.) max.	0.8 mm (0.03 in.)

Standards and Service Limits

Manual Transmission and M/T Differential (5-speed)

Item	Measurement	Qualification	Standard or New	Service Limit
Transmission fluid	Capacity	Fluid change	1.5 L (1.6 US qt)	
	Use Acura MTF	Overhaul	1.7 L (1.8 US qt)	
Mainshaft	End play		0.11—0.17 mm (0.004—0.007 in.)	Adjust
	Diameter of bushing surface		20.80—20.85 mm (0.819—0.821 in.)	20.75 mm (0.817 in.)
	Diameter of distance collar		31.984—32.000 mm (1.2594—1.2598 in.)	31.93 mm (1.257 in.)
	Diameter of ball bearing contact area (clutch housing side)		27.977—27.990 mm (1.1015—1.1020 in.)	27.92 mm (1.099 in.)
	Diameter of needle bearing contact area		38.984—39.000 mm (1.5348—1.5354 in.)	38.93 mm (1.533 in.)
	Diameter of ball bearing contact area (transmission housing side)		27.987—28.000 mm (1.1019—1.1024 in.)	27.93 mm (1.100 in.)
	Runout		0.02 mm (0.001 in.) max.	0.05 mm (0.002 in.)
Mainshaft 3rd, 4th, and 5th gear	I.D.		44.009—44.025 mm (1.7326—1.7333 in.)	44.08 mm (1.735 in.)
	End play		0.06—0.16 mm (0.002—0.006 in.)	0.25 mm (0.010 in.)
	Thickness		23.92—23.97 mm (0.941—0.944 in.)	23.80 mm (0.937 in.)
Countershaft	Diameter of needle bearing contact area (clutch housing side)		40.000—40.015 mm (1.5748—1.5754 in.)	39.95 mm (1.5723 in.)
	Diameter of distance collar contact area		39.937—39.950 mm (1.5723—1.5728 in.)	39.883 mm (1.5702 in.)
	Diameter of ball bearing contact area (transmission housing side)		30.020—30.033 mm (1.1819—1.1824 in.)	29.97 mm (1.180 in.)
	Runout		0.02 mm (0.001 in.) max.	0.05 mm (0.002 in.)
	35 mm shim-to-bearing inner race clearance		0.04—0.10 mm (0.0016—0.0039 in.)	Adjust
Countershaft 1st gear	I.D.		52.010—52.029 mm (2.0476—2.0484 in.)	52.08 mm (2.050 in.)
	End play		0.06—0.16 mm (0.002—0.006 in.)	0.25 mm (0.010 in.)
	Thickness		22.92—22.97 mm (0.902—0.904 in.)	22.87 mm (0.900 in.)
Countershaft 2nd gear	I.D.		52.010—52.029 mm (2.0476—2.0484 in.)	52.08 mm (2.050 in.)
	End play		0.06—0.16 mm (0.002—0.006 in.)	0.25 mm (0.010 in.)
	Thickness		27.92—27.97 mm (1.099—1.101 in.)	27.87 mm (1.097 in.)
Countershaft 1st gear distance collar	I.D.		39.95—39.96 mm (1.5728—1.5732 in.)	39.97 mm (1.574 in.)
	O.D.		46.989—47.000 mm (1.8499—1.8504 in.)	46.94 mm (1.848 in.)
	Length		23.03—23.08 mm (0.907—0.909 in.)	———
Countershaft 2nd gear distance collar	I.D.		39.95—39.96 mm (1.5728—1.5732 in.)	39.97 mm (1.574 in.)
	O.D.		46.989—47.000 mm (1.8499—1.8504 in.)	46.94 mm (1.848 in.)
	Length		28.03—28.08 mm (1.104—1.106 in.)	———

Item	Measurement	Qualification	Standard or New	Service Limit
Mainshaft 4th and 5th gears distance collar	I.D.		32.00—32.01 mm (1.2598—1.2602 in.)	32.02 mm (1.261 in.)
	O.D.		38.989—39.000 mm (1.5350—1.5354 in.)	38.94 mm (1.533 in.)
	Length 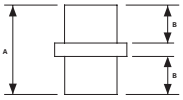	A	51.95—52.05 mm (2.045—2.049 in.)	———
		B	24.03—24.08 mm (0.946—0.948 in.)	———
MBS distance collar	I.D.		28.00—28.01 mm (1.102—1.103 in.)	28.02 mm (1.103 in.)
	Length		23.95—24.05 mm (0.943—0.947 in.)	———
Reverse idler gear	I.D.		20.016—20.043 mm (0.7880—0.7891 in.)	20.90 mm (0.832 in.)
	Gear-to-reverse gear shaft clearance		0.036—0.084 mm (0.0014—0.0033 in.)	0.16 mm (0.006 in.)
Synchro ring	Ring-to-gear clearance	Ring pushed against gear	0.70—1.49 mm (0.028—0.059 in.)	0.4 mm (0.016 in.)
Triple cone synchro	Outer synchro ring-to-synchro cone clearance	Ring pushed against gear	0.70—1.19 mm (0.028—0.047 in.)	0.3 mm (0.012 in.)
	Synchro cone-to-gear clearance	Ring pushed against gear	0.50—1.04 mm (0.020—0.041 in.)	0.3 mm (0.012 in.)
	Outer synchro ring-to-gear cone clearance	Ring pushed against gear	0.95—1.68 mm (0.037—0.066 in.)	0.6 mm (0.024 in.)
Shift fork	Finger thickness		7.4—7.6 mm (0.29—0.30 in.)	———
	Fork-to-synchro sleeve clearance		0.35—0.65 mm (0.014—0.026 in.)	1.0 mm (0.039 in.)
Reverse shift fork	Finger thickness		13.4—13.7 mm (0.527—0.539 in.)	———
	Fork-to-reverse idler gear clearance		0.20—0.59 mm (0.007—0.024 in.)	1.3 mm (0.051 in.)
Shift arm	I.D.		13.973—14.000 mm (0.5501—0.5512 in.)	———
	Shift fork diameter at contact area		16.9—17.0 mm (0.665—0.669 in.)	———
	Shift arm-to-shift lever clearance		0.2—0.5 mm (0.007—0.020 in.)	0.62 mm (0.024 in.)
Select lever	Finger width		14.85—14.95 mm (0.585—0.589 in.)	———
Change lever	Shaft-to-select lever clearance		0.05—0.25 mm (0.002—0.010 in.)	0.50 mm (0.020 in.)
	Groove (to select lever)		15.00—15.10 mm (0.591—0.594 in.)	———
	Shaft-to-shift arm clearance		0.013—0.070 mm (0.0005—0.0028 in.)	0.1 mm (0.004 in.)
M/T differential carrier	Pinion shaft contact area I.D.		18.010—18.028 mm (0.7091—0.7098 in.)	———
	Carrier-to-pinion shaft clearance		0.027—0.057 mm (0.0011—0.0022 in.)	0.1 mm (0.004 in.)
	Driveshaft contact area I.D.		28.025—28.045 mm (1.1033—1.1041 in.)	———
M/T differential pinion gear	Backlash		0.05—0.15 mm (0.002—0.006 in.)	———
	I.D.		18.042—18.066 mm (0.7103—0.7113 in.)	———
	Pinion gear-to-pinion shaft clearance		0.059—0.095 mm (0.0023—0.0037 in.)	0.15 mm (0.006 in.)
80 mm shim	80 mm shim-to-bearing outer race clearance in transmission housing		0—0.10 mm (0—0.0039 in.)	Adjust

Standards and Service Limits

Manual Transmission and M/T Differential (6-speed)

Item	Measurement	Qualification	Standard or New	Service Limit
Transmission fluid	Capacity	Fluid change	1.5 L (1.6 US qt)	
	Use Acura MTF	Overhaul	1.7 L (1.8 US qt)	
Mainshaft	End play		0.11—0.17 mm (0.004—0.007 in.)	Adjust
	Diameter of bushing surface		20.80—20.85 mm (0.819—0.821 in.)	20.75 mm (0.817 in.)
	Diameter of distance collar		31.984—32.000 mm (1.2594—1.2598 in.)	31.93 mm (1.257 in.)
	Diameter of ball bearing contact area (clutch housing side)		27.977—27.990 mm (1.1015—1.1020 in.)	27.92 mm (1.099 in.)
	Diameter of needle bearing contact area		38.984—39.000 mm (1.5348—1.5354 in.)	38.93 mm (1.533 in.)
	Diameter of ball bearing contact area (transmission housing side)		27.987—28.000 mm (1.1019—1.1024 in.)	27.93 mm (1.100 in.)
	Runout		0.02 mm (0.001 in.) max.	0.05 mm (0.002 in.)
Mainshaft 3rd, 4th, and 5th gear	I.D.		44.009—44.025 mm (1.7326—1.7333 in.)	44.08 mm (1.735 in.)
	End play		0.06—0.16 mm (0.002—0.006 in.)	0.25 mm (0.010 in.)
	Thickness		23.92—23.97 mm (0.941—0.944 in.)	23.80 mm (0.937 in.)
Mainshaft 6th gear	I.D.		40.009—40.025 mm (1.5752—1.5758 in.)	40.08 mm (1.578 in.)
	End play		0.06—0.16 mm (0.002—0.006 in.)	0.25 mm (0.010 in.)
	Thickness		23.92—23.97 mm (0.941—0.944 in.)	23.80 mm (0.937 in.)
Countershaft	Diameter of needle bearing contact area (clutch housing side)		35.000—35.015 mm (1.3780—1.3785 in.)	34.95 mm (1.3760 in.)
	Diameter of distance collar contact area		39.937—39.950 mm (1.5723—1.5728 in.)	39.883 mm (1.5702 in.)
	Diameter of ball bearing contact area (transmission housing side)		30.020—30.033 mm (1.1819—1.1824 in.)	29.97 mm (1.180 in.)
	Runout		0.02 mm (0.001 in.) max.	0.05 mm (0.002 in.)
	35 mm shim-to-bearing inner race clearance		0.04—0.10 mm (0.0016—0.0039 in.)	Adjust
Countershaft 1st gear	I.D.		52.010—52.029 mm (2.0476—2.0484 in.)	52.08 mm (2.050 in.)
	End play		0.06—0.16 mm (0.002—0.006 in.)	0.25 mm (0.010 in.)
	Thickness		22.92—22.97 mm (0.902—0.904 in.)	22.87 mm (0.900 in.)
Countershaft 2nd gear	I.D.		52.010—52.029 mm (2.0476—2.0484 in.)	52.08 mm (2.050 in.)
	End play		0.06—0.16 mm (0.002—0.006 in.)	0.25 mm (0.010 in.)
	Thickness		27.92—27.97 mm (1.099—1.101 in.)	27.87 mm (1.097 in.)
Countershaft 1st gear distance collar	I.D.		39.95—39.96 mm (1.5728—1.5732 in.)	39.97 mm (1.574 in.)
	O.D.		46.989—47.000 mm (1.8499—1.8504 in.)	46.94 mm (1.848 in.)
	Length		23.03—23.08 mm (0.907—0.909 in.)	———
Countershaft 2nd gear distance collar	I.D.		39.95—39.96 mm (1.5728—1.5732 in.)	39.97 mm (1.574 in.)
	O.D.		46.989—47.000 mm (1.8499—1.8504 in.)	46.94 mm (1.848 in.)
	Length		28.03—28.08 mm (1.104—1.106 in.)	———

Item	Measurement	Qualification	Standard or New	Service Limit
Mainshaft 4th and 5th gears distance collar	I.D.		32.00—32.01 mm (1.2598—1.2602 in.)	32.02 mm (1.261 in.)
	O.D.		38.989—39.000 mm (1.5350—1.5354 in.)	38.94 mm (1.533 in.)
	Length 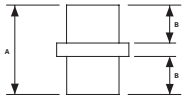	A	51.95—52.05 mm (2.045—2.049 in.)	———
		B	24.03—24.08 mm (0.946—0.948 in.)	———
Mainshaft 6th gear distance collar	I.D.		28.00—28.01 mm (1.102—1.103 in.)	28.02 mm (1.103 in.)
	O.D.		34.989—35.000 mm (1.3775—1.3779 in.)	34.940 mm (1.3756 in.)
	Length		24.03—24.08 mm (0.946—0.948 in.)	———
Reverse idler gear	I.D.		20.016—20.043 mm (0.7880—0.7891 in.)	20.90 mm (0.832 in.)
	Gear-to-reverse gear shaft clearance		0.036—0.084 mm (0.0014—0.0033 in.)	0.16 mm (0.006 in.)
Synchro ring (2005-2006 models)	Ring-to-gear clearance	Ring pushed against gear	0.70—1.49 mm (0.028—0.059 in.)	0.4 mm (0.016 in.)
Double cone synchro	Outer synchro ring-to-synchro cone clearance	Ring pushed against gear	0.70—1.19 mm (0.028—0.047 in.)	0.3 mm (0.012 in.)
	Synchro cone-to-gear clearance	Ring pushed against gear	0.50—1.04 mm (0.020—0.041 in.)	0.3 mm (0.012 in.)
	Outer synchro ring-to-gear cone clearance	Ring pushed against gear	0.95—1.68 mm (0.037—0.066 in.)	0.6 mm (0.024 in.)
Triple cone synchro	Outer synchro ring-to-synchro cone clearance	Ring pushed against gear	0.70—1.19 mm (0.028—0.047 in.)	0.3 mm (0.012 in.)
	Synchro cone-to-gear clearance	Ring pushed against gear	0.50—1.04 mm (0.020—0.041 in.)	0.3 mm (0.012 in.)
	Outer synchro ring-to-gear cone clearance	Ring pushed against gear	0.95—1.68 mm (0.037—0.066 in.)	0.6 mm (0.024 in.)
Shift fork	Finger thickness		7.4—7.6 mm (0.29—0.30 in.)	———
	Fork-to-synchro sleeve clearance		0.35—0.65 mm (0.014—0.026 in.)	1.0 mm (0.039 in.)
Reverse shift fork	Finger thickness		13.4—13.7 mm (0.527—0.539 in.)	———
	Fork-to-reverse idler gear clearance		0.20—0.59 mm (0.007—0.024 in.)	1.3 mm (0.051 in.)
Shift arm	I.D.		13.973—14.000 mm (0.5501—0.5512 in.)	———
	Shift fork diameter at contact area		16.9—17.0 mm (0.665—0.669 in.)	———
	Shift arm-to-shift lever clearance		0.2—0.5 mm (0.007—0.020 in.)	0.62 mm (0.024 in.)
Select lever	Finger width		14.85—14.95 mm (0.585—0.589 in.)	———
Change lever	Shaft-to-select lever clearance		0.05—0.25 mm (0.002—0.010 in.)	0.50 mm (0.020 in.)
	Groove (to select lever)		15.00—15.10 mm (0.591—0.594 in.)	———
	Shaft-to-shift arm clearance		0.013—0.070 mm (0.0005—0.0028 in.)	0.1 mm (0.004 in.)
M/T differential carrier	Pinion shaft contact area I.D.		18.010—18.028 mm (0.7091—0.7098 in.)	———
	Carrier-to-pinion shaft clearance		0.027—0.057 mm (0.0011—0.0022 in.)	0.1 mm (0.004 in.)
	Driveshaft contact area I.D.		28.025—28.045 mm (1.1033—1.1041 in.)	———
M/T differential pinion gear	Backlash		0.05—0.15 mm (0.002—0.006 in.)	———
	I.D.		18.042—18.066 mm (0.7103—0.7113 in.)	———
	Pinion gear-to-pinion shaft clearance		0.059—0.095 mm (0.0023—0.0037 in.)	0.15 mm (0.006 in.)
80 mm shim	80 mm shim-to-bearing outer race clearance in transmission housing		0—0.10 mm (0—0.0039 in.)	Adjust

Standards and Service Limits

Automatic Transmission and A/T Differential

Item	Measurement	Qualification	Standard or New	Service Limit
ATF (Automatic Transmission Fluid)	Capacity Use Acura ATF-Z1	Fluid change	2.9 L (3.1 US qt)	
		Overhaul	6.5 L (6.9 US qt)	
ATF pressure	Line pressure	At 2,000 rpm in N or P position	900—960 kPa (9.2—9.8 kgf/cm², 130—140 psi)	850 kPa (8.7 kgf/cm², 120 psi)
	1st clutch pressure	At 2,000 rpm in 1st gear in M position	890—970 kPa (9.1—9.9 kgf/cm², 130—140 psi)	840 kPa (8.6 kgf/cm², 120 psi)
	2nd clutch pressure	At 2,000 rpm in 2nd gear in M position	890—970 kPa (9.1—9.9 kgf/cm², 130—140 psi)	840 kPa (8.6 kgf/cm², 120 psi)
	3rd clutch pressure	At 2,000 rpm in 3rd gear in M position	890—970 kPa (9.1—9.9 kgf/cm², 130—140 psi)	840 kPa (8.6 kgf/cm², 120 psi)
	4th clutch pressure	At 2,000 rpm in 4th gear in M position	890—970 kPa (9.1—9.9 kgf/cm², 130—140 psi)	840 kPa (8.6 kgf/cm², 120 psi)
	5th clutch pressure	At 2,000 rpm in 5th gear in M position	890—970 kPa (9.1—9.9 kgf/cm², 130—140 psi)	840 kPa (8.6 kgf/cm², 120 psi)
Torque converter	Stall speed Check with vehicle on level ground		2,100 rpm	1,950—2,250 rpm
Clutch	Clutch end plate-to-top disc clearance	1st	———	1.23—1.43 mm (0.048—0.056 in.)
		2nd	———	0.75—0.95 mm (0.030—0.037 in.)
		3rd	———	0.83—1.03 mm (0.033—0.041 in.)
		4th and 5th	———	0.73—0.93 mm (0.029—0.037 in.)
	Clutch return spring free length	1st, 2nd, and 3rd	50.8 mm (2.00 in.)	48.8 mm (1.92 in.)
		4th and 5th	33.5 mm (1.32 in.)	31.5 mm (1.24 in.)
	Clutch disc thickness		1.94 mm (0.076 in.)	———
	Clutch plate thickness	1st, 2nd, and 3rd	2.00 mm (0.079 in.)	When discolored
		4th and 5th (2002-2004 models)	2.00 mm (0.079 in.)	When discolored
		4th and 5th (2005-2006 models)	2.30 mm (0.090 in.)	When discolored
	1st and 3rd clutch end plate thickness	Mark 1	2.3 mm (0.091 in.)	When discolored
		Mark 2	2.4 mm (0.094 in.)	When discolored
		Mark 3	2.5 mm (0.098 in.)	When discolored
		Mark 4	2.6 mm (0.102 in.)	When discolored
		Mark 5	2.7 mm (0.106 in.)	When discolored
		Mark 6	2.8 mm (0.110 in.)	When discolored
		Mark 7	2.9 mm (0.114 in.)	When discolored
		Mark 8	3.0 mm (0.118 in.)	When discolored
		Mark 9	3.1 mm (0.122 in.)	When discolored
		Mark 10	3.2 mm (0.126 in.)	When discolored
		Mark 11	3.3 mm (0.130 in.)	When discolored
		Mark 12	3.4 mm (0.134 in.)	When discolored

Item	Measurement	Qualification	Standard or New	Service Limit
Clutch	2nd clutch end plate thickness	Mark 1	2.6 mm (0.102 in.)	When discolored
		Mark 2	2.7 mm (0.106 in.)	When discolored
		Mark 3	2.8 mm (0.110 in.)	When discolored
		Mark 4	2.9 mm (0.114 in.)	When discolored
		Mark 5	3.0 mm (0.118 in.)	When discolored
		Mark 6	3.1 mm (0.122 in.)	When discolored
		Mark 7	3.2 mm (0.126 in.)	When discolored
		Mark 8	3.3 mm (0.130 in.)	When discolored
		Mark 9	3.4 mm (0.134 in.)	When discolored
	4th and 5th clutch end plate thickness 2002 model (# 1000001—1021247)	Mark 11	3.1 mm (0.122 in.)	When discolored
		Mark 12	3.2 mm (0.126 in.)	When discolored
		Mark 13	3.3 mm (0.130 in.)	When discolored
		Mark 14	3.4 mm (0.134 in.)	When discolored
		Mark 15	3.5 mm (0.138 in.)	When discolored
		Mark 16	3.6 mm (0.142 in.)	When discolored
		Mark 17	3.7 mm (0.146 in.)	When discolored
		Mark 18	3.8 mm (0.150 in.)	When discolored
		Mark 19	3.9 mm (0.154 in.)	When discolored
	4th and 5th clutch end plate thickness 2002 model (# 1021248—) and 2003-2004 models	Mark 1	3.0 mm (0.118 in.)	When discolored
		Mark 2	3.1 mm (0.122 in.)	When discolored
		Mark 3	3.2 mm (0.126 in.)	When discolored
		Mark 4	3.3 mm (0.130 in.)	When discolored
		Mark 5	3.4 mm (0.134 in.)	When discolored
		Mark 6	3.5 mm (0.138 in.)	When discolored
		Mark 7	3.6 mm (0.142 in.)	When discolored
		Mark 8	3.7 mm (0.146 in.)	When discolored
		Mark 9	3.8 mm (0.150 in.)	When discolored
	4th and 5th clutch end plate thickness 2005-2006 models	Mark 1	2.1 mm (0.083 in.)	When discolored
		Mark 2	2.2 mm (0.087 in.)	When discolored
		Mark 3	2.3 mm (0.091 in.)	When discolored
		Mark 4	2.4 mm (0.094 in.)	When discolored
		Mark 5	2.5 mm (0.098 in.)	When discolored
		Mark 6	2.6 mm (0.102 in.)	When discolored
		Mark 7	2.7 mm (0.106 in.)	When discolored
		Mark 8	2.8 mm (0.110 in.)	When discolored
		Mark 9	2.9 mm (0.114 in.)	When discolored

(cont'd)

Automatic Transmission and A/T Differential (cont'd)

Item	Measurement	Qualification	Standard or New	Service Limit
Mainshaft	Diameter of needle bearing contact area	At stator shaft	22.984—23.000 mm (0.905—0.906 in.)	When worn or damaged
		At 5th gear	51.975—51.991 mm (2.046—2.047 in.)	When worn or damaged
		At 4th gear collar	33.975—33.991 mm (1.3376—1.3382 in.)	When worn or damaged
	I.D. of gears	5th gear	57.000—57.019 mm (2.2441—2.2448 in.)	When worn or damaged
		4th gear	40.000—40.016 mm (1.5748—1.5754 in.)	When worn or damaged
	End play of gears	5th gear	0.03—0.11 mm (0.001—0.004 in.)	———
		4th gear	0.10—0.22 mm (0.004—0.009 in.)	———
	41 x 68 mm thrust washer thickness	No. 1	6.35 mm (0.250 in.)	When worn or damaged
		No. 2	6.40 mm (0.252 in.)	When worn or damaged
		No. 3	6.45 mm (0.254 in.)	When worn or damaged
		No. 4	6.50 mm (0.256 in.)	When worn or damaged
		No. 5	6.55 mm (0.258 in.)	When worn or damaged
		No. 6	6.60 mm (0.260 in.)	When worn or damaged
	4th gear collar length		66.3—66.4 mm (2.610—2.614 in.)	———
	Length of 4th gear collar flange from end		19.15—19.30 mm (0.754—0.760 in.)	When worn or damaged
	Sealing ring thickness		1.91—1.97 mm (0.0752—0.0776 in.)	1.86 mm (0.0732 in.)
	Width of sealing ring groove		2.025—2.060 mm (0.0797—0.0811 in.)	2.080 mm (0.0819 in.)
	Clutch feed pipe O.D.		7.97—7.98 mm (0.3138—0.3142 in.)	7.95 mm (0.313 in.)
	Clutch feed pipe bushing I.D.		8.000—8.015 mm (0.3150—0.3156 in.)	8.030 mm (0.3161 in.)
Countershaft	Diameter of needle bearing contact area	At torque converter housing	36.005—36.015 mm (1.4175—1.4179 in.)	When worn or damaged
		At 4th gear	34.982—34.998 mm (1.3772—1.3779 in.)	When worn or damaged
		At reverse gear collar	39.979—40.000 mm (1.5740—1.5748 in.)	When worn or damaged
	I.D. of gears	4th gear	41.000—41.016 mm (1.6142—1.6148 in.)	When worn or damaged
		Reverse gear	46.000—46.016 mm (1.8110—1.8116 in.)	When worn or damaged
	End play of gears	5th gear	0.00—0.48 mm (0—0.019 in.)	———
		4th gear	0.04—0.12 mm (0.002—0.005 in.)	———
		Reverse gear	0.10—0.25 mm (0.004—0.010 in.)	———
	Length of collars 2002 model (#1000001—1021247)	4th gear collar	24.00—24.05 mm (0.945—0.947 in.)	———
		Distance collar	74.25—74.30 mm (2.923—2.925 in.)	———
	Length of collars, and cotter thickness 2002 model (#1021248—) and 2003-2006 models	Collar 35 x 47 x 7.8 mm	7.7—7.8 mm (0.30—0.31 in.)	———
		Collar 37 x 41 x 57.8 mm	57.75—57.80 mm (2.274—2.276 in.)	———
		Cotter thickness	2.00 mm (0.078 in.)	———
	Reverse selector hub width		25.45—25.65 mm (1.002—1.010 in.)	———
	Reverse selector hub O.D.		55.87—55.90 mm (2.200—2.201 in.)	When worn or damaged

Item	Measurement	Qualification	Standard or New	Service Limit
Secondary shaft	Diameter of needle bearing contact area	At 1st gear	39.986—39.999 mm (1.5742—1.5748 in.)	When worn or damaged
		At 2nd gear	39.986—39.999 mm (1.5742—1.5748 in.)	When worn or damaged
		At 3rd gear collar	36.975—36.991 mm (1.4557—1.4563 in.)	When worn or damaged
	I.D. of gears	1st gear	47.000—47.016 mm (1.8504—1.8510 in.)	When worn or damaged
		2nd gear	46.000—46.016 mm (1.8110—1.8116 in.)	When worn or damaged
		3rd gear	43.000—43.016 mm (1.6929—1.6935 in.)	When worn or damaged
	End play of gears	1st gear	0.04—0.12 mm (0.002—0.005 in.)	———
		2nd gear	0.04—0.12 mm (0.002—0.005 in.)	———
		3rd gear	0.10—0.22 mm (0.004—0.009 in.)	———
	37 x 58 mm thrust washer thickness	No. 1	3.900 mm (0.154 in.)	When worn or damaged
		No. 2	3.925 mm (0.155 in.)	When worn or damaged
		No. 3	3.950 mm (0.156 in.)	When worn or damaged
		No. 4	3.975 mm (0.156 in.)	When worn or damaged
		No. 5	4.000 mm (0.157 in.)	When worn or damaged
		No. 6	4.025 mm (0.158 in.)	When worn or damaged
		No. 7	4.050 mm (0.159 in.)	When worn or damaged
		No. 8	4.075 mm (0.160 in.)	When worn or damaged
		No. 9	4.100 mm (0.161 in.)	When worn or damaged
		No. 10	4.125 mm (0.162 in.)	When worn or damaged
		No. 11	4.150 mm (0.163 in.)	When worn or damaged
		No. 12	4.175 mm (0.164 in.)	When worn or damaged
		No. 13	4.200 mm (0.165 in.)	When worn or damaged
		No. 14	4.225 mm (0.166 in.)	When worn or damaged
		No. 15	4.250 mm (0.167 in.)	When worn or damaged
		No. 16	4.275 mm (0.168 in.)	When worn or damaged
		No. 17	4.300 mm (0.169 in.)	When worn or damaged
		No. 18	4.325 mm (0.170 in.)	When worn or damaged
		No. 19	4.350 mm (0.171 in.)	When worn or damaged
		No. 20	4.375 mm (0.172 in.)	When worn or damaged
	40 x 51.5 mm thrust washer thickness	No. 1	4.80 mm (0.189 in.)	When worn or damaged
		No. 2	4.85 mm (0.191 in.)	When worn or damaged
		No. 3	4.90 mm (0.193 in.)	When worn or damaged
		No. 4	4.95 mm (0.195 in.)	When worn or damaged
		No. 5	5.00 mm (0.197 in.)	When worn or damaged
		No. 6	5.05 mm (0.199 in.)	When worn or damaged
	3rd gear collar length		43.9—44.0 mm (1.728—1.732 in.)	———
	Length of 3rd gear collar flange from end		5.25—5.40 mm (0.207—0.213 in.)	When worn or damaged
	Sealing ring thickness		1.91—1.97 mm (0.0752—0.0776 in.)	1.86 mm (0.0732 in.)
	Width of sealing ring groove		2.025—2.060 mm (0.0797—0.0811 in.)	2.080 mm (0.0819 in.)
	Clutch feed pipe O.D.	3rd clutch feed pipe	11.47—11.48 mm (0.4516—0.4520 in.)	11.45 mm (0.4508 in.)
		1st clutch feed pipe	6.97—6.98 mm (0.2744—0.2748 in.)	6.95 mm (0.2736 in.)
	Clutch feed pipe bushing I.D.	3rd clutch feed pipe	11.500—11.518 mm (0.4528—0.4553 in.)	11.530 mm (0.4539 in.)
		1st clutch feed pipe	7.018—7.030 mm (0.2763—0.2768 in.)	7.045 mm (0.2774 in.)
	ATF guide of sealing ring contact I.D.		29.000—29.021 mm (1.1417—1.1426 in.)	29.05 mm (1.144 in.)

(cont'd)

Automatic Transmission and A/T Differential (cont'd)

Item	Measurement	Qualification	Standard or New	Service Limit
Idler gear shaft	Diameter of needle bearing contact area	End cover side	32.003—32.013 mm (1.2600—1.2604 in.)	When worn or damaged
	Thickness of cotters		1.39—1.42 mm (0.0547—0.0559 in.)	———
Reverse idler gear	Reverse idler gear shaft diameter at needle bearing contact area		14.99—15.00 mm (0.5902—0.5906 in.)	When worn or damaged
	I.D.		20.007—20.020 mm (0.7877—0.7882 in.)	When worn or damaged
	I.D. of reverse idler gear shaft contact area on transmission housing		14.800—14.818 mm (0.5827—0.5834 in.)	———
	I.D. of reverse idler gear shaft holder		14.800—14.824 mm (0.5827—0.5836 in.)	When worn or damaged
ATF pump	ATF pump thrust clearance		0.03—0.06 mm (0.001—0.002 in.)	0.07 mm (0.003 in.)
	ATF pump gear-to-body clearance	Drive gear	0.210—0.265 mm (0.0083—0.0104 in.)	———
		Driven gear	0.070—0.125 mm (0.0028—0.0049 in.)	———
	ATF pump driven gear I.D.		14.016—14.034 mm (0.5518—0.5525 in.)	When worn or damaged
	ATF pump driven gear shaft O.D.		13.980—13.990 mm (0.5504—0.5508 in.)	When worn or damaged
Stator shaft	Needle bearing contact I.D.	Torque converter side	27.000—27.021 mm (1.063—1.064 in.)	When worn or damaged
		ATF pump side	29.000—29.021 mm (1.1417—1.1426 in.)	———
	Sealing ring contact area I.D.		29.000—29.021 mm (1.1417—1.1426 in.)	29.05 mm (1.144 in.)
Reverse shift fork	Fork finger thickness		5.90—6.00 mm (0.232—0.236 in.)	5.40 mm (0.213 in.)
Park gear and pawl	———		———	When worn or damaged
Servo body	Shift fork shaft bore I.D.		14.000—14.010 mm (0.5512—0.5516 in.)	———
	Shift fork shaft valve bore I.D.		37.000—37.039 mm (1.4567—1.4582 in.)	37.045 mm (1.4585 in.)
Regulator valve body	Sealing ring contact I.D.		29.000—29.021 mm (1.1417—1.1426 in.)	29.05 mm (1.144 in.)

Item	Measurement	Qualification	Standard or New			
			Wire Diameter	O.D.	Free Length	No. of Coil
Main valve body springs (see page 14-347)	Shift valve A spring		0.8 mm (0.031 in.)	5.6 mm (0.220 in.)	28.1 mm (1.106 in.)	15.9
	Shift valve B spring		0.8 mm (0.031 in.)	5.6 mm (0.220 in.)	28.1 mm (1.106 in.)	15.9
	Shift valve C spring		0.8 mm (0.031 in.)	5.6 mm (0.220 in.)	28.1 mm (1.106 in.)	15.9
	Relief valve spring		1.0 mm (0.039 in.)	9.6 mm (0.378 in.)	34.1 mm (1.343 in.)	10.2
	Lock-up control valve spring		0.65 mm (0.026 in.)	7.1 mm (0.280 in.)	23.1 mm (0.909 in.)	12.7
	Cooler check valve spring	2002 model (#1000001—1006166)	0.55 mm (0.022 in.)	5.8 mm (0.228 in.)	19.0 mm (0.748 in.)	9.6
		2002 model (#1006167—), and 2003-2006 models	0.85 mm (0.033 in.)	6.6 mm (0.260 in.)	27.0 mm (1.063 in.)	11.3
	Servo control valve spring		0.7 mm (0.028 in.)	6.6 mm (0.260 in.)	35.7 mm (1.406 in.)	17.2
	Shift valve E spring		0.8 mm (0.031 in.)	5.6 mm (0.220 in.)	28.1 mm (1.106 in.)	15.9

Item	Measurement	Qualification	Standard or New			
				O.D.	Free Length	
Regulator valve body springs (see page 14-349)	Stator reaction spring		4.5 mm (0.177 in.)	35.4 mm (1.394 in.)	30.3 mm (1.193 in.)	1.92
	Regulator valve spring A		1.9 mm (0.075 in.)	14.7 mm (0.579 in.)	80.6 mm (3.173 in.)	16.1
	Regulator valve spring B		1.6 mm (0.063 in.)	9.2 mm (0.362 in.)	44.0 mm (1.732 in.)	12.5
	Torque converter check valve spring		1.2 mm (0.047 in.)	8.6 mm (0.339 in.)	33.8 mm (1.331 in.)	12.2
	Lock-up shift valve spring		1.0 mm (0.039 in.)	6.6 mm (0.260 in.)	35.5 mm (1.398 in.)	18.2
	3rd accumulator spring		2.5 mm (0.098 in.)	14.6 mm (0.575 in.)	29.9 mm (1.177 in.)	4.9
	1st accumulator spring A		2.4 mm (0.094 in.)	18.6 mm (0.732 in.)	49.0 mm (1.929 in.)	7.1
	1st accumulator spring B		2.3 mm (0.091 in.)	12.2 mm (0.480 in.)	31.5 mm (1.240 in.)	6.6
Servo body springs (see page 14-350)	Shift valve D spring		0.8 mm (0.031 in.)	5.6 mm (0.220 in.)	28.1 mm (1.106 in.)	15.9
	4th accumulator spring B		2.3 mm (0.091 in.)	12.2 mm (0.480 in.)	31.5 mm (1.240 in.)	6.6
	4th accumulator spring A		2.4 mm (0.094 in.)	18.6 mm (0.732 in.)	49.0 mm (1.929 in.)	7.1
	2nd accumulator spring B		2.0 mm (0.079 in.)	10.6 mm (0.417 in.)	34.0 mm (1.339 in.)	8.0
	2nd accumulator spring A		2.2 mm (0.087 in.)	16.6 mm (0.654 in.)	48.2 mm (1.898 in.)	8.5
	5th accumulator spring		2.5 mm (0.098 in.)	14.6 mm (0.575 in.)	29.9 mm (1.177 in.)	4.9

Item	Measurement	Qualification	Standard or New	Service Limit
A/T differential carrier	Pinion shaft contact area I.D.		18.000—18.025 mm (0.709—0.710 in.)	———
	Carrier-to-pinion shaft clearance		0.013—0.054 mm (0.001—0.002 in.)	0.1 mm (0.004 in.)
	Driveshaft contact area I.D.		28.015—28.045 mm (1.103—1.104 in.)	———
	Carrier-to-driveshaft clearance		0.035—0.086 mm (0.001—0.003 in.)	0.12 mm (0.005 in.)
	Intermediate shaft contact I.D.		28.015—28.045 mm (1.103—1.104 in.)	———
	Carrier-to-intermediate shaft clearance		0.065—0.111 mm (0.003—0.004 in.)	0.12 mm (0.005 in.)
	Carrier bearing starting torque (preload)	For new bearing	2.7—3.9 N·m (28—40 kgf·cm, 24—35 lbf·in.)	Adjust
		For bearing reused	2.5—3.6 N·m (25—37 kgf·cm, 22—32 lbf·in.)	Adjust
	Final driven gear backlash	(References)	0.087—0.146 mm (0.003—0.006 in.)	0.2 mm (0.008 in.)
A/T differential pinion gear	Backlash		0.05—0.15 mm (0.002—0.006 in.)	———
	I.D.		18.042—18.066 mm (0.7103—0.7113 in.)	———
	Pinion gear-to-pinion shaft clearance		0.055—0.095 mm (0.0022—0.0037 in.)	0.12 mm (0.005 in.)

Standards and Service Limits

Steering

Item	Measurement	Qualification	Standard or New
Steering wheel	Rotational play measured at outside edge with engine running		0—10 mm (0—0.39 in.)
	Initial turning load measured at outside edge with engine running	K20A2 engine (2002-2004 models), K20Z1 engine (2005-2006 models)	38.2 N (3.9 kgf, 8.6 lbf)
		K20A3 engine	37.2 N (3.8 kgf, 8.4 lbf)
Gearbox	Angle of rack guide screw loosened from locked position		15° max.
Pump	Output pressure with shut-off valve closed	K20A2 engine (2002-2004 models)	7,160—7,850 kPa (73—80 kgf/cm^2, 1,040—1,140 psi)
		K20Z1 engine (2005-2006 models)	7,360—8,040 kPa (75—82 kgf/cm^2, 1,070—1,170 psi)
		K20A3 engine	6,570—7,260 kPa (67—74 kgf/cm^2, 950—1,050 psi)
Power steering fluid	Capacity Use Honda Power Steering Fluid	Fluid change	0.2 L (0.21 US qt)
		System overhaul [K20A3 engine model (M/T), K20A2 engine model (M/T)]	0.7 L (0.74 US qt)
		System overhaul [K20A3 engine model (A/T), K20Z1 engine model(M/T)]	0.8 L (0.85 US qt)

Suspension

Item	Measurement	Qualification	Standard or New	Service Limit
Wheel alignment	Camber	Front	0°00′ ±45′ (2002-2004 models), —0°30′ ±45′ (2005-2006 models)	
		Rear	—0°45′ ±45′ (2002-2004 models), —1°00′ ±45′ (2005-2006 models)	
	Caster	Front	1°30′ ±1° (2002-2004 models), 2°53′ ±1° (2005-2006 models)	
	Total Toe-in	Front	0±3 mm (0±0.12 in.)	
		Rear	2^{+2}_{-1} mm ($0.08^{+0.08}_{-0.04}$ in.)	
	Front wheel turning angle	Inward	35°00′ ±2°	
		Outward	28°00′ (Reference)	
Wheel	Aluminum wheel runout	Axial	0—0.7 mm (0—0.03 in.)	2.0 mm (0.08 in.)
		Radial	0—0.7 mm (0—0.03 in.)	1.5 mm (0.06 in.)
	Steel wheel runout	Axial	0—1.0 mm (0—0.04 in.)	2.0 mm (0.08 in.)
		Radial	0—1.0 mm (0—0.04 in.)	1.5 mm (0.06 in.)
Wheel bearing	End play	Front	0—0.05 mm (0—0.002 in.)	
		Rear	0—0.05 mm (0—0.002 in.)	

Brakes

Item	Measurement	Qualification	Standard or New	Service Limit
Parking brake lever	Distance traveled when lever pulled with 196 N (20 kgf, 44 lbf) of force		7 to 9 clicks	
Brake pedal	Pedal height (carpet removed)	M/T	180 mm (7 1/16 in.)	
		A/T	183 mm (7 3/16 in.)	
	Free play		1—5 mm (1/16—3/16 in.)	
Master cylinder	Piston-to-pushrod clearance		0—0.4 mm (0—0.02 in.)	
Brake disc	Thickness	Front ［K20A2 engine (2002-2004 models), K20Z1 engine (2005-2006 models)］	24.9—25.1 mm (0.98—0.99 in.)	23.0 mm (0.91 in.)
		Front (K20A3 engine)	20.9—21.1 mm (0.82—0.83 in.)	19.0 mm (0.75 in.)
		Rear	8.9—9.1 mm (0.350—0.358 in.)	8.0 mm (0.31 in.)
	Runout	Front	———	0.10 mm (0.004 in.)
		Rear	———	0.10 mm (0.004 in.)
	Parallelism	Front and rear	———	0.015 mm (0.0006 in.)
Brake pad	Thickness	Front	9.5—10.5 mm (0.37—0.41 in.)	1.6 mm (0.06 in.)
		Rear	8.5—9.5 mm (0.33—0.37 in.)	1.6 mm (0.06 in.)

Air Conditioning

Item	Measurement	Qualification	Standard or New
Refrigerant	Type		HFC-134a (R-134a)
	Capacity of system		500—550 g (17.6—19.4 oz)
Refrigerant oil	Type		KEIHIN: SP-10 (P/N 38897-P13-A01AH or 38899-P13-A01)
	Capacity of components	Condenser	25 mL (5/6 fl oz, 0.9 Imp oz)
		Evaporator	45 mL (1 1/2 fl oz, 1.6 Imp oz)
		Each line and hose	10 mL (1/3 fl oz, 0.4 Imp oz)
		Compressor	130—150 mL (4 1/3—5 fl oz, 4.6—5.3 Imp oz)
Compressor	Field coil resistance	At 68 ℉ (20 ℃)	3.05 —3.35 Ω
	Pulley-to-armature plate clearance		0.35—0.65 mm (0.014—0.026 in.)

Design Specifications

Item	Measurement		Qualification	Specification
DIMENSIONS	Overall length		2002-2004 models	4,395 mm (173.0 in.)
			2005-2006 models	4,385 mm (172.6 in.)
	Overall width		2002-2004 models	1,725 mm (67.9 in.)
			2005-2006 models	1,725 mm (67.9 in.)
	Overall height		2002-2004 models	1,400 mm (55.1 in.)
			2005-2006 models	1,395 mm (54.9 in.)
	Wheelbase			2,570 mm (101.2 in.)
	Track	Front	2002-2004 models	1,482 mm (58.3 in.)
			2005-2006 models	1,485 mm (58.5 in.)
		Rear	2002-2004 models	1,481 mm (58.3 in.)
			2005-2006 models	1,485 mm (58.5 in.)
	Ground clearance	Type S	2002-2004 models	149 mm (5.9 in.)
		RSX, Premium		152 mm (6.0 in.)
		Type S	2005-2006 models	137 mm (5.4 in.)
		RSX, Premium		146 mm (5.7 in.)
	Seating capacity			four (4)
WEIGHT (U.S.A.)	Gross Vehicle Weight Rating (GVWR)	RSX	2002-2004 models	3,700 lbs
		Type S		3,690 lbs
		RSX, Type S	2005-2006 models	3,725 lbs
WEIGHT (CANADA)	Gross Vehicle Weight Rating (GVWR)	RSX, Type S	2002-2004 models	1,670 kg
		Premium		1,675 kg
		RSX, Premium, Type S	2005-2006 models	1,690 kg
ENGINE	Type			Water cooled, 4-stroke DOHC i-VTEC engine
	Cylinder arrangement			Inline 4-cylinder, transverse
	Bore and stroke			86 x 86 mm (3.39 x 3.39 in.)
	Displacement			1,998 cm^3 (121.9 cu in.)
	Compression ratio		K20A2 (2002-2004 models), K20Z1 (2005-2006 models) engines	11.0
			K20A3 engine	9.8
	Valve train			Chain drive, DOHC i-VTEC 4 valves per cylinder
	Lubrication system			Forced, wet sump, with trochoid pump
	Oil pump displacement		At 6,000 rpm	54.3 L (57.4 US qt)/minute
	Water pump displacement		At 6,000 rpm	82 L (87 US qt)/minute
	Fuel required		K20A2 (2002-2004 models), K20Z1 (2005-2006 models) engines	Premium UNLEADED gasoline with 91 Pump Octane Number or higher
			K20A3 engine	Regular UNLEADED gasoline with 87 Pump Octane Number or higher
STARTER	Type			Gear reduction
	Normal output		K20A2 (2002-2004 models), K20Z1 (2005-2006 models) engines	1.1 kW
			K20A3 engine	1.2 kW
	Normal voltage			12 V
	Hour rating			30 seconds
	Direction of rotation			Clockwise as viewed from gear end

Item	Measurement	Qualification	Specification
CLUTCH	Clutch type	M/T	Single plate dry, diaphragm spring
		A/T	3-element torque converter with lock-up clutch
	Clutch friction material surface area	M/T	174 cm^2 (26.97 sq in.)
5-speed MANUAL TRANSMISSION	Type		Synchronized, 5-speed forward, 1 reverse
	Primary reduction		Direct 1:1
	Gear ratio	1st	3.266
		2nd	1.880
		3rd	1.212
		4th	0.921
		5th	0.738
		Reverse	3.583
	Final reduction	Type	Single helical gear
		Gear ratio	4.388
6-speed MANUAL TRANSMISSION	Type		Synchronized, 6-speed forward, 1 reverse
	Primary reduction		Direct 1:1
	Gear ratio	1st	3.266
		2nd	2.130
		3rd	1.517
		4th	1.147
		5th	0.921
		6th	0.738
		Reverse	3.583
	Final reduction	Type	Single helical gear
		Gear ratio (2002-2004 models)	4.388
		Gear ratio (2005-2006 models)	4.765
AUTOMATIC TRANSMISSION	Type		Electronically controlled automatic, 5-speed forward, 1 reverse
	Primary reduction		Direct 1:1
	Gear ratio	1st	2.684
		2nd	1.500
		3rd	0.984
		4th	0.733
		5th	0.571
		Reverse	2.000
	Final reduction	Type	Single helical gear
		Gear ratio	4.563
STEERING	Type		Power-assisted rack and pinion
	Overall ratio	2002-2004 models	15.06
		2005-2006 models	14.92
	Turns, lock-to-lock	2002-2004 models	2.64
		2005-2006 models	2.59
	Steering wheel diameter		360 mm (14.2 in.)

(cont'd)

Design Specifications

(cont'd)

Item	Measurement	Qualification	Specification
SUSPENSION	Type	Front	Independent strut with stabilizer, coil spring
		Rear	Double wishbone
	Shock absorber	Front	Telescopic, hydraulic, nitrogen gas-filled
		Rear	Telescopic, hydraulic, nitrogen gas-filled
TIRES (U.S.A.)	Size of front and rear tires	RSX	P205/55R16 89V
		Type S	P205/55R16 89V (2002-2004 models), P215/45R17 87V (2005-2006 models)
	Size of spare tire	RSX	T135/70D15 99M
		Type S	T125/70D16 96M
TIRES (CANADA)	Size of front and rear tires	RSX	P195/65R15 89H
		Premium	P205/55R16 89V
		Type S	P205/55R16 89V (2002-2004 models), P215/45R17 87V (2005-2006 models)
	Size of spare tire	RSX	T135/70D15 99M
		Premium	T135/70D15 99M
		Type S	T125/70D16 96M
WHEEL ALIGNMENT	Camber	Front	0°
		Rear	—0°45′
	Caster	Front	1°30′
	Total toe-in	Front	0 mm (0 in.)
		Rear	2 mm (1/16 in.)
BRAKES	Type of service brake	Front	Power-assisted self-adjusting ventilated disc
		Rear	Power-assisted self-adjusting solid disc
	Type of parking brake		Mechanical actuating, rear wheels
	Pad friction surface area	Front	42 cm^2 (6.5 sq in.) x 2
		Rear	21 cm^2 (3.3 sq in.) x 2
	Shoe friction surface area	Rear	49.0 cm^2 (7.60 sq in.) x 2

Item	Measurement	Qualification	Specification
AIR CONDITIONING	Compressor	Type	Scroll
		Number of cylinder	———
		Capacity	85.7 mL (5.23 cu in.)/rev.
		Maximum speed	12,000 rpm
		Lubricant capacity	130—150 mL (4 1/3—5 fl oz, 4.6—5.3 Imp oz)
		Lubricant type	KEIHIN SP-10 (P/N 38897-P13-A01AH or 38899-P13-A01)
	Condenser	Type	Corrugated fin
	Evaporator	Type	Corrugated fin
	Blower	Type	Sirocco fan
		Motor type	220 W/12 V
		Speed control	Infinite variable
		Maximum capacity	480 m^3 (16.900 cu ft)/h
	Temperature control		Air-mix type
	Compressor clutch	Type	Dry, single plate, poly-V belt drive
		Electrical power consumption at 68 ℉ (20 ℃)	42 W maximum at 12 V
	Refrigerant	Type	HFC-134a (R-134a)
		Capacity	500—550 g (17.6—19.4 oz)
ELECTRICAL RATINGS	Battery		12 V—36 AH/5 hours
	Fuses	Under-hood fuse/relay box	100A, 50A, 40A, 30A, 20A, 15A, 10A, 7.5A
		Under-dash fuse/relay box	20A, 15A, 10A, 7.5A
		Under-dash auxiliary fuse/relay box	15A
	Light bulbs	Headlight high beam	12 V—55 W (2002-2004 models), 12 V—65 W (2005-2006 models)
		Headlight low beam	12 V—55 W
		Front turn signal lights	12 V—21 W
		Front parking lights	12 V—5 W
		Rear turn signal lights	12 V—21 W
		Rear side marker lights	12 V—5 W
		Brake/taillights	12 V—21/5 W
		High-mount brake light	12 V—21 W
		Back-up lights	12 V—21 W
		License plate light	12 V—5 W
		Ceiling light	12 V—8 W
		Cargo area light	12 V—5 W
		Spotlights	12 V—8 W
		Gauge lights	LED
		Indicator lights	LED

2002-2004 Models

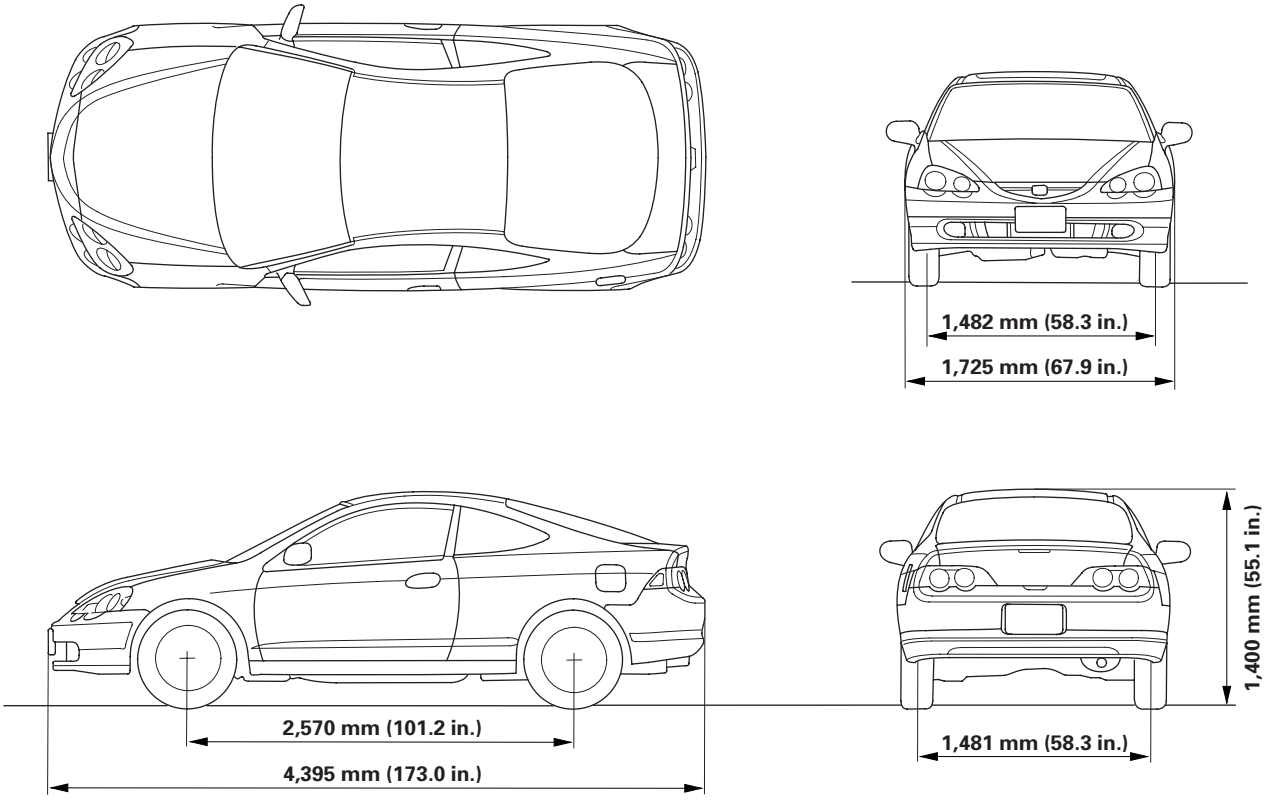

2005-2006 Models

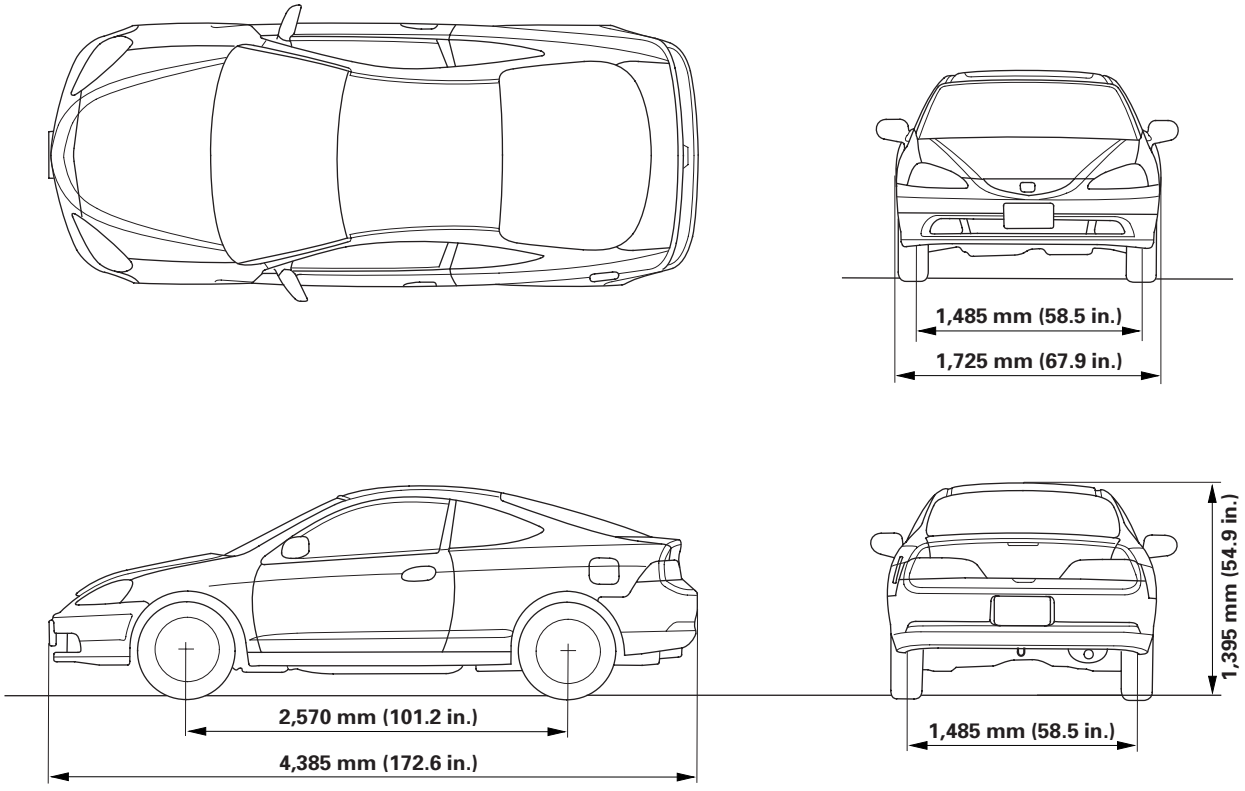

Maintenance

Lubricants and Fluids 3-2

Maintenance Schedules
Listed by Distance/Time for Normal Conditions
2002-2003 Models 3-4
Listed by Distance/Time for Severe Conditions
2002-2003 Models 3-7

Listed by Distance/Time for Normal Conditions
2004-2006 Models 3-10
Listed by Distance/Time for Severe Conditions
2004-2006 Models 3-13

Lubricants and Fluids

For details of lubrication points and type of lubricants to be applied, refer to the illustrated index and various work procedures (such as Assembly/Reassembly, Replacement, Overhaul, Installation, etc.) contained in each section.

	LUBRICATION POINTS	LUBRICANT
A	Engine	ACURA Motor Oil: Except Type S models-P/N 08798-9023A (5W-20) Honda Motor Oil: Type S model-P/N 08798-9014 (5W-30) Look for the API certification seal on the oil container as shown below. Make sure it says ''For Gasoline Engines''. SAE viscosity: See chart below.
B	Manual transmission	ACURA Manual Transmission Fluid (MTF): P/N 08798-9016A Always use Acura MTF. Using motor oil can cause stiffer shifting because it does not contain the proper additives.
	Automatic transmission	ACURA Automatic Transmission Fluid (ATF-Z1): P/N 08200-9001 Always use Acura ATF-Z1. Using a non-Acura ATF can affect shift quality.
C	Brake system (including ABS line)	ACURA DOT 3 Brake Fluid: P/N 08798-9008A Always use Acura DOT 3 Brake Fluid. Using a non-Acura brake fluid can cause corrosion and decrease the life of the system.
D	Clutch line	ACURA DOT 3 Brake Fluid: P/N 08798-9008A Always use Acura DOT 3 Brake Fluid. Using a non-Acura brake fluid can cause corrosion and decrease the life of the system.
E F G H	Shift lever (manual transmission) Release fork (manual transmission) Shift and select cable ends Throttle cable end (throttle link)	Super High Temp Urea Grease: P/N 08798-9002
I J	Throttle cable end (below dashboard) Caliper piston boot, cariper pins, and boots	Honda Silicone Grease: P/N 08C30-B0234M
K L M N O P Q R	Brake booster clevis Clutch master cylinder clevis Battery terminals Pedal linkage Fuel fill door Hood hinges and hood latch Hatch hinges Power steering gearbox	Multipurpose Grease
S	Power steering system	ACURA Power Steering Fluid: P/N 08206-9002A Always use Acura Power Steering Fluid. Using any other type of power steering fluid or automatic transmission fluid can cause increased wear and poor steering in cold weather.
T	Air conditioning compressor	Compressor oil: KEIHIN SP-10 (P/N 38897-P13-A01AH or 38899-P13-A01) for refrigerant HFC-134a (R-134a)

API CERTIFICATION SEAL

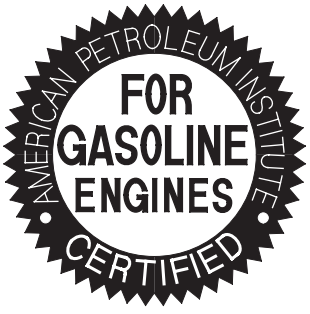

Recommended Engine Oil
Engine oil viscosity for ambient temperature ranges

For RSX and Premium models

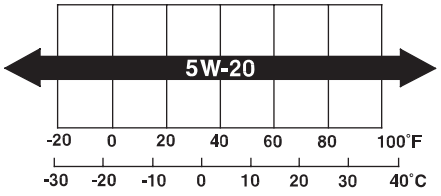

For Type S model

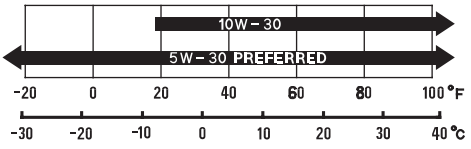

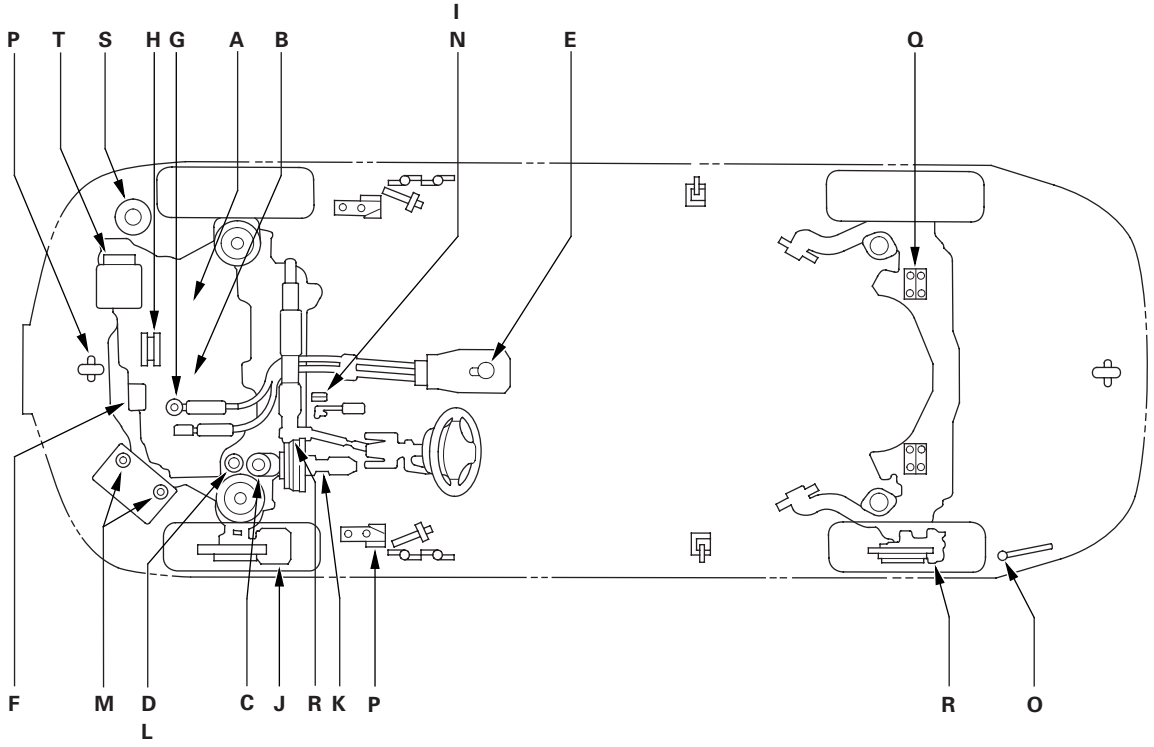
P
T
S
H
G
A
B
I
N
E
Q
F
M
D
L
C
J
R
K
P
R
O

Listed by Distance/Time for Normal Conditions

2002-2003 Models

Follow the Normal Schedule if the severe driving conditions specified in the Maitenance Schedule for Severe Conditions do not apply, and if only OCCASIONALY driven in severe driving conditions. Follow the Severe Conditions schedule if the vehicle is driven MAINLY in Canada.

Distance		Time	Maintenance Items
10,000 miles	16,000 km	1 year	Do items in A.
20,000 miles	32,000 km	1 year	Do items in A and B.
30,000 miles	48,000 km	2 years	Do items in A, C, and D.
40,000 miles	64,000 km	2 years	Do items in A and B.
50,000 miles	80,000 km	3 years	Do items in A.
60,000 miles	96,000 km	3 years	Do items in A, B, C, and D.
———	———	3 years	Replace brake fluid (see page 19-8). Use ACURA DOT 3 Brake Fluid.
70,000 miles	112,000 km	4 years	Do items in A.
80,000 miles	128,000 km	4 years	Do items in A and B.
90,000 miles	144,000 km	5 years	Do items in A, C, and D.
100,000 miles	160,000 km	5 years	Do items in A and B.
110,000 miles	176,000 km	———	Do items in E.
110,000 miles	176,000 km	6 years	Do items in A.
———	———	6 years	Replace brake fluid (see page 19-8). Use ACURA DOT 3 Brake Fluid.
110,000 miles	176,000 km	7 years	Inspect idle speed (see page 11-348). Idle speed: M/T 700±50 rpm in neutral, A/T 700±50 rpm in N or P position.
120,000 miles	192,000 km	6 years	Do items in A, B, C, D, and F.
———	———	9 years	Replace brake fluid (see page 19-8). Use ACURA DOT 3 Brake Fluid.
120,000 miles	192,000 km	10 years	Do item in G.
———	———	12 years	Replace brake fluid (see page 19-8). Use ACURA DOT 3 Brake Fluid.

Do the items in parts A, B, C, D, E, F, and G as required for the mileage/time interval listed.

Part	Maintenance Items
A	Replace engine oil (see page 8-8) every 10,000 miles (16,000 km) or 1 year. Engine oil capacity without oil filter: K20A2 engine (2002-2003 models) 4.5 L (4.8 US qt), K20A3 engine (2002-2003 models) 4.0 L (4.2 US qt).
	Rotate tires, and check tire inflation and condition every 10,000 miles (16,000 km). Follow the pattern shown in the Owner's Manual.
B	Replace engine oil filter (see page 8-9) every 20,000 miles (32,000 km) or 1 year. Engine oil capacity with oil filter: K20A2 engine (2002-2003 models) 4.7 L (5.0 US qt), K20A3 engine (2002-2003 models) 4.2 L (4.4 US qt).
	Check front and rear brake wear (see page 19-4) every 20,000 miles (32,000 km) or 1 year. • Check pads and discs for wear (thickness), damage, and cracks. • Check calipers for damage, leak, and tightness of mount bolts.
	Check parking brake adjustment (see page 19-7) every 20,000 miles (32,000 km) or 1 year. Check the number of clicks (7 to 9) when the parking brake lever is pulled with 196 N (20 kgf, 44 lbf) of force.
	Inspect tie rod ends, steering gearbox, and gearbox boots (see page 17-8) every 20,000 miles (32,000 km) or 1 year. • Check rack grease and steering linkage. • Check boots for damage and leaking grease. • Check fluid lines for damage or leaks.
	Inspect suspension components (see page 18-3) every 20,000 miles (32,000 km) or 1 year. • Check bolts for tightness. • Check condition of ball joint boots for deterioration and damage.
	Inspect driveshaft boots (see page 16-4) every 20,000 miles (32,000 km) or 1 year. Check boots for cracks and boot bands for tightness.
	Inspect brake hoses and lines including ABS (see page 19-24) every 20,000 miles (32,000 km) or 1 year. Check the master cylinder, proportioning control valve, and ABS modulator-control unit for damage and leakage.
	Inspect all fluid levels and condition of fluids every 20,000 miles (32,000 km) or 1 year. • Manual transmission fluid (MTF) (see page 13-4). • Automatic transmission fluid (ATF-Z1) (see page 14-271). • Clutch fluid. • Engine coolant (see page 10-6). • Power steering fluid (see page 17-12). • Brake fluid (see page 19-8). • Windshield washer fluid.
	Inspect exhaust system (see page 9-14) every 20,000 miles (32,000 km) or 1 year.* Check catalytic converter heat shield, exhaust pipe, and muffler for damage, leak, and tightness (see page 9-15).
	Inspect fuel lines and connections (see page 11-368) every 20,000 miles (32,000 km) or 1 year.* Check loose connections, cracks, and deterioration; retighten loose connections and replace damaged parts.
C	Inspect drive belt every 30,000 miles (48,000 km) or 2 years. Look for cracks and damage, then check the position of the drive belt auto-tensioner indicator (see page 4-43).
	Replace dust and pollen filter (see page 21-49) every 30,000 miles (48,000 km) or 2 years. Replace the filter whenever airflow from the heating and cooling/climate control system is less than normal.

NOTE: According to state and federal regulations, failure to do the maintenance items marked with an asterisk (*) will not void the customer's emissions warranties. However, Acura recommends that all maintenance services be done at the recommended intervals to ensure long-term reliability.

(cont'd)

Listed by Distance/Time for Normal Conditions (cont'd)

2002-2003 Models

Follow the Normal Schedule if the severe driving conditions specified in the Maintenance Schedule for Severe Conditions do not apply, and if only OCCASIONALLY driven in severe driving conditions. Follow the Severe Conditions schedule if the vehicle is driven MAINLY in Canada.

Do the items in parts A, B, C, D, E, F, and G as required for the mileage/time interval listed.

Part	Maintenance Items
D	Replace air cleaner element (see page 11-407) every 30,000 miles (48,000 km). Independent of time.
E	Replace spark plugs (see page 4-28) every 110,000 miles (176,000 km). Use IZFR6K11 (NGK) or SKJ20DR-M11 (DENSO) for K20A3 engine (2002-2003 models) and use IFR7G11K, IFR7G11KS (NGK) or SK22PR-M11, SK22PR-M11S (DENSO) for K20A2 engine (2002-2003 models); GAP 1.0—1.1 mm (0.039—0.043 in.).
	Inspect the valve clearance (see page 6-11) every 110,000 miles (176,000 km) otherwise adjust only if noisy. • K20A2 engine (2002-2003 models): Intake: 0.21—0.25 mm (0.008—0.010 in.), Exhaust: 0.25—0.29 mm (0.010—0.011 in.). • K20A3 engine (2002-2003 models): Intake: 0.21—0.25 mm (0.008—0.010 in.), Exhaust: 0.28—0.32 mm (0.011—0.013 in.).
F	Replace automatic transmission fluid (see page 14-272) at 120,000 miles (192,000 km) or 6 years, then replace every 90,000 miles (144,000 km) or 5 years. Capacity: 2.9 L (3.1 US qt), use ACURA ATF-Z1.
	Replace manual transmission fluid (see page 13-4) at 120,000 miles (192,000 km) or 6 years, then replace every 90,000 miles (144,000 km) or 5 years. Capacity: 1.5 L (1.6 US qt), use ACURA MTF.
G	Replace engine coolant (see page 10-6) at 120,000 miles (192,000 km) or 10 years, then every 60,000 miles (96,000 km) or 5 years. Capacity: M/T 5.1 L (1.35 US gal), A/T 5.0 L (1.32 US gal), use ACURA Long Life Antifreeze/coolant Type 2.

Listed by Distance/Time for Severe Conditions

2002-2003 Models

Use the Severe Conditions schedule if the vehicle is driven MAINLY in Canada or in any of the following conditions. If only OCCASIONALLY driven in these conditions, use the Normal Conditions schedule.

Severe Driving Conditions

- Driving less than 5 miles (8 km) per trip or, in freezing temperatures, driving less than 10 miles (16 km) per trip.
- Driving in extremely hot over 90 ℉ (32 ℃) conditions.
- Extensive idling, or long periods of stop-and-go driving , such as a taxi or a commercial delivery vehicle.
- Trailer towing, driving with a loaded roof rack, or driving in mountainous conditions.
- Driving on muddy, dusty, or de-iced roads.

Distance		Time	Maintenance Items
5,000 miles	8,000 km	———	Do item in A.
10,000 miles	16,000 km	1 year	Do items in A and B.
15,000 miles	24,000 km	———	Do items in A and C.
20,000 miles	32,000 km	1 year	Do items in A, B, and D.
25,000 miles	40,000 km	———	Do item in A.
30,000 miles	48,000 km	2 years	Do items in A, B, E, and F.
35,000 miles	56,000 km	———	Do item in A.
40,000 miles	64,000 km	2 years	Do items in A, B, and D.
45,000 miles	72,000 km	———	Do items in A and C.
50,000 miles	80,000 km	3 years	Do items in A and B.
55,000 miles	88,000 km	———	Do item in A.
60,000 miles	96,000 km	3 years	Do items in A, B, D, E, F, G, and H.
———	———	3 years	Replace brake fluid (see page 19-8). Use ACURA DOT 3 Brake Fluid.
65,000 miles	104,000 km	———	Do item in A.
70,000 miles	112,000 km	4 years	Do items in A and B.
75,000 miles	120,000 km	———	Do items in A and C.
80,000 miles	128,000 km	4 years	Do items in A, B, and D.
85,000 miles	136,000 km	———	Do item in A.
90,000 miles	144,000 km	5 years	Do items in A, B, E, F, and G.
95,000 miles	152,000 km	———	Do item in A.
100,000 miles	160,000 km	5 years	Do items in A, B, and D.
105,000 miles	168,000 km	———	Do items in A and C.
110,000 miles	176,000 km	———	Do items in I.
110,000 miles	176,000 km	6 years	Do items in A and B.
———	———	6 years	Replace brake fluid (see page 19-8). Use ACURA DOT 3 Brake Fluid.
110,000 miles	176,000 km	7 years	Inspect idle speed (see page 11-348). Idle speed: M/T 700±50 rpm in neutral, A/T 700±50 rpm in N or P position.
115,000 miles	184,000 km	———	Do item in A.
120,000 miles	192,000 km	6 years	Do items in A, B, D, E, F, and H.
120,000 miles	192,000 km	7 years	Do item in G.
———	———	9 years	Replace brake fluid (see page 19-8). Use ACURA DOT 3 Brake Fluid.
120,000 miles	192,000 km	10 years	Do item in J.

(cont'd)

Listed by Distance/Time for Severe Conditions (cont'd)

2002-2003 Models

Use the Severe Conditions schedule if the vehicle is driven MAINLY in Canada or in any of the following conditions. If only OCCASIONALLY driven in these conditions, use the Normal Conditions schedule.

Severe Driving Conditions
- Driving less than 5 miles (8 km) per trip or, in freezing temperatures, driving less than 10 miles (16 km) per trip.
- Driving in extremely hot over 90 °F (32 °C) conditions.
- Extensive idling, or long periods of stop-and-go driving, such as a taxi or a commercial delivery vehicle.
- Trailer towing, driving with a loaded roof rack, or driving in mountainous conditions.
- Driving on muddy, dusty, or de-iced roads.

Do the items in parts A, B, C, D, E, F, G, H, I, and J as required for the mileage/time interval listed.

Part	Maintenance Items
A	Replace engine oil (see page 8-8) every 5,000 miles (8,000 km) or 6 months. Engine oil capacity without oil filter: K20A2 engine (2002-2003 models) 4.5 L (4.8 US qt), K20A3 engine (2002-2003 models) 4.0 L (4.2 US qt).
B	Replace engine oil filter (see page 8-9) every 10,000 miles (16,000 km) or 1 year. Engine oil capacity with oil filter: K20A2 engine (2002-2003 models) 4.7 L (5.0 US qt), K20A3 engine (2002-2003 models) 4.2 L (4.4 US qt).
	Check front and rear brake wear (see page 19-4) every 10,000 miles (16,000 km) or 1 year. • Check pads and discs for wear (thickness), damage, and cracks. • Check calipers for damage, leaks, and tightness of mount bolts.
	Lubricate all hinges, locks, and latches every 10,000 miles (16,000 km) or 1 year.
	Rotate tires, and check tire inflation and condition every 10,000 miles (16,000 km). Follow the pattern shown in the Owner's Manual.
	Inspect tie rod ends, steering gearbox, and gearbox boots (see page 17-8) every 10,000 miles (16,000 km) or 1 year. • Check rack grease and steering linkage. • Check boots for damage and leaking grease. • Check fluid lines for damage or leaks.
	Inspect suspension components (see page 18-3) every 10,000 miles (16,000 km) or 1 year. • Check bolts for tightness. • Check condition of ball joint boots for deterioration and damage.
	Inspect driveshaft boots (see page 16-4) every 10,000 miles (16,000 km) or 1 year. Check boots for cracks and boot bands for tightness.
C	Clean air cleaner element (see page 11-407) every 15,000 miles (24,000 km). Independent of time.
D	Check parking brake adjustment (see page 19-7) every 20,000 miles (32,000 km) or 1 year. Check the number of clicks (7 to 9) when the parking brake lever is pulled with 196 N (20 kgf, 44 lbf) of force.
	Inspect brake hoses and lines including ABS (see page 19-24) every 20,000 miles (32,000 km) or 1 year. Check the master cylinder, proportioning control valve, and ABS modulator-control unit for damage and leakage.
	Inspect all fluid levels and condition of fluids every 20,000 miles (32,000 km) or 1 year. • Manual transmission fluid (MTF) (see page 13-4). • Automatic transmission fluid (ATF-Z1) (see page 14-271). • Clutch fluid. • Engine coolant (see page 10-6). • Power steering fluid (see page 17-12). • Brake fluid (see page 19-8). • Windshield washer fluid.
	Inspect exhaust system (see page 9-14) every 20,000 miles (32,000 km) or 1 year.* Check catalytic converter heat shield, exhaust pipe, and muffler for damage, leak, and tightness (see page 9-15).
	Inspect fuel lines and connections (see page 11-368) every 20,000 miles (32,000 km) or 1 year.* Check for loose connections, cracks, and deterioration; retighten loose connections and replace damaged parts.
	Check lights and controls every 20,000 miles (32,000 km) or 1 year. Check function of interior and exterior lights (see page 22-78), and position of the headlights (see page 22-88).
	Inspect vehicle underbody every 20,000 miles (32,000 km) or 1 year. Check the paint for damage, scratches, stone chipping, and dents.

Do the items in parts A, B, C, D, E, F, G, H, I, and J as required for the mileage/time interval listed.

Part	Maintenance Items
E	Inspect drive belt every 30,000 miles (48,000 km) or 2 years. Look for cracks and damage, then check the position of the drive belt auto-tensioner indicator (see page 4-43).
	Replace dust and pollen filter (see page 21-49) every 30,000 miles (48,000 km) or 2 years. Replace the filter twice as often (at 15,000 miles/24,000 km intervals) if the vehicle is driven mostly in urban areas that have high concentrations of soot in the air from industry and diesel-powered vehicles; also replace the dust and pollen filter anytime airflow is less than usual.
F	Replace air cleaner element (see page 11-407) every 30,000 miles (48,000 km). • Independent of time. • In dusty conditions, replace every 15,000 miles (24,000 km).
G	Replace automatic transmission fluid (see page 14-272) at 60,000 miles (96,000 km) or 3 years, then replace every 30,000 miles (48,000 km) or 2 years. Capacity: 2.9 L (3.1 US qt), use ACURA ATF-Z1.
H	Replace manual transmission fluid (see page 13-4) every 60,000 miles (96,000 km) or 3 years. Capacity: 1.5 L (1.6 US qt), use ACURA MTF.
I	Replace spark plugs (see page 4-28) every 110,000 miles (176,000 km). Use IZFR6K11 (NGK) or SKJ20DR-M11 (DENSO) for K20A3 engine (2002-2003 models) and use IFR7G11K, IFR7G11KS (NGK) or SK22PR-M11, SK22PR-M11S (DENSO) for K20A2 engine (2002-2003 models); GAP 1.0—1.1 mm (0.039—0.043 in.).
	Inspect the valve clearance (see page 6-11) every 110,000 miles (176,000 km) otherwise adjust only if noisy. • K20A2 engine (2002-2003 models): Intake: 0.21—0.25 mm (0.008—0.010 in.), Exhaust: 0.25—0.29 mm (0.010—0.011 in.). • K20A3 engine (2002-2003 models): Intake: 0.21—0.25 mm (0.008—0.010 in.), Exhaust: 0.28—0.32 mm (0.011—0.013 in.).
J	Replace engine coolant (see page 10-6) at 120,000 miles (192,000 km) or 10 years, then every 60,000 miles (96,000 km) or 5 years. Capacity: M/T 5.1 L (1.35 US gal), A/T 5.0 L (1.32 US gal), use ACURA Long Life Antifreeze/coolant Type 2.

NOTE: According to state and federal regulations, failure to do the maintenance items marked with an asterisk (*) will not void the customer's emissions warranties. However, Acura recommends that all maintenance services be done at the recommended intervals to ensure long-term reliability.

Listed by Distance/Time for Normal Conditions

2004-2006 Models

Follow the Normal Schedule if the severe driving conditions specified in the Maintenance Schedule for Severe Conditions do not apply, and if only OCCASIONALLY driven in severe driving conditions. Follow the Severe Conditions schedule if the vehicle is driven MAINLY in Canada.

Distance		Time	Maintenance Items
10,000 miles	16,000 km	———	Do items in A.
20,000 miles	32,000 km	1 year	Do items in A and B.
30,000 miles	48,000 km	———	Do items in A, C, and D.
40,000 miles	64,000 km	2 years	Do items in A and B.
50,000 miles	80,000 km	———	Do items in A.
60,000 miles	96,000 km	3 years	Do items in A, B, C, and D.
———	———	3 years	Replace brake fluid (see page 19-8). Use ACURA DOT 3 Brake Fluid.
70,000 miles	112,000 km	———	Do items in A.
80,000 miles	128,000 km	4 years	Do items in A and B.
90,000 miles	144,000 km	———	Do items in A, C, and D.
100,000 miles	160,000 km	5 years	Do items in A and B.
110,000 miles	176,000 km	———	Do items in E.
110,000 miles	176,000 km	6 years	Do items in A.
———	———	6 years	Replace brake fluid (see page 19-8). Use ACURA DOT 3 Brake Fluid.
120,000 miles	192,000 km	6 years	Do items in A, B, C, D, and F.
———	———	9 years	Replace brake fluid (see page 19-8). Use ACURA DOT 3 Brake Fluid.
120,000 miles	192,000 km	10 years	Do item in G.
130,000 miles	208,000 km	———	Do items in A.
140,000 miles	224,000 km	11 years	Do items in A and B.
150,000 miles	240,000 km	———	Do items in A, C, and D.
160,000 miles	256,000 km	———	Inspect idle speed (see page 11-348). Idle speed:K20A2 engine (2004 model) 700±50 rpm in neutral, K20A3 engine (2004-2006 M/T models) 700±50 rpm in neutral, K20A3 engine (2004-2006 A/T models) 700±50 rpm in N or P position, K20Z1 engine (2005-2006 Type S models) 800±50 rpm in neutral.
160,000 miles	256,000 km	12 years	Do items in A and B.
———	———	12 years	Replace brake fluid (see page 19-8). Use ACURA DOT 3 Brake Fluid.

Do the items in parts A, B, C, D, E, F, and G as required for the mileage/time interval listed.

Part	Maintenance Items
A	Replace engine oil (see page 8-8) every 10,000 miles (16,000 km) or 1 year. Engine oil capacity without oil filter: K20A2 engine (2004 model) and K20Z1 engine (2005-2006 models) 4.5 L (4.8 US qt), K20A3 engine (2004-2006 models) 4.0 L (4.2 US qt).
	Rotate tires, and check tire inflation and condition every 10,000 miles (16,000 km). Follow the pattern shown in the Owner's Manual.
B	Replace engine oil filter (see page 8-9) every 20,000 miles (32,000 km) or 1 year. Engine oil capacity with oil filter: K20A2 engine (2004 model) and K20Z1 engine (2005-2006 models) 4.7 L (5.0 US qt), K20A3 engine (2004-2006 models) 4.2 L (4.4 US qt).
	Check front and rear brake wear (see page 19-4) every 20,000 miles (32,000 km) or 1 year. • Check pads and discs for wear (thickness), damage, and cracks. • Check calipers for damage, leaks, and tightness of mount bolts.
	Check parking brake adjustment (see page 19-7) every 20,000 miles(32,000 km) or 1 year. Check the number of clicks (7 to 9) when the parking brake lever is pulled with 196 N (20 kgf, 44 lbf) of force.
	Inspect tie rod ends, steering gearbox, and gearbox boots (see page 17-8) every 20,000 miles (32,000 km) or 1 year. • Check rack grease and steering linkage. • Check boots for damage and leaking grease. • Check fluid lines for damage or leaks.
	Inspect suspension components (see page 18-3) every 20,000 miles (32,000 km) or 1 year. • Check bolts for tightness. • Check condition of ball joint boots for deterioration and damage.
	Inspect driveshaft boots (see page 16-4) every 20,000 miles (32,000 km) or 1 year. Check boots for cracks and boot bands for tightness.
	Inspect brake hoses and lines including ABS (see page 19-24) every 20,000 miles (32,000 km) or 1 year. Check the master cylinder, proportioning control valve, and ABS modulator-control unit for damage and leakage.
	Inspect all fluid levels and condition of fluids every 20,000 miles (32,000 km) or 1 year. • Manual transmission fluid (MTF) (see page 13-4). • Automatic transmission fluid (ATF-Z1) (see page 14-271). • Clutch fluid. • Engine coolant (see page 10-6). • Power steering fluid (see page 17-12). • Brake fluid (see page 19-8). • Windshield washer fluid.
	Inspect exhaust system (see page 9-14) every 20,000 miles (32,000 km) or 1 year.* Check catalytic converter heat shield, exhaust pipe, and muffler for damage, leak, and tightness (see page 9-15).
	Inspect fuel lines and connections (see page 11-368) every 20,000 miles (32,000 km) or 1 year.* Check for loose connections, cracks, and deterioration; retighten loose connections and replace damaged parts.
C	Inspect drive belt every 30,000 miles (48,000 km) or 2 years. Look for cracks and damage, then check the position of the drive belt auto-tensioner indicator (see page 4-43).
	Replace dust and pollen filter (see page 21-49) every 30,000 miles (48,000 km) or 2 years. Replace the filter whenever airflow from the heating and cooling/climate control system is less than normal.

NOTE: According to state and federal regulations, failure to do the maintenance items marked with an asterisk (*) will not void the customer's emissions warranties. However, Acura recommends that all maintenance services be done at the recommended intervals to ensure long-term reliability.

(cont'd)

Listed by Distance/Time for Normal Conditions (cont'd)

2004-2006 Models

Follow the Normal Schedule if the severe driving conditions specified in the Maintenance Schedule for Severe Conditions do not apply, and if only OCCASIONALLY driven in severe driving conditions. Follow the Severe Conditions schedule if the vehicle is driven MAINLY in Canada.

Do the items in parts A, B, C, D, E, F, and G as required for the mileage/time interval listed.

Part	Maintenance Items
D	Replace air cleaner element (see page 11-407) every 30,000 miles (48,000 km). Independent of time.
E	Replace spark plugs (see page 4-28) every 110,000 miles (176,000 km). Use IZFR6K11 (NGK) or SKJ20DR-M11 (DENSO) for K20A3 engine (2004-2006 models) and use IFR7G11K, IFR7G11KS (NGK) or SK22PR-M11, SK22PR-M11S (DENSO) for K20A2 engine (2004 model) and use IFR7G11KS (NGK) or SK22PR-M11S (DENSO) for K20Z1 engine (2005-2006 models): GAP 1.0—1.1 mm (0.039—0.043 in.).
	Inspect the valve clearance (see page 6-11) every 110,000 miles (176,000 km) otherwise adjust only if noisy. • K20A2 engine (2004 model), K20Z1 engine (2005-2006 models): Intake: 0.21—0.25 mm (0.008—0.010 in.), Exhaust: 0.25—0.29 mm (0.010—0.011 in.). • K20A3 engine (2004-2006 models): Intake: 0.21—0.25 mm (0.008—0.010 in.), Exhaust: 0.28—0.32 mm (0.011—0.013 in.).
F	Replace automatic transmission fluid (see page 14-272) at 120,000 miles (192,000 km) or 6 years, then replace every 90,000 miles (144,000 km) or 5 years. Capacity: 2.9 L (3.1 US qt), use ACURA ATF-Z1.
	Replace manual transmission fluid (see page 13-4) at 120,000 miles (192,000 km) or 6 years, then replace every 90,000 miles (144,000 km) or 5 years. Capacity: 1.5 L (1.6 US qt), use ACURA MTF.
G	Replace engine coolant (see page 10-6) at 120,000 miles (192,000 km) or 10 years, then every 60,000 miles (96,000 km) or 5 years. Capacity: M/T 5.1 L (1.35 US gal), A/T 5.0 L (1.32 US gal), use ACURA Long Life Antifreeze/coolant Type 2.

Listed by Distance/Time for Severe Conditions

2004-2006 Models

Use the Severe Conditions schedule if the vehicle is driven Mainly in Canada or in any of the following conditions. If only OCCASIONALLY driven in these conditions, use the Normal Conditions schedule.

Severe Driving Conditions

- Driving less than 5 miles (8 km) per trip or, in freezing temperatures, driving less than 10 miles (16 km) per trip.
- Driving in extremely hot over 90 °F (32 °C) conditions.
- Extensive idling, or long periods of stop-and-go driving, such as a taxi or a commericial delivery vehicle.
- Trailer towing, driving with a loaded roof rack, or driving in mountainous conditions.
- Driving on muddy, dusty, or de-iced roads.

Distance		Time	Maintenance Items
5,000 miles	8,000 km	———	Do item in A.
10,000 miles	16,000 km	1 year	Do items in A and B.
15,000 miles	24,000 km	———	Do items in A and C.
20,000 miles	32,000 km	1 year	Do items in A, B, and D.
25,000 miles	40,000 km	———	Do item in A.
30,000 miles	48,000 km	2 years	Do items in A, B, E, and F.
35,000 miles	56,000 km	———	Do item in A.
40,000 miles	64,000 km	2 years	Do items in A, B, and D.
45,000 miles	72,000 km	———	Do items in A and C.
50,000 miles	80,000 km	3 years	Do items in A and B.
55,000 miles	88,000 km	———	Do item in A.
60,000 miles	96,000 km	3 years	Do items in A, B, D, E, F, G, and H.
———	———	3 years	Replace brake fluid (see page 19-8). Use ACURA DOT 3 Brake Fluid.
65,000 miles	104,000 km	———	Do item in A.
70,000 miles	112,000 km	4 years	Do items in A and B.
75,000 miles	120,000 km	———	Do items in A and C.
80,000 miles	128,000 km	4 years	Do items in A, B, and D.
85,000 miles	136,000 km	———	Do item in A.
90,000 miles	144,000 km	5 years	Do items in A, B, E, F, and G.
95,000 miles	152,000 km	———	Do item in A.
100,000 miles	160,000 km	5 years	Do items in A, B, and D.

(cont'd)

Listed by Distance/Time for Severe Conditions (cont'd)

2004-2006 Models

Use the Severe Conditions schedule if the vehicle is driven MAINLY in Canada or in any of the following conditions. If only OCCASIONALLY driven in these conditions, use the Normal Conditions schedule.

Severe Driving Conditions
- Driving less than 5 miles (8 km) per trip or, in freezing temperatures, driving less than 10 miles (16 km) per trip.
- Driving in extremely hot over 90 °F (32 °C) conditions.
- Extensive idling, or long periods of stop-and-go driving, such as a taxi or a commercial delivery vehicle.
- Trailer towing, driving with a loaded roof rack, or driving in mountainous conditions.
- Driving on muddy, dusty, or de-iced roads.

Distance		Time	Maintenance Items
105,000 miles	168,000 km	———	Do items in A and C.
110,000 miles	176,000 km	———	Do items in I.
110,000 miles	176,000 km	6 years	Do items in A and B.
———	———	6 years	Replace brake fluid (see page 19-8). Use ACURA DOT 3 Brake Fluid.
115,000 miles	184,000 km	———	Do item in A.
120,000 miles	192,000 km	6 years	Do items in A, B, D, E, F, and H.
120,000 miles	192,000 km	7 years	Do item in G.
120,000 miles	192,000 km	10 years	Do item in J.
125,000 miles	200,000 km	———	Do item in A.
130,000 miles	208,000 km	———	Do items in A and B.
135,000 miles	216,000 km	———	Do items in A and C.
140,000 miles	224,000 km	7 years	Do items in A, B, and D.
145,000 miles	232,000 km	———	Do item in A.
150,000 miles	240,000 km	8 years	Do items in A, B, E, F, and G.
155,000 miles	248,000 km	———	Do item in A.
160,000 miles	256,000 km	———	Inspect idle speed (see page 11-348). Idle speed: K20A2 engine (2004 model) 700±50 rpm in neutral, K20A3 engine (2004-2006 M/T models) 700±50 rpm in neutral, K20A3 engine (2004-2006 A/T models) 700±50 rpm in N or P position, K20Z1 engine (2005-2006 Type S models) 700±50 rpm in neutral.
160,000 miles	256,000 km	9 years	Do items in A, B, and D.
———	———	9 years	Replace brake fluid (see page 19-8). Use ACURA DOT 3 Brake Fluid.

Do the items in parts A, B, C, D, E, F, G, H, I, and J as required for the mileage/time interval listed.

Part	Maintenance Items
A	Replace engine oil (see page 8-8) every 5,000 miles (8,000 km) or 6 months. Engine oil capacity without oil filter: K20A2 engine (2004 model), K20Z1 engine (2005-2006 models) 4.5 L (4.8 US qt), K20A3 engine (2004-2006 models) 4.0 L (4.2 US qt).
B	Replace engine oil filter (see page 8-9) every 10,000 miles (16,000 km) or 1 year. Engine oil capacity with oil filter: K20A2 engine (2004 model), K20Z1 engine (2005-2006 models) 4.7 L (5.0 US qt), K20A3 engine (2004-2006 models) 4.2 L (4.4 US qt).
	Check front and rear brake wear (see page 19-4) every 10,000 miles (16,000 km) or 1 year. • Check pads and discs for wear (thickness), damage, and cracks. • Check calipers for damage, leaks, and tightness of mount bolts.
	Lubricate all hinges, locks, and latches every 10,000 miles (16,000 km) or 1 year.
	Rotate tires, and check tire inflation and condition every 10,000 miles (16,000 km). Follow the pattern shown in the Owner's Manual.
	Inspect tie rod ends, steering gearbox, and gearbox boots (see page 17-8) every 10,000 miles (16,000 km) or 1 year. • Check rack grease and steering linkage. • Check boots for damage and leaking grease. • Check fluid lines for damage or leaks.
	Inspect suspension components (see page 18-3) every 10,000 miles (16,000 km) or 1 year. • Check bolts for tightness. • Check condition of ball joint boots for deterioration and damage.
	Inspect driveshaft boots (see page 16-4) every 10,000 miles (16,000 km) or 1 year. Check boots for cracks and boot bands for tightness.
C	Clean air cleaner element (see page 11-407) every 15,000 miles (24,000 km). Independent of time.
D	Check parking brake adjustment (see page 19-7) every 20,000 miles (32,000 km) or 1 year. Check the number of clicks (7 to 9) when the parking brake lever is pulled with 196 N (20 kgf, 44 lbf) of force.
	Inspect brake hoses and lines including ABS (see page 19-24) every 20,000 miles (32,000 km) or 1 year. Check the master cylinder, proportioning control valve, and ABS modulator-control unit for damage and leakage.
	Inspect all fluid levels and condition of fluids every 20,000 miles (32,000 km) or 1 year. • Manual transmission fluid (MTF) (see page 13-4). • Automatic transmission fluid (ATF-Z1) (see page 14-271). • Clutch fluid. • Engine coolant (see page 10-6). • Power steering fluid (see page 17-12). • Brake fluid (see page 19-8). • Windshield washer fluid.
	Inspect exhaust system (see page 9-14) every 20,000 miles (32,000 km) or 1 year.* Check catalytic converter heat shield, exhaust pipe, and muffler for damage, leaks, and tightness (see page 9-15).
	Inspect fuel lines and connections (see page 11-368) every 20,000 miles (32,000 km) or 1 year.* Check for loose connections, cracks, and deterioration; retighten loose connections and replace damaged parts.
	Check lights and controls every 20,000 miles (32,000 km) or 1 year. Check function of interior and exterior lights (see page 22-78), and position of the headlights (see page 22-88).
	Inspect vehicle underbody every 20,000 miles (32,000 km) or 1 year. Check the paint for damage, scratches, stone chipping, and dents.

NOTE: According to state and federal regulations, failure to do the maintenance items marked with an asterisk (*) will not void the customer's emissions warranties. However, Acura recommends that all maintenance services be done at the recommended intervals to ensure long-term reliability.

(cont'd)

Listed by Distance/Time for Severe Conditions (cont'd)

2004-2006 Models

Use the Severe Conditions schedule if the vehicle is driven MAINLY in Canada or in any of the following conditions. If only OCCASIONALLY driven in these conditions, use the Normal Conditions schedule.

Severe Driving Conditions
- Driving less than 5 miles (8 km) per trip or, in freezing temperatures, driving less than 10 miles (16 km) per trip.
- Driving in extremely hot over 90 ℉ (32 ℃) conditions.
- Extensive idling, or long periods of stop-and-go driving, such as a taxi or a commercial delivery vehicle.
- Trailer towing, driving with a loaded roof rack, or driving in mountainous conditions.
- Driving on muddy, dusty, or de-iced roads.

Do the items in parts A, B, C, D, E, F, G, H, I, and J as required for the mileage/time interval listed.

Part	Maintenance Items
E	Inspect drive belt every 30,000 miles (48,000 km) or 2 years. Look for cracks and damage, then check the position of the drive belt auto-tensioner indicator (see page 4-43).
	Replace dust and pollen filter (see page 21-49) every 30,000 miles (48,000 km) or 2 years. Replace the filter twice as often (at 15,000 miles/24,000 km intervals) if the vehicle is driven mostly in urban areas that have high concentrations of soot in the air from industry and diesel-powered vehicles; also replace the dust and pollen filter anytime airflow is less than usual.
F	Replace air cleaner element (see page 11-407) every 30,000 miles (48,000 km). • Independent of time. • In dusty conditions, replace every 15,000 miles (24,000 km).
G	Replace automatic transmission fluid (see page 14-272) at 60,000 miles (96,000 km) or 3 years, then replace every 30,000 miles (48,000 km) or 2 years. Capacity: 2.9 L (3.1 US qt), use ACURA ATF-Z1.
H	Replace manual transmission fluid (see page 13-4) every 60,000 miles (96,000 km) or 3 years. Capacity: 1.5 L (1.6 US qt), use ACURA MTF.
I	Replace spark plugs (see page 4-28) every 110,000 miles (176,000 km). Use IZFR6K11 (NGK) or SKJ20DR-M11 (DENSO) for K20A3 engine (2004-2006 models) and use IFR7G11K,IFR7G11KS (NGK) or SK22PR-M11, SK22PR-M11S (DENSO) for K20A2 engine (2004 model) and use IFR7G11KS (NGK) or SK22PR-M11S (DENSO) for K20Z1 engine (2005-2006 models): GAP 1.0—1.1 mm (0.039—0.043 in.).
	Inspect the valve clearance (see page 6-11) every 110,000 miles (176,000 km) otherwise adjust only if noisy. • K20A2 engine (2004 model), K20Z1 engine (2005-2006 models): Intake: 0.21—0.25 mm (0.008—0.010 in.), Exhaust: 0.25—0.29 mm (0.010—0.011 in.). • K20A3 engine (2004-2006 models): Intake: 0.21—0.25 mm (0.008—0.010 in.), Exhaust: 0.28—0.32 mm (0.011—0.013 in.).
J	Replace engine coolant (see page 10-6) at 120,000 miles (192,000 km) or 10 years, then every 60,000 miles (96,000 km) or 5 years. Capacity: M/T 5.1 L (1.35 US gal), A/T 5.0 L (1.32 US gal), use ACURA Long Life Antifreeze/coolant Type 2.

Engine Electrical

Engine Electrical
Special Tools 4-2

Starting System
Component Location Index 4-3
Symptom Troubleshooting Index 4-4
Circuit Diagram 4-5
Starter Circuit Troubleshooting 4-6
Clutch Interlock Switch Test ... 4-8
Starter Solenoid Test 4-8
Starter Performance Test 4-9
Starter Removal and Installation 4-11
Starter Overhaul 4-14

Ignition System
Component Location Index 4-22
Circuit Diagram 4-23
Ignition Timing Inspection 4-25
Ignition Coil Removal/ Installation 4-26
Ignition Coil Relay Circuit Troubleshooting 4-26
Spark Plug Inspection 4-28

Charging System
Component Location Index 4-29
Symptom Troubleshooting Index 4-30
Circuit Diagram 4-31
Charging System Indicator Circuit Troubleshooting 4-32
Alternator and Regulator Circuit Troubleshooting 4-39
Alternator Control Circuit Troubleshooting 4-40
Drive Belt Inspection 4-43
Drive Belt Replacement 4-43
Drive Belt Auto-tensioner Inspection 4-44
Drive Belt Auto-tensioner Replacement 4-45
Alternator Removal and Installation 4-46
Alternator Overhaul
K20A3 engine 4-48
K20A2, K20Z1 engines 4-53

Cruise Control
Component Location Index 4-59
Symptom Troubleshooting Index 4-60
Circuit Diagram 4-62
Cruise Control Communication Circuit Troubleshooting (A/T) 4-63
* Cruise Control Unit Input Test 4-64
Cruise Control Main Switch Test/Replacement 4-67
* Cruise Control Set/decel, Resume/accel, Cancel Switch Test/Replacement 4-68
Cruise Control Actuator Test 4-68
Cruise Control Actuator/ Cable Replacement 4-69
Actuator Cable Adjustment 4-71
Clutch Pedal Position Switch Test 4-71

Special Tools

Ref. No.	Tool Number	Description	Qty
①	07746-0010300	Attachment, 42 x 47 mm	1
②	07749-0010000	Driver	1

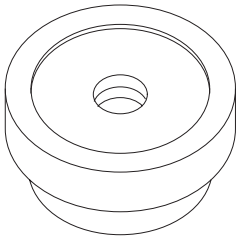

①

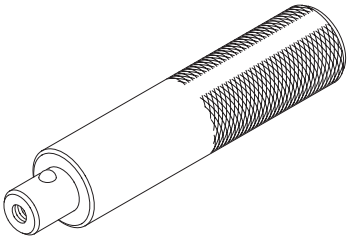

②

Component Location Index

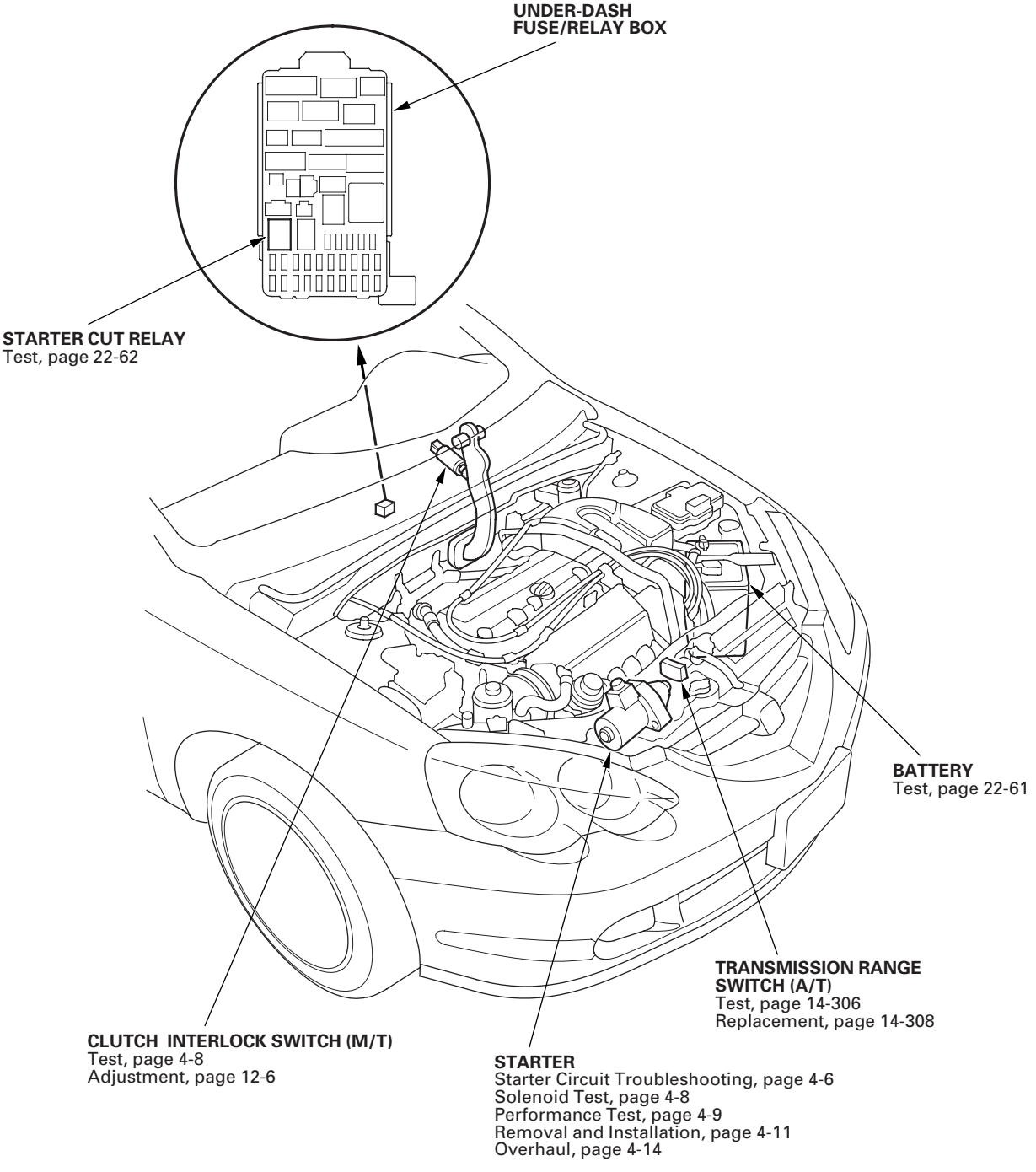

Symptom Troubleshooting Index

Symptom	Diagnostic procedure	Also check for
Engine does not start (does not crank)	1. Check for loose battery terminals or connections. 2. Test the battery for a low charge (see page 22-61). 3. Check the starter (see page 4-6). 4. Check the starter cut relay (see page 22-62). 5. Check the transmission range switch (A/T) (see page 14-306). 6. Check the clutch interlock switch (M/T) (see page 4-8). 7. Check the ignition switch or wire (see page 22-64).	Poor ground at G101 (A/T) or G402 (M/T)
Engine cranks, but does not start	1. Check for PGM-FI DTCs (see page 11-3). 2. Check the fuel pressure. • 2002-2004 models (see page 11-375) • 2005-2006 models (see page 11-376) 3. Check for a plugged or damaged fuel line (see page 11-365). 4. Check for a plugged fuel filter. • 2002-2004 models (see page 11-374) • 2005-2006 models (see page 11-374) 5. Check the throttle body (see page 11-403). 6. Check for low engine compression (see page 6-6). 7. Check for a damaged or broken cam chain.	
Engine is hard to start	1. Check for PGM-FI DTCs (see page 11-3). 2. Check the fuel pressure. • 2002-2004 models (see page 11-375) • 2005-2006 models (see page 11-376) 3. Check for a plugged or damaged fuel line (see page 11-365). 4. Check for a plugged fuel filter. • 2002-2004 models (see page 11-374) • 2005-2006 models (see page 11-374)	
Engine cranks slowly	1. Check for loos batte terminals or connections. 2. Test the battery for a low charge (see page 22-61). 3. Check the starter for binding (see page 4-6). 4. Check for an excessive drag in the engine	

Circuit Diagram

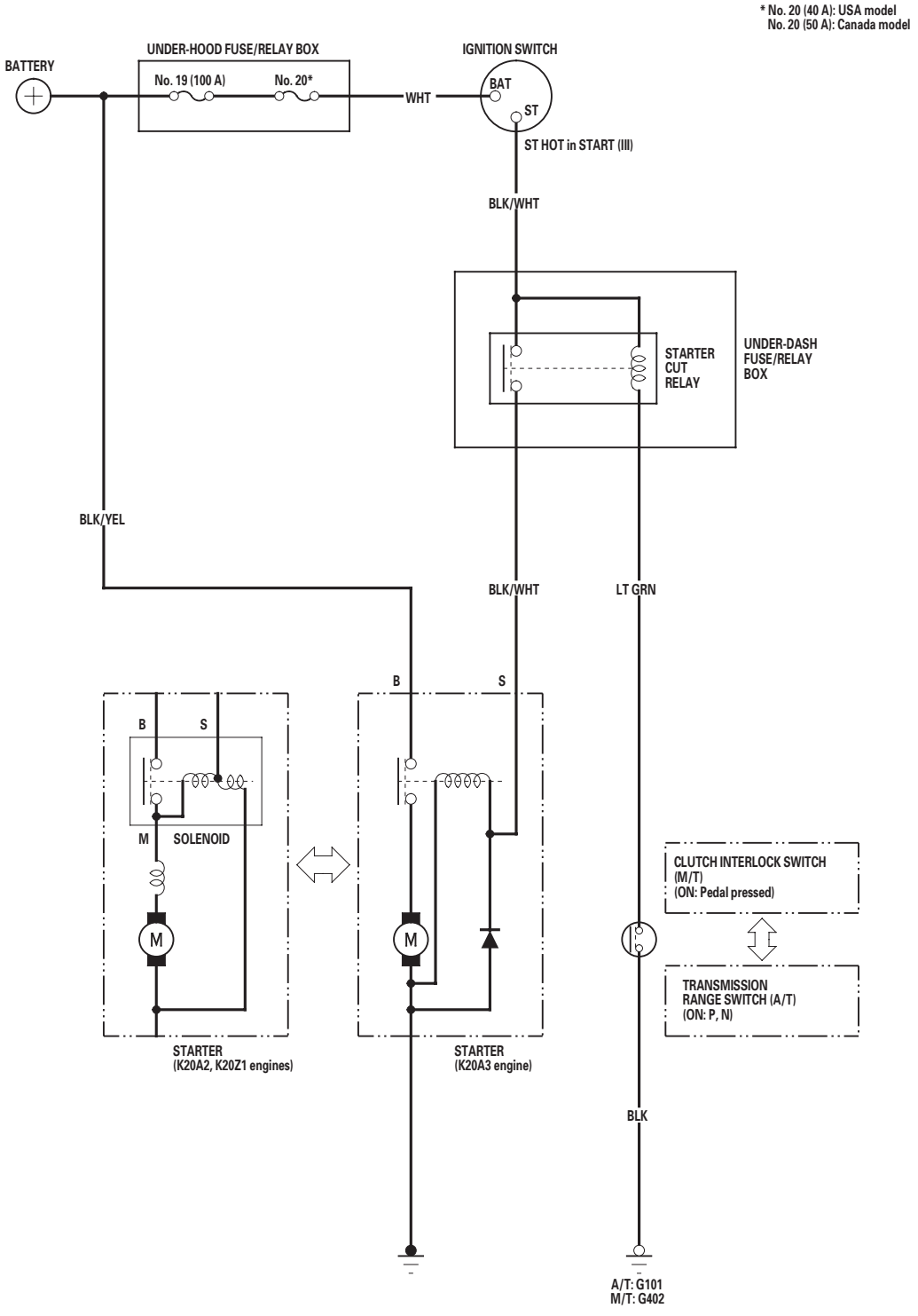

Starter Circuit Troubleshooting

NOTE:
- Air temperature must be between 59 and 100 °F (15 and 38 °C) during this procedure.
- On 2002-2004 models: After this inspection, or any subsequent repair, reset the engine control module (ECM)/powertrain control module (PCM) to clear any diagnostic trouble codes (DTCs) (see page 11-4).
- On 2005-2006 models: After this inspection, you must select ECM/PCM reset using the Honda Diagnostic System (HDS) (see page 11-4), otherwise the ECM/PCM continues to stop the fuel injectors.
- The battery must be in good condition and fully charged.
- If you disconnect the battery, do the ECM/PCM idle learn procedure.
  – 2002-2004 models (see page 11-349)
  – 2005-2006 models (see page 11-349)

Recommended Procedure
- Use a starter system tester.
- Connect and operate the equipment in accordance with the manufacturer's instructions.

Alternate Procedure

1. Hook up the following equipment:

   - Ammeter, 0—400 A
   - Voltmeter, 0—20 V (accurate within 0.1 V)
   - Tachometer, 0—1,200 rpm

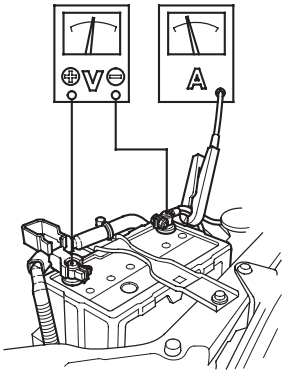

2. 2002-2004 models: Remove the No. 17 (15 A) fuse from the under-dash fuse/relay box.
   2005-2006 models: Connect the HDS to the data link connector (DLC) (see step 2 on page 11-3). Turn the ignition switch ON (II), then select PGM-FI, INSPECTION, and then All INJECTORS OFF on the HDS.

3. With the shift lever in N or P (A/T) or the clutch pedal pressed (M/T), turn the ignition switch to START (III).

   Did the starter crank the engine normally?

   YES—The starting system is OK. Go to step 9.

   NO—Go to step 4.

4. Check the battery condition. Check electrical connections at the battery, the negative battery cable to body, the engine ground cables and the starter for looseness and corrosion. Then try cranking the engine again.

   Did the starter crank the engine?

   YES—Repairing the loose connection corrected the problem. The starting system is OK. Go to step 9.

   NO—Check the following:

   - If the starter will not crank the engine at all, go to step 5.
   - If it cranks the engine erratically or too slowly, go to step 7.
   - If it won't disengage from the flywheel or torque converter ring gear when you release the key, check the following:■
     – Solenoid plunger and switch malfunction
     – Dirty drive gear or damaged overruning clutch

5. Make sure the transmission is in Neutral, then disconnect the BLK/WHT wire (A) from the starter solenoid S terminal (B). Connect a jumper wire from the battery positive terminal to the solenoid terminal.

K20A3 engine

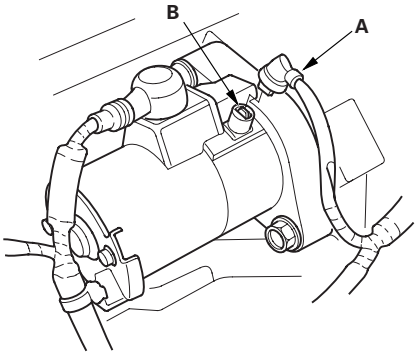

K20A2, K20Z1 engines

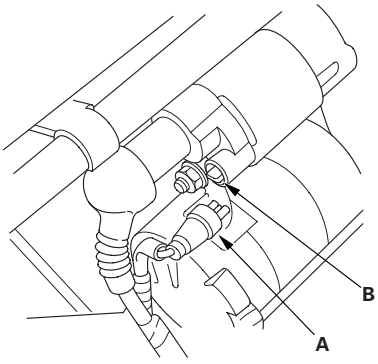

Did the starter crank the engine?

YES—Check the following items in the order listed until you find the open circuit: ■

- The BLK/WHT wire and connectors between the under-dash fuse/relay box and the ignition switch, and between the under-dash fuse/relay box and the starter.
- The ignition switch (see page 22-64).
- The transmission range switch and connector (A/T) or the clutch interlock switch and connector (M/T).
- The starter cut relay (see page 22-62).

NO—Remove the starter, and repair or replace as necessary. ■

6. While cranking the engine, check the cranking voltage and current draw.

   Is cranking voltage greater than or equal to 8.5 V (K20A3 engine)/8.7 V (K20A2, K20Z1 engines) and current draw less than or equal to 350 A (K20A3 engine)/230 A (K20A2, K20Z1 engines)?

   YES—Go to step 7.

   NO—Replace the starter, or remove and disassemble it, and check the following: ■

   - Drag in the starter armature
   - Shorted armature winding
   - Excessive drag in engine

7. Check the engine speed while cranking the engine.

   Is the engine speed above 100 rpm?

   YES—Go to step 9.

   NO—Replace the starter, or remove and disassemble it, and check the following until you find the cause: ■

   - Open circuit in starter armature commutator segments
   - Excessively worn starter brushes
   - Open circuit in commutator brushes
   - Dirty or damaged helical splines or drive gear
   - Faulty drive gear clutch

8. Remove the starter, and inspect its drive gear and the flywheel or torque converter ring gear for damage. Replace any damaged parts.

9. 2002-2004 models: Reinstall the No. 17 (15 A) fuse in the under-dash fuse/relay box.
   2005-2006 models: Select ECM/PCM reset (see page 11-5) to stop the ALL INJECTORS OFF function on the HDS.

Clutch Interlock Switch Test

1. Disconnect the clutch interlock switch 2P connector.

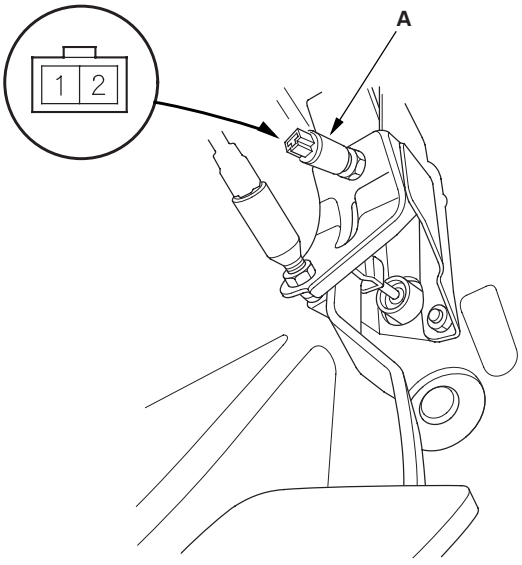

2. Remove the clutch interlock switch (A).

3. Check for continuity between the terminals according to the table.

   - If the continuity is not as specified, replace the clutch interlock switch.
   - If OK, install clutch interlock switch and adjust the clutch pedal height (see page 12-6).

Terminal / Clutch Interlock Switch	1	2
PRESSED	○	○
RELEASED		

Starter Solenoid Test

K20A2, K20Z1 Engines

1. Make sure you have the anti-theft codes for the radio, then write down the customer's radio station presets.

2. Disconnect the nagative cable from the battery first, then disconnect the positive cable.

3. Disconnect the S and M connectors from the starter solenoid.

4. Check the hold-in coil for continuity between the S terminal and the armature housing (ground). There should be continuity.

   - If there is continuity, go to step 5.
   - If there is no continuity, replace the solenoid.

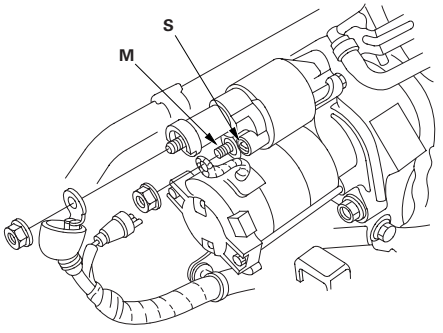

5. Check the pull-in coil for continuity between the S terminal and M terminal . There should be continuity.

   - If there is continuity, the solenoid is OK.
   - If there is no continuity, replace the solenoid.

6. Connect the positive cable to the battery first, and then the nagative cable.

7. Enter the anti-theft codes for the radio, then enter the customer's radio station presets.

8. Set the clock.

9. K20A2 engine: Do the engine control module (ECM)/powertrain control module (PCM) idel learn procedure.

   - 2002-2004 models (see page 11-349)
   - 2005-2006 models (see page 11-349)

10. Do the power window control unit reset procedure (see page 22-148).

Clutch Interlock Switch Test

1. Disconnect the clutch interlock switch 2P connector.

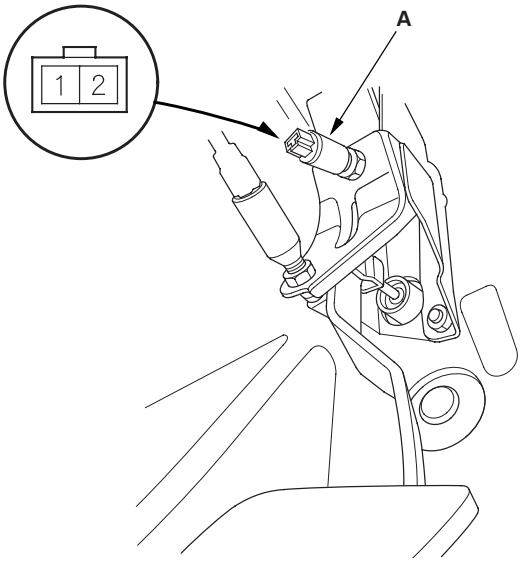

2. Remove the clutch interlock switch (A).

3. Check for continuity between the terminals according to the table.

   - If the continuity is not as specified, replace the clutch interlock switch.
   - If OK, install clutch interlock switch and adjust the clutch pedal height (see page 12-6).

Terminal / Clutch Interlock Switch	1	2
PRESSED	○	○
RELEASED		

Starter Solenoid Test

K20A2, K20Z1 Engines

1. Make sure you have the anti-theft codes for the radio, then write down the customer's radio station presets.

2. Disconnect the nagative cable from the battery first, then disconnect the positive cable.

3. Disconnect the S and M connectors from the starter solenoid.

4. Check the hold-in coil for continuity between the S terminal and the armature housing (ground). There should be continuity.

   - If there is continuity, go to step 5.
   - If there is no continuity, replace the solenoid.

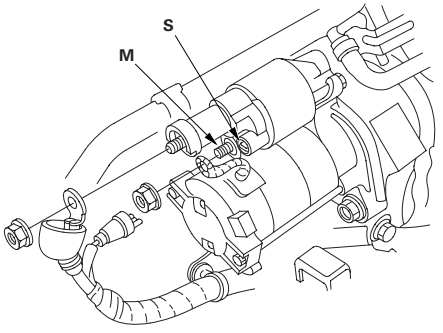

5. Check the pull-in coil for continuity between the S terminal and M terminal . There should be continuity.

   - If there is continuity, the solenoid is OK.
   - If there is no continuity, replace the solenoid.

6. Connect the positive cable to the battery first, and then the nagative cable.

7. Enter the anti-theft codes for the radio, then enter the customer's radio station presets.

8. Set the clock.

9. K20A2 engine: Do the engine control module (ECM)/powertrain control module (PCM) idel learn procedure.

   - 2002-2004 models (see page 11-349)
   - 2005-2006 models (see page 11-349)

10. Do the power window control unit reset procedure (see page 22-148).

Starter Performance Test

K20A3 Engine

1. Disconnect the wire from the S terminal.

2. Make the connections as shown using as heavy a wire as possible (preferably equivalent to the wire used for the vehicle). To avoid damaging the starter, never leave the battery connected for more than 10 seconds.

3. Connect the battery as shown. If the starter pinion moves out, it is working properly.

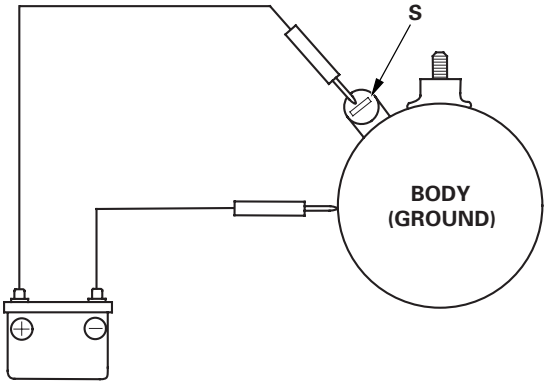

4. Disconnect the negative battery terminal from the body as shown. If the pinion retracts immediately, it is working properly.

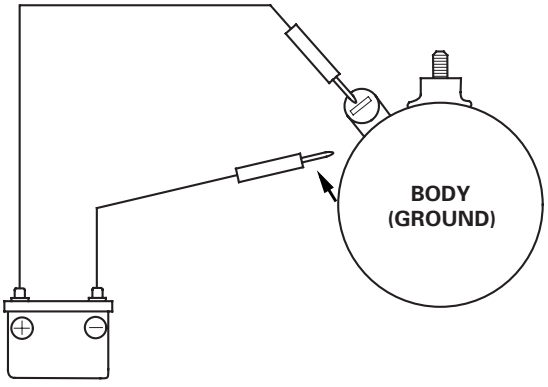

5. Clamp the starter firmly in a vise.

6. Connect the starter to the battery as shown, and make sure the motor turns and keeps rotating.

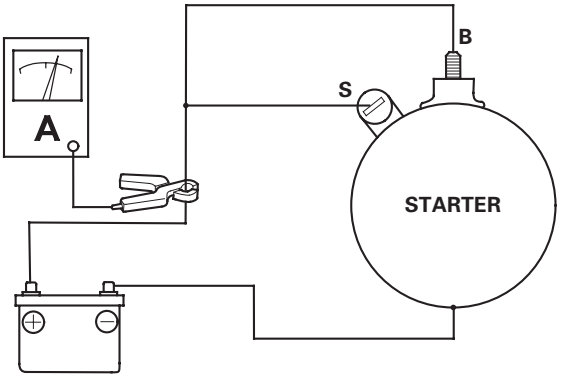

7. If the electric current and motor speed meet the specifications when the battery voltage is at 11.5 V, the starter is working properly.

   Specifications
   Electric current: 80 A or less
   Motor speed: 2,600 rpm or more

Starter Performance Test (cont'd)

K20A2, K20Z1 Engines

1. Disconnect the wires from the S terminal and the M terminal.

2. Make the connections as shown using as heavy a wire as possible (preferably equivalent to the wire used for the vehicle). To avoid damaging the starter, never leave the battery connected for more than 10 seconds.

3. Connect the battery as shown. Make sure you disconnect the starter motor wire from the solenoid. If the starter pinion moves out, it is working properly.

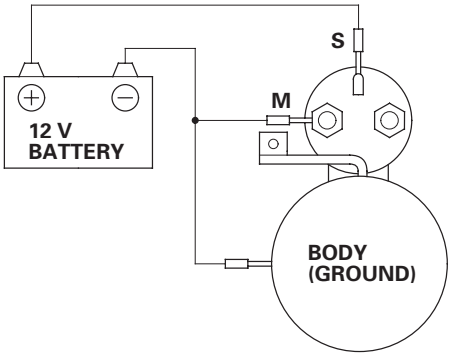

4. Disconnect the negative battery terminal from the M terminal as shown. If the pinion does not retract, the hold-in coil of the solenoid is working properly.

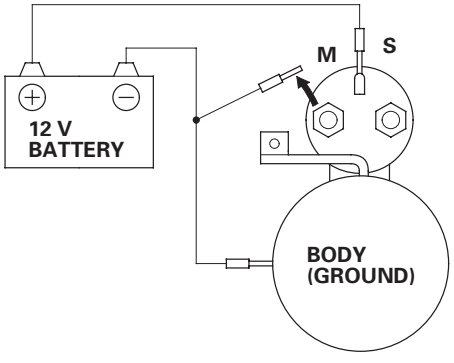

5. Disconnect the negative battery terminal from the body as shown. If the pinion retracts immediately, it is working properly.

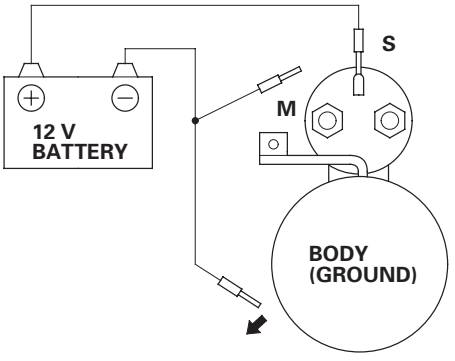

6. Clamp the starter firmly in a vise.

7. Reconnect the wire to the M terminal.

8. Connect the starter to the battery as shown in the diagram, and make sure the motor turns and keeps rotating.

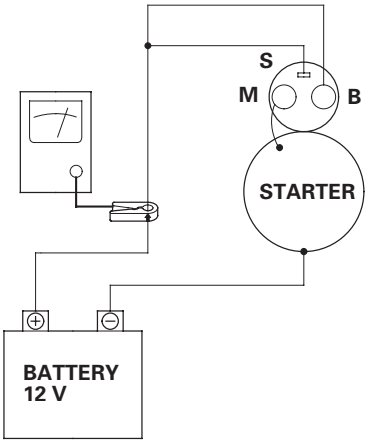

9. If the electric current and motor speed meet the specifications when the battery voltage is at 11.5 V, the starter is working properly.

   Specifications
   Electric Current: 90 A or less
   Motor Speed: 3,000 rpm or more

Starter Removal and Installation

Removal

1. Make sure you have the anti-theft codes for the radio, then write down the customer's radio station presets.

2. Disconnect the negative cable from the battery first, then disconnect the positive cable.

3. Remove the intake manifold.

4. Disconnect the knock sensor connector.

5. K20A3 engine: Disconnect the bolt securing the harness bracket.

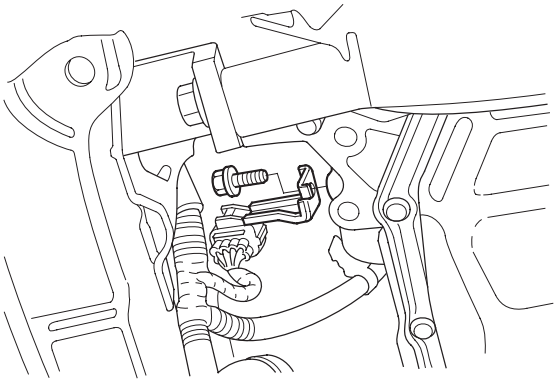

6. K20A2, K20Z1 engines: Remove the front subframe damper.

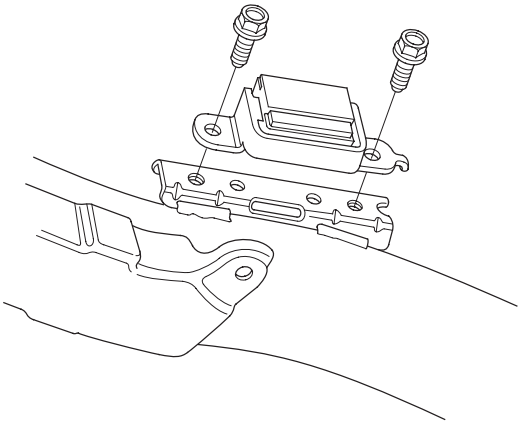

7. K20A2, K20Z1 engines: Remove the bolt (A) securing the harness bracket, then remove the intake manifold brackets (B).

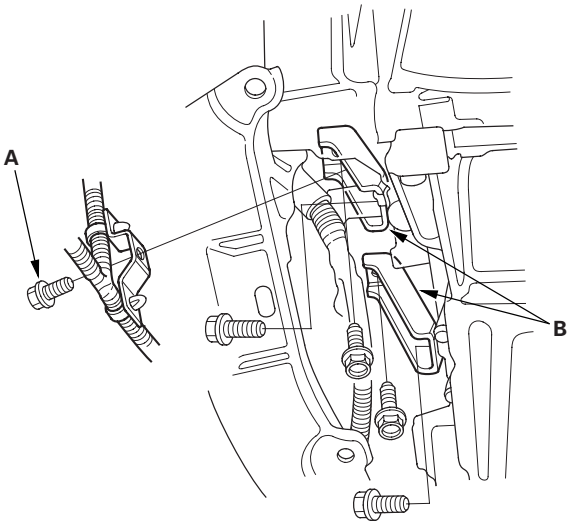

(cont'd)

Starter Removal and Installation (cont'd)

8. Disconnect the starter cable (A) from the B terminal on the solenoid, then disconnect the BLK/WHT wire (B) from the S terminal.

K20A3 engine

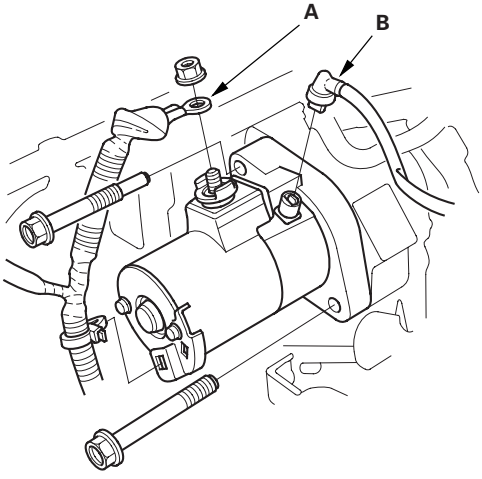

K20A2, K20Z1 engines

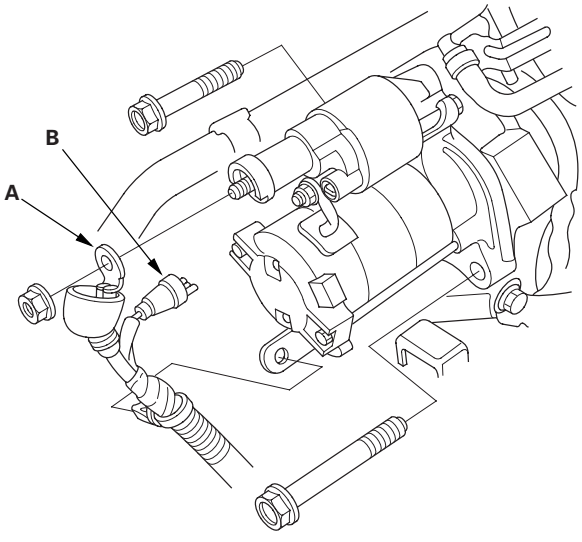

9. Remove the two bolts holding the starter, then remove the starter.

Installation

1. Install the two bolts holding the starter.

2. Connect the starter cable (A) from the B terminal on the solenoid, then connect the BLK/WHT wire (B) from the S terminal. Make sure the crimped side of the ring terminal is facing out.

K20A3 engine

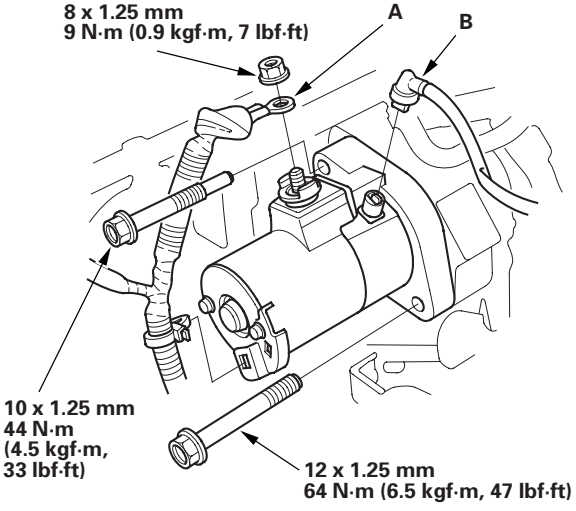

K20A2, K20Z1 engines

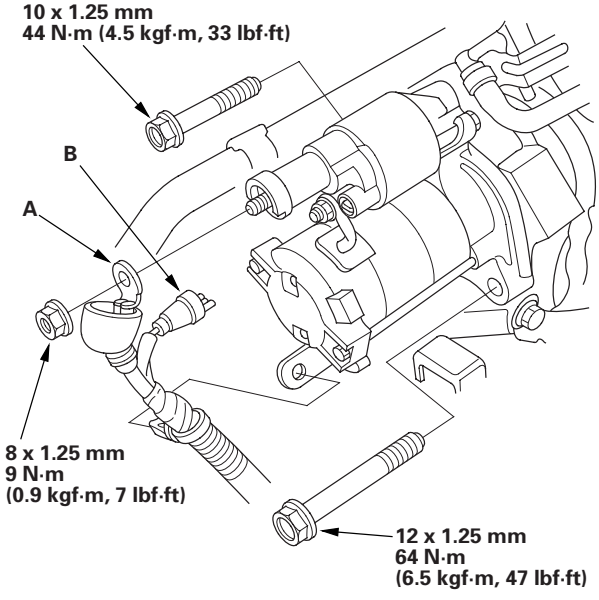

3. K20A2, K20Z1 engines: Install the bolt (A) securing the harness bracket, then Install the intake manifold brackets (B).

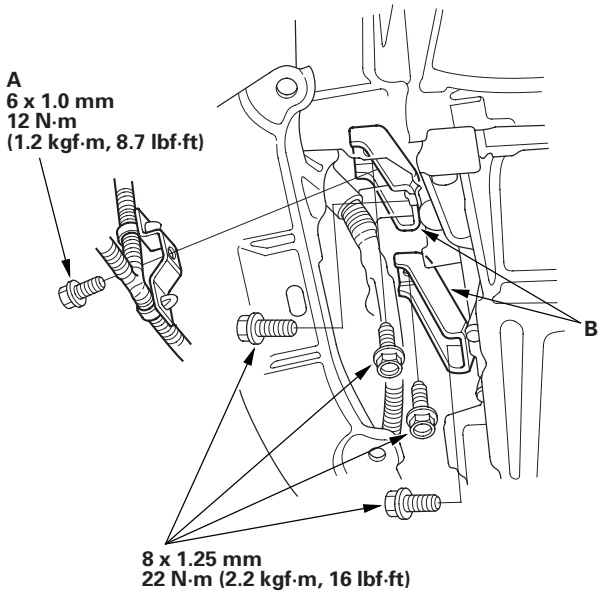

4. K20A2, K20Z1 engines: Install the front subframe damper.

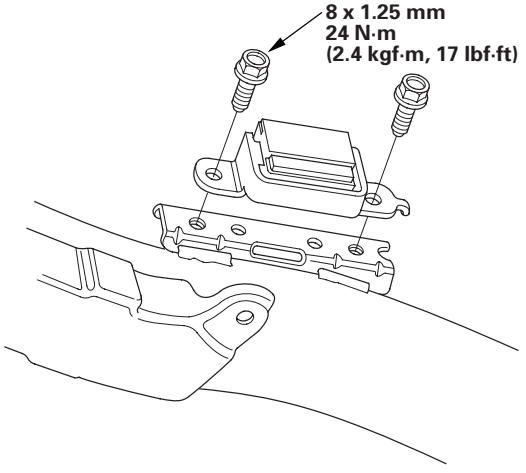

5. K20A3 engine: Connect the bolt securing the harness bracket.

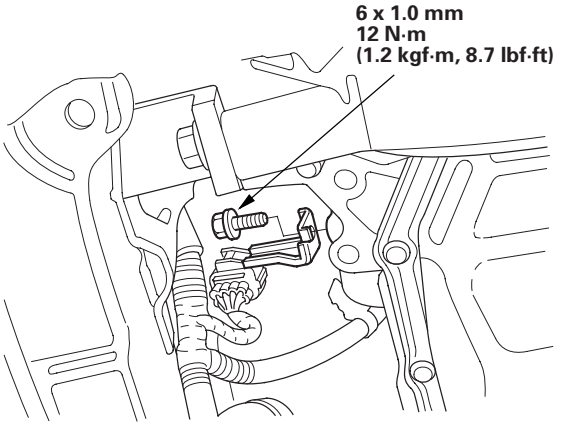

6. Connect the knock sensor connector.
7. Install the intake manifold.
8. Connect the positive cable to the battery first, then connect the negative cable.
9. Start the engine to make sure the starter operates properly.
10. Enter the anti-theft codes for the radio, then enter the customer's radio station presets.
11. Set the clock.
12. 2002-2004 models: Do the engine control module (ECM) /powertrain control module (PCM) idle learn procedure (see page 11-349).
13. Do the power window control unit reset procedure (see page 22-148).

Starter Overhaul

Disassembly/Reassembly - K20A3 Engine

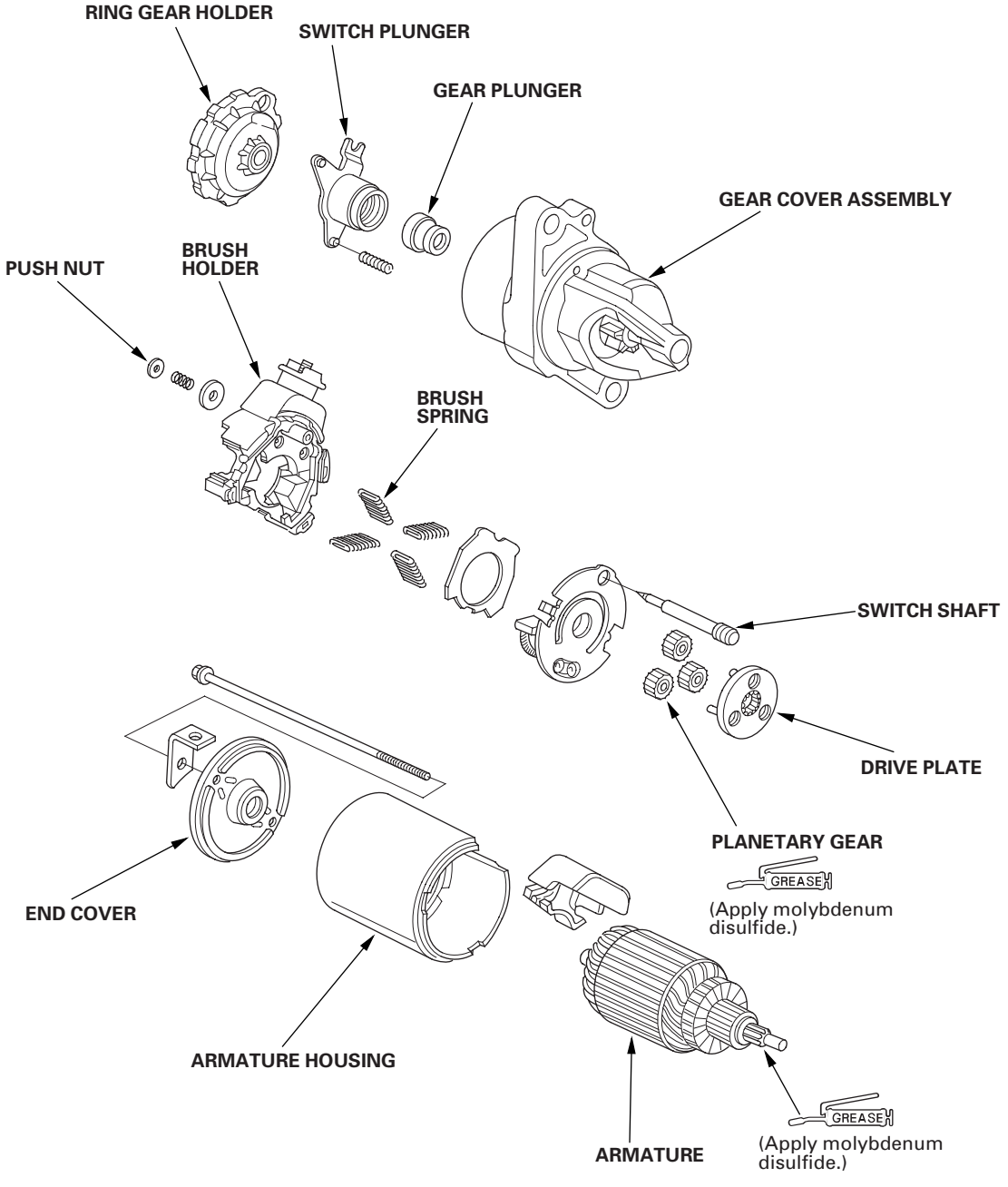

Disassembly/Reassembly - K20A2, K20Z1 Engines

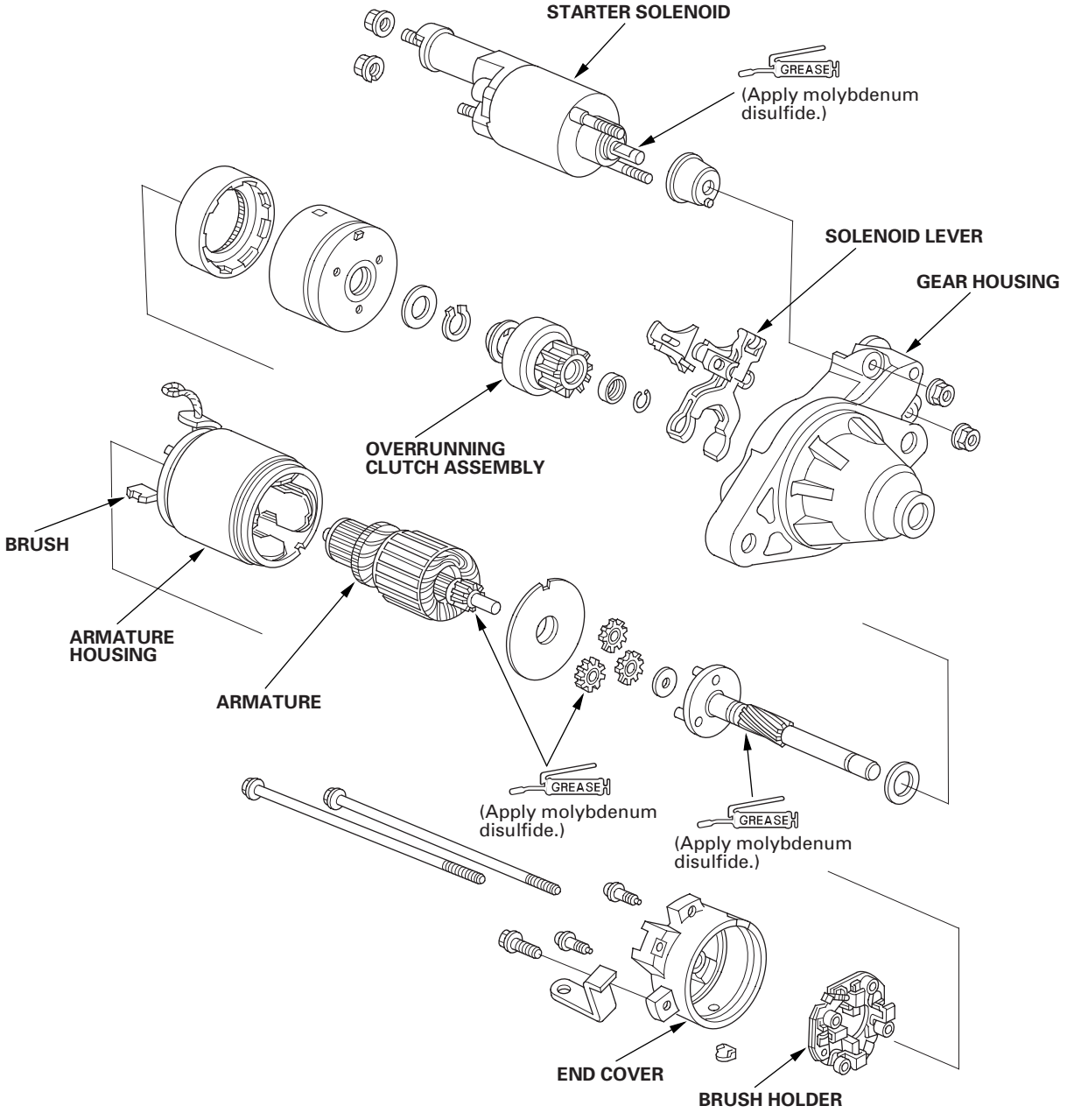

(cont'd)

Starter Overhaul (cont'd)

Armature Inspection and Test

1. Remove the starter (see page 4-11).

2. Disassemble the starter as shown at the beginning of this procedure.

3. Inspect the armature for wear or damage from contact with the permanent magnet. If there is wear or damage, replace the armature.

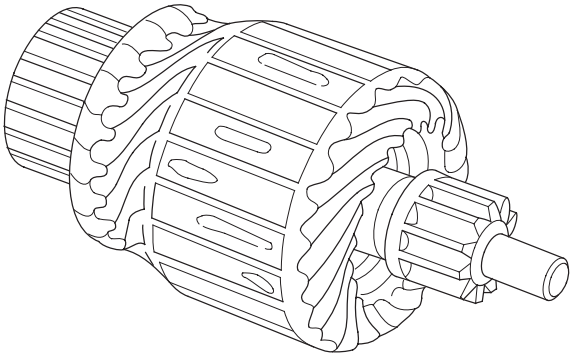

4. Check the commutator (A) surface. If the surface is dirty or burnt, resurface with emery cloth or a lathe within the following specifications, or recondition with #500 or #600 sandpaper (B).

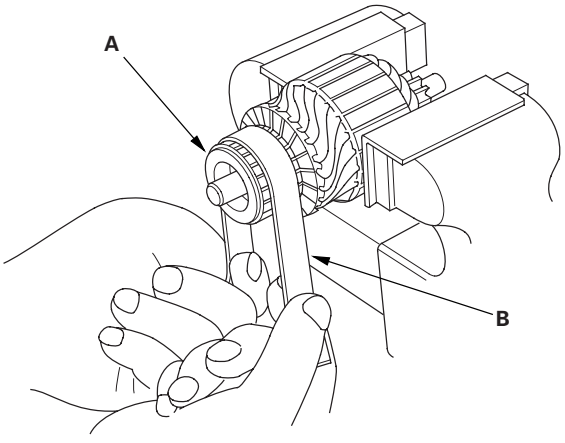

5. Check the commutator diameter. If the diameter is below the service limit, replace the armature.

Commutator Diameter
K20A3 Engine:
Standard (New): 28.0—28.1 mm (1.102—1.106 in.)
Service Limit: 27.5 mm (1.083 in.)
K20A2, K20Z1 Engines:
Standard (New): 28.0 mm (1.10 in.)
Service Limit: 27.0 mm (1.06 in.)

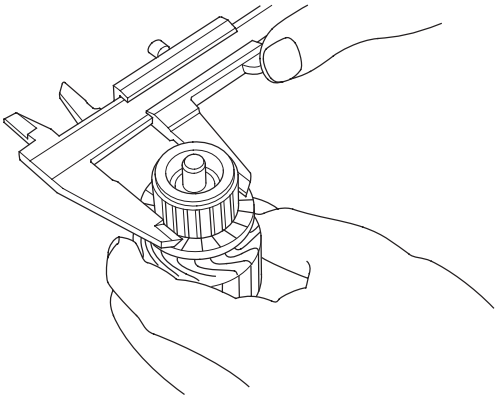

6. Measure the commutator (A) runout.

- If the commutator runout is within the service limit, check the commutator for carbon dust or brass chips between the segments.
- If the commutator runout is not within the service limit, replace the armature.

Commutator Runout
Standard (New): 0.02 mm (0.001 in.) max.
Service Limit: 0.05 mm (0.002 in.)

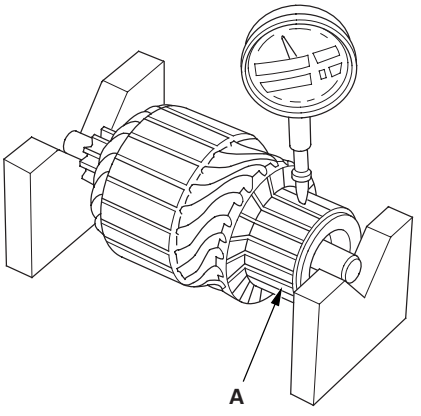

7. Check the mica depth (A). If the mica is too high (B), undercut the mica with a hacksaw blade to the proper depth. Cut away all the mica (C) between the commutator segments. The undercut should not be too shallow, too narrow, or V-shaped (D).

   Commutator Mica Depth
   K20A3 Engine:
   Standard (New): 0.40—0.50 mm (0.016—0.020 in.)
   Service Limit: 0.15 mm (0.006 in.)
   K20A2, K20Z1 Engines:
   Standard (New): 0.50—0.80 mm (0.020—0.031 in.)
   Service Limit: 0.20 mm (0.008 in.)

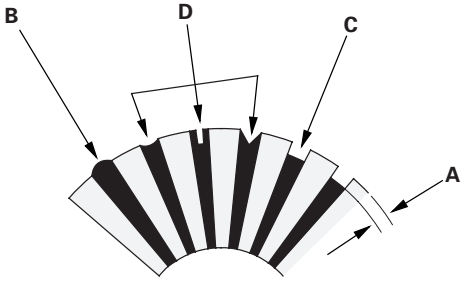

8. Check for continuity between the segments of the commutator. If there is an open circuit between any segments, replace the armature.

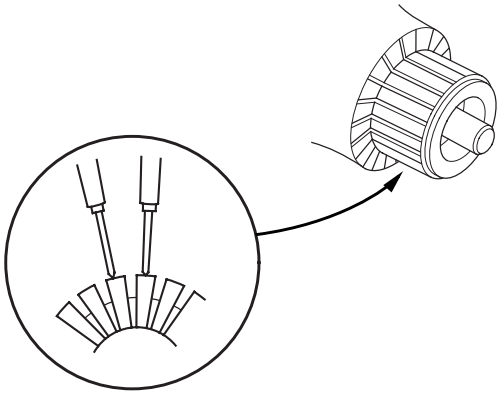

9. Place the armature (A) on an armature tester (B). Hold a hacksaw blade (C) on the armature core. If the blade is attracted to the core or vibrates while the core is turned, the armature is shorted. Replace the armature.

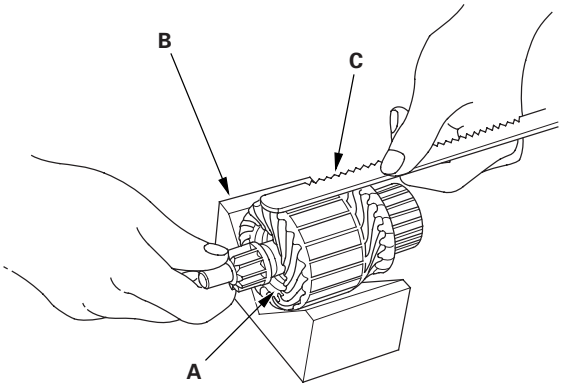

10. Check with an ohmmeter for continuity between the commutator (A) and armature coil core (B), and between the commutator and armature shaft (C). If there is continuity, replace the armature.

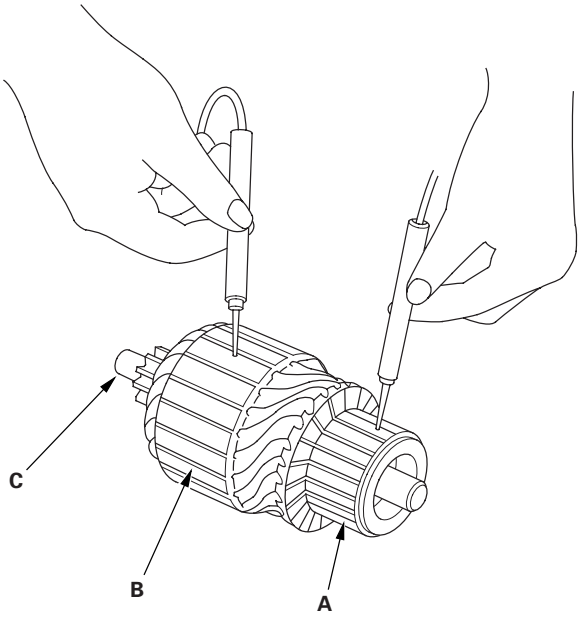

(cont'd)

Starter Overhaul (cont'd)

Starter Brush Inspection

11. Measure the brush length. If it is not within the service limit, replace the brush holder assembly.

    Brush Length
    K20A3 Engine:
    Standard (New): 11.1—11.5 mm (0.44—0.45 in.)
    Service Limit: 4.3 mm (0.17 in.)
    K20A2, K20Z1 Engines:
    Standard (New): 14.0—14.5 mm (0.55—0.57 in.)
    Service Limit: 9.0 mm (0.35 in.)

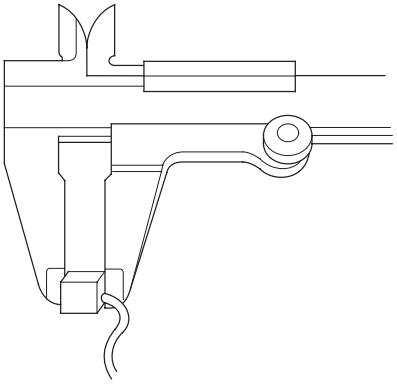

Starter Field Winding Test (K20A2, K20Z1 Engines)

12. Check for continuity between the brushes (A). If there is no continuity, replace the armature housing (B).

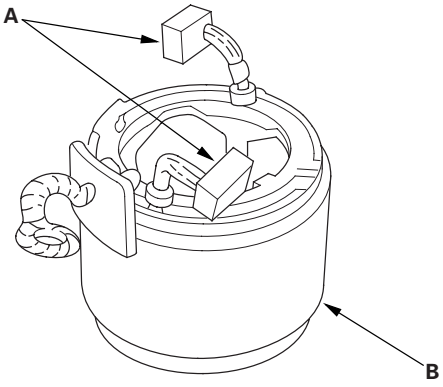

13. Check for continuity between each brush (A) and the armature housing (B). If there is continuity, replace the armature housing.

Starter Brush Holder Test

14. Check for continuity between the (+) brush holder (A) and (—) brush holder (B). If there is continuity, replace the brush holder assembly.

K20A3 engine

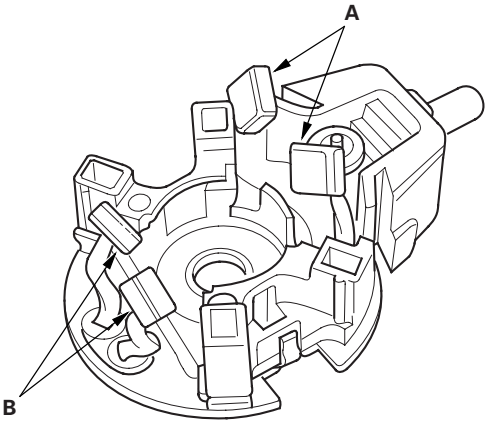

K20A2, K20Z1 engines

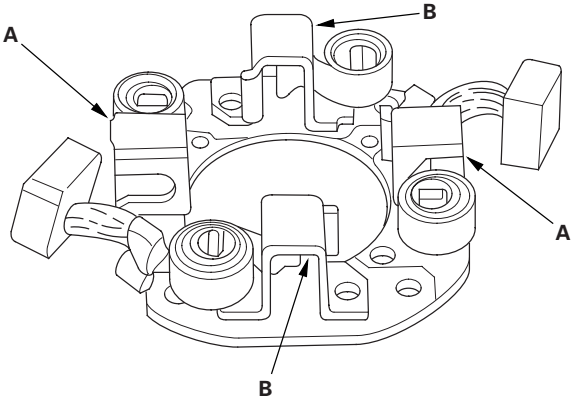

Brush Spring Inspection (K20A2, K20Z1 Engines)

15. Insert the brush (A) into the brush holder, and bring the brush into contact with the commutator, then attach a spring scale (B) to the spring (C). Measure the spring tension at the moment the spring lifts off the brush. If the spring tension is not within specification, replace the spring.

    Spring Tension: 13.7—17.7 N (1.40—1.80 kgf, 3.09—3.97 lbf)

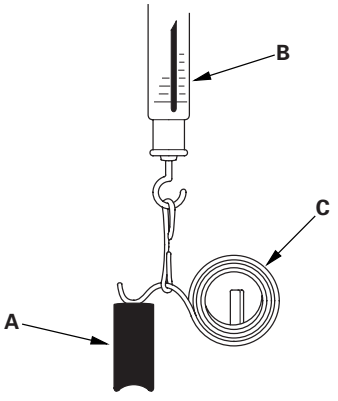

Planetary Gear Inspection

16. Check the planetary gears (A) and ring gear (B). Replace them if they are worn or damaged.

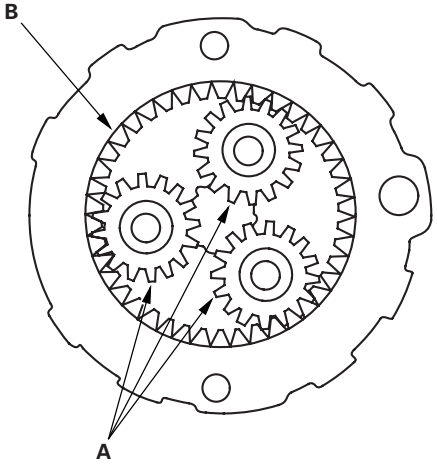

Overrunning Clutch Inspection (K20A3 Engine)

17. Holding the drive gear (A), turn the gear shaft (B) clockwise. Check that the drive gear comes out to the other end. If the drive gear does not move smoothly, replace the gear cover assembly.

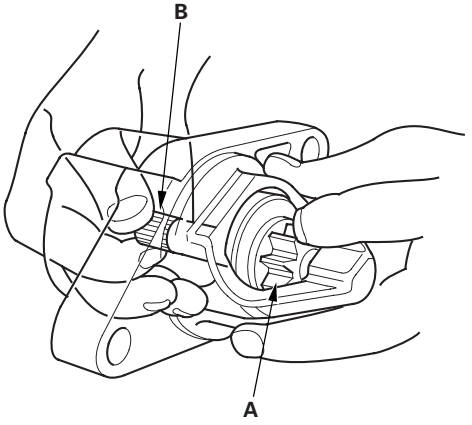

18. Holding the drive gear, turn the gear shaft counterclockwise. The gear shaft should rotate freely. If the gear shaft does not rotate smoothly, replace the gear cover assembly.

19. If the starter drive gear is worn or damaged, replace the overrunning clutch assembly; the gear is not available separately.
    Check the condition of the flywheel or torque converter ring gear. Replace it if the starter drive gear teeth are damaged.

(cont'd)

Starter Overhaul (cont'd)

Overrunning Clutch Inspection (K20A2, K20Z1 Engines)

20. Slide the overrunning clutch (A) along the shaft. Replace it if it does not slide smoothly.

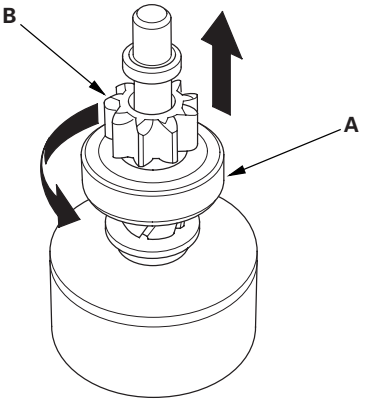

21. Hold the overrunning clutch, and turn the drive gear (B) in the direction shown to be sure it turns freely. Also make sure the drive gear locks in the opposite direction. If it does not lock in either direction or it locks in both directions, replace it.

22. If the starter drive gear is worn or damaged, replace the overrunning clutch assembly; the gear is not available separately.
Check the condition of the flywheel ring gear. Replace it if the starter drive gear teeth are damaged.

Starter Reassembly (K20A3 Engine)

23. Install the brush into the brush holder, and set the armature (A) in the brush holder (B).

NOTE: To seat the new brushes, slip a strip of #500 or #600 sandpaper, with the grit side up, between the commutator and each brush, and smoothly rotate the armature. The contact surface of the brushes will be sanded to the same contour as the commutator.

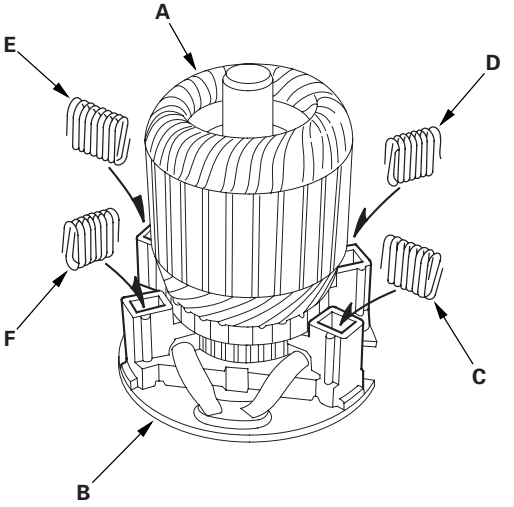

24. Squeezing a spring (C), insert it in the hole on the brush holder, and push it until it bottoms. Repeat this for the other three springs (D, E, and F).

25. Install the armature and brush holder assembly into the housing.

NOTE: Make sure the armature stays in the holder.

Starter Reassembly (K20A2, K20Z1 Engines)

26. Pry back each brush spring with a screwdriver, then position the brush about halfway out of its holder, and release the spring to hold it there.

    NOTE: To seat the new brushes, slip a strip of #500 or #600 sandpaper, with the grit side up, between the commutator and each brush, and smoothly rotate the armature. The contact surface of the brushes will be sanded to the same contour as the commutator.

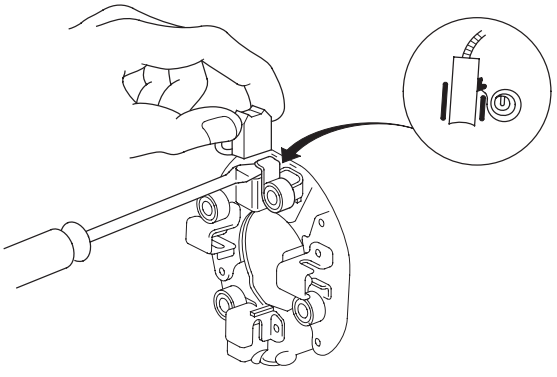

27. Install the armature in the housing, and install the brush holder. Next, pry back each brush spring again, and push the brush down until it seats against the commutator, then release the spring against the end of the brush.

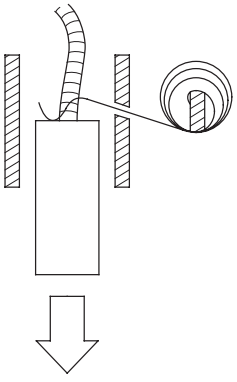

28. Install the starter end cover to retain the brush holder.

Component Location Index

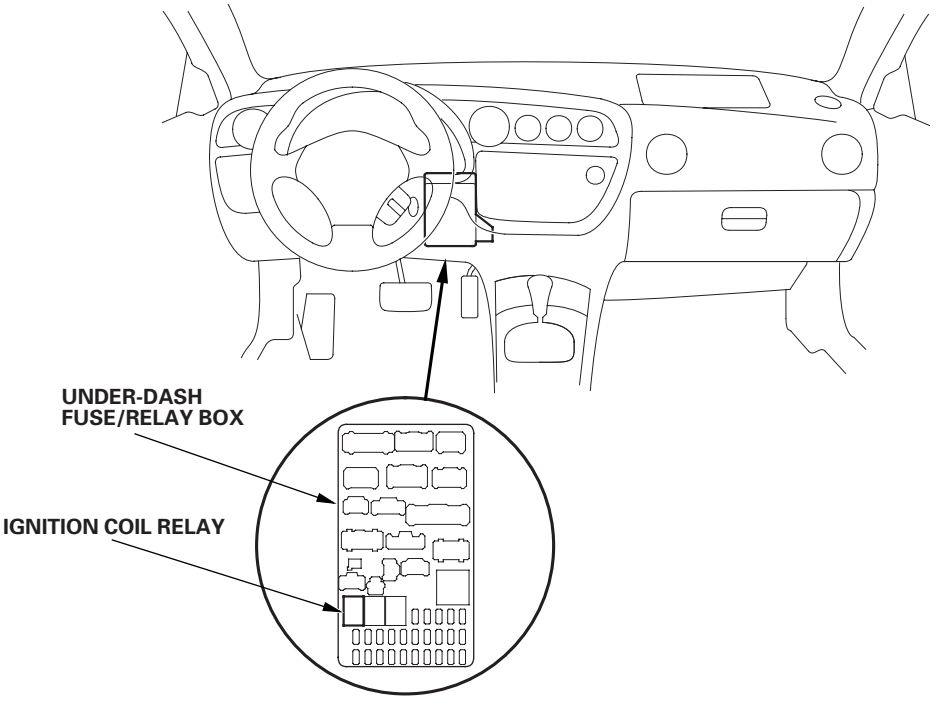

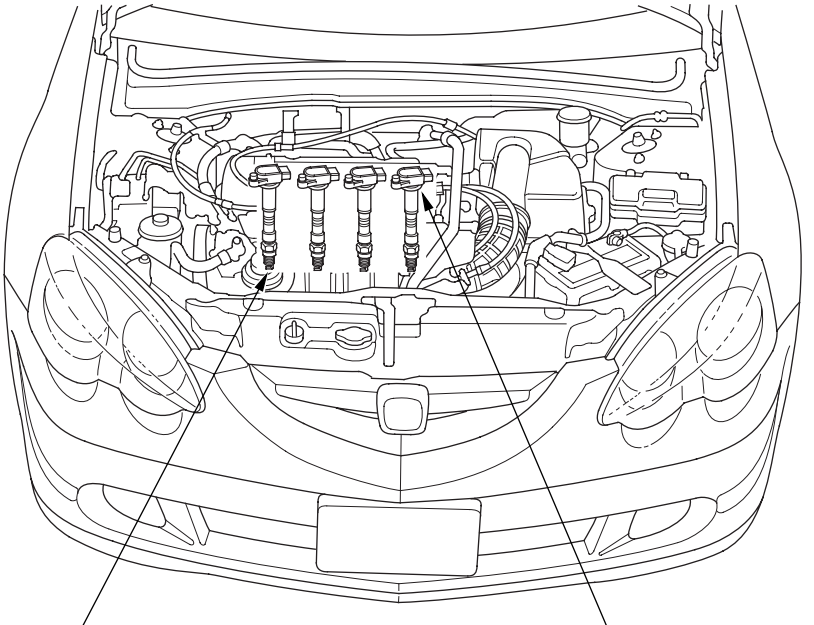

SPARK PLUG
Inspection, page 4-28

IGNITION COIL
Ignition Timing Inspection, page 4-25
Removal/Installation, page 4-26

Circuit Diagram

2002-2004 Models

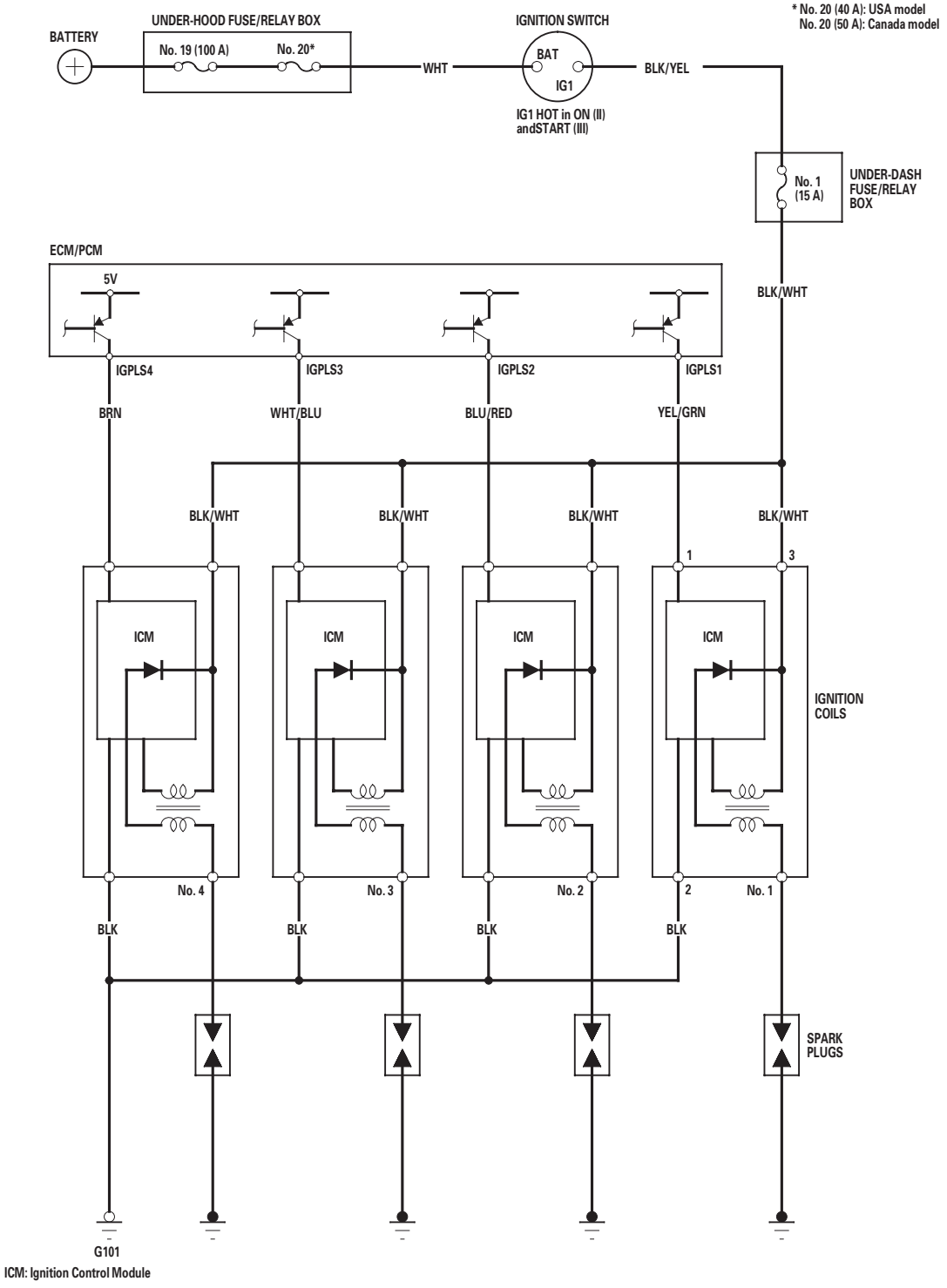

ICM: Ignition Control Module

Circuit Diagram (cont'd)

2005-2006 Models

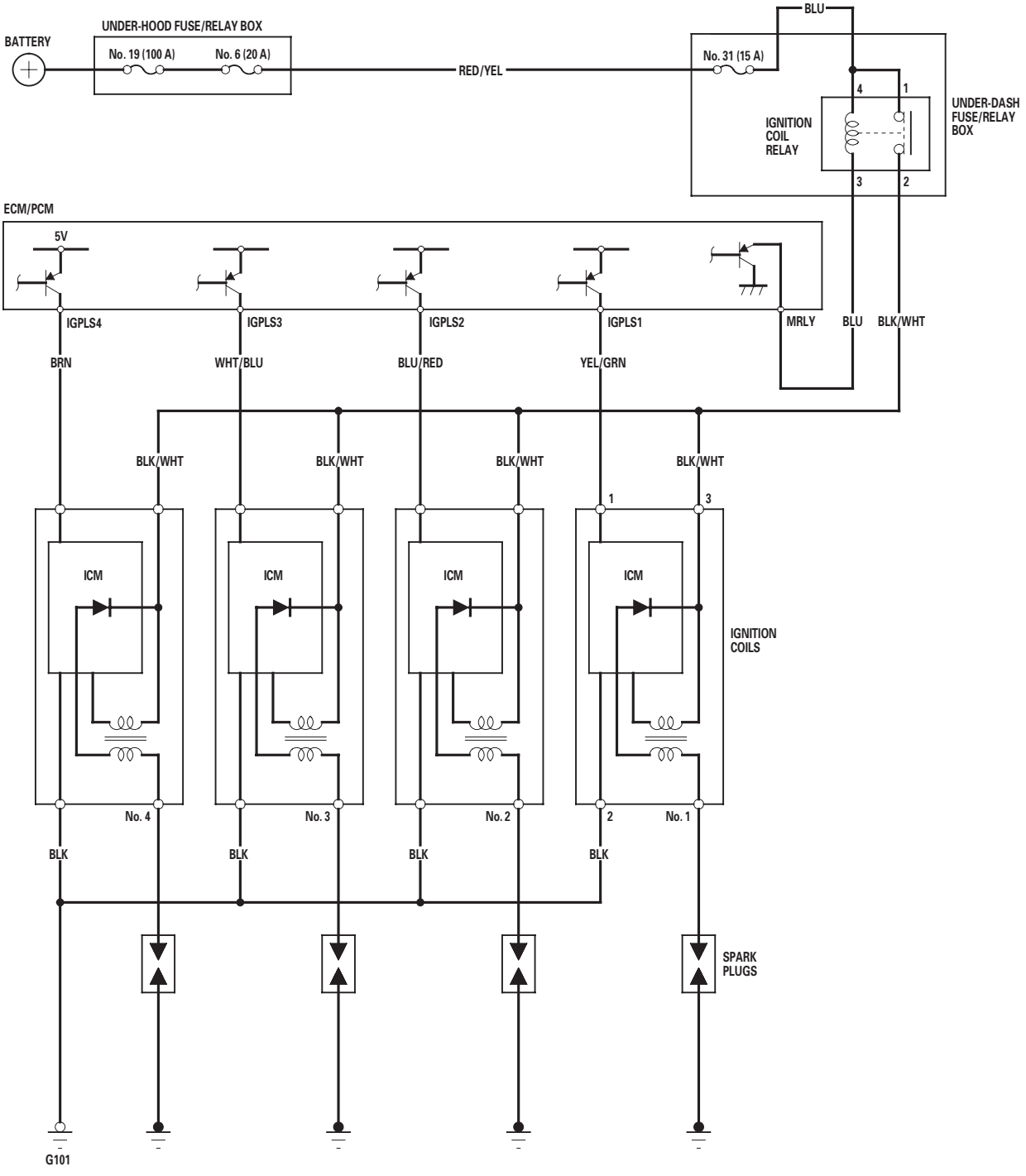

ICM: Ignition Control Module

Ignition Timing Inspection

1. Connect the Honda Diagnostic System (HDS) to the data link connector (DLC) (see step 2 on page 11-3), and check for DTCs. If a DTC is present, diagnose and repair the cause before inspecting the ignition timing.

2. Start the engine. Hold the engine speed at 3,000 rpm without load (in Park or Neutral) until the radiator fan comes on, then let it idle.

3. Check the idle speed (see page 11-348).

4. Select ''SCS'' mode using the HDS.

5. Connect the timing light to the service loop.

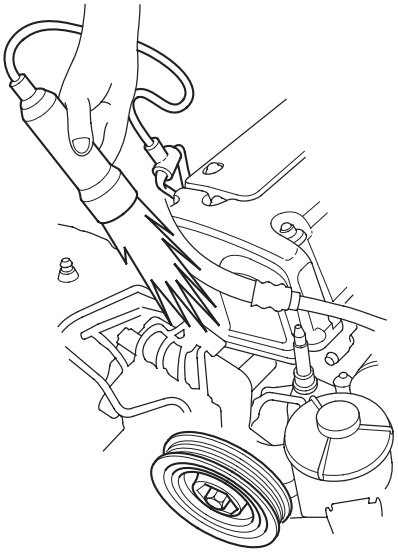

6. Aim the light toward the pointers (A) on the cam chain case. Check the ignition timing under a no load condition (headlights, blower fan, rear window defogger, and air conditioner are turned off).

   Ignition Timing
   M/T: 8°±2° BTDC (RED mark (B)) during idling in neutral
   A/T: 8°±2° BTDC (RED mark (B)) during idling in P or N

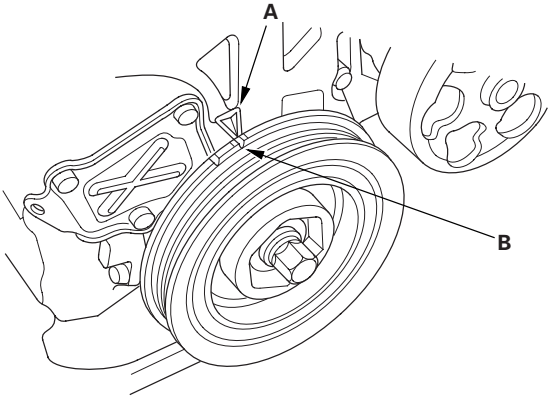

7. If the ignition timing differs from the specification, check the cam timing. If the cam timing is OK, update the engine control module (ECM)/ powertrain control module (PCM) if it does not have the latest software (see page 11-6), or substitute a known-good ECM/PCM (see page 11-7), then recheck. If the system works properly, and the ECM/PCM was substituted, replace the original ECM/PCM (see page 11-284).

8. Turn the ignition switch OFF.

9. Disconnect the HDS and the timing light.

Ignition Coil Removal/Installation

1. Remove the ignition coil cover (A), disconnect the ignition coil connectors (B), then remove the ignition coils (C).

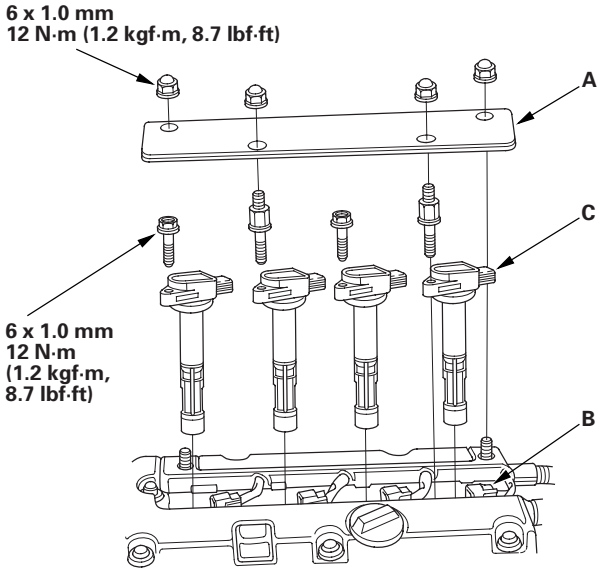

2. Install the ignition coils in the reverse order of removal.

Ignition Coil Relay Circuit Troubleshooting

2005-2006 Models

1. Check the No. 31 (15 A) fuse in the under-dash fuse/relay box.

   Is the fuse OK?

   YES—Go to step 2.

   NO—Replace the fuse. ■

2. Remove the ignition coil relay from the under-dash fuse/relay box, and test it (see page 22-62).

   Is the relay OK?

   YES—Go to step 3.

   NO—Replace the ignition coil relay. ■

3. Measure the voltage between ignition coil relay 4P socket terminal No. 1 and body ground, and between terminal No. 4 and body ground.

IGNITION COIL RELAY 4P SOCKET

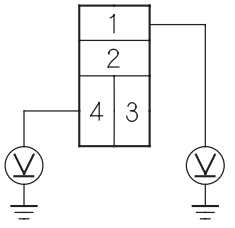

Terminal side of female terminals

Is there battery voltage?

YES—Go to step 4.

NO—Replace the under-dash fuse/relay box. ■

4. Check for continuity between ignition coil relay 4P socket terminal No. 2 and the No. 1, No. 2, No. 3 and No. 4 ignition coil 3P connector terminal No. 3.

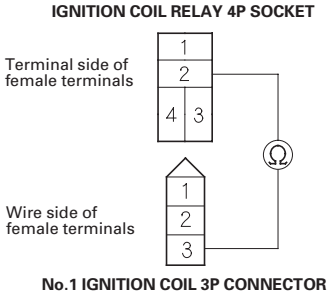

Is there continuity?

YES—Go to step 5.

NO—Repair an open in the wire between ignition coil relay 4P socket terminal No. 2 and ignition coil 3P connector terminal No. 3.■

5. Connect the Honda Diagnostic System (HDS) to the data link connector (DLC) (see step 2 on page 11-3). Turn the ignition switch ON (II), and jump the SCS line with the HDS, then turn the ignition switch OFF.

   NOTE: This step must be done to protect the engine control module (ECM)/ powertrain control module (PCM) from damage.

6. Disconnect ECM/PCM connector E (31P).

7. Check for continuity between ignition coil relay 4P socket terminal No. 3 and body ground.

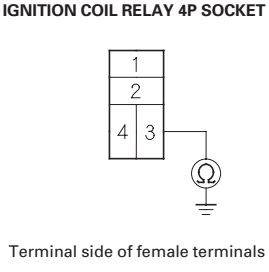

Is there continuity?

YES—Repair a short in the wire between ignition coil relay 4P socket terminal No. 3 and the ECM/PCM.■

NO—Go to step 8.

8. Check for continuity between ignition coil relay 4P socket terminal No. 3 and ECM/PCM connector terminal E7.

2002-2004 models

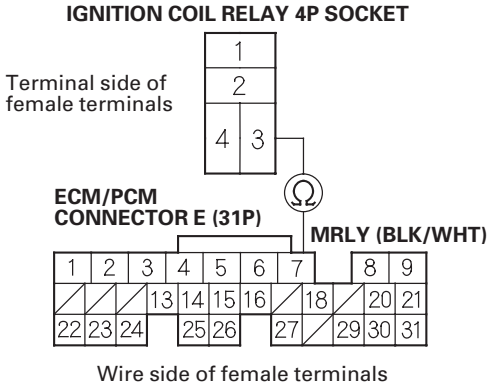

2005-2006 models

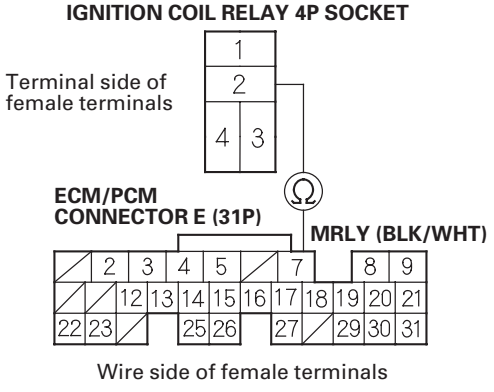

Is there continuity?

YES—The system is OK at this time. Check for loose or poor connections at the ignition coil relay and the ECM/PCM (E7).■

NO—Repair an open in the wire between ignition coil relay 4P socket terminal No. 3 and the ECM/PCM (E7).■

Spark Plug Inspection

1. Inspect the electrodes and ceramic insulator.

   - Burned or worn electrodes may be caused by:
     – Advanced ignition timing
     – Loose spark plug
     – Plug heat range too hot
     – Insufficient cooling

   - Fouled plug may be caused by:
     – Retarded ignition timing
     – Oil in combustion chamber
     – Incorrect spark plug gap
     – Plug heat range too cold
     – Excessive idling/low speed running
     – Clogged air cleaner element
     – Deteriorated ignition coils

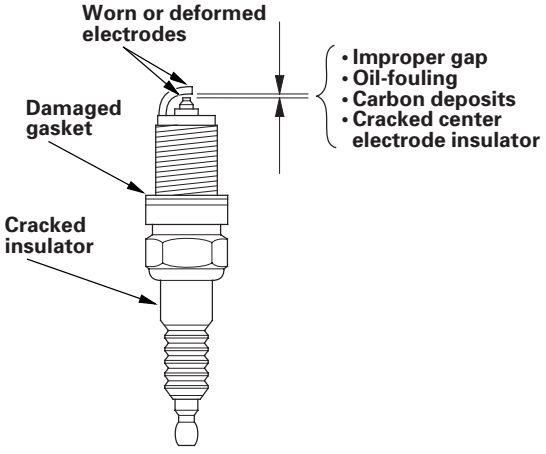

2. If the spark plug electrode is dirty or contaminated, clean the electrode with a plug cleaner.

   NOTE:
   - Do not use a wire brush or scrape the iridium electrode since this will damage the electrode.
   - Use a chemical cleaner such as Carb Spray to clean contamination on the electrode.
   - When using a sand blaster spark plug cleaner, do not clean for more than 20 seconds to avoid damaging the electrode.

3. Do not adjust the gap of iridium tip plugs (A); replace the spark plug if the gap is out of specification.

   Electrode Gap
   Standard (New): 1.0—1.1 mm (0.039—0.043 in.)
   Service Limit: 1.3 mm (0.051 in.)

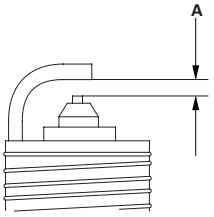

4. Replace the plug at the specified interval, or if the center electrode is rounded (A). Use only the spark plugs listed.

   Spark Plugs
   K20A3 Engine: IZFR6K11 (NGK)
   SKJ20DR-M11 (DENSO)
   K20A2 Engine: IFR7G11K (NGK)
   IFR7G11KS (NGK)
   SK22PR-M11 (DENSO)
   SK22PR-M11S (DENSO)
   K20Z1 Engine: IFR7G11KS (NGK)
   SK22PR-M11S (DENSO)

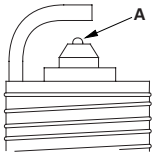

5. Apply a small amount of anti-seize compound to the plug threads, and screw the plugs into the cylinder head, finger-tight. Then torque them.

   Specified Torque
   IFR7G11KS (NGK), SK22PR-M11S (DENSO):
   25 N·m (2.5 kgf·m, 18 lbf·ft)
   Except IFR7G11KS (NGK), SK22PR-M11S (DENSO):
   18 N·m (1.8 kgf·m, 13 lbf·ft)

Component Location Index

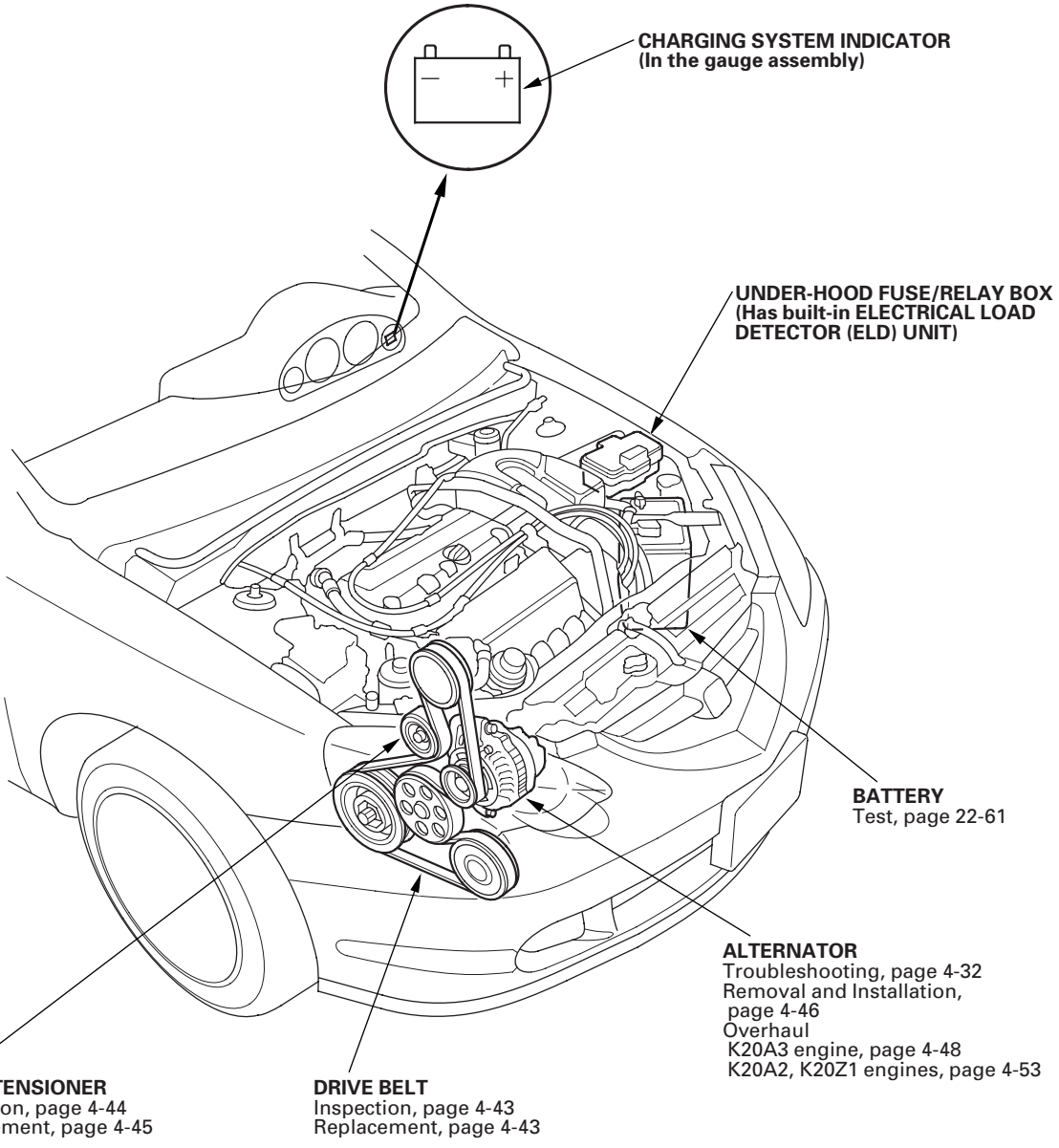

Symptom Troubleshooting Index

2002-2004 Models

Symptom	Diagnostic procedure	Also check for
Charging system indicator does not come on with the ignition switch ON (II)	Troubleshoot the charging system indicator circuit: • K20A3 engine (see page 4-32). • K20A2 engine (see page 4-35).	
Charging system indicator stays on	1. Troubleshoot the charging system indicator circuit: • K20A3 engine (see page 4-32). • K20A2 engine (see page 4-35). 2. Check for a broken drive belt (see page 4-43). 3. Check the drive belt auto-tensioner (see page 4-44).	
Battery discharged	1. Check for a poor connection, and for open or shorted wire(s) in charging system. 2. Check for parastic electrical current draw. 3. Check for a broken drive belt (see page 4-43). 4. Check the drive belt auto-tensioner (see page 4-44). 5. Troubleshoot the alternator and regulator circuit (see page 4-39). 6. Check for a poor connection at the battery terminal. 7. Test the battery (see page 22-61).	
Battery overcharged	1. Troubleshoot the alternator and regulator circuit (see page 4-39). 2. Test the battery (see page 22-61).	

2005-2006 Models

Symptom	Diagnostic procedure	Also check for
Charging system indicator does not come on with the ignition switch ON (II)	Troubleshoot the charging system indicator circuit: • K20A3 engine (see page 4-33). • K20Z1 engine (see page 4-37).	
Charging system indicator stays on	1. Check for PGM-FI DTCs (see page 11-3). 2. Troubleshoot the charging system indicator circuit: • K20A3 engine (see page 4-33). • K20Z1 engine (see page 4-37). 3. Check for a broken drive belt (see page 4-43). 4. Check the drive belt auto-tensioner (see page 4-44).	
Battery discharged	1. Check for parastic electrical current draw. 2. Check for a broken drive belt (see page 4-43). 3. Check the drive belt auto-tensioner (see page 4-44). 4. Troubleshoot the alternator and regulator circuit (see page 4-39). 5. Check for a poor connection at the battery terminal. 6. Test the battery (see page 22-61).	
Battery overcharged	1. Troubleshoot the alternator and regulator circuit (see page 4-39). 2. Test the battery (see page 22-61).	

Circuit Diagram

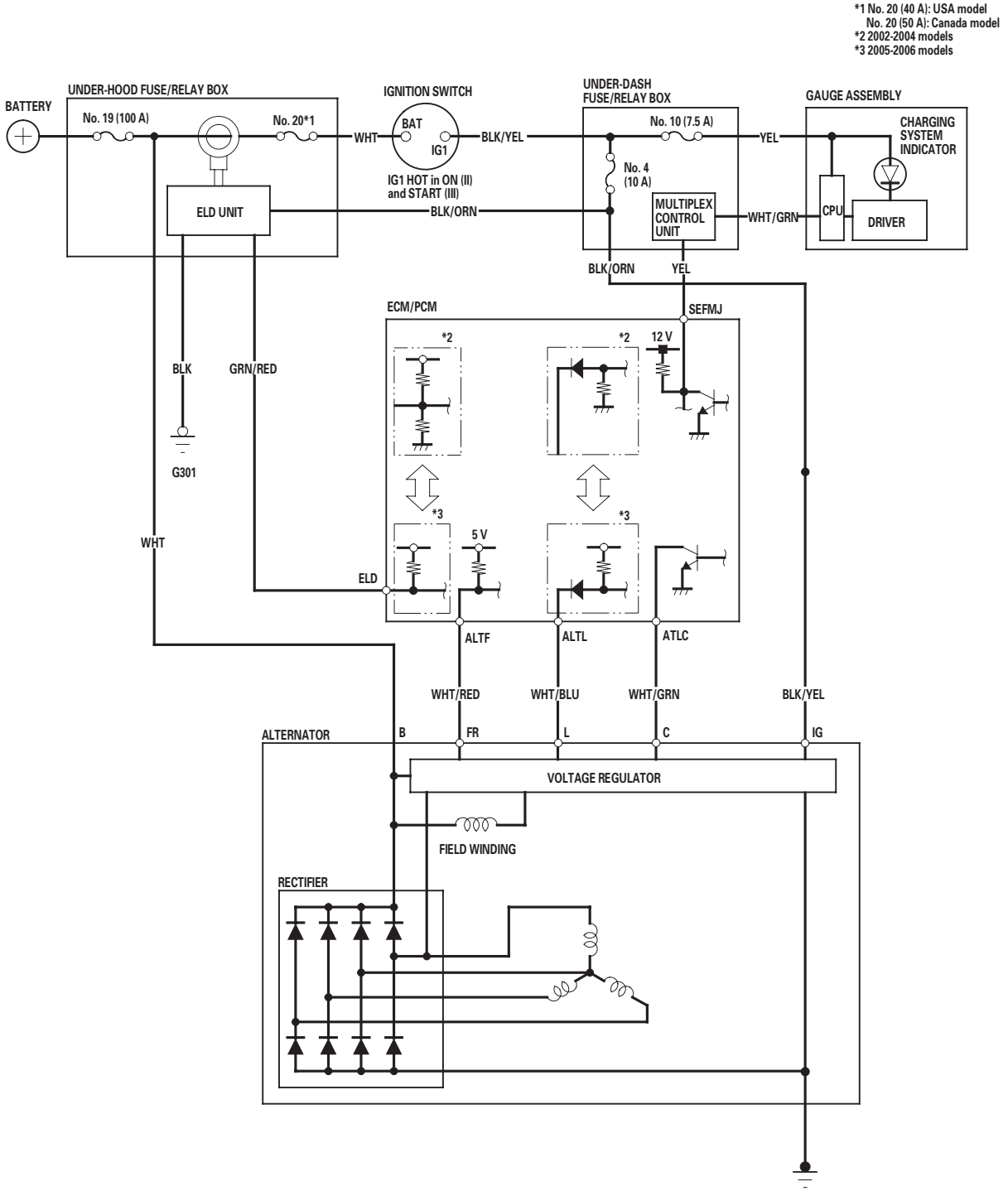

Charging System Indicator Circuit Troubleshooting

K20A3 Engine (2002-2004 Models)

1. Turn the ignition switch ON (II).

   Does the charging system indicator come on?

   YES—Go to step 2.

   NO—Go to step 3.

2. Start the engine.

   Does the charging system indicator go off?

   YES—Charging system indicator circuit is OK. Go to the Alternator and Regulator Circuit Troubleshooting (see page 4-39). ■

   NO—Go to step 3.

3. Do the gauge assembly self-diagnostic function procedure (see page 22-68).

   Does the charging system indicator flash?

   YES—Go to step 4.

   NO—Replace the gauge assembly (see page 22-74). ■

4. Turn the ignition switch OFF.

5. Disconnect the engine wire harness 8P connector from the starter subharness 8P connector.

6. Turn the ignition switch ON (II).

7. Measure the voltage between engine wire harness 8P connector terminal No. 4 and body ground.

ENGINE WIRE HARNESS 8P CONNECTOR

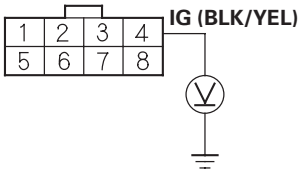

Wire side of female terminals

   Is there battery voltage?

   YES—Go to step 8.

   NO—Check for a blown No. 4 (10 A) fuse in the under-dash fuse/relay box. If the fuse is OK, repair open in the wire between the alternator and under-dash fuse/relay box. ■

8. Turn the ignition switch OFF.

   NOTE: This step must be done to protect the engine control module (ECM)/powertrain control module (PCM) from damage.

9. Disconnect ECM/PCM connector B (24P).

10. Check for continuity between ECM/PCM connector terminal B10 and engine wire harness 8P connector terminal No. 8.

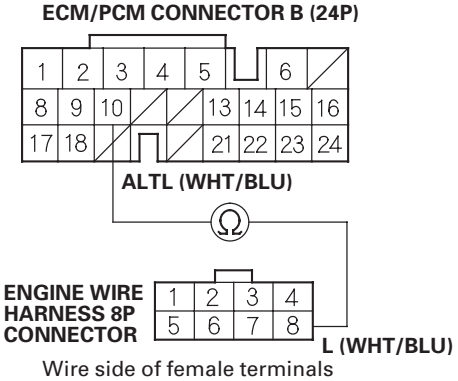

Is there continuity?

YES—Go to step 11.

NO—Repair an open in the wire between the alternator and the ECM/PCM. ■

11. Check for continuity between ECM/PCM connector terminal B10 and body ground.

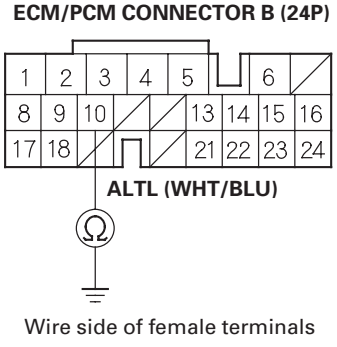

Is there continuity?

YES—Repair a short in the wire between the alternator and the ECM/PCM. ■

NO—Go to the Alternator and Regulator Circuit Troubleshooting (see page 4-39). ■

K20A3 Engine (2005-2006 Models)

1. Turn the ignition switch ON (II).

   Does the charging system indicator come on?

   YES—Go to step 2.

   NO—Go to step 11.

2. Shift to Park or Neutral, and start the engine. Hold the engine speed at 2,000 rpm for 1 minute.

   Does the charging system indicator go off?

   YES—Charging system indicator circuit is OK. Go to the Alternator and Regulator Circuit Troubleshooting (see page 4-39).

   NO—Go to step 3.

3. Do the gauge assembly self-diagnostic function procedure (see page 22-68).

   Does the charging system indicator flash?

   YES—Go to step 4.

   NO—Replace the gauge assembly (see page 22-74). ■

4. Turn the ignition switch OFF.

5. Disconnect the engine wire harness 8P connector from the starter subharness 8P connector.

6. Turn the ignition switch ON (II).

   Does the charging system indicator go off?

   YES—Replace the alternator (see page 4-46) or repair the alternator (see page 4-48). ■

   NO—Go to step 7.

(cont'd)

Charging System Indicator Circuit Troubleshooting (cont'd)

7. Turn the ignition switch OFF.

8. Connect the Honda Diagnostic System (HDS) to the data link connector (DLC) (see step 2 on page 11-3). Turn the ignition switch ON (II), and jump the SCS line with the HDS, then turn the ignition switch OFF.

   NOTE: This step must be done to protect the engine control module (ECM)/powertrain control module (PCM) from damage.

9. Disconnect ECM/PCM connector B (24P).

10. Check for continuity between ECM/PCM connector terminal B10 and body ground.

ECM/PCM CONNECTOR B (24P)

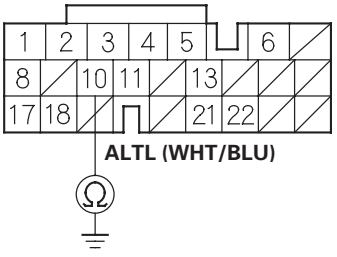

Wire side of female terminals

Is there continuity?

YES—Repair a short in the wire between the alternator and the ECM/PCM. ■

NO—Update the ECM/PCM if it does not have the latest software (see page 11-6), or substitute a known-good ECM/PCM (see page 11-7), then recheck. If the symptom/indication goes away with a known-good ECM/PCM, replace the original ECM/PCM (see page 11-284). ■

11. Do the gauge assembly self-diagnostic function procedure (see page 22-68).

    Does the charging system indicator flash?

    YES—Go to step 12.

    NO—Replace the gauge assembly (see page 22-74). ■

12. Turn the ignition switch OFF.

13. Disconnect the engine wire harness 8P connector from the starter subharness 8P connector.

14. Connect engine wire harness 8P connector terminal No. 8 and body ground with a jumper wire.

ENGINE WIRE HARNESS 8P CONNECTOR

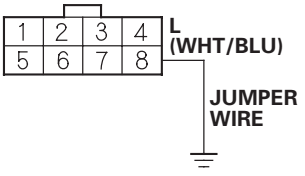

Wire side of female terminals

15. Turn the ignition switch ON (II).

    Does the charging system indicator come on?

    YES—Replace the alternator (see page 4-46) or repair the alternator (see page 4-48). ■

    NO—Go to step 16.

16. Connect the HDS to the DLC (see step 2 on page 11-3). Turn the ignition switch ON (II), and jump the SCS line with the HDS, then turn the ignition switch OFF.

    NOTE: This step must be done to protect the ECM/PCM from damage.

17. Disconnect ECM/PCM connector B (24P).

18. Check for continuity between ECM/PCM connector terminal B10 and body ground.

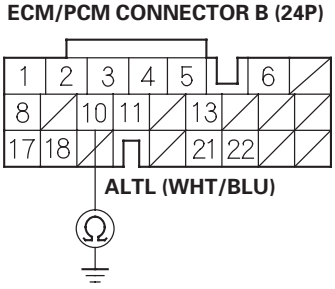

Wire side of female terminals

Is there continuity?

YES—Update the ECM/PCM if it does not have the latest software (see page 11-6), or substitute a known-good ECM/PCM (see page 11-7), then recheck. If the symptom/indication goes away with a known-good ECM/PCM, replace the original ECM/PCM (see page 11-284). ■

NO—Repair an open in the wire between the alternator and the ECM/PCM. ■

K20A2 Engine (2002-2004 Models)

1. Turn the ignition switch ON (II).

   Does the charging system indicator come on?

   YES—Go to step 2.

   NO—Go to step 3.

2. Start the engine.

   Does the charging system indicator go off?

   YES—Charging system indicator circuit is OK. Go to the Alternator and Regulator Circuit Troubleshooting (see page 4-39). ■

   NO—Go to step 3.

3. Do the gauge assembly self-diagnostic function procedure (see page 22-48).

   Does the charging system indicator flash?

   YES—Go to step 4.

   NO—Replace the gauge assembly (see page 22-74). ■

4. Turn the ignition switch OFF.

5. Disconnect the engine wire harness 6P connector from the starter subharness 6P connector.

6. Turn the ignition switch ON (II).

(cont'd)

Charging System Indicator Circuit Troubleshooting (cont'd)

7. Measure the voltage between engine wire harness 6P connector terminal No. 3 and body ground.

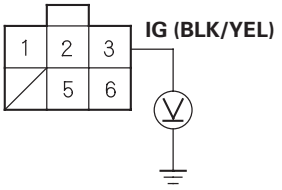

Wire side of female terminals

Is there battery voltage?

YES—Go to step 8.

NO—Check for a blown No. 4 (10 A) fuse in the under-dash fuse/relay box. If the fuse is OK, repair open in the wire between the alternator and under-dash fuse/relay box. ■

8. Turn the ignition switch OFF.

NOTE: This step must be done to protect the engine control module (ECM) from damage.

9. Disconnect ECM connector B (24P).

10. Check for continuity between ECM connector terminal B10 and engine wire harness 6P connector terminal No. 6.

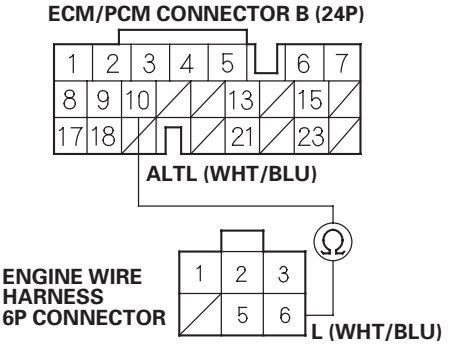

Wire side of female terminals

Is there continuity?

YES—Go to step 11.

NO—Repair an open in the wire between the alternator and the ECM. ■

11. Check for continuity between ECM connector terminal B10 and body ground.

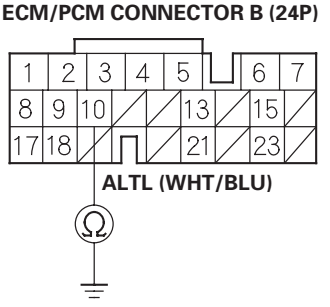

Wire side of female terminals

Is there continuity?

YES—Repair a short in the wire between the alternator and the ECM. ■

NO—Go to the Alternator and Regulator Circuit Troubleshooting (see page 4-39). ■

K20Z1 Engine (2005-2006 Models)

1. Turn the ignition switch ON (II).

   Does the charging system indicator come on?

   YES—Go to step 2.

   NO—Go to step 11.

2. Shift to Neutral, and start the engine. Hold the engine speed at 2,000 rpm for 1 minute.

   Does the charging system indicator go off?

   YES—Charging system indicator circuit is OK. Go to the Alternator and Regulator Circuit Troubleshooting (see page 4-39). ■

   NO—Go to step 3.

3. Do the gauge assembly self-diagnostic function procedure (see page 22-68).

   Does the charging system indicator flash?

   YES—Go to step 4.

   NO—Replace the gauge assembly (see page 22-74). ■

4. Turn the ignition switch OFF.

5. Disconnect the engine wire harness 6P connector from the starter subharness 6P connector.

6. Turn the ignition switch ON (II).

   Does the charging system indicator go off?

   YES—Replace the alternator (see page 4-46) or repair the alternator (see page 4-53).

   NO—Go to step 7.

7. Turn the ignition switch OFF.

8. Connect the Honda Diagnostic System (HDS) to the data link connector (DLC) (see step 2 on page 11-3). Turn the ignition switch ON (II), and jump the SCS line with the HDS, then turn the ignition switch OFF.

   NOTE: This step must be done to protect the engine control module (ECM) from damage.

9. Disconnect ECM connector B (24P).

10. Check for continuity between ECM connector terminal B10 and body ground.

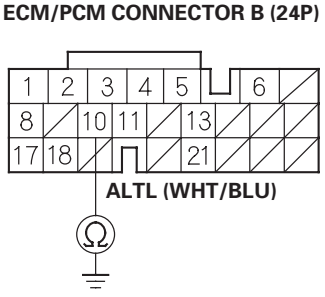

Wire side of female terminals

Is there continuity?

YES—Repair a short in the wire between the alternator and the ECM. ■

NO—Update the ECM if it does not have the latest software (see page 11-6), or substitute a known-good ECM (see page 11-7), then recheck. If the symptom/indication goes away with a known-good ECM, replace the original ECM (see page 11-284). ■

(cont'd)

Charging System Indicator Circuit Troubleshooting (cont'd)

11. Do the gauge assembly self-diagnostic function procedure (see page 22-68).

    Does the charging system indicator flash?

    YES—Go to step 12.

    NO—Replace the gauge assembly (see page 22-74). ■

12. Turn the ignition switch OFF.

13. Disconnect the engine wire harness 6P connector from the starter subharness 6P connector.

14. Connect engine wire harness 6P connector terminal No. 6 and body ground with a jumper wire.

ENGINE WIRE HARNESS 6P CONNECTOR

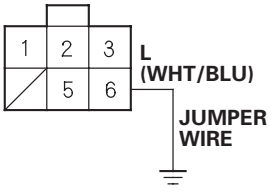

Wire side of female terminals

15. Turn the ignition switch ON (II).

    Does the charging system indicator come on?

    YES—Replace the alternator (see page 4-46) or repair the alternator (see page 4-53). ■

    NO—Go to step 16.

16. Connect the HDS to the DLC. Turn the ignition switch ON (II), and jump the SCS line with the HDS, then turn the ignition switch OFF.

    NOTE: This step must be done to protect the ECM from damage.

17. Disconnect ECM connector B (24P).

18. Check for continuity between ECM connector terminal B10 and body ground.

ECM/PCM CONNECTOR B (24P)

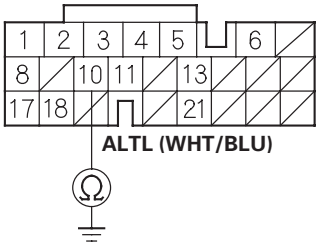

Wire side of female terminals

Is there continuity?

YES—Update the ECM if it does not have the latest software (see page 11-6), or substitute a known-good ECM (see page 11-7), then recheck. If the symptom/indication goes away with a known-good ECM, replace the original ECM (see page 11-284). ■

NO—Repair an open in the wire between the alternator and the ECM. ■

Alternator and Regulator Circuit Troubleshooting

1. Make sure the battery is sufficiently charged (see page 22-61).

2. Raise the hoist to full height.

3. Hook up the ammeter, 0—400 A, to the starter subharness.

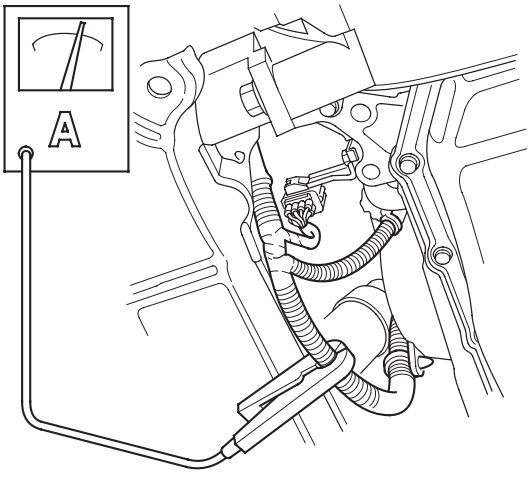

4. Lower the hoist.

5. Hook up the voltmeter, 0—20 V (accurate within 0.1 V), to T101.

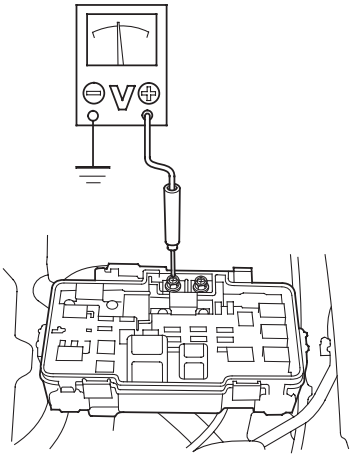

6. Start the engine. Hold the engine speed at 3,000 rpm without load (in Park or Neutral) until the radiator fan comes on, then let it idle.

7. Raise the engine speed to 2,000 rpm, and hold it there.

8. Turn on the headlights to high beam, and measure voltage at the under-hood fuse/relay box terminal.

   Is the voltage between 13.9 and 15.1 V?

   YES—Go to step 9.

   NO—Repair the alternator components:

   - K20A3 engine (see page 4-46). ■
   - K20A2, K20Z1 engines (see page 4-53). ■

9. Read the amperage at 13.5 V.

   NOTE: Adjust the voltage by turning on the blower motor, rear window defogger, brake lights, etc.

   Is the amperage 60 A or more?

   YES—Alternator/regulator operation is OK. Go to Alternator Control Circuit Troubleshooting (see page 4-40). ■

   NO—Repair the alternator components:

   - K20A3 engine (see page 4-46). ■
   - K20A2, K20Z1 engines (see page 4-53). ■

Alternator Control Circuit Troubleshooting

K20A3 Engine

1. Check for proper operation of the electrical load detector (ELD) by checking the malfunction indicator lamp (MIL) (see page 11-3).

2. Connect the Honda Diagnostic System (HDS) to the data link connector (DLC), and check for DTCs (see step 2 on page 11-3). If a DTC is present, diagnose and repair the cause before continuing with this test.

3. Disconnect the engine wire harness 8P connector from the starter subharness 8P connector.

4. Start the engine, and turn on the headlights to high beam.

5. Measure the voltage between engine wire harness 8P connector terminal No. 3 and the positive terminal of the battery.

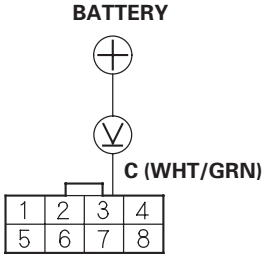

ENGINE WIRE HARNESS 8P CONNECTOR

Wire side of female terminals

Is there 1 V or less?

YES—Go to step 6.

NO—Go to step 9.

6. Jump the SCS line with the HDS, then turn off the headlights and ignition switch.

   NOTE: This step must be done to protect the engine control module (ECM)/powertrain control module (PCM) from damage.

7. Disconnect ECM/PCM connector B (24P).

8. Check for continuity between ECM/PCM connector terminal B18 and body ground.

2002-2004 Models

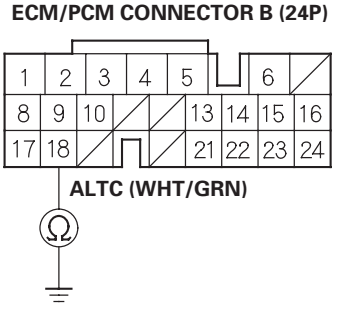

Wire side of female terminals

2005-2006 Models

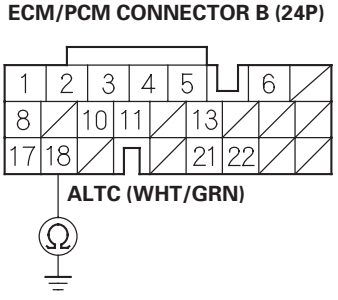

Wire side of female terminals

Is there continuity?

YES—Repair a short in the wire between the alternator and the ECM/PCM.■

NO—Update the ECM/PCM if it does not have the latest software (see page 11-6), or substitute a known-good ECM/PCM (see page 11-7), then recheck. If the symptom/indication goes away with a known-good ECM/PCM, replace the original ECM/PCM (see page 11-284).■

9. Jump the SCS line with the HDS, then turn off the headlights and ignition switch.

   NOTE: This step must be done to protect the ECM/PCM for damage.

10. Disconnect ECM/PCM connector B (24P).

11. Check for continuity between ECM/PCM connector terminal B18 and the engine wire harness 8P connector terminal No. 3.

2002-2004 Models

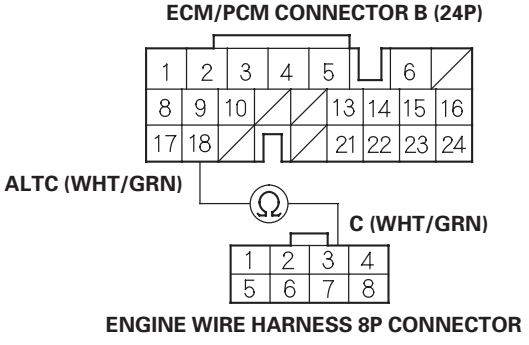

2005-2006 Models

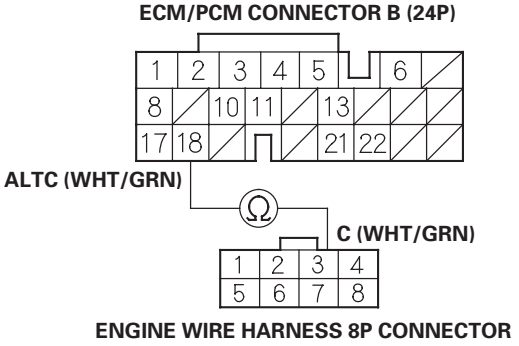

Is there continuity?

YES—Replace the alternator (see page 4-46) or repair the alternator (see page 4-48). ■

NO—Repair an open in the wire between the alternator and the ECM/PCM. ■

K20A2, K20Z1 Engines

1. Check for proper operation of the electrical load detector (ELD) by checking the malfunction indicator lamp (MIL) (see page 11-3).

2. Connect the Honda Diagnostic System (HDS) to the data link connector (DLC), and check for DTCs (see step 2 on page 11-3). If a DTC is present, diagnose and repair the cause before continuing with this test.

3. Disconnect the engine wire harness 6P connector from the starter subharness 6P connector.

4. Start the engine, and turn on the headlights to high beam.

5. Measure the voltage between engine wire harness 6P connector terminal No. 2 and the positive terminal of the battery.

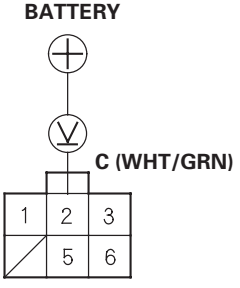

Is there 1 V or less?

YES—Go to step 6.

NO—Go to step 9.

6. Jump the SCS line with the HDS, then turn off the headlights and ignition switch.

   NOTE: This step must be done to protect the engine control module (ECM) from damage.

7. Disconnect ECM connector B (24P).

(cont'd)

Alternator Control Circuit Troubleshooting (cont'd)

8. Check for continuity between ECM connector terminal B18 and body ground.

2002-2004 Models

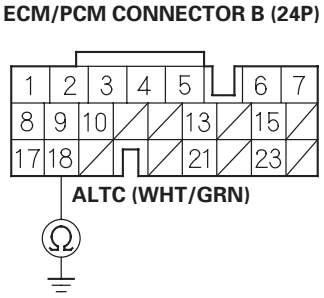

Wire side of female terminals

2005-2006 Models

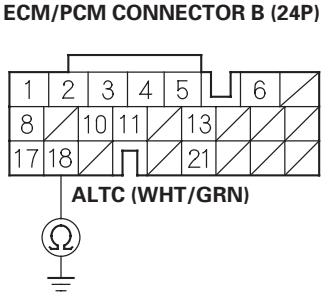

Wire side of female terminals

Is there continuity?

YES—Repair a short in the wire between the alternator and the ECM. ■

NO—Update the ECM if it does not have the latest software (see page 11-6), or substitute a known-good ECM (see page 11-7), then recheck. If the symptom/indication goes away with a known-good ECM, replace the original ECM (see page 11-284). ■

9. Jump the SCS line with the HDS, then turn off the headlights and ignition switch.

   NOTE: This step must be done to protect the ECM for damage.

10. Disconnect ECM connector B (24P).

11. Check for continuity between ECM connector terminal B18 and the engine wire harness 6P connector terminal No. 2.

2002-2004 Models

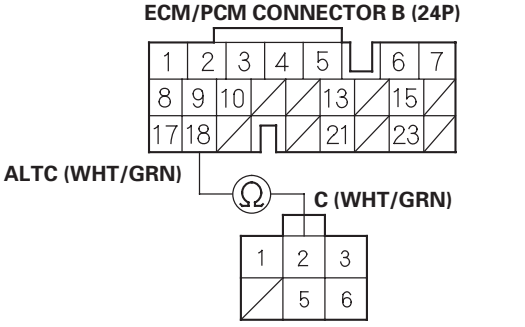

Wire side of female terminals

2005-2006 Models

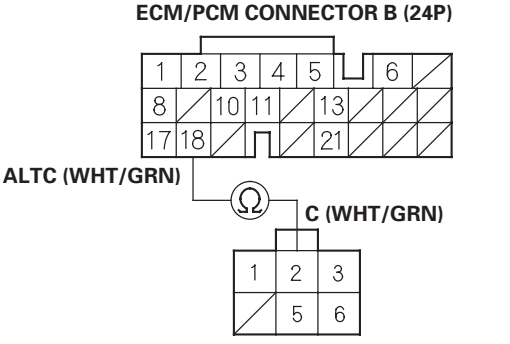

Wire side of female terminals

Is there continuity?

YES—Replace the alternator (see page 4-46) or repair the alternator (see page 4-53). ■

NO—Repair an open in the wire between the alternator and the ECM. ■

Drive Belt Inspection

1. Inspect the belt for cracks and damage. If the belt is cracked or damaged, replace it.

2. Check that the auto-tensioner indicator (A) is within the standard range (B) as shown. If it is out of the standard range, replace the drive belt (see page 4-40).

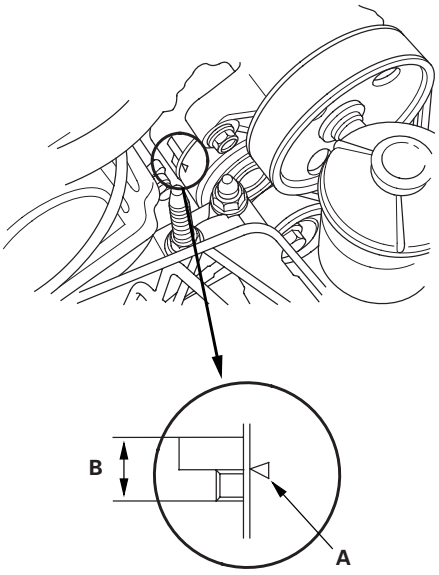

Drive Belt Replacement

Special Tools Required
Belt tension release tool Snap-on YA9317 or equivalent, commercially available

1. Unclip the power steering reservoir.

2. Move the auto-tensioner (A) with the belt tension release tool to relieve tension from the drive belt (B), and remove the drive belt.

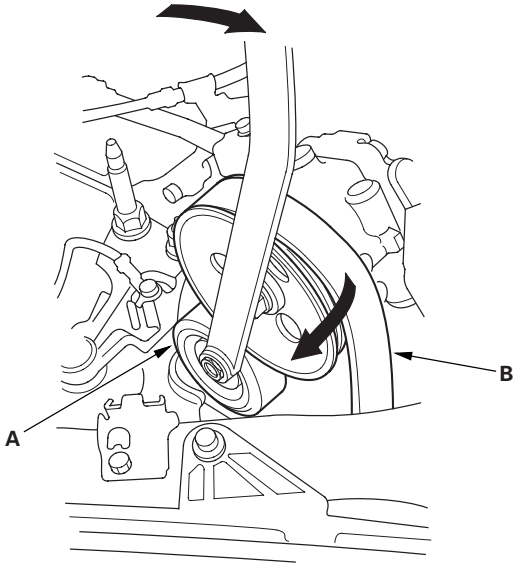

3. Install the new belt in the reverse order of removal.

Drive Belt Auto-tensioner Inspection

Special Tools Required
Belt tension release tool Snap-on YA9317 or equivalent, commercially available

1. Check whether there is a change in the position of the auto-tensioner indicator before starting the engine and after starting the engine. If there is a change in the position, replace the auto-tensioner.

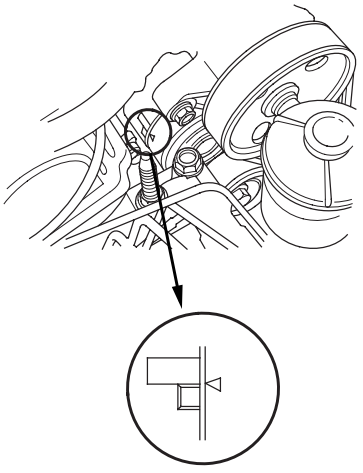

2. Check for abnormal noise from the tensioner pulley. If you hear abnormal noise, replace the tensioner pulley.

3. Remove the drive belt (see page 4-43).

4. Move the auto-tensioner within its limit with the belt tension release tool in the direction shown. Check that the tensioner moves smoothly and without any abnormal noise. If the tensioner does not move smoothly or you hear abnormal noise, replace the auto-tensioner.

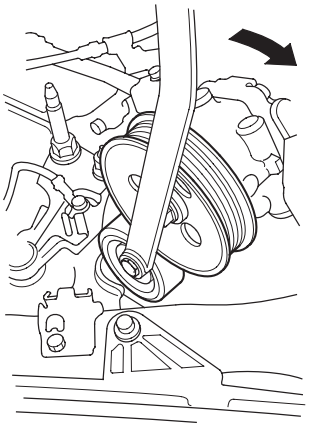

5. Remove the auto-tensioner (see page 4-45).

6. Install the tensioner pulley.

7. Clamp the auto-tensioner (A) by using two 8 mm bolts (B) and a vise (C) as shown. Do not clamp the auto-tensioner itself.

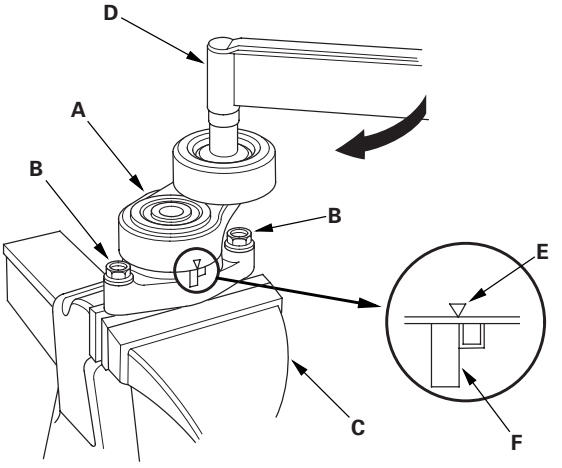

8. Set the torque wrench (D) on the pulley bolt.

9. Align the indicator (E) on the tensioner arm with center mark (F) on the tensioner base by using the torque wrench, and measure the torque. If the torque value is out of specification, replace the auto-tensioner.

   NOTE: If the indicator exceeds the center mark, recheck the torque.

   Auto-tensioner Spring Torque:
   26.5—36.3 N·m (2.7—3.7 kg·m, 19.5—26.8 lbf·ft)

Drive Belt Auto-tensioner Replacement

1. Remove the drive belt (see page 4-43).

2. Remove the power steering (P/S) pump without disconnecting the P/S hoses.

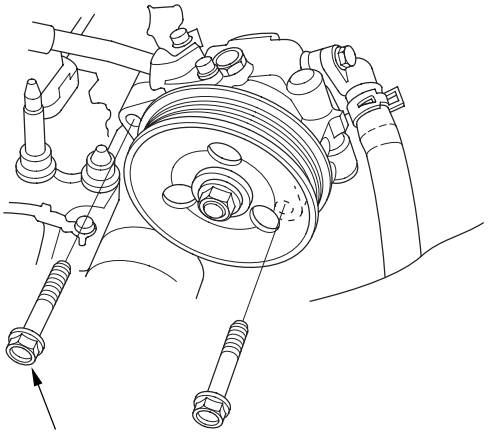

8 x 1.25 mm
22 N·m (2.2 kgf·m, 16 lbf·ft)

3. Remove the auto-tensioner pulley.

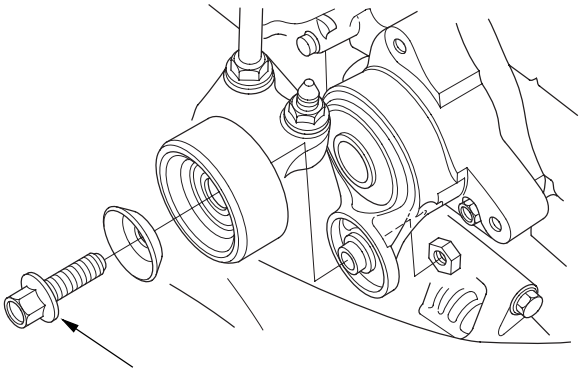

55 N·m (5.6 kgf·m, 41 lbf·ft)

4. Remove the auto-tensioner.

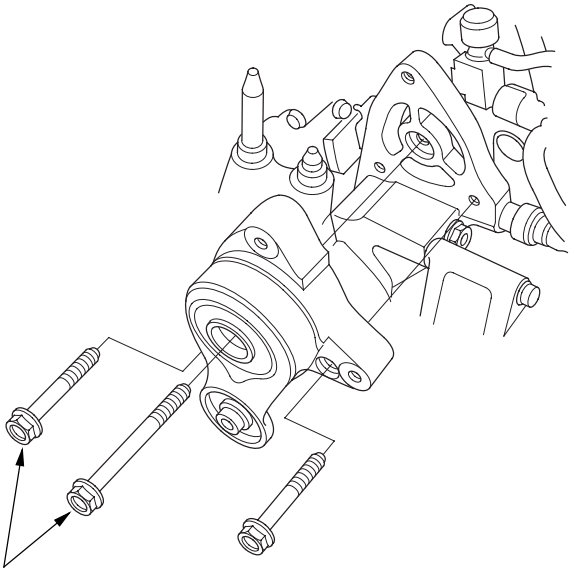

8 x 1.25 mm
22 N·m (2.2 kgf·m, 16 lbf·ft)

5. Install in the reverse order of removal.

Alternator Removal and Installation

Removal

1. Make sure you have the anti-theft codes for the radio, then write down the customer's radio station presets.
2. Disconnect the negative cable from the battery first, then disconnect the positive cable.
3. Remove the drive belt (see page 4-43).
4. Remove the auto-tensioner (see page 4-45).
5. Disconnect the alternator connector (A) and BLK wire (B) from the alternator.

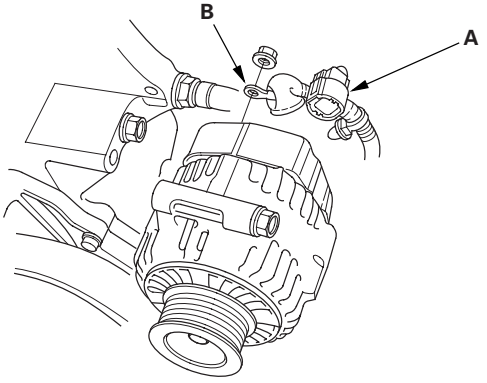

6. Remove the three bolts securing the alternator.

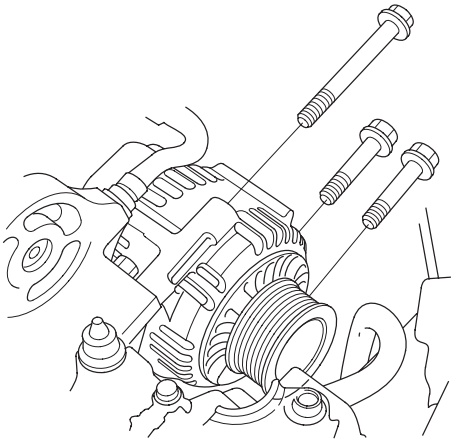

7. Remove the alternator.

Installation

1. Install the three bolts securing the alternator.

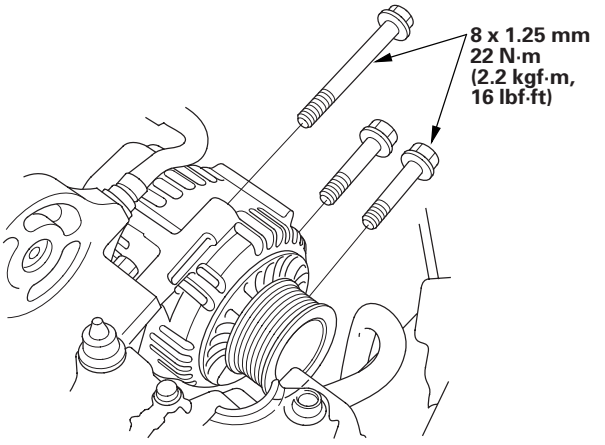

2. Connect the alternator connector (A) and BLK wire (B) from the alternator.

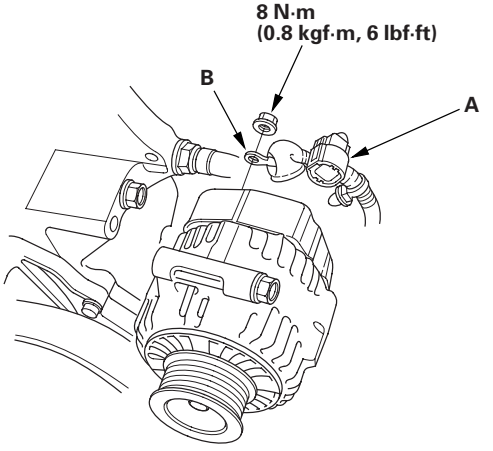

3. Install the auto-tensioner (see page 4-45).
4. Install the drive belt (see page 4-43).

5. Connect the positive cable to the battery first, then the connect negative cable.

6. Enter the anti-theft codes for the radio, then enter the customer's radio station presets.

7. Set the clock.

8. Do the engine control module (ECM)/powertrain control module (PCM) idle learn procedure.

   - 2002-2004 models (see page 11-349)
   - 2005-2006 models (see page 11-349)

9. Do the power window control unit reset procedure (see page 22-148).

Alternator Overhaul

Exploded View - K20A3 Engine

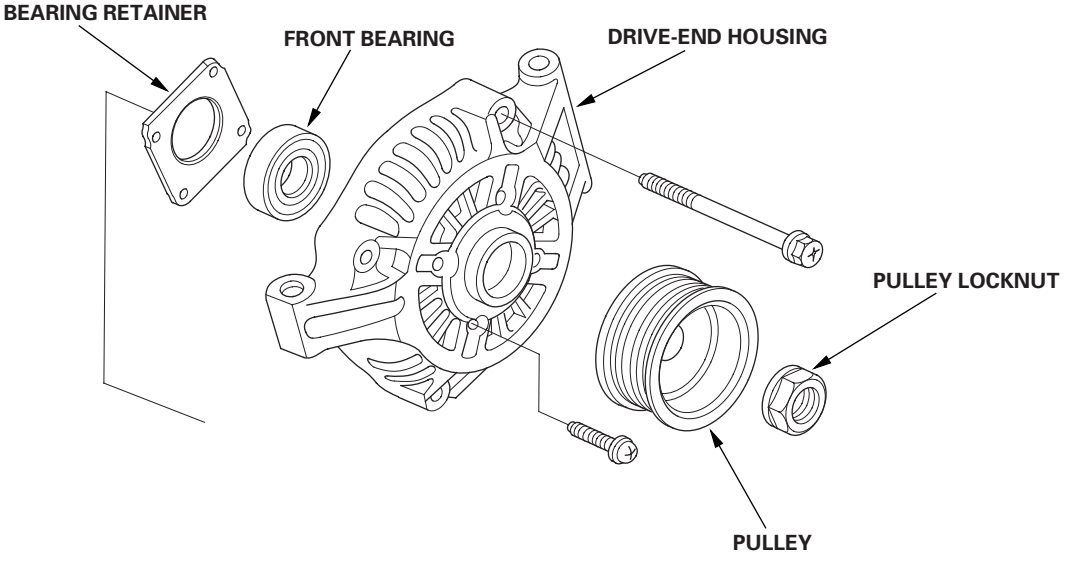

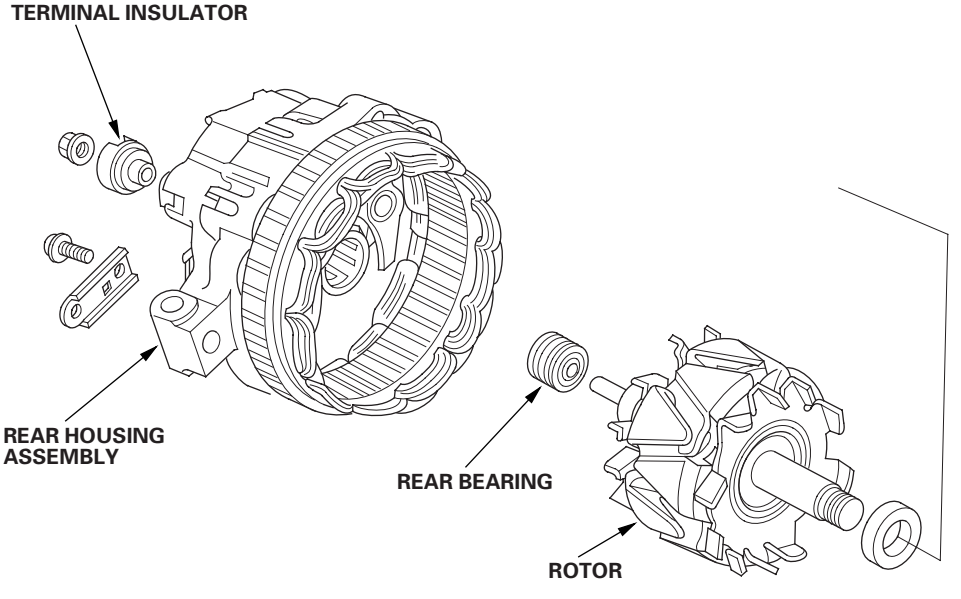

Special Tools Required
• Driver 07749-0010000
• Attachment, 42 x 47 mm 07746-0010300

NOTE: Refer to the Exploded View as needed during this procedure.

Alternator Disassembly

1. Test the alternator and regulator before you remove them (see page 4-39).

2. Remove the alternator (see page 4-46).

3. Remove the four through bolts.

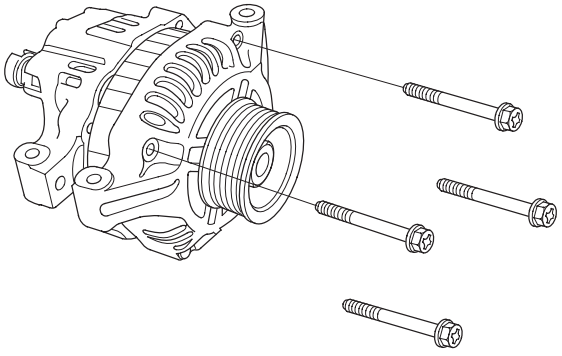

4. Heat the rear bearing seat with a 1,000 W hair drier for about 5 minutes (129—140 ℉, 50—60 ℃).

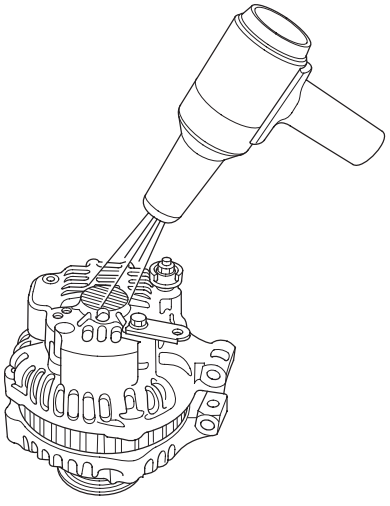

5. Separate the rear housing from the drive-end housing by inserting a flat tip screwdriver into the openings and prying them apart.

   NOTE: Be careful not to damage the stator with the tip of the screwdriver.

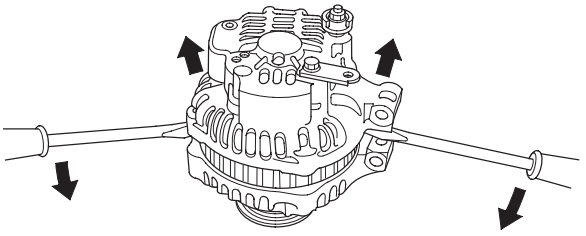

6. Separate the rear housing (A) and drive-end housing (B) with the stator (C) attached to the rear housing.

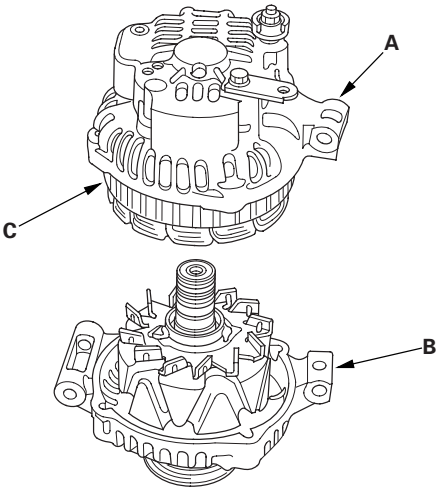

(cont'd)

Alternator Overhaul (cont'd)

7. If you are not replacing the front bearing and/or rear bearing, go to step 15. Clamp the rotor in a soft-jawed vise, then remove the pulley locknut.

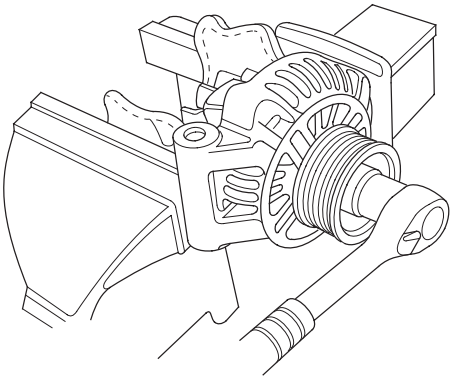

8. Remove the rotor using a puller as shown.

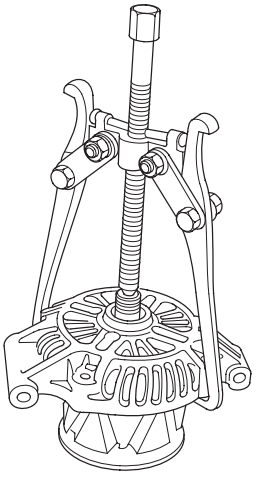

9. Inspect the rotor shaft for scoring, and inspect the bearing journal surface in the drive-end housing for seizure marks.

   - If either the rotor or drive-end housing is damaged, replace the alternator.
   - If both the rotor and the drive-end housing are OK, go to step 10.

10. Remove the rear bearing using the puller as shown.

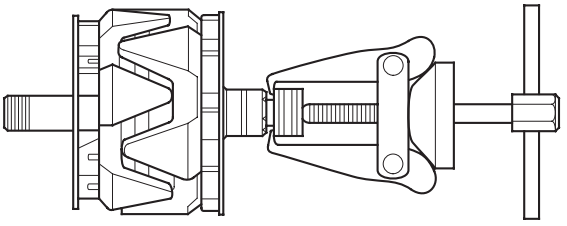

11. Use a hand press to install the new rear bearing. Apply pressure only on the inner race to avoid damaging the bearing.

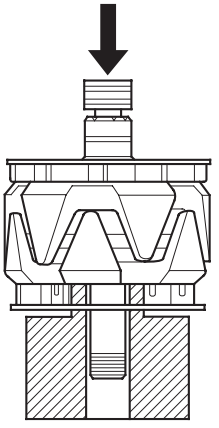

12. Remove the front bearing retainer plate.

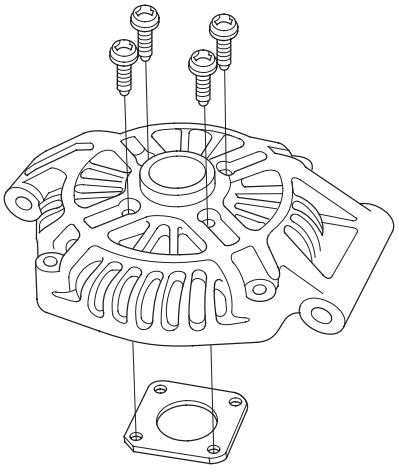

13. Support the drive-end housing in a vise, and drive out the front bearing with a brass drift and hammer.

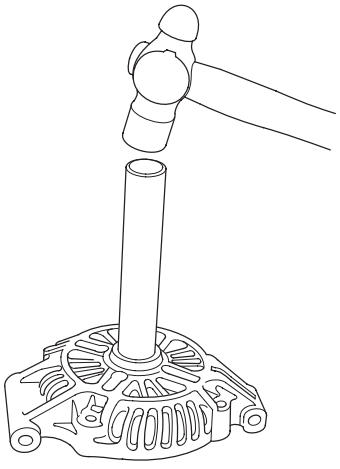

14. With a hammer and the special tools, install a new front bearing in the drive-end housing.

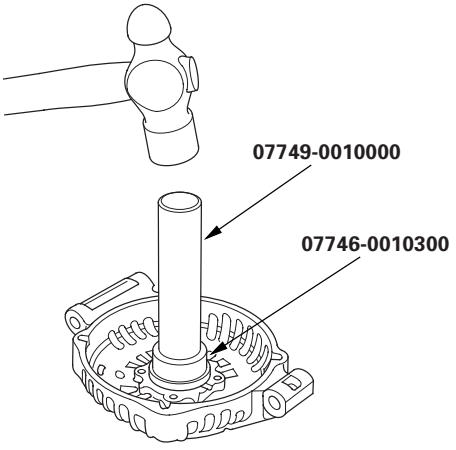

Alternator Brush Inspection

15. Measure the length of both brushes with vernier calipers.

    - If either brush is shorter than the service limit, replace the rear housing assembly.
    - If brush length is OK, go to step 16.

    Alternator Brush Length
    Standard (New): 15.5 mm (0.61 in.)
    Service Limit: 1.5 mm (0.06 in.)

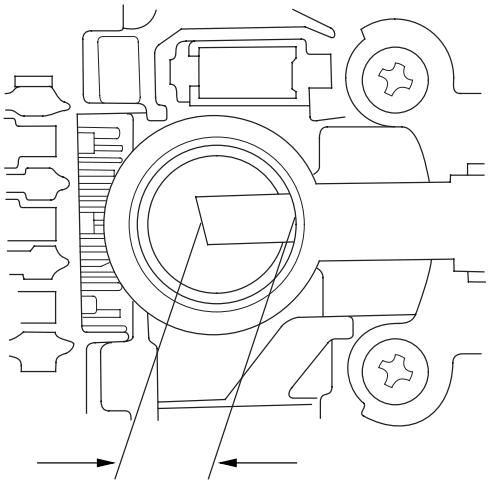

(cont'd)

Alternator Overhaul (cont'd)

Rotor Slip Ring Test

16. Check for continuity between the slip rings (A).

    - If there is continuity, go to step 17.
    - If there is no continuity, replace the rotor assembly.

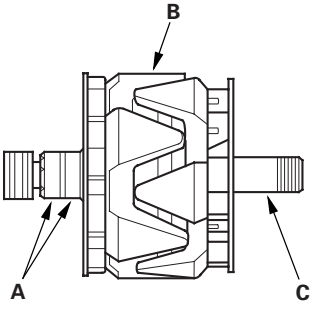

17. Check for continuity between each slip ring (A) and the rotor (B) and the rotor shaft (C).

    - If there is no continuity, replace the rear housing assembly, go to step 18.
    - If there is continuity, replace the rotor assembly.

Alternator Reassembly

18. If you removed the pulley, put the rotor in the drive-end housing, then tighten its locknut to 111 N·m (11.3 kgf·m, 81.7 lbf·ft).

19. Remove any grease or oil from the slip rings.

20. Push the brushes (A) in, then insert a pin or drill bit (B) (about 1.8 mm (0.77 in.) diameter) to hold them there.

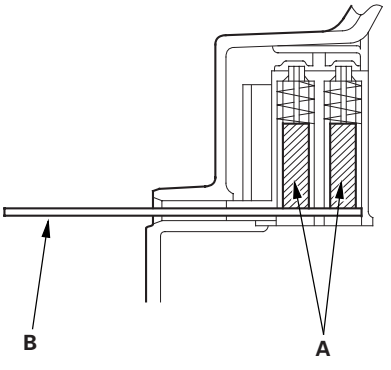

21. Heat the rear bearing seat with a 1,000 W hair drier for about 5 minutes (129—140 ℉, 50—60 ℃).

22. Put the rear housing assembly (A) and drive-end housing/rotor assembly (B) together, tighten the four through bolts (C), and pull out the pin (D).

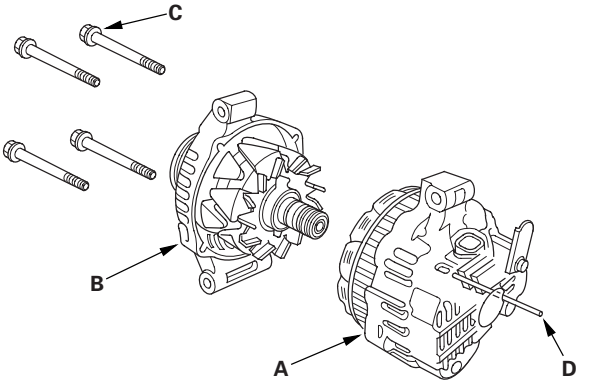

23. After assembling the alternator, turn the pulley by hand to make sure the rotor rotates smoothly and without noise.

24. Install the alternator and drive belt (see page 4-46).

Exploded View - K20A2, K20Z1 Engines

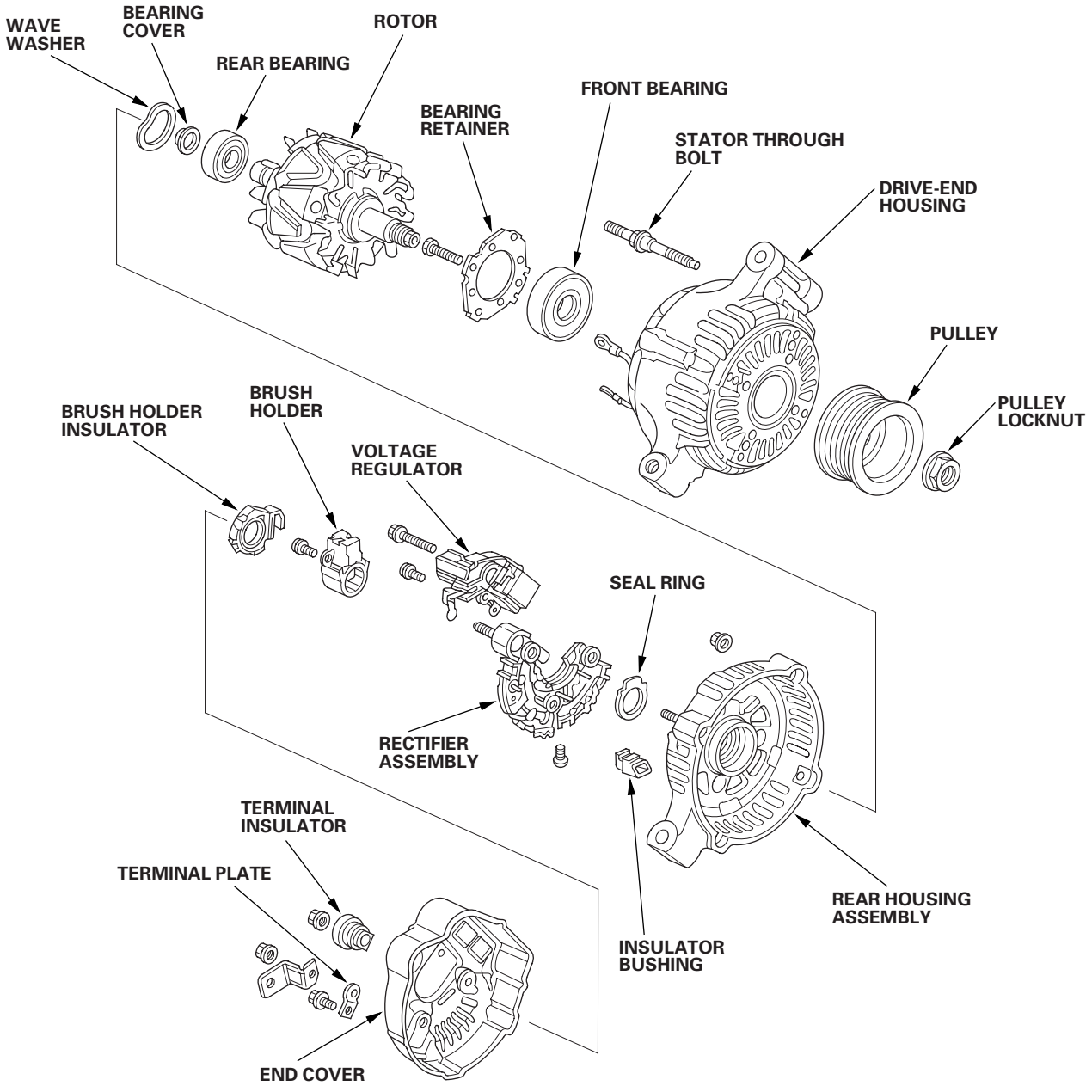

(cont'd)

Alternator Overhaul (cont'd)

Special Tools Required
• Driver 07749-0010000
• Attachment, 42 x 47 mm 07746-0010300

NOTE: Refer to the Exploded View as needed during this procedure.

Alternator Disassembly

1. Test the alternator and regulator before you remove them (see page 4-39).

2. Remove the alternator (see page 4-46).

3. If the front bearing needs replacing, remove the pulley locknut with a 10 mm wrench (A) and a 22 mm wrench (B). If necessary, use an impact wrench.

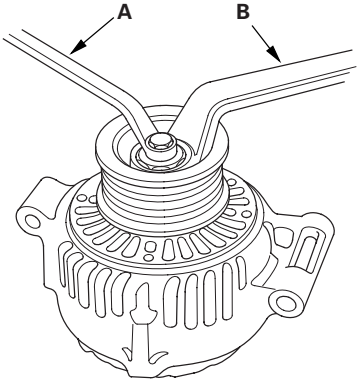

4. Remove the harness bracket (A), the insulator (B), the three flange nuts (C) and the screw (D), then remove the plate terminal (E).

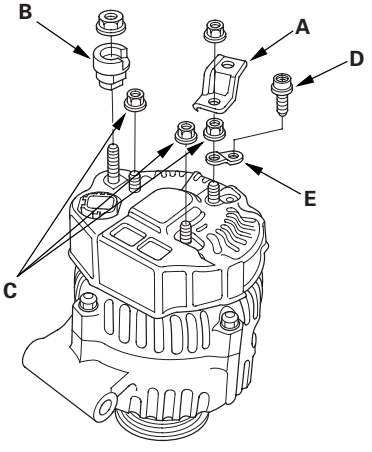

5. Remove the end cover (A) and the dust seal (B).

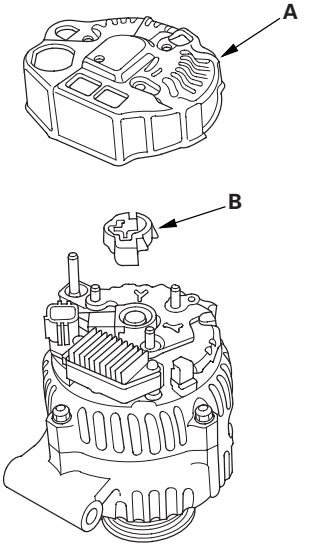

6. Remove the brush holder (A), the voltage regulator (B), and the rubber seal (C).

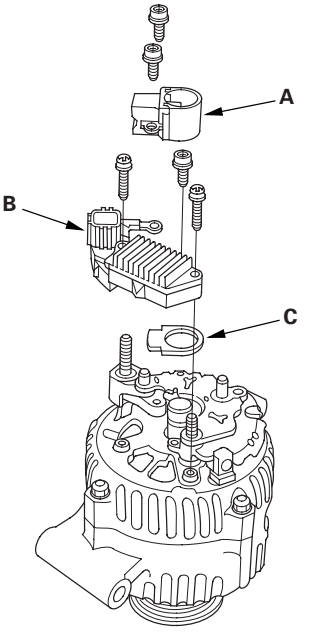

7. Remove the four screws, then remove the rectifier (A) and the four insulators (B).

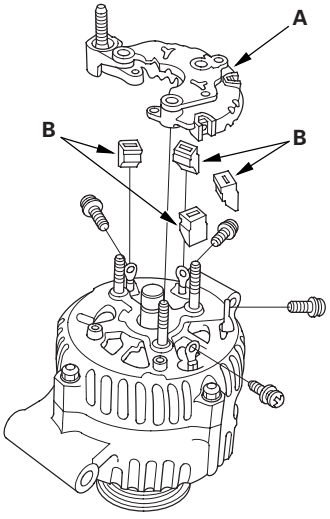

8. Remove the four flange nuts, then remove the rear housing (A) and the washer (B).

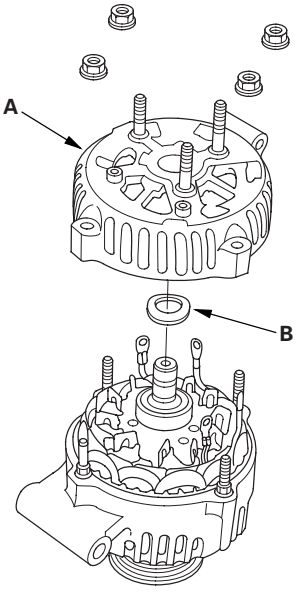

9. If you are not replacing the front bearing and/or rear bearing, go to step 16. Remove the rotor from the stator drive end housing.

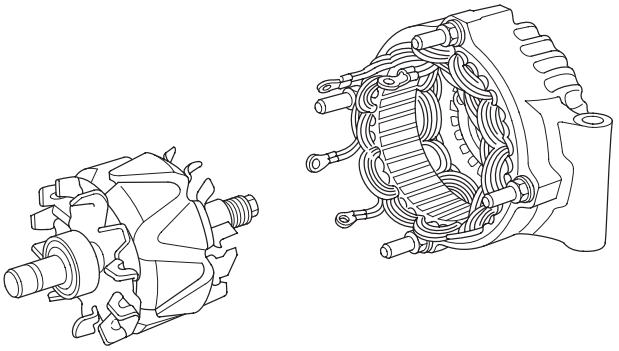

10. Inspect the rotor shaft for scoring, and inspect the bearing journal surface in the stator housing for seizure marks.

    - If either the rotor or stator housing is damaged, replace the alternator.
    - If both the rotor and the stator housing are OK, go to step 11.

11. Remove the rear bearing using a puller as shown.

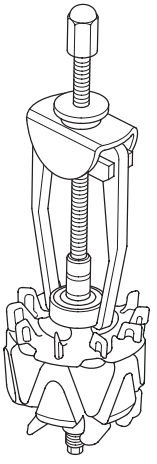

(cont'd)

Alternator Overhaul (cont'd)

12. With a hammer and commercially available tools shown, install a new rear bearing on the rotor shaft.

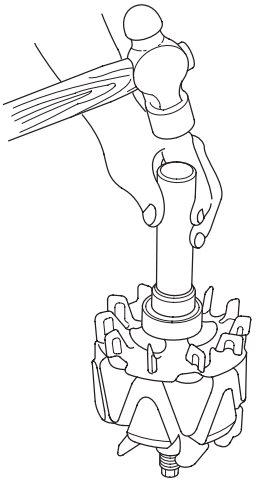

13. Remove the front bearing retainer plate.

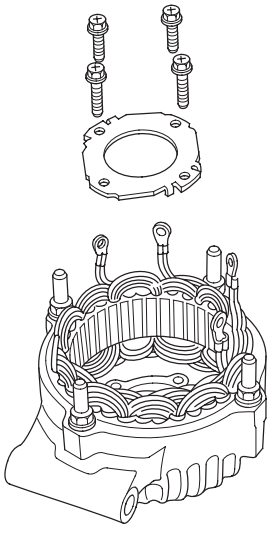

14. Support the stator housing in a vise, and drive out the front bearing with a brass drift and hammer.

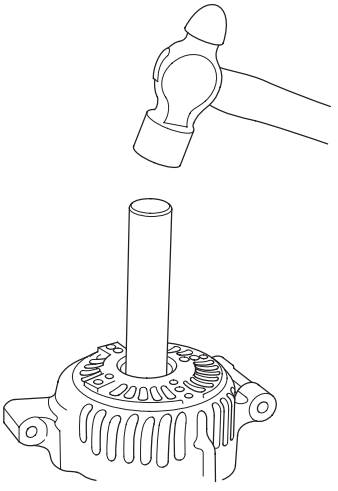

15. With a hammer and the special tools, install a new front bearing in the stator housing.

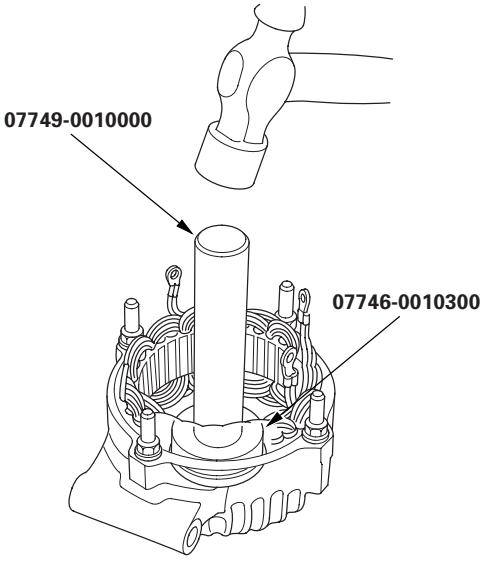

Rectifier Test

16. Check for continuity in each direction, between the B terminal and P terminals, and between the E terminal and P terminals of each diode pair.
    All diodes should have continuity in only one direction. Because the rectifier diodes are designed to allow current to pass in one direction, and the rectifier is made up of eight diodes (four pairs), you must test each diode in both directions for continuity with an ohmmeter that has diode checking capability: a total of 16 checks.

    - If any diode is faulty, replace the rectifier assembly. (Diodes are not available separately.)
    - If all the diodes are OK, go to step 17.

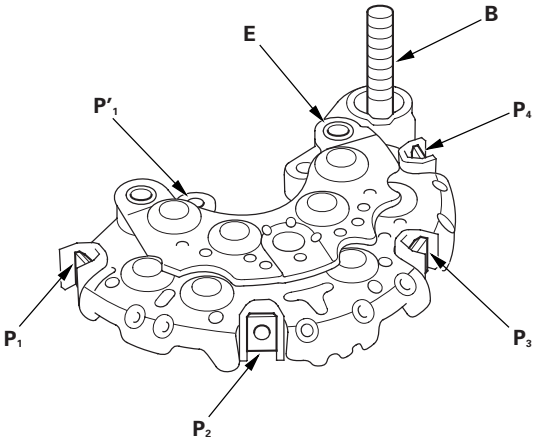

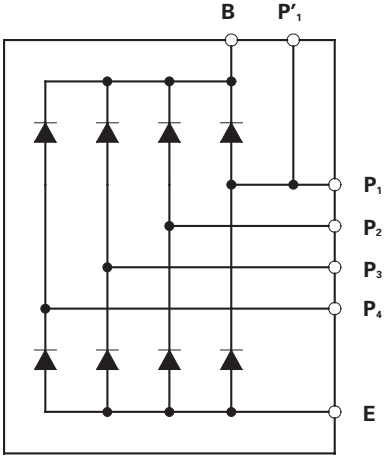

Alternator Brush Inspection

17. Measure the length of both brushes (A) with a vernier caliper (B).

    - If either brush is shorter than the service limit, replace the brush assembly.
    - If brush length is OK, go to step 18.

    Alternator Brush Length
    Standard (New): 10.5 mm (0.41 in.)
    Service Limit: 1.5 mm (0.06 in.)

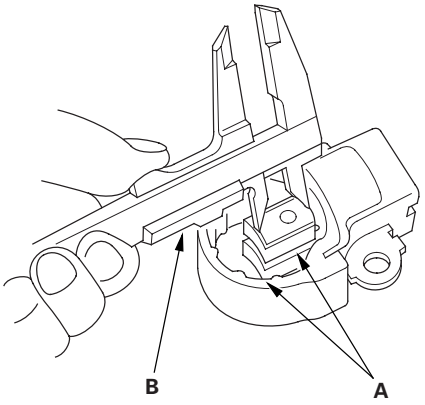

Rotor Slip Ring test

18. Check for continuity between the slip rings (A).

    - If there is continuity, go to step 19.
    - If there is no continuity, replace the alternator.

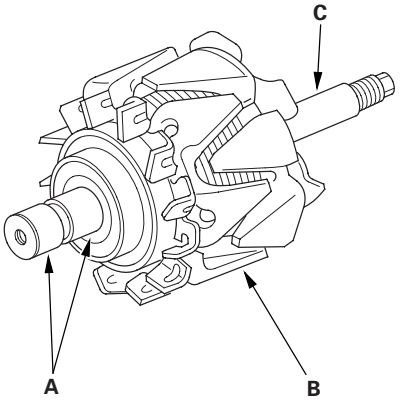

19. Check for continuity between each slip ring and the rotor (B) and the rotor shaft (C).

    - If there is no continuity, go to step 20.
    - If there is continuity, replace the alternator.

(cont'd)

Alternator Overhaul (cont'd)

Stator Test

20. Check for continuity between each pair of leads (A).

    - If there is continuity, go to step 21.
    - If there is no continuity, replace the alternator.

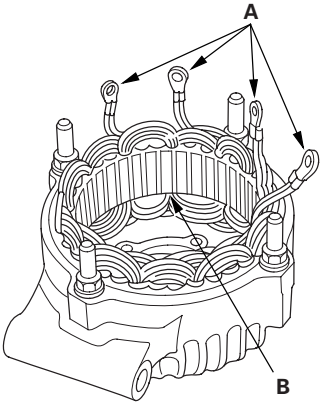

21. Check for continuity between each lead and the coil core (B).

    - If there is no continuity, go to step 22.
    - If there is continuity, replace the alternator.

22. Assemble the alternator in the reverse order of disassembly, and note these items:

    - Be careful not to get any grease or oil on the slip rings.
    - If you removed the pulley, tighten its locknut to 111 N·m (11.3 kgf·m, 81.7 lbf·ft) when you install it.

Component Location Index

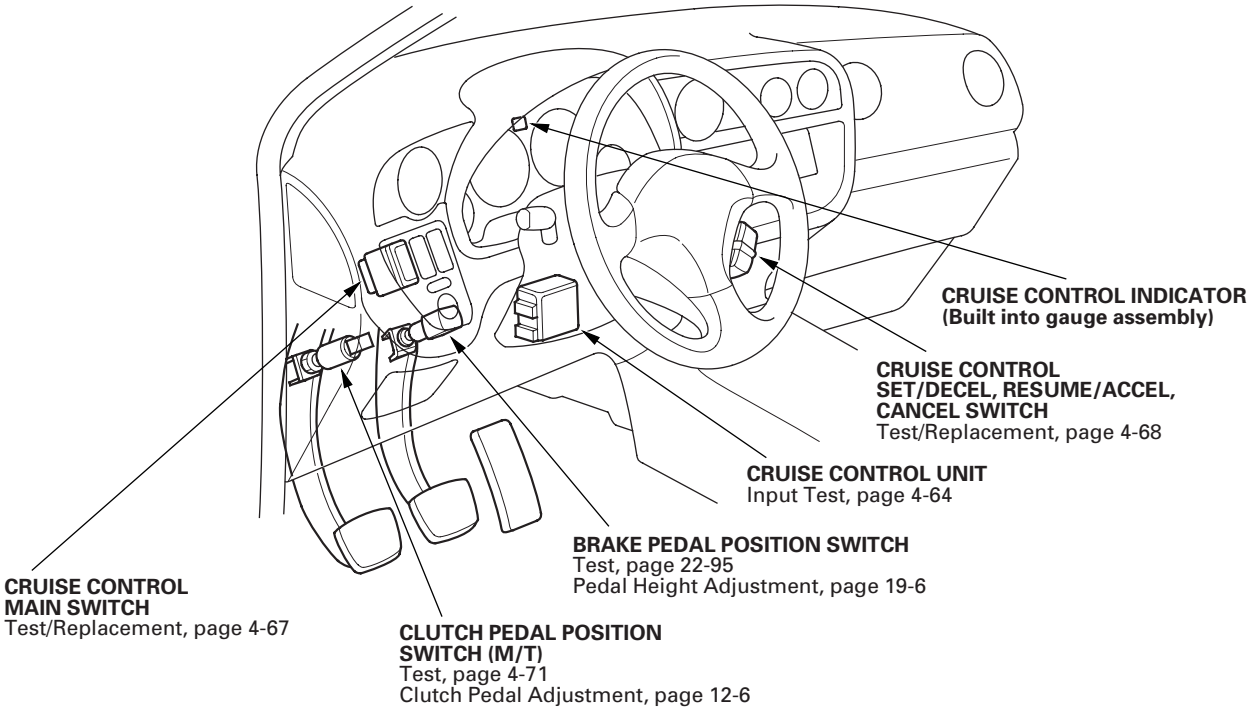

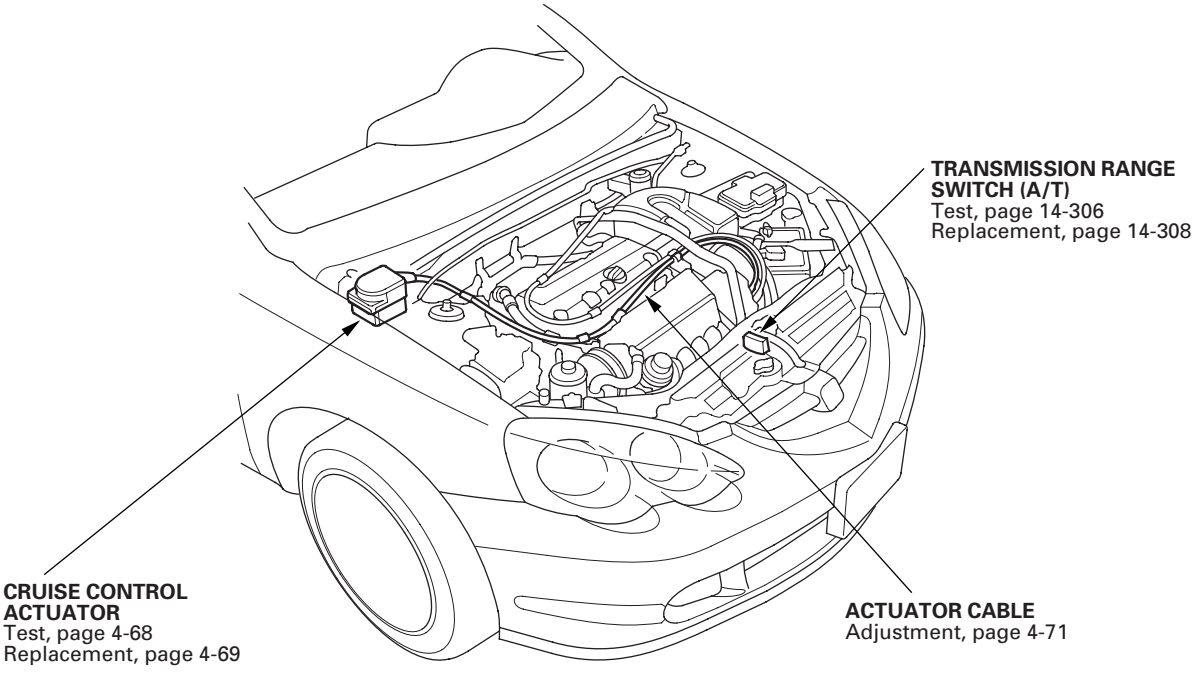

Symptom Troubleshooting Index

Symptom	Diagnostic procedure	Also check for
Cruise control cannot be set	1. Check for PGM-FI DTCs (see page 11-3). 2. Check horn operation. 3. Check cruise control set/decel, resume/accel, cancel switch (see page 4-68). 4. Test brake pedal position switch (see page 22-95) and check its adjustment (see page 19-6). 5. Test clutch pedal position switch (see page 4-71) and check its adjustment (M/T) (see page 12-6). 6. Check transmission range switch (A/T) (see page 14-306). 7. Do cruise contrtol unit input test (see page 4-64). 8. Check for continuity between powertrain control module (PCM) connector terminal E25 and cruise control unit 14P connector terminal No. 12. (A/T) • If there is continuity, replace PCM. – 2002-2004 models (see page 11-284) – 2005-2006 models (see page 11-284) • If there is no continuity, repair open or short in the wire.	• Blown No. 4 (10 A) fuse in the under-hood fuse/relay box • Blown No. 7 (15 A) fuse in the under-dash fuse/relay box • Poor ground: G101 (A/T), G402 (M/T), G401, G451 • Faulty horn relay • Open circuit, loose or disconnected terminals between cruise control unit and cruise control inputs
Cruise control can be set, but the cruise control indicator does not come on	1. Do the gauge assembly module self-diagnostic function procedure (see page 22-68). 2. Do cruise control unit input test on pin No. 10 (see page 4-64).	Open circuit, loose or disconnected terminals: BLU/YEL
Cruise speed is noticeably higher or lower than what was set	1. Check cruise control actuator (see page 4-68). 2. Adjust the cruise control cable (see page 4-71). 3. Do cruise control unit input test on pin No. 12 (see page 4-64).	
Excessive overshooting or undershooting when trying to set speed	1. Check cruise control actuator (see page 4-68). 2. Adjust the cruise control cable (see page 4-71). 3. Do cruise control unit input test on pin No. 12 (see page 4-64).	
Speed fluctuates on a flat road with the cruise control set	1. Check cruise control actuator (see page 4-68). 2. Adjust the cruise control cable (see page 4-71). 3. Do cruise control unit input test on pin No. 12 (see page 4-64).	
Vehicle does not decelerate or accelerate accordingly when the set/decel or resume/accel switch is pressed	1. Chcek cruise control set/decel, resume/accel, cancel switch (see page 4-68). 2. Do cruise control unit input test on pins No. 6 and No. 7 (see page 4-64).	Open circuit, loose or disconnected terminals: GRY/RED, LT GRN/BLK, BLK/RED, BLK/ORN
Set speed does not cancel (engine rpm stays high) when the clutch pedal is pressed (M/T)	1. Test clutch pedal position switch (see page 4-71) and check its adjustment (see page 12-6). 2. Do cruise control unit input test on pin No. 14 (see page 4-64).	Short to ground in the LT BLU wire
Set speed does not cancel (engine rpm stays high) when the shift lever is moved to N (A/T)	1. Chcek transmission range switch (see page 14-306). 2. Do cruise control unit input test on pin No. 14 (see page 4-64).	Short to ground in the LT BLU, BLU/YEL, YEL/RED wires

Symptom	Diagnostic procedure	Also check for
Set speed does not cancel when the brake pedal is pressed	1. Test brake pedal position switch (see page 22-95) and check its adjustment (see page 19-6). 2. Do cruise control unit input test on pins No. 2 and No. 5 (see page 4-64).	Short to power on BLU wire
Set speed does not cancel when the cruise control main switch is turned off	1. Check cruise control main switch (see page 4-67). 2. Do cruise control unit input test on pin No. 13 (see page 4-64).	Short power in the LT GRN wire
Set speed does not cancel when the cancel switch is pressed	1. Check cruise control set/decel, resume/accel, cancel switch (see page 4-68). 2. Do cruise control unit input test on pins No. 6 and No. 7 (see page 4-64).	Open circuit, loose or disconnected terminals: GRY/RED, LT GRN/BLK
Set speed will not resume when the resume/accel switch is pressed (with the cruise control main switch turned on, and set speed temporarily canceled by pressing the brake pedal)	1. Check cruise control set/decel, resume/accel, cancel switch (see page 4-68). 2. Do cruise control unit input test on pins No. 6 and No. 7 (see page 4-64).	• Faulty brake pedal position switch • Open circuit, loose or disconnected terminals: LT GRY/BLK
The transmission shifts down slower than normal when going uphill with the cruise control on (A/T)	Troubleshoot the cruise control communication circuit (see page 4-63).	Open circuit, loose or disconnected terminals: BLU/ORN

Circuit Diagram

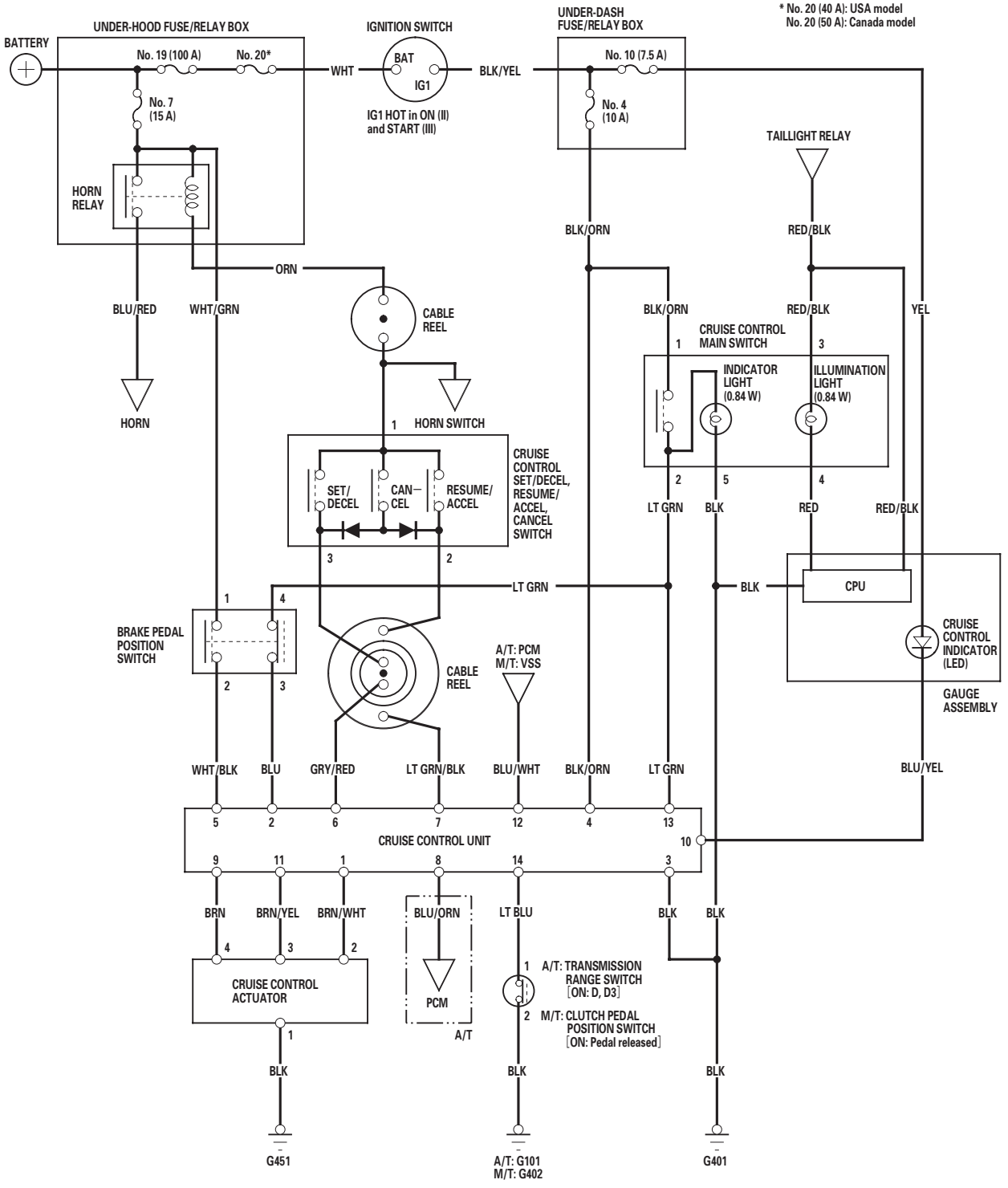

Cruise Control Communication Circuit Troubleshooting

A/T

1. Start the engine.

2. Turn on the cruise control main switch, then drive the vehicle at speeds over 25 mph (40 km/h) with the cruise control set.

   Does the cruise control operate?

   YES—Go to step 3.

   NO—Check the cruise control unit (see page 4-64) or cruise control actuator (see page 4-68). ■

3. Turn the ignition switch OFF.

4. 2005-2006 models: Connect the HDS to the data link connector (DLC) (see step 2 on page 11-3). Select SCS mode using the HDS.

5. Disconnect PCM connector D (17P) and cruise control unit 14P connector.

6. Check for continuity between PCM connector terminal D12 and body ground.

PCM CONNECTOR D (17P)

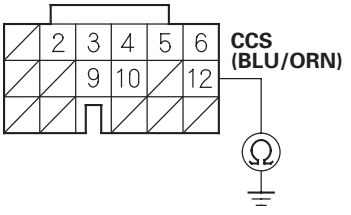

Wire side of female terminals

   Is there continuity?

   YES—Repair a short to ground in the wire between PCM connector terminal D12 and the cruise control unit 14P connector terminal No. 8. ■

   NO—Go to step 7.

7. Reconnect PCM connector D (17P) and the cruise control unit 14P connector.

8. Connect a voltmeter between cruise control unit 14P connector terminal No. 8 and body ground. Test-drive the vehicle at speeds over 25 mph (40 km/h) with the cruise control set, and watch the voltmeter.

CRUISE CONTROL UNIT 14P CONNECTOR

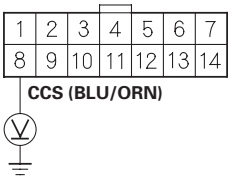

Wire side of female terminals

   Is there about 1 V?

   YES—Go to step 9.

   NO—Replace the cruise control unit. ■

9. Connect a voltmeter between PCM connector terminal D12 and body ground. Drive the vehicle at speeds over 25 mph (40 km/h) with the cruise control set, and watch the voltmeter.

PCM CONNECTOR D (17P)

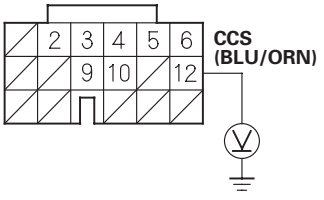

Wire side of female terminals

   Is there about 1 V?

   YES—Check for loose connectors of the BLU/ORN wire between the cruise control unit and the PCM. If the wire is OK, update the PCM if it does not have the latest software (see page 11-6), or substitute a known-good PCM (see page 11-7), and recheck. If the system works properly, replace the original PCM (see page 11-284). ■

   NO—Repair an open in the wire between PCM connector terminal D12 and the control unit 14P connector terminal No. 8. ■

Cruise Control Unit Input Test

SRS components are located in this area. Review the SRS component locations (see page 23-10) and precautions and procedures (see page 23-11), before doing repairs or service.

1. Disconnect the 14P connector from the control unit.

2. Inspect the connector and socket terminals to make sure they are all making good contact.

   - If the terminals are bent, loose, or corroded, repair them as necessary, and recheck the system.
   - If the terminals look OK, go to step 3.

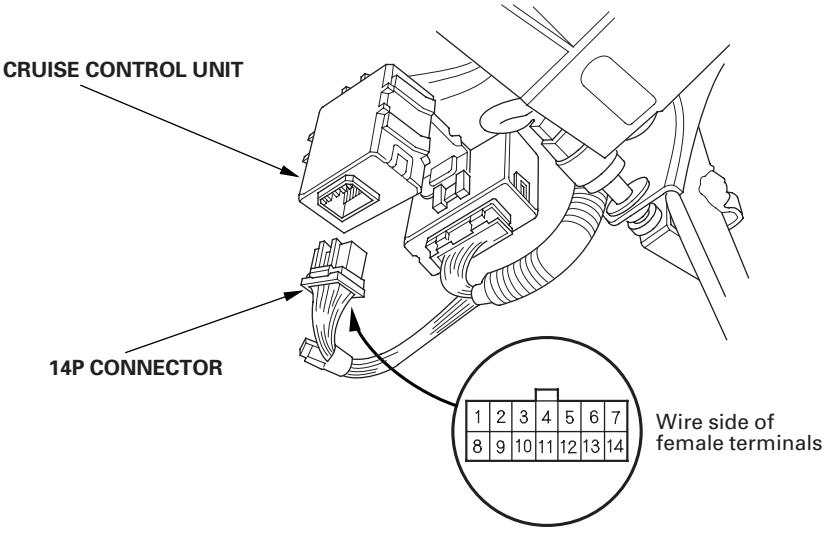

3. With the 14P connector disconnected, do these input tests.

   - If a test indicates a problem, find and correct the cause, then recheck the system.
   - If all the input tests prove OK, the cruise control unit may be faulty. Substitute a know-good cruise control unit and retest. If the system works properly, replace the cruise control unit.

Cavity	Wire	Test condition	Test: Desired result	Possible cause if result is not obtained
1	BRN/WHT	Connect battery power	Check the operation of the magnetic clutch: Clutch should click and output link should be locked.	• Faulty actuator • Poor ground (G451) • An open in the wire • Short to ground
2	BLU	Ignition switch ON (II), cruise control main switch ON and brake pedal pressed, then released	Check for voltage to ground: There should be 0 V with the pedal pressed and battery voltage with the pedal released.	• Faulty brake pedal position switch • An open in the wire • Open in cruise control main switch • Blown No. 4 (10 A) fuse in the under-dash fuse/relay box

Cavity	Wire	Test condition	Test: Desired result	Possible cause if result is not obtained
3	BLK	Under all conditions	Check for continuity to ground: There should be continuity.	• Poor ground (G401) • An open in the wire
4	BLK/ORN	Ignition switch ON (II)	Check for voltage to ground: There should be battery voltage.	• Blown No. 4 (10 A) fuse in the under-dash fuse/relay box • An open in the wire
5	WHT/BLK	Brake pedal pressed, then released	Check for voltage to ground: There should be battery voltage with the pedal pressed, and 0 V with the pedal released.	• Blown No. 7 (15 A) fuse in the under-hood fuse/relay box • Faulty brake pedal position switch • An open in the wire
6	GRY/RED	Set/decel switch pressed	Check for voltage to ground: There should be battery voltage. When testing terminal No. 6, there should be no voltage on terminal No. 7.	• Blown No. 7 (15 A) fuse in the under-hood fuse/relay box • Faulty horn relay • Faulty cruise control set/decel, resume/accel, cancel switch • Faulty cable reel • An open in the wire
7	LT GRN/ BLK	Resume/accel switch pressed	Check for voltage to ground: There should be battery voltage. When testing terminal No. 7, there should be no voltage on terminal No. 6.	
9	BRN	Connect battery power to the BRN terminal and ground to the BRN/ YEL terminal	Check the operation of the actuator motor: You should be able to hear the motor.	• Faulty actuator • An open in the wires • Poor ground (G452)
11	BRN/YEL			
10	BLU/YEL	Ignition switch ON (II)	Attach to ground: Cruise control indicator in the gauge assembly should comes on.	• Blown No. 10 (7.5 A) fuse in the under-dash fuse/relay box • Faulty gauge assembly • An open in the wire
12	BLU/WHT	Ignition switch ON (II) and cruise control main switch ON; raise the front of the vehicle, and rotate one wheel slowly while holding the other wheel NOTE: This input test must be done with the 14P connector reconnected.	Check for voltage between the BLU/WHT and ground terminal: There should be 0—5 V or more repeatedly.	• Faulty PCM (A/T) • Faulty VSS (M/T) • An open in the wire • Short to ground
13	LT GRN	Ignition switch ON (II) and cruise control main switch ON	Check for voltage to ground: There should be battery voltage.	• Blown No. 4 (10 A) fuse in the under-dash fuse/relay box • Faulty cruise control main switch • An open in the wire

(cont'd)

Cruise Control Unit Input Test (cont'd)

Cavity	Wire	Test condition	Test: Desired result	Possible cause if result is not obtained
14	LT BLU	A/T: Shift lever in D or D3 M/T: Clutch pedal released	Check for continuity to ground: There should be continuity. NOTE: There should be no continuity when the clutch pedal is pressed or when the shift lever is in other positions.	• Faulty transmission range switch • Faulty clutch pedal position switch • Poor ground (M/T: G402, A/T: G101) • An open in the wire
8	BLU/ORN	Reconnect the cruise control unit 14P connector, start the engine turn the cruise control main switch ON and drive the vehicle at speeds over 25 mph (40 km/h) with the cruise control set	Check for voltage to ground: There should be about 1 V.	• Faulty cruise control unit • Short to ground • An open in the wire

Cruise Control Main Switch Test/Replacement

1. Gently pry up on the driver's switch panel (A) to release the hooks (B), then pull out the panel.

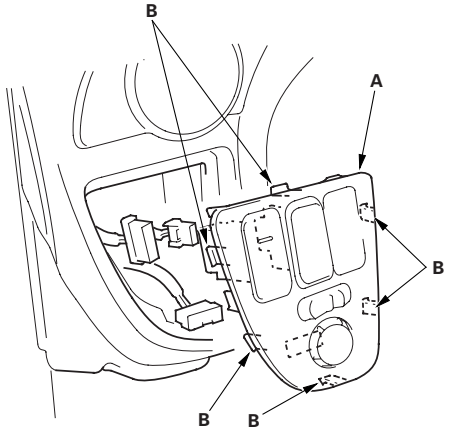

2. Release the clips, and push the cruise control main switch (A) out of the panel, then disconnect the 5P connector (B) from the cruise control main switch.

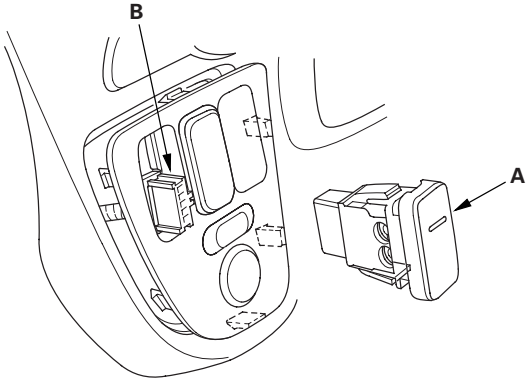

3. Check for continuity between the terminals in each switch position according to the table. If the continuity is not as specified, replace the illumination bulbs (A) or the switch.

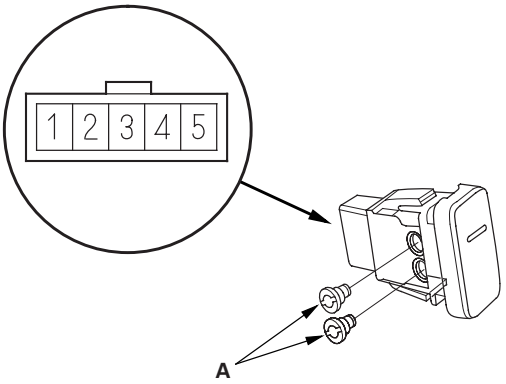

Position \ Terminal	2		5	1	3		4
OFF	○	⊗	○		○	⊗	○
ON	○	⊗	○	○	○	⊗	○

Cruise Control Set/decel, Resume/accel, Cancel Switch Test/Replacement

SRS components are located in this area. Review the SRS component locations (see page 23-10), and the precautions, and procedures (see page 23-11), before performing repairs or service.

1. Remove the two screws, then remove the switch.

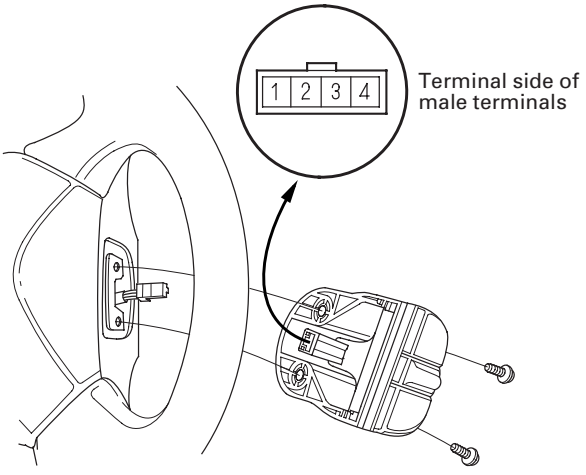

2. Check for continuity between the terminals in switch position according to the table.
   - If there is continuity, and it matches the table, but switch failure occurred on the cruise control unit input test, check and repair the wire harness on the switch circuit.
   - If there is no continuity in one or both positions, replace the switch.

Position \ Terminal	1		2	3
Set/decel (PRESSED)	○			○
Resume/accel (PRESSED)	○		○	
Cancel (PRESSED)	○	▶ ▶	○	○

Cruise Control Actuator Test

1. Disconnect the 4P connector (A) from the cruise control actuator (B).

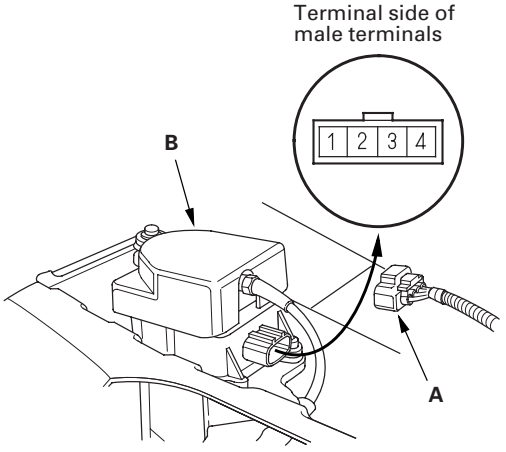

2. Remove the cover (A), and check the output linkage (B) for smooth movement.

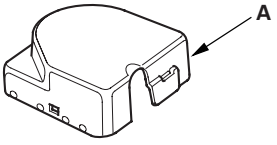

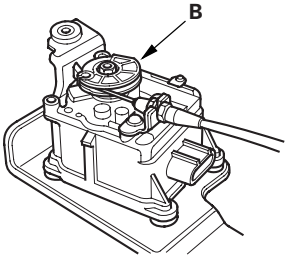

3. Connect the battery power to the No. 2 terminal and ground to the No. 1 terminal.

4. Check for a clicking sound from the magnetic clutch. The output linkage should be locked.

5. If the output linkage is not locked, replace the cruise control actuator assembly.

6. Check the operation of the actuator motor in each output linkage position according to the table. You should be able to hear the motor.

Battery power polarities		Output linkage position		
(+)	(−)	FULL CLOSE	MIDDLE POSITION	FULL OPEN
No. 4 Terminal	No. 3 Terminal	The motor runs.	The motor runs.	The motor stops.
No. 3 Terminal	No. 4 Terminal	The motor stops.	The motor runs.	The motor runs.

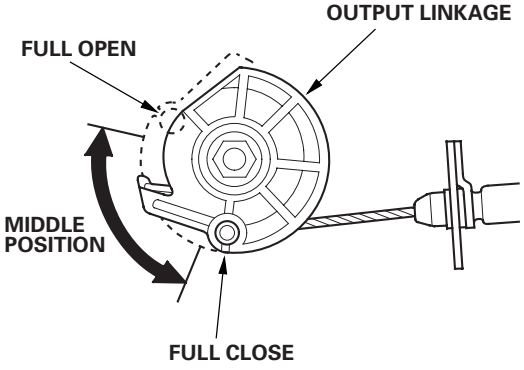

Cruise Control Actuator/Cable Replacement

1. K20A3 engine: Remove the throttle cover (A), fully open the cruise control link by hand, then remove the cruise control cable (B) from link. Loosen the locknut (C), and remove the cable from the bracket.

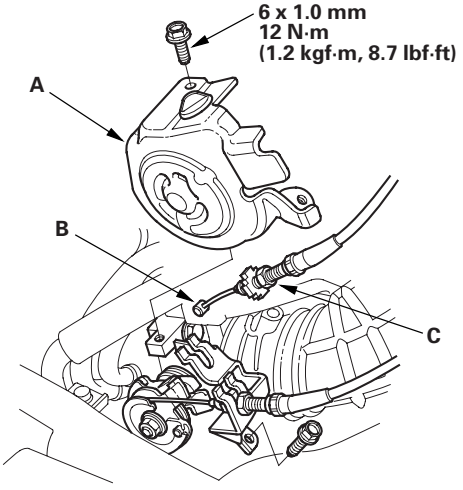

2. K20A2, K20Z1 engines: Fully open the cruise control link by hand, then remove the cruise control cable (A) from the link. Loosen the locknut (B), and remove the cable from the bracket.

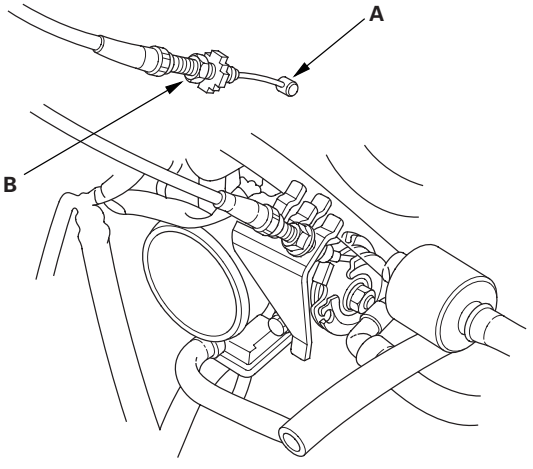

(cont'd)

Cruise Control Actuator/Cable Replacement (cont'd)

3. Remove the cowl cover (see page 20-105).

4. Disconnect the 4P connector, and remove the two bolts securing the cruise control actuator.

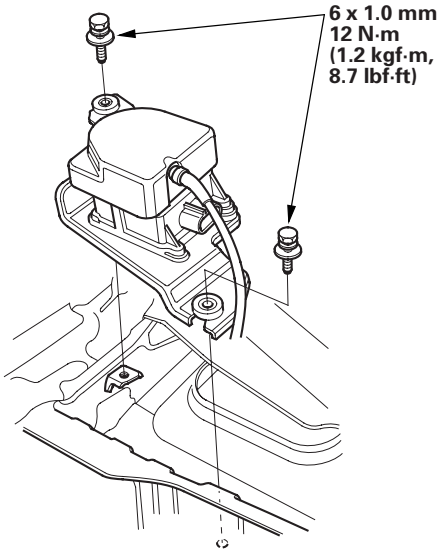

5. Remove the actuator cover (A), then remove the actuator cable (B) from the cruise control actuator.

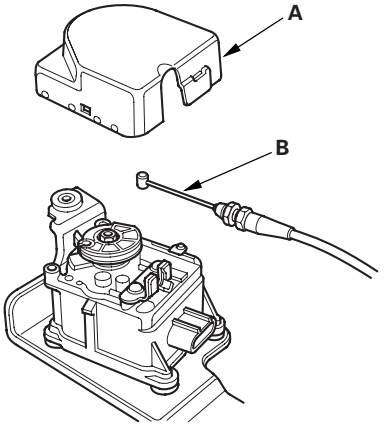

6. Remove the bracket from the cruise control actuator.

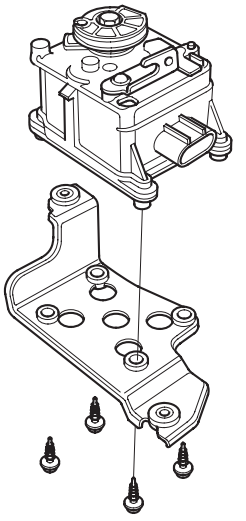

7. Install in the reverse order of removal, and adjust the free play at the throttle linkage after connecting the actuator cable.

Cruise Control Actuator Cable Adjustment

1. Check that the actuator cable (A) moves smoothly with no binding or sticking.

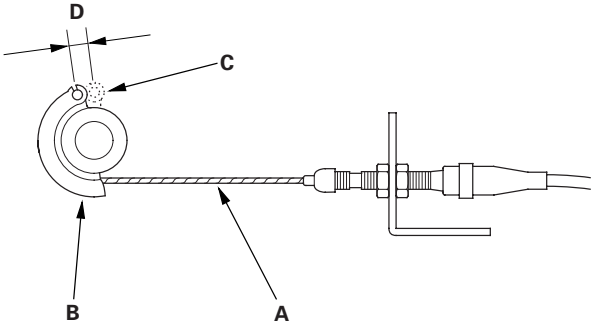

2. Measure the amount of movement of the output linkage (B) until the engine speed starts to increase. At first, the output linkage should be located at the fully closed position (C). The free play (D) should be 3.75±0.5 mm (0.15±0.02 in.).

3. If the free play is not within specifications, loosen the locknut, and turn the adjusting nut until the free play is as specified, then retighten the locknut.

Clutch Pedal Position Switch Test

1. Disconnect the 2P connector from the clutch pedal position switch (A).

CLUTCH PEDAL POSITION SWITCH 2P CONNECTOR

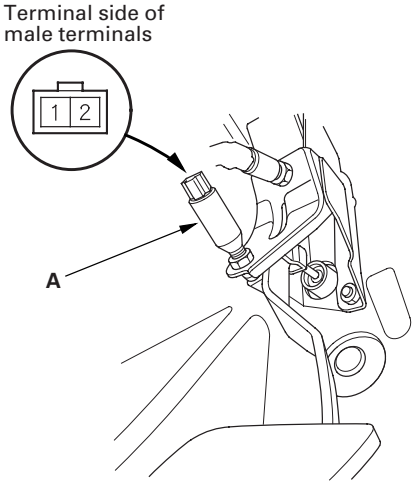

2. Remove the clutch pedal position switch.

3. Check for continuity between the terminals according to the table.

   - If the continuity is not as specified, replace the clutch pedal position switch.
   - If OK, install the clutch pedal position switch, and adjust the pedal height (see page 12-6).

Terminal / Clutch Pedal Position Switch	1	2
PRESSED		
RELEASED	○	○

Engine Mechanical

Engine Assembly
Engine Removal 5-2
Engine Installation 5-11
Engine Mount Replacement 5-21

Cylinder Head 6-1

Engine Block 7-1

Engine Lubrication 8-1

Intake Manifold and Exhaust System 9-1

Engine Removal

NOTE:
- Use fender covers to avoid damaging painted surfaces.
- To avoid damaging the wire and terminals, unplug the wiring connectors carefully while holding the connector portion.
- Mark all wiring and hoses to avoid misconnection. Also, be sure that they do not contact other wiring or hoses, or interfere with other parts.

1. Secure the hood in the wide open position (support rod in the lower hole).
2. Make sure you have the anti-theft code for the radio, then write down the customer's audio presets.
3. Relieve fuel pressure (see page 11-360).
4. Disconnect the negative cable from the battery first, then disconnect the positive cable.
5. Remove the battery.
6. Remove the intake manifold cover.

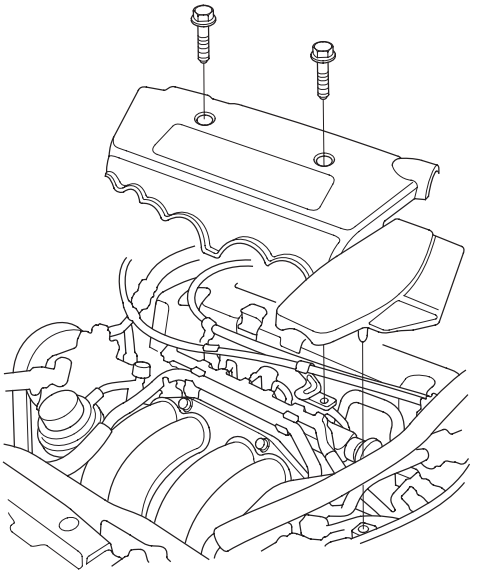

7. Disconnect the intake air temperature (IAT) sensor connector (A), and remove the breather hose (B), then remove the air cleaner housing (C).

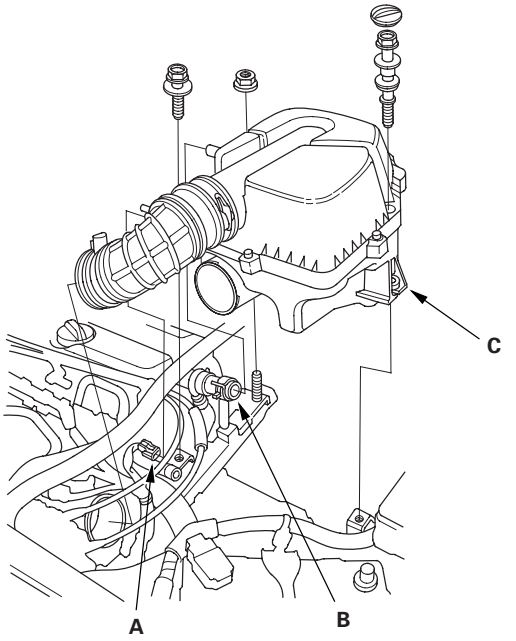

8. Remove the air intake duct.

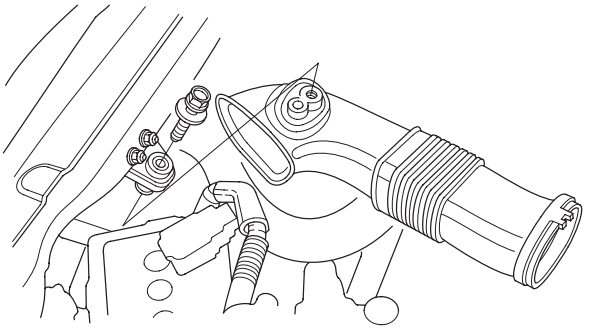

9. Remove the battery cable (A) from the under-hood fuse/relay box, then remove the harness clamps (B) and ground cable (C).

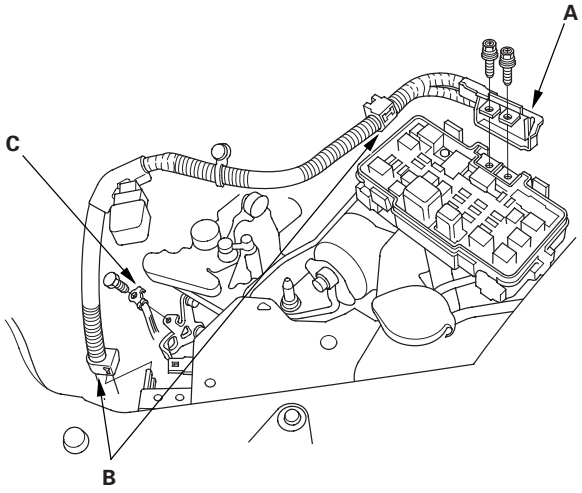

10. K20A3 engine: Remove the throttle cover (A). Fully open the throttle link and cruise control link by hand, then remove the throttle cable (B) and cruise control actuator cable (C) from the links. Loosen the locknuts (D), and remove the cables from the bracket.

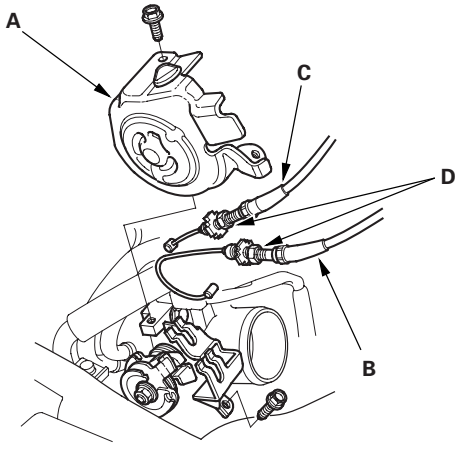

11. K20A2, K20Z1 engines: Fully open the throttle link and cruise control link by hand, then remove the throttle cable (A) and cruise control actuator cable (B) from the links. Loosen the locknuts (C), and remove the cables from the bracket.

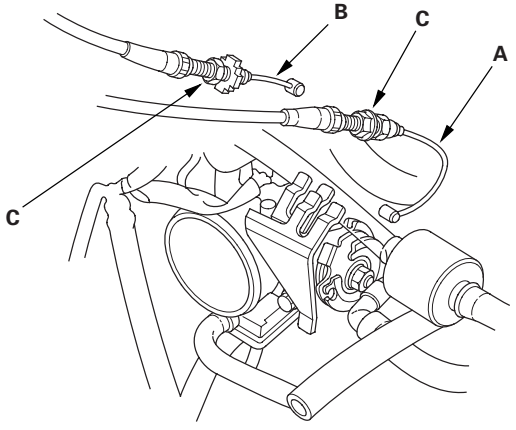

(cont'd)

Engine Removal (cont'd)

12. Disconnect the engine control module (ECM)/ powertrain control module (PCM) connectors (A) and main wire harness connector (B).

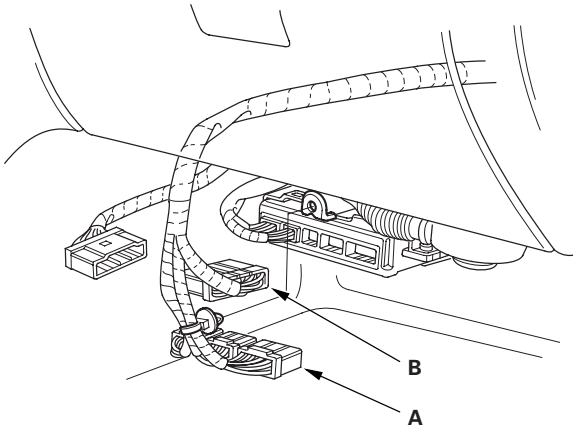

13. Remove the harness clamps (A) and grommet (B), then pull the engine wire harness through the bulkhead.

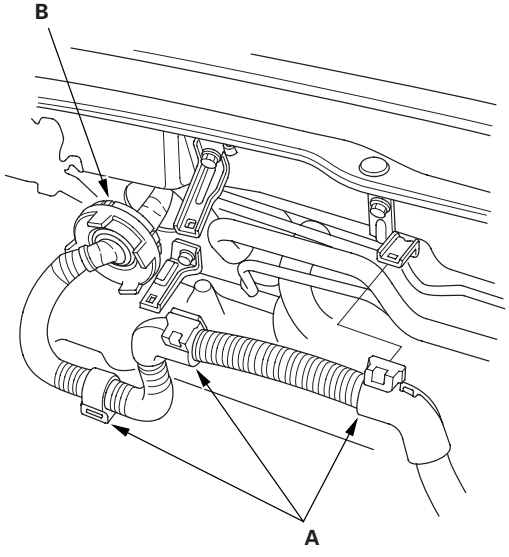

14. Remove the fuel feed line (see page 11-369).

15. Remove the evaporative emission (EVAP) canister hose (A) and brake booster vacuum hose (B).

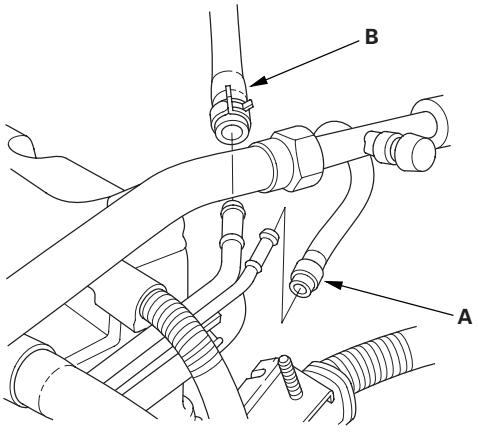

16. Remove the clutch slave cylinder (A) and clutch line bracket mounting bolt (B) (M/T).

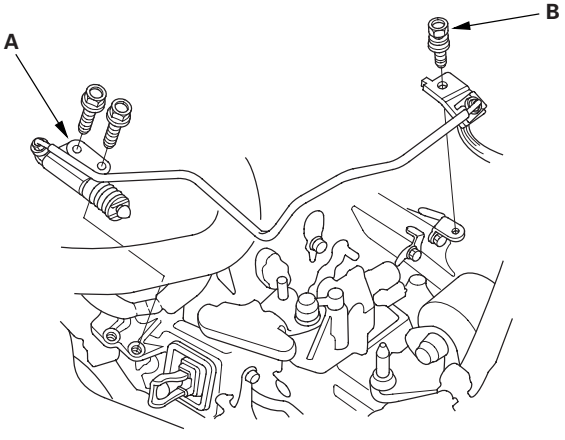

17. Remove the shift cable (A) and select cable (B) (M/T).

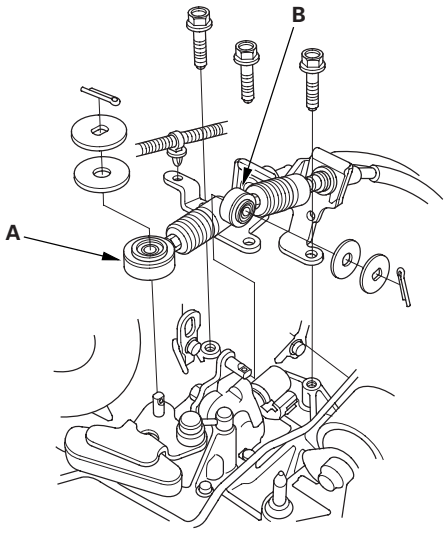

18. Remove the drive belt (see page 4-43).

19. Remove the power steering (P/S) pump without disconnecting the P/S hoses.

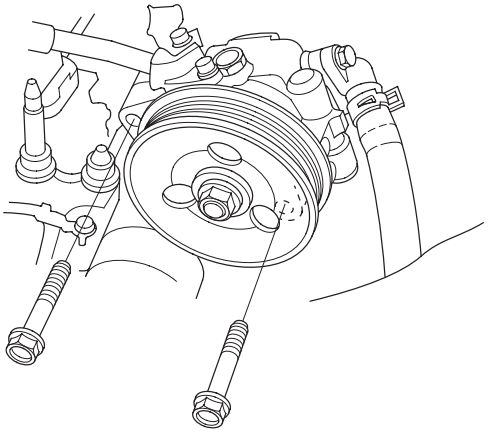

20. Remove the bolt securing the P/S hose bracket.

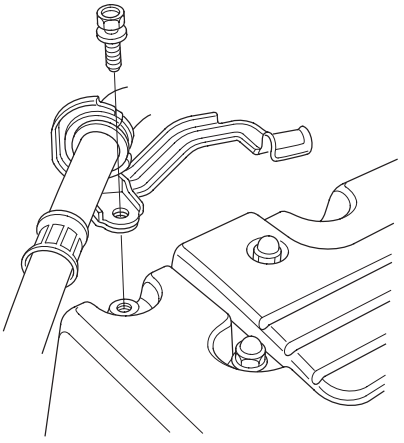

21. Remove the radiator cap.

22. Raise the vehicle on the hoist to full height.

23. Remove the front wheels.

24. Remove the splash shield.

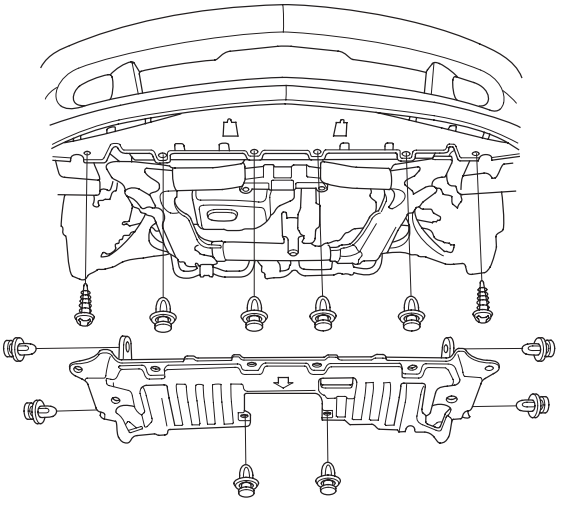

25. Loosen the drain plug in the radiator, and drain the engine coolant (see page 10-6).

26. Drain the transmission fluid:

    - Manual transmission (see page 13-4).
    - Automatic transmission (see page 14-272).

27. Drain the engine oil (see page 8-8).

(cont'd)

Engine Removal (cont'd)

28. Disconnect the air fuel ratio (A/F) sensor connector (A) and secondary heated oxygen sensor (secondary HO2S) connector (B).

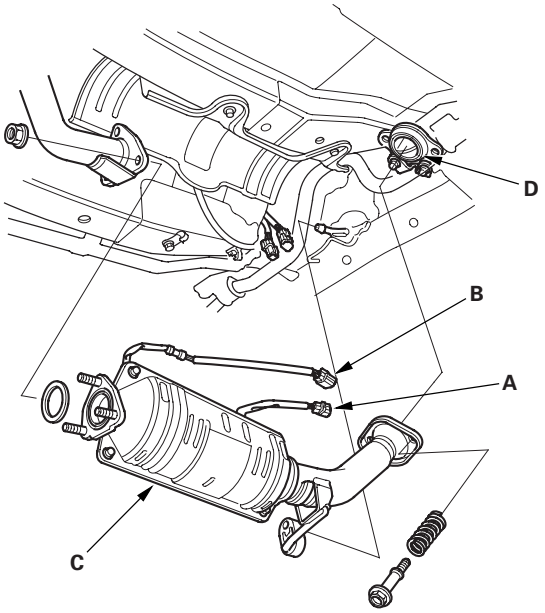

29. Remove the three way catalytic converter (TWC) assembly (C).

30. 2005-2006 models: Check the flexible joint gasket (D) for damage. If the flexible joint gasket is damaged, replace the flexible joint gasket (see page 9-16).

    NOTE: Do not reuse the flexible joint gasket, when removing it.

31. Disconnect the suspension lower arm ball joints (see page 18-10) and the stabilizer links (see page 18-18).

32. Remove the driveshafts (see page 16-4). Coat all precision finished surfaces with clean engine oil. Tie plastic bags over the driveshaft ends.

33. Remove the shift cable holder (A), then remove the shift cable cover (B). To prevent damage to the control lever joint, be sure to remove the bolts securing the shift cable cover (A/T).

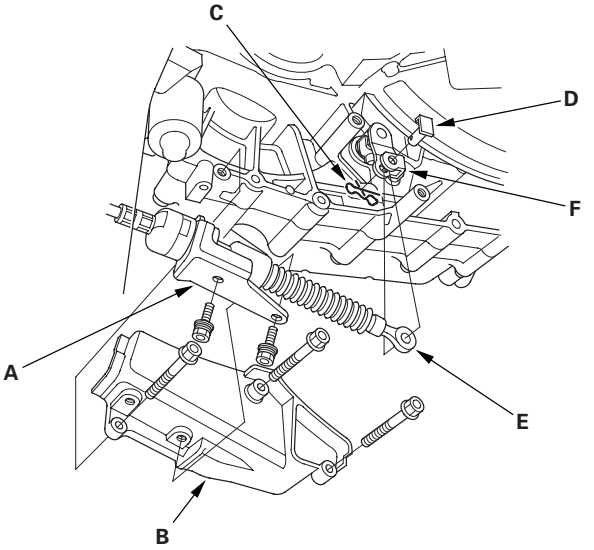

34. Remove the spring clip (C) and control pin (D), then separate the shift cable (E) from the control lever (F) (A/T).

35. Remove the lower hose.

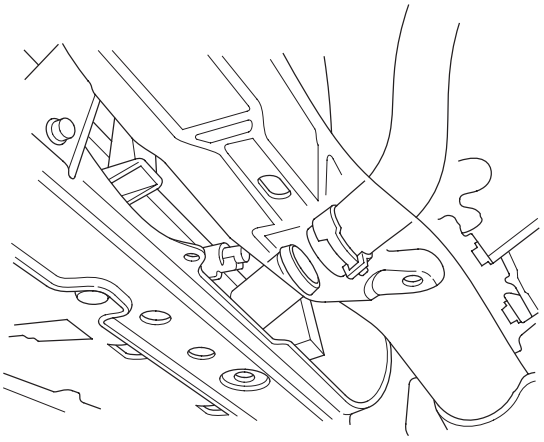

36. Remove the automatic transmission fluid (ATF) filter mounting bolt (A) (A/T).

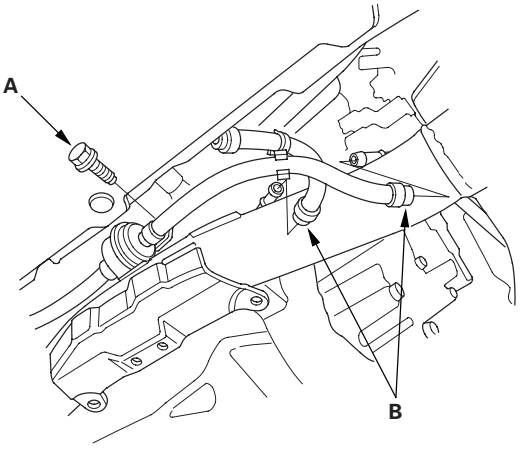

37. Remove the ATF cooler hoses (B), then plug the ATF cooler hoses and lines (A/T).

38. Lower the vehicle on the hoist.

39. Remove the upper hose (A) and heater hoses (B).

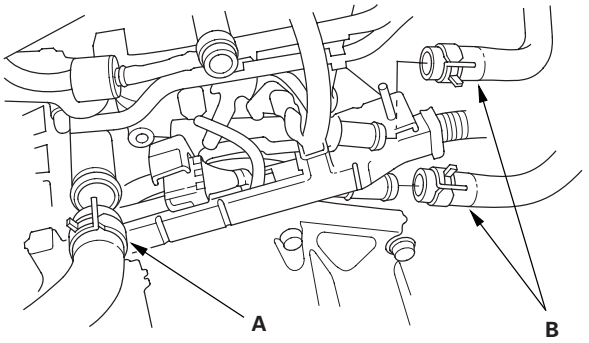

40. Remove the radiator (see page 10-12).

41. Attach the chain hoist to the engine as shown.

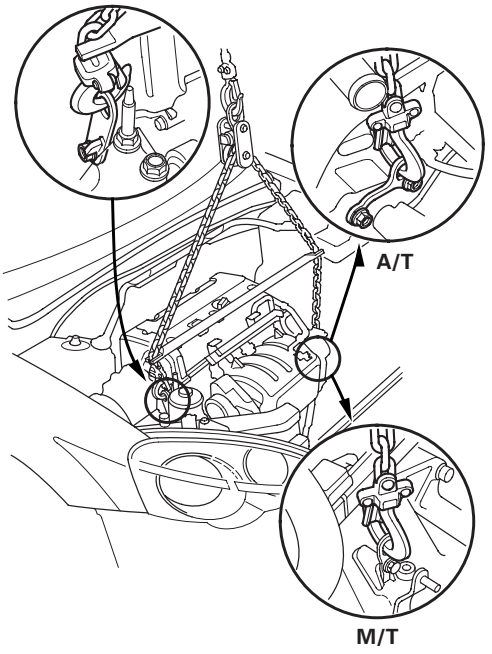

(cont'd)

Engine Removal (cont'd)

42. Remove the transmission mount bracket support bolt/nuts.

M/T
2002-2003 Models:

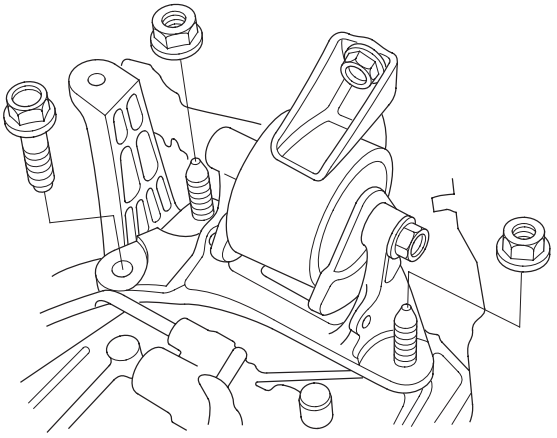

2004-2006 Models:

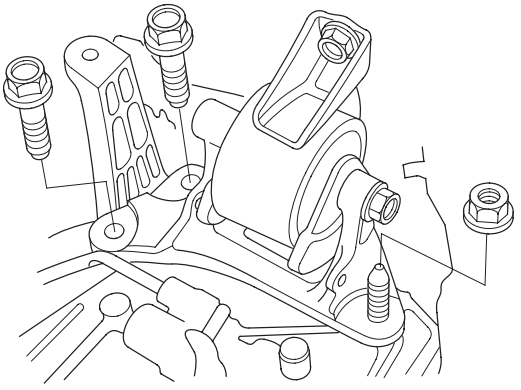

A/T
2002-2003 Models:

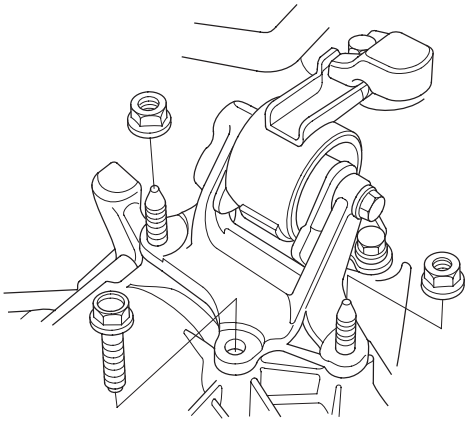

2004-2006 Models:

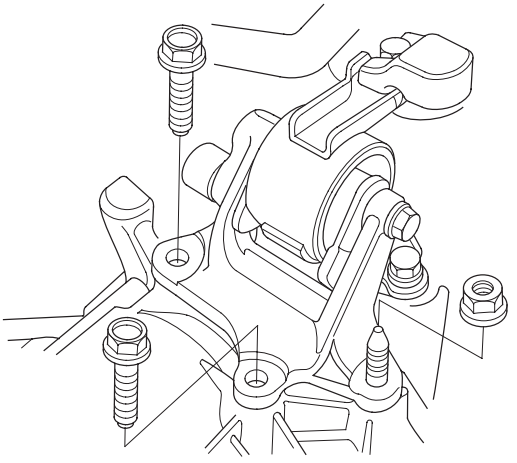

43. Remove the upper bracket mounting bolt and nut.

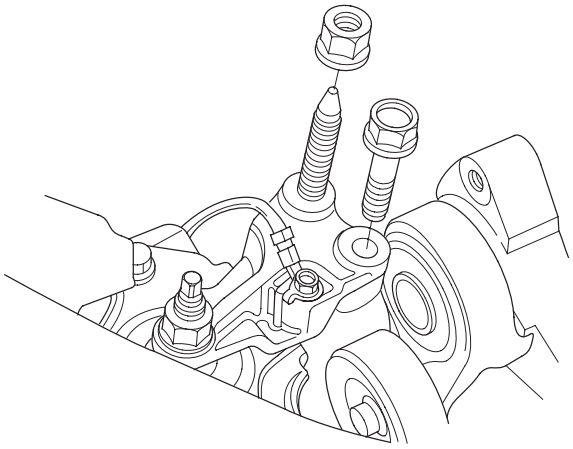

44. Make sure the hoist brackets are positioned properly. Raise the hoist to full height.

45. Remove the rear mount mounting bolts.

Except 2005-2006 TYPE S Models:

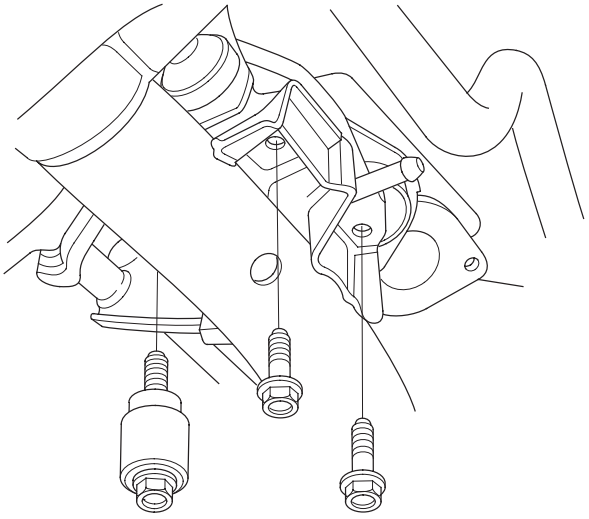

2005-2006 TYPE S Models:

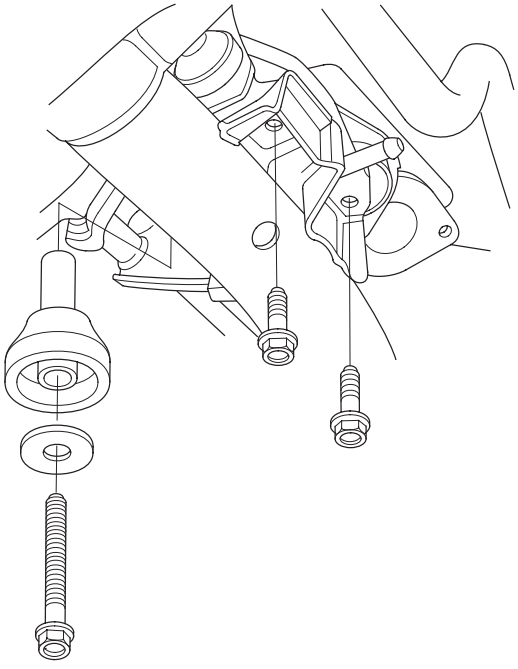

(cont'd)

Engine Removal (cont'd)

46. Remove the front mount bracket mounting bolt.

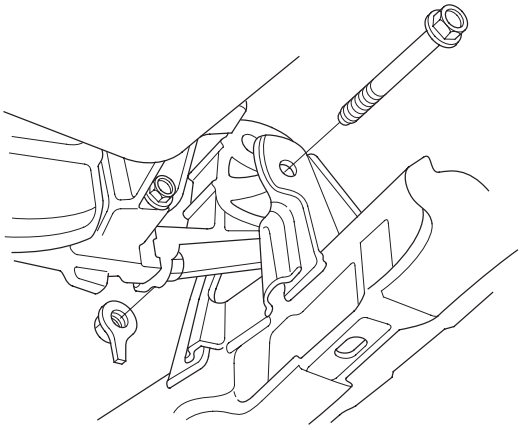

47. Use a marker to make alignment marks on the reference lines (A) that align with the centers of the rear subframe mounting bolts (B).

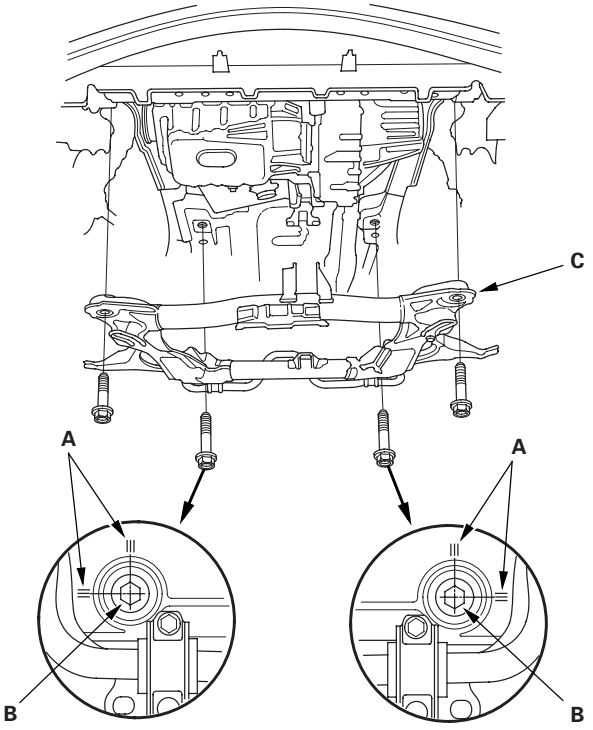

48. Remove the front subframe (C).

49. Disconnect the compressor clutch connector (A), then remove the A/C compressor (B) without disconnecting the A/C hoses.

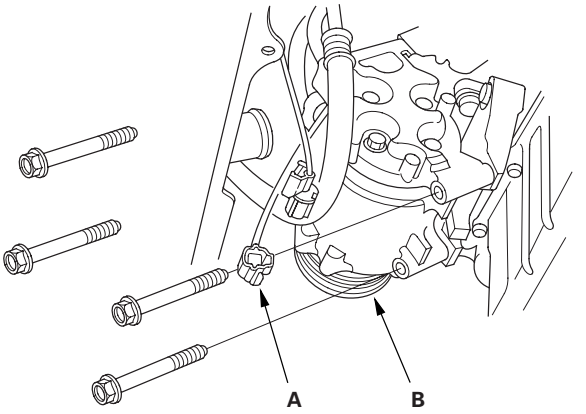

50. Check that the engine/transmission is completely free of vacuum hoses, fuel and coolant hoses, and electrical wiring.

51. Slowly lower the engine about 150 mm (6 in.). Check once again that all hoses and wires are disconnected from the engine/transmission.

52. Lower the engine all the way. Remove the chain hoist from the engine.

53. Remove the engine from under the vehicle.

Engine Installation

1. Install the accessory brackets, and tighten their bolts to the specified torques.

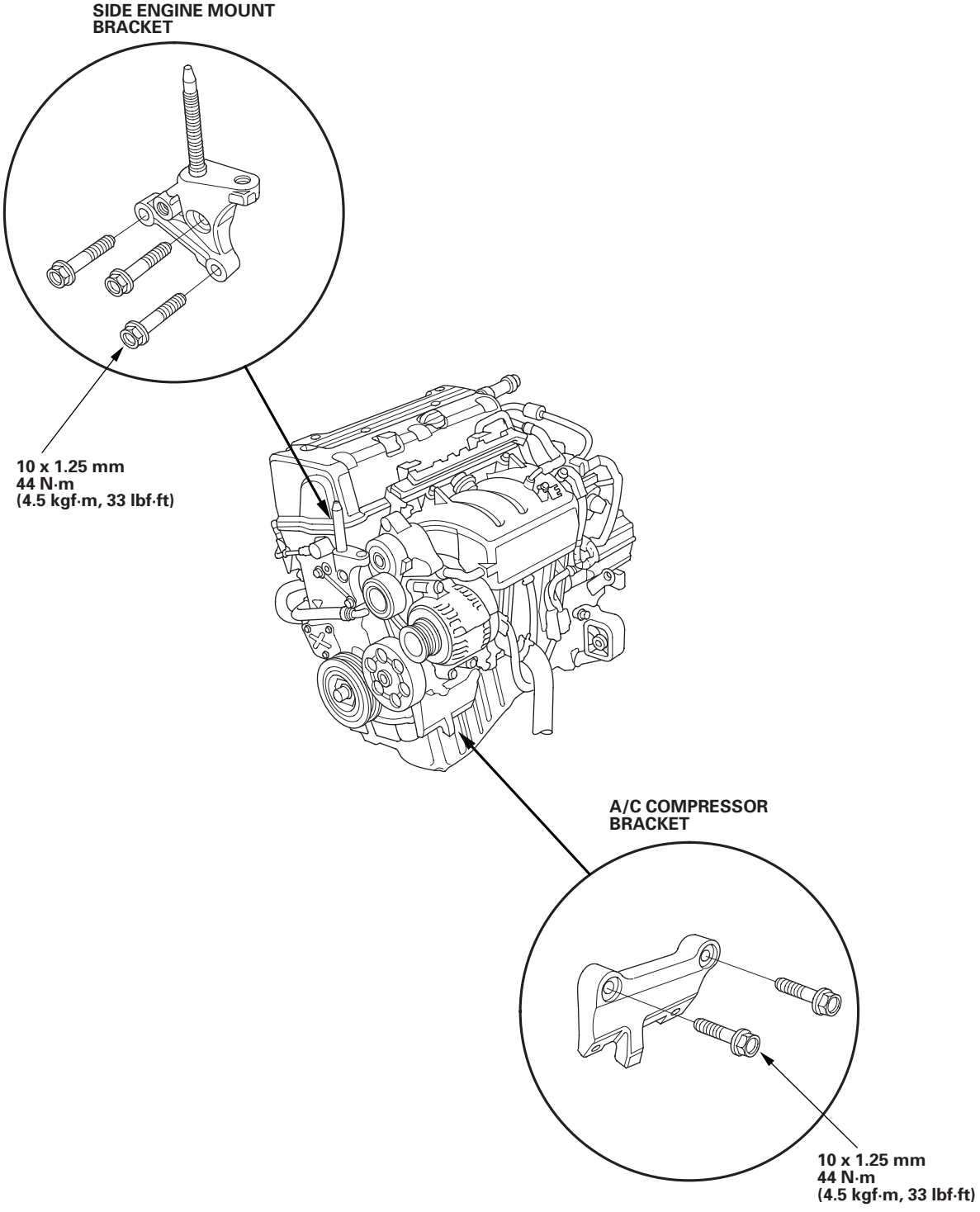

(cont'd)

Engine Installation (cont'd)

2. Position the engine under the vehicle. Attach the chain hoist to the engine, then lift the engine into position in the vehicle.

   NOTE: Reinstall the mounting bolts/support nuts in the sequence given. Failure to follow this sequence may cause excessive noise and vibration, and reduce bushing life.

3. Install the A/C compressor (A), and connect the compressor clutch connector (B).

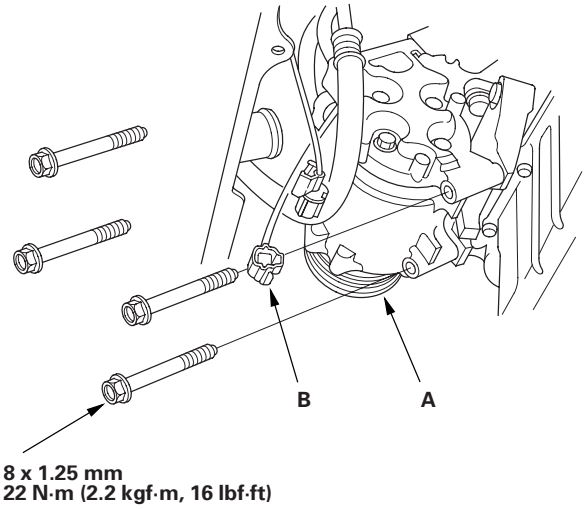

4. Install the subframe (A). Align the reference lines (B) on the subframe with the bolt head center, then tighten the bolts.

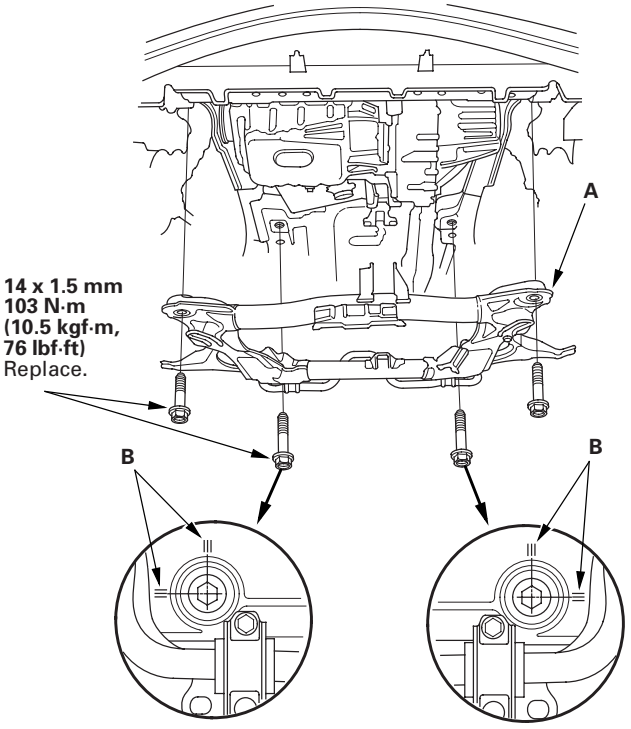

5. Tighten the rear mount mounting bolts.

Except 2005-2006 TYPE S Models:

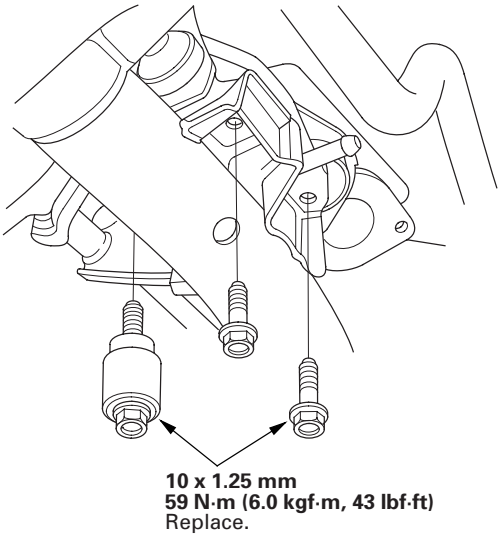

2005-2006 TYPE S Models:

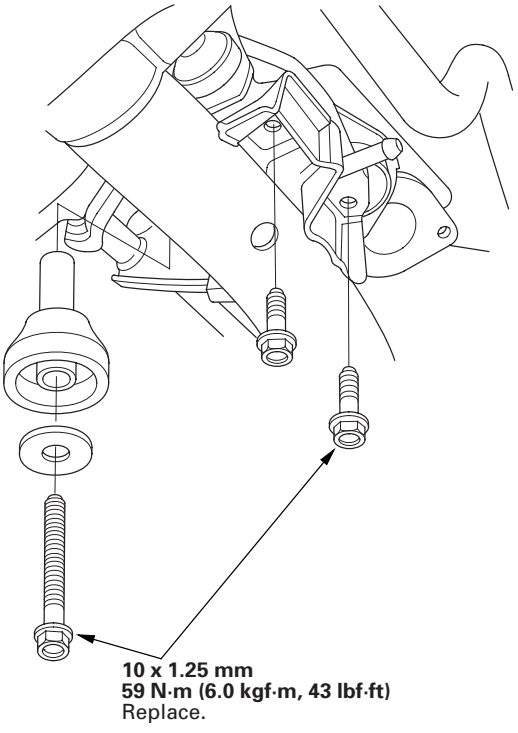

6. Loosely tighten the new front mount bracket mounting bolt.

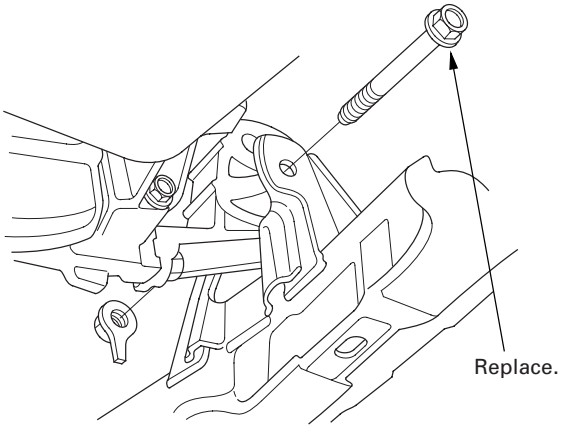

7. Lower the vehicle on the hoist.

8. Tighten the upper bracket mounting bolt and nut.

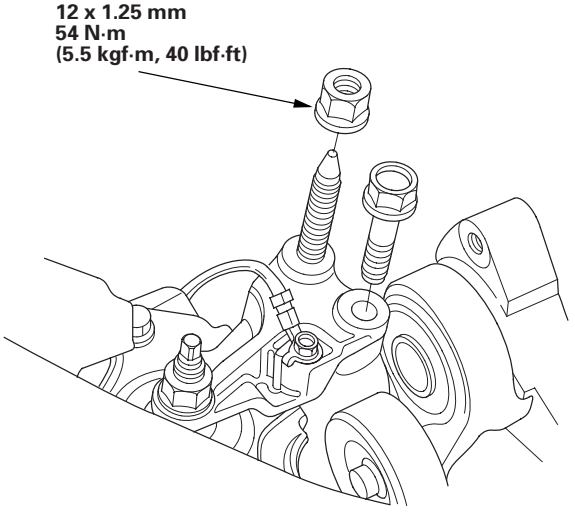

(cont'd)

Engine Installation (cont'd)

9. Tighten the support bolt/nuts.

M/T
2002-2003 Models:

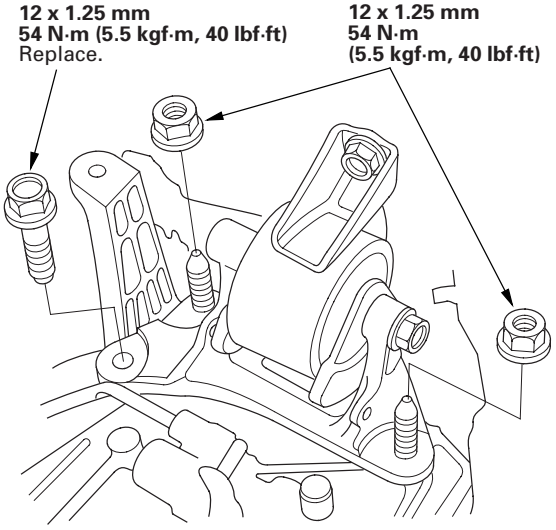

2004-2006 Models:

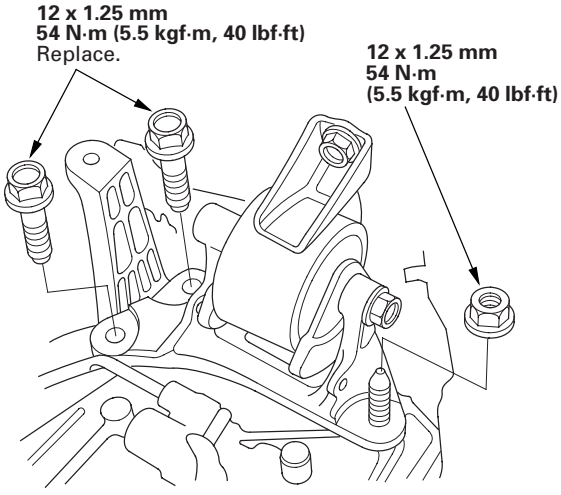

A/T
2002-2003 Models:

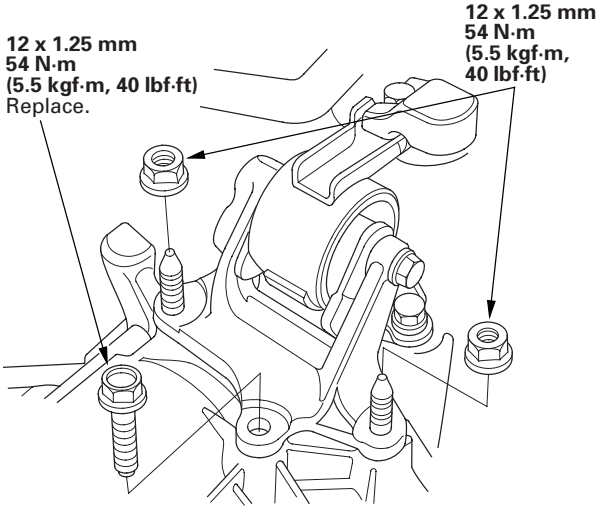

2004-2006 Models:

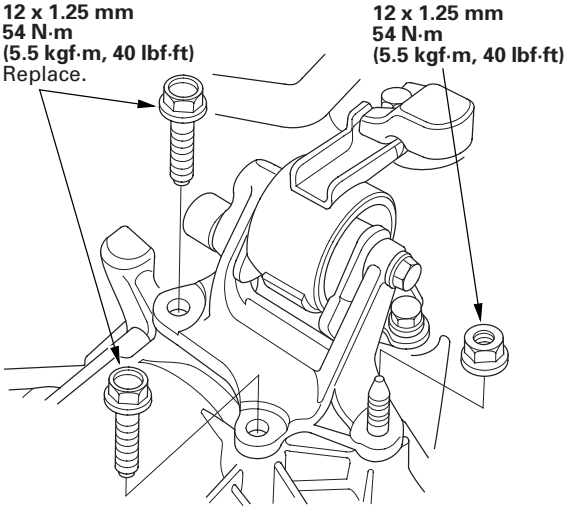

10. Raise the vehicle on the hoist to full height.

11. Loosen the front engine mount bracket mounting bolt, then tighten it to the specified torque.

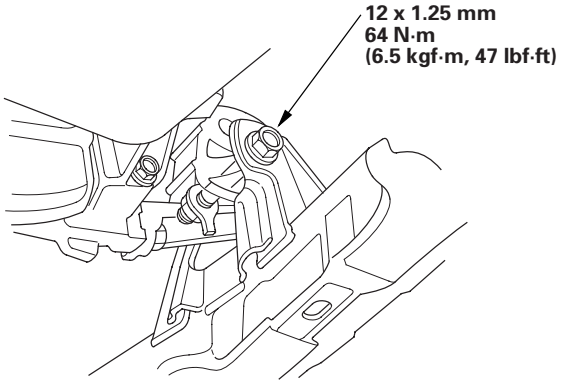

12. Lower the hoist.

13. Remove the chain hoist from the engine.

14. Raise the vehicle on the hoist to full height.

15. Install the shift control cable (A) (A/T).

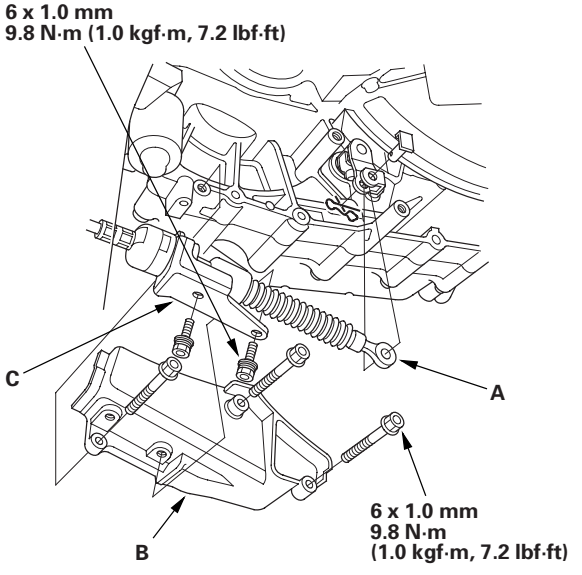

16. Install the shift cable cover (B), then install the shift control cable bracket (C) (A/T).

17. Install a new spring clip on the end of each driveshaft, then install the driveshafts. Make sure each clip ''clicks'' into place in the differential and intermediate shaft.

18. Connect the suspension lower arm ball joints (see step 10 on ppage 18-13) and stabilizer links (see page 18-18).

19. 2002-2004 models: Install the new flexible joint gasket (A).
2005-2006 models: Check the flexible joint gasket (A) for damage. If the flexible joint gasket is damaged, replace the flexible joint gasket (see page 9-16).

NOTE: Do not reuse the flexible joint gasket, when removing it.

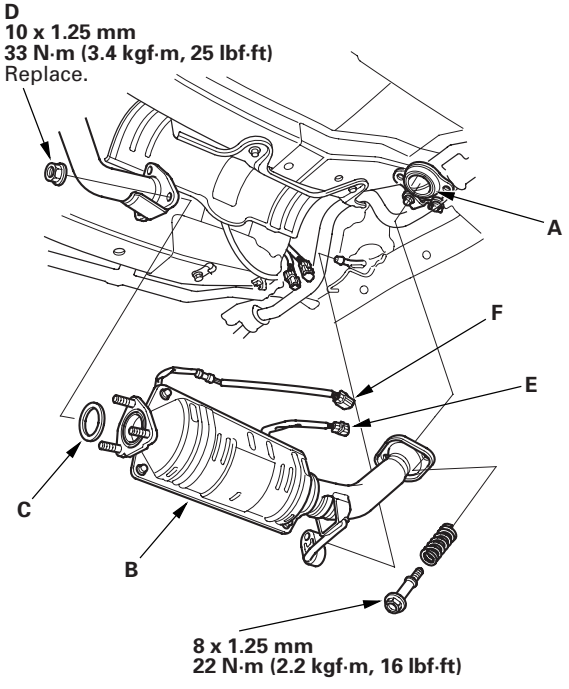

20. Install the three way catalytic converter (TWC) assembly (B); use new gasket (C) and new self locking nuts (D).

21. Connect the air fuel ratio (A/F) sensor connector (E) and secondary heated oxygen sensor (secondary HO2S) connector (F).

22. Install the radiator (see page 10-12).

(cont'd)

Engine Installation (cont'd)

23. Install the lower radiator hose.

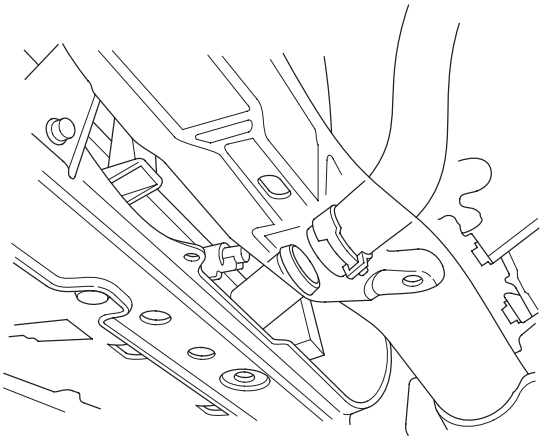

24. Tighten the automatic transmission fluid (ATF) filter mounting bolt (A), and install the ATF cooler hoses (B) (A/T).

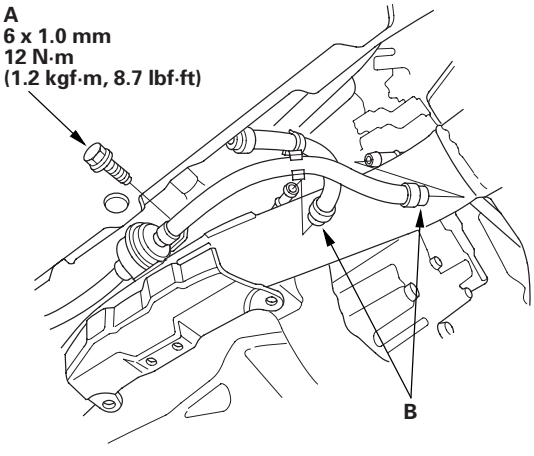

25. Install the splash shield.

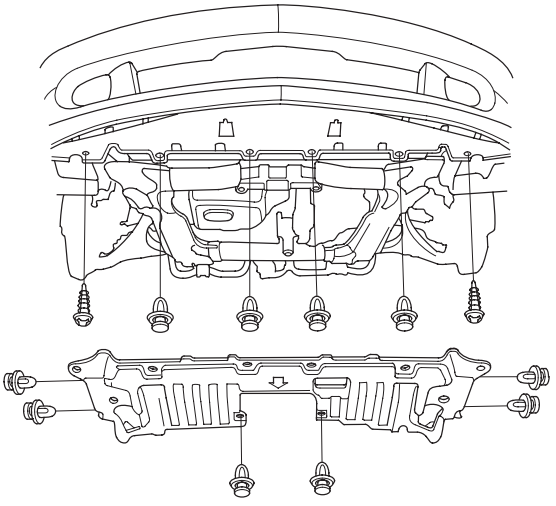

26. Lower the vehicle on the hoist.

27. Install the upper radiator hose (A) and heater hoses (B).

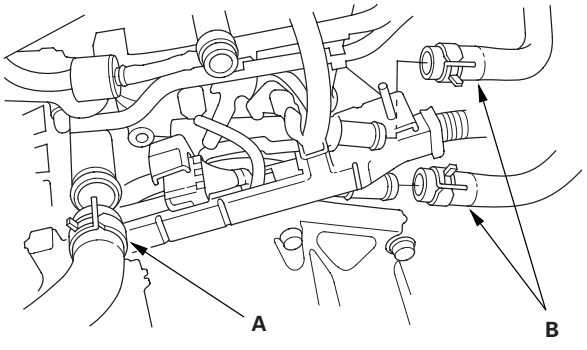

28. Install the P/S pump.

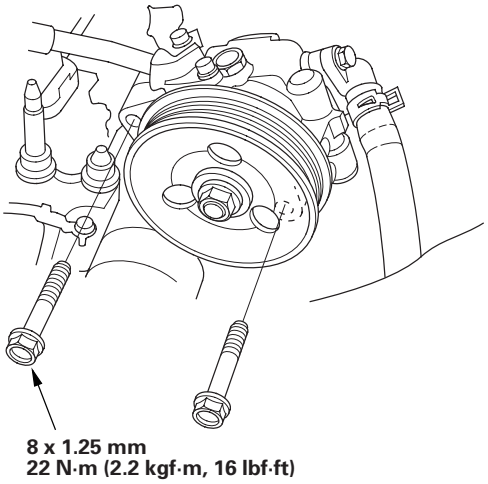

29. Install the bolt securing the power steering (P/S) hose bracket.

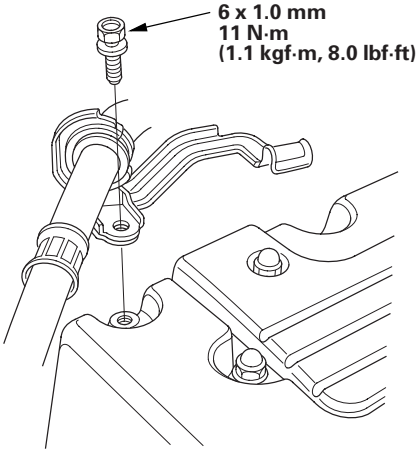

30. Install the drive belt (see page 4-43).

31. Push the engine control module (ECM)/powertrain control module (PCM) connectors through the bulkhead, then install the grommet (A).

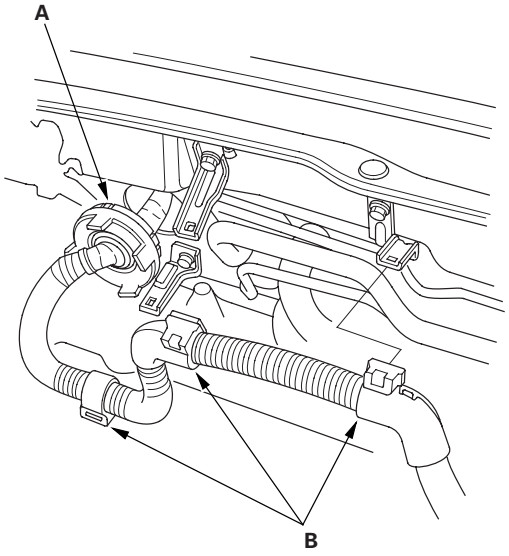

32. Install the harness clamps (B).

33. Connect the ECM/PCM connectors (A) and main wire harness connector (B).

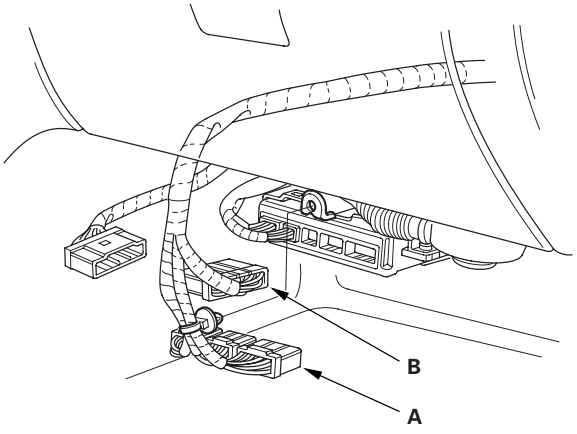

34. Install the throttle cable (see page 11-409), then adjust the cable (see page 11-408).

35. Install the cruise control actuator cable, then adjust the cable (see page 4-69).

(cont'd)

Engine Installation (cont'd)

36. Install the brake booster vacuum hose (A) and the evaporative emission (EVAP) canister hose (B).

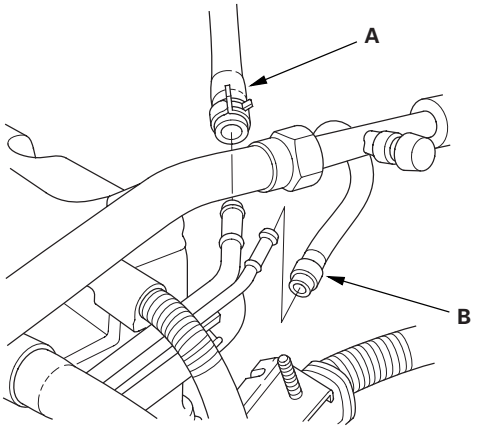

37. Install the fuel feed line (see page 11-370).

38. Install the select cable (A) and shift cable (B) using the plastic washers (C), washers (D), and new cotter pins (E) (M/T).

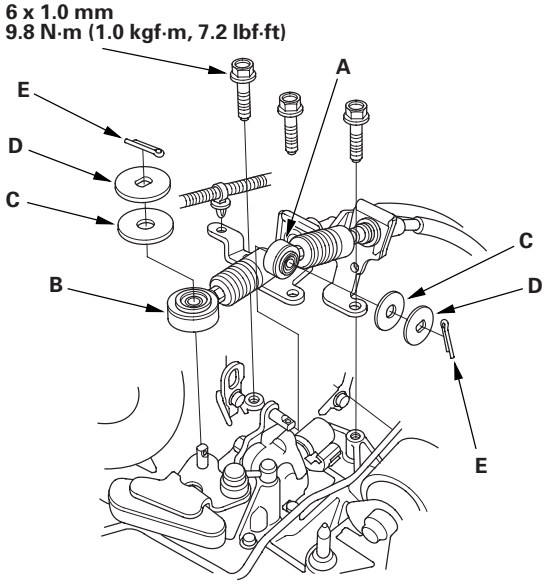

39. Install the clutch slave cylinder (A) and clutch line bracket mounting bolt (B) (M/T).

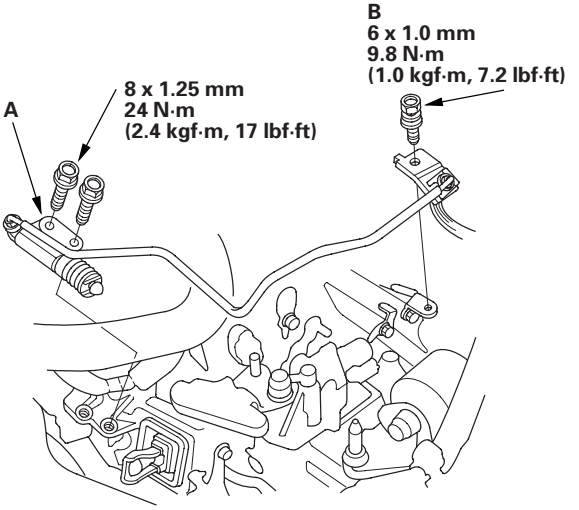

40. Install the battery cable (A) on the under-hood fuse/relay box, then install the harness clamps (B).

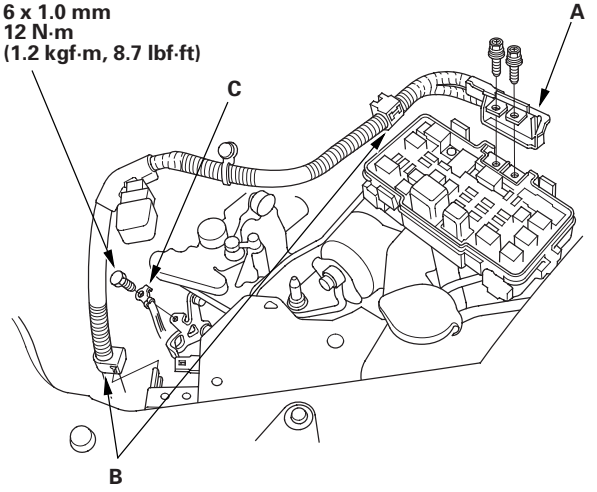

41. Install the ground cable (C).

42. Install the air intake duct.

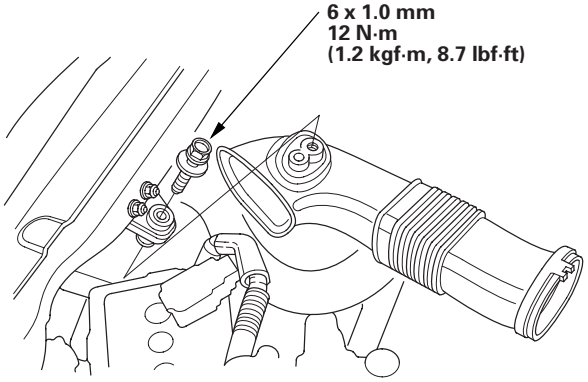

43. Install the air cleaner housing (A) and connect the intake air temperature (IAT) sensor connector (B).

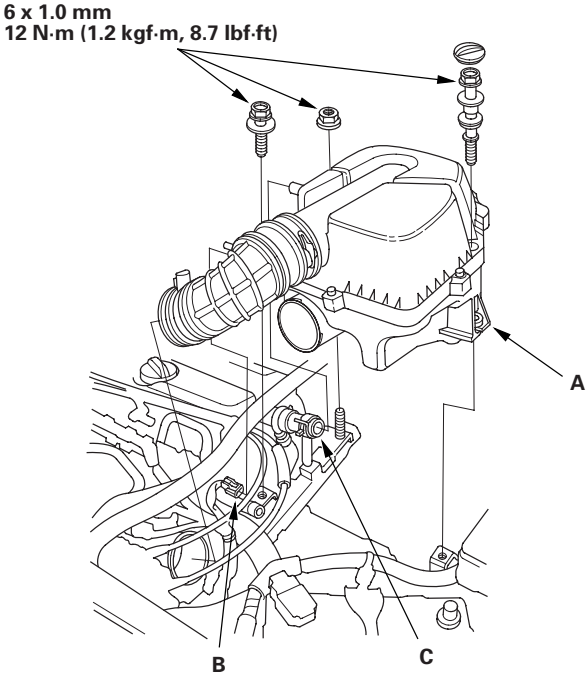

44. Install the breather hose (C).

45. Install the intake manifold cover.

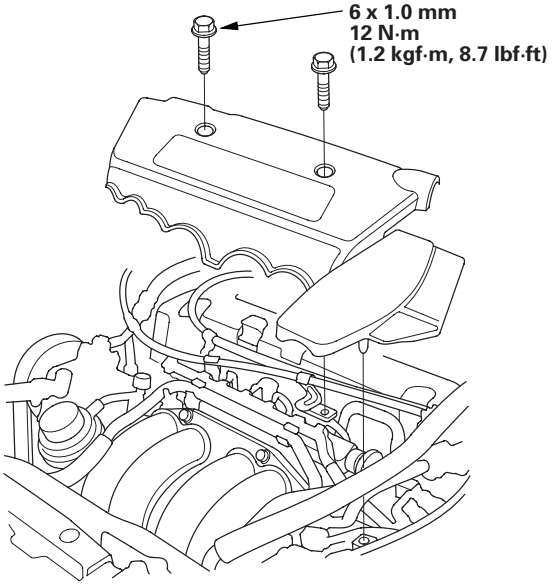

46. Install the battery. Clean the battery posts and cable terminals with sandpaper, then assemble them and apply grease to prevent corrosion.

47. Move the shift lever to each gear, and verify that the A/T gear position indicator follows the transmission range switch (A/T).

48. Check that the transmission shifts into gear smoothly (M/T).

49. Inspect for fuel leaks. Turn the ignition switch ON (II) (do not operate the starter) so the fuel pump runs for about 2 seconds and pressurizes the fuel line. Repeat this operation two or three times, then check for fuel leakage at any point in the fuel line.

50. Refill the engine with engine oil (see step 3 on page 8-8).

51. Refill the transmission with fluid:

    - Manual transmission (see page 13-4).
    - Automatic transmission (see page 14-272).

52. Refill the radiator with engine coolant, and bleed air from the cooling system with the heater valve open (see step 7 on page 10-7).

(cont'd)

Engine Installation (cont'd)

53. Do the ECM/PCM idle learn procedure (see page 11-349).

54. 2005-2006 models: Do the crankshaft position (CKP) pattern clear/CKP pattern learn procedure (see page 11-5).

55. Inspect the idle speed (see page 11-348).

56. Inspect the ignition timing (see page 4-25).

57. Check the wheel alignment (see page 18-4).

58. Enter the anti-theft code for the radio, then enter the customer's audio presets.

59. Do the power window control unit reset procedure (see page 22-148).

60. Set the clock.

Engine Mechanical

Cylinder Head

Special Tools 6-2
Component Location Index 6-3
Engine Compression Inspection 6-6
VTEC Rocker Arm Test 6-7
VTC Actuator Inspection 6-10
Valve Clearance Adjustment 6-11
Crankshaft Pulley Removal and Installation 6-13
Cam Chain Removal 6-14
Cam Chain Installation 6-17
Auto-Tensioner Removal/Installation 6-22
Chain Case Oil Seal Installation 6-24
Cam Chain Inspection 6-25
CKP Pulse Plate Replacement 6-27
Cylinder Head Cover Removal 6-28
Cylinder Head Cover Installation 6-29
Cylinder Head Removal 6-31
CMP Pulse Plate A Replacement 6-32
CMP Pulse Plate B Replacement 6-33
VTC Actuator, Exhaust Camshaft Sprocket
Removal and Installation 6-33
Cylinder Head Inspection for Warpage 6-34
Rocker Arm Assembly Removal 6-35
Rocker Arm and Shaft
Disassembly/Reassembly 6-36
Rocker Arm and Shaft Inspection 6-39
Camshaft Inspection 6-40
Valve, Spring, and Valve Seal Removal 6-43
Valve Inspection 6-44
Valve Stem-to-Guide Clearance Inspection 6-44
Valve Guide Replacement 6-45
Valve Seat Reconditioning 6-47
Valve, Spring, and Valve Seal Installation 6-49
Rocker Arm Assembly Installation 6-50
Cylinder Head Installation 6-51

Special Tools

Ref. No.	Tool Number	Description	Qty
①	07AAJ-PNAA100	Air Pressure Regulator	1
②	07HAH-PJ7A100	Valve Guide Reamer, 5.5 mm	1
③	07JAA-001020A	Socket, 19 mm	1
④	07JAB-001020A	Holder Handle	1
⑤	07MAA-PR70100	Tappet Adjust Wrench Set	1
⑥	07NAB-001040A	Holder Attachment, 50 mm	1
⑦	07PAD-0010000	Stem Seal Driver	1
⑧	07ZAJ-PNAA100	VTEC Air Adapter	2
⑨	07ZAJ-PNAA200	VTEC Air Stopper	1
⑩	07ZAJ-PNAA300	Air Joint Adapter	1
⑪	07742-0010100	Valve Guide Driver, 5.5 mm	1
⑫	07746-0010400	Attachment, 52 x 55 mm	1
⑬	07749-0010000	Driver	1
⑭	07757-PJ1010A	Valve Spring Compressor Attachment	1

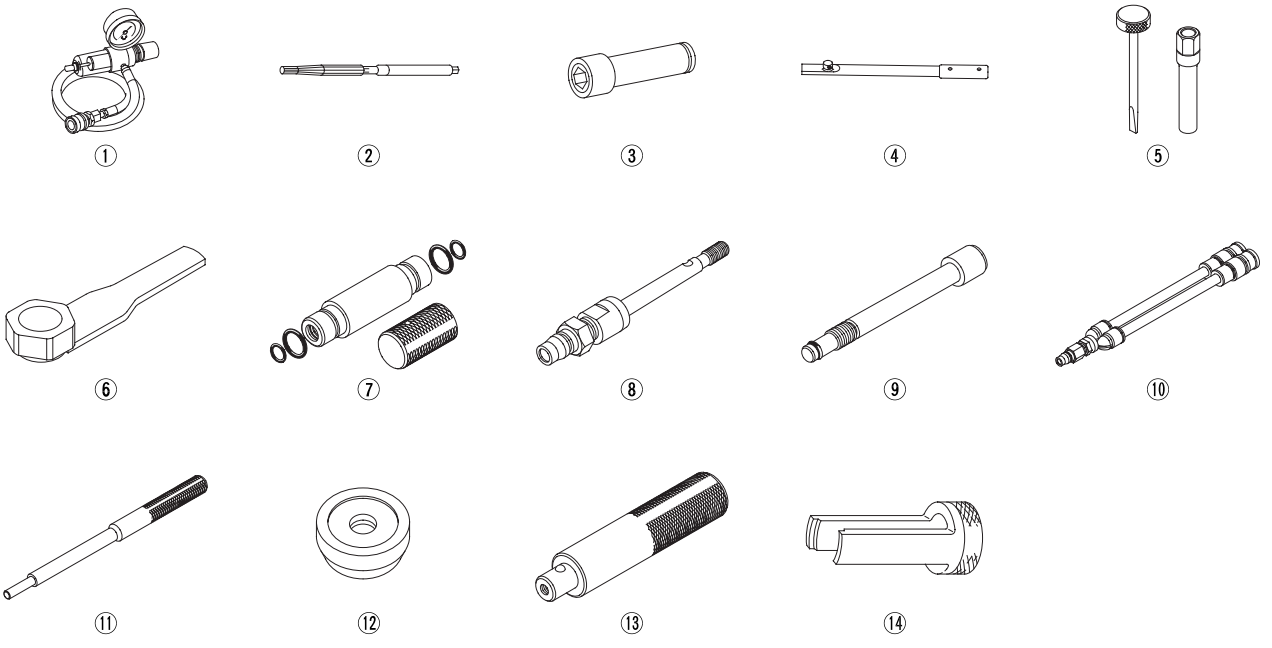

Component Location Index

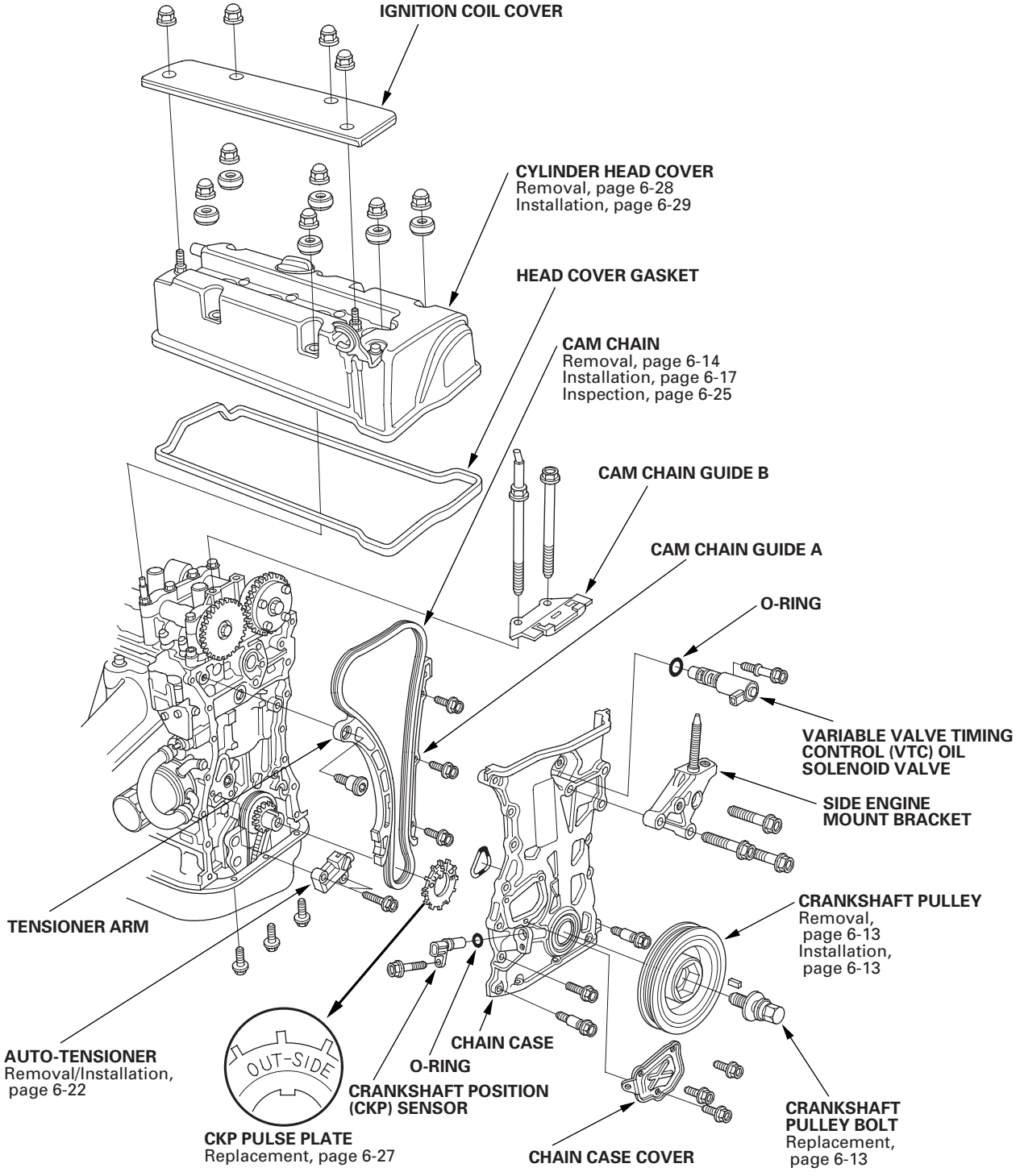

(cont'd)

Component Location Index (cont'd)

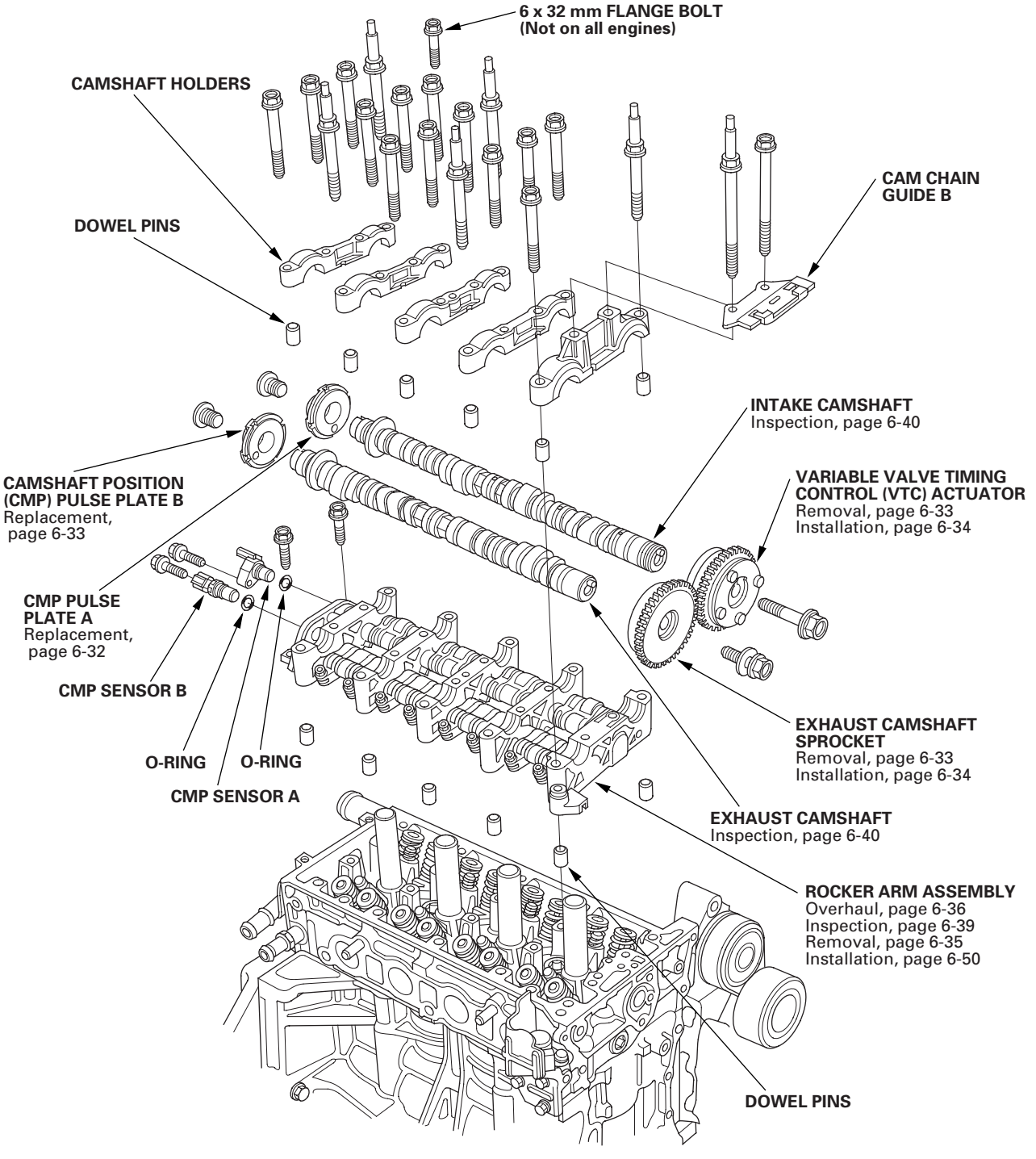

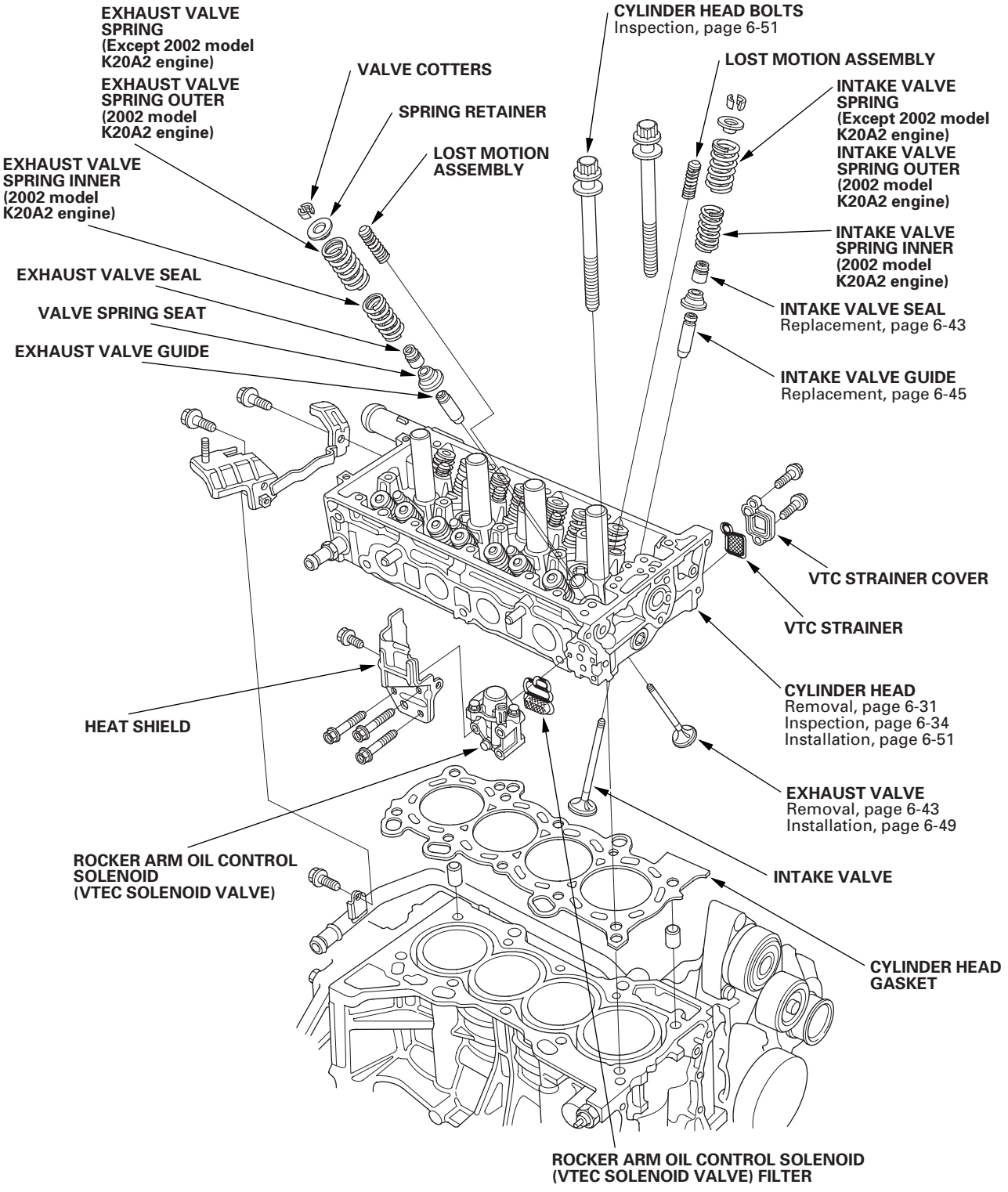
EXHAUST VALVE SPRING (Except 2002 model K20A2 engine)
EXHAUST VALVE SPRING OUTER (2002 model K20A2 engine)
EXHAUST VALVE SPRING INNER (2002 model K20A2 engine)
EXHAUST VALVE SEAL
VALVE SPRING SEAT
EXHAUST VALVE GUIDE
VALVE COTTERS
SPRING RETAINER
LOST MOTION ASSEMBLY
CYLINDER HEAD BOLTS
Inspection, page 6-51
LOST MOTION ASSEMBLY
INTAKE VALVE SPRING (Except 2002 model K20A2 engine)
INTAKE VALVE SPRING OUTER (2002 model K20A2 engine)
INTAKE VALVE SPRING INNER (2002 model K20A2 engine)
INTAKE VALVE SEAL
Replacement, page 6-43
INTAKE VALVE GUIDE
Replacement, page 6-45
VTC STRAINER COVER
VTC STRAINER
CYLINDER HEAD
Removal, page 6-31
Inspection, page 6-34
Installation, page 6-51
HEAT SHIELD
EXHAUST VALVE
Removal, page 6-43
Installation, page 6-49
ROCKER ARM OIL CONTROL SOLENOID (VTEC SOLENOID VALVE)
INTAKE VALVE
CYLINDER HEAD GASKET
ROCKER ARM OIL CONTROL SOLENOID (VTEC SOLENOID VALVE) FILTER

Engine Compression Inspection

NOTE: On the 2005-2006 models: After this inspection, you must reset the engine control module (ECM)/ powertrain control module (PCM), otherwise ECM/PCM will continue to stop the injectors from functioning. Select ECM/PCM reset using the Honda Diagnostic System (HDS) (see page 11-4).

1. Warm up the engine to normal operating temperature (cooling fan comes on).

2. Turn the ignition switch OFF.

3. 2002-2004 models: Remove the No. 17 (15 A) fuse from the under-dash fuse/relay box.
   2005-2006 models: Connect the HDS to the data link connector (DLC) (see step 2 on page 11-3). Turn the ignition switch ON (II), then select PGM-FI, INSPECTION, then All INJECTORS OFF function on the HDS.

4. Remove the four ignition coils (see page 4-26).

5. Remove the four spark plugs.

6. Attach the compression gauge to the spark plug hole.

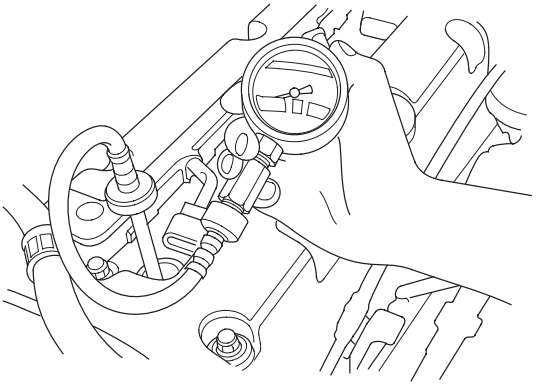

7. Open the throttle fully, then crank the engine with the starter motor and measure the compression.

   Compression Pressure:
   Above 930 kPa (9.5 kgf/cm^2, 135 psi)

8. Measure the compression on the remaining cylinders.

   Maximum Variation:
   Within 200 kPa (2.0 kgf/cm^2, 28 psi)

9. If the compression is not within specifications, check the following items, then remeasure the compression.

   - Damaged or worn valves and seats
   - Damaged cylinder head gasket
   - Damaged or worn piston rings
   - Damaged or worn piston and cylinder bore

10. Remove the compression gauge from the spark plug hole.

11. Install the four spark plugs.

12. Install the four ignition coils (see page 4-26).

13. 2002-2004 models: Install the No. 17 (15 A) fuse from the under-dash fuse/relay box.
    2005-2006 models: Select ECM/PCM reset (see page 11-4) to stop the ALL INJECTORS OFF function on the HDS.

VTEC Rocker Arm Test

Special Tools Required
- Air pressure regulator 07AAJ-PNAA100
- VTEC air adapter 07ZAJ-PNAA100
- VTEC air stopper 07ZAJ-PNAA200
- Air joint adapter 07ZAJ-PNAA300

K20A3 Engine

1. Start the engine and let it run for 5 minutes, then turn the ignition switch OFF.

2. Remove the cylinder head cover (see page 6-28).

3. Set the No. 1 piston at top dead center (TDC) (see step 1 on page 6-14).

4. Verify that the intake primary rocker arm (A) moves independently of the intake secondary rocker arm (B).

   - If the intake primary rocker arm does not move, remove the primary and secondary rocker arms as an assembly, and check that the pistons in the secondary and primary rocker arms move smoothly. If any rocker arm needs replacing, replace the primary and secondary rocker arms as an assembly, and test.
   - If the intake primary rocker arm moves freely, go to step 4.

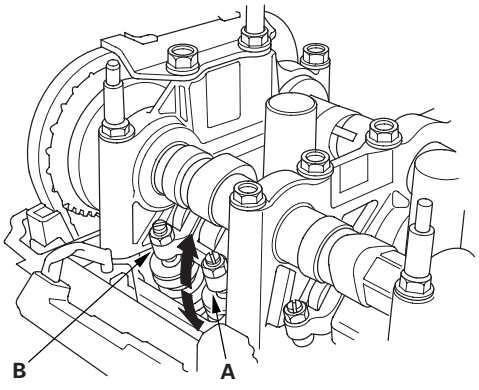

5. Repeat step 3 on the remaining intake primary rocker arms with each piston at TDC. When all the primary rocker arms pass the test, go to step 5.

6. Check that the air pressure on the shop air compressor gauge indicates over 400 kPa (4.0 kgf/cm^2, 57 psi).

7. Inspect the valve clearance (see page 6-11).

8. Remove the sealing bolt (A) from the relief hole, and install the VTEC air stopper (B).

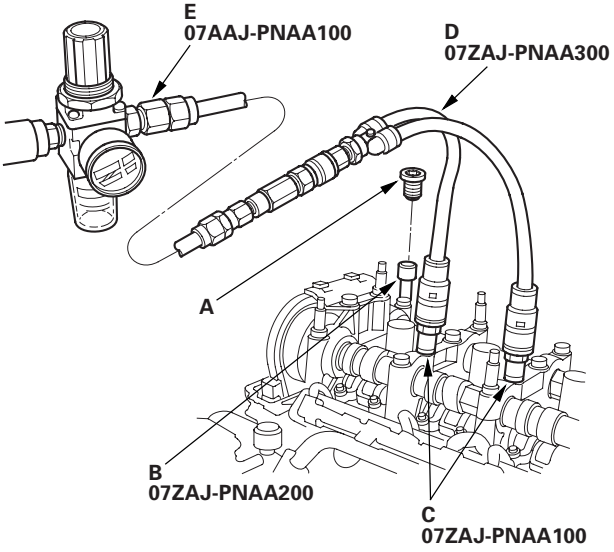

9. Remove the No. 2 and No. 3 camshaft holder bolts, and install the VTEC air adapters (C) finger-tight.

10. Connect the air joint adapter (D), and air pressure regulator (E).

(cont'd)

VTEC Rocker Arm Test (cont'd)

11. Loosen the valve on the regulator, and apply the specified air pressure.

    Specified Air Pressure:
    290 kPa (3.0 kgf/cm^2, 42 psi)

    NOTE: If the synchronizing piston does not move after applying air pressure; move the primary or secondary rocker arm up and down manually by rotating the crankshaft clockwise.

12. With the specified air pressure applied, move the intake primary rocker arm (A) for the No. 1 cylinder. The primary rocker arm and secondary rocker arm (B) should move together.

    - If the intake secondary rocker arm does not move, remove the primary and secondary rocker arms as an assembly, and check that the pistons in the primary and secondary rocker arms move smoothly. If any rocker arm needs replacing, replace the primary and secondary rocker arms as an assembly, and test.

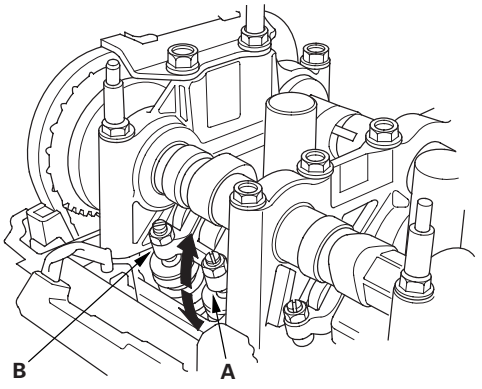

13. Remove the special tools.

14. Tighten the camshaft holder mounting bolts to 22 N·m (2.2 kgf·m, 16 lbf·ft).

15. Tighten the sealing bolt to 20 N·m (2.0 kgf·m, 14 lbf·ft).

16. Install the cylinder head cover (see page 6-29).

K20A2, K20Z1 Engines

1. Start the engine and let it run for 5 minutes, then turn the ignition switch OFF.

2. Remove the cylinder head cover (see page 6-28).

3. Set the No. 1 piston at TDC (see step 1 on page 6-14).

4. Move the secondary rocker arm (A) for No. 1 cylinder. The secondary rocker arm should move independently of the mid rocker arm (B).

   - If the secondary rocker arm does not move, remove the mid, primary, and secondary rocker arms as an assembly, and check that the pistons in the rocker arms move smoothly. If any rocker arm needs replacing, replace the mid, primary, and secondary rocker arms as an assembly, and test.
   - If the secondary rocker arm moves freely, go to step 4.

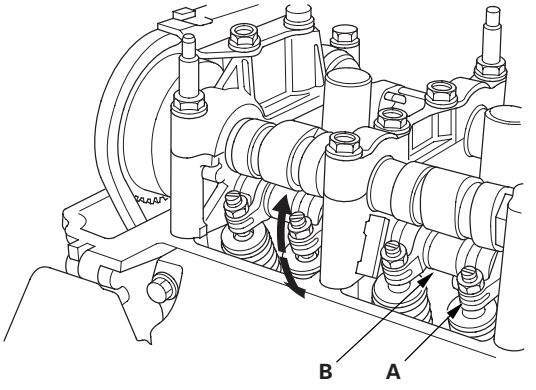

5. Repeat step 3 on the remaining secondary rocker arms with each piston at TDC. When all the secondary rocker arms pass the test, go to step 5.

6. Check that the air pressure on the shop air compressor gauge indicates over 400 kPa (4.0 kgf/cm^2, 57 psi).

7. Inspect the valve clearance (see page 6-11).

8. Remove the sealing bolt (A) from the relief hole, and install the VTEC air stopper (B).

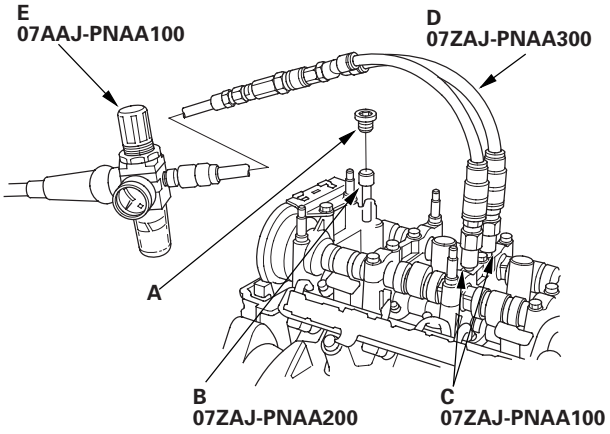

9. Remove the No. 3 camshaft holder bolts, and install the VTEC air adapters (C) finger-tight.

10. Connect the air joint adapter (D), and air pressure regulator (E).

11. Loosen the valve on the regulator, and apply the specified air pressure.

    Specified Air Pressure:
    290 kPa (3.0 kgf/cm^2, 42 psi)

    NOTE: If the synchronizing piston does not move after applying air pressure; move the rocker arm up and down manually by rotating the crankshaft.

12. With the specified air pressure applied, move the secondary rocker arm (A) for the No. 1 cylinder. The mid rocker arm (B), primary rocker arm (C), and secondary rocker arm should move together.

    - If the mid and primary rocker arms do not move together with the secondary rocker arm, remove the mid, primary, and secondary rocker arms as an assembly, and check that the pistons in the rocker arms move smoothly. If any rocker arm needs replacing, replace the mid, primary, and secondary rocker arms as an assembly, and retest.

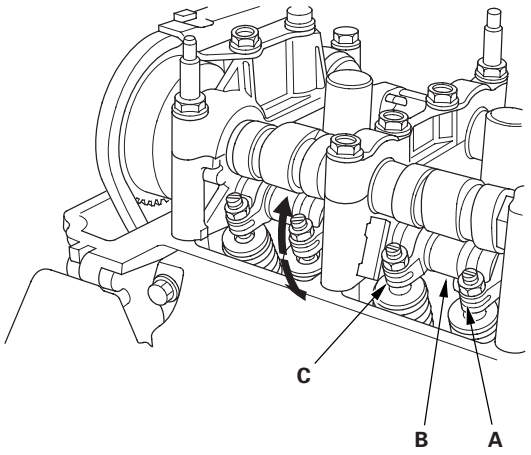

13. Remove the special tools.

14. Tighten the camshaft holder mounting bolts to 22 N·m (2.2 kgf·m, 16 lbf·ft).

15. Tighten the sealing bolt to 20 N·m (2.0 kgf·m, 14 lbf·ft).

16. Install the cylinder head cover (see page 6-29).

VTC Actuator Inspection

1. Remove the cam chain (see page 6-14).
2. Loosen the rocker arm adjusting screws (see step 2 on page 6-35).
3. Remove the camshaft holder (see step 3 on page 6-35).
4. Remove the intake camshaft.
5. Check that the variable valve timing control (VTC) actuator is locked by turning the VTC actuator clockwise and counterclockwise. If the VTC actuator is not locked, replace the VTC actuator.
6. Seal the advance holes (A) and retard holes (B) in the No. 1 camshaft journal with the tape.

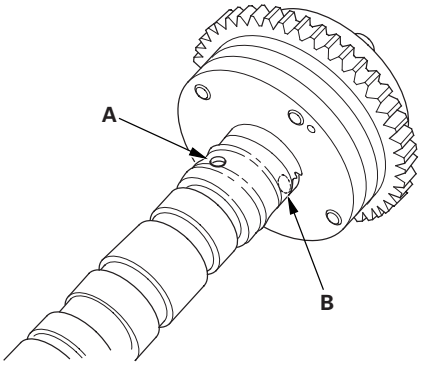

7. Punch a hole in the tape over one of the advance holes.
8. Apply air to the advance hole to release the lock.

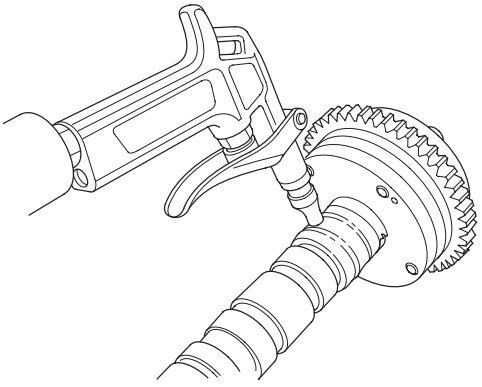

9. Check that the VTC actuator moves smoothly. If the VTC actuator does not move smoothly, replace the VTC actuator.

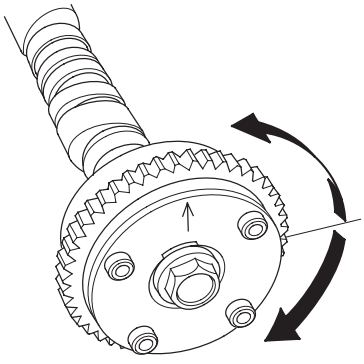

10. Make sure the punch marks on the VTC actuator and exhaust camshaft sprocket are facing up, then set the camshafts in the rocker shaft holder (see step 6 on page 6-50).
11. Set the camshaft holders and chain guide B in place (see step 7 on page 6-50).
12. Tighten the camshaft holder bolts to the specified torque (see step 8 on page 6-50).
13. Check that the variable valve timing control (VTC) actuator is locked by turning the VTC actuator counterclockwise. If not locked, turn the VTC actuator clockwise until it stops, then recheck it. If it is still not locked, replace the VTC actuator.
14. Install the cam chain (see page 6-17).
15. Adjust the valve clearance (see page 6-11).

Valve Clearance Adjustment

Special Tools Required
• Tappet adjust wrench set 07MAA-PR70100

NOTE: Adjust the valves only when the cylinder head temperature is less than 100 °F (38 °C).

1. Remove the cylinder head cover (see page 6-28).

2. Set the No. 1 piston at TDC. The punch mark (A) marked with an arrow on the variable valve timing control (VTC) actuator and the punch mark (B) on the exhaust camshaft sprocket should be at the top. Align the TDC marks (C) on the VTC actuator and exhaust camshaft sprocket.

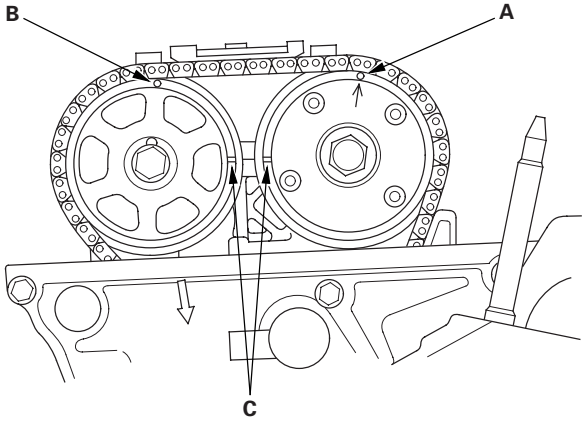

3. Select the correct thickness feeler gauge for the valves you're going to check.

   Valve Clearance
   K20A3 Engine:
   Intake: 0.21—0.25 mm (0.008—0.010 in.)
   Exhaust: 0.28—0.32 mm (0.011—0.013 in.)
   K20A2, K20Z1 Engines:
   Intake: 0.21—0.25 mm (0.008—0.010 in.)
   Exhaust: 0.25—0.29 mm (0.010—0.011 in.)

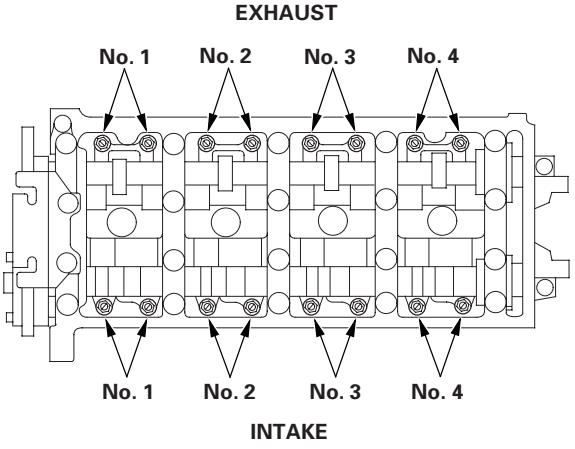

4. Insert the feeler gauge (A) between the adjusting screw (B) and the end of the valve stem, and slide it back and forth; you should feel a slight amount of drag.

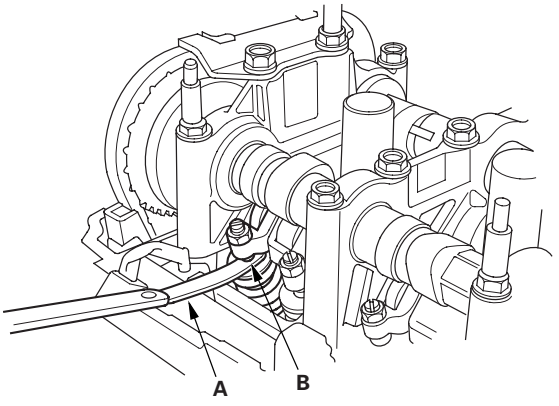

(cont'd)

Valve Clearance Adjustment (cont'd)

5. If you feel too much or too little drag, loosen the locknut with the special tools, and turn the adjusting screw until the drag on the feeler gauge is correct.

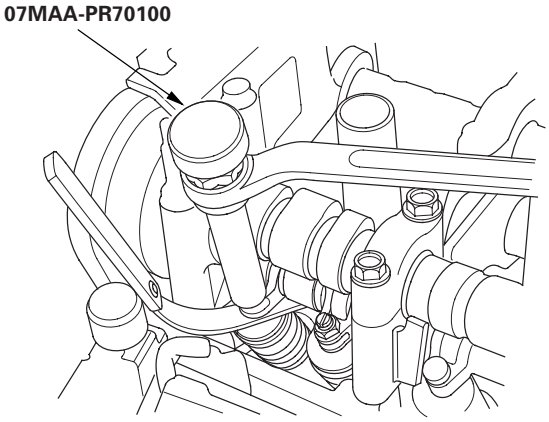

6. Tighten the locknut to the specified torque.

   Specified Torque
   K20A3 Engine:
   Intake: 20 N·m (2.0 kgf·m, 14 lbf·ft)
   Apply engine oil to the nut threads.
   Exhaust: 14 N·m (1.4 kgf·m, 10 lbf·ft)
   K20A2, K20Z1 Engines: 20 N·m (2.0 kgf·m, 14 lbf·ft)
   Apply engine oil to the nut threads.

7. Recheck the valve clearance. Repeat the adjustment if necessary.

8. Rotate the crankshaft 180 ° clockwise (camshaft pulley turns 90 °).

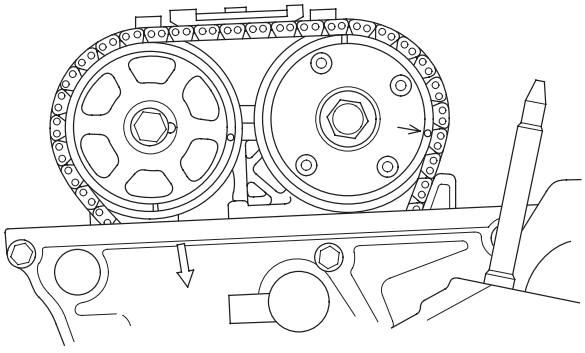

9. Check and, if necessary, adjust the valve clearance on No. 3 cylinder.

10. Rotate the crankshaft 180 ° clockwise (camshaft pulley turns 90 °).

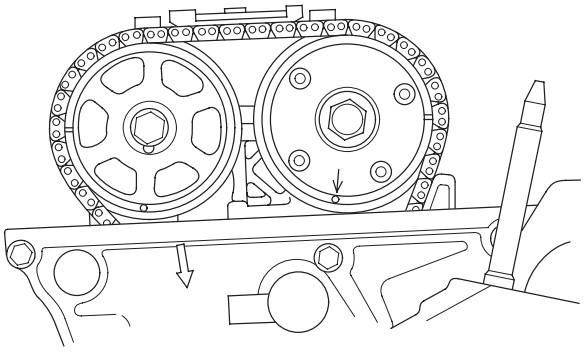

11. Check and, if necessary, adjust the valve clearance on No. 4 cylinder.

12. Rotate the crankshaft 180 ° clockwise (camshaft pulley turns 90 °).

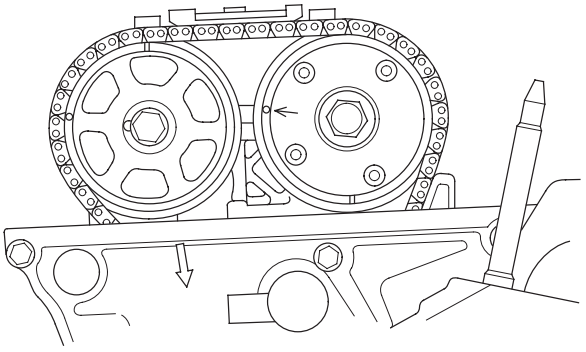

13. Check and, if necessary, adjust the valve clearance on No. 2 cylinder.

14. Install the cylinder head cover (see page 6-29).

Crankshaft Pulley Removal and Installation

Special Tools Required
- Holder handle 07JAB-001020A
- Holder attachment, 50 mm 07NAB-001040A
- Socket, 19 mm 07JAA-001020A or a commercially available 19 mm socket

Removal

1. Remove right front wheel.

2. Remove the splash shield (see step 24 on page 5-5).

3. Remove the drive belt (see page 4-43).

4. Hold the pulley with holder handle (A) and holder attachment (B).

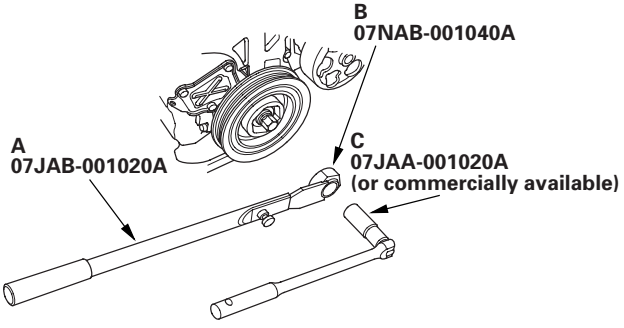

5. Remove the bolt with a 19 mm socket (C) and breaker bar.

Installation

1. Clean the crankshaft pulley (A), crankshaft (B), bolt (C), and washer (D). Lubricate with new engine oil as shown.

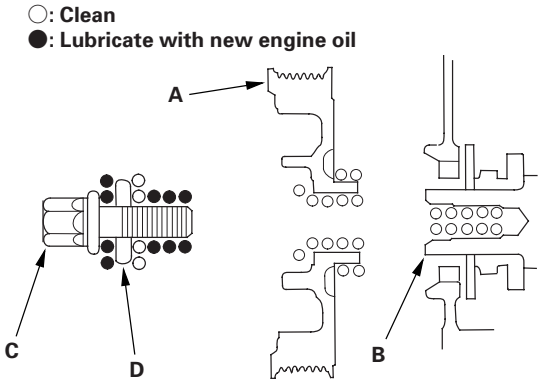

2. Install the crankshaft pulley, and hold the pulley with holder handle (A) and holder attachment (B).

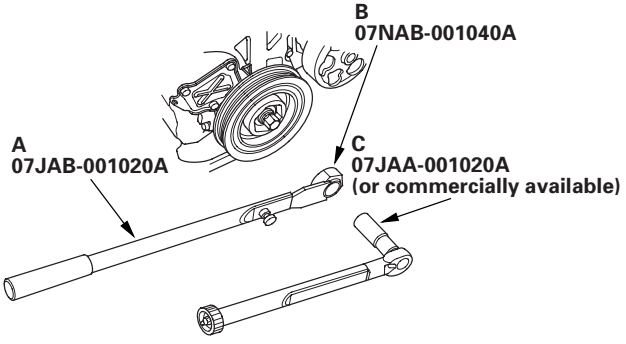

3. Tighten the bolt to 49 N·m (5.0 kgf·m, 36 lbf·ft) with a torque wrench and 19 mm socket (C). Do not use an impact wrench.

4. Tighten the pulley bolt an additional 90 °.

5. Install the drive belt (see page 4-43).

6. Install the splash shield (see step 25 on page 5-16).

7. Install right front wheel.

Cam Chain Removal

Special Tools Required
- Holder handle 07JAB-001020A
- Holder attachment, 50 mm 07NAB-001040A
- Socket, 19 mm 07JAA-001020A or a commercially available 19 mm socket

NOTE: Keep the cam chain away from magnetic fields.

1. Turn the crankshaft pulley so its TDC mark (A) lines up with the pointer (B).

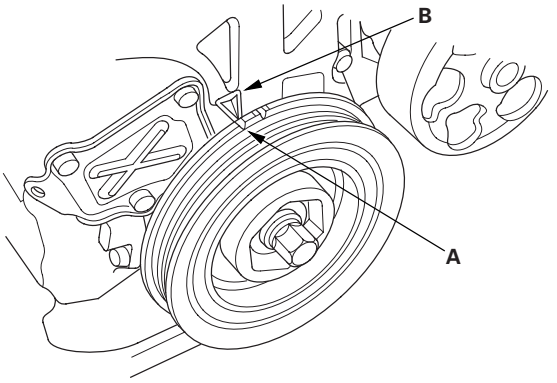

2. Remove the right front wheel.
3. Remove the splash shield (see step 24 on page 5-5).
4. Remove the drive belt (see page 4-43).
5. Remove the cylinder head cover (see page 6-28).
6. Check that the No. 1 piston TDC marks (A) on the variable valve timing control (VTC) actuator and exhaust camshaft sprocket are aligned.

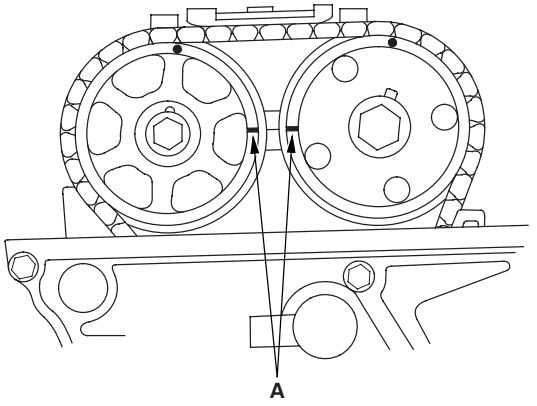

7. Hold the pulley with holder handle (A) and holder attachment (B).

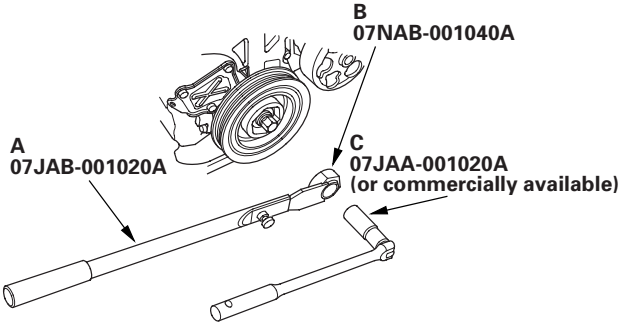

8. Remove the bolt with a 19 mm socket (C) and breaker bar.
9. K20A2, K20Z1 engines: Remove the oil cooler hose joint pipe from the water pump.

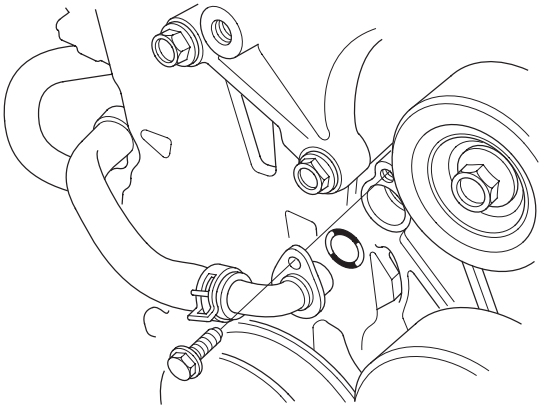

10. Disconnect the CKP sensor connector (A) and VTC oil control solenoid valve connector (B).

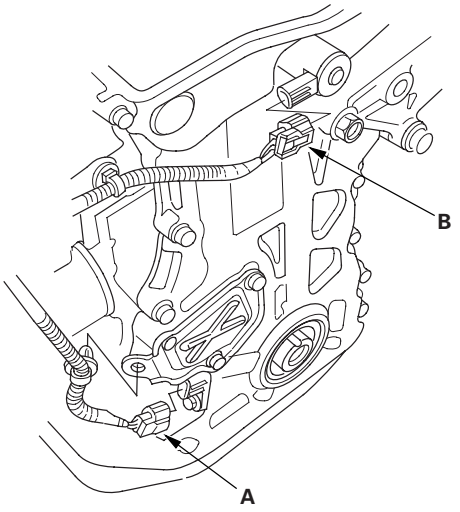

11. Remove the VTC oil control solenoid valve (see page 11-321).

12. Support the engine with a jack and wood block under the oil pan.

13. Remove the ground cable (A), and remove the upper bracket (B).

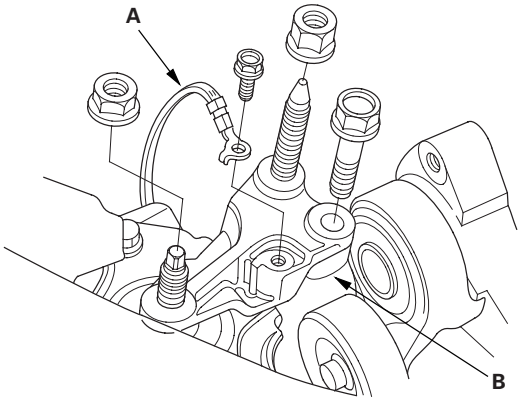

14. Remove the side engine mount bracket.

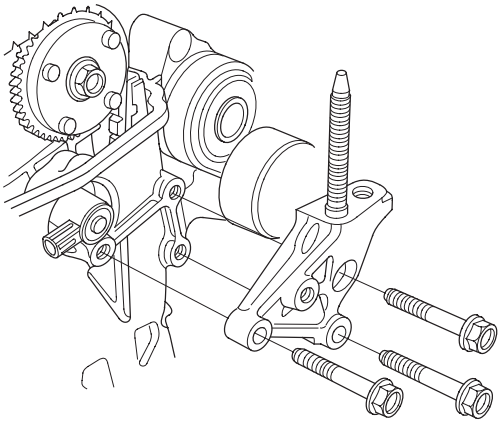

15. Remove the chain case.

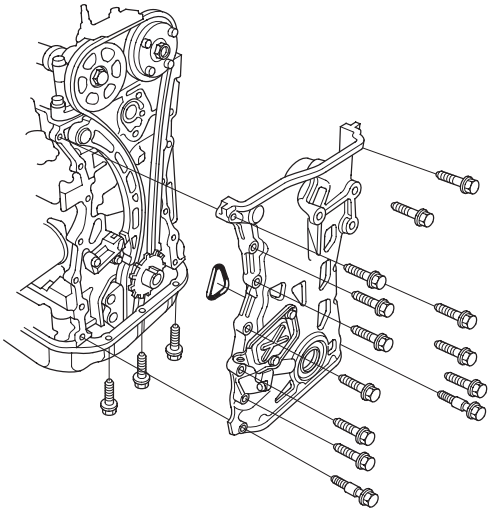

(cont'd)

Cam Chain Removal (cont'd)

16. Loosely install the crankshaft pulley.

17. Turn the crankshaft counterclockwise to compress the auto-tensioner.

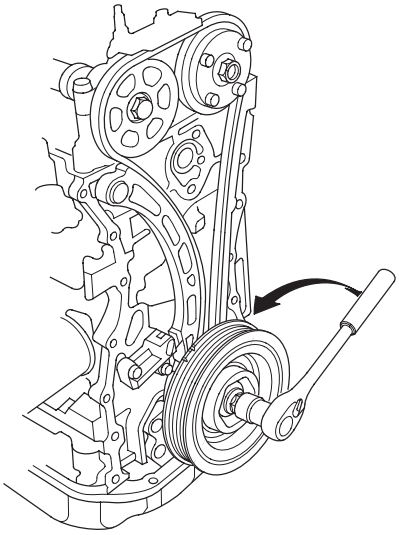

18. Align the holes on the lock (A) and the auto-tensioner (B), then insert a 1.2 mm (0.05 in.) diameter pin or lock pin (P/N 14511-PNA-003) (C) into the holes. Turn the crankshaft clockwise to secure the pin.

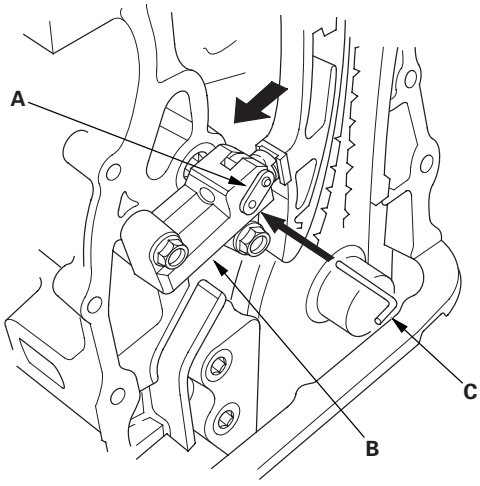

19. Remove the auto-tensioner.

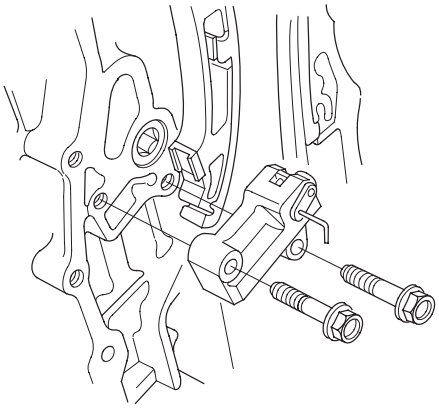

20. Remove the cam chain guide B.

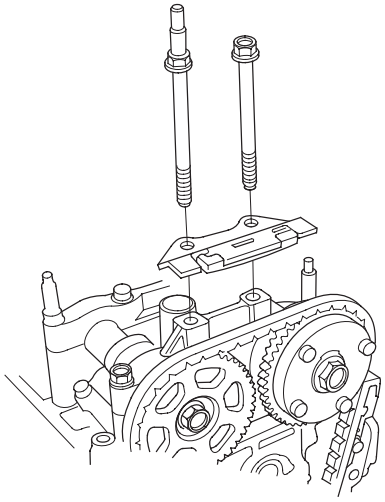

21. Remove the cam chain guide A and tensioner arm (B).

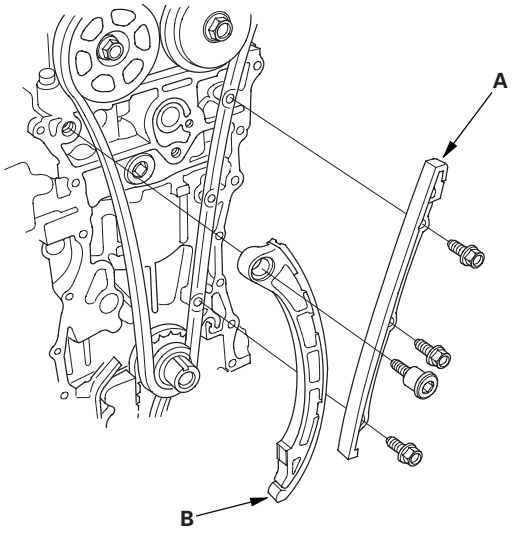

22. Remove the cam chain.

Cam Chain Installation

Special Tools Required
- Holder handle 07JAB-001020A
- Holder attachment, 50 mm 07NAB-001040A
- Socket, 19 mm 07JAA-001020A or a commercially available 19 mm socket

NOTE:
- Keep the cam chain away from magnetic fields.
- Before this procedure, check that the variable valve timing control (VTC) actuator is locked by turning the VTC actuator counterclockwise. If not locked, turn the VTC actuator clockwise until it stops, then recheck it. If it is still not locked, replace the VTC actuator.

1. Set the crankshaft to top dead center (TDC). Align the TDC mark (A) on the crankshaft sprocket with the pointer (B) on the engine block.

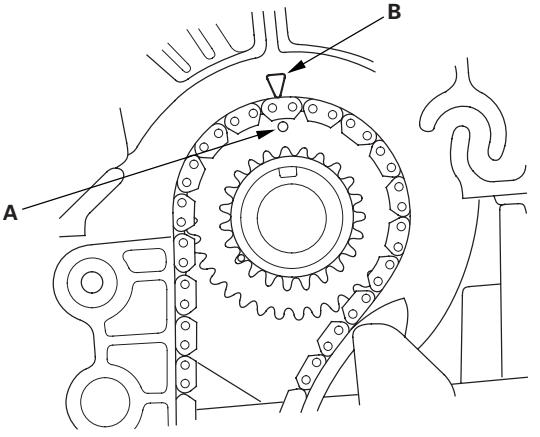

2. Set the camshafts to TDC. The punch mark (A) marked with an arrow on the variable valve timing control (VTC) actuator and the punch mark (B) on the exhaust camshaft sprocket should be at the top. Align the TDC marks (C) on the VTC actuator and exhaust camshaft sprocket.

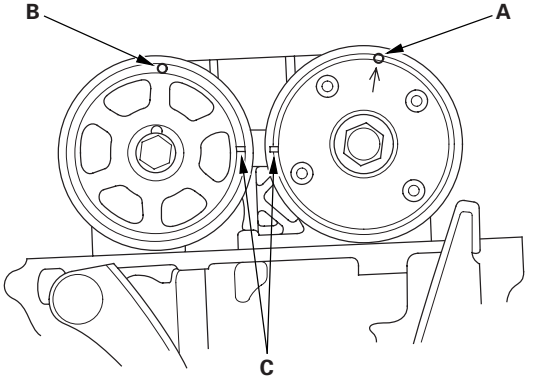

(cont'd)

Cam Chain Installation (cont'd)

3. Install the cam chain on the crankshaft sprocket with the colored piece (A) aligned with the punch mark (B) on the crankshaft sprocket.

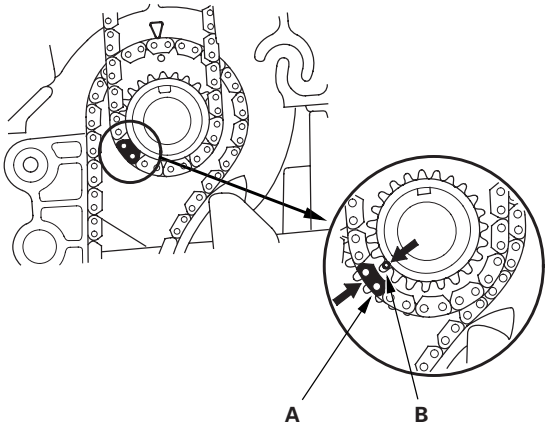

4. Install the cam chain on the VTC actuator and exhaust camshaft sprocket with the punch marks (A) aligned with the two colored pieces (B).

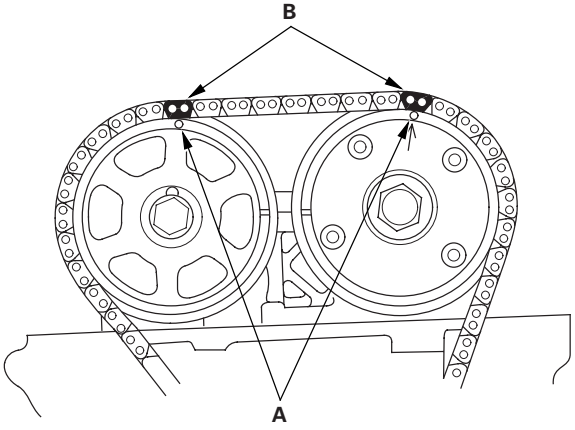

5. Install the cam chain guide A and tensioner arm (B).

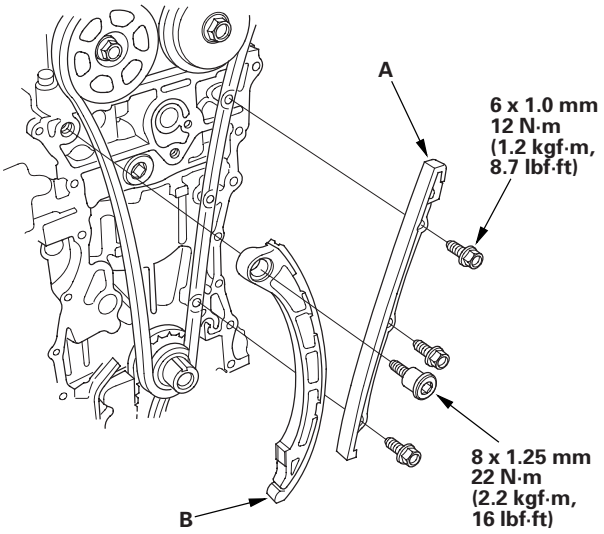

6. Install the auto-tensioner.

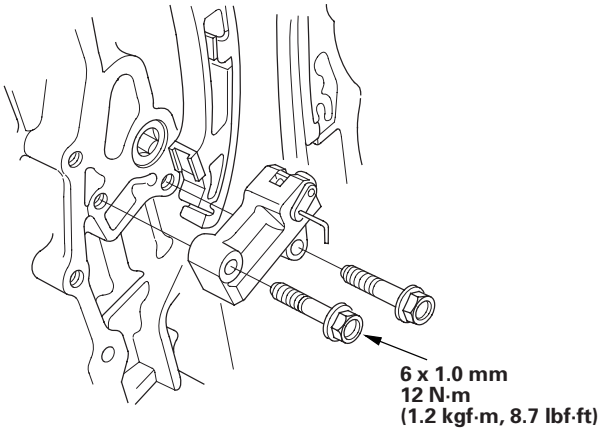

7. Install the cam chain guide B.

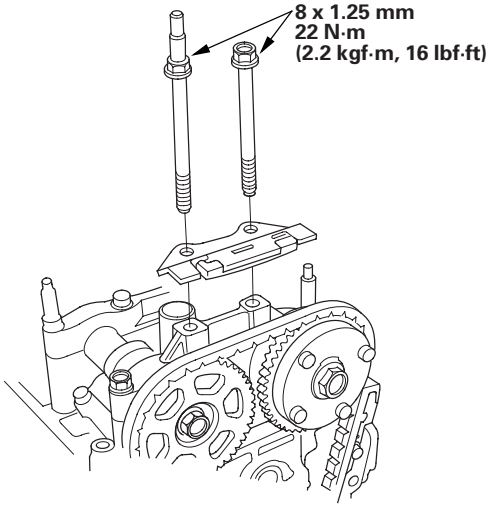

8. Remove the pin or lock pin (P/N 14511-PNA-003) from the auto-tensioner.

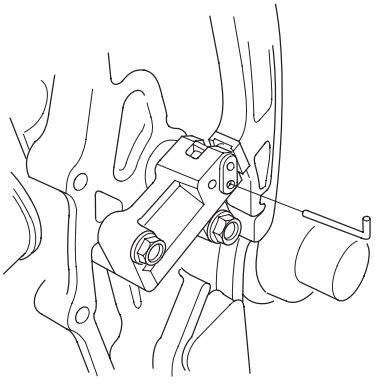

9. Check the chain case oil seal for damage. If the oil seal is damaged, replace the chain case oil seal (see page 6-24).

10. Remove all of the old liquid gasket from the chain case mating surfaces, bolts, and bolt holes.

11. Clean and dry the chain case mating surfaces.

12. Apply liquid gasket, P/N 08717-0004, 08718-0001, 08718-0002, 08718-0003, or 08718-0009, evenly to the engine block mating surface on the chain case.

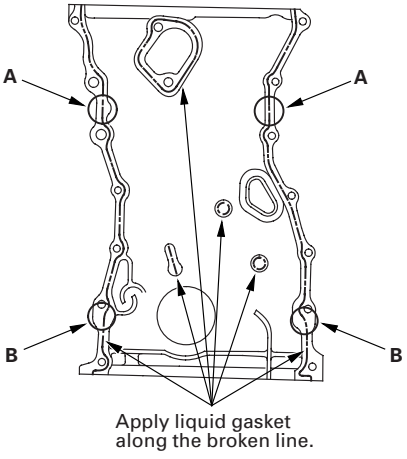

13. Apply liquid gasket to the engine block upper surface contact areas (A) on the chain case and lower block upper surface contact areas (B) on the chain case.

14. Apply liquid gasket, P/N 08717-0004, 08718-0001, 08718-0002, 08718-0003 or 08718-0009, evenly to the oil pan mating surface of the chain case.

    NOTE: Do not install components if too much time has passed after applying the liquid gasket (for P/N 08718-0002, no more than 4 minutes, for all others, no more than 5 minutes). Instead, remove the old residue and reapply the liquid gasket.

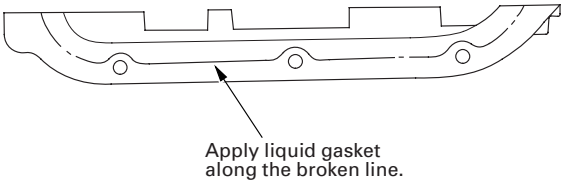

(cont'd)

Cam Chain Installation (cont'd)

15. Install the new O-ring (A) on the chain case. Set the edge of the chain case (B) to the edge of the oil pan (C), then install the chain case on the engine block (D). Wipe off the excess liquid gasket on the oil pan and chain case mating area.

    NOTE:
    - When installing the chain case, do not slide the bottom surface on the oil pan mounting surface.
    - Wait at least 30 minutes before filling the engine with oil.
    - Do not run the engine for at least 3 hours after installing the chain case.

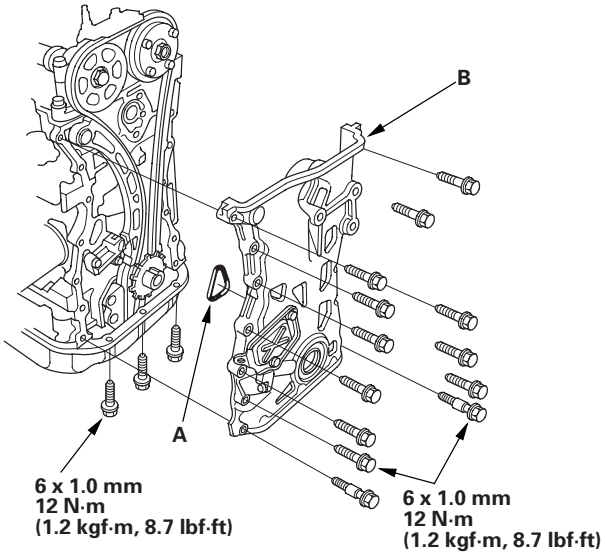

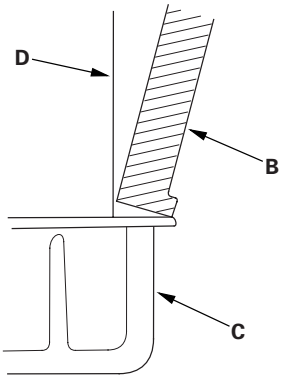

16. Install the side engine mount bracket.

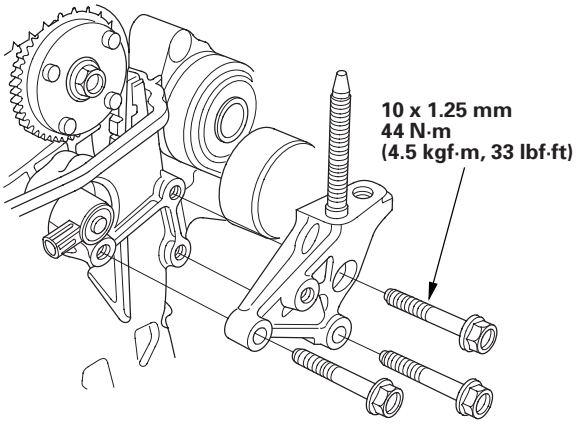

17. Install the upper bracket (A), then tighten the bolt/nuts in the numbered sequence shown.

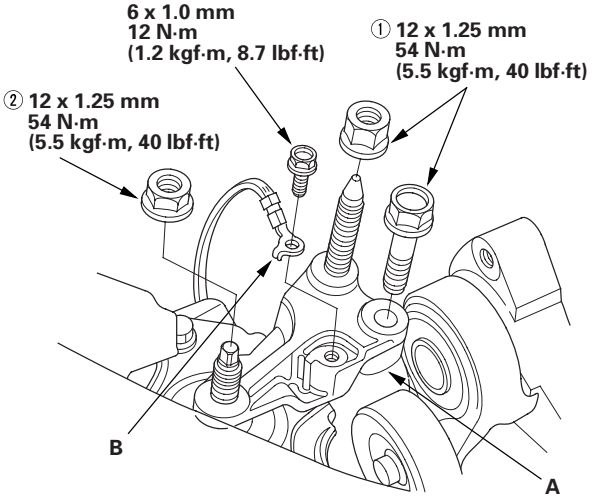

18. Install the ground cable (B).

19. Install the VTC oil control solenoid valve (see step 1 on page 11-321).

20. Connect the CKP sensor connector (A) and VTC oil control solenoid valve connector (B).

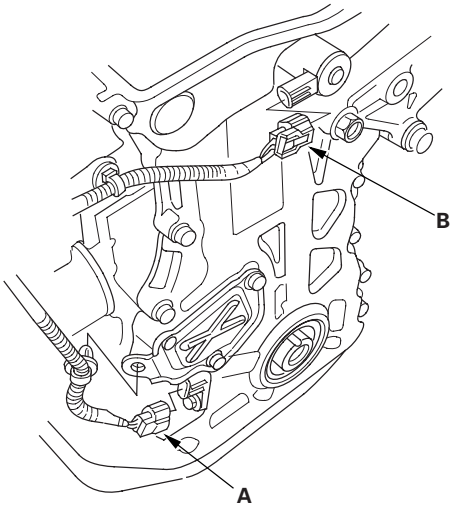

21. K20A2, K20Z1 engines: Install the oil cooler hose joint (A), using a new O-ring (B).

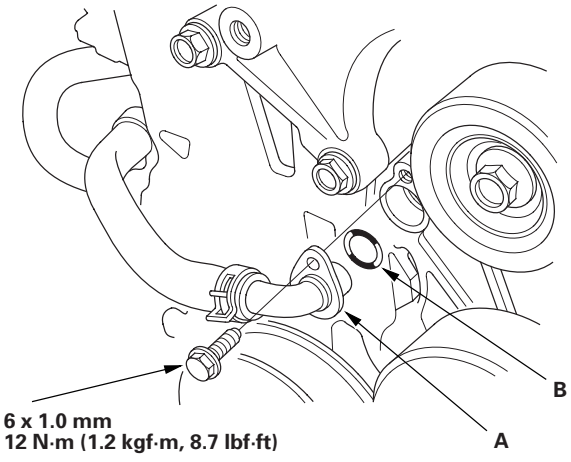

22. Clean the crankshaft pulley (A) and pulley bolt (B), and lubricate with new engine oil to the pulley bolt and washer (C).

○: **Clean**
●: **Lubricate with new engine oil**

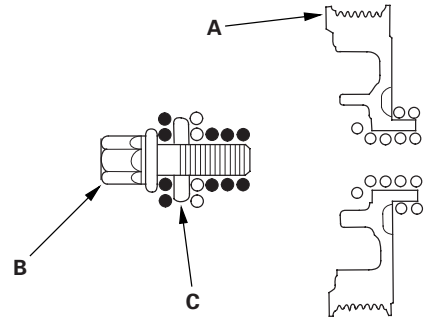

23. Install the crankshaft pulley, and hold the pulley with holder handle (A) and holder attachment (B).

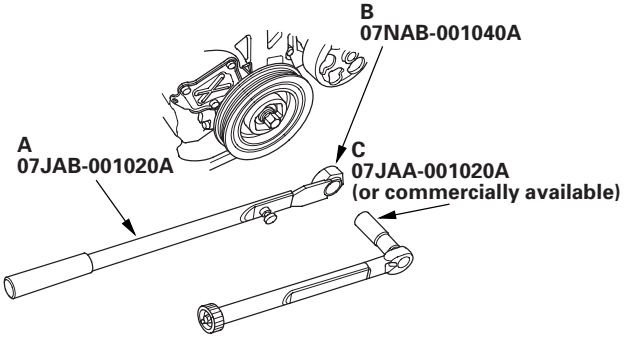

24. Tighten the bolt to 49 N·m (5.0 kgf·m, 36 lbf·ft) with a torque wrench and 19 mm socket (C). Do not use an impact wrench.

25. Tighten the pulley bolt an additional 90 °.

26. Install the cylinder head cover (see page 6-29).

27. Install the drive belt (see page 4-43).

(cont'd)

Cam Chain Installation (cont'd)

28. Install the splash shield.

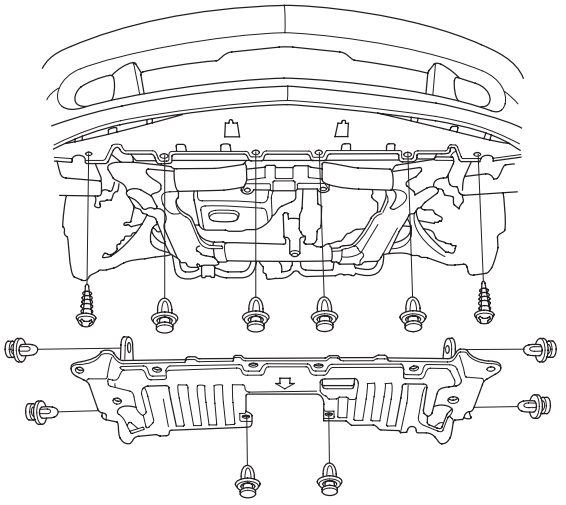

29. Install the right front wheel.

30. 2005-2006 models: Do the crankshaft position (CKP) pattern clear/CKP pattern learn procedure (see page 11-5).

Auto-tensioner Removal/ Installation

Removal

1. Remove the chain case cover.

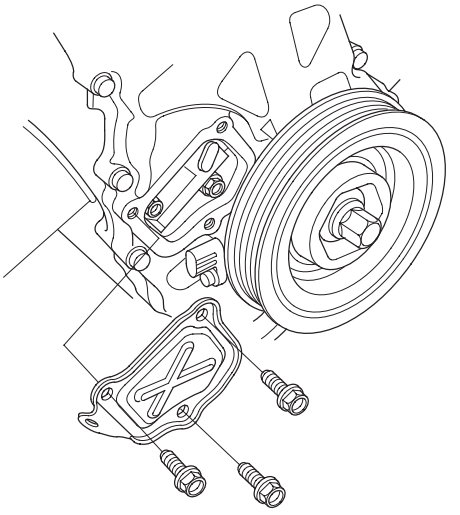

2. Turn the crankshaft counterclockwise to compress the auto-tensioner.

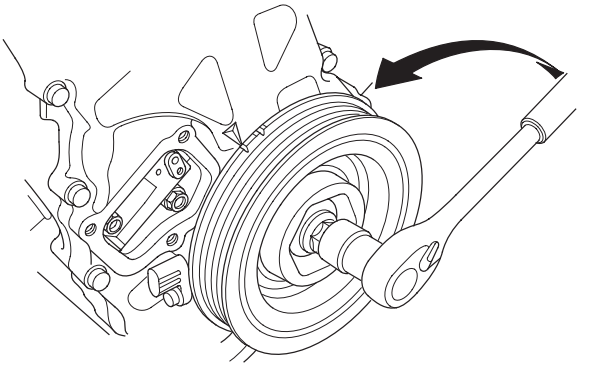

3. Align the holes on the lock (A) and the auto-tensioner (B), then insert a 1.2 mm (0.05 in.) diameter pin or lock pin (P/N 14511-PNA-003) (C) into the holes. Turn the crankshaft clockwise to secure the pin.

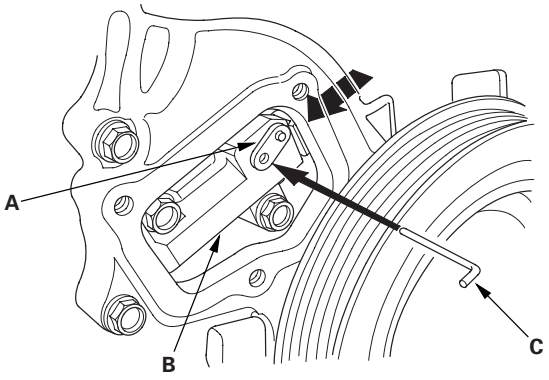

4. Remove the auto-tensioner.

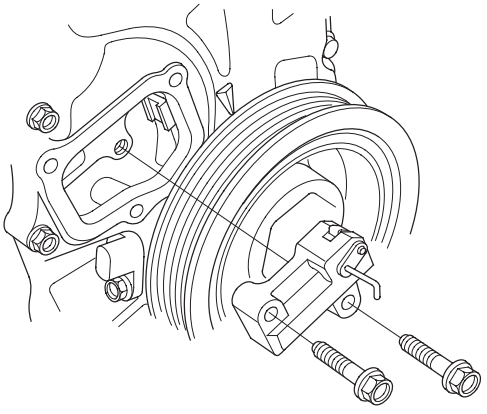

Installation

1. Install the auto-tensioner.

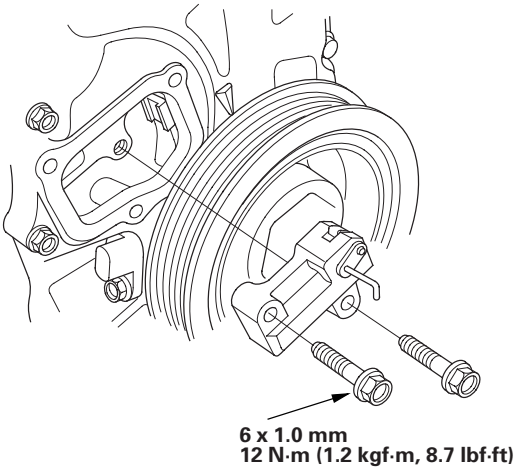

2. Remove the pin or lock pin (P/N 14511-PNA-003) from the auto-tensioner.

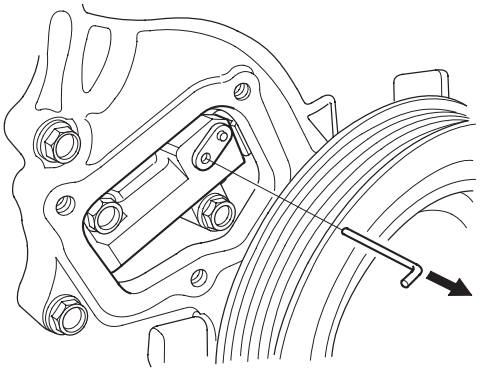

(cont'd)

Auto-tensioner Removal/ Installation (cont'd)

3. Remove all of the old liquid gasket from the chain case cover mating surfaces, bolts and bolt holes.

4. Clean and dry the chain case cover mating surfaces.

5. Apply liquid gasket, P/N 08717-0004, 08718-0001, 08718-0002, 08718-0003, or 08718-0009, evenly to the chain case mating surface of the chain case.

   NOTE: Do not install components if too much time has passed after applying the liquid gasket (for P/N 08718-0002, no more than 4 minutes, for all others, no more than 5 minutes). Instead, remove the old residue and reapply the liquid gasket.

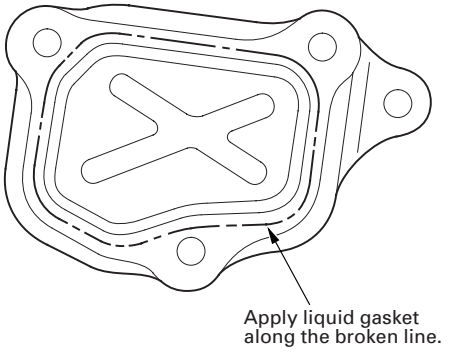

6. Install the chain case cover.

   NOTE:
   - Wait at least 30 minutes before filling the engine with oil.
   - Do not run the engine for at least 3 hours after installing the chain case cover.

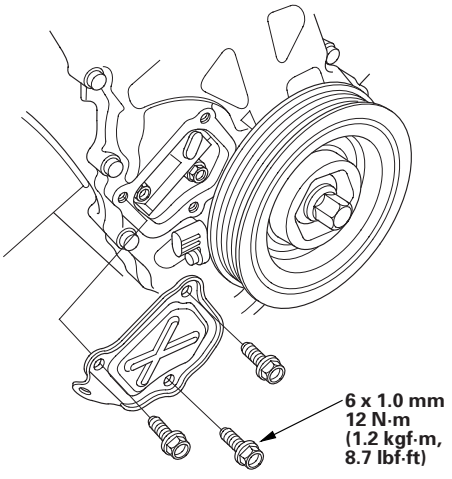

Chain Case Oil Seal Installation

Special Tools Required
- Driver 07749-0010000
- Attachment, 52 x 55 mm 07746-0010400

1. Use the special tools to drive a new oil seal squarely into the chain case to the specified installed height.

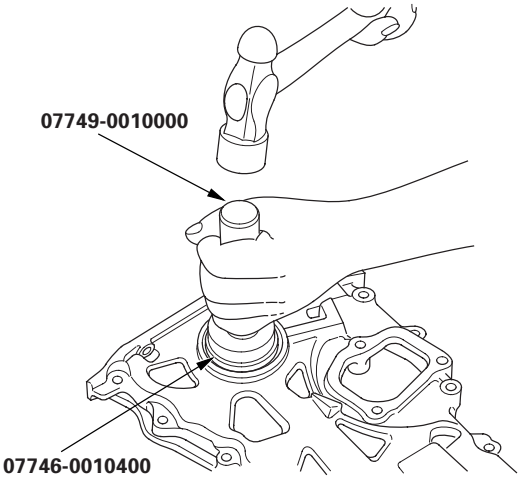

2. Measure the distance between the chain case surface (A) and oil seal (B).

   Oil Seal Installed Height:
   33.0—33.7 mm (1.30—1.33 in.)

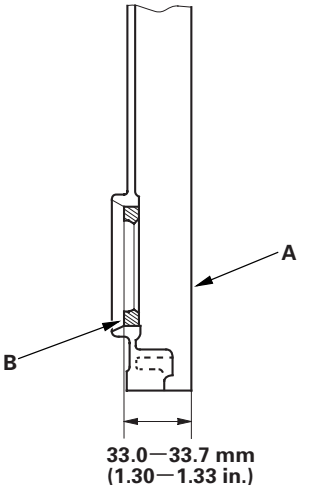

Cam Chain Inspection

1. Remove the front wheels.

2. Remove the splash shield (see step 24 on page 5-5).

3. Remove the drive belt (see page 4-43).

4. Remove the cylinder head cover (see page 6-28).

5. Remove the crankshaft pulley (see page 6-13).

6. K20A2, K20Z1 engines: Remove the oil cooler hose joint pipe from the water pump (see step 9 on page 6-14).

7. Disconnect the crankshaft position (CKP) sensor connector and variable valve timing control (VTC) oil control solenoid valve connector (see step 10 on page 6-15).

8. Remove the VTC oil control solenoid valve (see page 11-321).

9. Support the engine with a jack and wood block under the oil pan.

10. Remove the ground cable, and remove the upper bracket (see step 13 on page 6-15).

11. Remove the side engine mount bracket (see step 14 on page 6-15).

12. Remove the chain case (see step 15 on page 6-15).

13. Measure the tensioner rod length between the tensioner body and bottom of the flat surface section on the tensioner rod. If the length is over the tolerance, replace the cam chain and oil pump chain.

    Tensioner Rod Length
    Service Limit: 13.5 mm (0.53 in.)

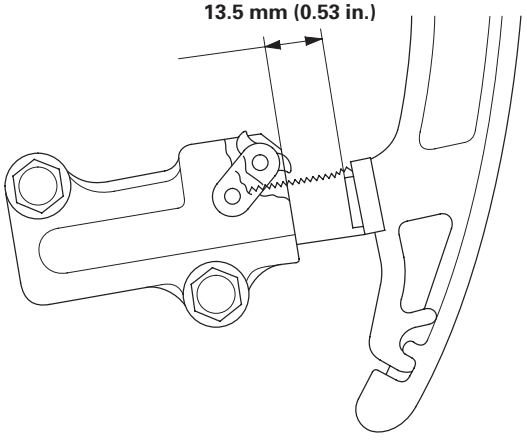

14. Check the chain case oil seal for damage. If the oil seal is damaged, replace the chain case oil seal (see page 6-24).

15. Remove all of the old liquid gasket from the chain case mating surfaces, bolt and bolt holes.

16. Clean and dry the chain case mating surfaces.

17. Apply liquid gasket, P/N 08717-0004, 08718-0001, 08718-0002, 08718-0003, or 08718-0009, evenly to the engine block mating surface of the chain case (see step 12 on page 6-19).

18. Apply liquid gasket to the engine block upper surface contact areas on the chain case and lower block upper surface contact areas on the chain case (see step 13 on page 6-19).

19. Apply liquid gasket, P/N 08717-0004, 08718-0001, 08718-0002, 08718-0003 or 08718-0009, evenly to the oil pan mating surface of the chain case (see step 14 on page 6-19).

    NOTE: Do not install components if too much time has passed after applying the liquid gasket (for P/N 08718-0002, no more than 4 minutes, for all others, no more than 5 minutes). Instead, remove the old residue and reapply the liquid gasket.

(cont'd)

Cam Chain Inspection (cont'd)

20. Install the new O-ring on the chain case. Set the edge of the chain case to the edge of the oil pan, then install the chain case on the engine block (see step 15 on page 6-20). Wipe off the excess liquid gasket on the oil pan and chain case mating area.

    NOTE:
    - When installing the chain case, do not slide the bottom surface on the oil pan mounting surface.
    - Wait at least 30 minutes before filling the engine with oil.
    - Do not run the engine for at least 3 hours after installing the chain case.

21. Install the side engine mount bracket (see step 16 on page 6-20).

22. Install the upper bracket and the ground cable (see step 17 on page 6-20).

23. Install the VTC oil control solenoid valve (see page 11-321).

24. Connect the CKP sensor connector and VTC oil control solenoid valve connector (see step 20 on page 6-21).

25. K20A2, K20Z1 engines: Install the oil cooler hose joint, using a new O-ring (see step 21 on page 6-21).

26. Install the crankshaft pulley (see page 6-13).

27. Install the cylinder head cover (see page 6-29).

28. Install the drive belt (see page 4-43).

29. Install the splash shield (see step 25 on page 5-16).

30. Install the front wheels.

31. 2005-2006 models: Do the CKP pattern clear/CKP learn procedure (see page 11-5).

CKP Pulse Plate Replacement

1. Remove the right front wheel.
2. Remove the splash shield (see step 24 on page 5-5).
3. Remove the drive belt (see page 4-43).
4. Remove the cylinder head cover (see page 6-28).
5. Remove the crankshaft pulley (see page 6-13).
6. Disconnect the crankshaft position (CKP) sensor connector and variable valve timing control (VTC) oil control solenoid valve connector (see step 10 on page 6-15).
7. Remove the VTC oil control solenoid valve (see page 11-321).
8. Support the engine with a jack and wood block under the oil pan.
9. Remove the ground cable, and remove the upper bracket (see step 13 on page 6-15).
10. Remove the side engine mount bracket (see step 14 on page 6-15).
11. Remove the chain case (see step 15 on page 6-15).
12. Remove the CKP pulse plate.

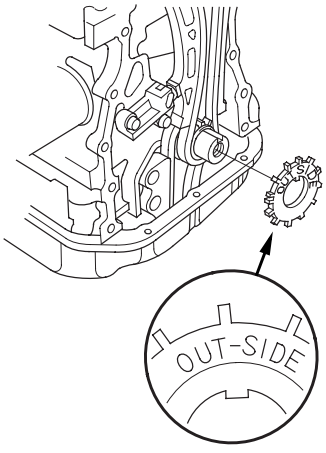

13. Install the CKP pulse plate.
14. Check the chain case oil seal for damage. If the oil seal is damaged, replace the chain case oil seal (see page 6-24).
15. Remove all of the old liquid gasket from the chain case mating surfaces, bolt, and bolt holes.
16. Clean and dry the chain case mating surfaces.
17. Apply liquid gasket, P/N 08717-0004, 08718-0001, 08718-0002, 08718-0003 or 08718-0009, evenly to the engine block mating surface of the chain case (see step 12 on page 6-19).
18. Apply liquid gasket to the engine block upper surface contact areas on the chain case and lower block upper surface contact areas on the chain case (see step 13 on page 6-19).
19. Apply liquid gasket, P/N 08717-0004, 08718-0001, 08718-0002, 08718-0003 or 08718-0009, evenly to the oil pan mating surface of the chain case (see step 14 on page 6-19).

    NOTE: Do not install components if too much time has passed after applying the liquid gasket (for P/N 08718-0002, no more than 4 minutes, for all others, no more than 5 minutes). Instead, remove the old residue and reapply the liquid gasket.

20. Install the new O-ring on the chain case. Set the edge of the chain case to the edge of the oil pan, then install the chain case on the engine block. Wipe off the excess liquid gasket on the oil pan and chain case mating area (see step 15 on page 6-20).

    NOTE: When installing the chain case, do not slide the bottom surface on the oil pan mounting surface.

21. Install the side engine mount bracket (see step 16 on page 6-20).
22. Install the upper bracket and the ground cable (see step 17 on page 6-20).

(cont'd)

CKP Pulse Plate Replacement (cont'd)

23. Install the VTC oil control solenoid valve (see page 11-321).
24. Connect the CKP sensor connector and VTC oil control solenoid valve connector (see step 20 on page 6-21).
25. Install the crankshaft pulley (see page 6-13).
26. Install the cylinder head cover (see page 6-29).
27. Install the drive belt (see page 4-43).
28. Install the splash shield (see step 28 on page 6-22).
29. Install the right front wheel.
30. 2005-2006 models: Do the cranksaft position (CKP) pattern clear/CKP pattern learn procedure (see page 11-5).

Cylinder Head Cover Removal

1. Remove the intake manifold cover (see step 1 on page 9-3).
2. Remove the four ignition coils (see page 4-26).
3. Remove the bolt (A) securing the power steering hose bracket.

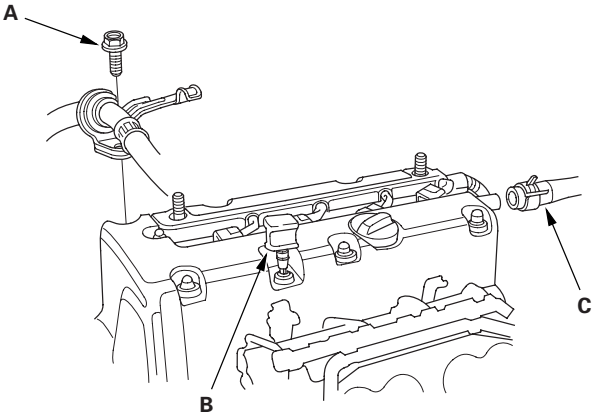

4. Remove the dipstick (B) and breather hose (C).
5. Remove the cylinder head cover.

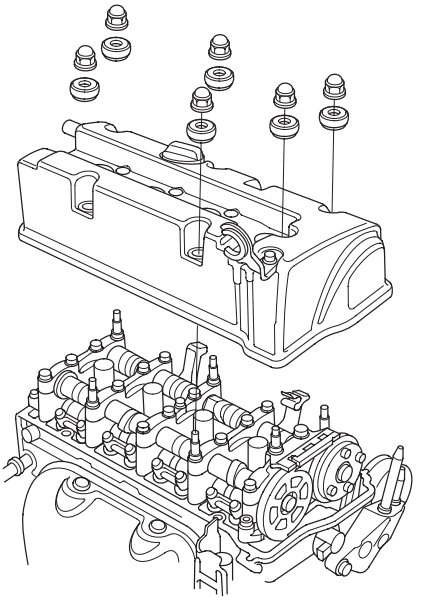

Cylinder Head Cover Installation

1. Thoroughly clean the head cover gasket and the groove.

2. Install the head cover gasket (A) in the groove of the cylinder head cover (B).

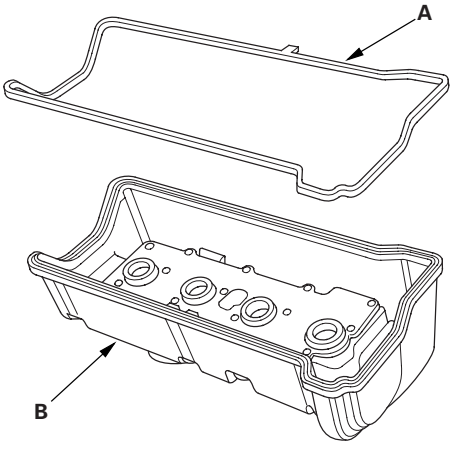

3. Check that the mating surfaces are clean and dry.

4. Apply liquid gasket, P/N 08717-0004, 08718-0001, 08718-0002, 08718-0003, or 08718-0009 on the chain case and the No. 5 rocker shaft holder mating areas.

   NOTE: Do not install components if too much time has passed after applying the liquid gasket (for P/N 08718-0002, no more than 4 minutes, for all others, no more than 5 minutes). Instead, remove the old residue and reapply the liquid gasket.

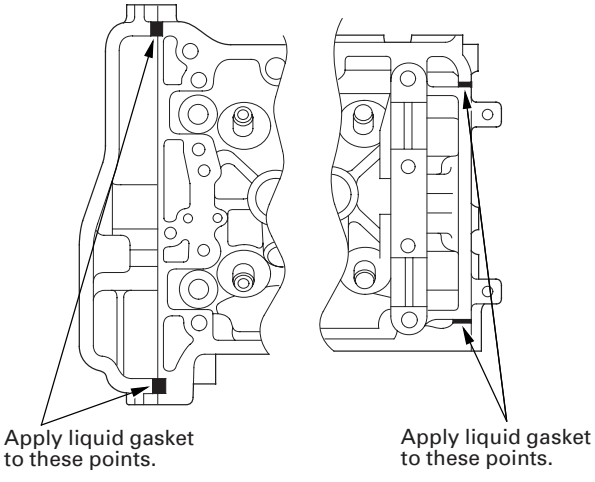

5. Set the spark plug seals (A) on the spark plug tubes. Once the cylinder head cover (B) is on the cylinder head, slide the cover slightly back and forth to seat the head cover gasket.

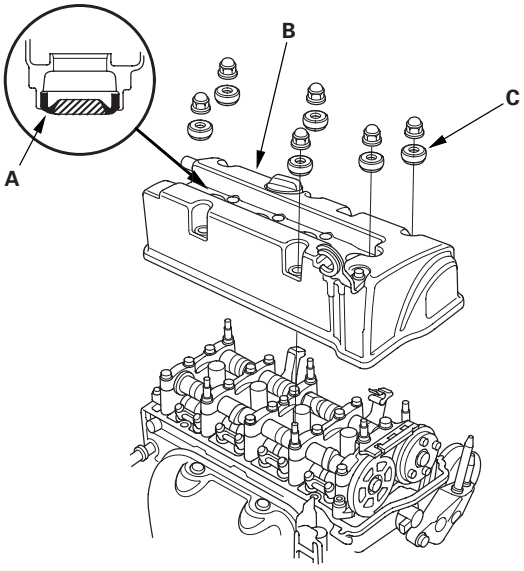

6. Inspect the cover washers (C). Replace any washer that is damaged or deteriorated.

(cont'd)

Cylinder Head Cover Installation (cont'd)

7. Tighten the bolts in two or three steps. In the final step, tighten all bolts, in sequence, to 9.8 N·m (1.0 kgf·m, 7.2 lbf·ft).

   NOTE:
   - Wait at least 30 minutes before filling the engine with oil.
   - Do not run the engine for at least 3 hours after installing the cylinder head.

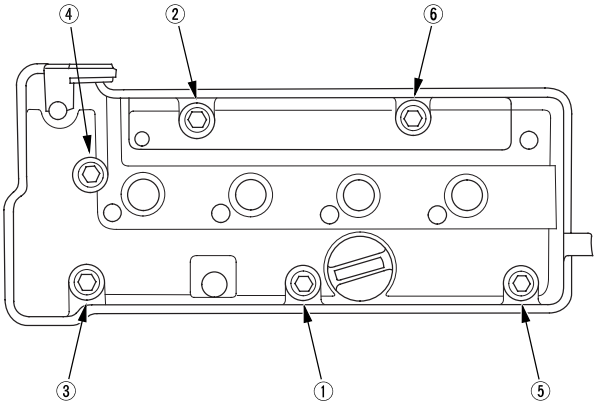

8. Install the dipstick (A) and breather hose (B).

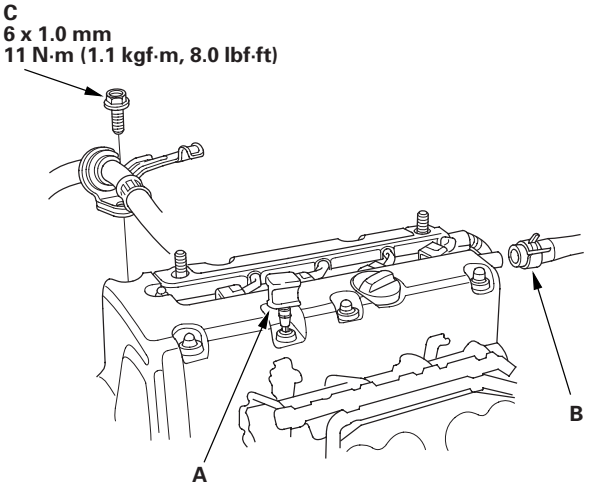

9. Tighten the bolt (C) securing the power steering hose bracket.

10. Install the four ignition coils (see page 4-26).

11. Check that all tubes, hoses, and connectors are installed correctly.

12. Install the intake manifold cover.

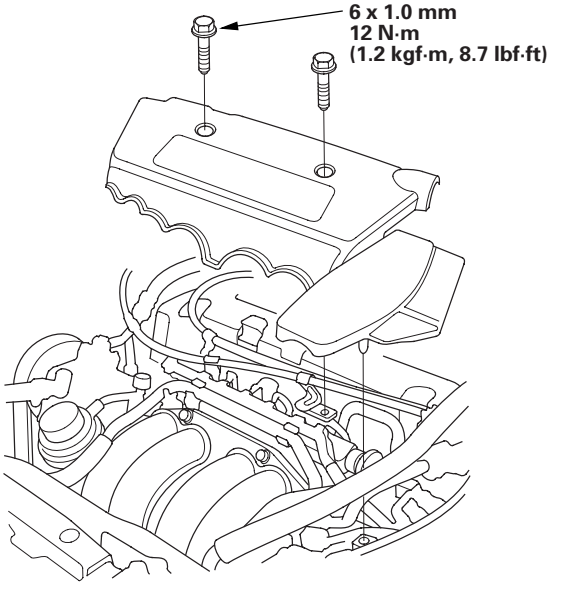

Cylinder Head Removal

NOTE:
- Use fender covers to avoid damaging painted surfaces.
- To avoid damaging the wires and terminals, unplug the wiring connectors carefully while holding the connector portion.
- To avoid damaging the cylinder head, wait until the engine coolant temperature drops below 100 ℉ (38 ℃) before loosening the cylinder head bolts.
- Mark all wiring and hoses to avoid misconnection. Also, be sure that they do not contact other wiring or hoses, or interfere with other parts.

1. Relieve fuel pressure (see page 11-360).

2. Drain the engine coolant (see page 10-6).

3. K20A3 engine: Remove the fuel feed hose (see page 11-369).

4. Remove the drive belt (see page 4-43).

5. Remove the intake manifold:

   - K20A3 engine (see page 9-3)
   - K20A2, K20Z1 engines (see page 9-9)

6. Remove the water bypass hose (A).

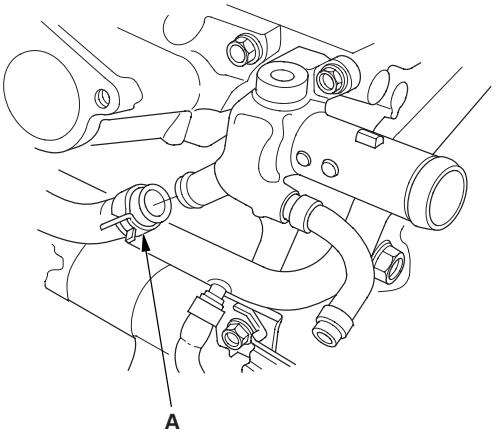

7. Remove the exhaust manifold (see page 9-14).

8. Remove the cam chain (see page 6-14).

9. Remove the engine wire harness connectors and wire harness clamps from the cylinder head.

   - Four injector connectors (K20A3 engine)
   - Engine coolant temperature (ECT) sensor connector
   - Camshaft position (CMP) sensor A connector (Intake side)
   - Camshaft position (CMP) sensor B connector (Exhaust side)

10. Remove the upper radiator hose (A) and heater hose (B).

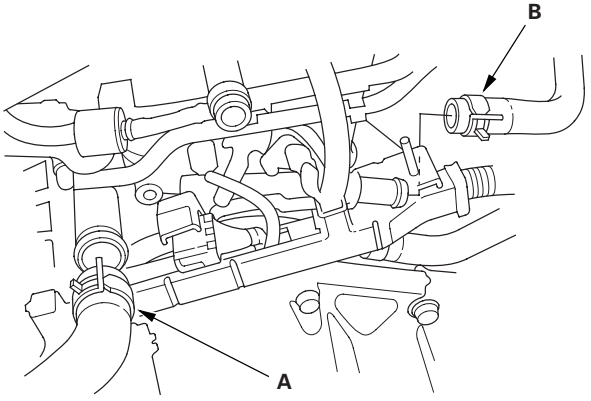

11. Remove the harness holder (A) from the bracket, then remove the connecting pipe mounting bolt (B) and water bypass line mounting bolts (C).

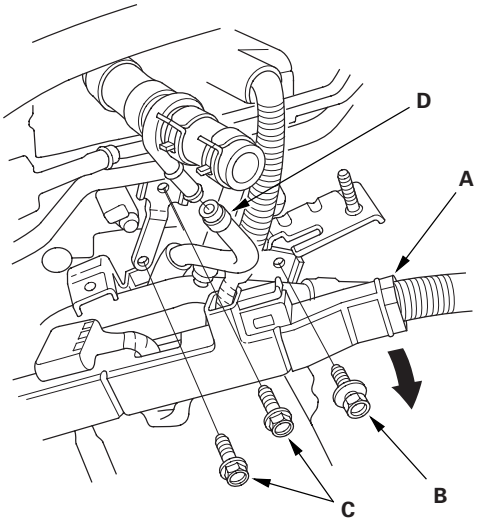

12. Remove the water bypass hose (D).

(cont'd)

Cylinder Head Removal (cont'd)

13. Remove the rocker arm assembly (see page 6-35).

14. Remove the cylinder head bolts. To prevent warpage, unscrew the bolts in sequence 1/3 turn at a time; repeat the sequence until all bolts are loosened.

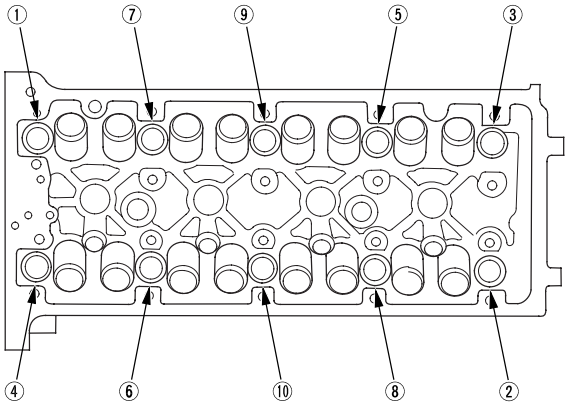

15. Remove the cylinder head.

CMP Pulse Plate A Replacement

1. Remove the cylinder head cover (see page 6-28).

2. Hold the intake camshaft with an open-end wrench, then loosen the bolt.

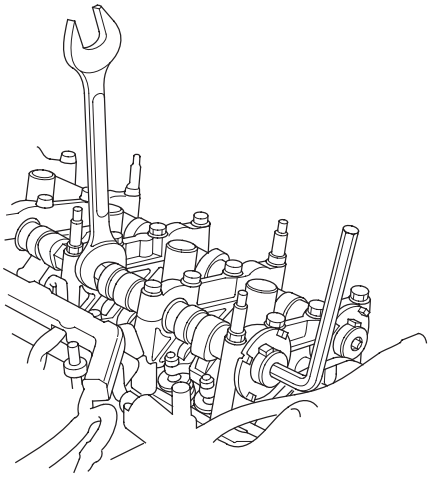

3. Remove the camshaft position (CMP) pulse plate A.

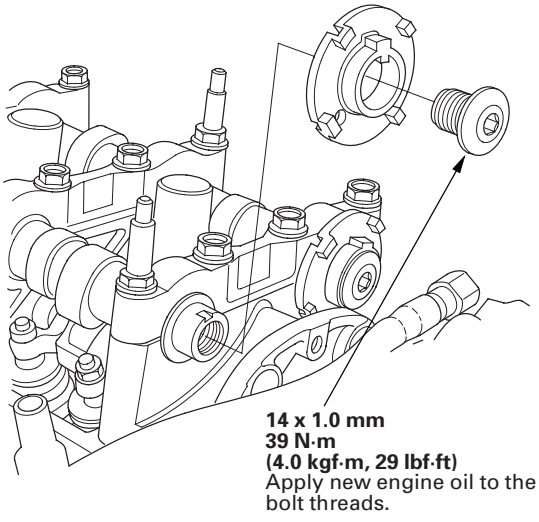

4. Install the CMP pulse plate A in the reverse order of removal.

CMP Pulse Plate B Replacement

1. Remove the cylinder head cover (see page 6-28).

2. Hold the exhaust camshaft with an open-end wrench, then loosen the bolt.

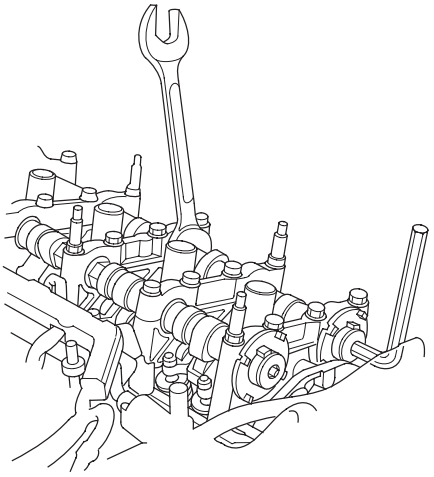

3. Remove the camshaft position (CMP) pulse plate B.

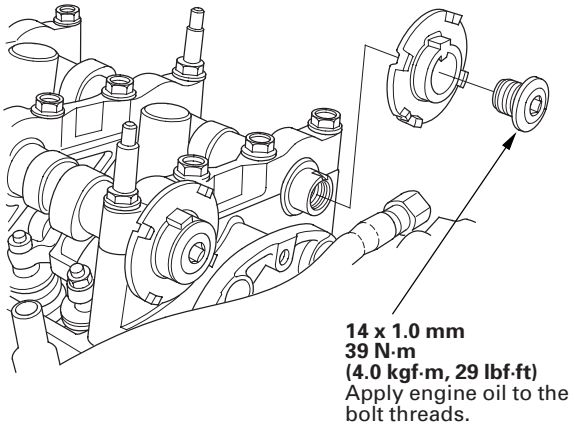

4. Install the CMP pulse plate B in the reverse order of removal.

VTC Actuator, Exhaust Camshaft Sprocket Removal and Installation

Removal

1. Remove the cam chain (see page 6-14).

2. Hold the camshaft with an open-end wrench, then loosen the variable valve timing control (VTC) actuator mounting bolt and exhaust camshaft sprocket mounting bolt.

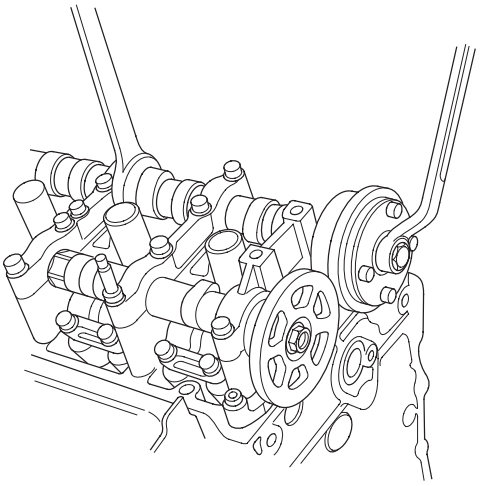

3. To the VTC actuator reused, do the following steps.

   –1 Remove the intake camshaft, and seal the advance holes and retard holes in the No. 1 camshaft journal with tape (see step 6 on page 6-10).
   –2 Punch a hole in the tape over one of the advance holes (see step 7 on page 6-10).
   –3 Apply air to the advance hole to release the lock (see step 8 on page 6-10).

4. Remove the VTC actuator and exhaust camshaft sprocket.

(cont'd)

VTC Actuator, Exhaust Camshaft Sprocket Removal and Installation (cont'd)

Installation

1. Install the VTC actuator and exhaust camshaft sprocket.

   NOTE: Install the VTC actuator in the unlock position.

2. Apply engine oil to the threads of the VTC actuator mounting bolt and exhaust camshaft mounting bolt, then install them.

3. Hold the camshaft with an open-end wrench, then tighten the bolts.

   Specified Torque
   VTC Actuator Mounting Bolt:
   113 N·m (11.5 kgf·m, 83 lbf·ft)
   Exhaust Camshaft Sprocket Mounting Bolt:
   72 N·m (7.3 kgf·m, 53 lbf·ft)

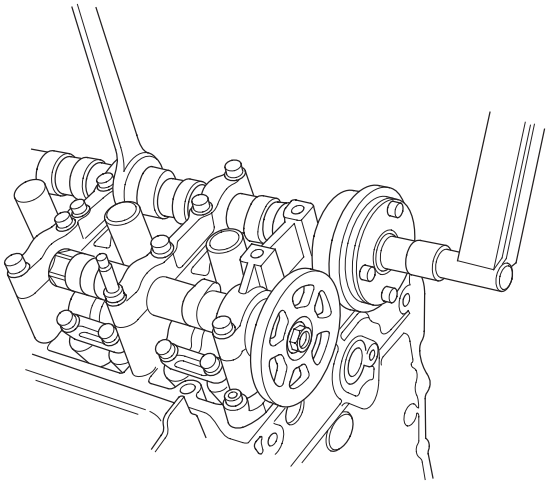

4. Hold the camshaft, and turn the VTC actuator clockwise until you hear it click.

5. Install the cam chain (see page 6-17).

Cylinder Head Inspection for Warpage

1. Remove the cylinder head (see page 6-31).

2. Inspect the camshaft (see page 6-40).

3. Check the cylinder head for warpage. Measure along the edges, and three ways across the center.

   - If warpage is less than 0.05 mm (0.002 in.) cylinder head resurfacing is not required.
   - If warpage is between 0.05 mm (0.002 in.) and 0.2 mm (0.008 in.), resurface the cylinder head.
   - Maximum resurface limit is 0.2 mm (0.008 in.) based on a height of 104 mm (4.09 in.).

   Cylinder Head Height
   Standard (New): 103.95—104.05 mm (4.093—4.096 in.)

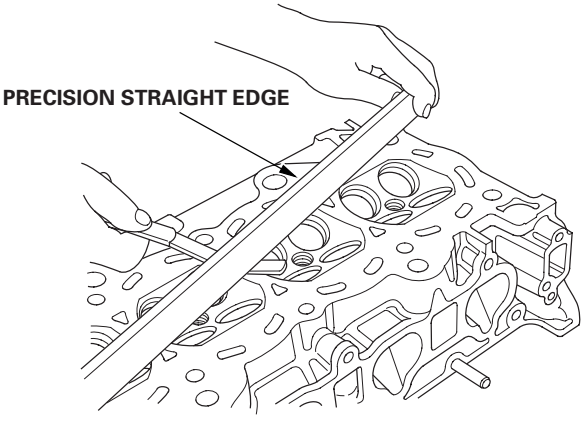

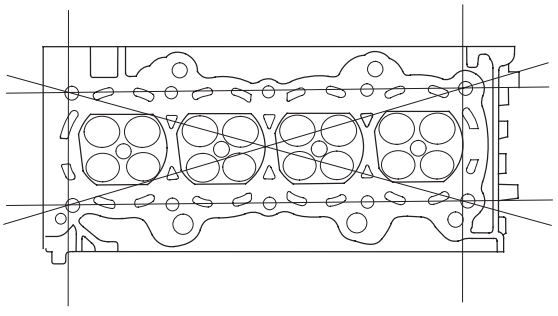

Rocker Arm Assembly Removal

1. Remove the cam chain (see page 6-14).

2. Loosen the rocker arm adjusting screws (A).

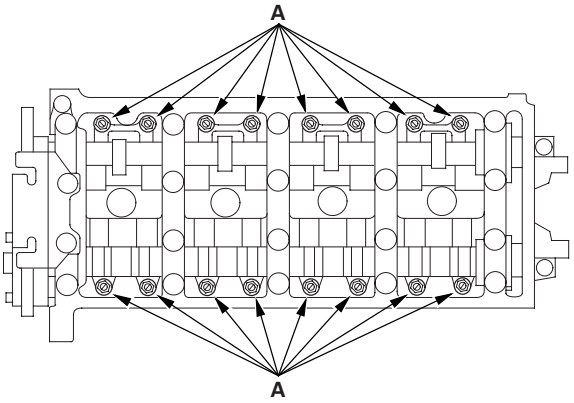

3. Remove the camshaft holder bolts. To prevent damaging the camshafts, unscrew the bolts two turns at a time, in a crisscross pattern.

   NOTE: Bolt ① is not on all engines.

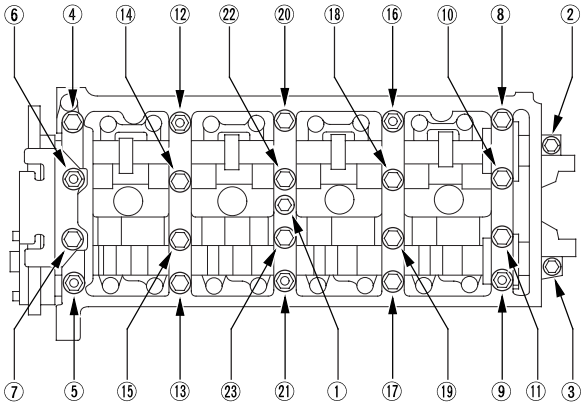

4. Remove the cam chain guide B, camshaft holders, and camshafts.

5. Insert the bolts (A) into the rocker shaft holder, then remove the rocker arm assembly (B).

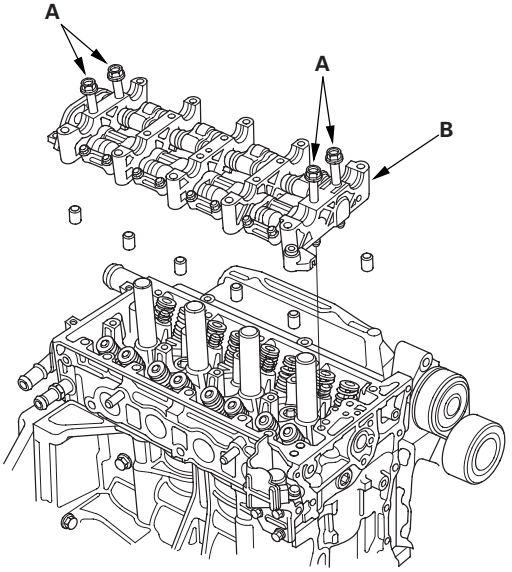

Rocker Arm and Shaft Disassembly/Reassembly

NOTE:
- Identify parts as they are removed to ensure reinstallation in their original location.
- Inspect the rocker shafts and rocker arms (see page 6-39).
- The rocker arms must be installed in the same positions if reused.
- When removing or installing the rocker arm assembly, do not remove the camshaft holder bolts. The bolts will keep the holders, springs, and rocker arms on the shaft.
- Prior to reassembling, clean all the parts in solvent, dry them, and apply new engine oil to any contact points.
- Bundle the rocker arms with rubber bands to keep them together as a set.
- When replacing the VTEC rocker arm assembly, remove the fastening hardware from the new VTEC rocker arm assembly.

K20A3 engine (2002 model):

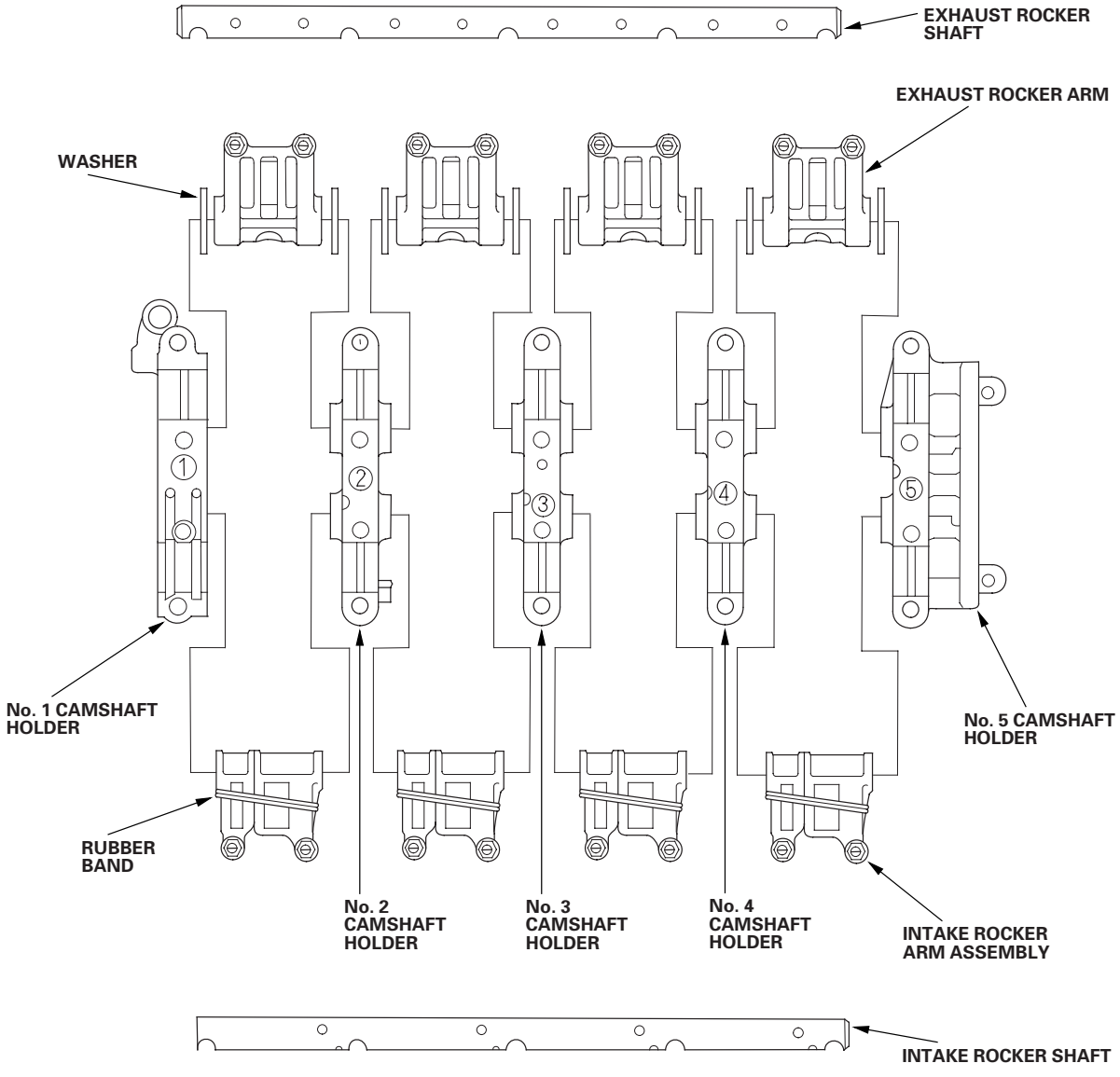

K20A3 engine (2003-2006 models):

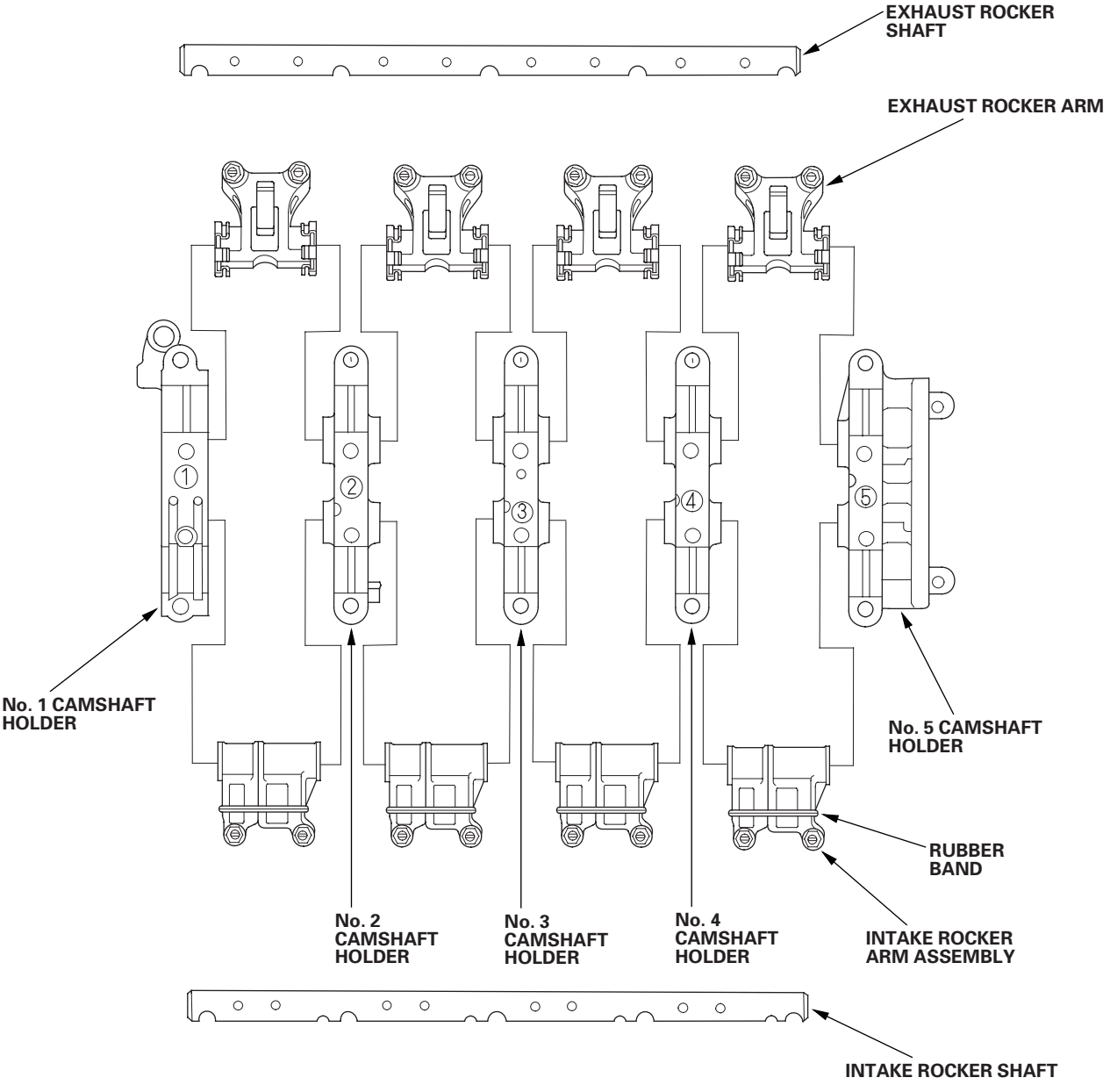

(cont'd)

Rocker Arm and Shaft Disassembly/Reassembly (cont'd)

K20A2, K20Z1 engines:

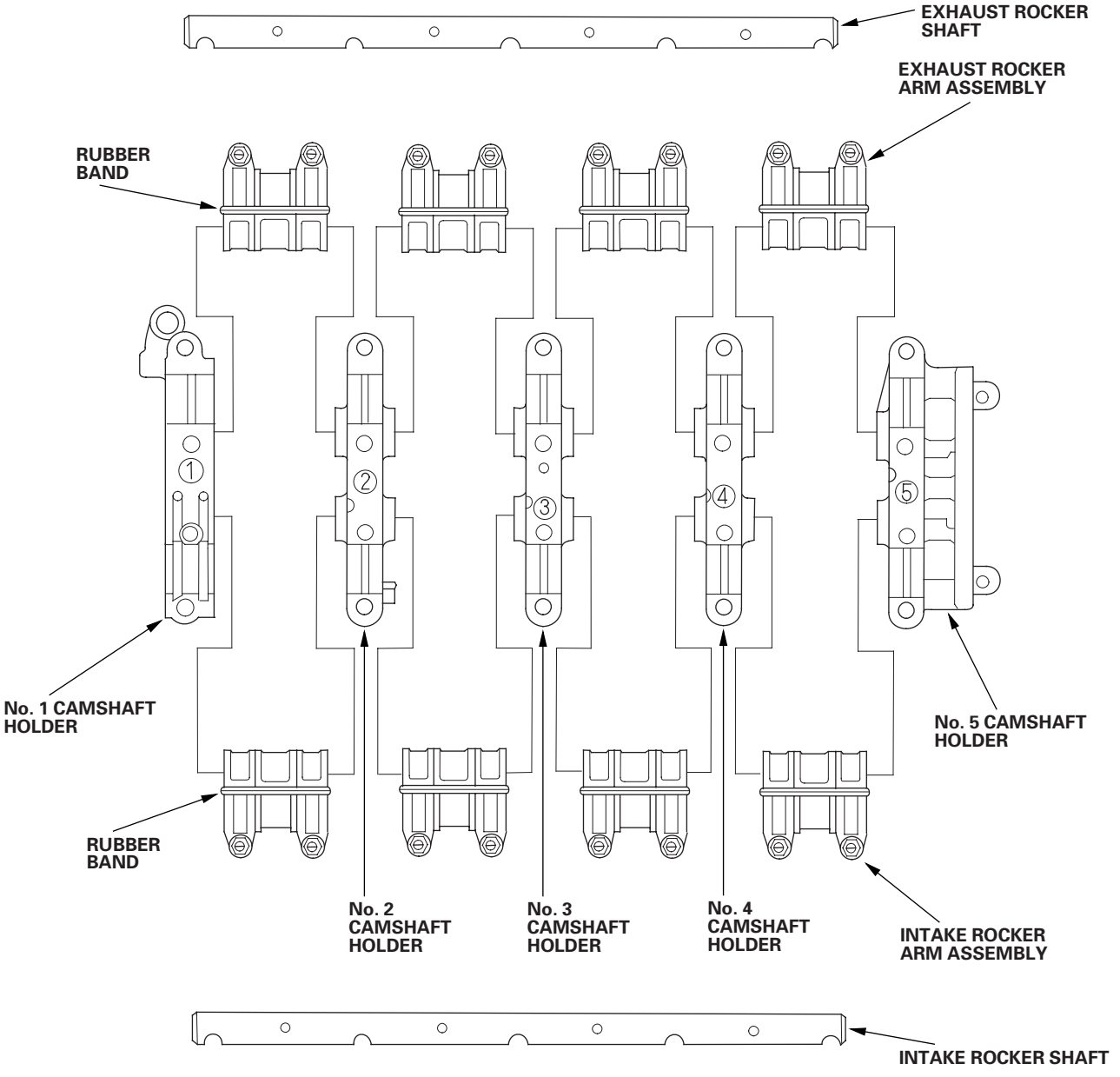

Rocker Arm and Shaft Inspection

1. Remove the rocker arm assembly (see page 6-35), then disassemble the rocker arm assembly (see page 6-36).

2. Measure the diameter of the shaft at the first rocker location.

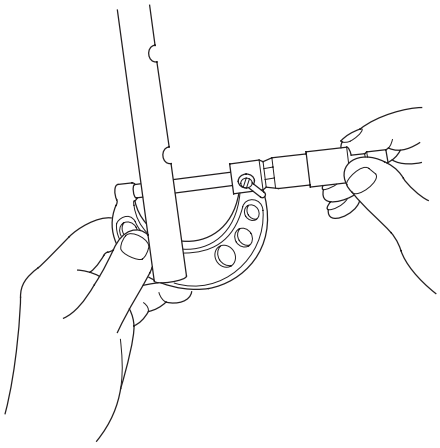

3. Zero the gauge (A) to the shaft diameter.

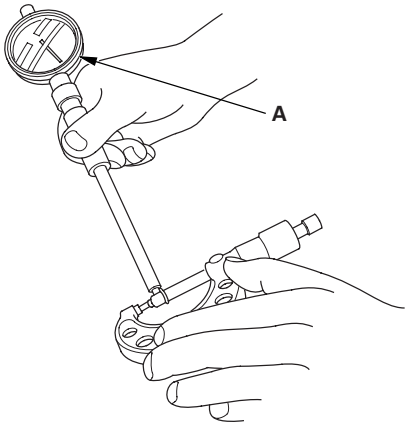

4. Measure the inside diameter of the rocker arm, and check it for an out-of-round condition.

Rocker Arm-to-Shaft Clearance
K20A3 Engine:
Standard (New):
Intake: 0.025—0.052 mm (0.0010—0.0020 in.)
Exhaust: 0.018—0.056 mm (0.0007—0.0022 in.)
Service Limit: 0.08 mm (0.003 in.)
K20A2, K20Z1 Engines:
Standard (New): 0.025—0.052 mm (0.0010—0.0020 in.)
Service Limit: 0.08 mm (0.03 in.)

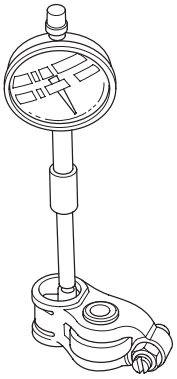

5. Repeat for all rocker arms and both shafts. If the clearance is over the limit, replace the rocker shaft and all overtolerance rocker arms. If any VTEC rocker arm needs replacement, replace rocker arms (primary and secondary, or primary, mid, and secondary) as a set.

(cont'd)

Rocker Arm and Shaft Inspection (cont'd)

6. Inspect the rocker arm pistons (A). Push each piston manually. If it does not move smoothly, replace the rocker arm set.

   NOTE: Apply new engine oil to the pistons when reassembling.

   K20A3 engine:

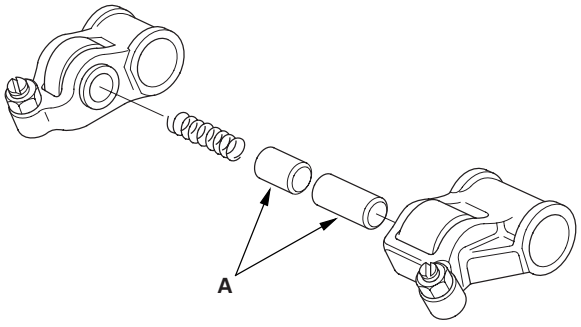

   K20A2, K20Z1 engines:

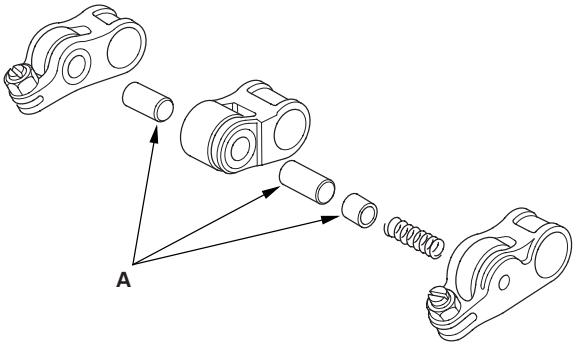

7. Install the rocker arm assembly (see page 6-50).

Camshaft Inspection

NOTE: Do not rotate the camshaft during inspection.

1. Remove the rocker arm assembly (see page 6-35).

2. Put the rocker shaft holders, camshaft and camshaft holders on the cylinder head, then tighten the bolts to the specified torque.

   NOTE: If the engine does not have bolt ㉑, skip it and continue the torque sequence.

   Specified Torque
   8 mm Bolts: 22 N·m (2.2 kgf·m, 16 lbf·ft)
   6 mm Bolts: 12 N·m (1.2 kgf·m, 8.7 lbf·ft)
   6 mm Bolts: ㉑, ㉒, ㉓

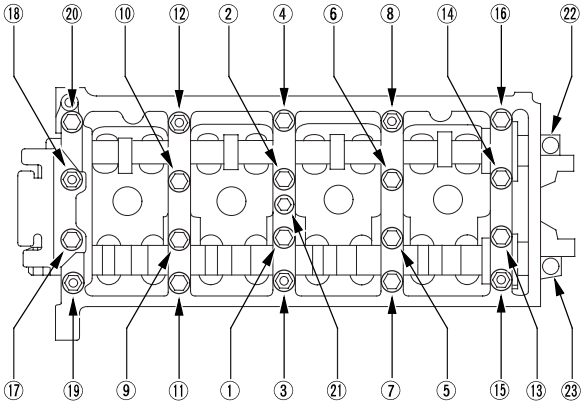

3. Seat the camshaft by pushing it away from the camshaft pulley end of the cylinder head.

4. Zero the dial indicator against the end of the camshaft, then push the camshaft back and forth and read the end play. If the end play is beyond the service limit, replace the cylinder head and recheck. If it is still beyond the service limit, replace the camshaft.

Camshaft End Play
Standard (New): 0.05—0.20 mm (0.002—0.008 in.)
Service Limit: 0.4 mm (0.02 in.)

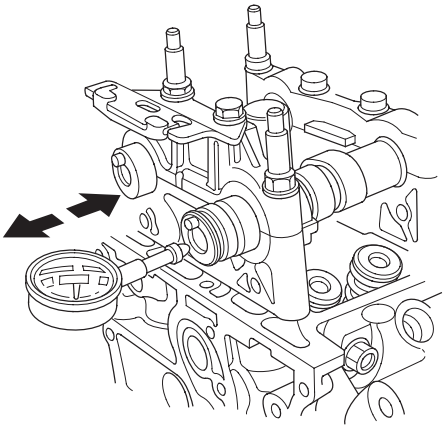

5. Unscrew the camshaft holder bolts two turns at a time, in a crisscross pattern. Then remove the camshaft holders from the cylinder head.

6. Lift the camshafts out of the cylinder head, wipe them clean, then inspect the lift ramps. Replace the camshaft if any lobes are pitted, scored, or excessively worn.

7. Clean the camshaft journal surfaces in the cylinder head, then set the camshafts back in place. Place a plastigage strip across each journal.

8. Install the camshaft holders, then tighten the bolts to the specified torque as shown in step 2.

9. Remove the camshaft holders. Measure the widest part of plastigage on each journal.

   - If the camshaft-to-holder clearance is within limits, go to step 11.
   - If the camshaft-to-holder clearance is beyond the service limit and the camshaft has been replaced, replace the cylinder head.
   - If the camshaft-to-holder clearance is beyond the service limit and the camshaft has not been replaced, go to step 10.

Camshaft-to-Holder Oil Clearance
Standard (New):
No. 1 Journal: 0.030—0.069 mm (0.001—0.003 in.)
No. 2, 3, 4, 5 Journals: 0.060—0.099 mm (0.002—0.004 in.)
Service Limit: 0.15 mm (0.006 in.)

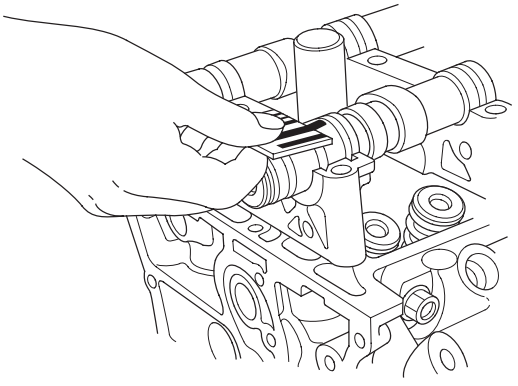

(cont'd)

Camshaft Inspection (cont'd)

10. Check the total runout with the camshaft supported on V-blocks.

    - If the total runout of the camshaft is within the service limit, replace the cylinder head.
    - If the total runout is beyond the service limit, replace the camshaft and recheck the camshaft-to-holder oil clearance. If the oil clearance is still beyond the service limit, replace the cylinder head.

    Camshaft Total Runout
    Standard (New): 0.03 mm (0.001 in.) max.
    Service Limit: 0.04 mm (0.002 in.)

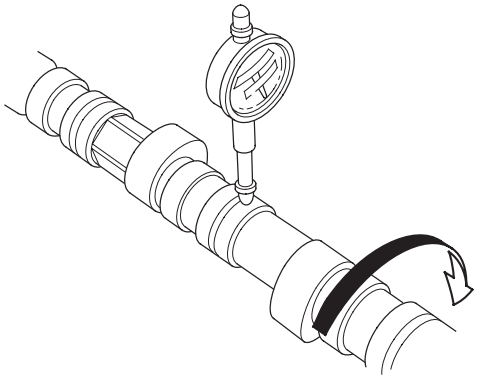

11. Measure cam lobe height.

Cam Lobe Height Standard (New):

		INTAKE	EXHAUST
K20A3 engine	PRI	33.925 mm (1.3356 in.)	34.092 mm (1.3422 in.)
	SEC	29.638 mm (1.1668 in.)	
K20A2, K20Z1 engines	PRI	32.791 mm (1.2910 in.)	32.772 mm (1.2902 in.)
	MID	35.534 mm (1.3990 in.)	34.768 mm (1.3688 in.)
	SEC	32.678 mm (1.2865 in.)	32.661 mm (1.2859 in.)

PRI: Primary MID: Mid
SEC: Secondary C/C: Cam Chain

K20A3 engine:

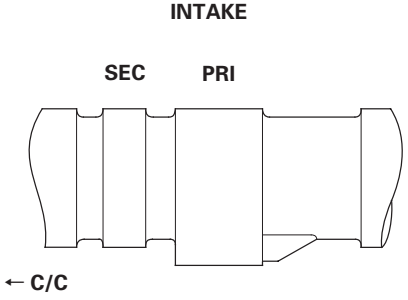

K20A2, K20Z1 engines:

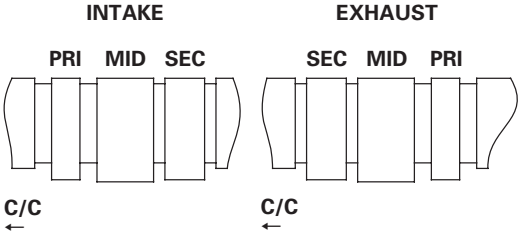

Valve, Spring, and Valve Seal Removal

Special Tools Required
Valve spring compressor attachment 07757-PJ1010A

Identify the valves and valve springs as they are removed so that each item can be reinstalled in its original position.

1. Remove the cylinder head (see page 6-31).

2. Using an appropriate-sized socket (A) and plastic mallet (B), lightly tap the valve retainer to loosen the valve cotters.

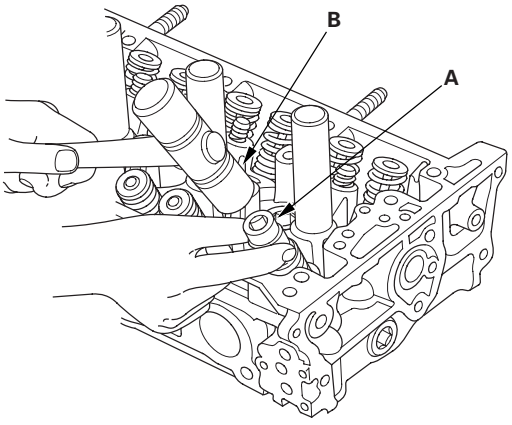

3. Install the valve spring compressor attachment and valve spring compressor. Compress the spring and remove the valve cotters.

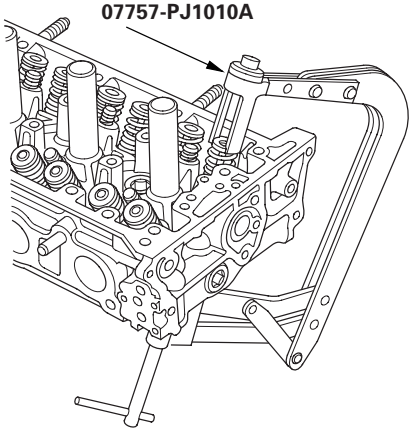

4. Remove the valve spring compressor, valve spring compressor attachment, spring retainer, and spring.

5. Install the valve guide seal remover.

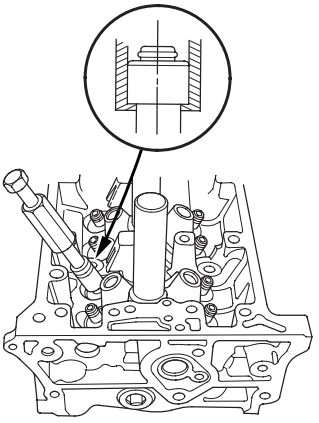

6. Remove the valve seal.

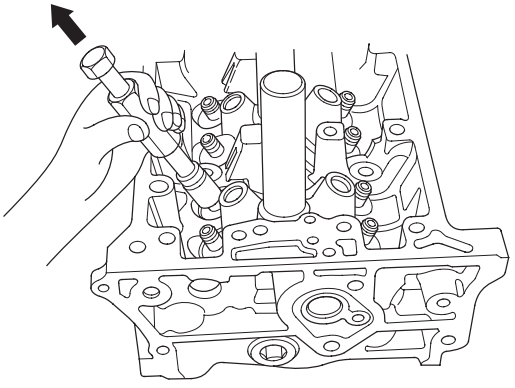

7. Remove the valve spring seat and valve.

Valve Inspection

1. Remove the valves (see page 6-43).

2. Measure the valve in these areas.

K20A3 Engine
Intake Valve Dimensions:
A Standard (New): 34.85—35.15 mm (1.372—1.384 in.)
B Standard (New): 108.7—109.5 mm (4.280—4.311 in.)
C Standard (New): 5.475—5.485 mm (0.2156—0.2159 in.)
C Service Limit: 5.445 mm (0.214 in.)
Exhaust Valve Dimensions:
A Standard (New): 29.85—30.15 mm (1.175—1.187 in.)
B Standard (New): 108.3—109.1 mm (4.264—4.295 in.)
C Standard (New): 5.450—5.460 mm (0.2146—0.2150 in.)
C Service Limit: 5.42 mm (0.213 in.)

K20A2, K20Z1 Engines
Intake Valve Dimensions:
A Standard (New): 34.85—35.15 mm (1.372—1.384 in.)
B Standard (New): 108.8—109.4 mm (4.283—4.307 in.)
C Standard (New): 5.475—5.485 mm (0.2156—0.2159 in.)
C Service Limit: 5.445 mm (0.214 in.)
Exhaust Valve Dimensions:
A Standard (New): 29.85—30.15 mm (1.175—1.187 in.)
B Standard (New): 108.4—109.0 mm (4.268—4.291 in.)
C Standard (New): 5.450—5.460 mm (0.2146—0.2150 in.)
C Service Limit: 5.42 mm (0.213 in.)

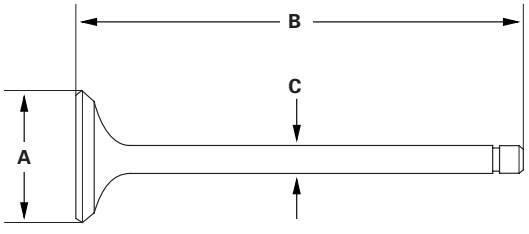

Valve Stem-to-Guide Clearance Inspection

1. Remove the valves (see page 6-43).

2. Slide the valve out of its guide about 10 mm (0.39 in.), then measure the guide-to-stem clearance with a dial indicator while rocking the stem in the direction of normal thrust (wobble method).

   - If the measurement exceeds the service limit, recheck it using a new valve.
   - If the measurement is now within the service limit, reassemble using a new valve.
   - If the measurement with a new valve still exceeds the service limit, go to step 3.

Intake Valve Stem-to-Guide Clearance
Standard (New): 0.06—0.11 mm (0.002—0.004 in.)
Service Limit: 0.16 mm (0.006 in.)

Exhaust Valve Stem-to-Guide Clearance
Standard (New): 0.11—0.16 mm (0.004—0.006 in.)
Service Limit: 0.22 mm (0.009 in.)

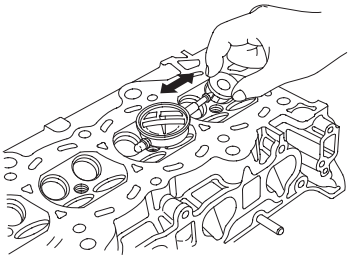

3. Subtract the O.D. of the valve stem, measured with a micrometer, from the I.D. of the valve guide, measured with an inside micrometer or ball gauge. Take the measurements in three places along the valve stem and three places inside the valve guide. The difference between the largest guide measurement and the smallest stem measurement should not exceed the service limit.

Intake Valve Stem-to-Guide Clearance
Standard (New): 0.030—0.055 mm (0.0012—0.0022 in.)
Service Limit: 0.08 mm (0.003 in.)

Exhaust Valve Stem-to-Guide Clearance
Standard (New): 0.055—0.080 mm (0.0022—0.0031 in.)
Service Limit: 0.11 mm (0.004 in.)

Valve Guide Replacement

Special Tools Required
- Valve guide driver, 5.5 mm 07742-0010100
- Valve guide reamer, 5.5 mm 07HAH-PJ7A100

1. Inspect valve stem-to-guide clearance (see page 6-44).

2. As illustrated, use a commercially available air-impact valve guide driver (A) modified to fit the diameter of the valve guides. In most cases, the same procedure can be done using the special tool and a conventional hammer.

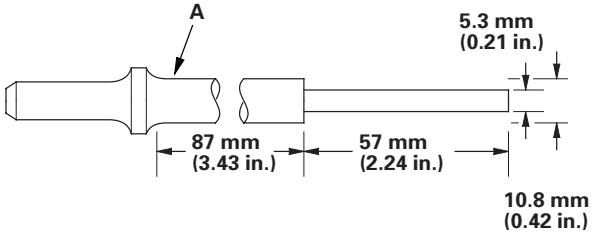

3. Select the proper replacement guides, and chill them in the freezer section of a refrigerator for about an hour.

4. Use a hot plate or oven to evenly heat the cylinder head to 300 °F (150 °C). Monitor the temperature with a cooking thermometer. Do not get the head hotter than 300 °F (150 °C); excessive heat may loosen the valve seats.

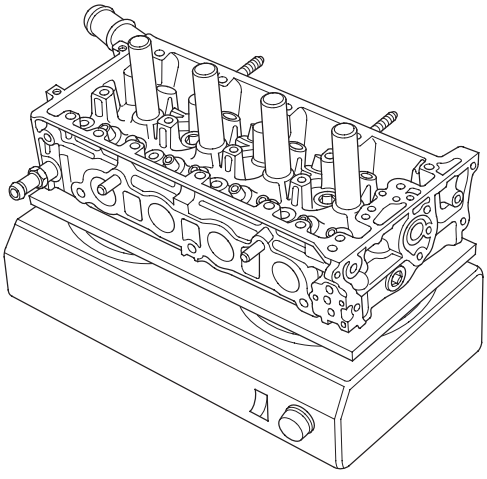

5. Working from the camshaft side, use the driver and an air hammer to drive the guide about 2 mm (0.1 in.) towards the combustion chamber. This will knock off some of the carbon and make removal easier. Hold the air hammer directly in line with the valve guide to prevent damaging the driver. Wear safety goggles or a face shield.

6. Turn the head over, and drive the guide out toward the camshaft side of the head.

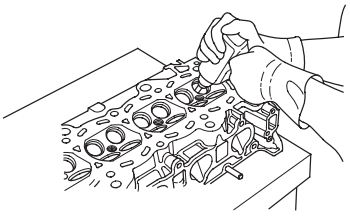

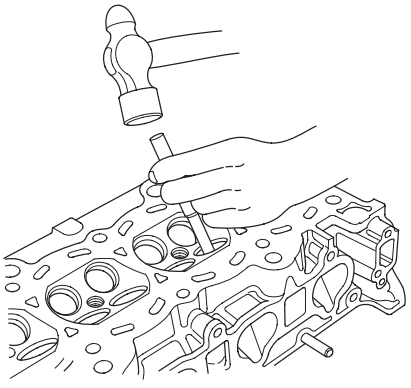

7. If a valve guide won't move, drill it out with a 8 mm (5/16 inch) bit, then try again. Drill guides only in extreme cases; you could damage the cylinder head if the guide breaks.

8. Take out the new guide(s) from the freezer, one at a time, as you need them.

(cont'd)

Valve Guide Replacement (cont'd)

9. Apply a thin coat of new engine oil to the outside of the new valve guide. Install the guide from the camshaft side of the head; use the special tool to drive the guide in to the specified installed height (A) of the guide (B). If you have all 16 guides to do, you may have to reheat the head.

   Valve Guide Installed Height
   Intake: 15.2—16.2 mm (0.598—0.638 in.)
   Exhaust: 15.5—16.5 mm (0.610—0.650 in.)

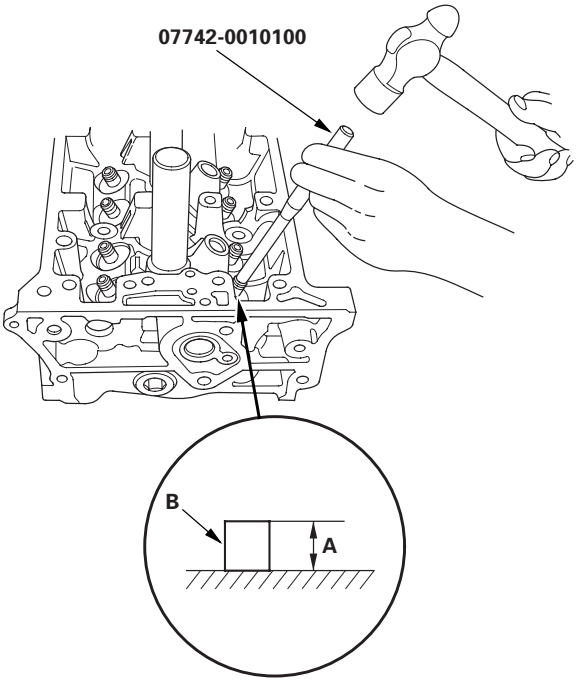

10. Coat both reamer and valve guide with cutting oil.

11. Rotate the reamer clockwise the full length of the valve guide bore.

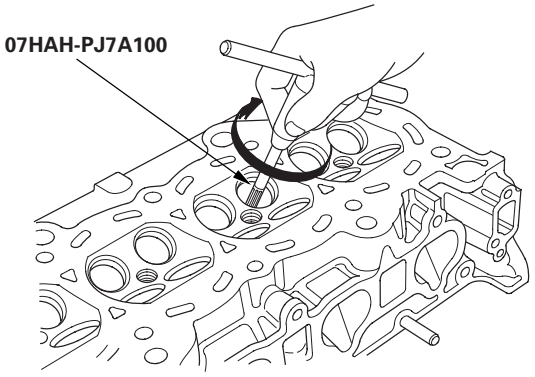

12. Continue to rotate the reamer clockwise while removing it from the bore.

13. Thoroughly wash the guide in detergent and water to remove any cutting residue.

14. Check the clearances with a valve (see page 6-44). Verify that a valve slides in the intake and exhaust valve guides without exerting pressure.

15. Inspect the valve seating, if necessary renew the valve seat using a valve seat cutter (see page 6-47).

Valve Seat Reconditioning

1. Inspect valve stem-to-guide clearance (see page 6-44). If the valve guides are worn, replace them (see page 6-45) before cutting the valve seats.

2. Renew the valve seats in the cylinder head using a valve seat cutter.

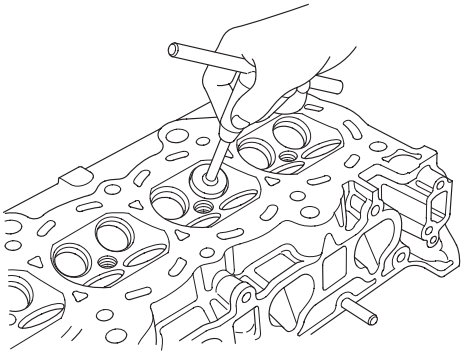

3. Carefully cut a 45 ° seat, removing only enough material to ensure a smooth and concentric seat.

4. Bevel the upper and lower edges at the angles shown in the illustration.
   Check the width of the seat and adjust accordingly.

   K20A3 engine:

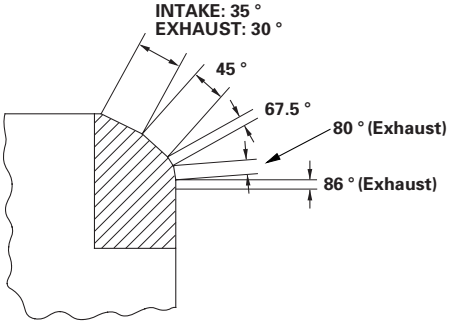

   K20A2, K20Z1 engines:

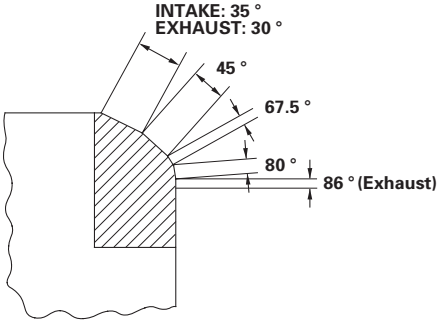

5. Make one more very light pass with the 45 ° cutter to remove any possible burrs caused by the other cutters.

   Valve Seat Width
   Standard (New): 1.25—1.55 mm (0.049—0.061 in.)
   Service Limit: 2.00 mm (0.079 in.)

6. After resurfacing the seat, inspect for even valve seating. Apply Prussian Blue compound (A) to the valve face. Insert the valve in its original location in the head, then lift it and snap it closed against the seat several times.

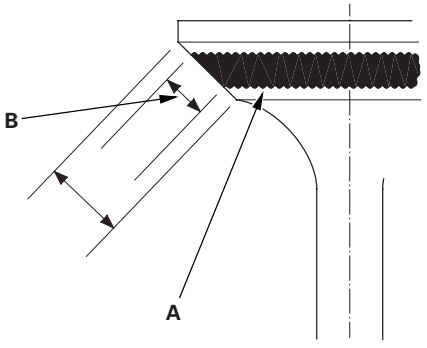

7. The actual valve seating surface (B), as shown by the blue compound, should be centered on the seat.

   - If it is too high (closer to the valve stem), you must make a second cut with the 67.5 ° cutter to move it down, then one more cut with the 45 ° cutter to restore seat width.
   - If it is too low (close to the valve edge), you must make a second cut with the 35 ° cutter (intake side) or the 30 ° cutter (exhaust side) to move it up, then make one more cut with the 45 ° cutter to restore seat width.

   NOTE: The final cut should always be made with the 45 ° cutter.

(cont'd)

Valve Seat Reconditioning (cont'd)

8. Insert the intake and exhaust valves in the head, and measure valve stem installed height (A).

   Intake Valve Stem Installed Height
   Standard (New): 44.0—44.5 mm (1.73—1.75 in.)
   Service Limit: 44.7 mm (1.76 in.)

   Exhaust Valve Stem Installed Height
   Standard (New): 44.1—44.6 mm (1.74—1.76 in.)
   Service Limit: 44.8 mm (1.76 in.)

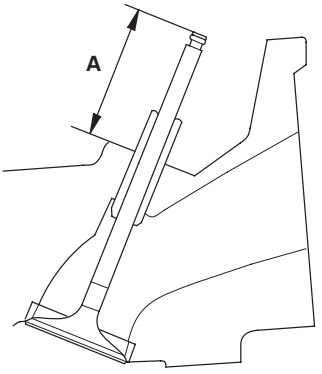

9. If valve stem installed height is over the service limit, replace the valve and recheck. If it is still over the service limit, replace the cylinder head; the valve seat in the head is too deep.

Valve, Spring, and Valve Seal Installation

Special Tools Required
- Stem seal driver 07PAD-0010000
- Valve spring compressor attachment 07757-PJ1010A

1. Coat the valve stems with engine oil. Install the valves in the valve guides.

2. Check that the valves move up and down smoothly.

3. Install the spring seats on the cylinder head.

4. Install the new valve seals (A) using the stem seal driver (B).

   NOTE: The exhaust valve seal (C) has a black spring (D), and the intake valve seal (E) has a white spring (F). They are not interchangeable.

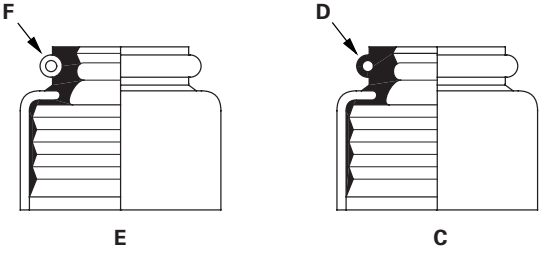

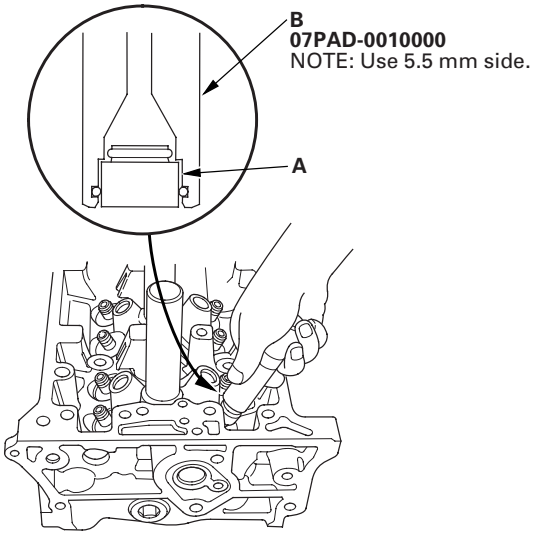

5. Install the valve spring(s) (the 2002 model K20A2 engine has inner and outer valve springs). Place the end of the valve spring with closely wound coils toward the cylinder head.

6. Install the valve retainer.

7. Install the valve spring compressor. Compress the spring, and install the valve cotters.

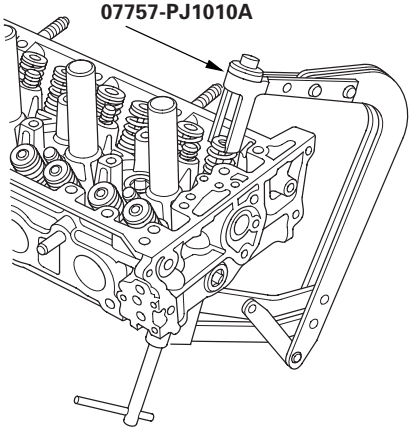

8. Lightly tap the end of each valve stem two or three times with a plastic mallet (A) to ensure proper seating of the valve and valve cotters. Tap the valve stem only along its axis so you do not bend the stem.

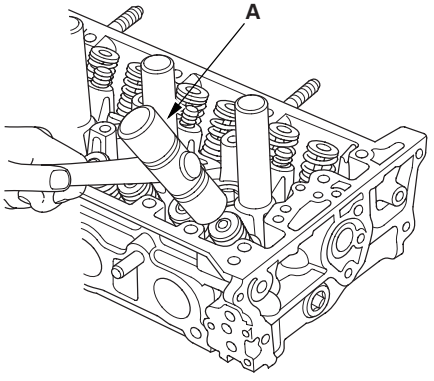

Rocker Arm Assembly Installation

1. Reassemble the rocker arm assembly (see page 6-36).

2. Clean and dry the No. 5 rocker shaft holder mating surface.

3. Apply liquid gasket, P/N 08717-0004, 08718-0001, 08718-0002, 08718-0003, or 08718-0009 evenly to the cylinder head mating surface of the No. 5 rocker shaft holder.

   NOTE: Do not install components if too much time has passed after applying the liquid gasket (for P/N 08718-0002, no more than 4 minutes, for all others, no more than 5 minutes). Instead, remove the old residue and reapply the liquid gasket.

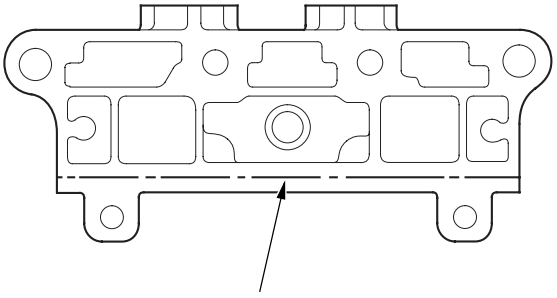

4. Insert the bolts (A) into the rocker shaft holder, then install the rocker arm assembly (B) on the cylinder head.

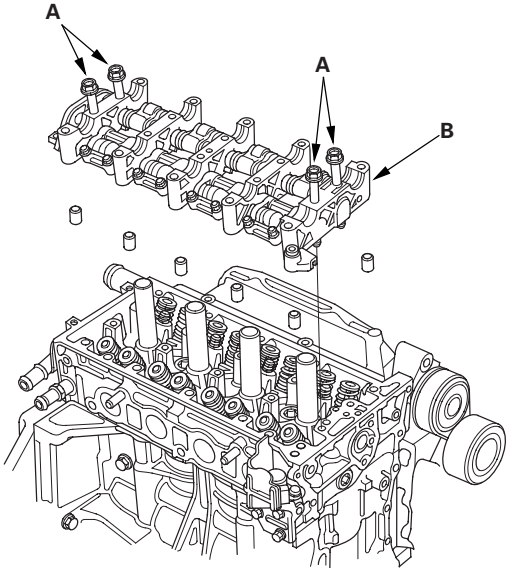

5. Remove the bolts from the rocker shaft holder.

6. Punch marks on the VTC actuator and exhaust camshaft sprocket are facing up, then set the camshafts (A) in the holder.

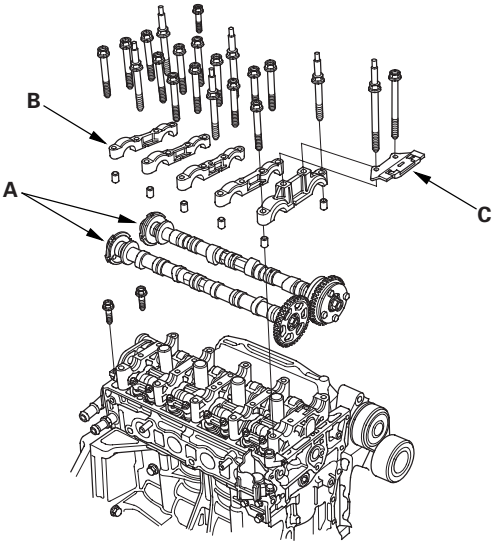

7. Set the camshaft holders (B) and cam chain guide B (C) in place.

8. Tighten the bolts to the specified torque.

   NOTE: If the engine does not have bolt ㉑, skip it and continue the torque sequence.

   Specified Torque:
   8 mm Bolts: 22 N·m (2.2 kgf·m, 16 lbf·ft)
   6 mm Bolts: 12 N·m (1.2 kgf·m, 8.7 lbf·ft)
   6 mm Bolts: ㉑, ㉒, ㉓

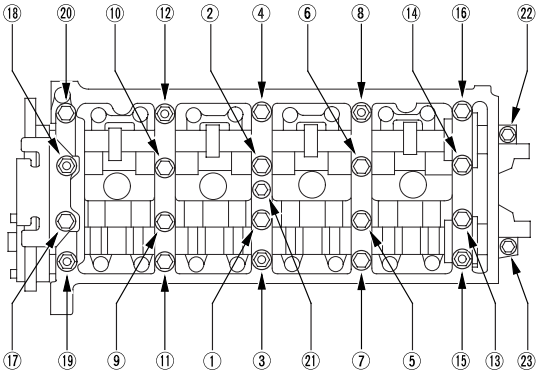

9. Install the cam chain (see page 6-17), and adjust the valve clearance (see page 6-11).

Cylinder Head Installation

Install the cylinder head in the reverse order of removal:

1. Clean the cylinder head and block surface.

2. Install the new cylinder head gasket (A) and dowel pins (B) on the engine block. Always use a new cylinder head gasket.

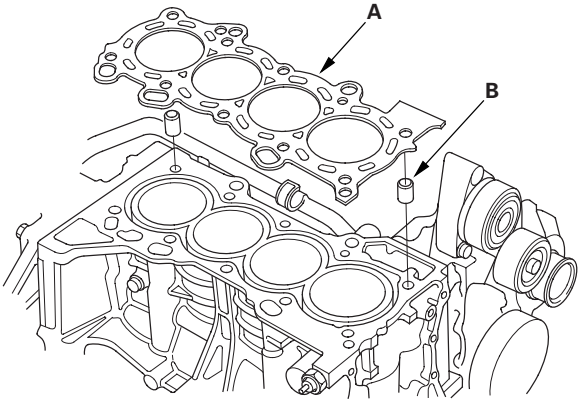

3. Set the crankshaft to top dead center (TDC). Align the TDC mark (A) on the crankshaft sprocket with the pointer (B) on the engine block.

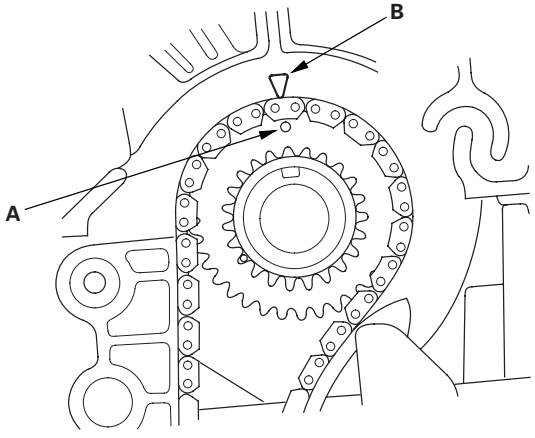

4. Install the cylinder head on the block.

5. Measure the diameter of each cylinder head bolt at point A and point B.

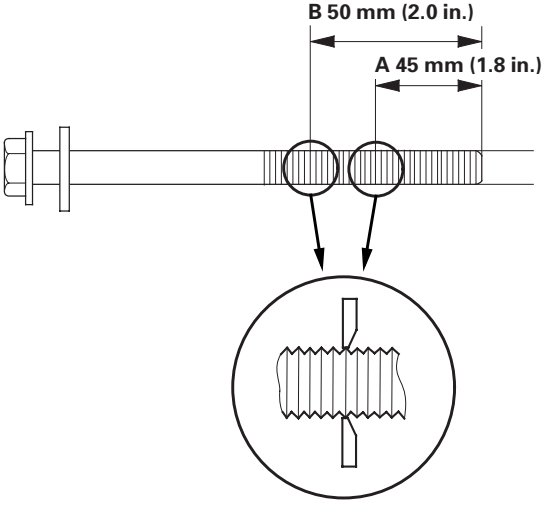

6. If either diameter is less than 10.6 mm (0.42 in.), replace the cylinder head bolt.

7. Apply new engine oil to the bolt threads and flange of all the cylinder head bolts.

8. Tighten the cylinder head bolts in sequence to 39 N·m (4.0 kgf·m, 29 lbf·ft). Use a beam-type torque wrench. When using a preset-type torque wrench, be sure to tighten slowly and do not overtighten. If a bolt makes any noise while you are torquing it, loosen the bolt and retighten it from the first step.

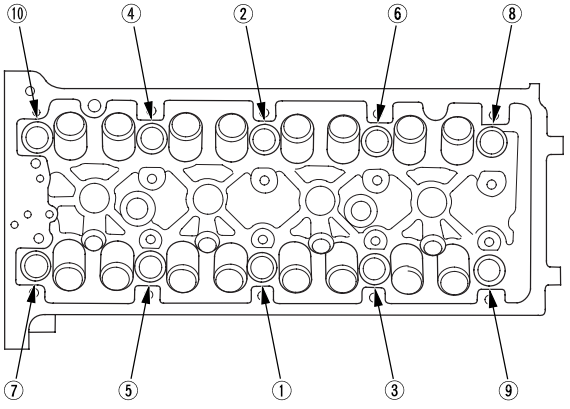

(cont'd)

Cylinder Head Installation (cont'd)

9. After torquing, tighten all cylinder head bolts in two steps (90 ° per step). If you are using a new cylinder head bolt, tighten the bolt an extra 90 °.

   NOTE: Remove the cylinder head bolt if you tightened it beyond the specified angle, and go back to step 5 of the procedure. Do not loosen it back to the specified angle.

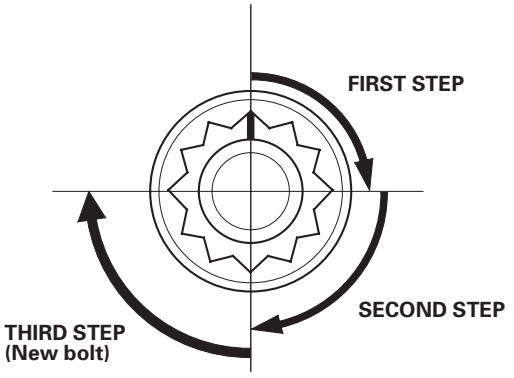

10. Install the rocker arm assembly (see page 6-50).

11. Install the water bypass hose (A).

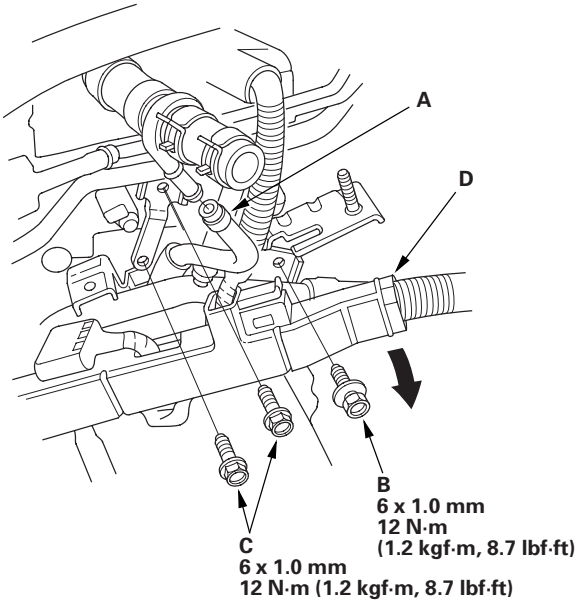

12. Tighten the connecting pipe mounting bolt (B) and water bypass line mounting bolts (C), then install the harness holder (D) on the bracket.

13. Install the upper radiator hose (A) and heater hose (B).

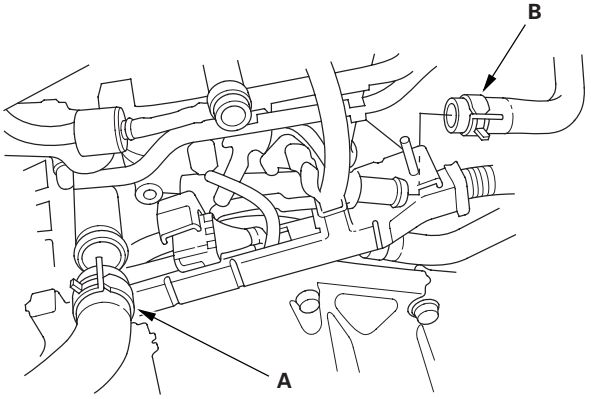

14. Install the water bypass hose.

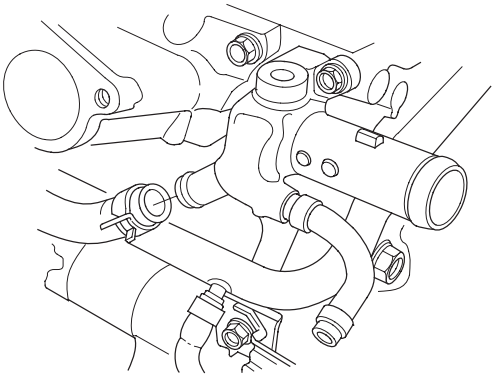

15. Install the intake manifold:

    - K20A3 engine (see page 9-5)
    - K20A2, K20Z1 engines (see page 9-11)

16. Install the exhaust manifold (see page 9-14).

17. Install the cam chain (see page 6-17).

18. K20A3 engine: Install the fuel feed hose (see page 11-370).

19. Adjust the valve clearance (see page 6-11).

20. Install the drive belt (see page 4-43).

21. Clean the battery posts and cable terminals with sandpaper, then assemble them and apply grease to prevent corrosion.

22. After installation, check that all tubes, hoses and connectors are installed correctly.

23. Inspect for fuel leaks. Turn the ignition switch ON (II) (do not operate the starter) so the fuel pump runs for about 2 seconds and pressurizes the fuel line. Repeat this operation two or three times, then check for fuel leakage at any point in the fuel line.

24. Refill the radiator with engine coolant, and bleed air from the cooling system with the heater valve open (see step 7 on page 10-7).

25. 2002-2004 models: Do the engine control module (ECM)/powertrain control module (PCM) idle learn procedure (see page 11-349).

26. 2005-2006 models: Do the crankshaft position (CKP) pattern clear/CKP pattern learn procedure (see page 11-5).

27. Do the power window control unit reset procedure (see page 22-148).

28. Inspect the idle speed (see page 11-348).

29. Inspect the ignition timing (see page 4-25).

30. Enter the anti-theft code for the radio, then enter the customer's audio presets.

31. Set the clock.

Engine Mechanical

Engine Block

Special Tools 7-2
Component Location Index 7-3
Connecting Rod and Crankshaft End Play Inspection 7-5
Crankshaft Main Bearing Replacement 7-6
Connecting Rod Bearing Replacement 7-8
Oil Pan Removal 7-11
Crankshaft and Piston Removal 7-13
Crankshaft Inspection 7-15
Block and Piston Inspection 7-16
Cylinder Bore Honing 7-18
Piston, Pin, and Connecting Rod Replacement 7-19
Piston Ring Replacement 7-22
Piston Installation 7-24
Connecting Rod Bolt Inspection 7-25
Crankshaft Installation 7-26
Oil Pan Installation 7-29
Transmission End Crankshaft Oil Seal Installation - In Car 7-32

Special Tools

Ref. No.	Tool Number	Description	Qty
①	07ZAD-PNAA100	Oil Seal Driver Attachment, 96 mm	1
②	07746-0010700	Attachment, 24 x 26 mm	1
③	07749-0010000	Driver	1

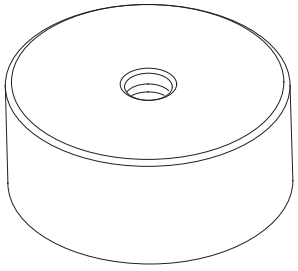

①

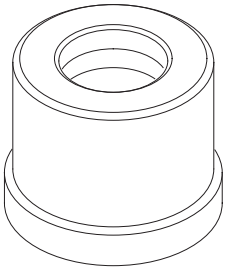

②

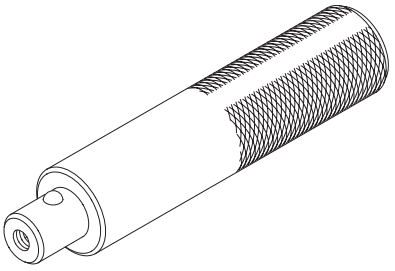

③

Component Location Index

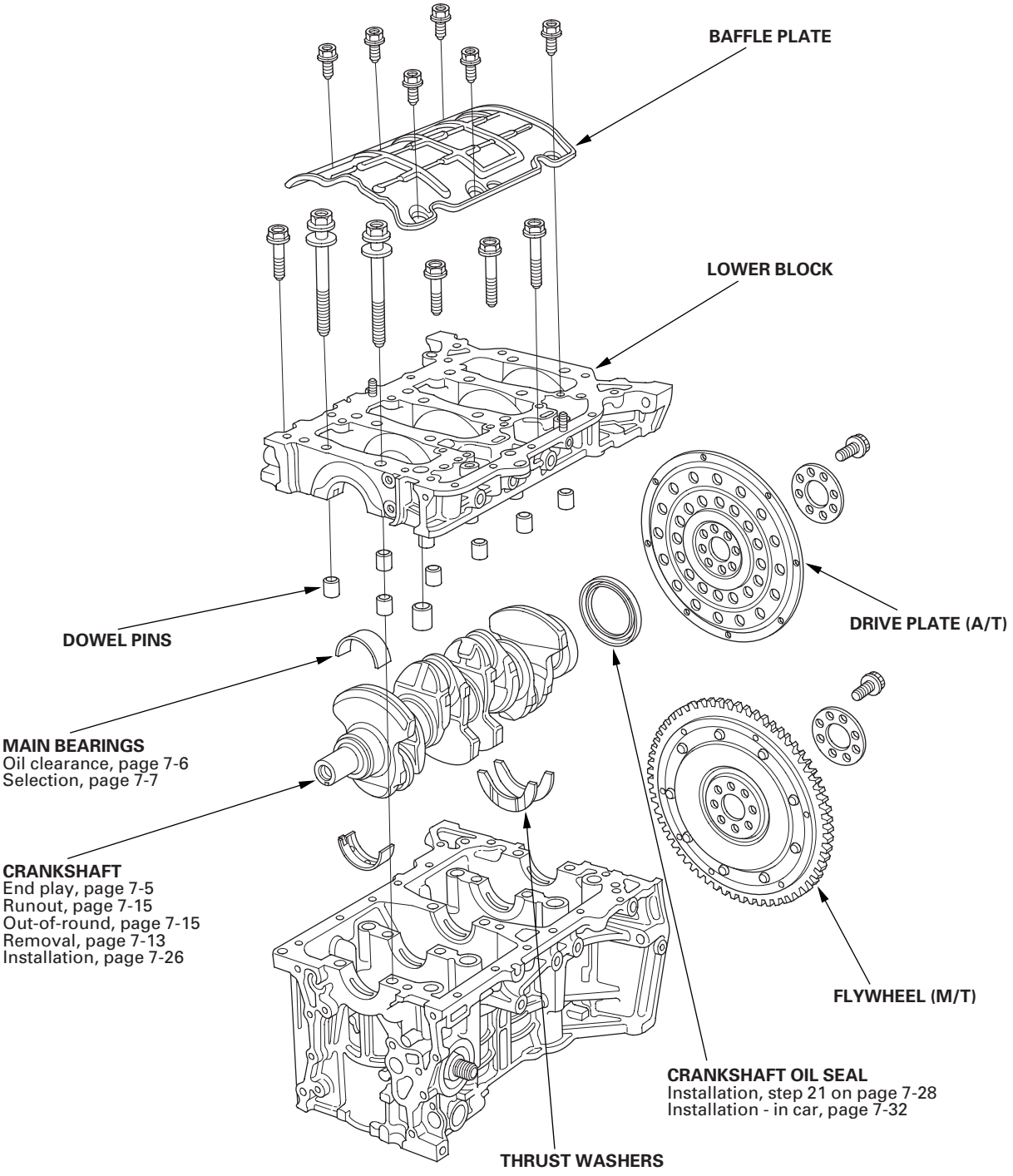

(cont'd)

Component Location Index (cont'd)

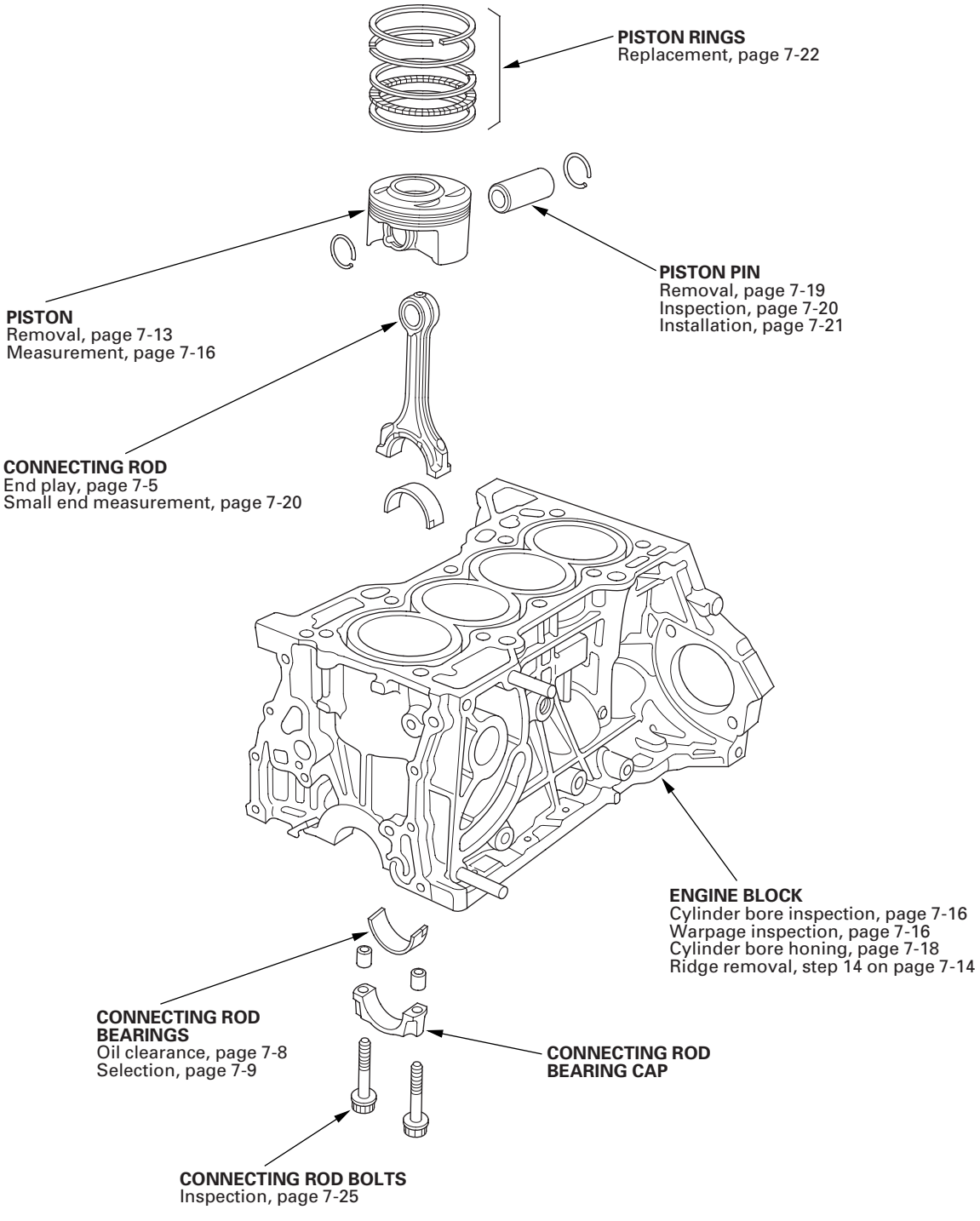

Connecting Rod and Crankshaft End Play Inspection

1. Remove the oil pump (see page 8-13).

2. Remove the baffle plate (see step 7 on page 7-13).

3. Measure the connecting rod end play with a feeler gauge between the connecting rod and crankshaft.

   Connecting Rod End Play
   Standard (New): 0.15—0.30 mm (0.006—0.012 in.)
   Service Limit: 0.40 mm (0.016 in.)

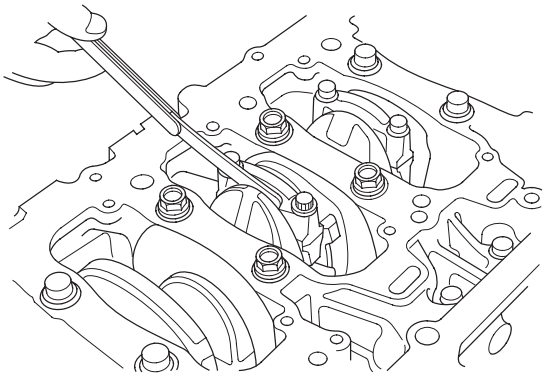

4. If the connecting rod end play is out-of-tolerance, install a new connecting rod, and recheck. If it is still out-of-tolerance; replace the crankshaft (see step 8 on page 7-13).

5. Push the crankshaft firmly away from the dial indicator, and zero the dial against the end of the crankshaft. Then pull the crankshaft firmly back toward the indicator; the dial reading should not exceed the service limit.

   Crankshaft End Play
   Standard (New): 0.10—0.35 mm (0.004—0.014 in.)
   Service Limit: 0.45 mm (0.018 in.)

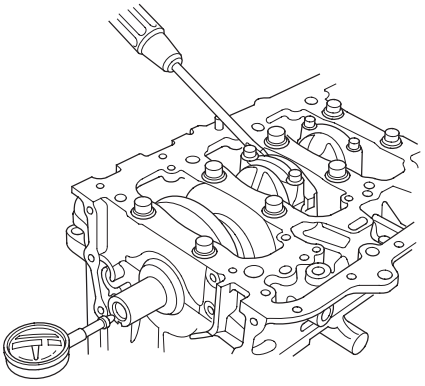

6. If the end play is out-of-tolerance, replace the thrust washers and recheck. If it is still out-of-tolerance, replace the crankshaft (see step 8 on page 7-13).

Crankshaft Main Bearing Replacement

Main Bearing Clearance Inspection

1. To check main bearing-to-journal oil clearance, remove the lower block and bearing half (see page 7-13).

2. Clean each main journal and bearing half with a clean shop towel.

3. Place one strip of plastigage across each main journal.

4. Reinstall the bearing half and lower block, then torque the bolts to 29 N·m (3.0 kgf·m, 22 lbf·ft) + 56 °.

   NOTE: Do not rotate the crankshaft during inspection.

5. Remove the lower block and bearing half again, and measure the widest part of the plastigage.

   Main Bearing-to-Journal Oil Clearance
   No. 1, 2, 4, 5 Journals:
   Standard (New): 0.017 — 0.041 mm (0.0007 — 0.0016 in.)
   Service Limit: 0.050 mm (0.0020 in.)
   No. 3 Journal:
   Standard (New): 0.025 — 0.049 mm (0.0010 — 0.0019 in.)
   Service Limit: 0.055 mm (0.0022 in.)

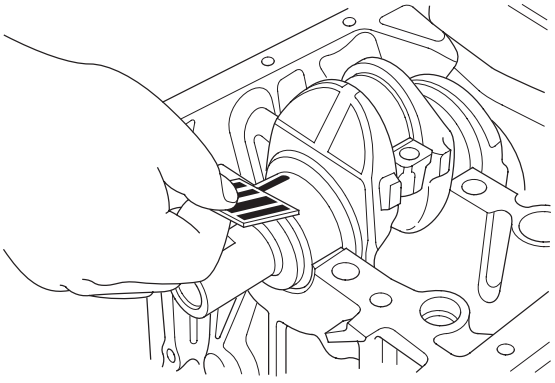

6. If the plastigage measures too wide or too narrow, remove the crankshaft, and remove the upper half of the bearing. Install a new, complete bearing with the same color code(s), and recheck the clearance. Do not file, shim, or scrape the bearings or the caps to adjust clearance.

7. If the plastigage shows the clearance is still incorrect, try the next larger or smaller bearing (the color listed above or below that one), and check again. If the proper clearance cannot be obtained by using the appropriate larger or smaller bearings, replace the crankshaft and start over.

Main Bearing Selection

Crankshaft Bore Code Location

1. Numbers or letters or bars have been stamped on the end of the block as a code for the size of each of the five main journal bores. Write down the crank bore codes.
   If you can't read the codes because of accumulated dirt and dust, do not scrub them with a wire brush or scraper. Clean them only with solvent or detergent.

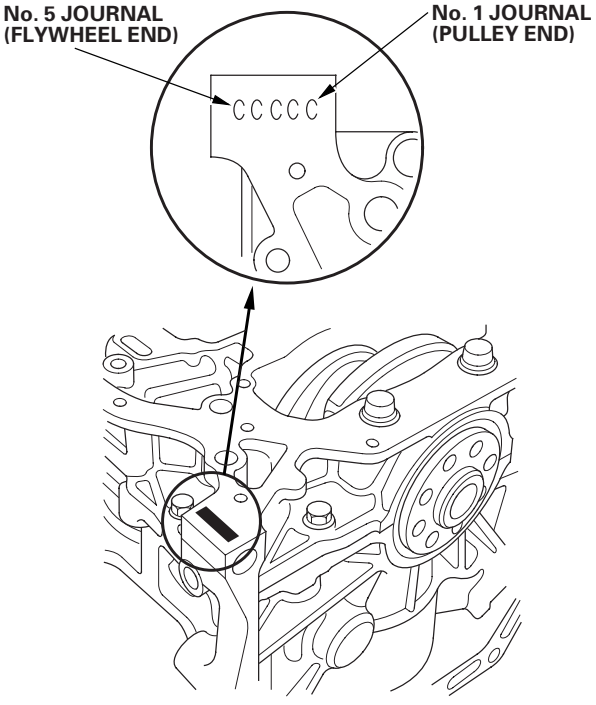

Main Journal Code Location

2. The main journal codes are stamped on the crankshaft.

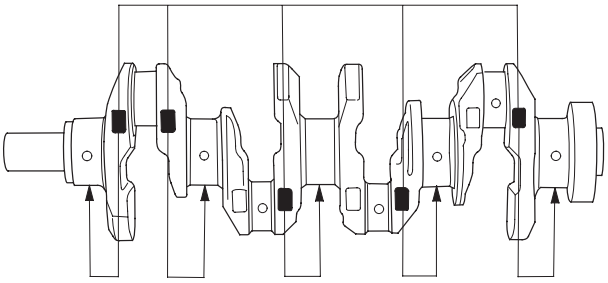

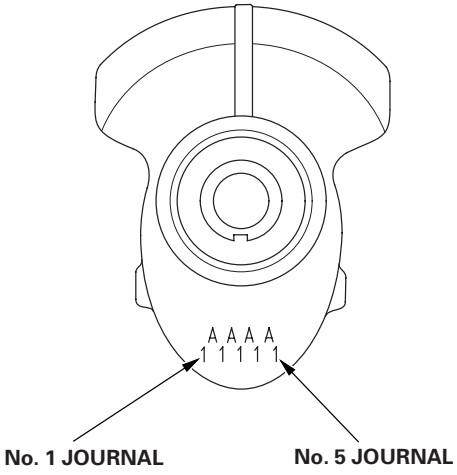

(cont'd)

Crankshaft Main Bearing Replacement (cont'd)

3. Use the crank bore codes and crank journal codes to select the appropriate replacement bearings from the following table.

   NOTE:
   - Color code is on the edge of the bearing.
   - When using bearing halves of different colors, it does not matter which color is used in the top or bottom.

Larger crank bore →

Main journal code ↓ / Crank bore code →	1 or A or I	2 or B or II	3 or C or III	4 or D or IIII
1	Pink	Pink/ Yellow	Yellow	Green
2	Pink/ Yellow	Yellow	Green	Green/ Brown
3	Yellow	Green	Green/ Brown	Brown
4	Green	Green/ Brown	Brown	Black
5	Green/ Brown	Brown	Black	Black/ Blue
6	Brown	Black	Black/ Blue	Blue

→ Smaller bearing (Thicker)

Smaller main journal ↓ / Smaller bearing (Thicker) ↓

Connecting Rod Bearing Replacement

Rod Bearing Clearance Inspection

1. Remove the oil pump (see page 8-13).
2. Remove the baffle plate (see step 7 on page 7-13).
3. Remove the connecting rod cap and bearing half.
4. Clean the crankshaft rod journal and bearing half with a clean shop towel.
5. Place plastigage across the rod journal.
6. Reinstall the bearing half and cap, and torque the bolts.

   Tightening Torque
   K20A3 Engine: 20 N·m (2.0 kgf·m, 14 lbf·ft) + 90 °
   K20A2, K20Z1 Engines: 29 N·m (3.0 kgf·m, 22 lbf·ft) + 90 °

   NOTE: Do not rotate the crankshaft during inspection.

7. Remove the rod cap and bearing half, and measure the widest part of the plastigage.

   Connecting Rod Bearing-to-Journal Oil Clearance
   K20A3 Engine:
   Standard (New): 0.020—0.050 mm (0.0008—0.0020 in.)
   Service Limit: 0.060 mm (0.0024 in.)
   K20A2, K20Z1 Engines:
   Standard (New): 0.033—0.061 mm (0.0013—0.0024 in.)
   Service Limit: 0.072 mm (0.0028 in.)

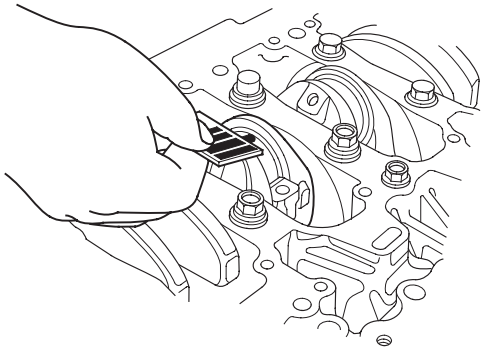

8. If the plastigage measures too wide or too narrow, remove the upper half of the bearing, install a new, complete bearing with the same color code(s), and recheck the clearance. Do not file, shim, or scrape the bearings or the caps to adjust clearance.

9. If the plastigage shows the clearance is still incorrect, try the next larger or smaller bearing (the color listed above or below that one), and check clearance again. If the proper clearance cannot be obtained by using the appropriate larger or smaller bearing, replace the crankshaft and start over.

Rod Bearing Selection

1. Inspect each connecting rod for cracks and heat damage.

Connecting Rod Big End Bore Code Locations

2. Each rod has a tolerance range from 0 to 0.024 mm (0.0009 in.), in 0.006 mm (0.0002 in.) increments, depending on the size of its big end bore. It's then stamped with a number or bar (1, 2, 3 or 4/I, II, III, or IIII) indicating the range. You may find any combination of numbers and bars in any engine, (Half the number or bar is stamped on the bearing cap, the other half on the rod).

   If you can't read the code because of an accumulation of oil and varnish, do not scrub it with a wire brush or scraper. Clean it only with solvent or detergent.

   Normal Bore Size
   K20A3 Engine: 48.0 mm (1.89 in.)
   K20A2, K20Z1 Engines: 51.0 mm (2.01 in.)

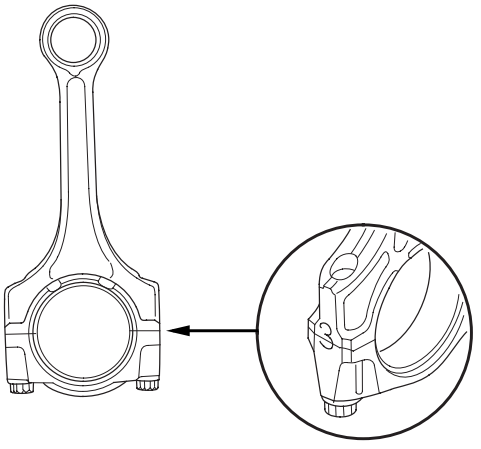

(cont'd)

Connecting Rod Bearing Replacement (cont'd)

Connecting Rod Journal Code Location

3. The connecting rod journal codes are stamped on the crankshaft.

Connecting Rod Journal Code Location (Letters or Bars)

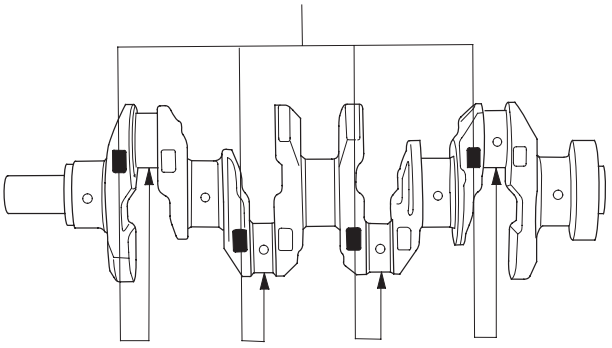

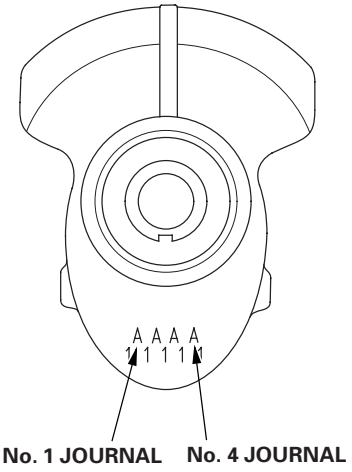

4. Use the big end bore codes and rod journal codes to select appropriate replacement bearings from the following table.

NOTE:
- Color code is on the edge of the bearing.
- When using bearing halves of different colors, it does not matter which color is used in the top or bottom.

K20A3 engine:

Big end bore code → Larger big end bore

Rod journal code → Smaller bearing (Thicker)

Rod journal code	1 or I	2 or II	3 or III	4 or IIII
A	Pink	Pink/ Yellow	Yellow/ Green	Green
B	Yellow	Yellow/ Green	Green/ Brown	Brown
C	Green	Green/ Brown	Brown/ Black	Black
D	Brown	Brown/ Black	Black/ Blue	Blue

Smaller rod journal ↓ Smaller bearing (Thicker) ↓

K20A2, K20Z1 engines:

Big end bore code → Larger big end bore

Rod journal code → Smaller bearing (Thicker)

Rod journal code	1 or I	2 or II	3 or III	4 or IIII
A	Red	Pink	Yellow	Green
B	Pink	Yellow	Green	Brown
C	Yellow	Green	Brown	Black
D	Green	Brown	Black	Blue

Smaller rod journal ↓ Smaller bearing (Thicker) ↓

Oil Pan Removal

K20A3 Engine

1. If the engine is still in the vehicle, remove the subframe.

   –1 Drain the engine oil (see page 8-8).
   –2 Attach the chain hoist to the engine (see step 41 on page 5-7).
   –3 Disconnect the suspension lower arm ball joints (see step 10 on page 18-13).
   –4 Remove the rear mount mounting bolts (see step 45 on page 5-9).
   –5 Remove the front mount mounting bolt (see step 46 on page 5-10).
   –6 Remove the automatic transmission (ATF) filter mounting bolt (A/T) (see step 36 on page 5-7).
   –7 Use a marker to make alignment marks on the reference lines that align with the centers of the rear subframe mounting bolts. Remove the front subframe (see step 48 on page 5-10).

2. Remove the bolts/nuts securing the oil pan.

3. Drive an oil pan seal cutter between the oil pan and engine block.

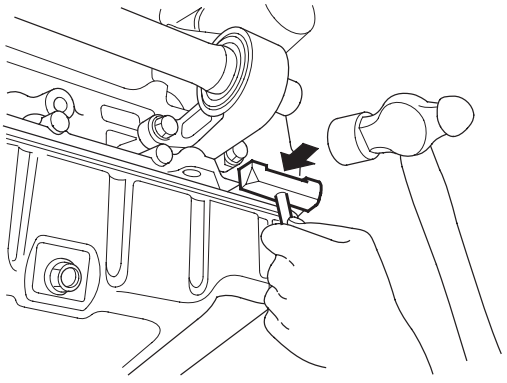

4. Cut the oil pan seal by striking the side of the cutter to slide the cutter along the oil pan.

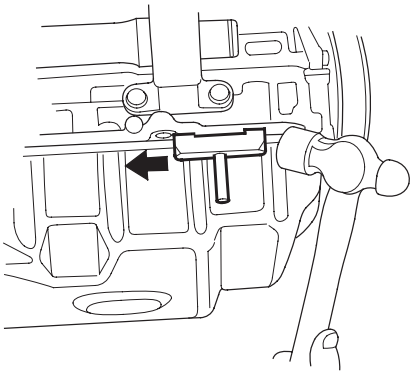

5. Remove the oil pan.

Oil Pan Removal (cont'd)

K20A2, K20Z1 Engines

1. If the engine is still in the vehicle, remove the subframe.

   –1 Drain the engine oil (see page 8-8).
   –2 Attach the chain hoist to the engine (see step 41 on page 5-7).
   –3 Disconnect the suspension lower arm ball joints (see step 10 on page 18-13).
   –4 Remove the rear mount mounting bolts (see step 45 on page 5-9).
   –5 Remove the front mount mounting bolt (see step 46 on page 5-10).
   –6 Use a marker to make alignment marks on the reference lines that align with the centers of the rear subframe mounting bolts. Remove the front subframe (see step 48 on page 5-10).

2. Remove the clutch cover (A), and remove the two bolts (B) securing the transmission.

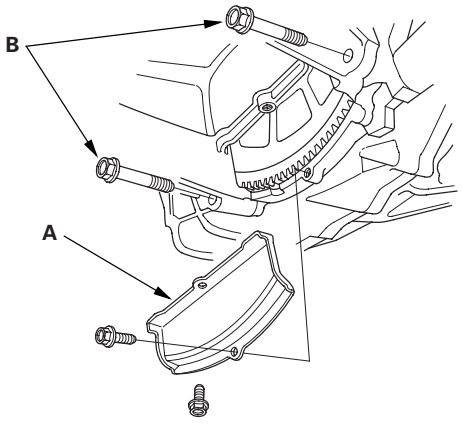

3. Remove the bolts/nuts securing the oil pan.

4. Insert a flat tip screwdriver where shown, and separate the oil pan from the block.

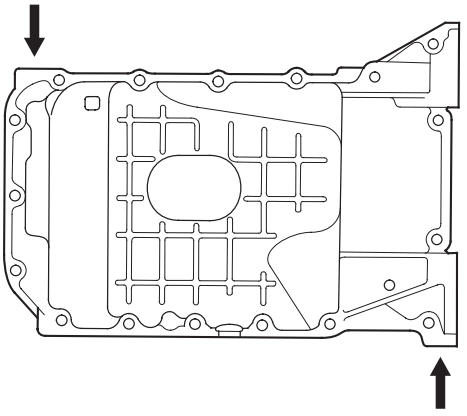

5. Remove the oil pan.

Crankshaft and Piston Removal

1. Remove the engine assembly (see page 5-2).

2. A/T model: Remove the transmission (see page 14-273), then remove the drive plate (see page 14-281).

3. M/T model: Remove the transmission (see page 13-5). Remove the pressure plate and clutch disc (see page 12-12), then remove the flywheel (see page 12-14).

4. Remove the oil pan (see page 7-11).

5. Remove the oil pump (see page 8-13).

6. Remove the cylinder head (see page 6-31).

7. Remove the baffle plate.

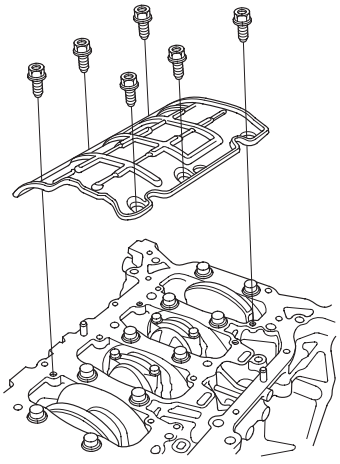

8. If you can feel a ridge of metal or hard carbon around the top of each cylinder, remove it with a ridge reamer (A). Follow the reamer manufacturer's instructions. If the ridge is not removed, it may damage the pistons as they are pushed out.

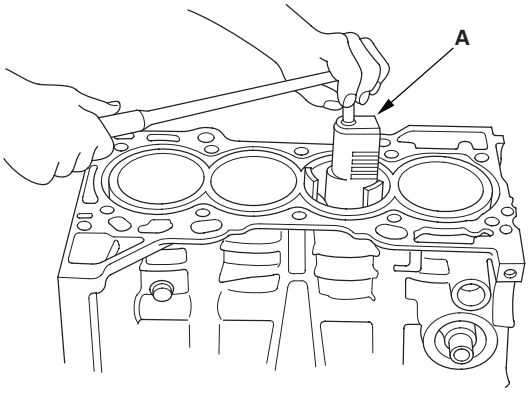

9. Remove the 8 mm bolts.

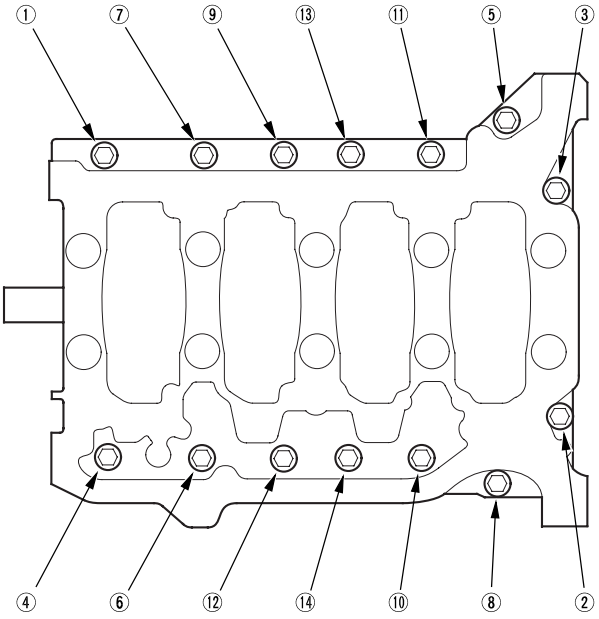

10. Remove the bearing cap bolts. To prevent warpage, unscrew the bolts in sequence 1/3 turn at a time: repeat the sequence until all bolts are loosened.

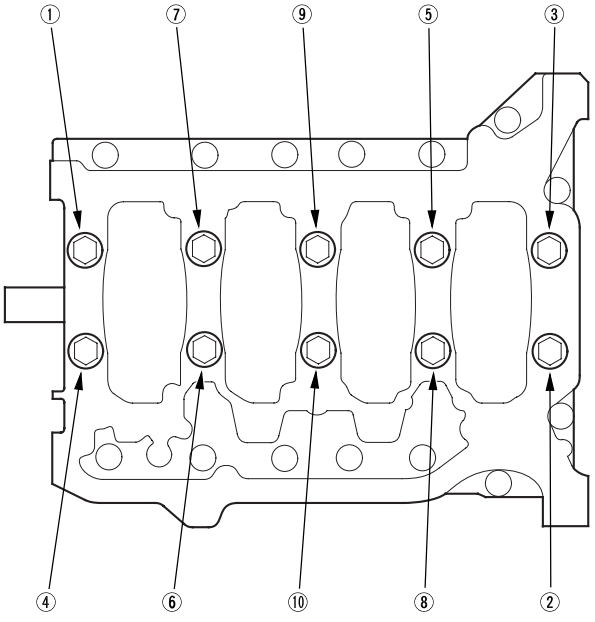

(cont'd)

Crankshaft and Piston Removal (cont'd)

11. Remove the lower block and bearings. Keep all bearings in order.

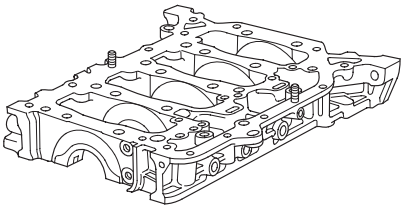

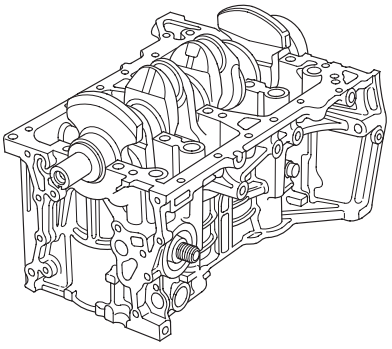

12. Remove the rod caps/bearings. Keep all caps/bearings in order.

13. Lift the crankshaft out of the engine, being careful not to damage the journals.

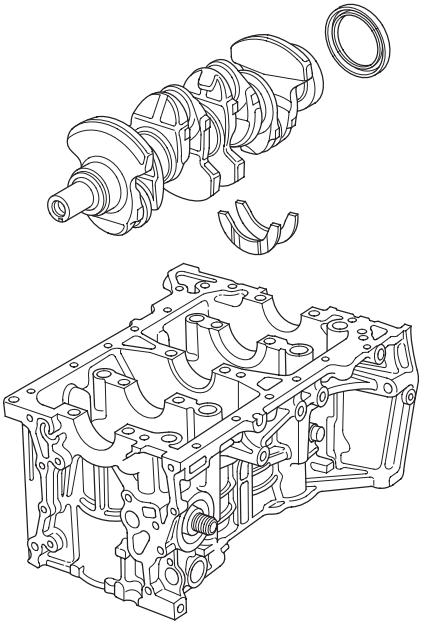

14. Remove the upper bearing halves from the connecting rods, and set them aside with their respective caps.

15. Use the wooden handle of a hammer (A) to drive out the pistons (B).

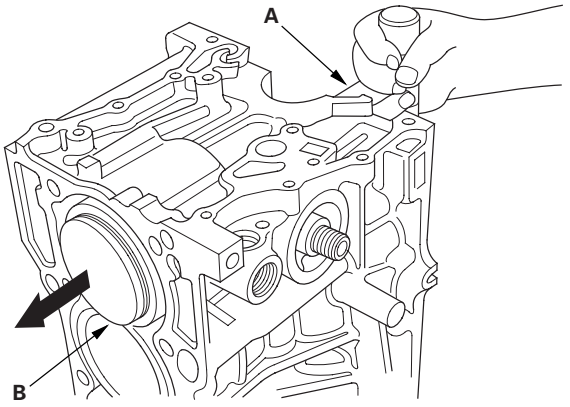

16. Reinstall the lower block and bearings on the engine in the proper order.

17. Reinstall the connecting rod bearings and caps after removing each piston/connecting rod assembly.

18. To avoid mix-up on reassembly, mark each piston/connecting rod assembly with its cylinder number.

    NOTE: The existing number on the connecting rod does not indicate its position in the engine, it indicates the rod bore size.

Crankshaft Inspection

Out-of-Round and Taper

1. Remove the crankshaft from the engine block (see page 7-13).

2. Clean the crankshaft oil passages with pipe cleaners or a suitable brush.

3. Clean the keyway and threads.

4. Measure out-of-round at the middle of each rod and main journal in two places. The difference between measurements on each journal must not be more than the service limit.

   Journal Out-of-Round
   Standard (New): 0.005 mm (0.0002 in.) max.
   Service Limit: 0.010 mm (0.0004 in.)

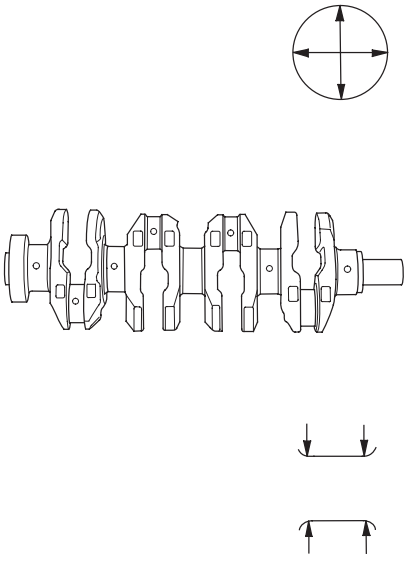

5. Measure taper at the edges of each rod and main journal. The difference between measurements on each journal must not be more than the service limit.

   Journal Taper
   Standard (New): 0.005 mm (0.0002 in.) max.
   Service Limit: 0.010 mm (0.0004 in.)

Straightness

6. Place the engine block on the surface plate.

7. Clean and install the bearings on the No. 1 and No. 5 journal of the engine block.

8. Lower the crankshaft into the block.

9. Measure runout on all main journals. Rotate the crankshaft two complete revolutions. The difference between measurements on each journal must not be more than the service limit.

   Crankshaft Total Runout
   K20A3 Engine:
   Standard (New): 0.03 mm (0.0012 in.) max.
   Service Limit: 0.04 mm (0.0016 in.)
   K20A2, K20Z1 Engines:
   Standard (New): 0.02 mm (0.0008 in.) max.
   Service Limit: 0.03 mm (0.0012 in.)

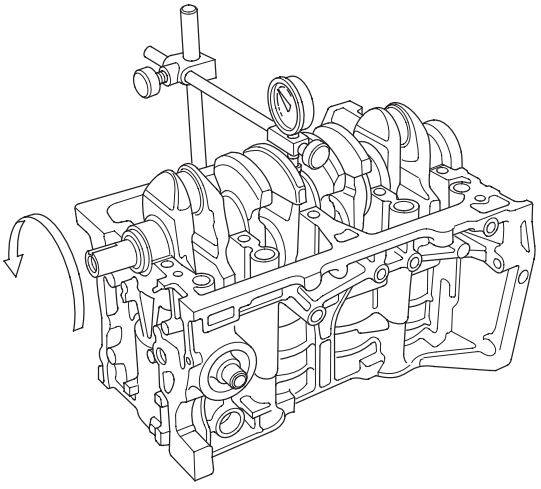

Block and Piston Inspection

1. Remove the crankshaft and pistons (see page 7-13).

2. Check the piston for distortion or cracks.

3. Measure the piston diameter at a point 11 mm (0.4 in.) from the bottom of the skirt. There are two standard-size pistons (No Letter or A, and B). The letter is stamped on the top of the piston. Letters are also stamped on the block as cylinder bore sizes.

   Piston Diameter
   Standard (New):
   No Letter (or A): 85.980—85.990 mm (3.3850—3.3854 in.)
   B: 85.970—85.980 mm (3.3846—3.3850 in.)
   Service Limit:
   No Letter (or A): 85.930 mm (3.3831 in.)
   B: 85.920 mm (3.3827 in.)

   Oversize Piston Diameter
   0.25: 86.230—86.240 mm (3.3949—3.3953 in.)

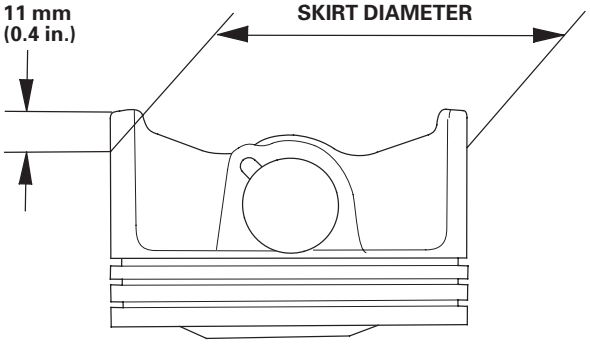

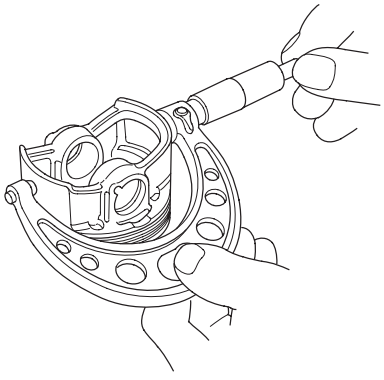

4. Measure wear and taper in direction X and Y at three levels in each cylinder as shown. If measurements in any cylinder are beyond the oversize bore service limit, replace the block. If the block is to be rebored, refer to step 7 after reboring.

   Cylinder Bore Size
   Standard (New):
   A or I: 86.010—86.020 mm (3.3862—3.3866 in.)
   B or II: 86.000—86.010 mm (3.3858—3.3862 in.)
   Service Limit: 86.070 mm (3.3886 in.)

   Oversize
   0.25: 86.250—86.260 mm (3.3957—3.3961 in.)

   Reboring Limit: 0.25 mm (0.01 in.) max.

   Bore Taper:
   Limit: (Difference between first and third measurement) 0.05 mm (0.002 in.)

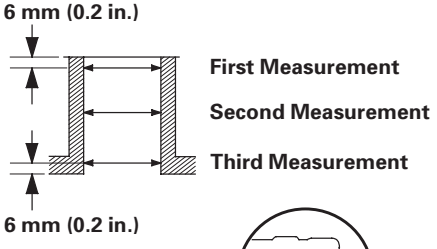

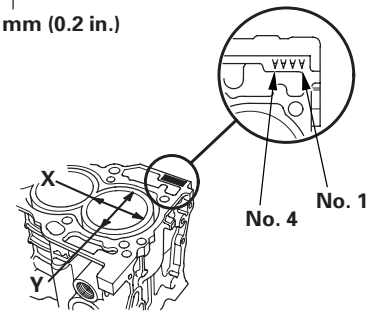

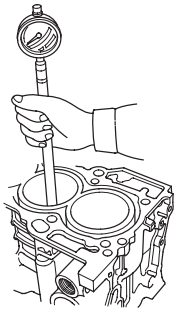

5. Scored or scratched cylinder bores must be honed.

6. Check the top of the block for warpage. Measure along the edges and across the center as shown.

   Engine Block Warpage
   Standard (New): 0.07 mm (0.003 in.) max.
   Service Limit: 0.10 mm (0.004 in.)

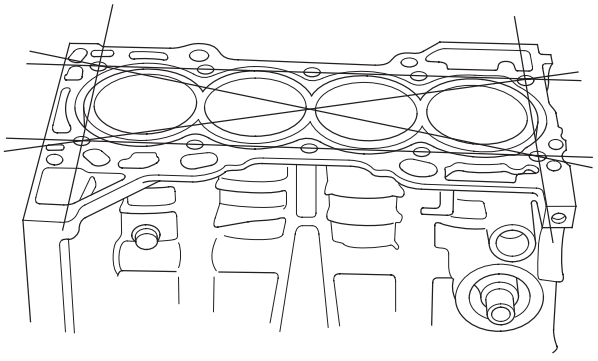

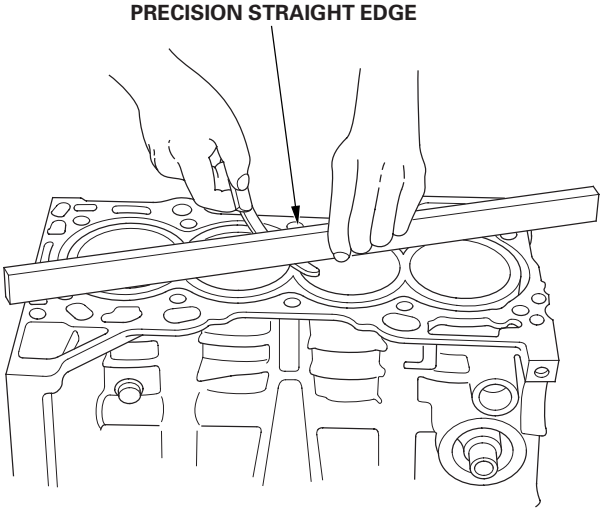

7. Calculate the difference between the cylinder bore diameter and the piston diameter. If the clearance is near or exceeds the service limit, inspect the piston and engine block for excessive wear.

   Piston-to-Cylinder Bore Clearance
   Standard (New): 0.020—0.040 mm (0.0008—0.0016 in.)
   Service Limit: 0.05 mm (0.002 in.)

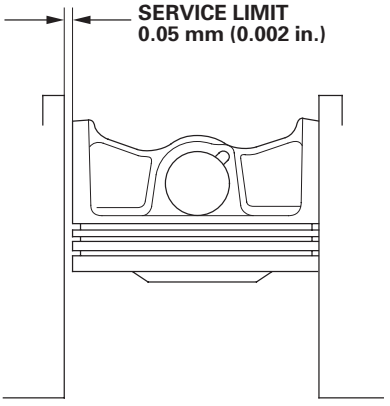

Cylinder Bore Honing

Only a scored or scratched cylinder bore must be honed.

1. Measure the cylinder bores (see page 7-16).
   If the block is to be reused, hone the cylinders and remeasure the bores.

2. Hone the cylinder bores with honing oil and a fine (400 grit) stone in a 60 degree cross-hatch pattern (A). Use only a rigid hone with 400 grit or finer stone such as Sunnen, Ammco, or equivalent. Do not use stones that are worn or broken.

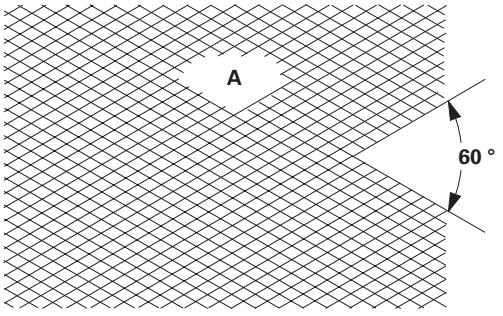

3. When honing is complete, thoroughly clean the engine block of all metal particles. Wash the cylinder bores with hot soapy water, then dry and oil them immediately to prevent rusting. Never use solvent, it will only redistribute the grit on the cylinder walls.

4. If scoring or scratches are still present in the cylinder bores after honing to the service limit, rebore the engine block. Some light vertical scoring and scratching is acceptable if it is not deep enough to catch your fingernail and does not run the full length of the bore.

Piston, Pin, and Connecting Rod Replacement

Disassembly

1. Remove the piston from the engine block (see page 7-13).

2. Apply new engine oil to the piston pin snap rings (A), and turn them in the ring grooves until the end gaps are lined up with the cutouts in the piston pin bores (B).

   NOTE: Take care not to damage the ring grooves.

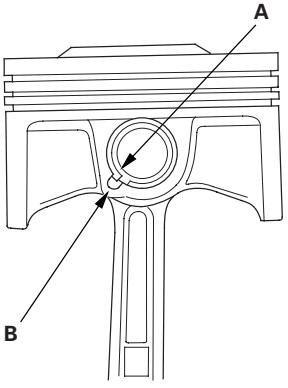

3. Remove both snap rings (A). Start at the cutout in the piston pin bore. Remove the snap rings carefully so they do not go flying or get lost. Wear eye protection.

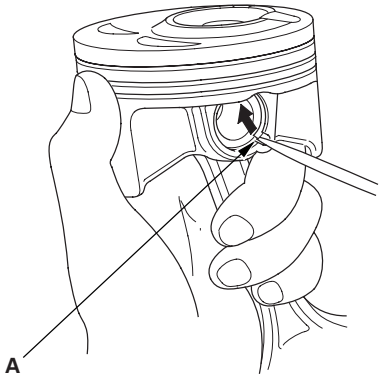

4. Heat the piston and connecting rod assembly to about 158 °F (70 °C), then remove the piston pin.

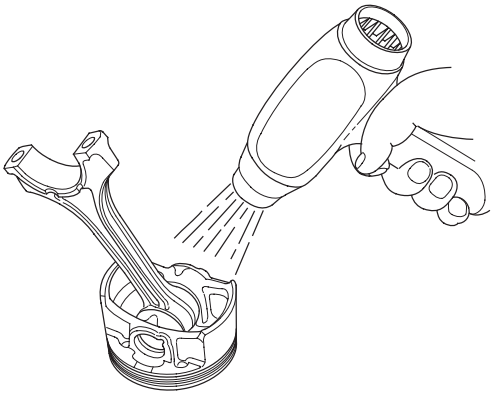

(cont'd)

Piston, Pin, and Connecting Rod Replacement (cont'd)

Inspection

NOTE: Inspect the piston, piston pin, and connecting rod when they are at room temperature.

1. Measure the diameter of the piston pin.

   Piston Pin Diameter
   Standard (New): 21.961—21.965 mm (0.8646—0.8648 in.)
   Service Limit: 21.953 mm (0.8643 in.)

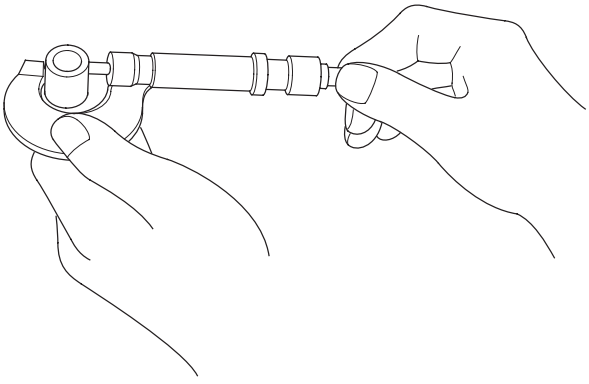

2. Zero the dial indicator to the piston pin diameter.

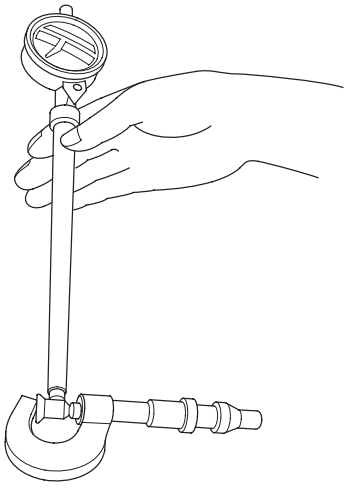

3. Check the difference between the piston pin diameter and piston pin hole diameter in the piston.

   Piston Pin-to-Piston Clearance
   Standard (New): —0.005 to +0.002 mm (—0.00020 to +0.00008 in.)
   Service Limit: 0.005 mm (0.0002 in.)

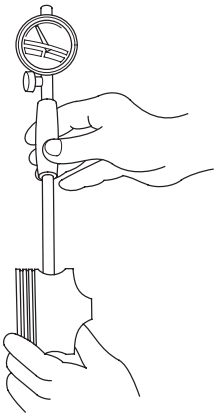

4. Measure the piston pin-to-connecting rod clearance.

   Piston Pin-to-Connecting Rod Clearance
   Standard (New): 0.005—0.015 mm (0.0002—0.0006 in.)
   Service Limit: 0.02 mm (0.0008 in.)

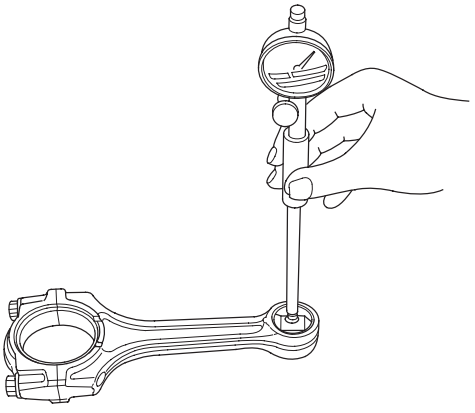

Reassembly

1. Install a piston pin snap ring (A) only on one side.

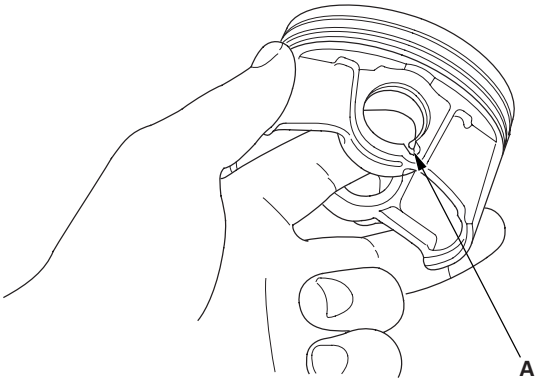

2. Coat the piston pin bore in the piston, the bore in the connecting rod, and the piston pin with engine oil.

3. Heat the piston to about 158 °F (70 °C).

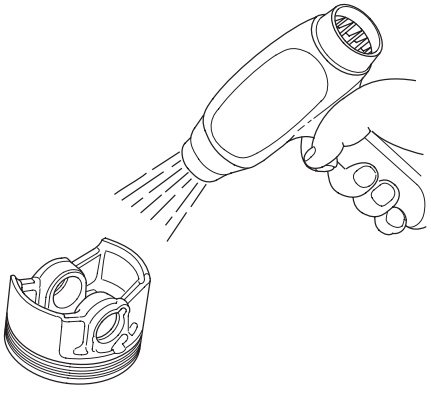

4. Install the piston pin (A). Assemble the piston (B) and connecting rod (C) with the arrow (D) and the embossed mark (E) on the same side.

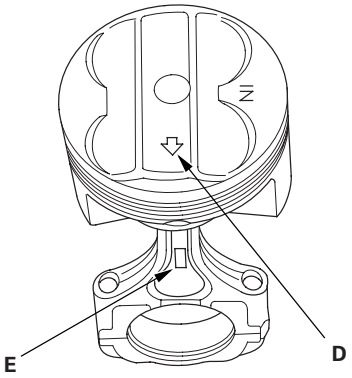

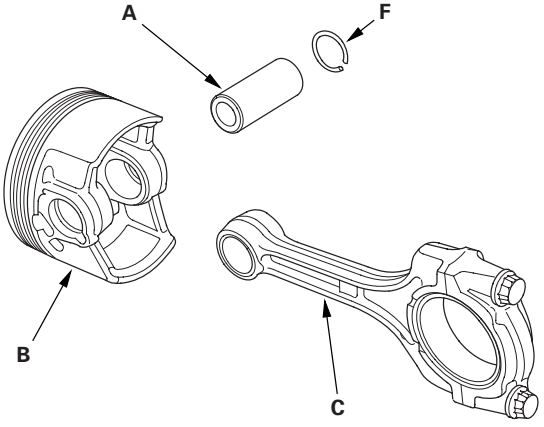

5. Install the remaining snap ring (F).

6. Turn the snap rings in the ring grooves until the end gaps are positioned at the bottom of the piston.

Piston Ring Replacement

1. Remove the piston from the engine block (see page 7-13).

2. Using a ring expander (A), remove the old piston rings (B).

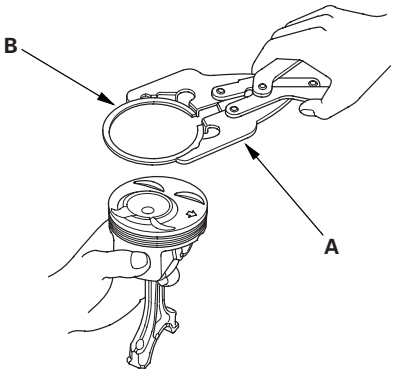

3. Clean all ring grooves thoroughly with a squared-off broken ring or ring groove cleaner with a blade to fit the piston grooves. The top and 2nd ring grooves are 1.2 mm (0.05 in.) wide. The oil ring groove is 2.0 mm (0.08 in.) wide. File down a blade, if necessary. Do not use a wire brush to clean the ring grooves, or cut the ring grooves deeper with the cleaning tools.

   NOTE: If the piston is to be separated from the connecting rod, do not install new rings yet.

4. Using a piston, push a new ring (A) into the cylinder bore 15—20 mm (0.6—0.8 in.) from the bottom.

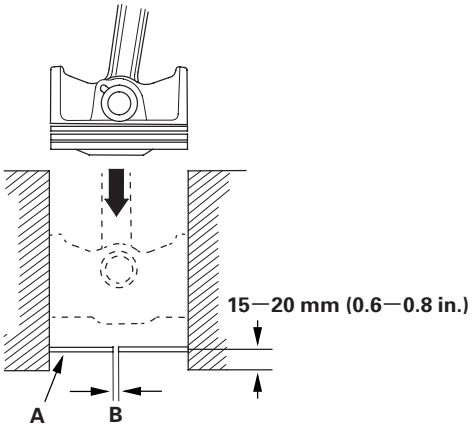

5. Measure the piston ring end-gap (B) with a feeler gauge:

   - If the gap is too small, check to see if you have the proper rings for your engine.
   - If the gap is too large, recheck the cylinder bore diameter against the wear limits (see page 7-16). If the bore is over the service limit, the engine block must be rebored.

   Piston Ring End-Gap
   Top Ring:
   Standard (New): 0.20—0.35 mm (0.008—0.014 in.)
   Service Limit: 0.60 mm (0.024 in.)
   Second Ring:
   K20A3 Engine:
   Standard (New): 0.40—0.55 mm (0.016—0.022 in.)
   Service Limit: 0.70 mm (0.028 in.)
   K20A2, K20Z1 Engines:
   Standard (New): 0.50—0.65 mm (0.020—0.026 in.)
   Service Limit: 0.75 mm (0.030 in.)
   Oil Ring:
   K20A3 Engine:
   Standard (New): 0.25—0.65 mm (0.010—0.026 in.)
   Service Limit: 0.75 mm (0.030 in.)
   K20A2, K20Z1 Engines:
   Standard (New): 0.20—0.70 mm (0.008—0.028 in.)
   Service Limit: 0.80 mm (0.031 in.)

6. Install the top ring and second ring as shown. The top ring (A) has a T1 or R1 mark and the second ring (B) has a T2 or R2 mark. The manufacturing marks (C) must be facing upward.

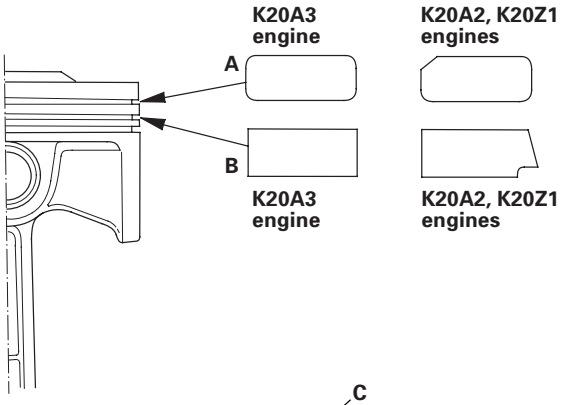

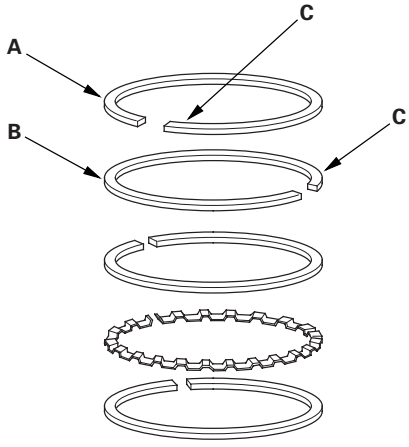

PISTON RING DIMENSIONS:

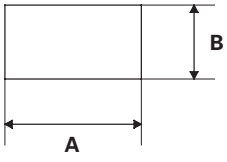

TOP RING (STANDARD):
A: 3.1 mm (0.12 in.)
B: 1.2 mm (0.05 in.)

SECOND RING (STANDARD):
K20A3 engine:
A: 2.8 mm (0.11 in.)
B: 1.2 mm (0.05 in.)

K20A2, K20Z1 engines:
A: 3.4 mm (0.13 in.)
B: 1.2 mm (0.05 in.)

7. Rotate the rings in their grooves to make sure they do not bind.

8. Position the ring end gaps as shown:

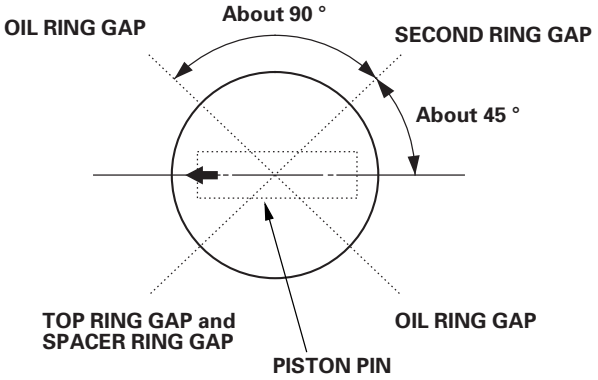

9. After installing a new set of rings, measure the ring-to-groove clearances:

Top Ring Clearance
K20A3 Engine:
Standard (New): 0.035—0.060 mm (0.0014—0.0024 in.)
Service Limit: 0.13 mm (0.005 in.)
K20A2, K20Z1 Engines:
Standard (New): 0.040—0.065 mm (0.0016—0.0026 in.)
Service Limit: 0.13 mm (0.005 in.)

Second Ring Clearance
K20A3 Engine:
Standard (New): 0.030—0.055 mm (0.0012—0.0022 in.)
Service Limit: 0.13 mm (0.005 in.)
K20A2, K20Z1 Engines:
Standard (New): 0.045—0.070 mm (0.0018—0.0028 in.)
Service Limit: 0.13 mm (0.005 in.)

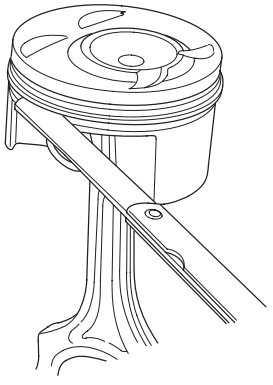

Piston Installation

If the Crankshaft is Already Installed

1. Set the crankshaft to bottom dead center (BDC) for each cylinder.

2. Apply new engine oil to the piston, inside of the ring compressor, and the cylinder bore.

3. Attach the ring compressor to the piston/connecting rod assembly, and check that the bearing is securely in place.

4. Position the piston/connecting rod assembly with the arrow (A) facing the timing belt side of the engine.

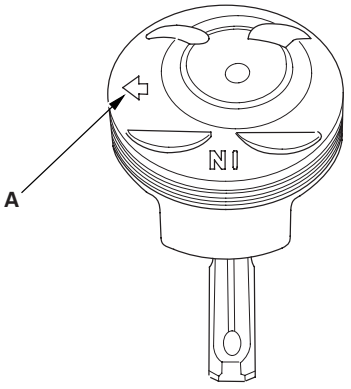

5. Position the piston connecting rod assembly in the cylinder, and tap it in using the wooden handle of a hammer (A).
   Maintain downward force on the ring compressor (B) to prevent the rings from expanding before entering the cylinder bore.

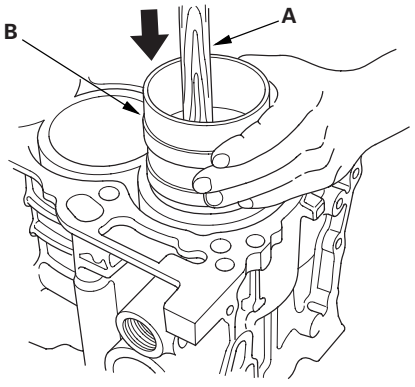

6. Stop after the ring compressor pops free, and check the connecting rod-to-crank journal alignment before pushing the piston into place.

7. Check the connecting rod bearing clearance with plastigage (see page 7-8).

8. Inspect the connecting rod bolts (see page 7-25).

9. Apply engine oil to the bolt threads, then install the rod caps with bearings. Tighten the connecting rod bolts.

   Tightening Torque
   K20A3 Engine: 20 N·m (2.0 kgf·m, 14 lbf·ft)
   K20A2, K20Z1 Engines: 29 N·m (3.0 kgf·m, 22 lbf·ft)

10. Tighten the connecting rod bolts an additional 90 °.

    NOTE: Remove the connecting rod bolt if you tightened it beyond the specified angle, and go back to step 8 of the procedure. Do not loosen it back to the specified angle.

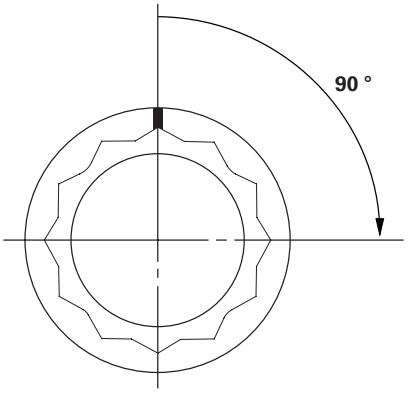

If the Crankshaft is Not Installed

1. Remove the connecting rod caps, then install the ring compressor, and check that the bearing is securely in place.

2. Apply new engine oil to the piston, inside of the ring compressor, and cylinder bore, then attach the ring compressor to the piston/connecting rod assembly.

3. Position the arrow (A) facing the cam chain side of the engine.

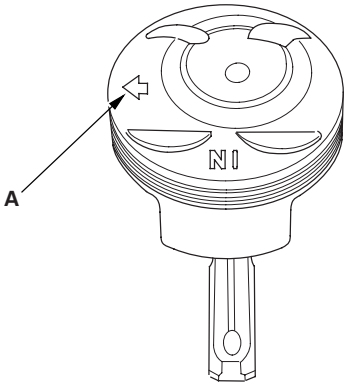

4. Position the piston connecting rod assembly in the cylinder, and tap it in using the wooden handle of a hammer (A).
   Maintain downward force on the ring compressor (B) to prevent the rings from expanding before entering the cylinder bore.

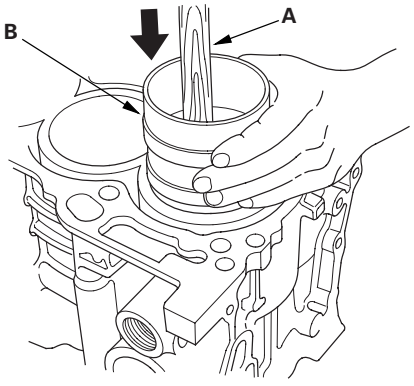

5. Position all pistons at top dead center.

Connecting Rod Bolt Inspection

1. Measure the diameter of each connecting rod bolt at point A and point B.

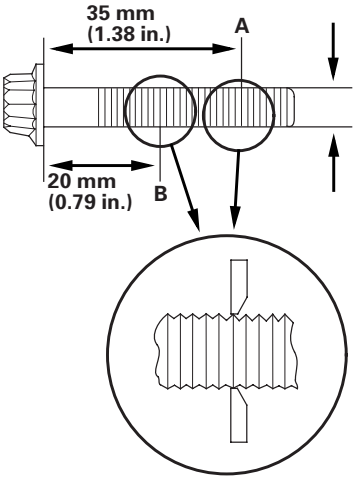

2. Calculate the difference in diameter between point A and point B.

   Point A—Point B = Difference in Diameter

   Difference in Diameter:
   Specification: 0—0.1 mm (0—0.004 in.)

3. If the difference in diameter is out-of-tolerance, replace the connecting rod bolt.

Crankshaft Installation

Special Tools Required
- Driver 07749-0010000
- Attachment, 24 x 26 mm 07746-0010700
- Oil seal driver attachment 96 07ZAD-PNAA100

1. With a manual transmission, install the crankshaft pilot bushing when replacing the crankshaft. Using the special tools, drive in the crankshaft pilot bushing until the special tools bottom against the crankshaft.

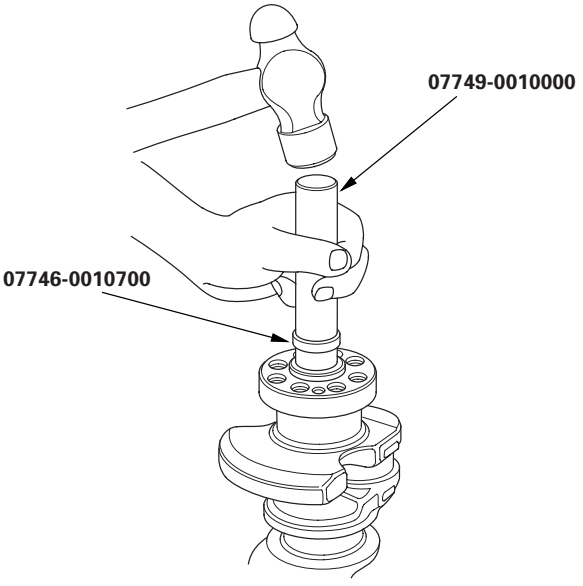

2. Check the connecting rod bearing clearance with plastigage (see page 7-8).

3. Check the main bearing clearance with plastigage (see page 7-6).

4. Inspect the connecting rod bolts (see page 7-25).

5. Install the bearing halves in the engine block and connecting rods.

6. Apply a coat of new engine oil to the main bearings and rod bearings.

7. Hold the crankshaft so rod journal No. 2 and rod journal No. 3 are straight up, then lower the crankshaft into the block.

8. Install the thrust washers (A) in the No. 4 journal of the engine block.

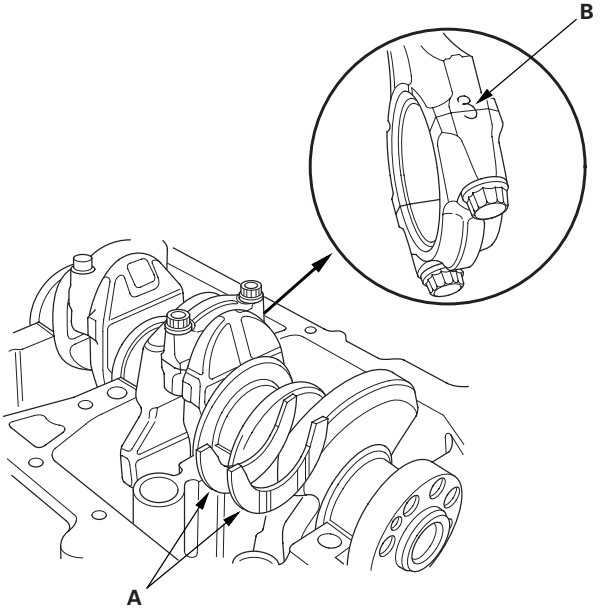

9. Apply engine oil to the threads of the connecting rod bolts.

10. Seat the rod journals into connecting rod No. 1 and connecting rod No. 4. Line up the mark (B) on the connecting rod and cap, then install the caps and bolts finger-tight.

11. Rotate the crankshaft clockwise, and seat the journals into connecting rod No. 2 and connecting rod No. 3. Line up the mark on the connecting rod and cap, then install the caps and bolts finger-tight.

12. Tighten the connecting rod bolts.

    Tightening Torque
    K20A3 Engine: 20 N·m (2.0 kgf·m, 14 lbf·ft)
    K20A2, K20Z1 Engines: 29 N·m (3.0 kgf·m, 22 lbf·ft)

13. Tighten the connecting rod bolts an additional 90 °.

    NOTE: Remove the connecting rod bolt if you tightened it beyond the specified angle, and go back to step 4 of the procedure. Do not loosen it back to the specified angle.

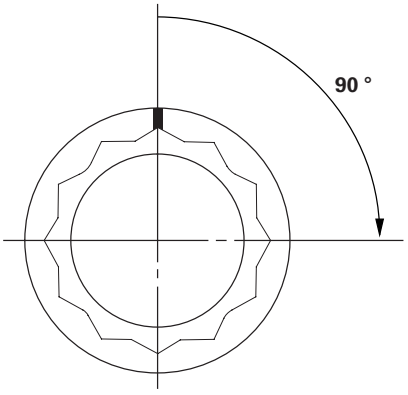

14. Remove all of the old liquid gasket from the lower block mating surfaces, bolts and bolt holes.

15. Clean and dry the lower block mating surfaces.

16. Apply liquid gasket, P/N 08717-0004, 08718-0001, 08718-0002, 08718-0003, or 08718-0009, evenly to the engine block mating surface of the lower block.

    NOTE: Do not install components if too much time has passed after applying the liquid gasket (for P/N 08718-0002, no more than 4 minutes, for all others, no more than 5 minutes). Instead, remove the old residue and reapply the liquid gasket.

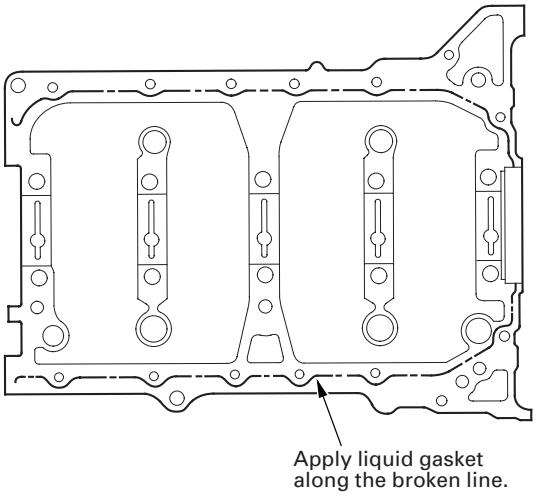

17. Put the lower block on the engine block.

18. Tighten the bearing cap bolts in sequence to 29 N·m (3.0 kgf·m, 22 lbf·ft).

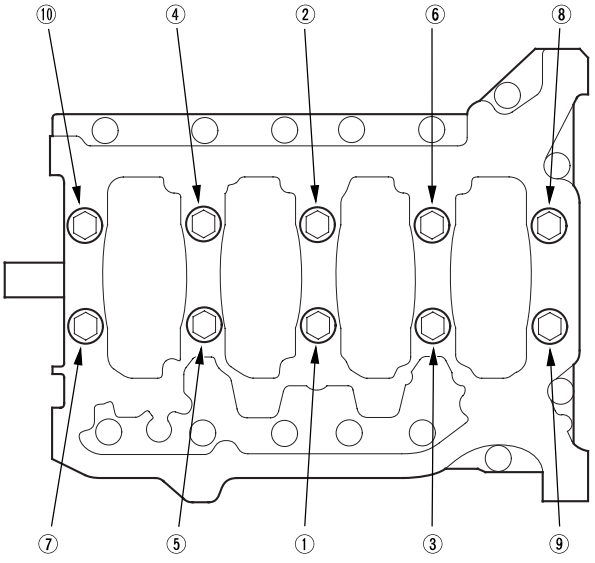

(cont'd)

Crankshaft Installation (cont'd)

19. Tighten the bearing cap bolts an additional 56 °.

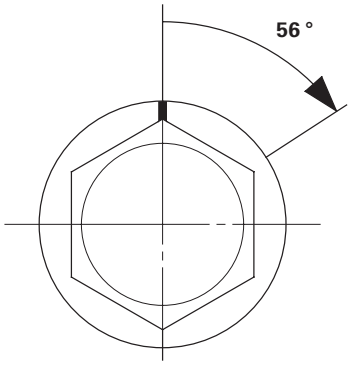

20. Tighten the 8 mm bolts in sequence to 22 N·m (2.2 kgf·m, 16 lbf·ft).

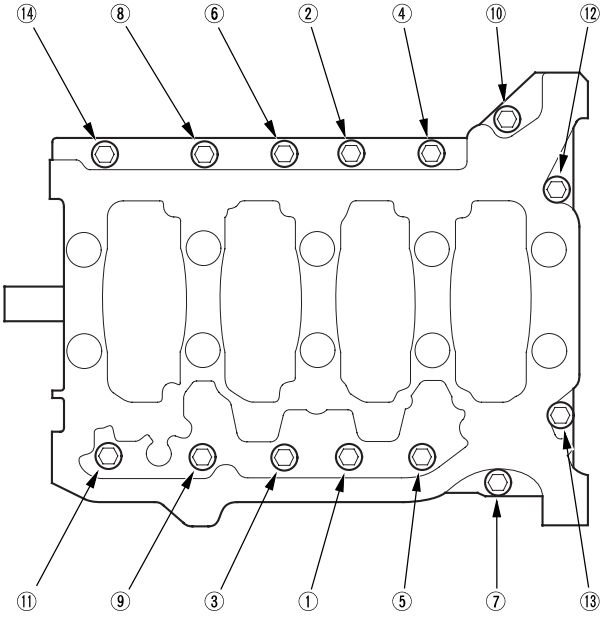

21. Use the special tools to drive a new oil seal squarely into the block to the specified installed height.

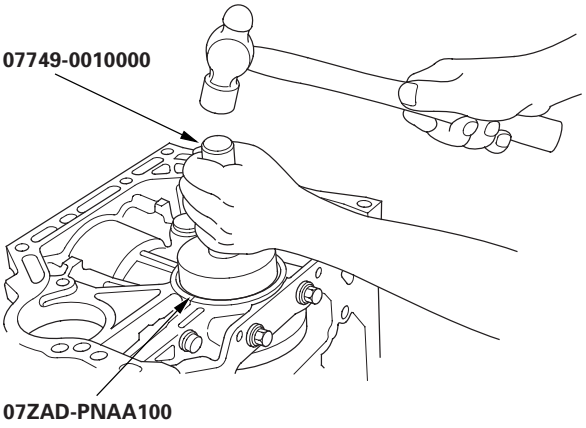

22. Measure the distance between the crankshaft (A) and oil seal (B).

Oil Seal Installed Height: 5.5—6.5 mm (0.22—0.26 in.)

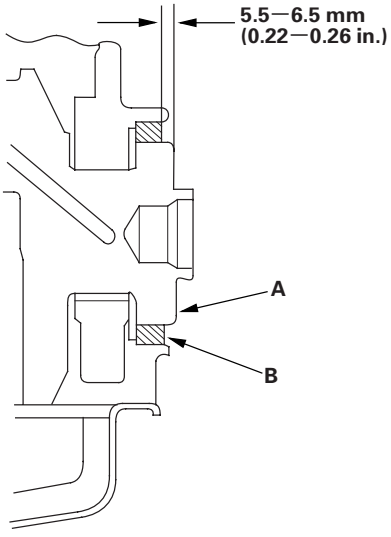

23. Install the baffle plate.

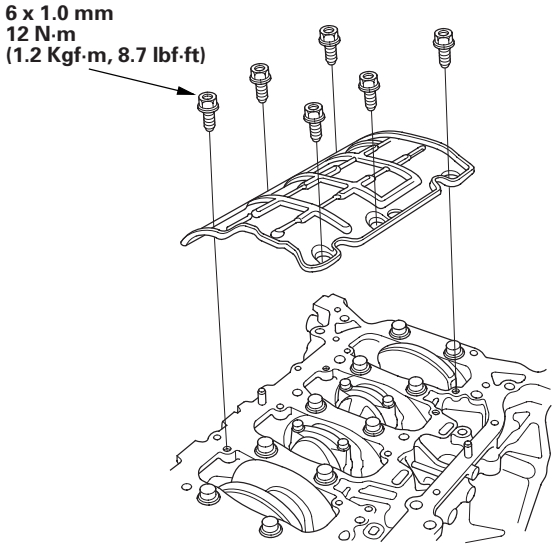

24. Install the oil pump (see page 8-14).

25. Install the oil pan (see page 7-29).

26. Install the cylinder head (see page 6-51).

27. A/T model: Install the drive plate (see page 14-281), then install the transmission (see page 14-282).

28. M/T model: Install the flywheel (see page 12-14), then install the clutch disc and pressure plate (see page 12-15). Install the transmission (see page 13-12).

29. Install the engine assembly (see page 5-11).

    NOTE: Whenever any crankshaft or connecting rod bearing is replaced, it is necessary after reassembly to run the engine at idling speed until it reaches normal operating temperature, then continue to run it for about 15 minutes.

Oil Pan Installation

K20A3 Engine

1. Remove all of the old liquid gasket from the oil pan mating surfaces, bolts, and bolt holes.

2. Clean and dry the oil pan mating surfaces.

3. Apply liquid gasket, P/N 08717-0004, 08718-0001 08718-0002, 08718-0003 or 08718-0009, evenly to the engine block mating surface of the oil pan.

   NOTE: Do not install components if too much time has pssed after applying the liquid gasket (for P/N 08718-0002, no more than 4 minutes, for all others, no more than 5 minutes). Instead, remove the old residue and reapply the liquid gasket.

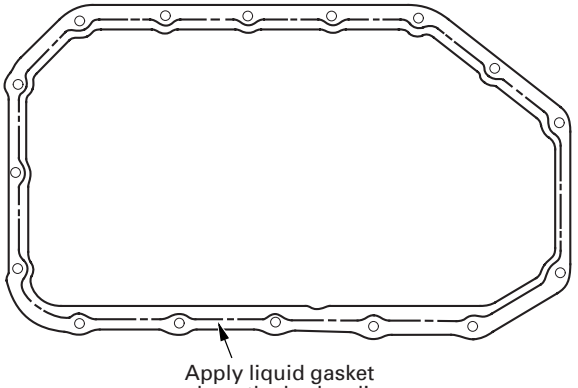

Apply liquid gasket along the broken line.

4. Install the oil pan.

(cont'd)

Oil Pan Installation (cont'd)

5. Tighten the bolts in two or three steps. In the final step, tighten all bolts in sequence to 12 N·m (1.2 kgf·m, 8.7 lbf·ft). Wipe off the excess liquid gasket on the each side of crankshaft pulley and flywheel/drive plate.

   NOTE:
   - Wait at least 30 minutes before filling the engine with oil.
   - Do not run the engine for at least 3 hours after installing the oil pan.

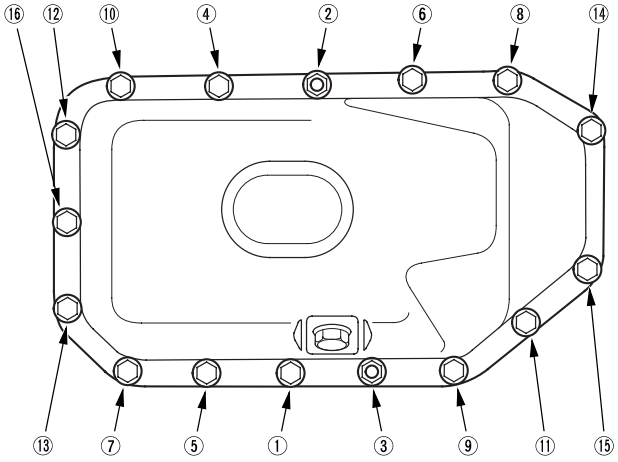

6. If the engine is still in the vehicle, install the subframe.

   –1 Install the subframe. Align the reference lines on the subframe with the bolt head center, then tighten the bolts (see step 4 on page 5-12).
   –2 Install the automatic transmission (ATF) filter mounting bolt (see step 24 on page 5-16).
   –3 Tighten the rear mount mounting bolts (see step 5 on page 5-13).
   –4 Tighten the new front mount mounting bolt (see step 11 on page 5-15).
   –5 Connect the suspension lower arm ball joints (see step 10 on page 18-13).

K20A2, K20Z1 Engines

1. Remove all of the old liquid gasket from the oil pan mating surfaces, bolts, and bolt holes.

2. Clean and dry the oil pan mating surfaces.

3. Apply liquid gasket, P/N 08717-0004, 08718-0001, 08718-0002, 08718-0003 or 08718-0009, evenly to the engine block mating surface of the oil pan.

   NOTE: Do not install components if too much time has passed after applying the liquid gasket (for P/N 08718-0002, no more than 4 minutes, for all others, no more than 5 minutes). Instead, remove the old residue and reapply the liquid gasket.

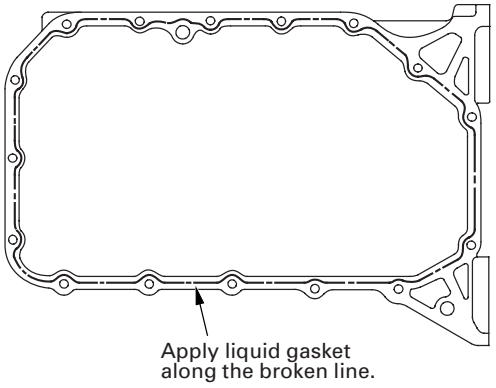

4. Install the oil pan.

5. Tighten the bolts in two or three steps. In the final step, tighten all bolts in sequence to 12 N·m (1.2 kgf·m, 8.7 lbf·ft). Wipe off the excess liquid gasket on the each side of crankshaft pulley and flywheel/drive plate.

   NOTE:
   - Wait at least 30 minutes before filling the engine with oil.
   - Do not run the engine for at least 3 hours after installing the oil pan.

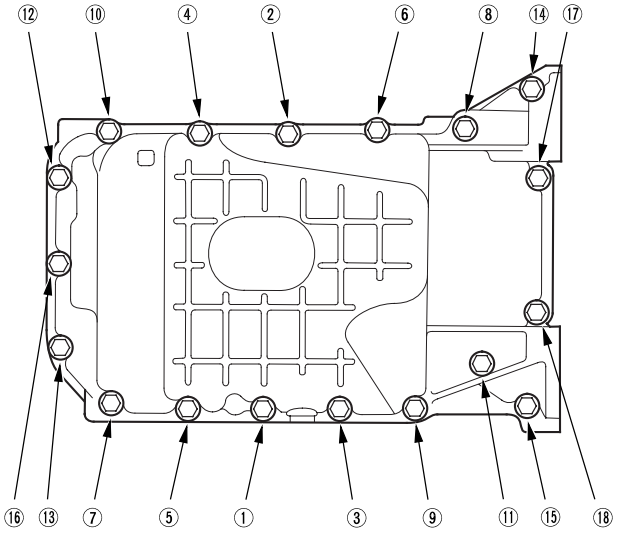

6. Install the clutch cover (A), and tighten the two bolts (B) securing the transmission.

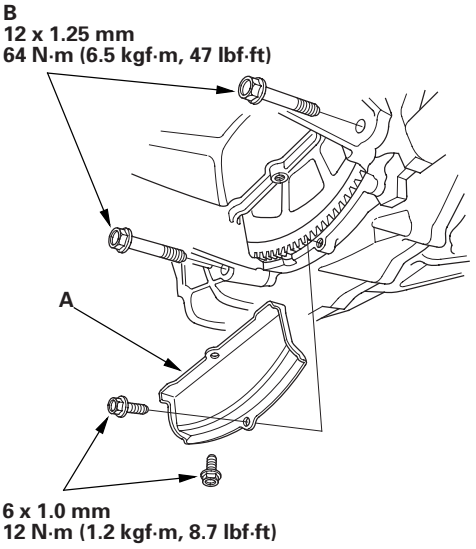

7. If the engine is still in the vehicle, install the subframe.

   –1 Install the subframe. Align the reference lines on the subframe with the bolt head center, then tighten the bolts (see step 4 on page 5-12).
   –2 Tighten the rear mount mounting bolts (see step 5 on page 5-13).
   –3 Tighten the new front mount mounting bolt (see step 11 on page 5-15).
   –4 Connect the suspension lower arm ball joints (see step 10 on page 18-13).

Transmission End Crankshaft Oil Seal Installation - In Car

Special Tools Required
- Driver 07749-0010000
- Oil seal driver attachment 96 07ZAD-PNAA100

1. A/T model: Remove the transmission (see page 14-273), then remove the drive plate (see page 14-281).

2. M/T model: Remove the transmission (see page 13-5). Remove the pressure plate and clutch disc (see page 12-12), then remove the flywheel (see page 12-14).

3. Dry the crankshaft oil seal housing.

4. Use the special tools to drive a new oil seal squarely into the block to the specified installed height.

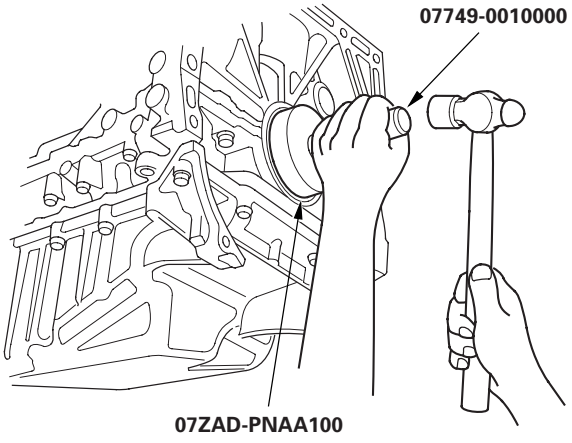

5. Measure the distance between the crankshaft (A) and oil seal (B).

   Oil Seal Installed Height:
   5.5—6.5 mm (0.22—0.26 in.)

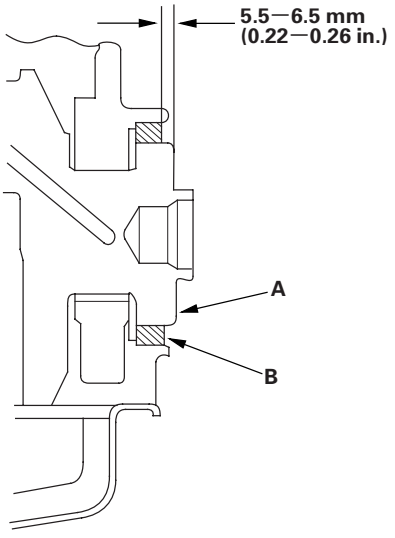

6. A/T model: Install the drive plate (see page 14-281), then install the transmission (see page 14-282).

7. M/T model: Install the flywheel (see page 12-14), then install the clutch disc and pressure plate (see page 12-15). Install the transmission (see page 13-12).

Engine Mechanical

Engine Lubrication

Special Tools 8-2
Component Location Index 8-3
Symptom Troubleshooting Index 8-5
Oil Pressure Switch Test 8-6
Oil Pressure Switch Replacement 8-6
Oil Pressure Test 8-7
Engine Oil Replacement 8-8
Engine Oil Filter Replacement 8-9
Oil Filter Feed Pipe Replacement 8-10
Oil Cooler Replacement 8-10
Oil Jet Inspection 8-11
Oil Pump Overhaul 8-12

Special Tools

Ref. No.	Tool Number	Description	Qty
①	07HAA-PJ70100	Oil Filter Wrench	1

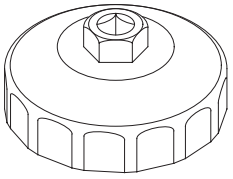

①

Component Location Index

K20A3 engine

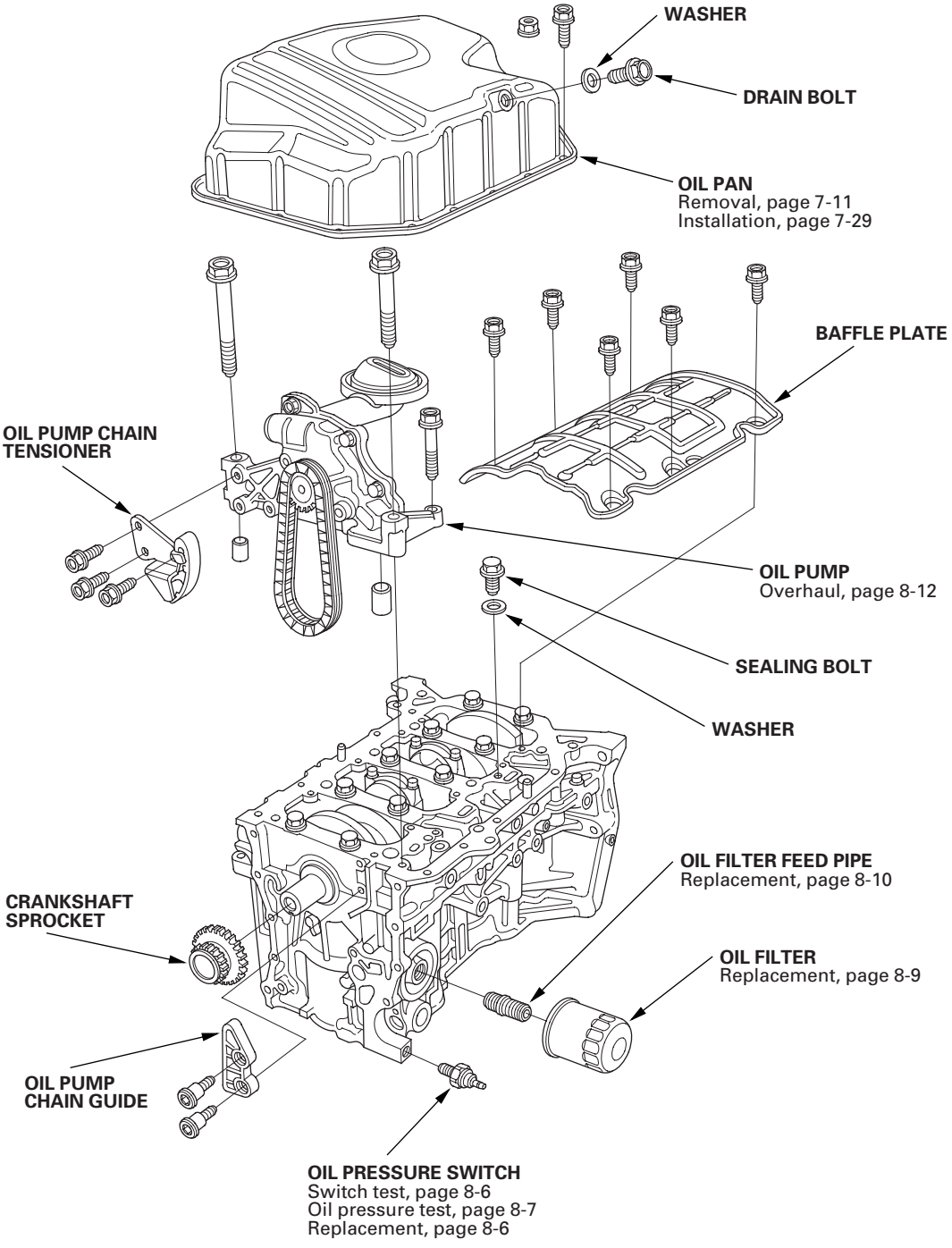

Component Location Index (cont'd)

K20A2, K20Z1 engines

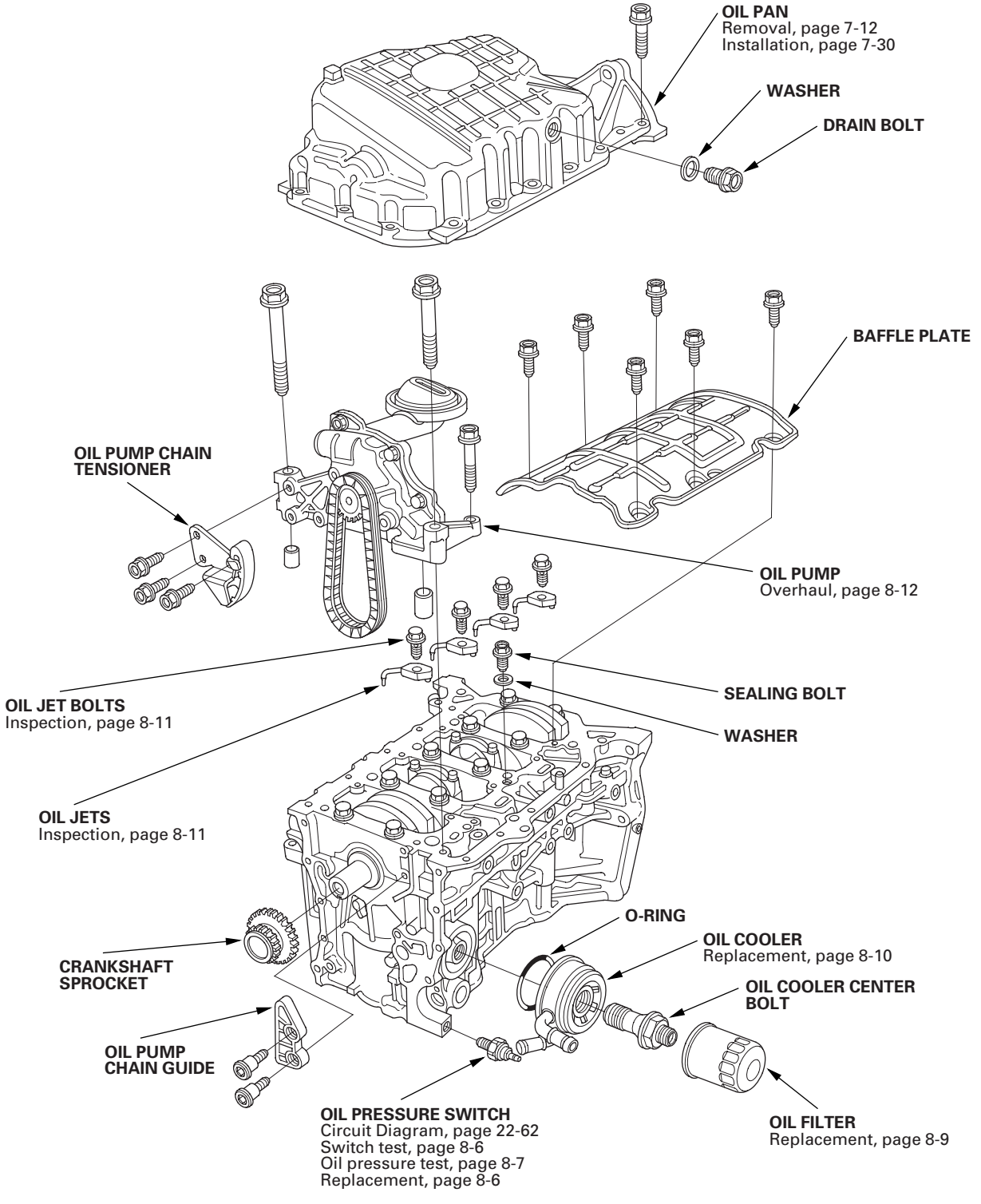

Symptom Troubleshooting Index

Symptom	Diagnostic procedure	Also check for
Excessive engine oil consumption	1. Check the loose of the engine oil fill cap, oil drain bolt, and oil filter. 2. Check for oil leaks. 3. Check for worn valve guide(s) (see page 6-44) or worn valve stem seal(s) (see page 6-44). 4. Check for damaged or worn piston ring(s) (see page 7-22). 5. Check for damaged or worn engine internal parts (cylinder wall, pistons, etc.) (see page 7-16).	
Low oil pressure indicator does not come on with the ignition switch ON (II)	1. Do the gauge assembly self-diagnostic function (see page 22-68). 2. Test the oil pressure switch (see page 8-6).	An open in the wire between the gauge assembly and the oil pressure switch
Low oil pressure indicator stays on	1. Check the engine oil level. 2. Do the gauge assembly self-diagnostic function (see page 22-68). 3. Test the oil pressure switch (see page 8-6). 4. Check the engine oil pressure (see page 8-7). 5. Check the oil filter for clogging. 6. Check the oil screen for clogging. 7. Check the relief valve. 8. Test the oil pump (see page 8-13).	A wire shorted to ground between the gauge assembly and the oil pressure switch

Oil Pressure Switch Test

1. Remove the YEL/RED wire (A) from the engine oil pressure switch (B).

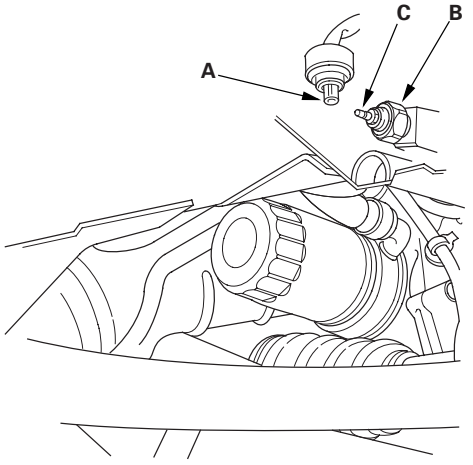

2. Check for continuity between the positive terminal (C) and the engine (ground). There should be continuity with the engine stopped. There should be no continuity with the engine running.

3. If the switch fails to operate, check the engine oil level. If the engine oil level is OK, check the engine oil pressure. If the oil pressure is OK, replace the oil pressure switch (see page 8-6).

Oil Pressure Switch Replacement

1. Disconnect the oil pressure switch connector, then remove the oil pressure switch.

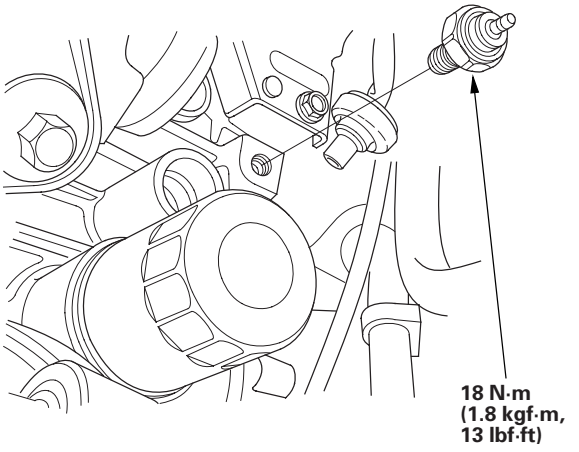

2. Apply liquid gasket to the oil pressure switch threads, then install the oil pressure switch.

   NOTE: Using too much liquid gasket may cause liquid gasket to enter the oil passage or the end of the new oil pressure switch.

Oil Pressure Test

If the low oil pressure indicator stays on with the engine running, check the engine oil level. If the oil level is correct:

1. Remove the engine oil pressure switch, and install an oil pressure gauge (A).

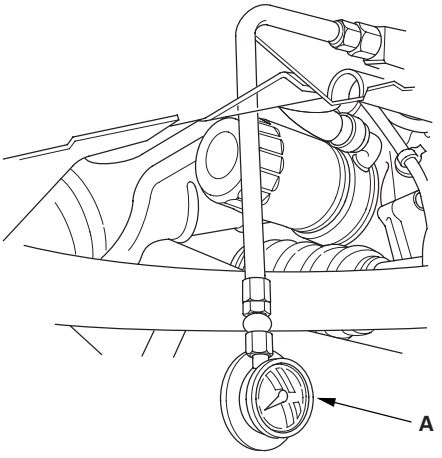

2. Start the engine. Shut it off immediately if the gauge registers no oil pressure. Repair the problem before continuing.

3. Allow the engine to reach operating temperature (fan comes on at least twice). The pressure should be:

   Engine Oil Temperature: 176 °F (80 °C)
   Engine Oil Pressure:
   At Idle: 70 kPa (0.7 kgf/cm^2, 10 psi) min.
   At 3,000 rpm: 300 kPa (3.1 kgf/cm^2, 44 psi) min.

4. If the oil pressure is NOT within specification, inspect these items.

   - Check the oil strainer for clogging.
   - Check the oil pump (see page 8-12).

Engine Oil Replacement

1. Warm up the engine.

2. Remove the drain bolt (A), and drain the engine oil.

   K20A3 engine:

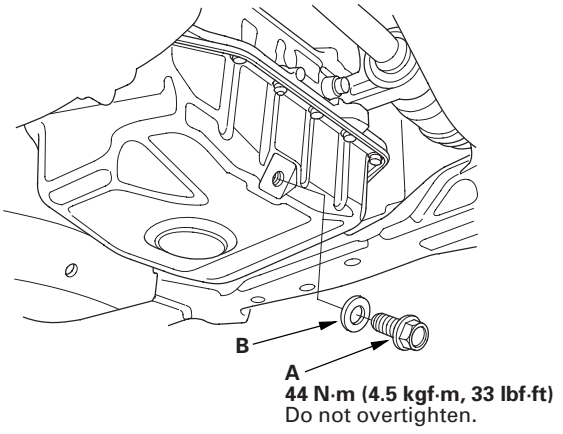

   K20A2, K20Z1 engines:

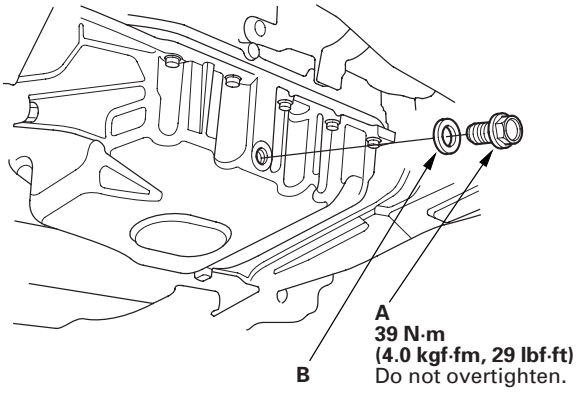

3. Reinstall the drain bolt with a new washer (B).

4. Refill with the recommended oil (see page 3-2).

   Capacity
   K20A3 Engine:
   At Oil Change:
   4.0 L (4.2 US qt)
   At Oil Change Including Filter:
   4.2 L (4.4 US qt)
   After Engine Overhaul:
   5.3 L (5.6 US qt)

   K20A2, K20Z1 Engines:
   At Oil Change:
   4.5 L (4.8 US qt)
   At Oil Change Including Filter:
   4.7 L (5.0 US qt)
   After Engine Overhaul:
   5.8 L (6.1 US qt)

5. Run the engine for more than 3 minutes, then check for oil leakage.

Engine Oil Filter Replacement

Special Tools Required
Oil filter wrench 07HAA-PJ70100

1. Remove the oil filter with the special tool.

2. Inspect the threads (A) and rubber seal (B) on the new filter. Wipe off the seat on the engine block, then apply a light coat of engine oil to the filter rubber seal. Use only filters with a built-in bypass system.

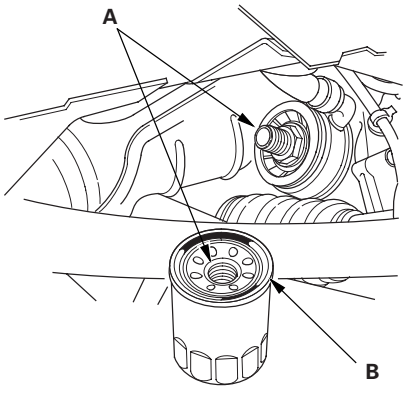

3. Install the oil filter by hand.

4. After the rubber seal seats, tighten the oil filter clockwise with the special tool.

   Tighten: **3/4 turn clockwise**
   Tightening Torque: **12 N·m (1.2 kgf·m, 8.7 lbf·ft)**

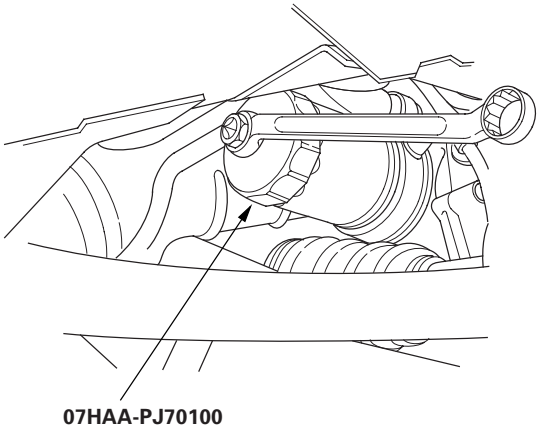

5. If four numbers or marks (1 to 4 or ▼ to ▼▼▼▼) are printed around the outside of the filter, use the following procedure to tighten the filter.

   - Spin the filter on until its seal lightly seats against the block/oil cooler, and note which number or mark is at the bottom.
   - Tighten the filter by turning it clockwise three numbers or marks from the one you noted. For example, if number 2 is at the bottom when the seal is seated, tighten the filter until the number 1 comes around the bottom.

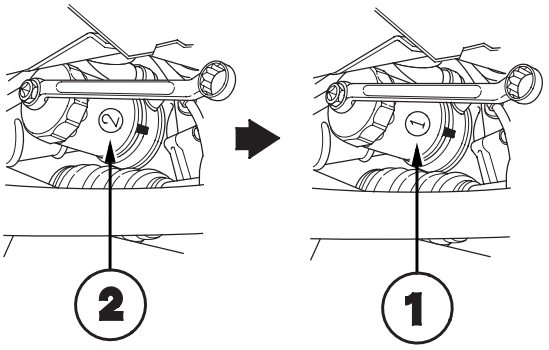

Number when rubber seal is seated. **Number after tightening.**

Number or mark when rubber seal is seated	1 or ▼	2 or ▼▼	3 or ▼▼▼	4 or ▼▼▼▼
Number or mark after tightening	4 or ▼▼▼▼	1 or ▼	2 or ▼▼	3 or ▼▼▼

6. After installation, fill the engine with oil up to the specified level, run the engine for more than 3 minutes, then check for oil leakage.

Oil Filter Feed Pipe Replacement

K20A3 Engine

1. Remove the oil filter (see page 8-9).

2. Remove the oil filter feed pipe.

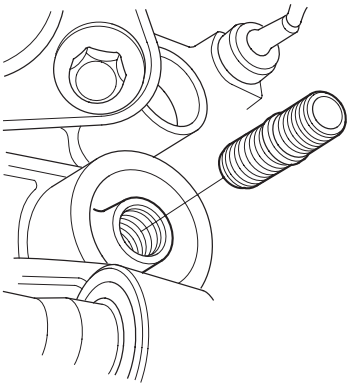

3. Install two 20 x 1.5 mm nuts (A) onto the new oil filter feed pipe. Hold the nut with a wrench, then tighten the other nut.

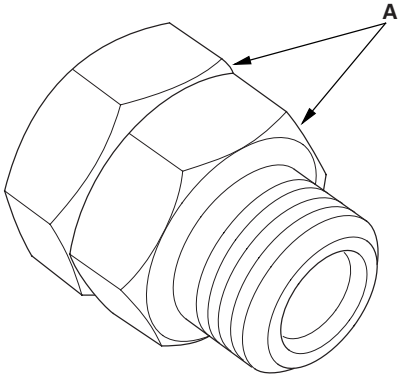

4. Tighten the oil filter feed pipe to the block to 49 N·m (5.0 kgf·m, 36 lbf·ft), then remove the nuts from the oil filter feed pipe.

Oil Cooler Replacement

K20A2, K20Z1 Engines

1. Remove the oil filter (see page 8-9).

2. Remove the oil cooler bypass hoses (A) and oil cooler center bolt (B), then remove the oil cooler (C).

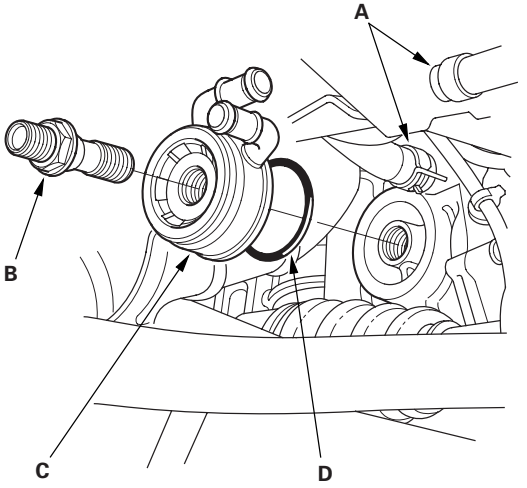

3. Install the oil cooler using a new O-ring (D). Tighten the oil cooler center bolt to 74 N·m (7.5 kgf·m, 54 lbf·ft).

Oil Jet Inspection

K20A2, K20Z1 Engines

1. Remove the oil jet, and inspect it as follows.

   - Make sure that a 1.1 mm (0.04 in.) diameter drill will go through the nozzle hole (A) (1.2 mm (0.05 in.) diameter).
   - Insert the other end of a 1.1 mm (0.04 in.) drill into the oil intake (1.2 mm (0.05 in.) diameter). Make sure the check ball (B) moves smoothly and has a stroke of approximately 4.0 mm (0.16 in.).
   - Check the oil jet operation with an air nozzle. It should take at least 200 kPa (2.0 kgf/cm^2, 28 psi) to unseat the check ball.

     NOTE: Replace the oil jet assembly if the nozzle is damaged or bent.

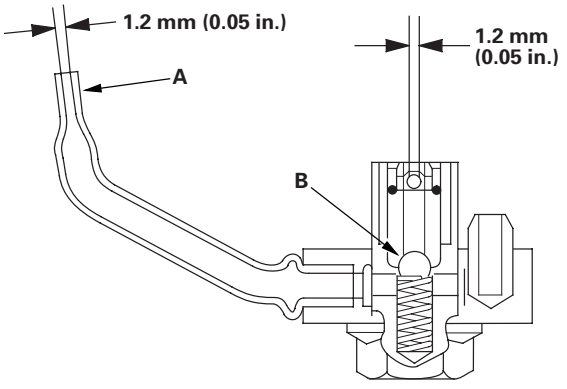

2. Carefully install the oil jet. The mounting torque is critical.

   Torque: 16 N·m (1.6 kgf·m, 12 lbf·ft)

Oil Pump Overhaul

Exploded View

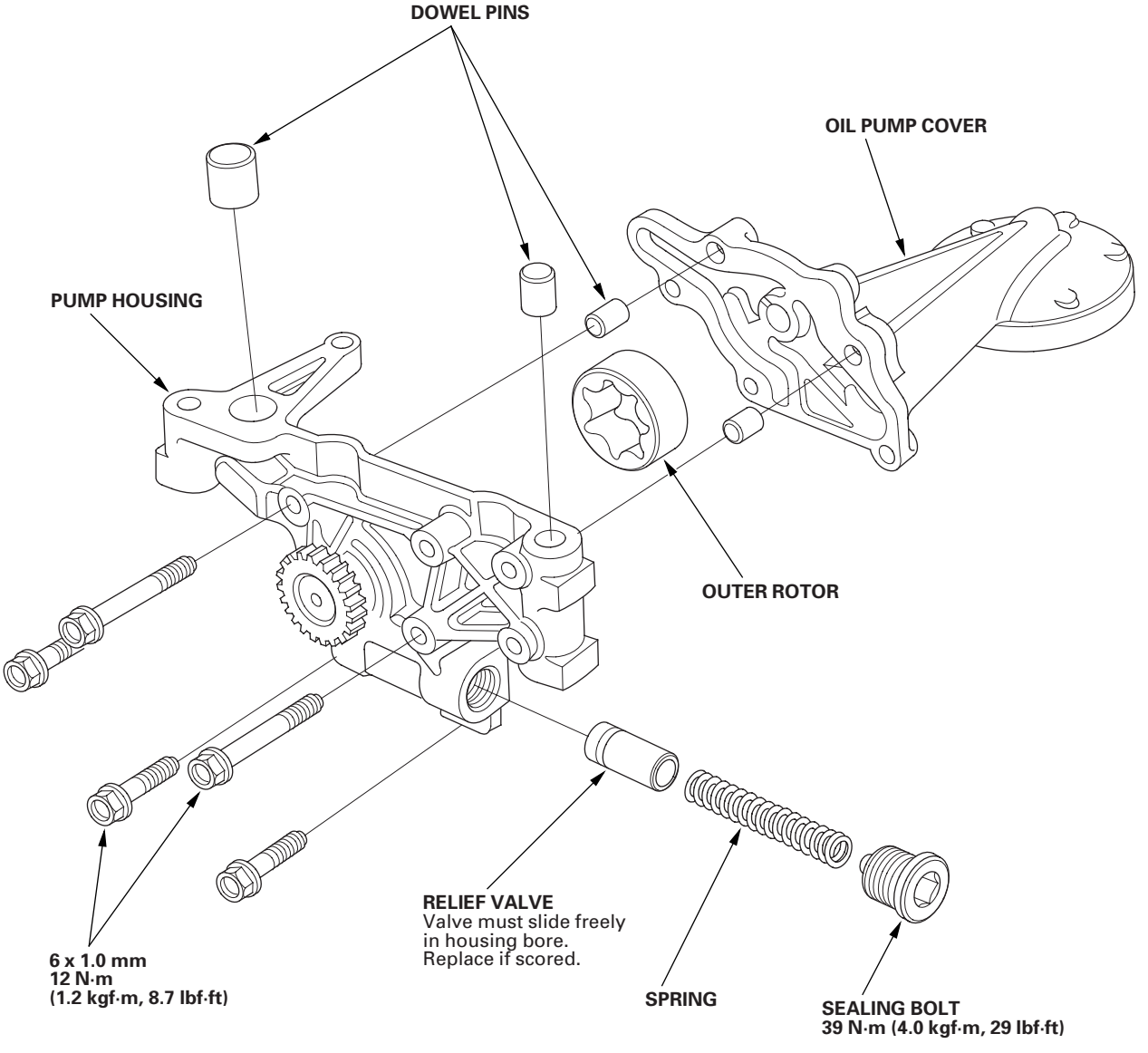

Oil Pump Removal

1. Remove the oil pan (see page 7-11).

2. Remove and discard the oil pump chain tensioner.

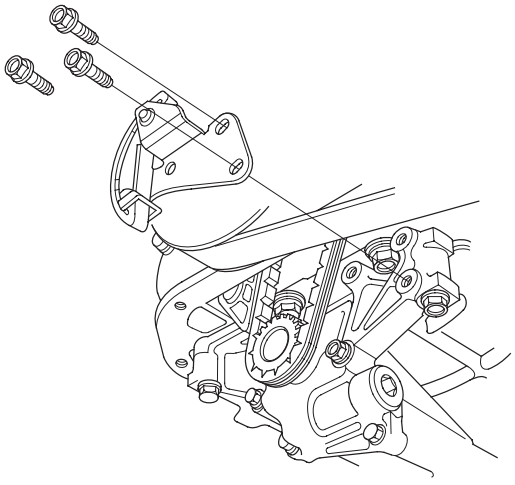

3. Remove the oil pump.

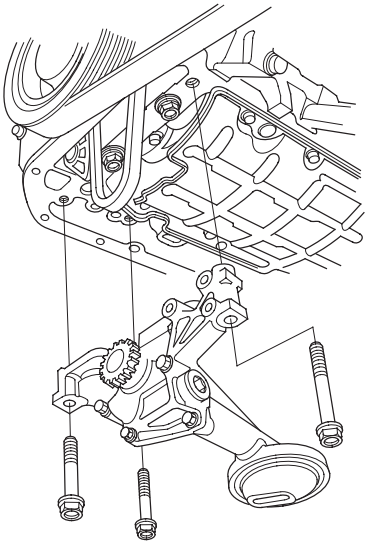

Oil Pump Inspection

1. Remove the pump cover.

2. Check the inner-to-outer rotor radial clearance between the inner rotor (A) and outer rotor (B). If the inner-to-outer rotor radial clearance exceeds the service limit, replace the oil pump.

   Inner Rotor-to-Outer Rotor Radial Clearance
   Standard (New): 0.02—0.15 mm (0.001—0.006 in.)
   Service Limit: 0.20 mm (0.08 in.)

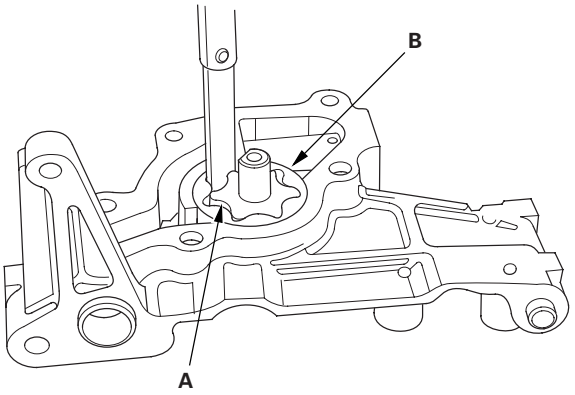

3. Check the housing-to-rotor axial clearance between the rotor (A) and pump housing (B). If the housing-to-rotor axial clearance exceeds the service limit, replace the oil pump.

   Housing-to-Rotor Axial Clearance
   Standard (New): 0.02—0.07 mm (0.001—0.003 in.)
   Service Limit: 0.12 mm (0.005 in.)

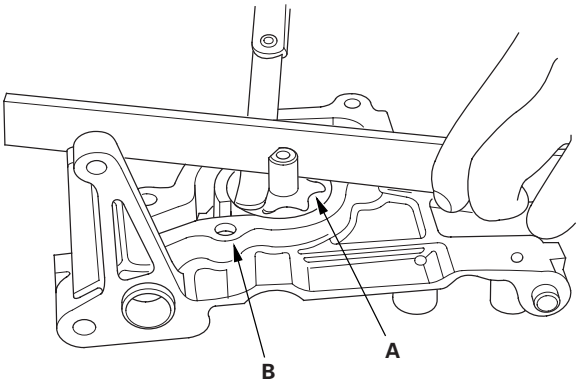

(cont'd)

Oil Pump Overhaul (cont'd)

4. Check the housing-to-outer rotor radial clearance between the outer rotor (A) and pump housing (B). If the housing-to-outer rotor radial clearance exceeds the service limit, replace the oil pump.

   Housing-to-Outer Rotor Radial Clearance
   Standard (New): 0.15—0.21 mm (0.006—0.008 in.)
   Service Limit: 0.23 mm (0.009 in.)

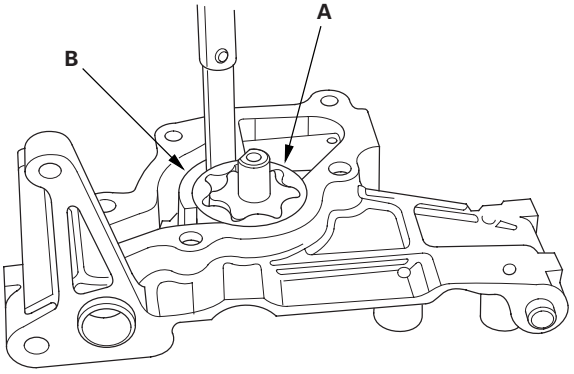

5. Inspect both rotors and the pump housing for scoring or other damage. Replace parts, if necessary.

6. Install the oil pump cover.

Oil Pump Installation

1. Install the oil pump.

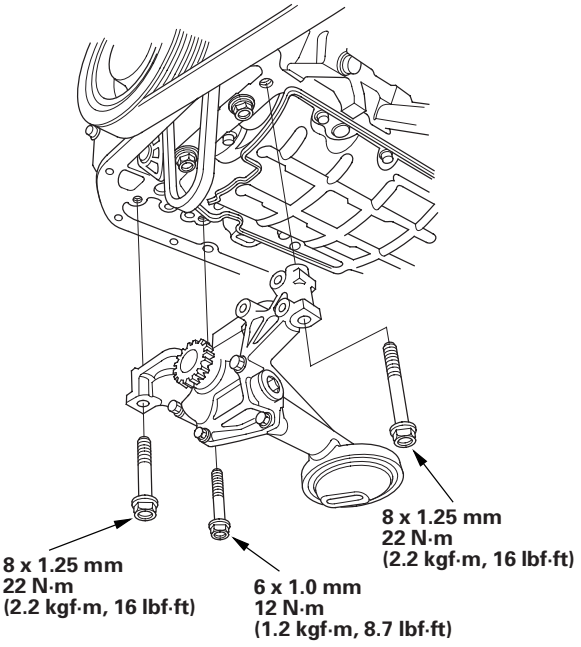

2. Squeeze the new oil pump chain tensioner (A), then install the set clip (B) on it as shown.

   NOTE: The set clip is supplied with the oil pump chain tensioner.

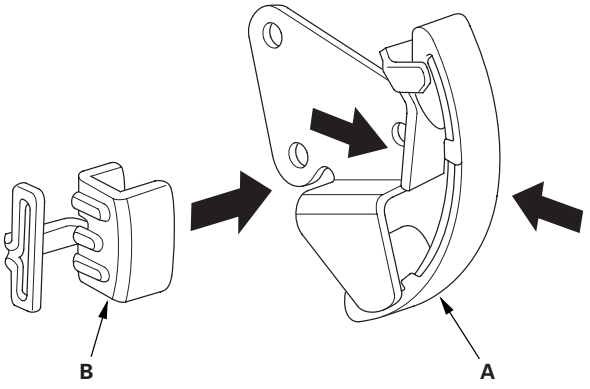

3. Install the oil pump chain tensioner.

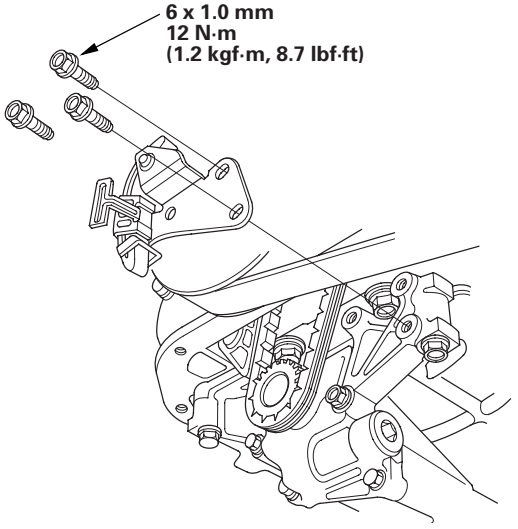

4. Remove the set clip from the oil pump chain tensioner.

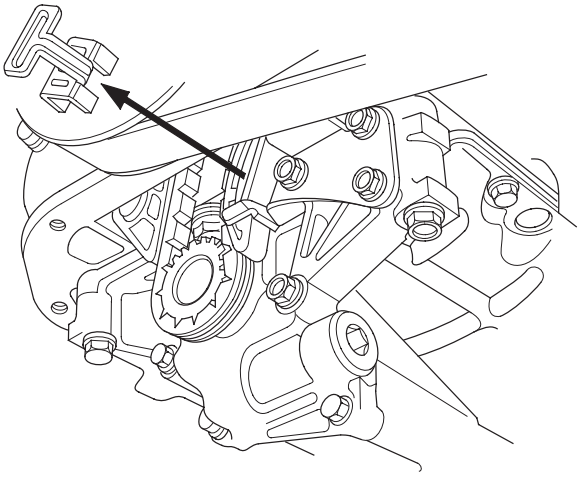

5. Install the oil pan (see page 7-29).

Engine Mechanical

Intake Manifold and Exhaust System

Intake Manifold Removal and Installation
K20A3 Engine 9-2
K20A2, K20Z1 Engines 9-8
Exhaust Manifold Removal and Installation 9-14
Exhaust Pipe and Muffler Replacement 9-15
Flexible Joint Gasket Replacement 9-16

Intake Manifold Removal and Installation

Exploded View - K20A3 Engine

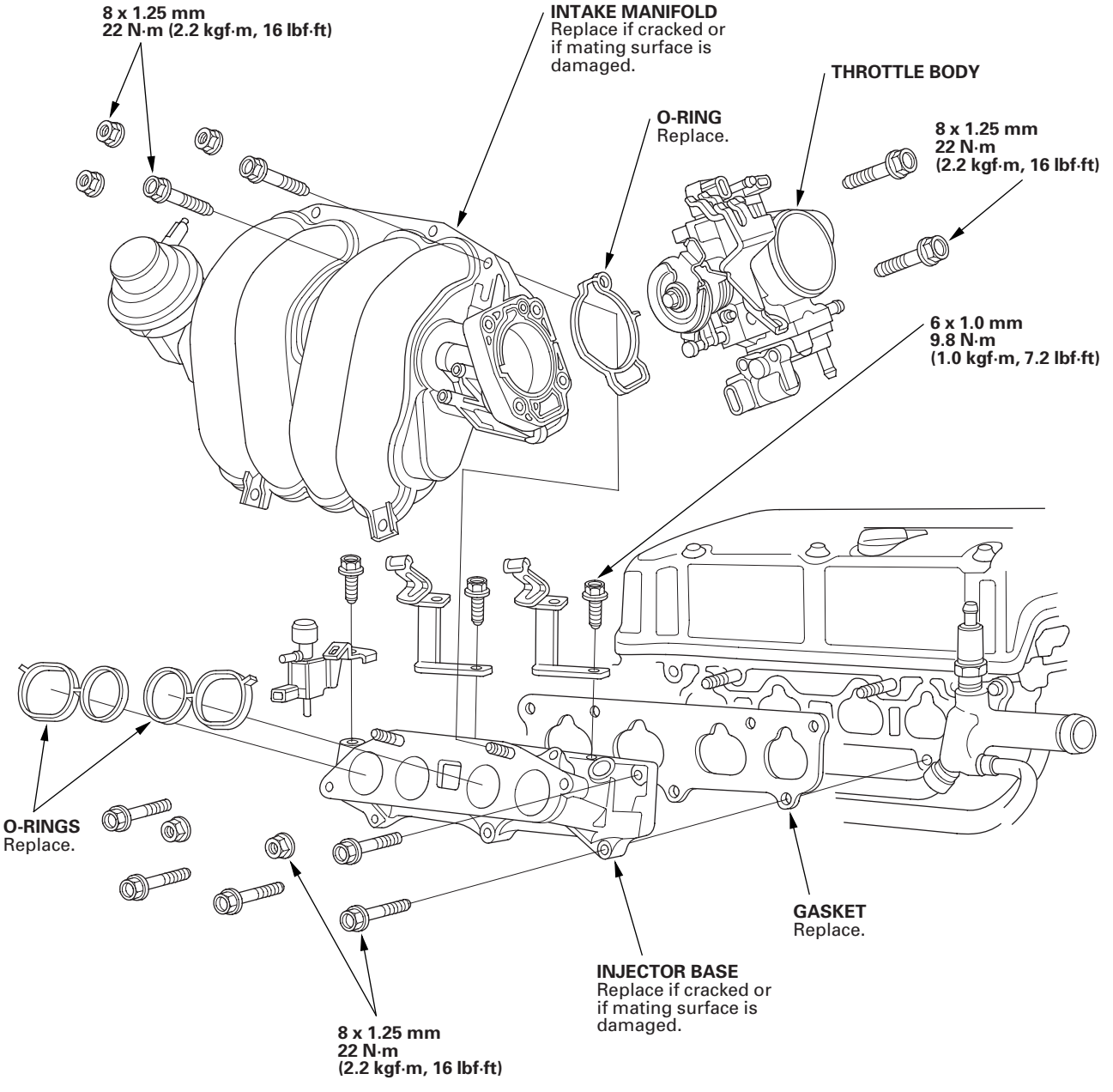

Removal - K20A3 Engine

1. Remove the intake manifold cover.

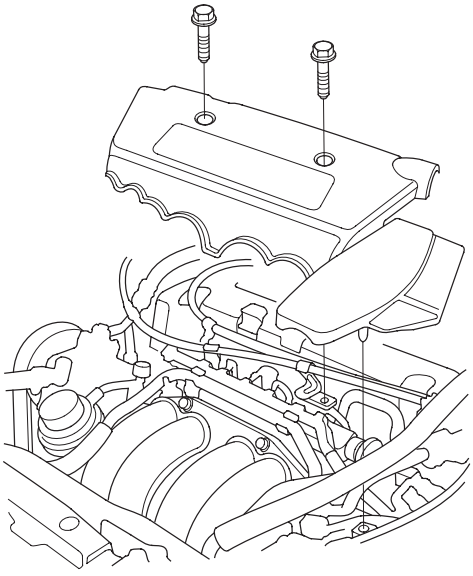

2. Disconnect the intake air temperature (IAT) sensor connector (A), and remove the breather hose (B), then remove the air cleaner housing (C).

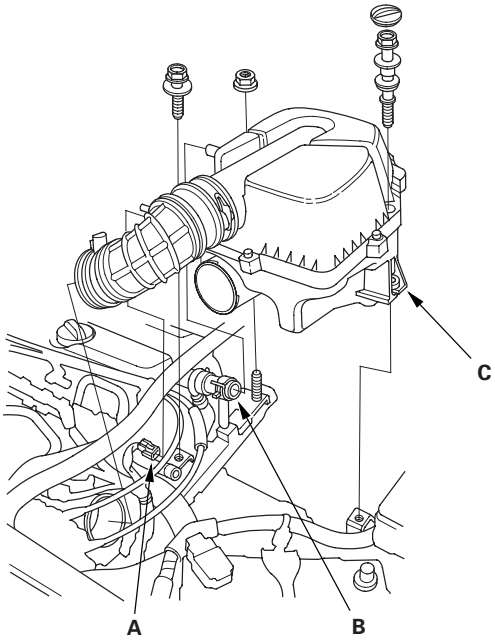

3. Remove the throttle cover (A). Fully open the throttle link and cruise control link by hand, then remove the throttle cable (B) and cruise control actuator cable (C) from the links. Loosen the locknuts (D), and remove the cables from the bracket.

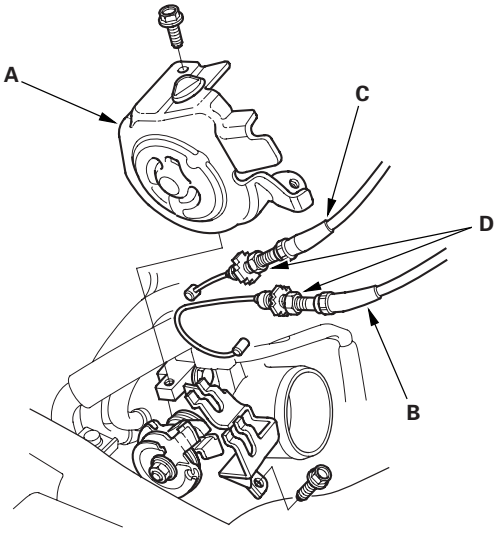

4. Remove the evaporative emission (EVAP) canister hose (A) and brake booster vacuum hose (B).

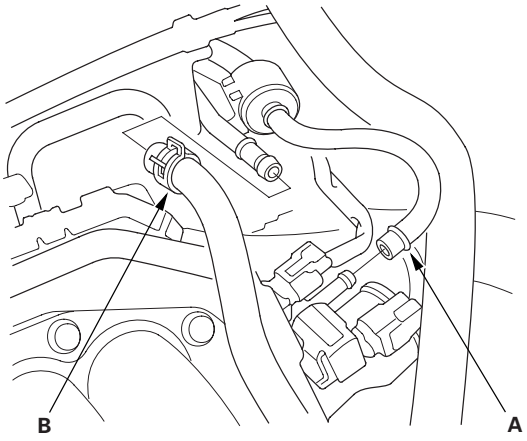

(cont'd)

Intake Manifold Removal and Installation (cont'd)

5. Remove the water bypass hoses, then plug the water bypass hoses.

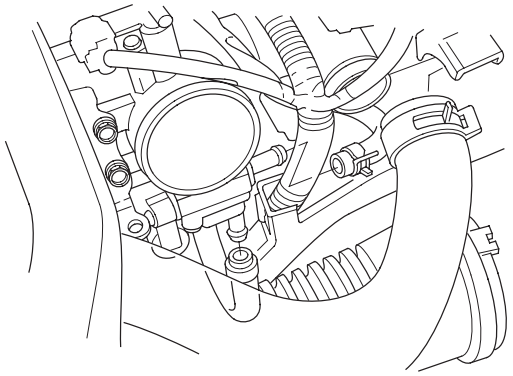

6. Disconnect the intake manifold tuning (IMT) (intake manifold runner control (IMRC)) valve actuator control solenoid valve connector (A), then remove the positive crankcase ventilation (PCV) hose (B) and IMT (IMRC) valve control solenoid valve mounting bolt (C).

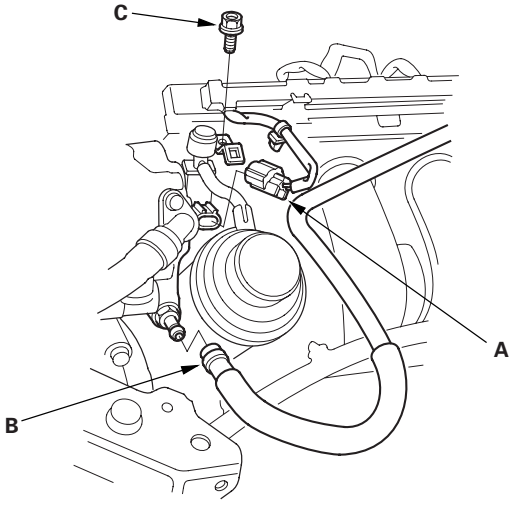

7. Remove the front bumper (see page 20-90).

8. Disconnect the hood switch connector (A), then remove the air conditioning (A/C) line bracket mounting bolt (B), intake air duct mounting bolt (C), and harness clamps (D).

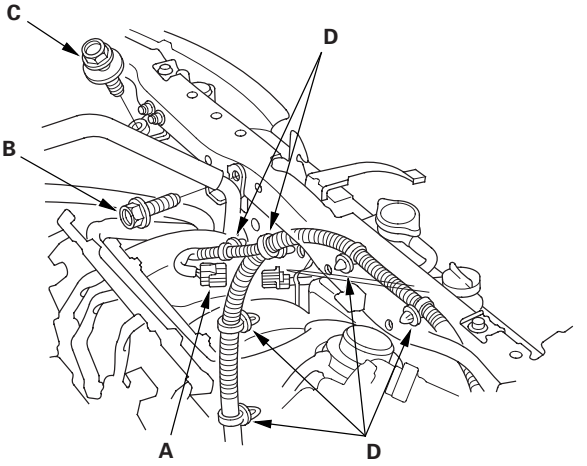

9. Remove the upper bracket and cushion mounting bolts (A), then remove the bulkhead (B).

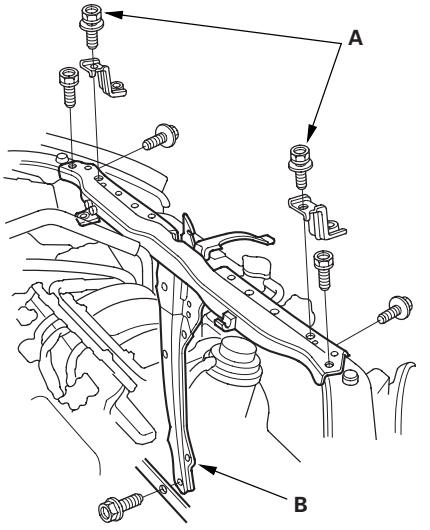

10. Remove the engine wire harness connectors and wire harness clamps from the intake manifold.

    - Idle air control (IAC) valve connector
    - Throttle position (TP) sensor connector
    - Manifold absolute pressure (MAP) sensor connector
    - Evaporative emission (EVAP) canister purge valve connector
    - Intake manifold tuning (IMT) (Intake manifold runner control (IMRC)) valve position sensor connector

11. Remove the intake manifold.

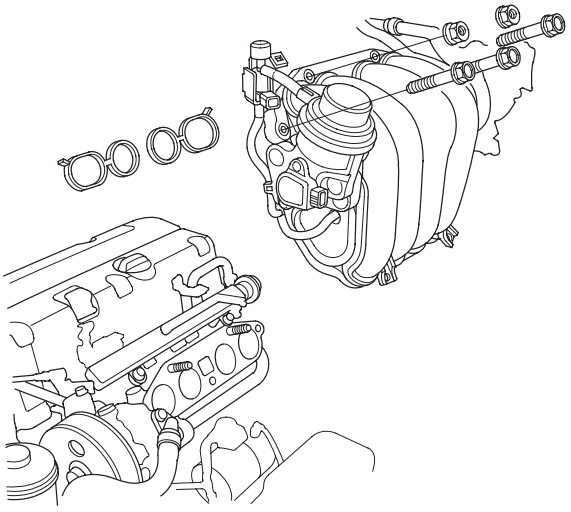

Installation - K20A3 Engine

1. Install the intake manifold (A), and tighten the bolts/nuts in a crisscross pattern in two or three steps, beginning with the inner bolt. Use new O-rings (B).

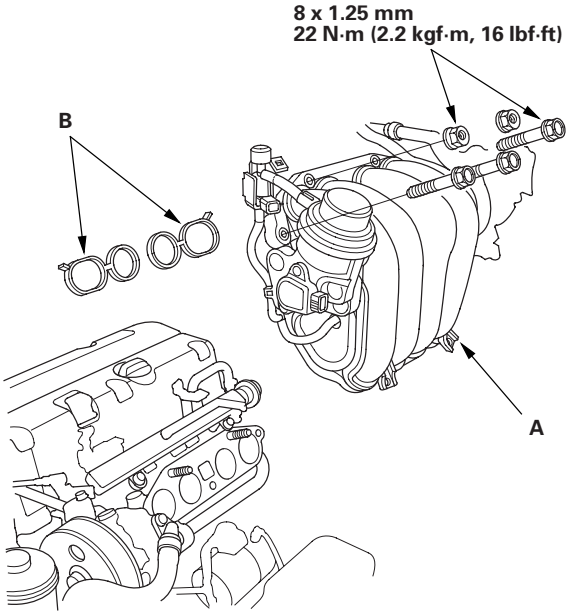

2. Install the bulkhead (A), then install the upper bracket and cushion mounting bolts (B).

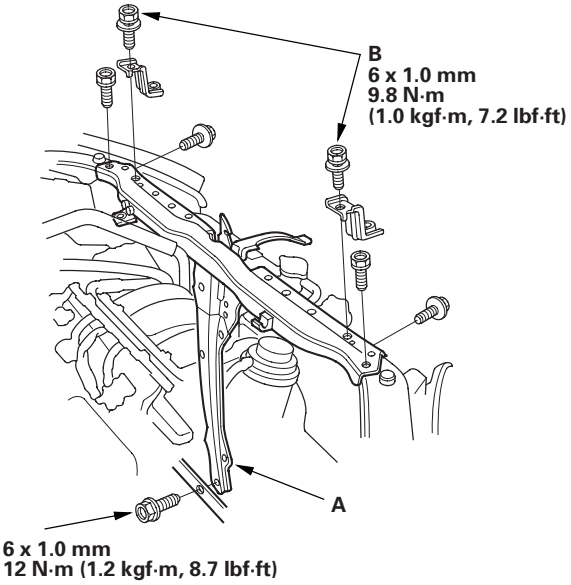

(cont'd)

Intake Manifold Removal and Installation (cont'd)

3. Connect the hood switch connector (A), then install the A/C line bracket mounting bolt (B), intake air duct mounting bolt (C) and harness clamps (D).

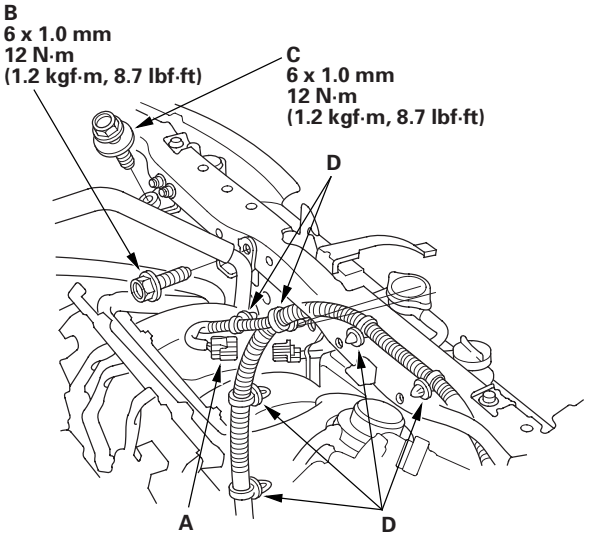

4. Install the front bumper (see page 20-90).

5. Connect the IMT (IMRC) valve actuator control solenoid valve connector (A), then install the PCV hose (B) and IMT (IMRC) valve actuator control solenoid valve mounting bolt (C).

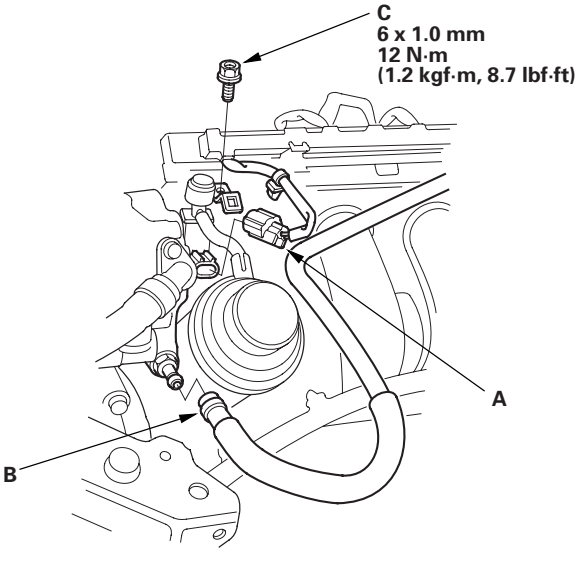

6. Install the water bypass hoses.

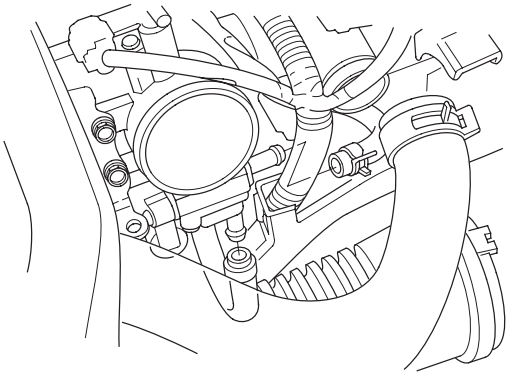

7. Install the EVAP canister hose (A) and brake booster vacuum hose (B).

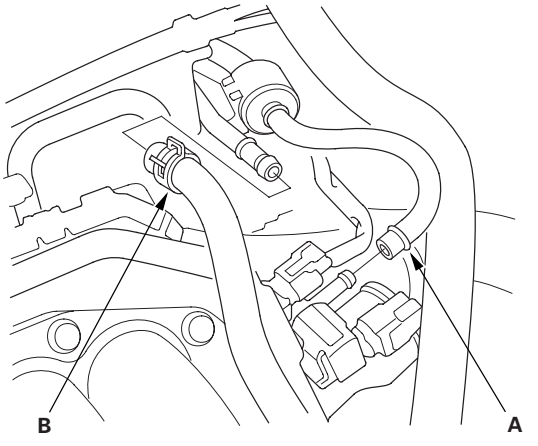

8. Install the throttle cable (see page 11-409), then adjust it (see page 11-408).

9. Install the cruise control actuator cable, then adjust it (see page 4-71).

10. Install the air cleaner housing (A) and connect the IAT sensor connector (B).

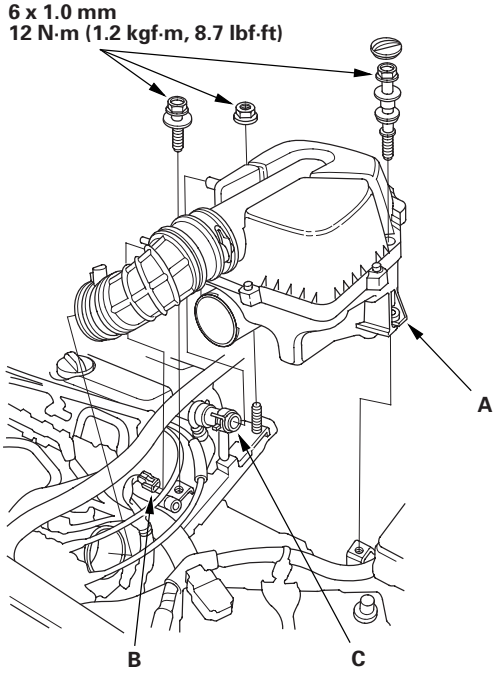

11. Install the breather hose (C).

12. Install the intake manifold cover.

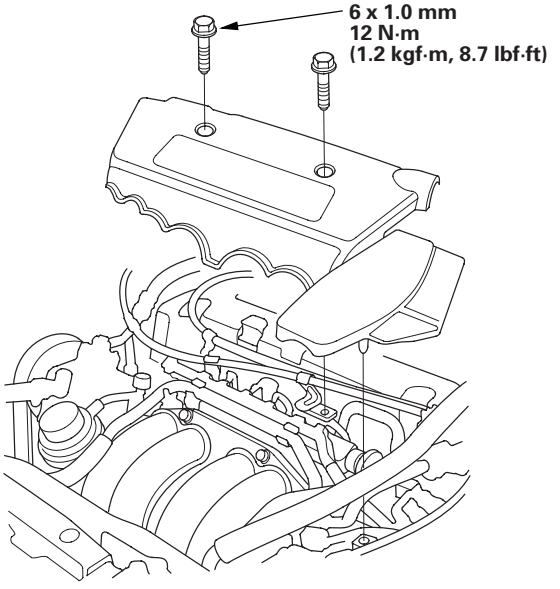

13. After installation, check that all tubes, hoses, and connectors are installed correctly.

14. Refill the radiator with engine coolant, and bleed air from the cooling system with the heater valve open (see step 7 on page 10-7).

15. Clean up any spilled engine coolant.

Intake Manifold Removal and Installation (cont'd)

Exploded View - K20A2, K20Z1 Engines

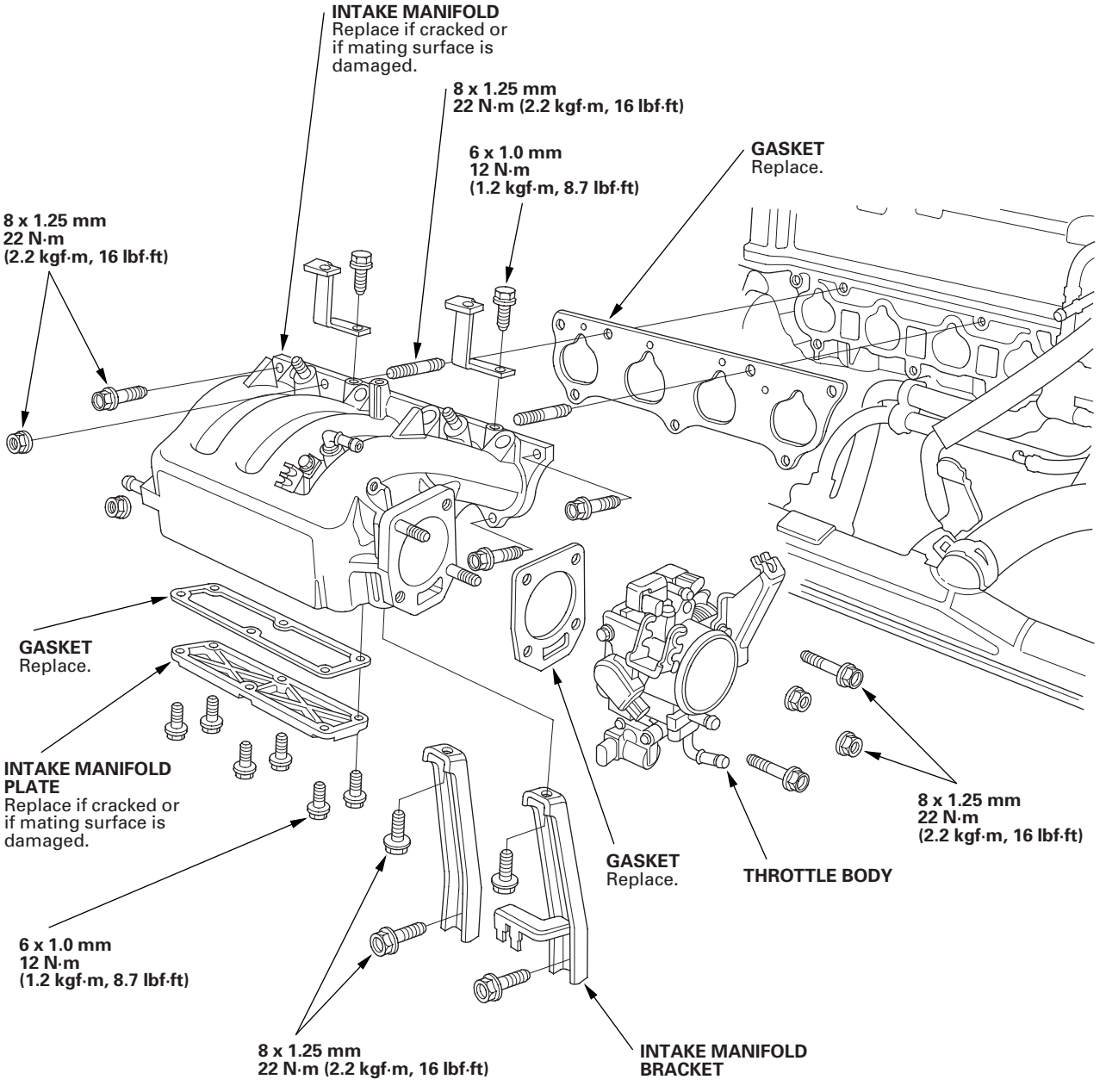

Removal - K20A2, K20Z1 Engines

1. Relieve fuel pressure (see page 11-360).

2. Remove the intake manifold cover.

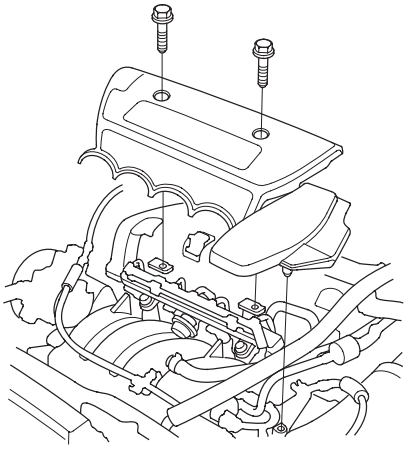

3. Remove the EVAP canister hose (A), brake booster vacuum hose (B), and vacuum hoses (C).

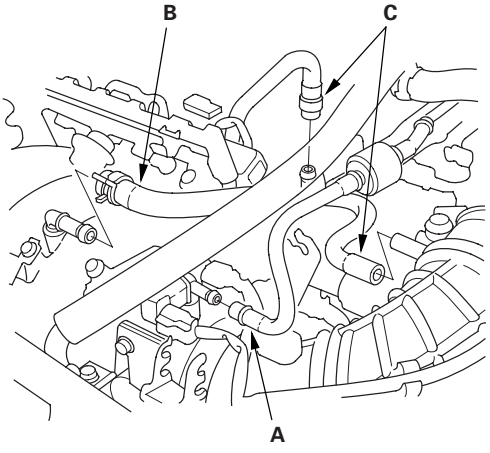

4. Disconnect the IAT sensor connector (A), and remove the breather hose (B), then remove the air cleaner housing (C).

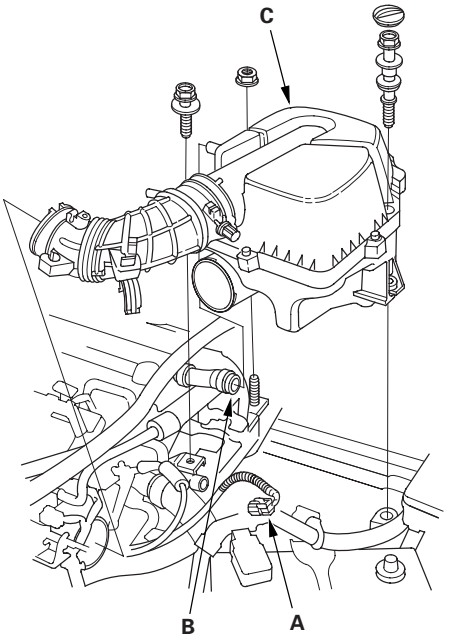

(cont'd)

Intake Manifold Removal and Installation (cont'd)

5. Fully open the throttle link and cruise control link by hand, then remove the throttle cable (A) and cruise control actuator cable (B) from the links. Loosen the locknuts (C), and remove the cables from the bracket.

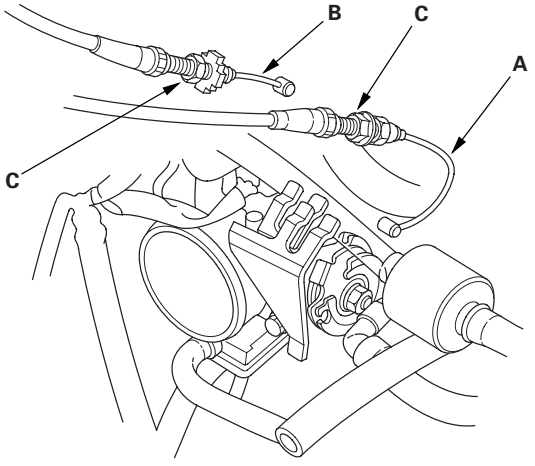

6. Remove the water bypass hoses, then plug the water bypass hoses.

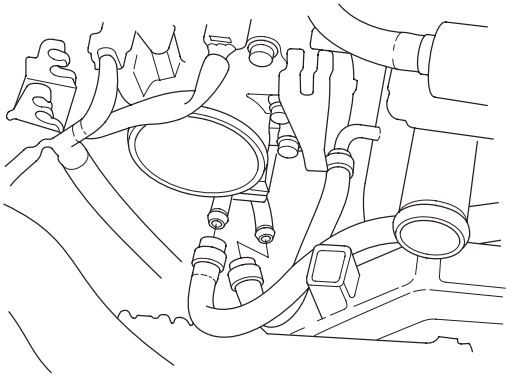

7. Remove the fuel feed hose (see page 11-369).

8. Remove the PCV hose (A), harness holder mounting bolt (B), and harness clamp mounting bolt (C).

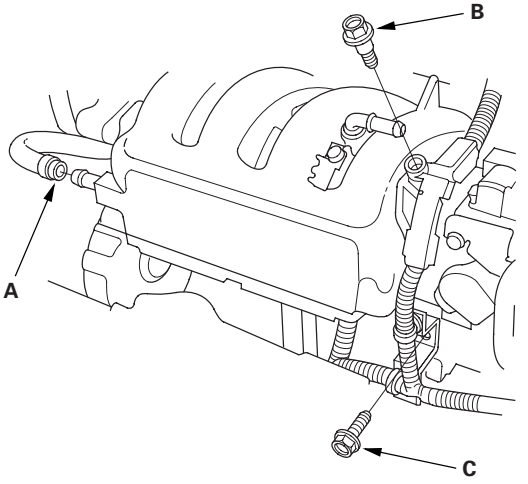

9. Remove the engine wire harness connectors and wire harness clamps from the intake manifold.

   - Four injector connectors
   - IAC valve connector
   - TP sensor connector
   - MAP sensor connector
   - EVAP canister purge valve connector

10. Remove the two bolts securing the intake manifold and brackets.

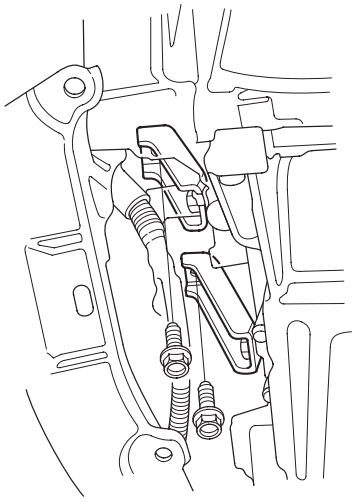

11. Remove all the intake manifold mounting bolts/nuts (A).

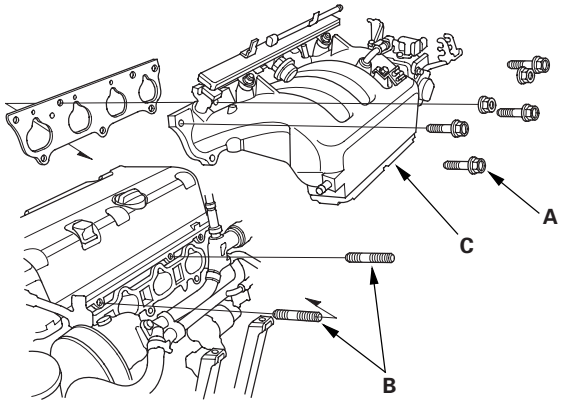

12. Remove the two stud bolts (B), then remove the intake manifold (C).

Installation - K20A2, K20Z1 Engines

1. Install the intake manifold (A) with a new gasket (B), then tighten the two stud bolts (C).

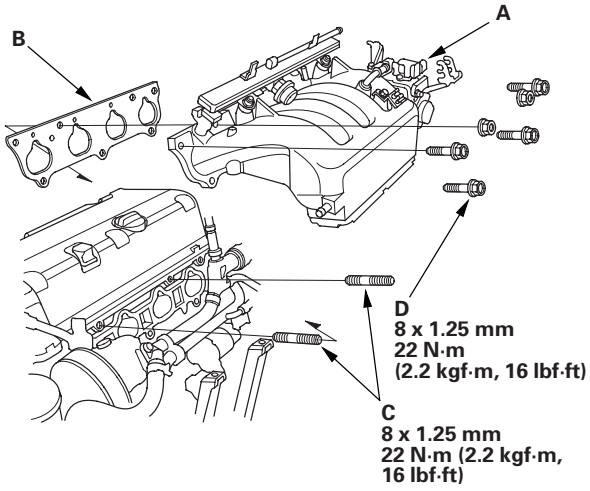

2. Tighten all intake manifold mounting bolts/nuts (D) in a crisscross pattern in two or three steps, beginning with the inner bolt.

3. Tighten the two bolts securing the intake manifold and brackets.

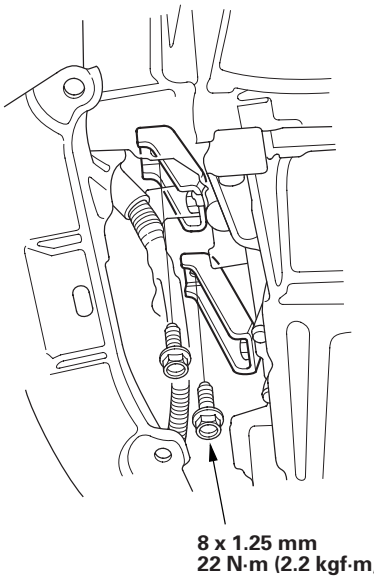

(cont'd)

Intake Manifold Removal and Installation (cont'd)

4. Install the PCV hose (A), harness holder mounting bolt (B), and harness clamp mounting bolt (C).

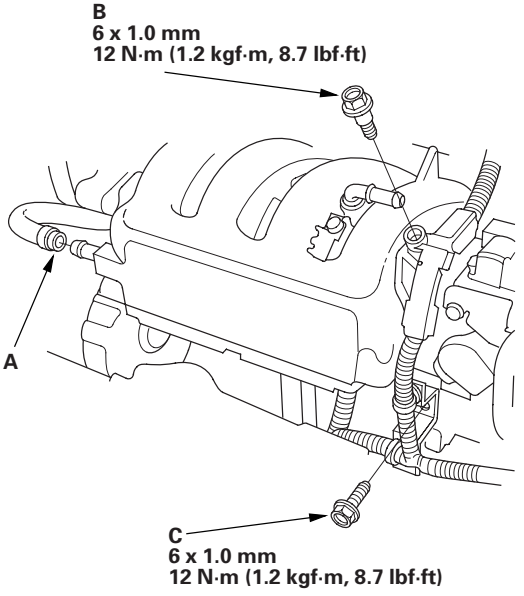

5. Install the fuel feed hose (see page 11-370).

6. Install the water bypass hoses.

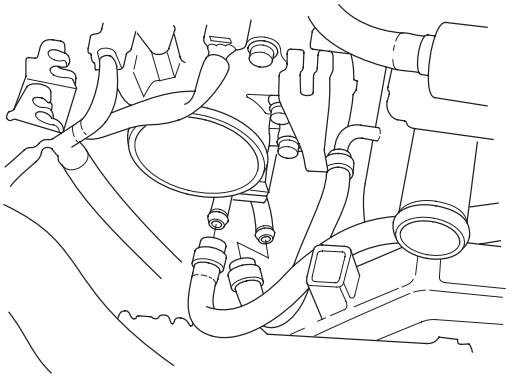

7. Install the throttle cable (see page 11-409), then adjust it (see page 11-408).

8. Install the cruise control actuator cable, then adjust it (see page 4-71).

9. Install the air cleaner housing (A) and connect the IAT sensor connector (B).

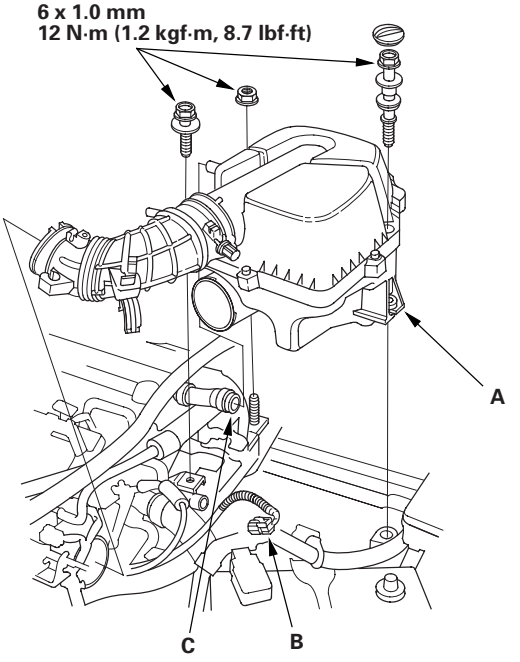

10. Install the breather hose (C).

11. Install the EVAP canister hose (A), brake booster vacuum hose (B), and vacuum hoses (C).

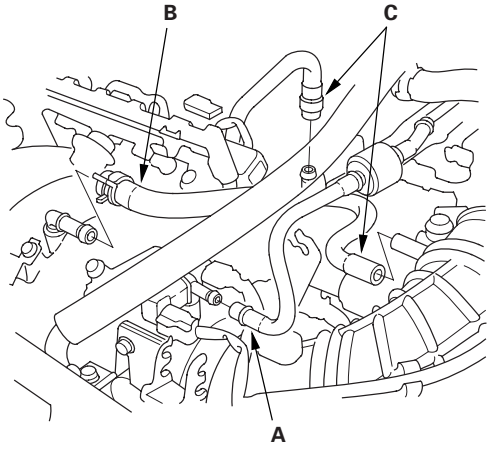

12. Install the intake manifold cover.

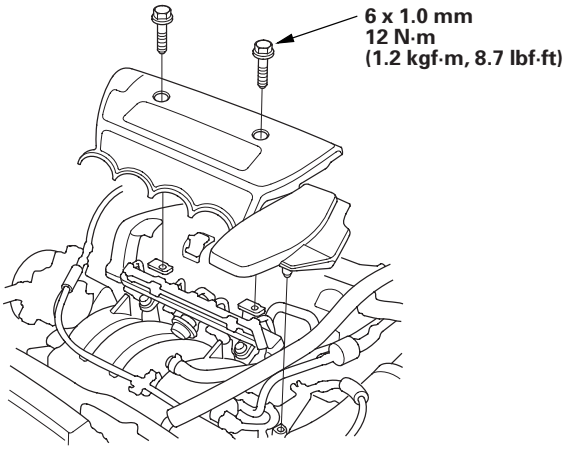

13. After installation, check that all tubes, hoses, and connectors are installed correctly.

14. Inspect for fuel leaks. Turn the ignition switch ON (II) (do not operate the starter) so that the fuel pump runs for about 2 seconds and pressurizes the fuel line. Repeat this operation two or three times, then check for fuel leakage at any point in the fuel line.

15. Refill the radiator with engine coolant, and bleed air from the cooling system with the heater valve open (see step 7 on page 10-7).

16. Clean up any spilled engine coolant.

Exhaust Manifold Removal and Installation

1. Remove the rocker arm oil control solenoid (VTEC solenoid valve) (see page 11-324).

2. Remove the intermediate shaft cover (see step 36 on page 14-278).

3. Remove the cover and exhaust manifold bracket, then remove the exhaust manifold.

   NOTE: With a 2005-2006 models, do not reuse the flexible joint gasket, when removing it. Check the flexible joint gasket for damage. If the flexible joint gasket is damaged, replace the flexible joint gasket (see page 9-16).

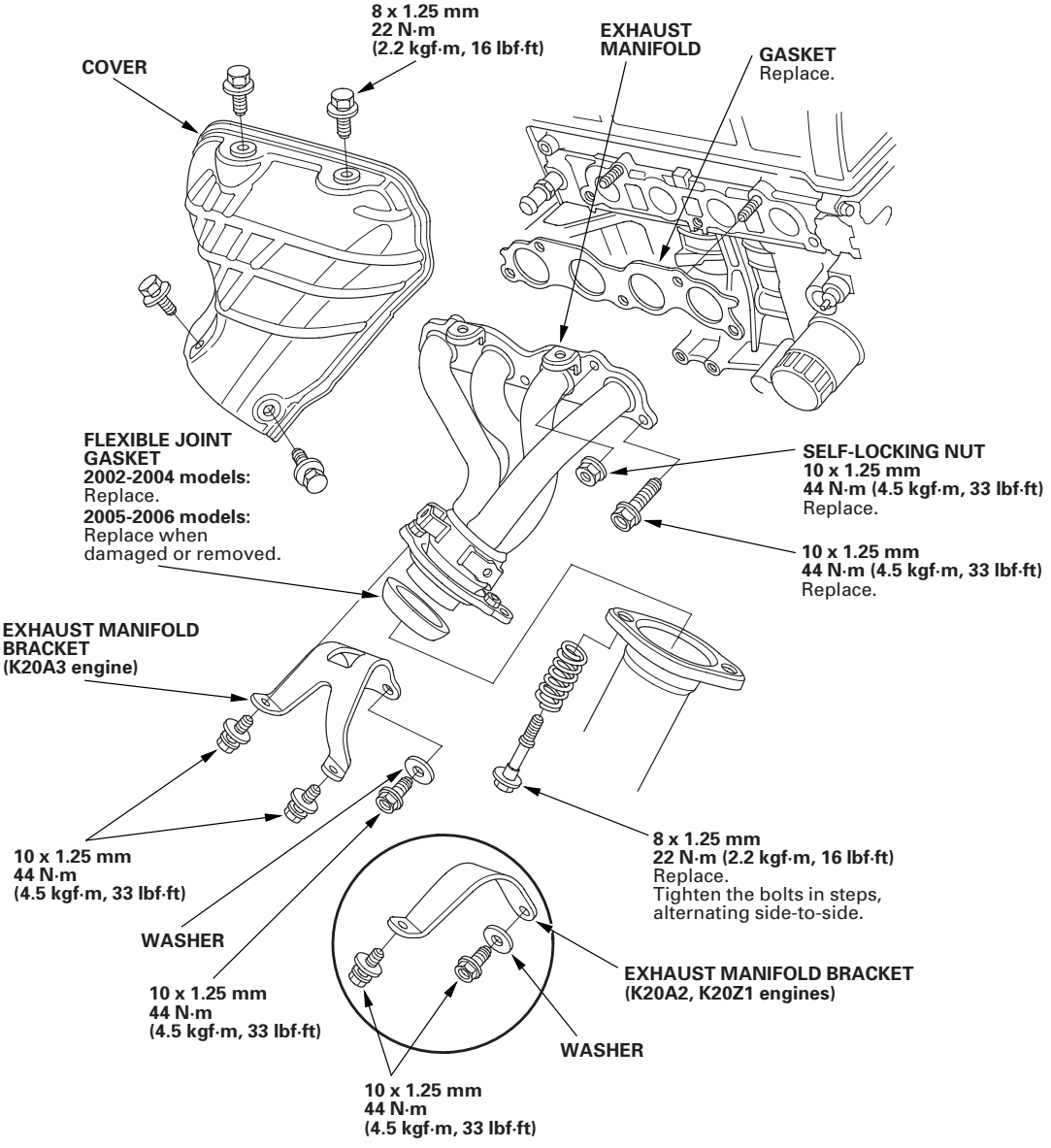

4. Install the exhaust manifold and tighten the bolts/nuts in a crisscross pattern in two or three steps, beginning with the inner bolt.

5. Install the other parts in the reverse order of removal.

Exhaust Pipe and Muffler Replacement

NOTE:
- Use new gaskets and self-locking nuts when reassembling.
- With a 2005-2006 models, do not reuse the flexible joint gasket, when removing it. Check the flexible joint gasket for damage. If the flexible joint gasket is damaged, replace the flexible joint gasket (see page 9-16).

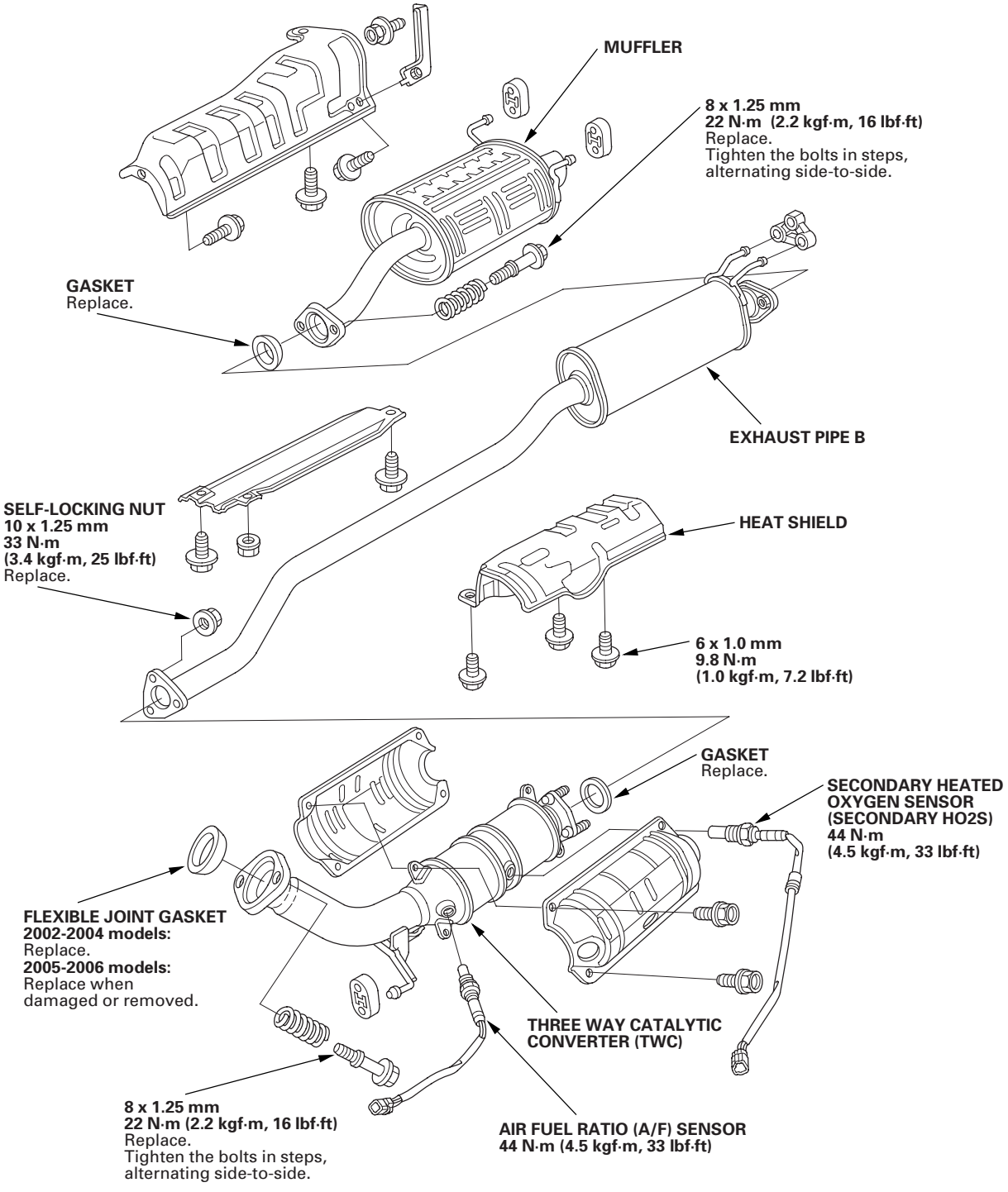

Flexible Joint Gasket Replacement

2005-2006 Models

1. Disconnect the air fuel ratio (A/F) sensor connector and secondary heated oxygen sensor (secondary HO2S) connector, then remove the three way catalytic converter (TWC) assembly (see step 28 on page 5-6).

2. Check the flexible joint gasket for damage. If the flexible joint gasket is damaged, remove the flexible joint gasket.

3. Using the wooden block (A) and plastic mallet (B), gently tap in the new flexible joint gasket until the gasket bottoms on the exhaust manifold flange.

   NOTE:
   - When installing the flexible joint gasket, flat side is facing the exhaust manifold flange.
   - Do not reuse the flexible joint gasket, when removing it.
   - Do not install the TWC to the exhaust manifold, before flexible joint gasket is seated properly.
   - Take care not to damage the sliding surface of the flexible joint gasket.

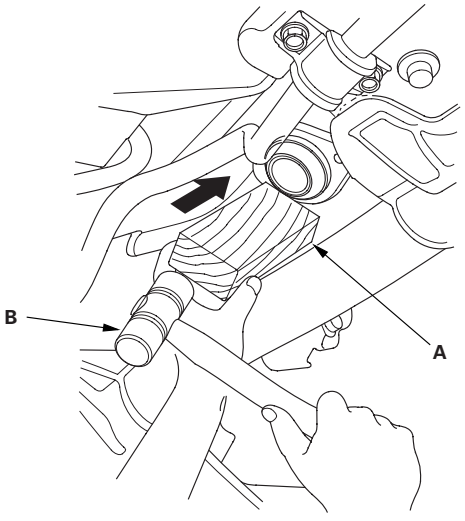

4. Using the 0.05 mm (0.002 in.) feeler gauge, check the flexible joint gasket properly seated on the exhaust manifold flange.

5. Visually check the flexible joint gasket for damage, if a damaged or loosen string is dedetected, replace the flexible joint gasket.

6. Install the TWC assembly, then connect the A/F sensor connector and secondary HO2S connector (see step 20 on page 5-15).

Engine Cooling

Cooling System

Component Location Index 10-2
Radiator Cap Test 10-3
Radiator Test 10-3
Fan Motor Test 10-4
Thermostat Test 10-4
Water Pump Inspection 10-5
Water Pump Replacement 10-5
Coolant Check 10-6
Coolant Replacement 10-6
Thermostat Replacement 10-8
Water Passage Replacement 10-9
Water Outlet Replacement 10-11
Radiator and Fan Replacement 10-12

Fan Controls

Component Location Index 10-13
Symptom Troubleshooting Index 10-14
Circuit Diagram 10-15
Radiator Fan Circuit Troubleshooting 10-16
Radiator Fan Switch Circuit Troubleshooting (Open) 10-18
Radiator Fan Switch Circuit Troubleshooting (Short) 10-18
Radiator Fan Switch Test 10-19
Radiator Fan Switch Replacement 10-19

Component Location Index

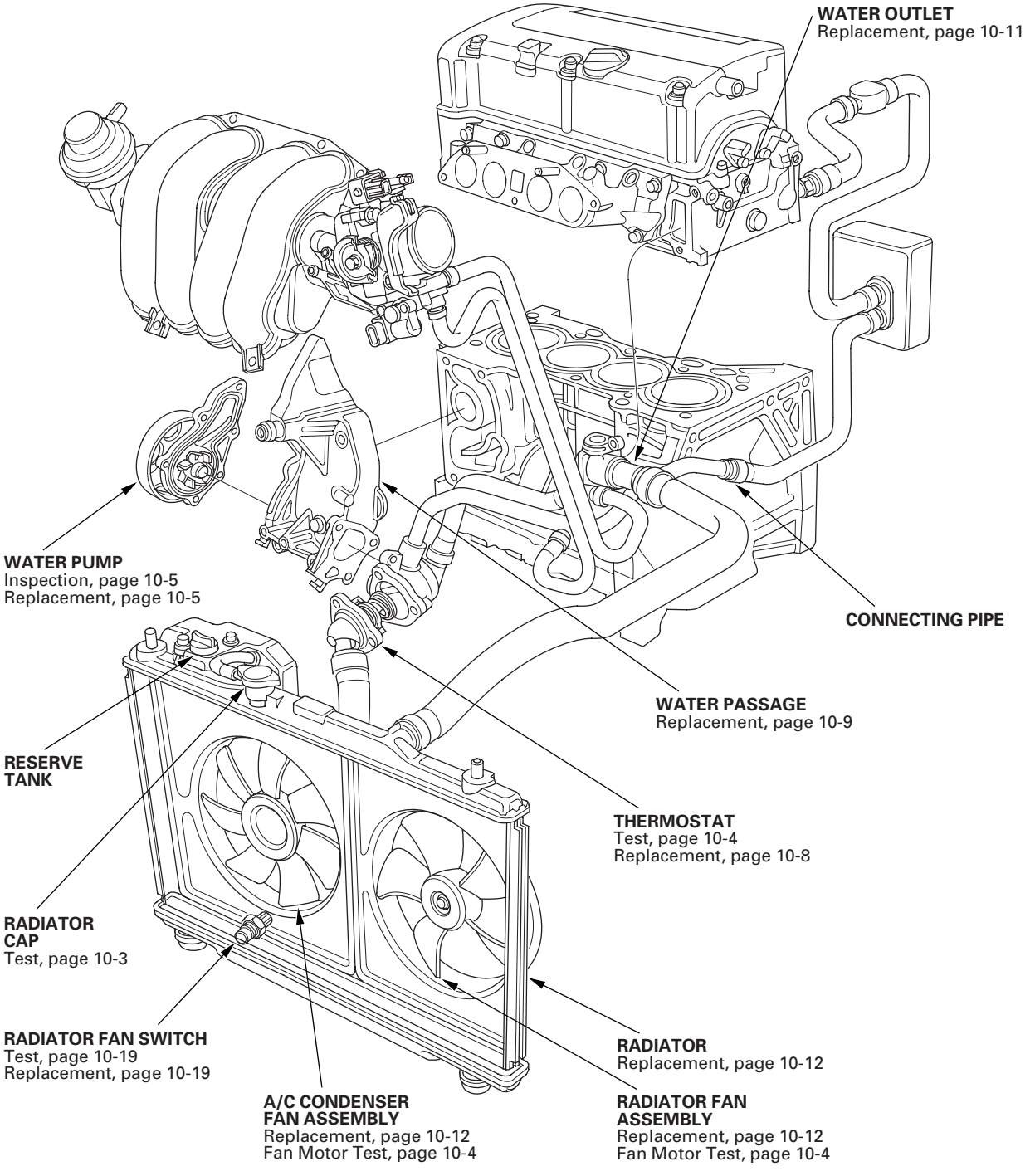

Radiator Cap Test

1. Remove the radiator cap (A), wet its seal with engine coolant, then install it on the pressure tester (B) (commercially available).

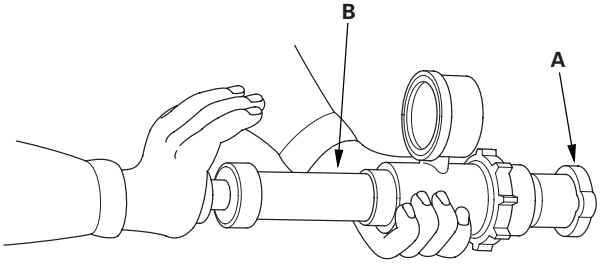

2. Apply a pressure of 93—123 kPa (0.95—1.25 kgf/cm^2, 14—18 psi).
3. Check for a drop in pressure.
4. If the pressure drops, replace the cap.

Radiator Test

1. Wait until the engine is cool, then carefully remove the radiator cap and fill the radiator with engine coolant to the top of the filler neck.
2. Attach the pressure tester (A) (commercially available) to the radiator.

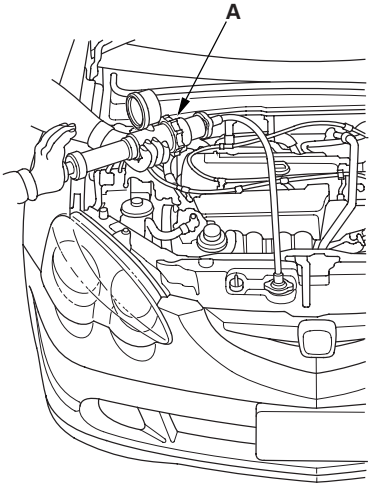

3. Apply a pressure of 93—123 kPa (0.95—1.25 kgf/cm^2, 14—18 psi).
4. Inspect for engine coolant leaks and a drop in pressure.
5. Remove the tester, and reinstall the radiator cap.
6. Check for engine oil in the coolant and/or coolant in the engine oil.

Fan Motor Test

1. Disconnect the 2P connectors from the radiator fan motor and condenser fan motor.

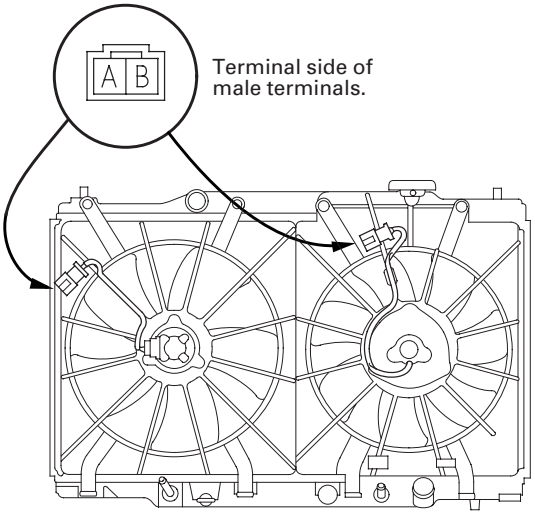

2. Test the motor by connecting battery power to the B terminal and ground to the A terminal.

3. If the motor fails to run or does not run smoothly, replace it (see page 10-12).

Thermostat Test

Replace the thermostat if it is open at room temperature.

To test a closed thermostat:

1. Suspend the thermostat (A) in a container of water. Do not let the thermometer (B) touch the bottom of the hot container.

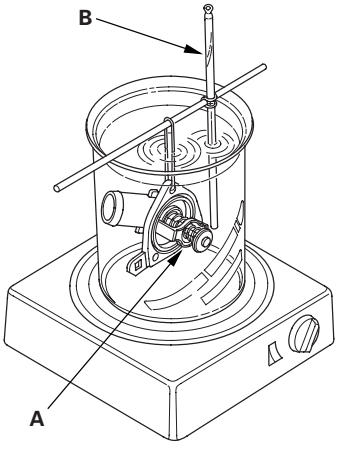

2. Heat the water, and check the temperature with a thermometer. Check the temperature at which the thermostat first opens, and at which it is fully open.

3. Measure the lift height of the thermostat when it is fully open.

Standard Thermostat

Lift Height:	**Above 8.0 mm (0.31 in.)**
Starts Opening:	**169—176 °F (76—80 °C)**
Fully Open:	**194 °F (90 °C)**

Water Pump Inspection

1. Remove the drive belt (see page 4-43).

2. Turn the water pump pulley counterclockwise. Check that it turns freely. If it doesn't turn smoothly, replace the water pump.

   NOTE: When you check the water pump pulley, you may see a small amout of ''weeping'' from the bleed holes (A). This is normal.

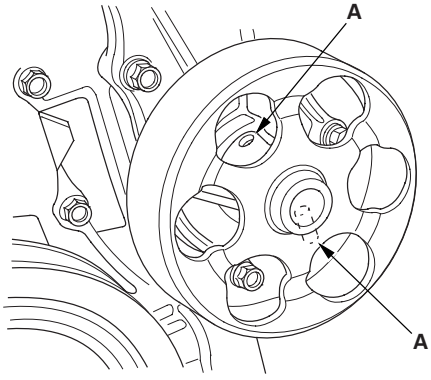

3. Install the drive belt (see page 4-43).

Water Pump Replacement

1. Remove the drive belt (see page 4-43).

2. Drain the engine coolant (see page 10-6).

3. Remove the drive belt auto-tensioner (see page 4-45).

4. K20A3 engine: Remove the six bolts securing the water pump, then remove the water pump (A).

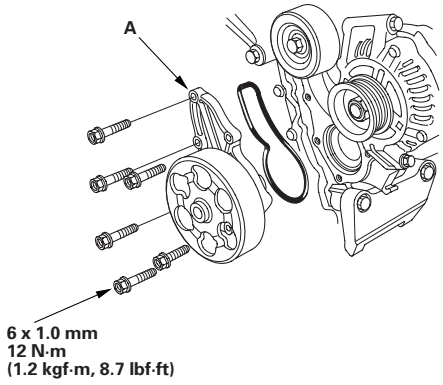

5. K20A2, K20Z1 engines: Remove the oil cooler joint pipe (A), then remove the seven bolts securing the water pump. Remove the water pump (B).

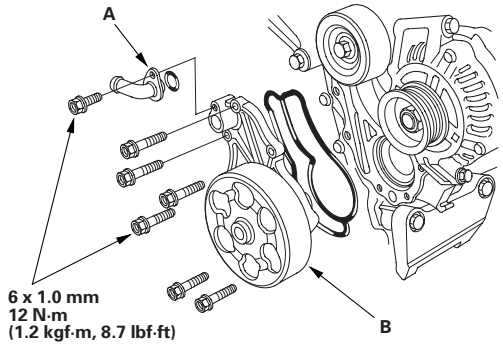

6. Inspect and clean the O-ring groove and mating surface with the water passage.

7. Install the water pump with new O-rings in the reverse order of removal.

8. Install the drive belt auto-tensioner (see page 4-45).

9. Refill the radiator with engine coolant, and bleed air from the cooling system with the heater valve open (see step 7 on page 10-7).

10. Clean up any spilled engine coolant.

Coolant Check

1. Look at the coolant level in the reserve tank. Make sure it is between the MAX mark (A) and MIN mark (B).

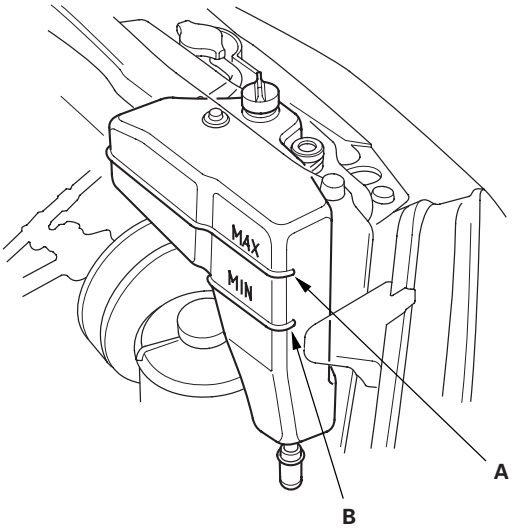

2. If the coolant level in the reserve tank is at or below the MIN mark, add coolant to bring it up to the MAX mark, and inspect the cooling system for leaks.

Coolant Replacement

1. Start the engine. Set the heater temperature control dial to maximum heat, then turn off the ignition switch. Make sure the engine and radiator are cool to the touch.

2. Remove the radiator cap.

3. Loosen the drain plug (A), and drain the engine coolant.

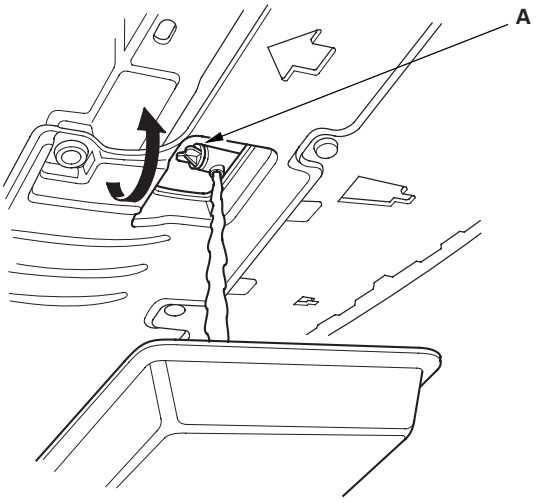

4. Remove the splash shield (see step 24 on page 5-5).

5. Remove the reserve tank drain cap (A), and drain the engine coolant.

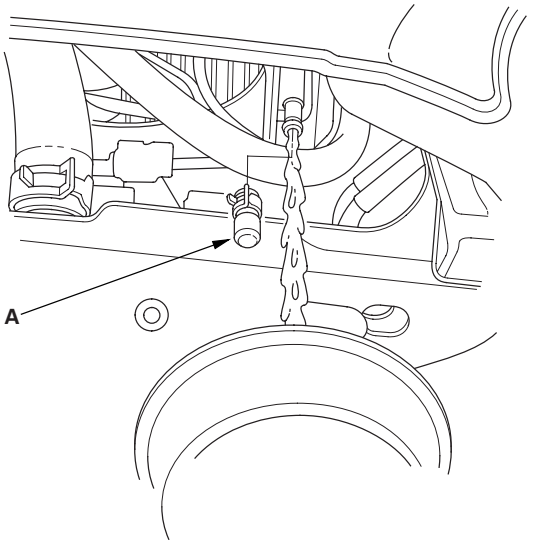

6. After the coolant has drained, tighten the radiator drain plug securely, and install the reserve tank drain cap securely.

7. Fill the reserve tank to the MAX mark (A) with ACURA Long Life Antifreeze/Coolant Type 2 (P/N OL999-9001).

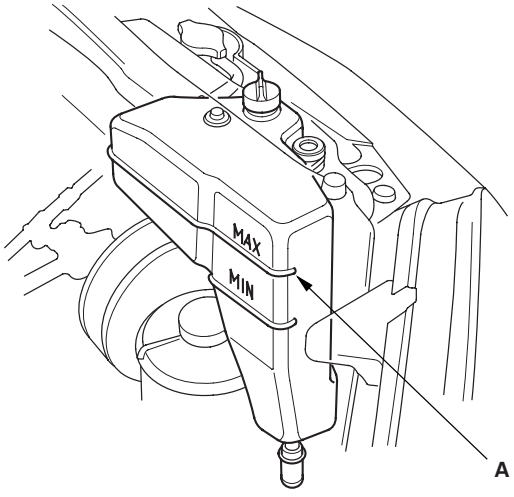

8. Pour ACURA Long Life Antifreeze/Coolant Type 2 into the radiator up to the base of the filler neck.

   NOTE:
   - Always use ACURA Long Life Antifreeze/Coolant Type 2 (P/N OL999-9001). Using a non-Honda coolant can result in corrosion, causing the cooling system to malfunction or fail.
   - ACURA Long Life Antifreeze/Coolant Type 2 is a mixture of 50 % antifreeze and 50 % water. Do not add water.

   Engine Coolant Capacities (including the reserve tank capacity of 0.5 L (0.13 US gal))
   After Coolant Change:
   M/T: 5.1 L (1.35 US gal)
   A/T: 5.0 L (1.32 US gal)
   After Engine Overhaul:
   M/T: 6.4 L (1.69 US gal)
   A/T: 6.3 L (1.66 US gal)

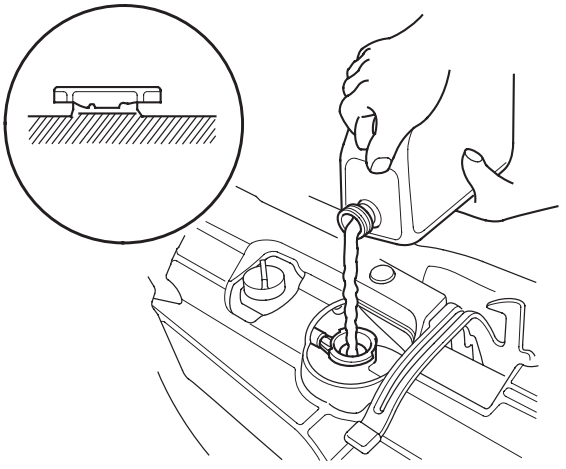

9. Install the radiator cap loosely.

10. Start the engine, and let it run until it warms up (the radiator fan comes on at least twice).

11. Turn off the engine. Check the level in the radiator and add ACURA Long Life Antifreeze/Coolant Type 2 if needed.

12. Put the radiator cap on tightly, then run the engine again and check for leaks.

13. Install the splash shield (see step 25 on page 5-16).

Thermostat Replacement

1. Drain the engine coolant (see page 10-6).
2. Remove the splash shield (see step 24 on page 5-5).
3. Remove the lower hose, then remove the thermostat.

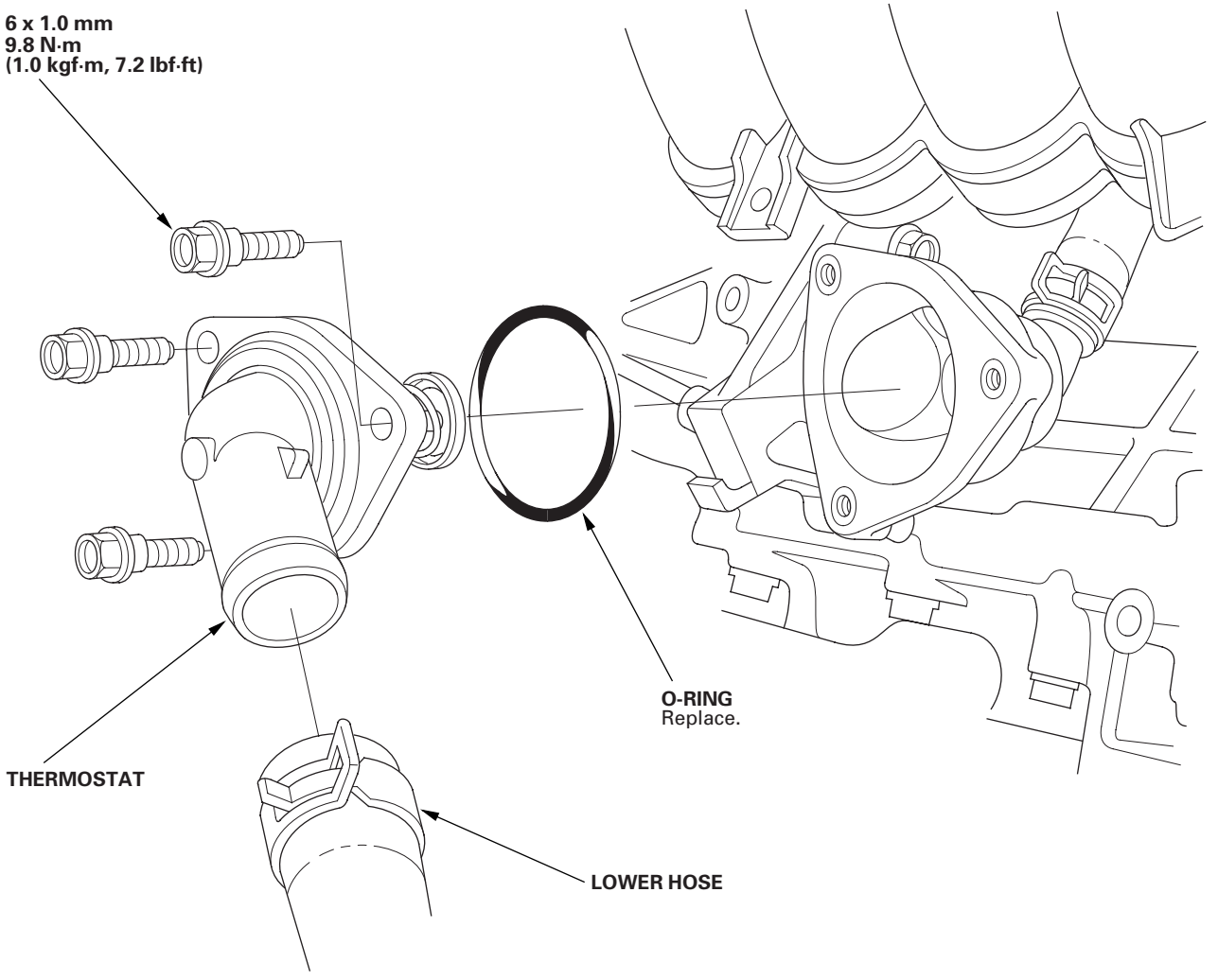

4. Install the thermostat with a new O-ring, then install the lower hose.
5. Install the splash shield (see step 25 on page 5-16).
6. Refill the radiator with engine coolant, and bleed the air from cooling system with the heater valve open (see step 8 on page 10-7).

Water Passage Replacement

1. Drain the engine coolant (see page 10-6).

2. Remove the alternator (see page 4-46).

3. Remove the A/C compressor without disconnecting the A/C hoses (see step 49 on page 5-10).

4. Remove the intake manifold:

   - K20A3 engine (see page 9-3)
   - K20A2, K20Z1 engines (see page 9-9)

5. Remove a bolt (A) securing the connecting pipe.

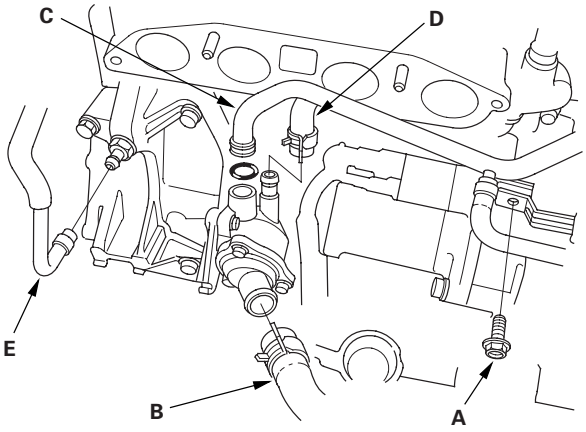

6. Remove the lower hose (B), connecting pipe (C), water bypass hose (D), and positive crankcase ventilation (PCV) hose (E).

7. Remove the water passage (A).

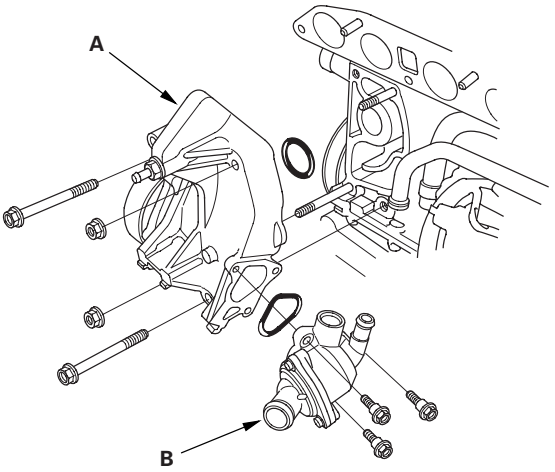

8. Remove the thermostat housing (B).

9. Remove the water pump (see page 10-5).

(cont'd)

Water Passage Replacement (cont'd)

10. Clean and dry the water passage mating surfaces.

11. Apply liquid gasket, P/N 08717-0004, 08718-0001, 08718-0002, 08718-0003, or 08718-0009 evenly to the cylinder block mating surface of the water passage.

    NOTE: Do not install components if too much time has passed after applying the liquid gasket (for P/N 08718-0002, no more than 4 minutes, for all others, no more than 5 minutes). Instead, remove the old residue and reapply the liquid gasket.

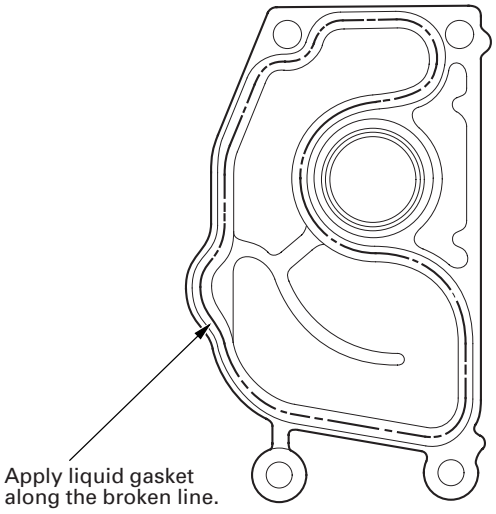

12. Install the water pump (see page 10-5).

13. Install the thermostat housing (A) with a new O-ring (B).

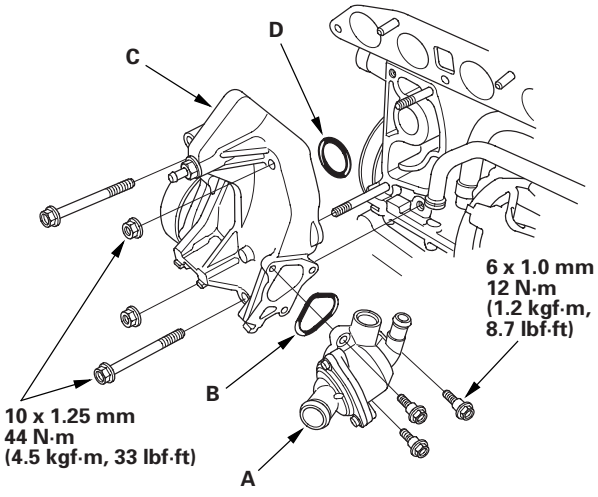

14. Install the water passage (C) with a new O-ring (D).

    NOTE: Wait at least 30 minutes before filling the engine with coolant.

15. Install the lower hose (A), water bypass hose (B), and positive crankcase ventilation (PCV) hose (C).

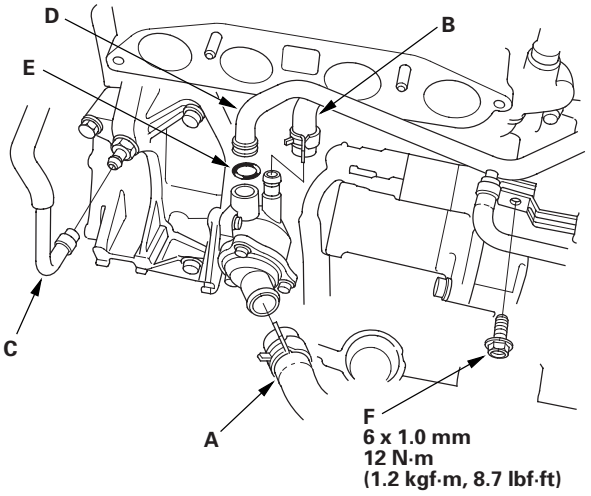

16. Install the connecting pipe (D) with a new O-ring(E).

17. Tighten a bolt (F) securing the connecting pipe.

18. Install the intake manifold:

    - K20A3 engine (see page 9-5)
    - K20A2, K20Z1 engines (see page 9-11)

19. Install the A/C compressor (see step 3 on page 5-12).

20. Install the alternator (see page 4-46).

Water Outlet Replacement

Replace the water outlet (A). Discard the old O-ring (B) and replace it with a new one.

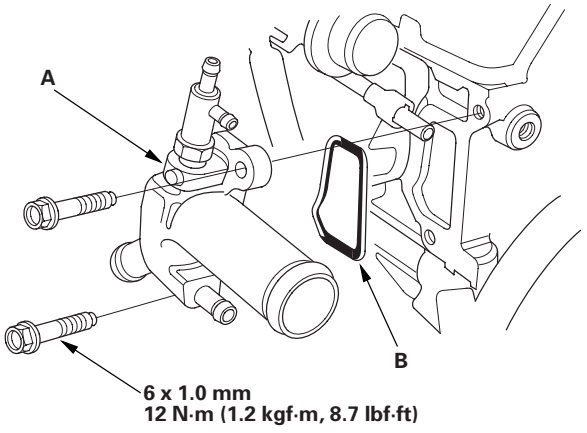

Radiator and Fan Replacement

1. Drain the engine coolant (see page 10-6).

2. Remove the front bumper.

   - 2002-2004 models (see page 20-90)
   - 2005-2006 models (see page 20-91)

3. Disconnect the hood switch connector, then remove the A/C line bracket mounting bolt, intake air duct mounting bolt, and harness clamps (see step 8 on page 9-4).

4. Remove the upper bracket and cushion mounting bolts, then remove the bulkhead (see step 9 on page 9-4).

5. Remove the upper radiator hose and lower radiator hose.

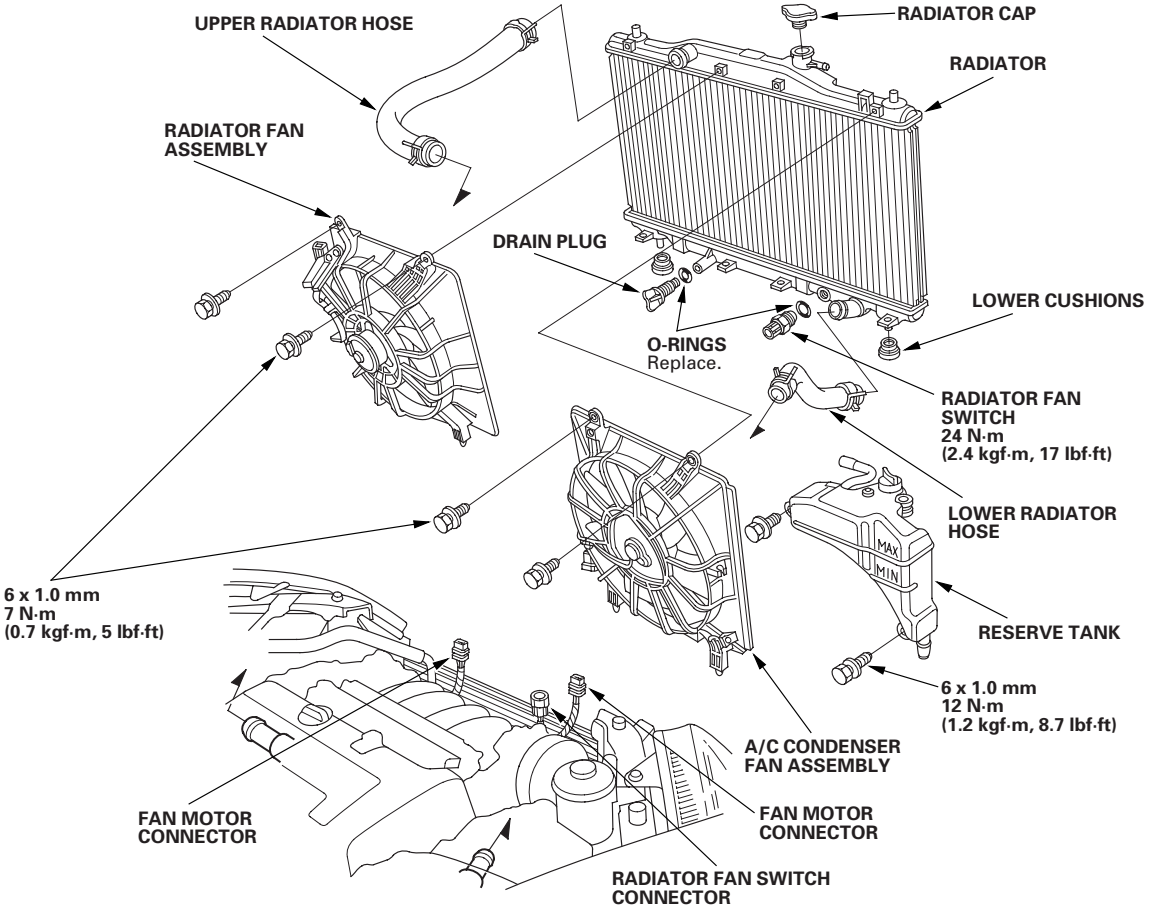

6. Disconnect the fan motor connectors and radiator fan switch connector, then pull up the radiator.

7. Remove the fan shroud assemblies and other parts from the radiator.

8. Install the radiator in the reverse order of removal. Make sure the upper and lower cushions are set securely.

9. Fill the radiator with engine coolant, and bleed the air from the cooling system with the heater valve open (see step 7 on page 10-7).

Component Location Index

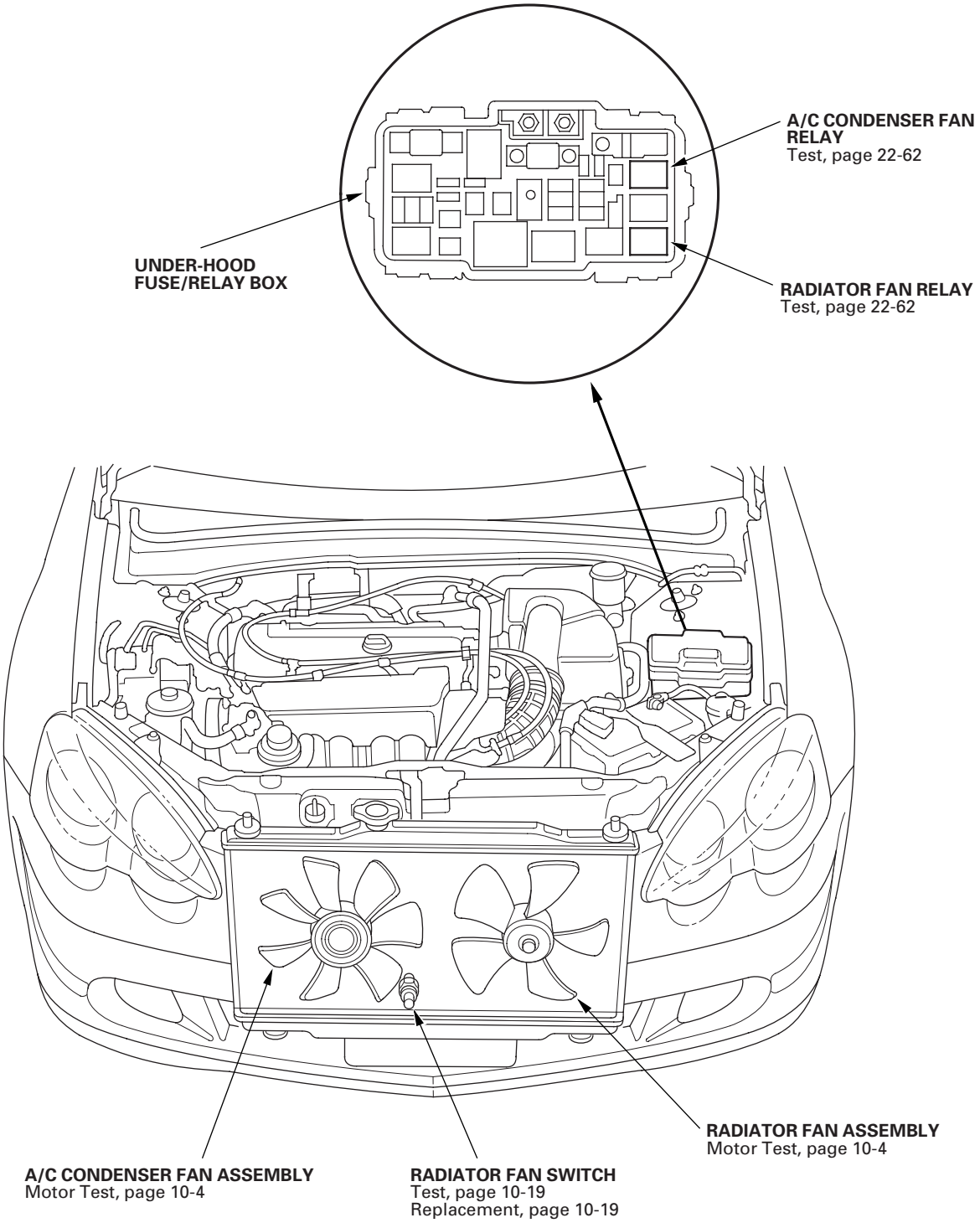

Symptom Troubleshooting Index

Symptom	Diagnostic procedure	Also check for
Engine overheats	1. Inspect the water pump (see page 10-5). 2. Check for a broken drive belt (see page 4-43). 3. Check the drive belt auto-tensioner (see page 4-44). 4. Check the thermostat (see page 10-4). 5. Check for the coolant leakage (from gaskets, hoses, O-rings, etc.). 6. Check for dirt, leaves, or insects on radiator and condenser. 7. Check for damaged or deformed fan shroud. 8. Check for plugged or deteriorated radiator hoses. 9. Check the radiator cap (see page 10-3). 10. Inspect the fan motors or fan relays. 11. Check for plugged heater core or hose(s). 12. Check the coolant level. 13. Check for deteriorated coolant. 14. Check for a damaged cylinder head gasket.	
The radiator fan does not run at all	Radiator fan circuit troubleshooting (see page 10-16).	Cleanliness and tightness of all connectors
The radiator fan does not run for engine cooling, but it runs with the A/C on	Radiator fan switch circuit troubleshooting (Open) (see page 10-18).	Cleanliness and tightness of all connectors
The radiator fan runs with the ignition switch ON (II), the A/C off, and the engine coolant temperature below 199 °F (93 °C)	Radiator fan switch circuit troubleshooting (Short) (see page 10-18).	Cleanliness and tightness of all connectors
The A/C condenser fan does not run at all (but the radiator fan runs with the A/C on)	A/C condenser fan circuit troubleshooting (see page 21-33).	• HVAC DTCs (see page 21-8) • Cleanliness and tightness of all connectors
Both the radiator fan and the A/C condenser fan do not run with the A/C on (but the A/C compressor runs with the A/C on)	Radiator and A/C condenser fan common circuit troubleshooting (see page 21-35).	• HVAC DTCs (see page 21-8) • Cleanliness and tightness of all connectors
The A/C compressor clutch does not engage (but both the radiator fan and the A/C condenser fan run with the A/C on)	A/C compressor circuit troubleshooting (see page 21-36).	• HVAC DTCs (see page 21-8) • Cleanliness and tightness of all connectors

Circuit Diagram

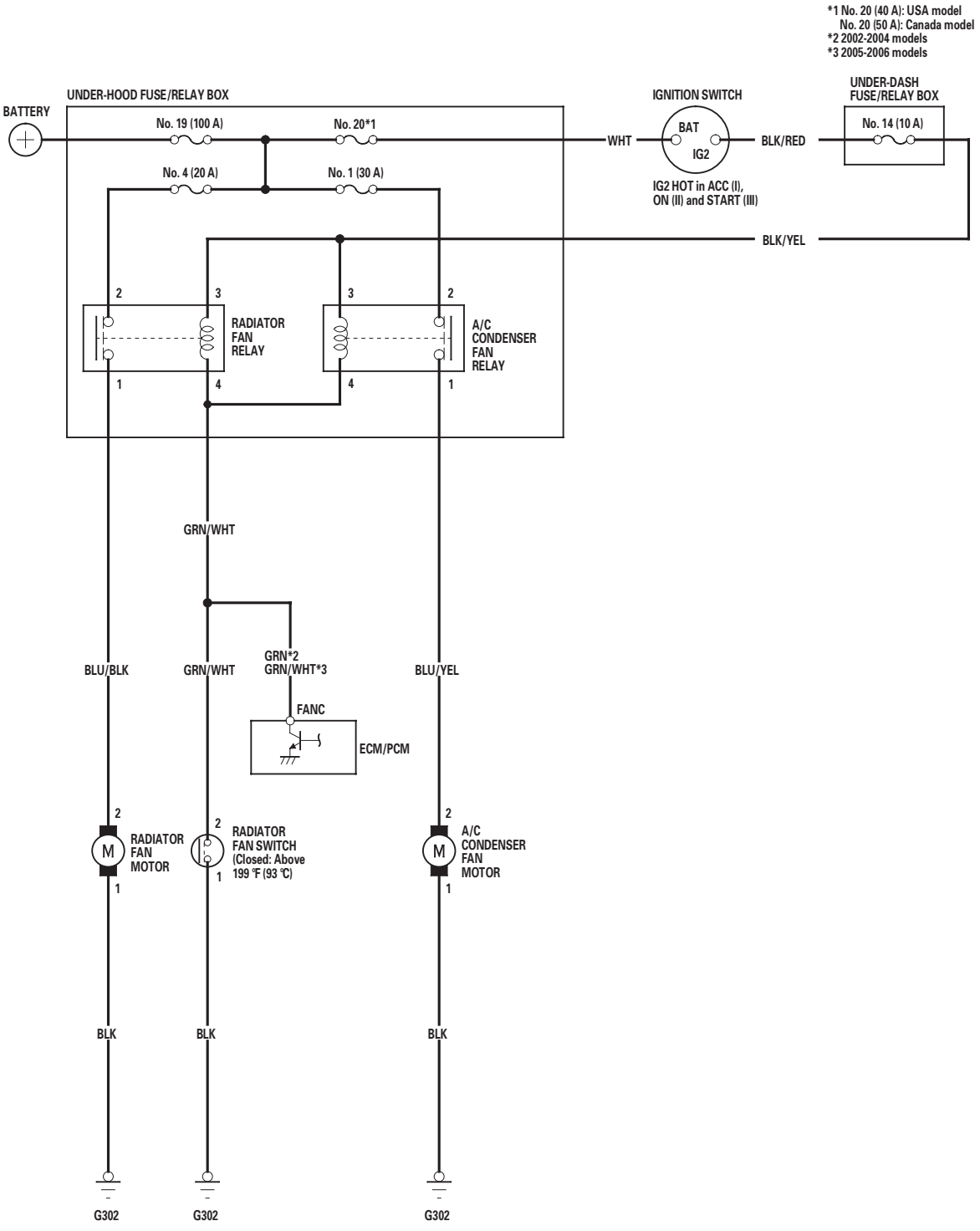

Radiator Fan Circuit Troubleshooting

1. Check the No. 4 (20 A) fuse in the under-hood fuse/relay box, and the No. 14 (10 A) fuse in the under-dash fuse/relay box.

   Are the fuses OK?

   YES—Go to step 2.

   NO—Replace the fuse(s) and recheck. ■

2. Remove the radiator fan relay from the under-hood fuse/relay box, and test it (see page 22-62).

   Is the relay OK?

   YES—Go to step 3.

   NO—Replace the radiator fan relay. ■

3. Measure the voltage between radiator fan relay 4P socket terminal No. 1 and body ground.

   RADIATOR FAN RELAY 4P SOCKET

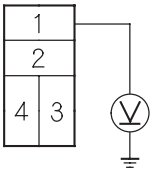

   Terminal side of female terminals

   Is there battery voltage?

   YES—Go to step 4.

   NO—Replace the under-hood fuse/relay box. ■

4. Connect radiator fan relay 4P socket terminals No. 1 and No. 2 with a jumper wire.

   RADIATOR FAN RELAY 4P SOCKET

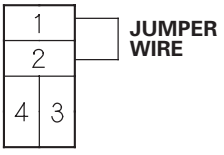

   Terminal side of female terminals

   Does the radiator fan run?

   YES—Go to step 5.

   NO—Go to step 6.

5. Disconnect the jumper wire, and turn the ignition switch ON (II). Check for voltage between radiator fan relay 4P socket terminal No. 3 and body ground.

   RADIATOR FAN RELAY 4P SOCKET

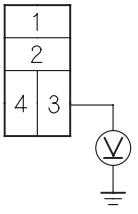

   Terminal side of female terminals

   Is there battery voltage?

   YES—Go to step 9.

   NO—Repair an open in the wire between the under-hood fuse/relay box and under-dash fuse/relay box. ■

6. Disconnect the radiator fan motor 2P connector.

7. Check for continuity between radiator fan relay 4P socket terminal No. 2 and radiator fan motor 2P connector terminal No. 2.

RADIATOR FAN RELAY 4P SOCKET

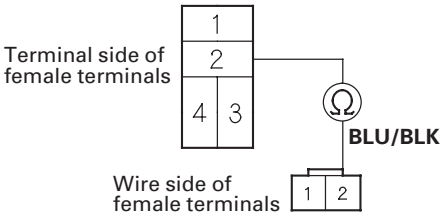

RADIATOR FAN MOTOR 2P CONNECTOR

Is there continuity?

YES—Go to step 8.

NO—Repair an open in the wire between the under-hood fuse/relay box and radiator fan motor 2P connector terminal No. 2. ■

8. Check for continuity between radiator fan motor 2P connector terminal No. 1 and body ground.

RADIATOR FAN MOTOR 2P CONNECTOR

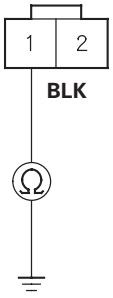

Wire side of female terminals

Is there continuity?

YES—Replace the radiator fan motor. ■

NO—Repair an open in the wire between radiator fan motor 2P connector terminal No. 1 and body ground. If the wire is OK, check for a poor ground at G302. ■

9. Turn the ignition switch OFF.

10. Reinstall the radiator fan relay.

11. Disconnect the radiator fan switch 2P connector.

12. Connect radiator fan switch 2P connector terminals No. 1 and No. 2 with a jumper wire.

RADIATOR FAN SWITCH 2P CONNECTOR

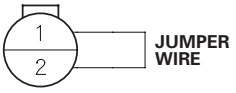

Wire side of female terminals

Does the radiator fan run?

YES—Replace the radiator fan switch. ■

NO—Go to step 13.

13. Turn the ignition switch ON.

14. Remove the jumper wire, and measure the voltage between radiator fan switch connector terminal No. 2 and body ground.

RADIATOR FAN SWITCH 2P CONNECTOR

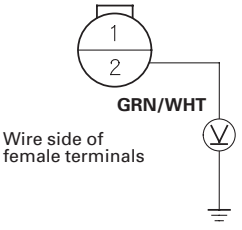

Is there battery voltage?

YES—Repair an open in the wire between radiator fan switch 2P connector terminal No. 1 and body ground. If the wire is OK, check for a poor ground at G302. ■

NO—Repair an open in the wire between radiator fan switch terminal No. 2 and the under-hood fuse/relay box. ■

Radiator Fan Switch Circuit Troubleshooting (Open)

1. Disconnect the radiator fan switch 2P connector.
2. Turn the ignition switch ON (II).
3. Measure voltage between radiator fan switch 2P connector terminal No. 2 and body ground.

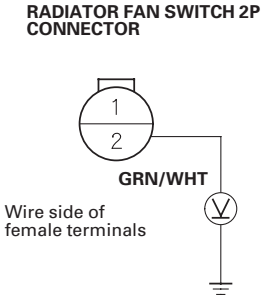

Is there battery voltage?

YES—Go to step 4.

NO—Repair an open in the wire between radiator fan switch 2P connector terminal No. 2 and under-hood fuse/relay box. ■

4. Turn the ignition switch OFF, and check for continuity between radiator fan switch 2P connector terminal No. 1 and body ground.

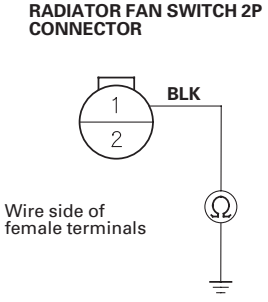

Is there continuity?

YES—Replace the radiator fan switch. ■

NO—Repair an open in the wire between radiator fan switch 2P connector terminal No. 1 and body ground. If the wire is OK, check for a poor ground at G302. ■

Radiator Fan Switch Circuit Troubleshooting (Short)

1. Remove the radiator fan relay from the under-hood fuse/relay box, and test it (see page 22-62).

   Is the relay OK?

   YES—Go to step 2.

   NO—Replace the radiator fan relay. ■

2. Remove the radiator fan switch, and test it (see page 10-19).

   Is the radiator fan switch OK?

   YES—Go to step 3.

   NO—Replace the radiator fan switch. ■

3. Disconnect ECM/PCM connector B (24P) and the under-hood fuse relay box 14P connector.
4. Check for continuity between radiator fan switch 2P connector terminal No. 2 and body ground.

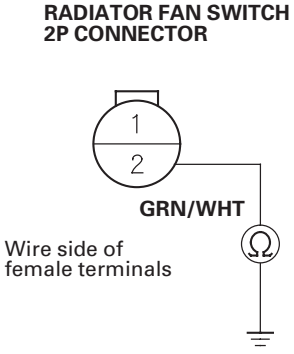

Is there continuity?

YES—Repair a short in the wire between radiator fan switch 2P connector terminal No. 2 and under-hood fuse/relay box. ■

NO—Replace the under-hood fuse/relay box. ■

Radiator Fan Switch Test

1. Remove the radiator fan switch from the radiator (see page 10-19).

2. Suspend the radiator fan switch (A) in a container of water as shown.

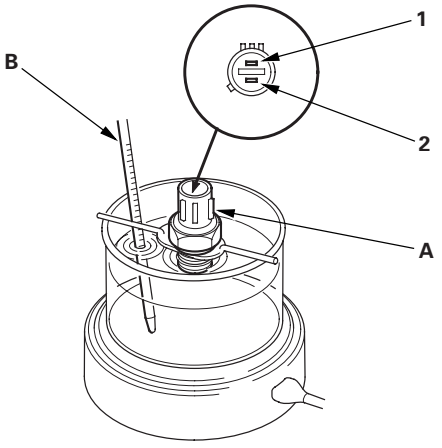

3. Heat the water, and check the temperature with a thermometer. Do not let the thermometer (B) touch the bottom of the hot container.

4. Measure the continuity between terminal No. 1 and terminal No. 2 according to the table.

Operation		Temperature \ Terminal	1	2
SWITCH	ON	196—203 ℉ (91—95 ℃)	○	○
	OFF	5—15 ℉ (3—8 ℃) lower than the temperature when it goes on		

5. Replace, if necessary, and install the radiator fan switch (see page 10-19).

Radiator Fan Switch Replacement

1. Drain the engine coolant (see page 10-6).

2. Disconnect the radiator fan switch connector, then remove the radiator fan switch (A).

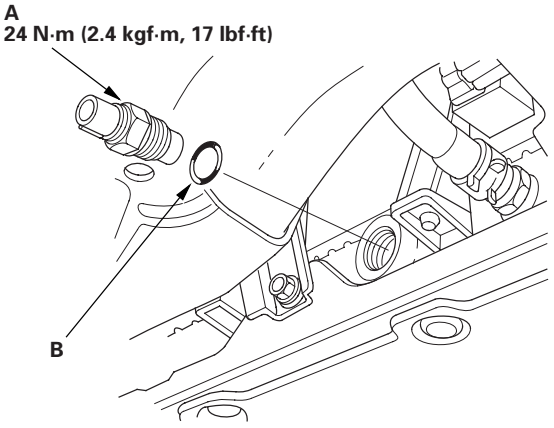

3. Install the radiator fan switch with a new O-ring (B).

4. Fill the reserve tank and radiator with engine coolant, and bleed the air from the cooling system with the heater valve open (see step 7 on page 10-7).

Fuel and Emissions

Fuel and Emissions Systems

Special Tools 11-2
General Troubleshooting Information 11-3
DTC Troubleshooting Index 11-9
Symptom Troubleshooting Index 11-16
System Description 11-20
How to Set Readiness Codes 11-90

PGM-FI System

Component Location Index 11-94
DTC Troubleshooting 11-98
MIL Circuit Troubleshooting 11-248
DLC Circuit Troubleshooting 11-273
Injector Replacement 11-277
A/F Sensor Replacement 11-279
Secondary HO2S Replacement 11-279
CKP Sensor Replacement 11-280
ECT Sensor Replacement 11-280
CMP Sensor B Replacement 11-281
IAT Sensor Replacement 11-281
Knock Sensor Replacement 11-282
Output Shaft (Countershaft) Speed Sensor Replacement 11-283
ECM/PCM Replacement 11-284

VTEC/VTC

Component Location Index 11-285
DTC Troubleshooting 11-286
VTC Oil Control Solenoid Valve Removal/Test/Installation 11-321
CMP Sensor A Replacement 11-323
Rocker Arm Oil Control Solenoid (VTEC Solenoid Valve) Inspection 11-323
Rocker Arm Oil Control Solenoid (VTEC Solenoid Valve) Assembly Removal/Installation 11-324
Rocker Arm Oil Pressure Switch (VTEC Oil Pressure Switch) Removal/Installation 11-324

Idle Control System

Component Location Index 11-325
DTC Troubleshooting 11-326
A/C Signal Circuit Troubleshooting 11-337
Alternator FR Signal Circuit Troubleshooting 11-339
PSP Switch Signal Circuit Troubleshooting 11-342
Brake Pedal Position Switch Signal Circuit Troubleshooting 11-346
Idle Speed Inspection 11-348
ECM/PCM Idle Learn Procedure 11-349

Fuel Supply System

Component Location Index 11-350
Fuel Pump Circuit Troubleshooting 11-353
Fuel Pressure Relieving 11-360
Fuel Pressure Test 11-363
Fuel Tank Draining 11-364
Fuel Line Inspection 11-365
Fuel Line/Quick-Connect Fitting Precautions 11-368
Fuel Line/Quick-Connect Fitting Removal 11-369
Fuel Line/Quick-Connect Fitting Installation 11-370
Fuel Pressure Regulator Replacement 11-373
Fuel Filter Replacement 11-374
Fuel Pump/Fuel Gauge Sending Unit Replacement 11-375
Fuel Tank Replacement 11-377
Fuel Gauge Sending Unit Test 11-379
Low Fuel Indicator Test 11-382

Intake Air System

Component Location Index 11-383
DTC Troubleshooting 11-384
Throttle Body Test 11-403
Throttle Body Cleaning 11-403
Throttle Position Sensor Signal Inspection 11-404
Intake Air Bypass Control Thermal Valve Test 11-405
Intake Air Bypass Control Thermal Valve Replacement 11-406
Air Cleaner Removal/Installation 11-407
Air Cleaner Element Inspection/Replacement 11-407
Throttle Cable Adjustment 11-408
Throttle Cable Removal/Installation 11-409
Throttle Body Removal/Installation 11-410
Throttle Body Disassembly/Reassembly 11-412
IMT (IMRC) Valve Position Sensor Replacement 11-413
IMT (IMRC) Valve Replacement 11-413

Catalytic Converter System

DTC Troubleshooting 11-414

PCV System

DTC Troubleshooting 11-417
PCV Valve Inspection 11-419
PCV Valve Replacement 11-419

EVAP System

Component Location Index 11-420
DTC Troubleshooting 11-422
EVAP Two Way Valve Test 11-468
Fuel Tank Vapor Control Valve Test 11-469
Fuel Tank Vapor Control Valve Replacement 11-471
EVAP Canister Replacement 11-472
FTP Sensor Replacement 11-473
EVAP Canister Vent Shut Valve Replacement 11-474

Special Tools

Ref. No.	Tool Number	Description	Qty
①	07JAZ-001000B	Vacuum/Pressure Gauge, 0—4 in.Hg	1
②	07SAZ-001000A	Backprobe Set	2
③	07VAJ-0040100	Fuel Pressure Gauge Adapter	1
④	07NAJ-P07010A	Pressure Gauge Adapter	1
⑤	07AAA-S0XA100	Fuel Sender Wrench	1
⑥	07ZAJ-S5A0200	Oil Pressure Hose	1
⑦-1	07406-0020201	A/T Pressure Hose	1
⑦-2	07406-0070300	A/T Low Pressure Gauge W/Panel	1
⑦-3	07MAJ-PY4011A	A/T Pressure Hose, 2,210 mm	1
⑦-4	07MAJ-PY40120	A/T Pressure Hose, Adapter	1
⑧	07406-004000B	Fuel Pressure Gauge	1
⑨	07AAJ-S6MA150	Fuel Pressure Gauge Attachment Set	1

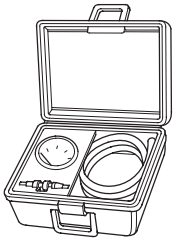

①

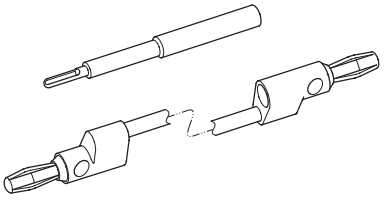

②

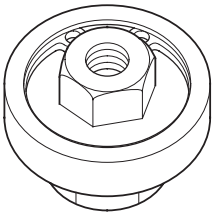

③

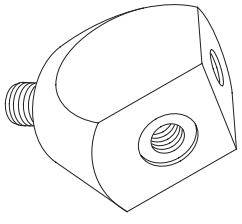

④

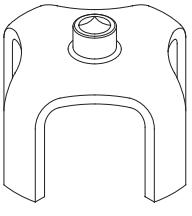

⑤

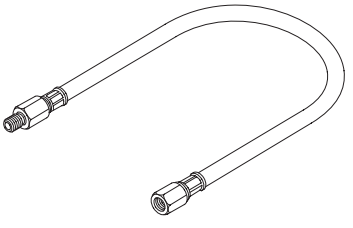

⑥

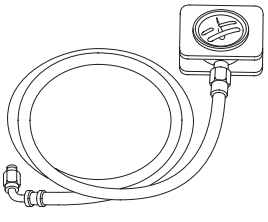

⑦-1, ⑦-2, ⑦-3, ⑦-4

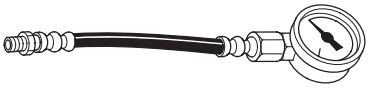

⑧

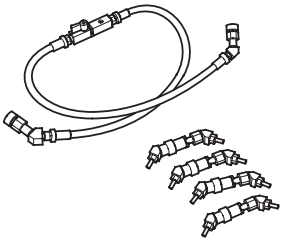

⑨

General Troubleshooting Information

Intermittent Failures

The term ''intermittent failure'' means a system may have had a failure, but it checks OK now. If the malfunction indicator lamp (MIL) on the dash does not come on, check for poor connections or loose pins at all connectors related to the circuit that you are troubleshooting. If the MIL was on but then went out, the original problem may have been intermittent.

Opens and Shorts

''Open'' and ''Short'' are common electrical terms. An open is a break in a wire or at a connection. A short is an accidental connection of a wire to ground or to another wire. In simple electronics, this usually means something won't work at all. With complex electronics (such as ECMs and PCMs) this can sometimes mean something works, but not the way it's supposed to.

How to Use the HDS (Honda Diagnostic System) or an OBD II Scan Tool

If the MIL (Malfunction Indicator Lamp) has come on

1. Start the engine and check the MIL (A).

   NOTE: If the ignition switch is turned ON (II), and the engine is not started, the MIL will stay on for 15—20 seconds (see page 11-90).

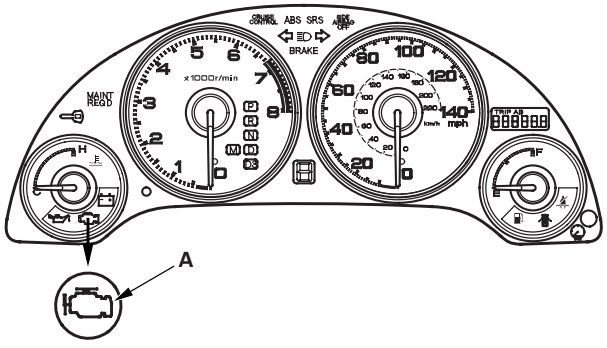

2. If the MIL stays on, connect the HDS or an OBD II scan tool to the data link connector (DLC) (A) located under the driver's side of the dashboard.

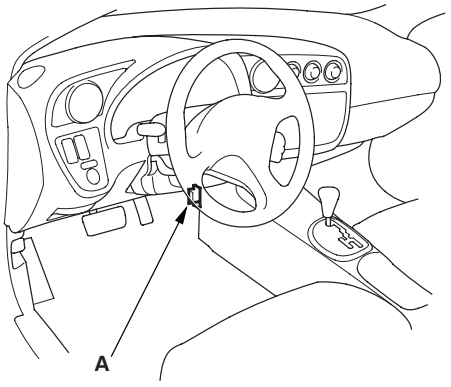

3. Turn the ignition switch ON (II).

4. Check the diagnostic trouble code (DTC) and note it. Also check the freeze data. Refer to the indicated DTC's troubleshooting, and begin the appropriate troubleshooting procedure.

   NOTE:
   - Freeze data indicates the engine conditions when the first malfunction, misfire, or fuel trim malfunction was detected.
   - The HDS or a scan tool can read the DTC, freeze data, current data, and other engine control module (ECM)/powertrain control module (PCM) data.
   - For specific operations, refer to the user's manual that came with the HDS or a scan tool.

5. If no DTCs are found, go to MIL troubleshooting (see page 11-248).

If the MIL did not stay on
If the MIL did not stay on, but there is a driveability problem, do the symptom troubleshooting.

If you can't duplicate the DTC
Some of the troubleshooting requires you to reset the ECM/PCM and try to duplicate the DTC. If the problem is intermittent and you can't duplicate the code, do not continue through the procedure. To do so will only result in confusion and possibly, a needlessly replaced ECM/PCM.

(cont'd)

General Troubleshooting Information (cont'd)

ECM/PCM Reset (2002-2004 Models)

You can reset the ECM/PCM in either of two ways:

NOTE: After resetting the ECM/PCM do the ECM/PCM idle learn procedure (see page 11-349).

Reset the ECM/PCM with the OBD II scan tool or the HDS

1. Turn the ignition switch ON (II). Do not start the engine.

2. Use the OBD II scan tool or the HDS to reset the ECM/PCM.

   NOTE: For the specfic operations, refer to the user's manual that came with the OBD II scan tool or the HDS.

Reset the ECM/PCM by removing the fuse

1. Turn the ignition switch OFF.

2. Remove the No. 6 ECU (ECM/PCM) (15 A) fuse (A) from the under-hood fuse/relay box (B) for 10 seconds.

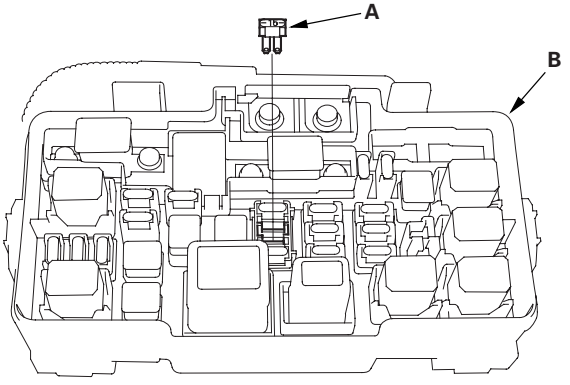

HDS Clear Command (2005-2006 Models)

The ECM/PCM stores various specific data to correct the system even when there is no electrical power such as the battery negative terminal or No. 6 FI ECU (ECM/PCM) (20 A) fuse are disconnected. Stored data based on failed parts should be cleared by using the ''CLEAR COMMAND'' of the HDS, if parts are replaced.

The HDS has three kinds of clear commands to meet this purpose. They are DTC clear, ECM/PCM reset, and CKP pattern clear. DTC clear command erases all stored DTC codes, freeze data and readiness codes. This must be done with the HDS after reproducing the DTC during troubleshooting.
The ECM/PCM reset command erases all stored DTC codes, freeze data, readiness codes, and all specific data to correct the system except CKP pattern. If the CKP pattern data in ECM/PCM was cleared, you must do the CKP pattern learn procedure. The CKP pattern clear command erases only CKP pattern data. This command is for repair of a misfire or the CKP sensor.

Scan Tool Clear Command

If you are using a generic scan tool to clear commands, be aware that there is only one setting for clearing the ECM/PCM, and it clears all commands at the same time (CKP pattern learn, idle learn, readiness codes, freeze data, on-board snapshot, and DTCs). After you clear all commands, you then need to do these procedures, in this order: ECM/PCM idle learn procedure, 2002-2004 models (see page 11-349), 2005-2006 models (see page 11-349); CKP pattern learn procedure (2005-2006 models); Test-drive to set readiness codes to complete (see page 11-90).

DTC Clear (2005-2006 Models)

1. Clear the DTC with the HDS while the engine is stopped.

2. Turn the ignition switch OFF.

3. Turn the ignition switch ON (II). Wait 30 seconds.

4. Turn the ignition switch OFF, and disconnect the HDS from the DLC.

ECM/PCM Reset (2005-2006 Models)

This command clears stored specific data from each vehicle such as DTCs, freeze data, and readiness codes. It does not clear CKP PATTERN data.

1. Reset the ECM/PCM with the HDS while the engine is stopped.
2. Turn the ignition switch OFF.
3. Turn the ignition switch ON (II). Wait 30 seconds.
4. Turn the ignition switch OFF, and disconnect the HDS from the DLC.
5. Do the ECM/PCM idle learn procedure (see page 11-349).

CKP Pattern Clear/CKP Pattern Learn (2005-2006 Models)

NOTE: The ECT needs to be at 176 °F (80 °C) or higher.

1. Clear the CKP PATTERN CLEAR with the HDS while the engine is stopped.
2. Turn the ignition switch OFF.
3. Turn the ignition switch ON (II), and wait 30 seconds.
4. Test-drive the vehicle on a level road: decelerate (with the throttle fully closed) from an engine speed of 2,500 rpm to 1,000 rpm with the A/T 2nd gear in M position, or the M/T in 2nd or 3rd gear.
5. Stop the vehicle. Do not turn the ignition off.
6. Select the ALL DATA LIST in the DATA LIST MENU of the HDS.
7. Check the status of PULSER F/B LEARN. If it is set to NG, the enable criteria was probably not met; repeat the procedure from the beginning.

How to End a Troubleshooting Session (required after any troubleshooting)

1. Reset the ECM/PCM with the HDS.
2. Do the ECM/PCM idle learn procedure.
   - 2002-2004 models (see page 11-349).
   - 2005-2006 models (see page 11-349).
3. Turn the ignition switch OFF.
4. Disconnect the HDS or the OBD II scan tool from the DLC.

   NOTE: The ECM/PCM is part of the immobilizer system. If you replace the ECM/PCM, it will have a different immobilizer code. In order for the engine to start, you must rewrite the immobililzer code with the HDS.

(cont'd)

General Troubleshooting Information (cont'd)

How to Troubleshoot Circuits at the ECM/PCM

Special Tools Required
- Digital multimeter KS-AHM-32-003 (1) or a commercially available digital multimeter
- Backprobe set 07SAZ-001000A (2)

1. Connect the backprobe adapters (A) to the stacking patch cords (B), and connect the cords to a digital multimeter (C).

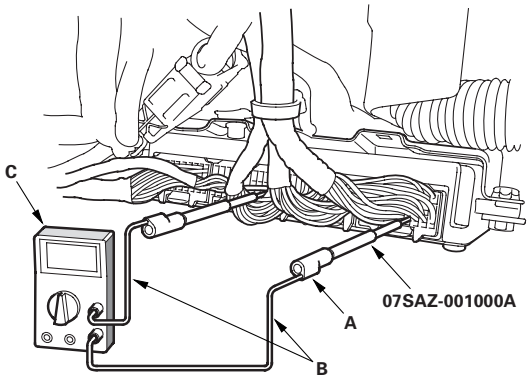

2. Using the wire insulation as a guide for the contoured tip of the backprobe adapter, gently slide the tip into the connector from the wire side until it touches the end of the wire terminal.

3. If you cannot get to the wire side of the connector or the wire side is sealed (A), disconnect the connector and probe the terminals (B) from the terminal side. Do not force the probe into the connector.

NOTICE
Do not puncture the insulation on a wire. Punctures can cause poor or intermittent electrical connections.

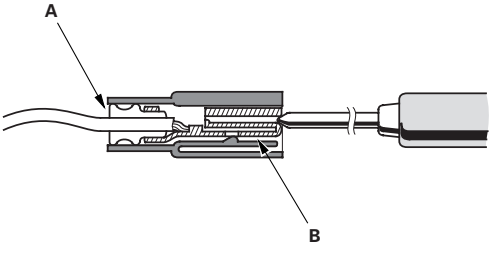

ECM/PCM Updating and Substitution for Testing

Special Tools Required
Honda interface module (HIM) EQS05A35570

Use this procedure when you have to substitute a known-good ECM/PCM in a troubleshooting procedure. Update the ECM/PCM only if the ECM/PCM does not have the latest software loaded.

NOTE: Do not turn the ignition switch OFF while updating the ECM/PCM. If you turn the ignition switch OFF before completion, the ECM/PCM can be damaged.

How to Update the ECM/PCM

NOTE:
- To ensure the latest program is installed, do an ECM/PCM update whenever the ECM/PCM is substituted or replaced.
- You can not update an ECM/PCM with the program it already has. It will only accept a new program.
- Before you update the ECM/PCM, make sure the vehicle's battery is fully charged.
- To prevent ECM/PCM damage, do not operate anything electrical (audio system, brakes, A/C, power windows, moonroof, door locks, etc.) during the update.
- If you need to diagnose the Honda interface module (HIM) because the HIM's red (#3) light came on or was flashing during the update, leave the ignition switch in the ON (II) position when you disconnect the HIM from the data link connector (DLC). This will prevent ECM/PCM damage.

1. Turn the ignition switch ON (II). Do not start the engine.

2. Connect the HDS or the Honda interface module (HIM) to the data link connector (DLC) (A) located under the driver's side of the dashboard.

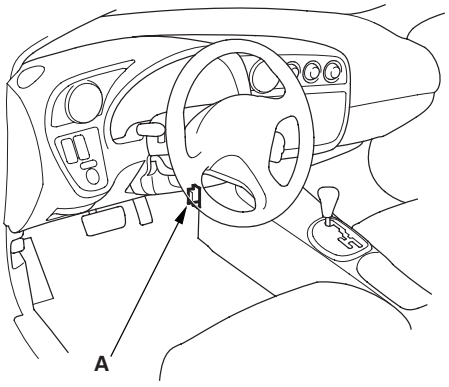

3. Do the ECM/PCM update procedure as described on the HIM label and in the ECM/PCM update system.

4. Do the ECM/PCM idle learn procedure, 2002-2004 models (see page 11-349), 2005-2006 models (see page 11-349).

5. 2005-2006 models: Clear the CKP pattern with the HDS while the engine is stopped.

How to Substitute the ECM/PCM (2002-2004 Models)

1. Remove the ECM/PCM from the vehicle.

2. Install a known-good ECM/PCM.

3. Rewrite the immobilizer code with the ECM/PCM replacement procedure from the HDS; it allows you to start the engine.

4. After completing your tests, install the original ECM/PCM and rewrite the immobilizer code with the ECM/PCM replacement procedure with the HDS.

5. Do the ECM/PCM idle learn procedure (see page 11-349).

How to Substitute the ECM/PCM (2005-2006 Models)

1. Connect the HDS to the data link connector (DLC) (A) located under the driver's side of the dashboard.

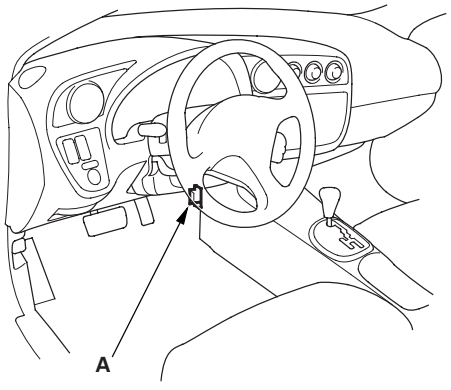

2. Jump the SCS line with the HDS.

(cont'd)

General Troubleshooting Information (cont'd)

3. Remove the passenger's dashboard lower cover (A) (see page 20-67).

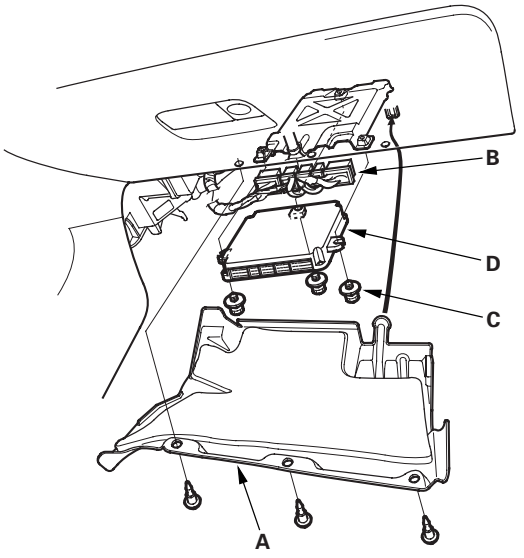

4. Disconnect the ECM/PCM connectors (B).

5. Remove the ECM/PCM mounting bolts (C) and the ECM/PCM (D).

6. Install the ECM/PCM in the reverse order of removal.

7. Open the SCS with the HDS.

8. Turn the ignition switch ON (II).

   NOTE: DTC: P0630 ''VIN Not Programmed or Mismatch'' may be stored because the VIN has not been programmed into the ECM/PCM; ignore it, and continue this procedure.

9. Input the VIN to the ECM/PCM with the HDS.

10. Rewrite the immobilizer code with the ECM/PCM replacement procedure in the HDS; it allows you to start the engine.

11. Reset the ECM/PCM with the HDS.

12. Do the ECM/PCM idle learn procedure (see page 11-349).

13. Do the CKP pattern learn procedure.

OBD Status (2005-2006 Models)

The OBD status shows the current system status of each DTC and all of the parameters. This function is used to see if the technician's repair was successfully finished. The results of diagnostic tests for the DTC are displayed as:

- PASSED: On board diagnosis is successfully finished.
- FAILED: On board diagnosis has finished but failed.
- EXECUTING: The vehicle is in enable criteria conditions for the DTC and the on board diagnosis is running.
- NOT COMPLETED: The on board diagnosis was running but is out of the enable conditions of the DTC.
- OUT OF CONDITION: The vehicle has stayed out of the enable conditions of the DTC.

DTC Troubleshooting Index

2002-2004 Models

DTC (MIL indication*)	Two Drive Cycle Detection	Detection Item	MIL	Note
P0010 (56)	———	Variable Valve Timing Control (VTC) Oil Control Solenoid Valve Malfunction	ON	(see page 11-286)
P0011 (56)	———	Variable Valve Timing Control (VTC) System Malfunction	ON	(see page 11-291)
P0107 (3)	———	Manifold Absolute Pressure (MAP) Sensor Circuit Low Voltage	ON	(see page 11-98)
P0108 (3)	———	Manifold Absolute Pressure (MAP) Sensor Circuit High Voltage	ON	(see page 11-101)
P0112 (10)	———	Intake Air Temperature (IAT) Sensor Circuit Low Voltage	ON	(see page 11-108)
P0113 (10)	———	Intake Air Temperature (IAT) Sensor Circuit High Voltage	ON	(see page 11-110)
P0116 (86)	○	Engine Coolant Temperature (ECT) Sensor Circuit Range/ Performance Problem	ON	(see page 11-114)
P0117 (6)	———	Engine Coolant Temperature (ECT) Sensor Circuit Low Voltage	ON	(see page 11-116)
P0118 (6)	———	Engine Coolant Temperature (ECT) Sensor Circuit High Voltage	ON	(see page 11-118)
P0122 (7)	———	Throttle Position (TP) Sensor Circuit Low Voltage	ON	(see page 11-122)
P0123 (7)	———	Throttle Position (TP) Sensor Circuit High Voltage	ON	(see page 11-127)
P0125 (86)*6	○	Engine Coolant Temperature (ECT) Sensor Malfunction/Slow Response	ON	(see page 11-130)
P0128 (87)	○	Cooling System Malfunction	ON	(see page 11-132)
P0133 (61)*6	○	Air Fuel Ratio (A/F) Sensor (Sensor 1) Slow Response	ON	(see page 11-135)
P0134 (41)*7	———	Air Fuel Ratio (A/F) Sensor (Sensor 1) Heater System Malfunction	ON	(see page 11-137)
P0135 (41)*6	———	Air Fuel Ratio (A/F) Sensor (Sensor 1) Heater Circuit Malfunction	ON	(see page 11-139)
P0137 (63)	○	Secondary Heated Oxygen Sensor (Secondary HO2S (Sensor 2)) Circuit Low Voltage	ON	(see page 11-146)
P0138 (63)	○	Secondary Heated Oxygen Sensor (Secondary HO2S (Sensor 2)) Circuit High Voltage	ON	(see page 11-149)
P0139 (63)	○	Secondary Heated Oxygen Sensor (Secondary HO2S (Sensor 2)) Slow Response	ON	(see page 11-154)
P0141 (65)	———	Secondary Heated Oxygen Sensor (Secondary HO2S (Sensor 2)) Heater Circuit Malfunction	ON	(see page 11-156)
P0171 (45)	○	Fuel System Too Lean	ON	(see page 11-161)
P0172 (45)	○	Fuel System Too Rich	ON	(see page 11-161)
P0300 and some of P0301 (71) P0302 (72) P0303 (73) P0304 (74)	○	Random Misfire Detected	ON	(see page 11-163)
P0301 (71)	○	No. 1 Cylinder Misfire Detected	ON	(see page 11-167)
P0302 (72)	○	No. 2 Cylinder Misfire Detected	ON	(see page 11-167)
P0303 (73)	○	No. 3 Cylinder Misfire Detected	ON	(see page 11-167)
P0304 (74)	○	No. 4 Cylinder Misfire Detected	ON	(see page 11-167)

* : These DTCs are indicated by a blinking MIL when the SCS line is jumped with the HDS.
* 6: 2004 model
* 7: 2003-2004 models

(cont'd)

DTC Troubleshooting Index (cont'd)

DTC (MIL indication *)	Two Drive Cycle Detection	Detection Item	MIL	Note
P0325 (23)	———	Knock Sensor Circuit Malfunction	ON	(see page 11-179)
P0335 (4)	———	Crankshaft Position (CKP) Sensor No Signal	ON	(see page 11-182)
P0336 (4) *5	———	Crankshaft Position (CKP) Sensor Circuit Intermittent Interruption	ON	(see page 11-182)
P0339 (4) *6	———	Crankshaft Position (CKP) Sensor Circuit Intermittent Interruption	ON	(see page 11-182)
P0340 (57)	———	Camshaft Position (CMP) Sensor A No Signal	ON	(see page 11-295)
P0341 (57)	———	Camshaft Position (CMP) Sensor A and Crankshaft Position (CKP) Sensor Incorrect Phase Detected	ON	(see page 11-299)
P0344 (57)	———	Camshaft Position (CMP) Sensor A Circuit Intermittent Interruption	ON	(see page 11-295)
P0365 (8) *6	———	Camshaft Position (CMP) Sensor B No Signal	ON	(see page 11-187)
P0369 (8) *6	———	Camshaft Position (CMP) Sensor B Circuit Intermittent Interruption	ON	(see page 11-187)
P0420 (67)	○	Catalyst System Efficiency Below Threshold	ON	(see page 11-414)
P0451 (91)	○	Fuel Tank Pressure (FTP) Sensor Circuit Range/Performance Problem	ON	(see page 11-428)
P0452 (91)	○	Fuel Tank Pressure (FTP) Sensor Circuit Low Voltage	ON	(see page 11-430)
P0453 (91)	○	Fuel Tank Pressure (FTP) Sensor Circuit High Voltage	ON	(see page 11-435)
P0497 (90) *6	○	Evaporative Emission (EVAP) System Low Purge Flow	ON	(see page 11-443)
P0500 (17) *2	———	Vehicle Speed Sensor (VSS) Circuit Malfunction	ON	(see page 11-192)
P0505 (14) *5	○	Idle Control System Malfunction	ON	(see page 11-326)
P0506 (14) *6	○	Idle Control System RPM Lower Than Expected	ON	(see page 11-327)
P0507 (14) *6	○	Idle Control System RPM Higher Than Expected	ON	(see page 11-330)
P0511 (14) *6	———	Idle Air Control (IAC) Valve Circuit Malfunction	ON	(see page 11-332)
P0563 (34)	———	Engine Control Module (ECM)/Powertrain Control Module (PCM) Power Source Circuit Unexpected Voltage	ON	(see page 11-194)
P0600 (39)	———	Serial Communication Link Malfunction	OFF	Refer to the Multiplex Control System Troubleshooting (see page 22-189)
P0607 (—) *6	———	Engine Control Module (ECM)/Powertrain Control Module (PCM) Internal Circuit Malfunction	ON	(see page 11-201)
P0661 (107) *3	———	Intake Manifold Tuning (IMT) (Intake Manifold Runner Control (IMRC)) Valve Position Sensor Circuit Low Voltage	ON	(see page 11-384)
P0662 (107) *3	———	Intake Manifold Tuning (IMT) (Intake Manifold Runner Control (IMRC)) Valve Position Sensor Circuit High Voltage	ON	(see page 11-389)

*: These DTCs are indicated by a blinking MIL when the SCS line is jumped with the HDS.
* 2: M/T model
* 3: K20A3 engine
* 5: 2002-2003 models
* 6: 2004 model

DTC (MIL indication *)	Two Drive Cycle Detection	Detection Item	MIL	Note
P0700 (70) *1, * *	———	Automatic Transaxle (A/T) Control System Malfunction	ON/ OFF	(see page 11-203)
P1077 (106) *3	———	Intake Manifold Tuning (IMT) (Intake Manifold Runner Control (IMRC)) System Malfunction (Low rpm) Stuck Short	ON	(see page 11-392)
P1078 (106) *3	———	Intake Manifold Tuning (IMT) (Intake Manifold Runner Control (IMRC)) System Malfunction (High rpm) Stuck Long	ON	(see page 11-398)
P1106 (13) *5	○	Barometric Pressure (BARO) Sensor Circuit Range/Performance Problem	ON	(see page 11-207)
P1107 (13) *5	———	Barometric Pressure (BARO) Sensor Circuit Low Voltage	ON	(see page 11-207)
P1108 (13) *5	———	Barometric Pressure (BARO) Sensor Circuit High Voltage	ON	(see page 11-207)
P1121 (7)	○	Throttle Position (TP) Sensor Signal Lower Than Expected	ON	(see page 11-209)
P1122 (7)	○	Throttle Position (TP) Sensor Signal Higher Than Expected	ON	(see page 11-211)
P1128 (5)	○	Manifold Absolute Pressure (MAP) Sensor Circuit Lower Than Expected	ON	(see page 11-213)
P1129 (5)	○	Manifold Absolute Pressure (MAP) Sensor Circuit Higher Than Expected	ON	(see page 11-215)
P1157 (48) *6	———	Air Fuel Ratio (A/F) Sensor (Sensor 1) AFS Circuit High Voltage	ON	(see page 11-217)
P1162 (48) *5	———	Air Fuel Ratio (A/F) Sensor (Sensor 1) Circuit Malfunction	ON	(see page 11-221)
P1163 (61) *5	○	Air Fuel Ratio (A/F) Sensor (Sensor 1) Slow Response	ON	(see page 11-135)
P1164 (61) *5	○	Air Fuel Ratio (A/F) Sensor (Sensor 1) Circuit Range/Performance Problem	ON	(see page 11-223)
P1166 (41) *5	———	Air Fuel Ratio (A/F) Sensor (Sensor 1) Heater Circuit Malfunction	ON	(see page 11-139)
P1167 (41) *4	———	Air Fuel Ratio (A/F) Sensor (Sensor 1) Heater System Malfunction	ON	(see page 11-224)
P1259 (22) *5	———	VTEC System Malfunction	ON	(see page 11-304)
P1297 (20)	———	Electrical Load Detector (ELD) Circuit Low Voltage	OFF	(see page 11-226)
P1298 (20)	———	Electrical Load Detector (ELD) Circuit High Voltage	OFF	(see page 11-229)

*: These DTCs are indicated by a blinking MIL when the SCS line is jumped with the HDS.
* *: The D indicator and the MIL may come on at the same time. If using the HDS, you must select the A/T mode to read these DTCs.
*1: A/T model
*3: K20A3 engine
*4: 2002 model
*5: 2002-2003 models
*6: 2004 model

(cont'd)

DTC Troubleshooting Index (cont'd)

DTC (MIL indication*)	Two Drive Cycle Detection	Detection Item	MIL	Note
P1361 (8)*5	———	Camshaft Position (CMP) Sensor B Circuit Intermittent Interruption	ON	(see page 11-187)
P1362 (8)*5	———	Camshaft Position (CMP) Sensor B No Signal	ON	(see page 11-187)
P1456 (90)	○	Evaporative Emission (EVAP) Control System Leakage (Fuel Tank System)	ON	(see page 11-457)
P1457 (90)	○	Evaporative Emission (EVAP) Control System Leakage (EVAP Canister System)	ON	(see page 11-462)
P1519 (14)*5	———	Idle Air Control (IAC) Valve Circuit Malfunction	ON	(see page 11-332)
P1607 (—)*5	———	Engine Control Module (ECM)/Powertrain Control Module (PCM) Internal Circuit Malfunction	ON	(see page 11-201)
P2227 (13)*6	○	Barometric Pressure (BARO) Sensor Circuit Range/Performance Problem	ON	(see page 11-207)
P2228 (13)*6	———	Barometric Pressure (BARO) Sensor Circuit Low Voltage	ON	(see page 11-207)
P2229 (13)*6	———	Barometric Pressure (BARO) Sensor Circuit High Voltage	ON	(see page 11-207)
P2238 (48)*6	———	Air Fuel Ratio (A/F) Sensor (Sensor 1) AFS+ Circuit Low Voltage	ON	(see page 11-241)
P2252 (48)*6	———	Air Fuel Ratio (A/F) Sensor (Sensor 1) AFS− Circuit Low Voltage	ON	(see page 11-243)
P2279 (109)*6	○	Intake Air System Leak Detected	ON	(see page 11-417)
P2646 (22)*6	———	Rocker Arm Oil Pressure Switch (VTEC Oil Pressure Switch) Circuit Low Voltage	ON	(see page 11-308)
P2647 (22)*6	———	Rocker Arm Oil Pressure Switch (VTEC Oil Pressure Switch) Circuit High Voltage	ON	(see page 11-313)
P2A00 (61)*6	○	Air Fuel Ratio (A/F) Sensor (Sensor 1) Circuit Range/Performance Problem	ON	(see page 11-223)

* : These DTCs are indicated by a blinking MIL when the SCS line is jumped with the HDS.
* 5: 2002-2003 models
* 6: 2004 model

2005-2006 Models

DTC (MIL indication *1)	Two Drive Cycle Detection	Detection Item	MIL	Note
P0010 (56)	———	Variable Valve Timing Control (VTC) Oil Control Solenoid Valve Malfunction	ON	(see page 11-288)
P0011 (56)	○	Variable Valve Timing Control (VTC) System Malfunction	ON	(see page 11-293)
P0107 (3)	———	Manifold Absolute Pressure (MAP) Sensor Circuit Low Voltage	ON	(see page 11-99)
P0108 (3)	———	Manifold Absolute Pressure (MAP) Sensor Circuit High Voltage	ON	(see page 11-103)
P0111 (10)	○	Intake Air Temperature (IAT) Sensor Circuit Range/Performance Problem	ON	(see page 11-106)
P0112 (10)	———	Intake Air Temperature (IAT) Sensor Circuit Low Voltage	ON	(see page 11-109)
P0113 (10)	———	Intake Air Temperature (IAT) Sensor Circuit High Voltage	ON	(see page 11-112)
P0116 (86)	○	Engine Coolant Temperature (ECT) Sensor Circuit Range/ Performance Problem	ON	(see page 11-115)
P0117 (6)	———	Engine Coolant Temperature (ECT) Sensor Circuit Low Voltage	ON	(see page 11-117)
P0118 (6)	———	Engine Coolant Temperature (ECT) Sensor Circuit High Voltage	ON	(see page 11-120)
P0122 (7)	———	Throttle Position (TP) Sensor Circuit Low Voltage	ON	(see page 11-124)
P0123 (7)	———	Throttle Position (TP) Sensor Circuit High Voltage	ON	(see page 11-128)
P0125 (86)	○	Engine Coolant Temperature (ECT) Sensor Malfunction/Slow Response	ON	(see page 11-131)
P0128 (87)	○	Cooling System Malfunction	ON	(see page 11-133)
P0133 (61)	○	Air Fuel Ratio (A/F) Sensor (Sensor 1) Slow Response	ON	(see page 11-136)
P0134 (41)	———	Air Fuel Ratio (A/F) Sensor (Sensor 1) Heater System Malfunction	ON	(see page 11-138)
P0135 (41)	———	Air Fuel Ratio (A/F) Sensor (Sensor 1) Heater Circuit Malfunction	ON	(see page 11-142)
P0137 (63)	———	Secondary Heated Oxygen Sensor (Secondary HO2S (Sensor 2)) Circuit Low Voltage	ON	(see page 11-147)
P0138 (63)	———	Secondary Heated Oxygen Sensor (Secondary HO2S (Sensor 2)) Circuit High Voltage	ON	(see page 11-151)
P0139 (63)	○	Secondary Heated Oxygen Sensor (Secondary HO2S (Sensor 2)) Slow Response	ON	(see page 11-155)
P0141 (65)	———	Secondary Heated Oxygen Sensor (Secondary HO2S (Sensor 2)) Heater Circuit Malfunction	ON	(see page 11-158)
P0171 (45)	○	Fuel System Too Lean	ON	(see page 11-162)
P0172 (45)	○	Fuel System Too Rich	ON	(see page 11-162)
P0300 and some of P0301 P0302 P0303 P0304	○	Random Misfire Detected	ON	(see page 11-164)
P0301 (71)	○	No. 1 Cylinder Misfire Detected	ON	(see page 11-172)
P0302 (72)	○	No. 2 Cylinder Misfire Detected	ON	(see page 11-172)
P0303 (73)	○	No. 3 Cylinder Misfire Detected	ON	(see page 11-172)
P0304 (74)	○	No. 4 Cylinder Misfire Detected	ON	(see page 11-172)
P0325 (23)	———	Knock Sensor Circuit Malfunction	ON	(see page 11-180)
P0335 (4)	———	Crankshaft Position (CKP) Sensor No Signal	ON	(see page 11-184)
P0339 (4)	———	Crankshaft Position (CKP) Sensor Circuit Intermittent Interruption	ON	(see page 11-186)
P0340 (57)	———	Camshaft Position (CMP) Sensor A No Signal	ON	(see page 11-297)
P0341 (57)	———	Camshaft Position (CMP) Sensor A and Crankshaft Position (CKP) Sensor Incorrect Phase Detected	ON	(see page 11-300)
P0344 (57)	———	Camshaft Position (CMP) Sensor A Circuit Intermittent Interruption	ON	(see page 11-302)
P0365 (8)	———	Camshaft Position (CMP) Sensor B No Signal	ON	(see page 11-189)
P0369 (8)	———	Camshaft Position (CMP) Sensor B Circuit Intermittent Interruption	ON	(see page 11-191)
P0420 (67)	○	Catalyst System Efficiency Below Threshold	ON	(see page 11-415)
P0442 (90)	○	Evaporative Emission (EVAP) System Small Leak Detected	ON	(see page 11-422)
P0443 (92)	———	Evaporative Emission (EVAP) Canister Purge Valve Circuit Malfunction	ON	(see page 11-425)

NOTE: These DTCs are indicated when the PGM-FI system is selected in the HDS.
Some automatic transmission DTCs cause the MIL to come on. If the MIL is on and no DTCs are indicated in the PGM-FI system, select the A/T system, and check for automatic transmission DTCs.

* 1: These DTCs are indicated by a blinking MIL when the SCS line is jumped with the HDS.

(cont'd)

DTC Troubleshooting Index (cont'd)

DTC (MIL indication *1)	Two Drive Cycle Detection	Detection Item	MIL	Note
P0451 (91)	○	Fuel Tank Pressure (FTP) Sensor Circuit Range/Performance Problem	ON	(see page 11-429)
P0452 (91)	———	Fuel Tank Pressure (FTP) Sensor Circuit Low Voltage	ON	(see page 11-432)
P0453 (91)	———	Fuel Tank Pressure (FTP) Sensor Circuit High Voltage	ON	(see page 11-437)
P0456 (90)	○	Evaporative Emission (EVAP) System Very Small Leak Detected	ON	(see page 11-422)
P0457 (90)	○	Evaporative Emission (EVAP) System Leak Detected/Fuel Fill Cap Loose or Missing	ON	(see page 11-440)
P0496 (92)	○	Evaporative Emission (EVAP) System High Purge Flow	ON	(see page 11-442)
P0497 (90)	○	Evaporative Emission (EVAP) System Low Purge Flow	ON	(see page 11-447)
P0498 (117)	———	Evaporative Emission (EVAP) Canister Vent Shut Valve Circuit Low Voltage	ON	(see page 11-450)
P0499 (117)	———	Evaporative Emission (EVAP) Canister Vent Shut Valve Circuit High Voltage	ON	(see page 11-452)
P0506 (14)	○	Idle Control System RPM Lower Than Expected	ON	(see page 11-328)
P0507 (14)	○	Idle Control System RPM Higher Than Expected	ON	(see page 11-331)
P0511 (14)	———	Idle Air Control (IAC) Valve Circuit Malfunction	ON	(see page 11-334)
P0562 (34)	———	Charging System Low Voltage	OFF	(see page 11-193)
P0563 (34)	———	Engine Control Module (ECM)/Powertrain Control Module (PCM) Power Source Circuit Unexpected Voltage	OFF	(see page 11-196)
P0600 (39)	———	Serial Communication Link Malfunction	OFF	Refer to the Multiplex Control System Troubleshooting (see page 22-189)
P0602 (196)	———	Engine Control Module (ECM)/Powertrain Control Module (PCM) Programming Error	OFF	(see page 11-199)
P0603 (131)	———	Engine Control Module (ECM)/Powertrain Control Module (PCM) Internal Circuit Malfunction (Keep Alive Memory (KAM) Error)	ON	(see page 11-200)
P0606 (0)	———	Engine Control Module (ECM)/Powertrain Control Module (PCM) Processor Malfunction	ON	(see page 11-200)
P0630 (139)	———	VIN Not Programmed or Mismatch	ON	(see page 11-202)
P0661 (107) *4	———	Intake Manifold Tuning (IMT) (Intake Manifold Runner Control (IMRC)) Valve Position Sensor Circuit Low Voltage	ON	(see page 11-386)
P0662 (107) *4	———	Intake Manifold Tuning (IMT) (Intake Manifold Runner Control (IMRC)) Valve Position Sensor Circuit High Voltage	ON	(see page 11-390)
P0685 (135)	○	Engine Control Module (ECM)/Powertrain Control Module (PCM) Power Control Circuit/Internal Circuit Malfunction	ON	(see page 11-203)
P0700 (70) *, *2	———	Automatic Transaxle (A/T) Control System Malfunction	ON/ OFF	(see page 11-203)
P0720 (122) *3	———	Output Shaft (Countershaft) Speed Sensor Circuit Malfunction	ON	(see page 11-204)
P1009 (56)	———	Variable Valve Timing Control (VTC) Advance Malfunction	ON	(see page 11-303)
P1077 (106) *4	○	Intake Manifold Tuning (IMT) (Intake Manifold Runner Control (IMRC)) System Malfunction (Low rpm) Stuck Short	ON	(see page 11-394)
P1078 (106) *4	○	Intake Manifold Tuning (IMT) (Intake Manifold Runner Control (IMRC)) System Malfunction (High rpm) Stuck Long	ON	(see page 11-400)
P1109 (13)	———	Barometric Pressure (BARO) Sensor Circuit Out of Range High	ON	(see page 11-208)
P1116 (86)	○	Engine Coolant Temperature (ECT) Sensor Circuit Range/ Performance Problem	ON	(see page 11-106)
P1121 (7)	○	Throttle Position (TP) Sensor Signal Lower Than Expected	ON	(see page 11-210)
P1122 (7)	○	Throttle Position (TP) Sensor Signal Higher Than Expected	ON	(see page 11-212)
P1128 (5)	○	Manifold Absolute Pressure (MAP) Sensor Circuit Lower Than Expected	ON	(see page 11-214)
P1129 (5)	○	Manifold Absolute Pressure (MAP) Sensor Circuit Higher Than Expected	ON	(see page 11-215)
P1157 (48)	———	Air Fuel Ratio (A/F) Sensor (Sensor 1) AFC Circuit High Voltage	ON	(see page 11-219)
P1172 (61)	———	Air Fuel Ratio (A/F) Sensor (Sensor 1) Circuit Out of Range High	ON	(see page 11-225)

NOTE: These DTCs are indicated when the PGM-FI system is selected in the HDS.
Some automatic transmission DTCs cause the MIL to come on. If the MIL is on and no DTCs are indicated in the PGM-FI system, select the A/T system, and check for automatic transmission DTCs.

* : The D indicator and MIL may come on at the same time.
* 1: These DTCs are indicated by a blinking MIL when the SCS line is jumped with the HDS.
* 2: A/T model
* 3: M/T model
* 4: K20A3 engine

DTC (MIL indication *1)	Two Drive Cycle Detection	Detection Item	MIL	Note
P1297 (20)	———	Electrical Load Detector (ELD) Circuit Low Voltage	OFF	(see page 11-227)
P1298 (20)	———	Electrical Load Detector (ELD) Circuit High Voltage	OFF	(see page 11-231)
P1454 (91)	○	Fuel Tank Pressure (FTP) Sensor Circuit Range/Performance Problem	ON	(see page 11-454)
P1549 (34)	———	Charging System High Voltage	OFF	(see page 11-233)
P16BB (116)	———	Alternator B Terminal Circuit Low Voltage	OFF	(see page 11-234)
P16BC (116)	———	Alternator FR Terminal Circuit/IGP Circuit Low Voltage	OFF	(see page 11-235)
P2195 (48)	———	Air Fuel Ratio (A/F) Sensor (Sensor 1) Signal Stuck Lean	ON	(see page 11-238)
P2227 (13)	○	Barometric Pressure (BARO) Sensor Circuit Range/Performance Problem	ON	(see page 11-239)
P2228 (13)	———	Barometric Pressure (BARO) Sensor Circuit Low Voltage	ON	(see page 11-240)
P2229 (13)	———	Barometric Pressure (BARO) Sensor Circuit High Voltage	ON	(see page 11-240)
P2238 (48)	———	Air Fuel Ratio (A/F) Sensor (Sensor 1) AFS＋ Circuit Low Voltage	ON	(see page 11-242)
P2252 (48)	———	Air Fuel Ratio (A/F) Sensor (Sensor 1) AFS－ Circuit Low Voltage	ON	(see page 11-244)
P2270 (63)	○	Secondary Heated Oxygen Sensor (Secondary HO2S (Sensor 2)) Circuit Signal Stuck Lean	ON	(see page 11-245)
P2271 (63)	○	Secondary Heated Oxygen Sensor (Secondary HO2S (Sensor 2)) Circuit Signal Stuck Rich	ON	(see page 11-245)
P2279 (109)	○	Intake Air System Leak Detected	ON	(see page 11-418)
P2422 (117)	○	Evaporative Emission (EVAP) Canister Vent Shut Valve Stuck Closed Malfunction	ON	(see page 11-454)
P2610 (132)	———	Engine Control Module (ECM)/Powertrain Control Module (PCM) Ignition Off Internal Timer Malfunction	ON	(see page 11-246)
P2646 (22)	———	Rocker Arm Oil Pressure Switch (VTEC Oil Pressure Switch) Circuit Low Voltage	ON	(see page 11-311)
P2647 (22)	———	Rocker Arm Oil Pressure Switch (VTEC Oil Pressure Switch) Circuit High Voltage	ON	(see page 11-315)
P2648 (21)	———	Rocker Arm Oil Control Solenoid (VTEC Solenoid Valve) Circuit Low Voltage	ON	(see page 11-317)
P2649 (21)	———	Rocker Arm Oil Control Solenoid (VTEC Solenoid Valve) Circuit High Voltage	ON	(see page 11-319)
P2A00 (61)	○	Air Fuel Ratio (A/F) Sensor (Sensor 1) Circuit Range/Performance Problem	ON	(see page 11-247)

NOTE: These DTCs are indicated when the PGM-FI system is selected in the HDS.
Some automatic transmission DTCs cause the MIL to come on. If the MIL is on and no DTCs are indicated in the PGM-FI system, select the A/T system, and check for automatic transmission DTCs.

＊1: These DTCs are indicated by a blinking MIL when the SCS line is jumped with the HDS.

Symptom Troubleshooting Index

2002-2004 Models

When the vehicle has one of these symptoms, check the diagnostic trouble code (DTC) with a scan tool. If there is no DTC, do the diagnostic procedure for the symptom, in the sequence listed, until you find the cause.

Symptom	Diagnostic procedure	Also check for
Engine will not start (MIL works OK, no DTCs set)	1. Test the battery (see page 22-61). 2. Test the starter (see page 4-9). 3. Troubleshoot the fuel pump circuit (see page 11-353).	• Low compression • No ignition spark • Intake air leaks • Locked up engine • Broken cam chain • Contaminated fuel
Engine will not start (MIL comes on and stays on, or never comes on at all, no DTCs set)	Troubleshoot the MIL circuit (see page 11-248).	
Engine will not start (immobilizer indicator stays on or flashes)	Troubleshoot the immobilizer system (see page 22-178).	
Engine is hard to start (MIL works OK, no DTCs set)	1. Test the battery (see page 22-61). 2. Check the fuel pressure (see page 11-363).	• Low compression • Intake air leaks • Contaminated fuel
Cold fast idle too low (MIL works OK, no DTCs set)	Check the idle speed (see page 11-348).	
Cold fast idle too high (MIL works OK, no DTCs set)	1. Check the idle speed (see page 11-348). 2. Inspect/adjust the throttle cable (see page 11-408). 3. Inspect and test the throttle body (see page 11-403).	
Idle speed fluctuates (MIL works OK, no DTCs set)	1. Check the idle speed (see page 11-348). 2. Inspect/adjust the throttle cable (see page 11-408). 3. Inspect and test the throttle body (see page 11-403).	Intake air leaks
After warming up, idle speed is below specification without load (MIL works OK, no DTCs set)	1. Troubleshoot the A/C signal circuit (see page 11-337). 2. Troubleshoot the alternator FR signal circuit (see page 11-339). 3. Inspect and test the throttle body (see page 11-403).	Vacuum hose clogged/cracked/ poor connection
After warming up, idle speed is above specification without load (MIL works OK, no DTCs set)	1. Troubleshoot the A/C signal circuit (see page 11-337). 2. Troubleshoot the alternator FR signal circuit (see page 11-339). 3. Inspect and test the throttle body (see page 11-403).	Intake air leaks
Low power (MIL works OK, no DTCs set)	1. Check the fuel pressure (see page 11-363). 2. Inspect and test the throttle body (see page 11-403). 3. Inspect/adjust the throttle cable (see page 11-408).	• Low compression • Camshaft timing • Engine oil level
Engine stalls (MIL works OK, no DTCs set)	1. Check the fuel pressure (see page 11-363). 2. Check the idle speed (see page 11-348). 3. Troubleshoot the brake pedal position switch signal circuit (see page 11-346).	• Intake air leaks • Faulty harness and sensor connections

Symptom	Diagnostic procedure	Also check for
Difficult to refuel (MIL works OK, no DTCs set)	1. Test the fuel tank vapor control valve (see page 11-469). 2. Inspect the fuel tank vapor control signal tube between the fuel pipe and the fuel tank vapor control valve. 3. Inspect the fuel tank vapor vent tube between the EVAP canister and the fuel tank vapor control valve. 4. Check the EVAP canister.	Malfunctioning gas station filling nozzle.
Fuel overflows during refueling (No DTCs set)	Replace the fuel tank vapor control valve (see page 11-471).	Malfunctioning gas station filling nozzle.

Symptom Troubleshooting Index (cont'd)

2005-2006 Models

When the vehicle has one of these symptoms, check for a diagnostic trouble code (DTC) with the HDS. If there is no DTC, do the diagnostic procedure for the symptom, in the sequence listed, until you find the cause.

Symptom	Diagnostic procedure	Also check for
Engine will not start (MIL works OK, no DTCs set)	1. Test the battery (see page 22-61). 2. Test the starter (see page 4-10). 3. Check the fuel pressure (see page 11-363). 4. Troubleshoot the fuel pump circuit (see page 11-356).	• Low compression • No ignition spark • Intake air leaks • Locked up engine • Broken cam chain • Contaminated fuel
Engine will not start (MIL comes on and stays on, or never comes on at all, no DTCs set)	Troubleshoot the MIL circuit (see page 11-260).	
Engine will not start (immobilizer indicator stays on or flashes)	Troubleshoot the immobilizer system (see page 22-178).	
Engine is hard to start (MIL works OK, no DTCs set)	1. Test the battery (see page 22-61). 2. Check the fuel pressure (see page 11-363). 3. Test the throttle body (see page 11-403).	• Low compression • Intake air leaks • Contaminated fuel • Weak spark
Cold fast idle too low (MIL works OK, no DTCs set)	1. Do the ECM/PCM idle learn procedure (see page 11-349). 2. Check the idle speed (see page 11-348).	
Cold fast idle too high (MIL works OK, no DTCs set)	1. Do the ECM/PCM idle learn procedure (see page 11-349). 2. Check the idle speed (see page 11-348). 3. Inspect/adjust the throttle cable (see page 11-408). 4. Test the throttle body (see page 11-403).	
Idle speed fluctuates (MIL works OK, no DTCs set)	1. Do the ECM/PCM idle learn procedure (see page 11-349). 2. Check the idle speed (see page 11-348). 3. Inspect/adjust the throttle cable (see page 11-408). 4. Test the throttle body (see page 11-403).	Intake vacuum leaks
After warming up, idle speed is below specification without load (MIL works OK, no DTCs set)	1. Troubleshoot the A/C signal circuit (see page 11-338). 2. Troubleshoot the alternator FR signal circuit (see page 11-341). 3. Test the throttle body (see page 11-403).	Vacuum hose clogged/cracked/ poor connection
After warming up, idle speed is above specification without load (MIL works OK, no DTCs set)	1. Inspect/adjust the throttle cable (see page 11-408). 2. Troubleshoot the A/C signal circuit (see page 11-338). 3. Troubleshoot the alternator FR signal circuit (see page 11-341). 4. Test the throttle body (see page 11-403). 5. Inspect the TP sensor (see page 11-404).	Intake air leaks

Symptom	Diagnostic procedure	Also check for
Low power (MIL works OK, no DTCs set)	1. Check the fuel pressure (see page 11-363). 2. Inspect/adjust the throttle cable (see page 11-408). 3. Test the throttle body (see page 11-403).	• Low compression • Incorrect camshaft timing • Incorrect engine oil level
Engine stalls (MIL works OK, no DTCs set)	1. Do the ECM/PCM idle learn procedure (see page 11-349). 2. Check the fuel pressure (see page 11-363). 3. Check the idle speed (see page 11-348). 4. Troubleshoot the brake pedal position switch signal circuit (see page 11-347).	• Intake air leaks • Faulty harness and sensor connections
Difficult to refuel (MIL works OK, no DTCs set)	1. Check the fuel vent tube between the EVAP canister and the fuel tank. 2. Check the fuel tank vapor recirculation tube between the fuel pipe and the fuel tank. 3. Replace the fuel tank (see page 11-378).	Malfunctioning gas station filling nozzle.
Fuel overflows during refueling (No DTCs set)	Replace the fuel tank (see page 11-378).	Malfunctioning gas station filling nozzle.

System Description

ECM/PCM Data (2002-2004 Models)

You can retrieve data from the ECM/PCM by connecting a scan tool or the HDS to the data link connector (DLC). The items listed in the table conform to SAE recommended practice. The HDS also reads data beyond that recommended by SAE to help you find the causes of intermittent problems.

NOTE:
- The ''operating values'' listed are approximate and may vary depending on the environment and the individual vehicle.
- Unless noted otherwise, ''at idle speed'' means idling with the engine completely warmed up, A/T in Park or neutral, M/T in neutral position, and the A/C and all accessories turned off.

Data	Description	Operating Value	Freeze Data
Diagnostic Trouble Code (DTC)	If the ECM/PCM detects a problem, it will store it as a code consisting of one letter and four numbers. Depending on the problem, an SAE-defined code (P0xxx, P2xxx) or a Honda-defined code (P1xxx) will be output to a scan tool or the HDS.	If no problem is detected, there is no output.	YES
Engine Speed	The ECM/PCM computes engine speed from the signals sent from the Crankshaft Position (CKP) sensor. This data is used for determining the timing and amount of injected fuel.	Nearly the same as tachometer indication At idle speed: 650±50 rpm (700±50 rpm) *1	YES
Vehicle Speed	The ECM/PCM converts pulse signals from Vehicle Speed Sensor (VSS).	Nearly the same as speedometer indication	YES
Manifold Absolute Pressure (MAP)	The absolute pressure caused in the intake manifold by engine load and speed.	With engine stopped: Nearly the same as atmospheric pressure. At idle speed: about 20—41 kPa (6—12 in.Hg, 150—310 mmHg), about 0.7—1.3 V	YES
Engine Coolant Temperature (ECT)	The ECT sensor converts coolant temperature into voltage and signals the ECM/PCM. The sensor is a thermistor whose internal resistance changes with coolant temperature. The ECM/PCM uses the voltage signals from the ECT sensor to determine the amount of injected fuel.	With cold engine: Same as ambient temperature and IAT. With engine warmed up: about 176—212 ℉ (80—100 ℃), about 0.5—0.8 V	YES
Air Fuel Ratio (A/F) Sensor, (Sensor 1)	The A/F sensor detects the oxygen content in the exhaust gas and sends voltage signals to the ECM/PCM. Based on these signals, the ECM/PCM controls the air/fuel ratio. When the oxygen content is high (that is, when the ratio is leaner than the stoichiometric ratio), the voltage signal is lower. When the oxygen content is low (that is, when the ratio is richer than the stoichiometric ratio), the voltage signal is higher. The A/F sensor signals are electrical current that are indicated as voltage on a scan tool or the HDS.	0.0—1.25 V At idle speed: about 0.1—0.9 V	NO

* 1: K20A2 engine

Data	Description	Operating Value	Freeze Data
Heated Oxygen Sensor (HO2S) (Secondary, Sensor 2)	The HO2S detects the oxygen content in the exhaust gas and sends voltage signals to the ECM/PCM. Based on these signals, the ECM/PCM controls the air/fuel ratio. When the oxygen content is high (that is, when the ratio is leaner than the stoichiometric ratio), the voltage signal is lower. When the oxygen content is low (that is, when the ratio is richer than the stoichiometric ratio), the voltage signal is higher.	about 0.0—1.25 V At idle speed: about 0.1—0.9 V	NO
Fuel System Status	Fuel system status is indicated as ''open'' or ''closed''. Closed: Based on the A/F Sensor output, the ECM/PCM determines the air/fuel ratio and controls the amount of injected fuel. Open: Ignoring A/F Sensor output, the ECM/PCM refers to signals from the Throttle Position (TP), Manifold Absolute Pressure (MAP), Intake Air Temperature (IAT), Barometric Pressure (BARO) and Engine Coolant Temperature (ECT) sensors to control the amount of injected fuel.	At idle speed: closed	YES
Short Term Fuel Trim	The air/fuel ratio correction coefficient for correcting the amount of injected fuel when the Fuel System Status is ''closed''. When the ratio is leaner than the stoichiometric ratio, the ECM/PCM increases short term fuel trim gradually, and the amount of injected fuel increases. The air/fuel ratio gradually gets richer, causing a lower oxygen content in the exhaust gas. Consequently, the short term fuel trim is lowered, and the ECM/PCM reduces the amount of injected fuel. This cycle keeps the air/fuel ratio close to the stoichiometric ratio when in closed loop status.	0.7—1.5	YES
Long Term Fuel Trim	Long term fuel trim is computed from short term fuel trim and indicates changes occurring in the fuel supply system over a long period. If long term fuel trim is higher than 1.00, the amount of injected fuel must be increased. If it is lower than 1.00, the amount of injected fuel must be reduced.	0.8—1.2	YES
Intake Air Temperature (IAT)	The IAT sensor converts intake air temperature into voltage and signals the ECM/PCM. When intake air temperature is low, the internal resistance of the sensor increases, and the voltage signal is higher.	With cold engine: Same as ambient temperature and ECT	YES
Throttle Position	Based on the accelerator pedal position, the opening angle of the throttle valve is indicated.	At idle speed: about 10 %	YES
Ignition Timing	Ignition timing is the ignition advance angle set by the ECM/PCM. The ECM/PCM matches ignition timing to the driving conditions.	At idle speed: 8 °±5 ° BTDC when the SCS line is jumped with the HDS	NO
Calculated Load Value (CLV)	CLV is the engine load calculated from the MAP data.	At idle speed: 12—34 % At 2,500 rpm without load: 14—34 %	YES

(cont'd)

System Description (cont'd)

Electronic Control System

The functions of the fuel and emission control systems are managed by the engine control module (ECM) on vehicles with manual transmissions, or the powertrain control module (PCM) on vehicles with automatic transmissions.

Self-diagnosis
The ECM/PCM detects a failure of a signal from a sensor or from another control unit and stores a Temporary DTC or a DTC. Depending on the failure, a DTC is stored whether in the first or the second drive cycle. When a DTC is stored, the ECM/PCM turns on the malfunction indicator lamp (MIL) by supplying ground to the MIL circuit.

- **One Drive Cycle Detection Method**
  When an abnormality occurs in the signal from a sensor or from another control unit, the ECM/PCM stores a DTC and turns on the MIL.

- **Two Drive Cycle Detection Method**
  When an abnormality occurs in the signal from a sensor or from another control unit in first drive cycle, the ECM/PCM stores a Temporary DTC. The MIL does not come on at this time. If the failure continues in the second drive cycle, the ECM/PCM stores a DTC and turns on the MIL.

Fail-safe Function
When an abnormality occurs in the signal from a sensor or from another control unit, the ECM/PCM ignores that signal, stores a DTC and turns on the MIL. The ECM/PCM will use a pre-programmed value, for that sensor, which allows the engine to continue running.

MIL Bulb Check and Readiness Code Condition
When the ignition switch is turned ON (II), the ECM/PCM supplies ground to the MIL circuit for about 15 to 20 seconds to check the bulb condition. If any readiness codes are not set to complete, the MIL flashes five times. If all readiness codes are set to complete, the MIL goes out.

Self Shut Down (SSD) Mode
After the ignition switch is turned OFF, the ECM/PCM stays on (up to 15 minutes). If the ECM/PCM connector is disconnected during this time, the ECM/PCM may be damaged. To cancel this mode, disconnect the negative cable from the battery or jump the SCS line with the HDS after the ignition switch is turned OFF.

ECM/PCM Electrical Connections—2002-2004 Models

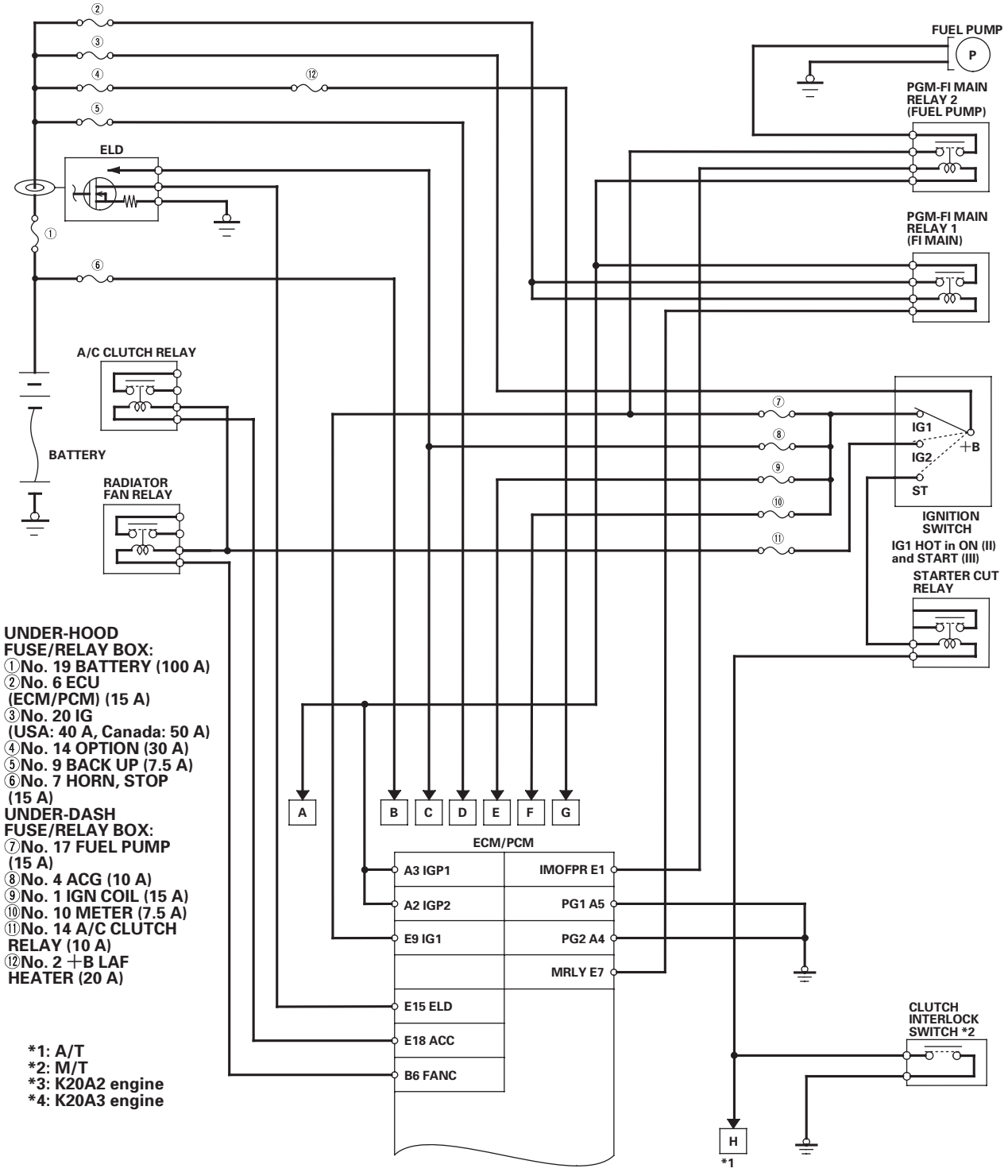

(cont'd)

System Description (cont'd)

ECM/PCM Electrical Connections—2002-2004 Models (cont'd)

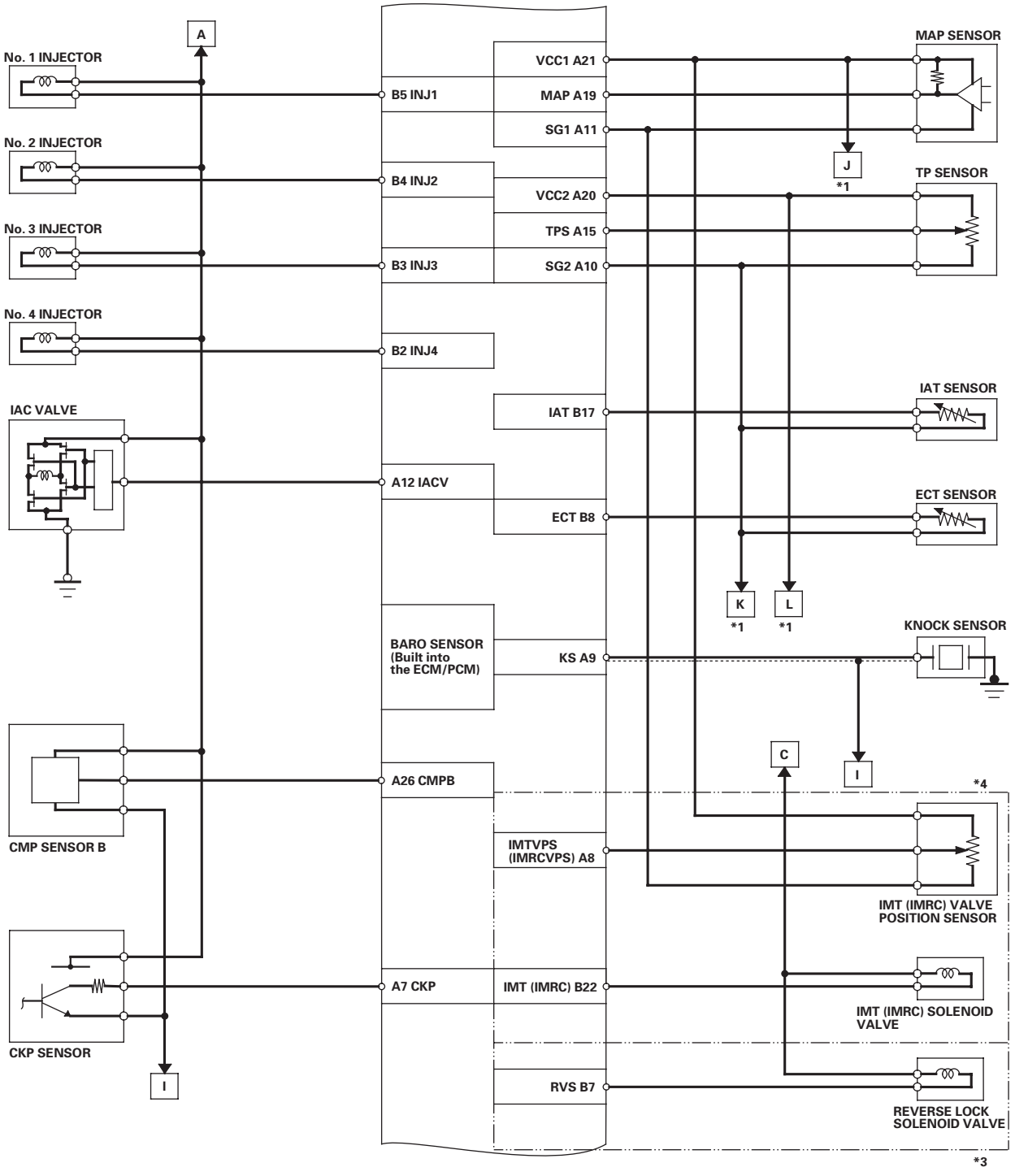

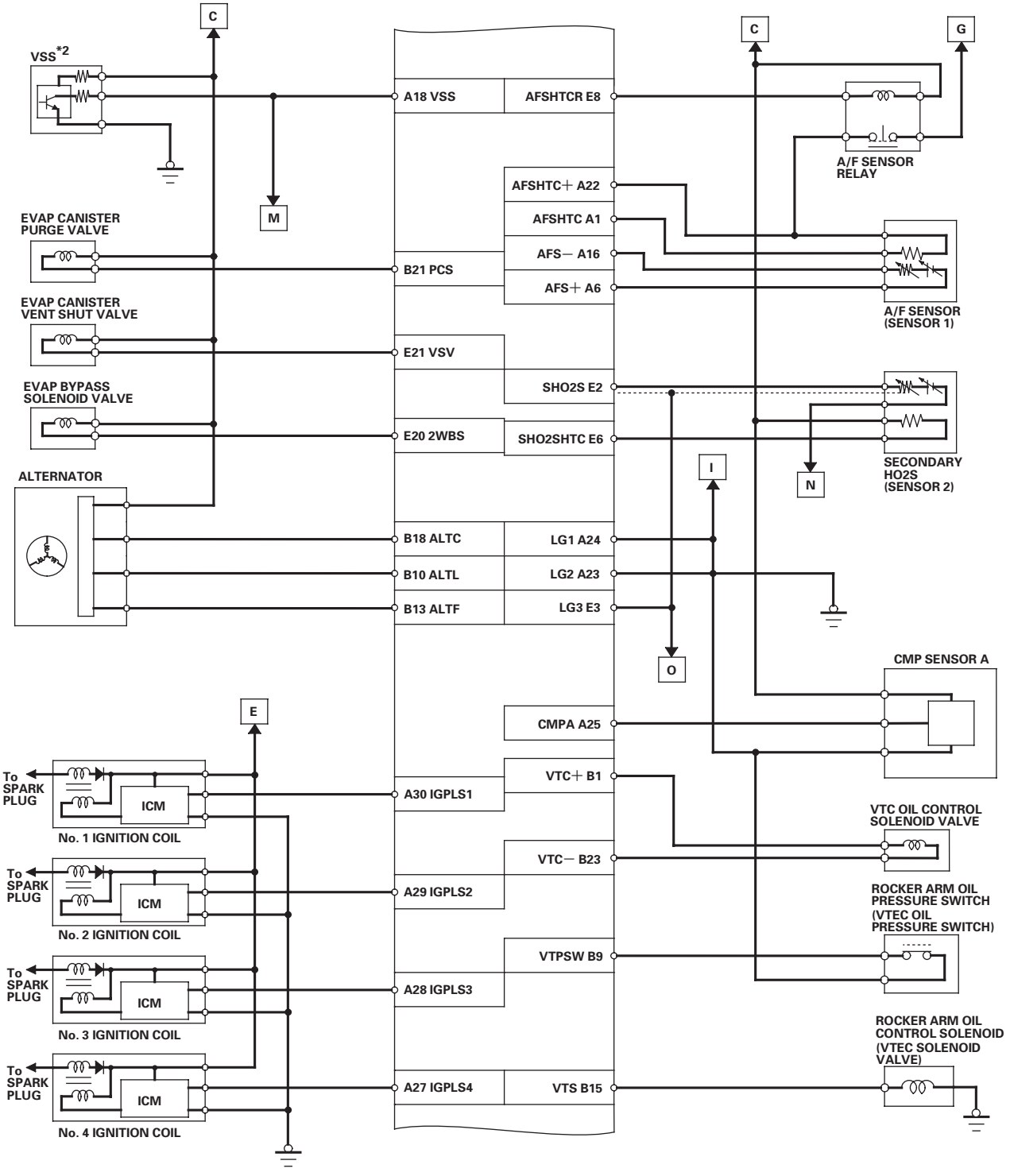
C
VSS*2
A18 VSS
AFSHTCR E8
C
G
A/F SENSOR RELAY
AFSHTC+ A22
AFSHTC A1
AFS− A16
AFS+ A6
M
EVAP CANISTER PURGE VALVE
B21 PCS
A/F SENSOR (SENSOR 1)
EVAP CANISTER VENT SHUT VALVE
E21 VSV
SHO2S E2
EVAP BYPASS SOLENOID VALVE
E20 2WBS
SHO2SHTC E6
SECONDARY HO2S (SENSOR 2)
I
N
ALTERNATOR
B18 ALTC
LG1 A24
B10 ALTL
LG2 A23
B13 ALTF
LG3 E3
O
CMP SENSOR A
E
CMPA A25
To SPARK PLUG
ICM
A30 IGPLS1
VTC+ B1
No. 1 IGNITION COIL
VTC OIL CONTROL SOLENOID VALVE
VTC− B23
To SPARK PLUG
ICM
A29 IGPLS2
ROCKER ARM OIL PRESSURE SWITCH (VTEC OIL PRESSURE SWITCH)
No. 2 IGNITION COIL
VTPSW B9
To SPARK PLUG
ICM
A28 IGPLS3
No. 3 IGNITION COIL
ROCKER ARM OIL CONTROL SOLENOID (VTEC SOLENOID VALVE)
To SPARK PLUG
ICM
A27 IGPLS4
VTS B15
No. 4 IGNITION COIL

(cont'd)

System Description (cont'd)

ECM/PCM Electrical Connections—2002-2004 Models (cont'd)

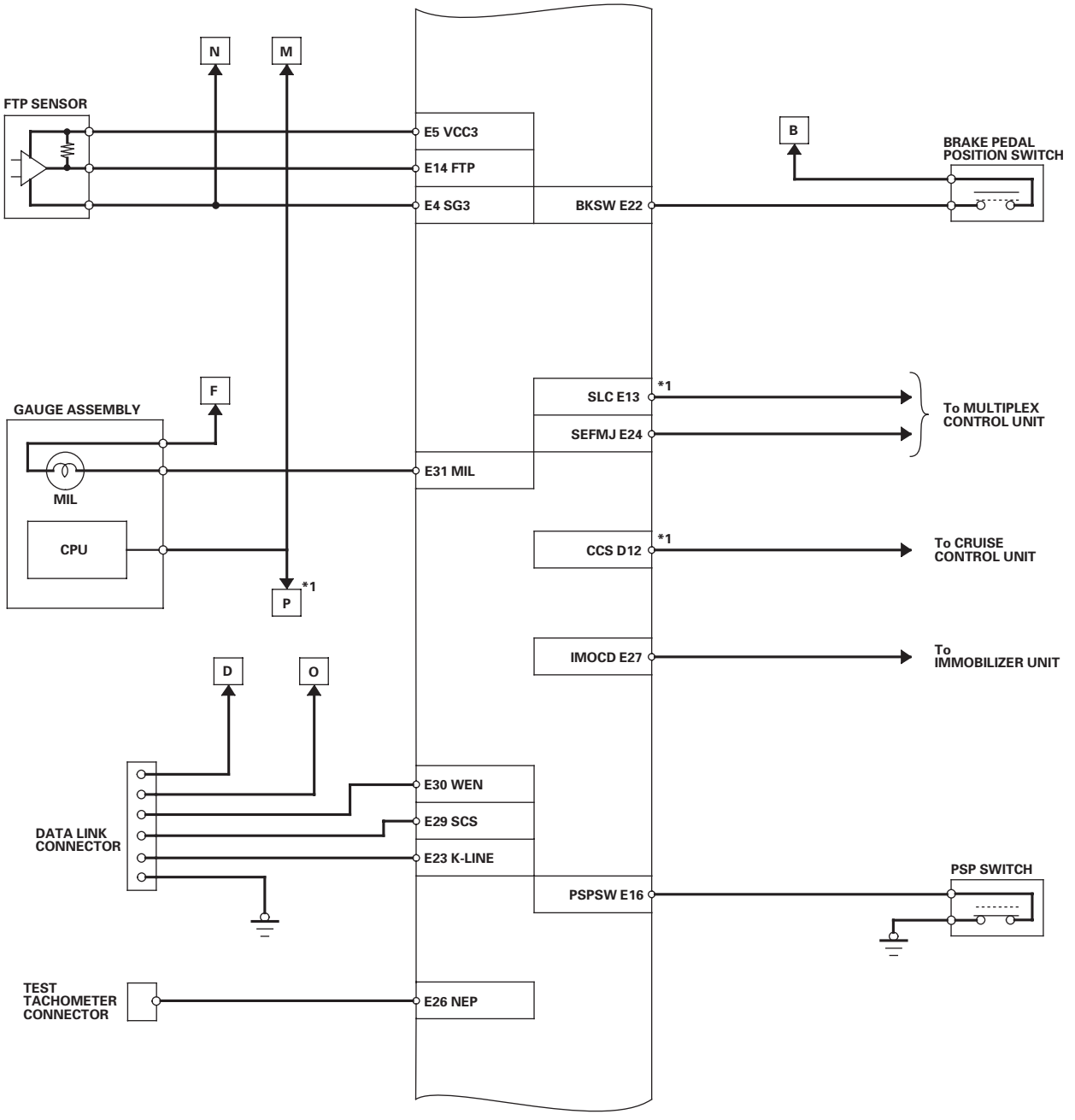

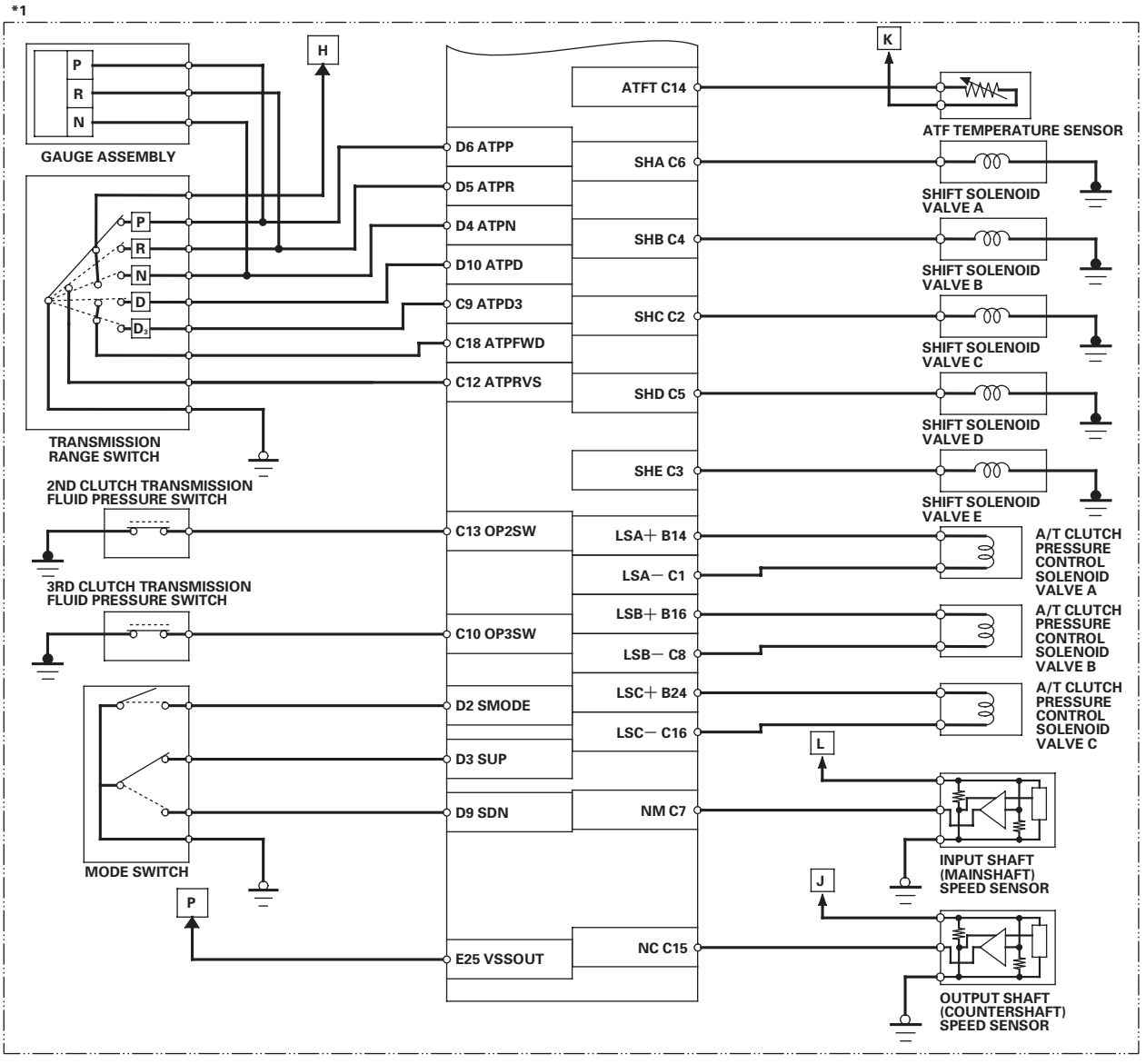

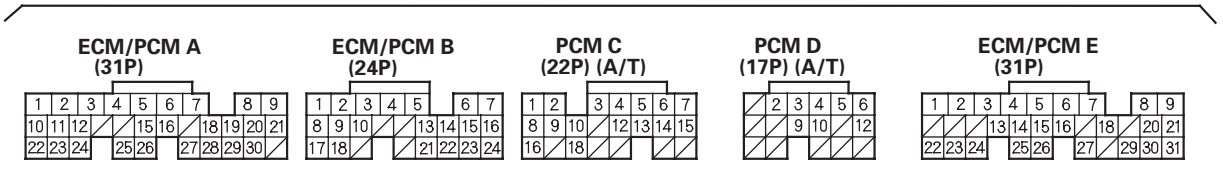

TERMINAL LOCATIONS

(cont'd)

System Description (cont'd)

ECM/PCM Electrical Connections—2005-2006 Models

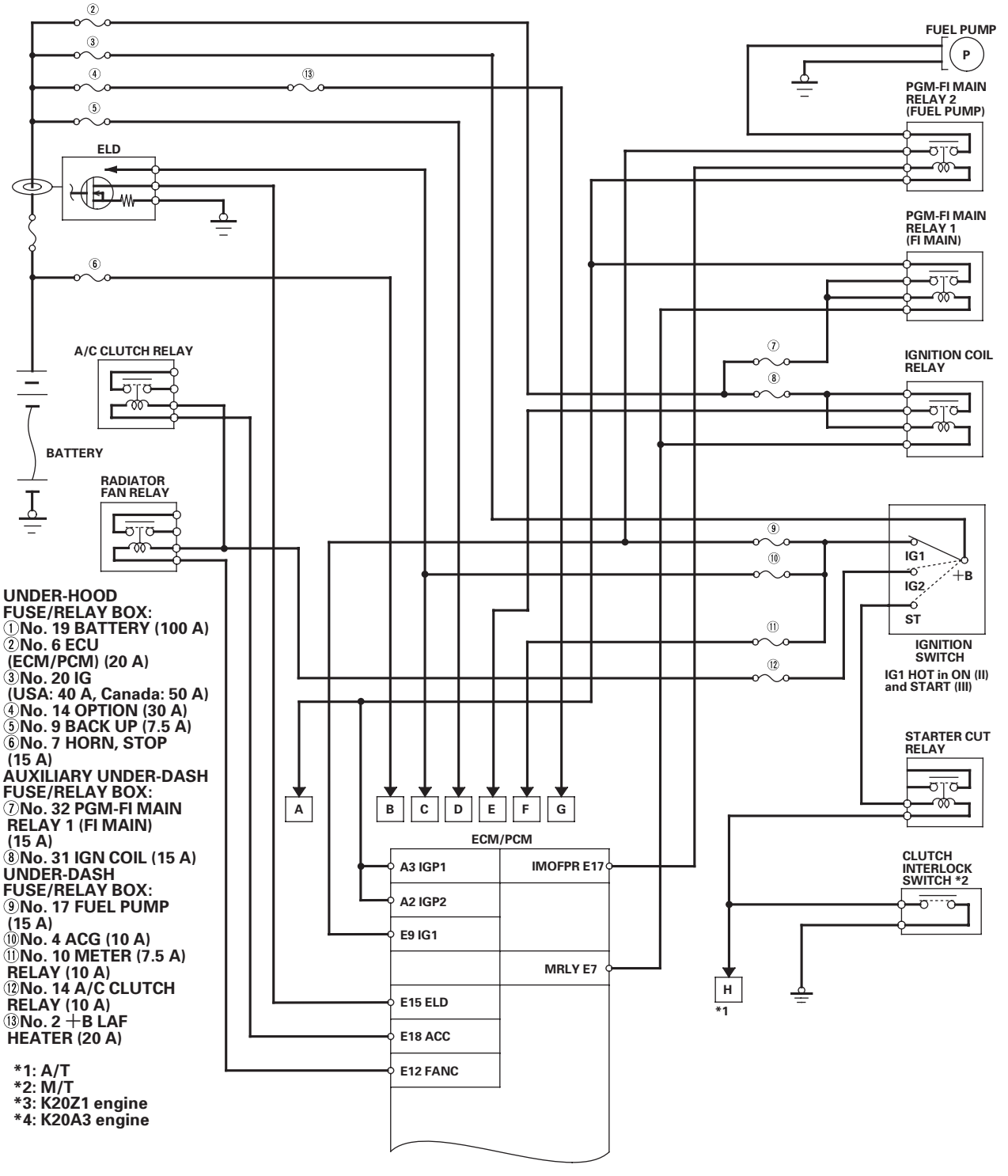

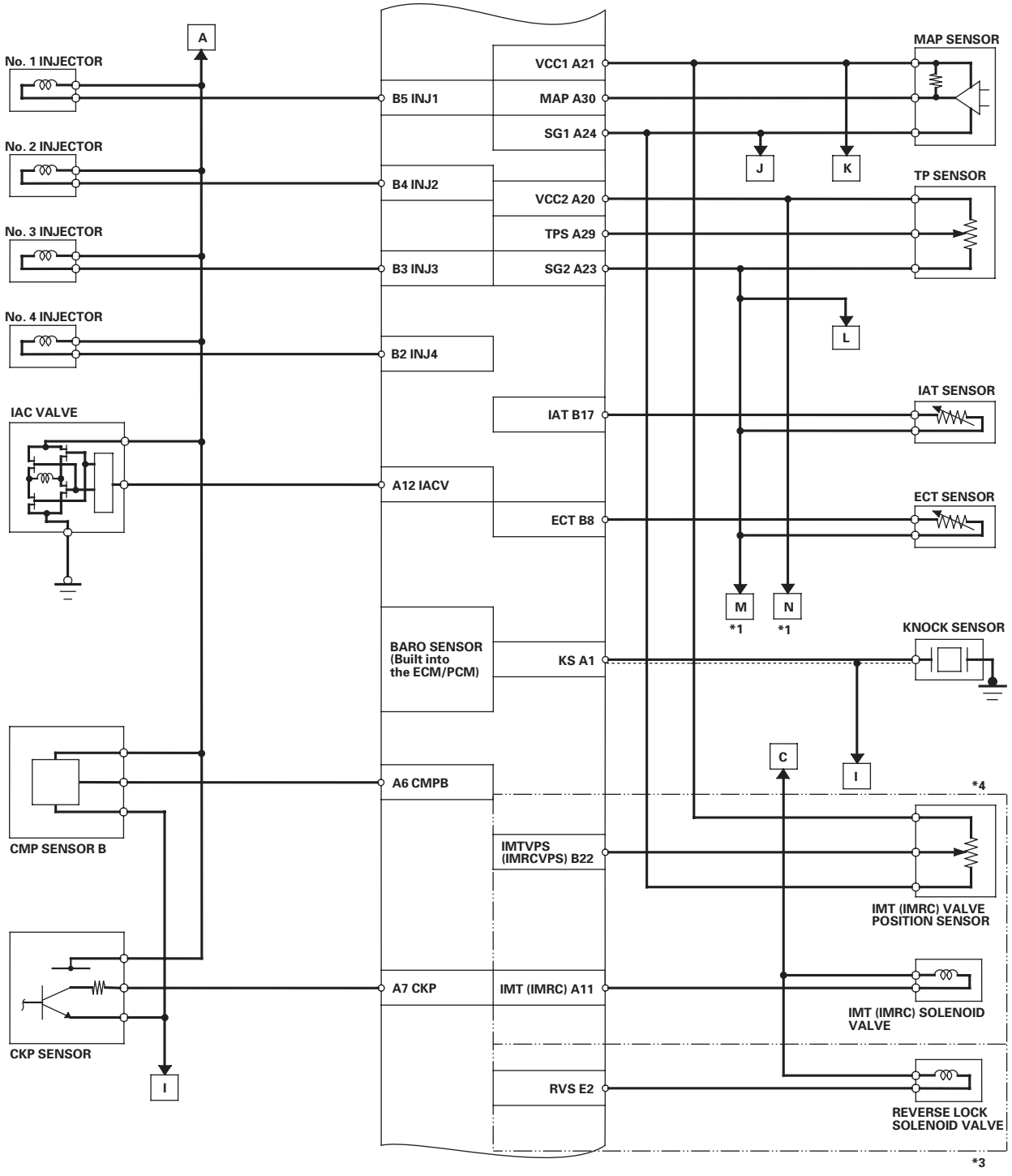
A
No. 1 INJECTOR
No. 2 INJECTOR
No. 3 INJECTOR
No. 4 INJECTOR
IAC VALVE
CMP SENSOR B
CKP SENSOR
I
B5 INJ1
B4 INJ2
B3 INJ3
B2 INJ4
A12 IACV
BARO SENSOR (Built into the ECM/PCM)
A6 CMPB
A7 CKP
VCC1 A21
MAP A30
SG1 A24
VCC2 A20
TPS A29
SG2 A23
IAT B17
ECT B8
KS A1
IMTVPS (IMRCVPS) B22
IMT (IMRC) A11
RVS E2
J
K
L
M
N
*1
*1
C
I
*4
MAP SENSOR
TP SENSOR
IAT SENSOR
ECT SENSOR
KNOCK SENSOR
IMT (IMRC) VALVE POSITION SENSOR
IMT (IMRC) SOLENOID VALVE
REVERSE LOCK SOLENOID VALVE
*3

(cont'd)

System Description (cont'd)

ECM/PCM Electrical Connections—2005-2006 Models (cont'd)

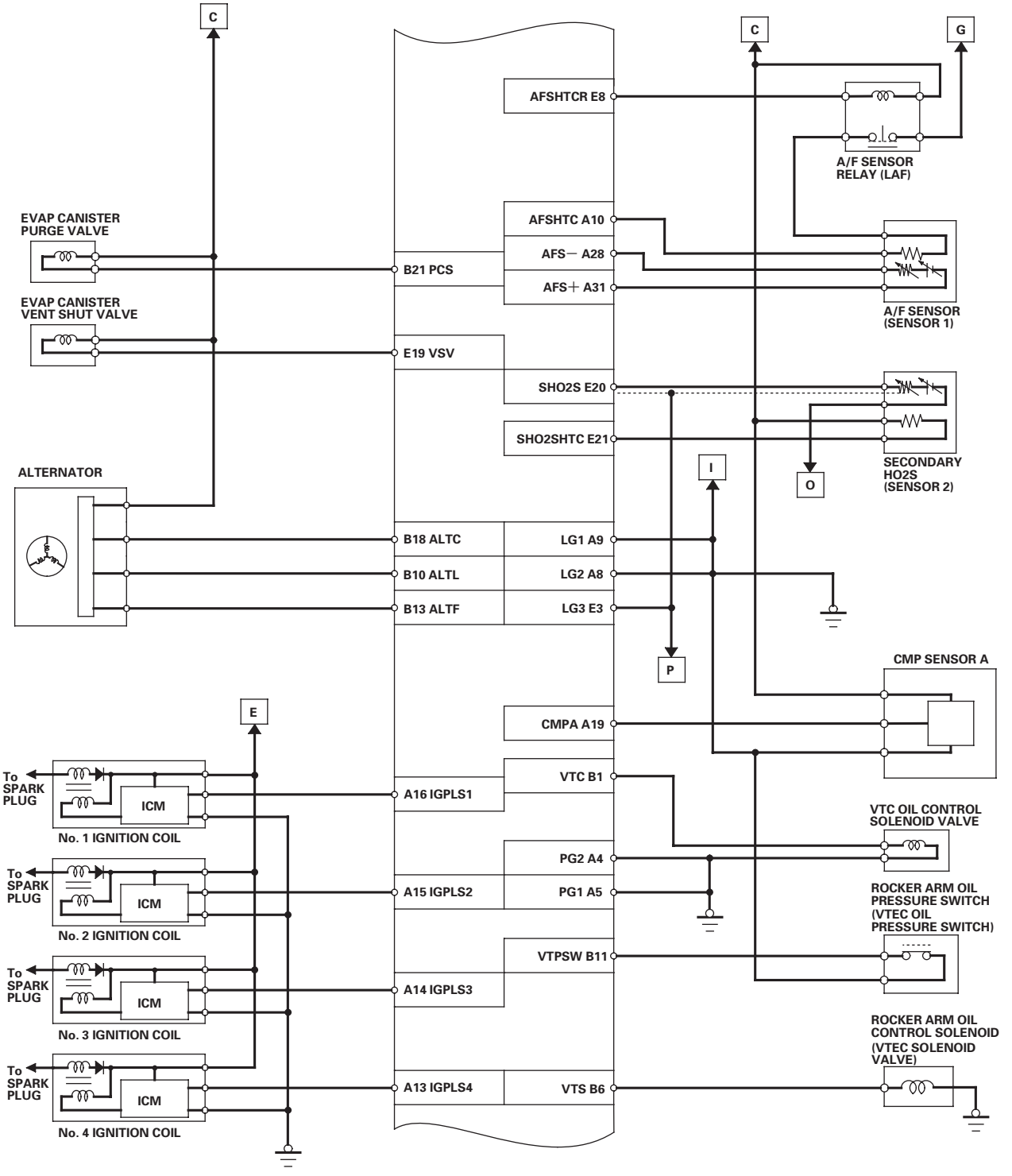

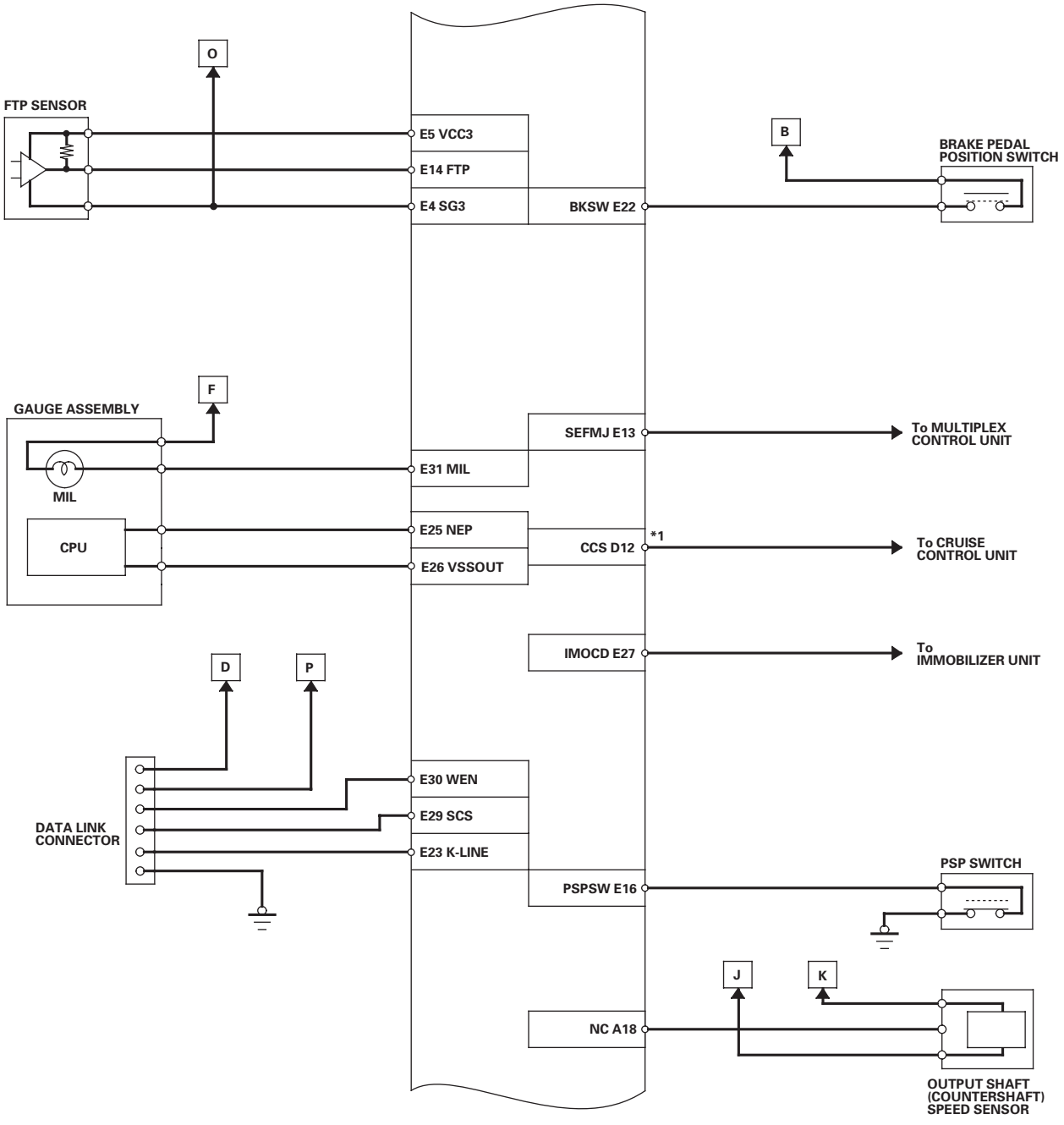
O
FTP SENSOR
E5 VCC3
E14 FTP
E4 SG3
B
BRAKE PEDAL
POSITION SWITCH
BKSW E22
F
GAUGE ASSEMBLY
SEFMJ E13
To MULTIPLEX
CONTROL UNIT
E31 MIL
MIL
CPU
E25 NEP
E26 VSSOUT
CCS D12
*1
To CRUISE
CONTROL UNIT
IMOCD E27
To
IMMOBILIZER UNIT
D
P
E30 WEN
E29 SCS
E23 K-LINE
DATA LINK
CONNECTOR
PSP SWITCH
PSPSW E16
J
K
NC A18
OUTPUT SHAFT
(COUNTERSHAFT)
SPEED SENSOR

(cont'd)

System Description (cont'd)

ECM/PCM Electrical Connections—2005-2006 Models (cont'd)

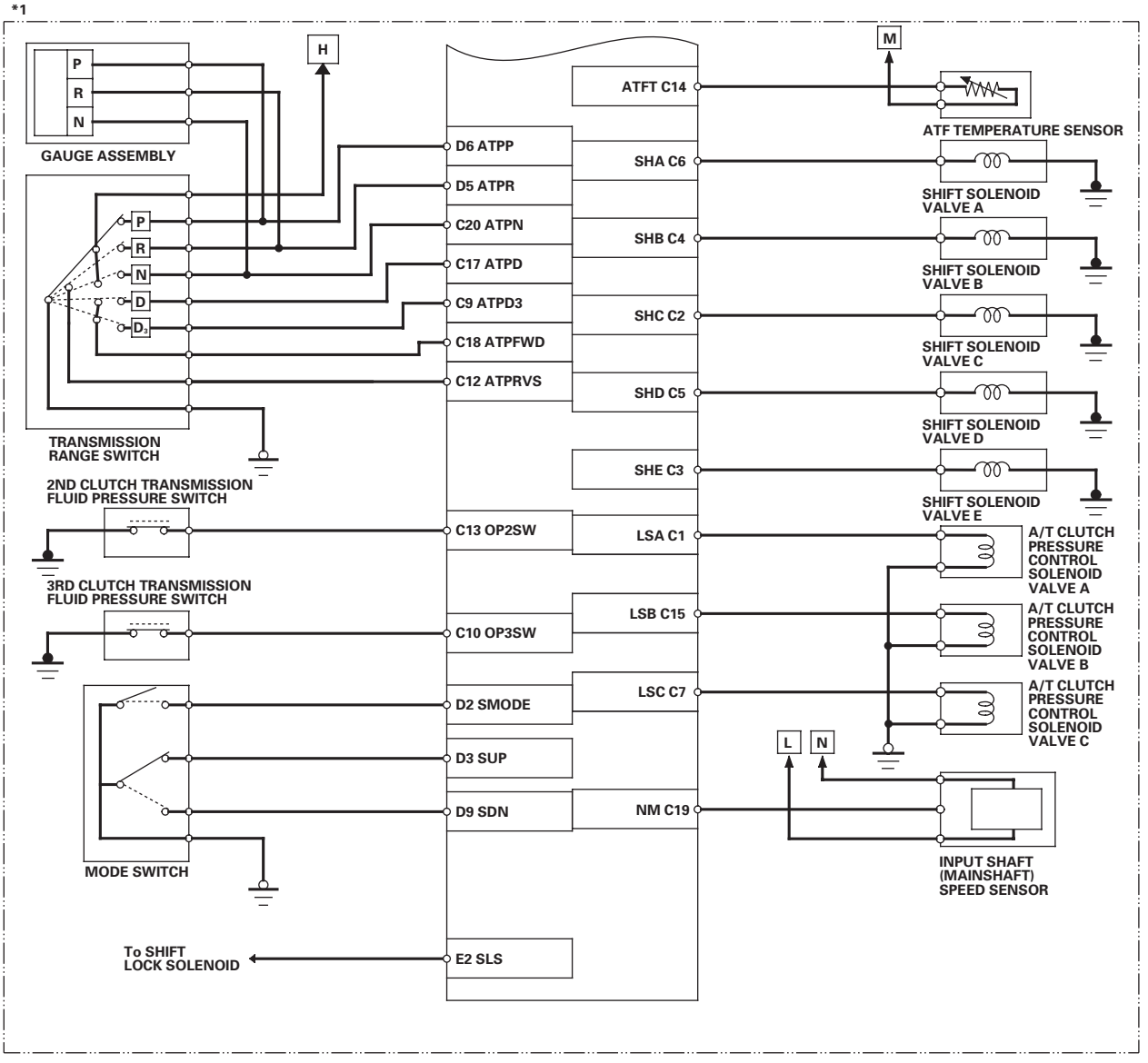

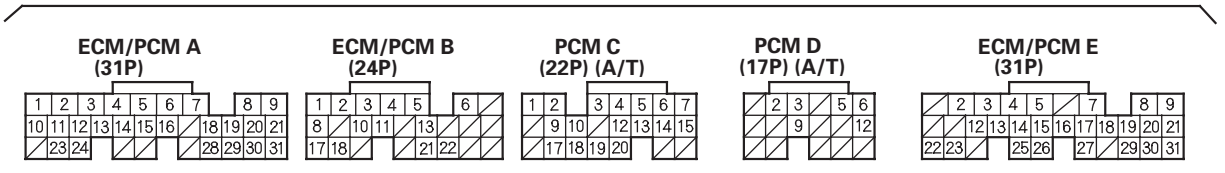

TERMINAL LOCATIONS

ECM/PCM Inputs and Outputs at Connector A (31P)—2002-2004 Models

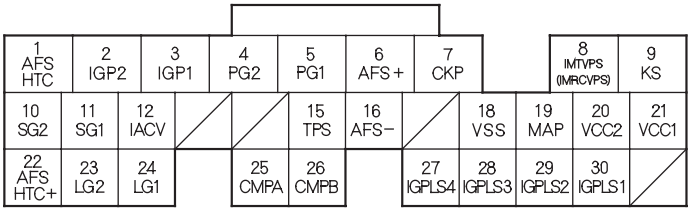

Wire side of female terminals

NOTE: Standard battery voltage is 12 V.

Terminal number	Wire color	Terminal name	Description	Signal
1	BLK/WHT	AFSHTC (AIR FUEL RATIO SENSOR HEATER CONTROL)	Drives air fuel ratio sensor heater	With ignition switch ON (II): battery voltage With fully warmed up engine running: about 0 V
2	YEL/BLK	IGP2 (POWER SOURCE)	Power source for the ECM/PCM circuit	With ignition switch ON (II): battery voltage With ignition switch OFF: about 0 V
3	YEL/BLK	IGP1 (POWER SOURCE)	Power source for the ECM/PCM circuit	With ignition switch ON (II): battery voltage With ignition switch OFF: about 0 V
4	BLK	PG2 (POWER GROUND)	Ground for the ECM/PCM circuit	Less than 1.0 V at all times
5	BLK	PG1 (POWER GROUND)	Ground for the ECM/PCM circuit	Less than 1.0 V at all times
6	RED	AFS+ (AIR FUEL RATIO (A/F) SENSOR, SENSOR 1 +SIDE)	Detects A/F sensor (sensor 1) signal	———
7	BLU	CKP (CRANKSHAFT POSITION SENSOR)	Detects CKP sensor signal	With engine running: pulses
8 *4	RED/YEL	IMTVPS (INTAKE MANIFOLD TUNING VALVE POSITION SENSOR) (IMRCVPS (INTAKE MANIFOLD RUNNER CONTROL VALVE POSITION SENSOR))	Detects IMT (IMRC) position sensor signal	With engine speed below 4,700 rpm: about 3.75 V With engine speed above 4,700 rpm: about 1.25 V
9	RED/BLU	KS (KNOCK SENSOR)	Detects knock sensor signal	With engine knocking: pulses
10	GRN/YEL	SG2 (SENSOR GROUND)	Sensor ground	Less than 1.0 V at all times
11	GRN/WHT	SG1 (SENSOR GROUND)	Sensor ground	Less than 1.0 V at all times
12	BLK/RED	IACV (IDLE AIR CONTROL (IAC) VALVE)	Drives IAC valve	With engine running: duty controlled
15	RED/BLK	TPS (THROTTLE POSITION SENSOR)	Detects TP sensor signal	With throttle fully open: about 4.8 V With throttle fully closed: about 0.5 V
16	RED/YEL	AFS− (AIR FUEL RATIO (A/F) SENSOR, SENSOR 1 −SIDE)	Detects A/F sensor (sensor 1) signal	———
18 *2	WHT/GRN	VSS (VEHICLE SPEED SENSOR)	Detects VSS signal	With ignition switch ON (II) and front wheels rotating: cycles from about 0 V to about 5.0 V or battery voltage

* 2: M/T
* 4: K20A3 engine

(cont'd)

System Description (cont'd)

ECM/PCM Inputs and Outputs at Connector A (31P)—2002-2004 Models

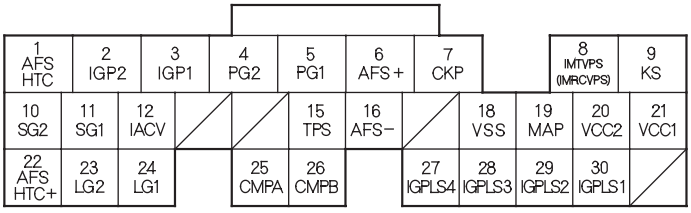

Wire side of female terminals

NOTE: Standard battery voltage is 12 V.

Terminal number	Wire color	Terminal name	Description	Signal
19	GRN/RED	MAP (MANIFOLD ABSOLUTE PRESSURE SENSOR)	Detects MAP sensor signal	With ignition switch ON (II): about 3.0 V At idle: about 1.0 V (depending on engine speed)
20	YEL/BLU	VCC2 (SENSOR VOLTAGE)	Provides sensor voltage	With ignition switch ON (II): about 5.0 V With ignition switch OFF: about 0 V
21	YEL/RED	VCC1 (SENSOR VOLTAGE)	Provides sensor voltage	With ignition switch ON (II): about 5.0 V With ignition switch OFF: about 0 V
22	WHT	AFSHTC+ (AIR FUEL RATIO (A/F) SENSOR HEATER CONTROL +SIDE)	Detects A/F sensor heater voltage	With ignition switch ON (II): battery voltage
23	BRN/YEL	LG2 (LOGIC GROUND)	Ground for the ECM/PCM circuit	Less than 1.0 V at all times
24	BRN/YEL	LG1 (LOGIC GROUND)	Ground for the ECM/PCM circuit	Less than 1.0 V at all times
25	BLU/WHT	CMPA (CAMSHAFT POSITION SENSOR A)	Detects CMP sensor A signal	With engine running: pulses
26	GRN	CMPB (CAMSHAFT POSITION SENSOR B)	Detects CMP sensor B signal	With engine running: pulses
27	BRN	IGPLS4 (No. 4 IGNITION COIL PULSE)	Drives No. 4 ignition coil	With ignition switch ON (II): about 0 V With engine running: pulses
28	WHT/BLU	IGPLS3 (No. 3 IGNITION COIL PULSE)	Drives No. 3 ignition coil	
29	BLU/RED	IGPLS2 (No. 2 IGNITION COIL PULSE)	Drives No. 2 ignition coil	
30	YEL/GRN	IGPLS1 (No. 1 IGNITION COIL PULSE)	Drives No. 1 ignition coil	

ECM/PCM Inputs and Outputs at Connector B (24P)—2002-2004 Models

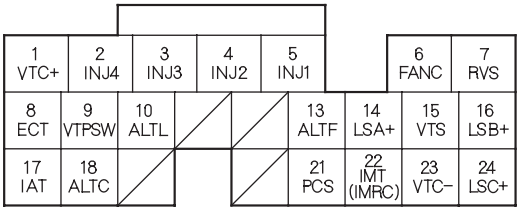

Wire side of female terminals

NOTE: Standard battery voltage is 12 V.

Terminal number	Wire color	Terminal name	Description	Signal
1	BLU/WHT	VTC+ (VTC OIL CONTROL SOLENOID VALVE +SIDE)	Drives VTC oil control solenoid valve	With ignition switch ON (II): about 0 V
2	YEL	INJ4 (No. 4 INJECTOR)	Drives No. 4 injector	Engine running: duty controlled With ignition switch ON (II): 12 V
3	BLU	INJ3 (No. 3 INJECTOR)	Drives No. 3 injector	
4	RED	INJ2 (No. 2 INJECTOR)	Drives No. 2 injector	
5	BRN	INJ1 (No. 1 INJECTOR)	Drives No. 1 injector	
6	GRN	FANC (RADIATOR FAN CONTROL)	Drives radiator fan relay	With radiator fan running: about 0 V With radiator fan stopped: battery voltage
7 *3	GRN/WHT	RVS (REVERSE LOCK SOLENOID VALVE)	Drives reverse lock solenoid valve	With vehicle speed below 9.4 mph (15 km/h): battery voltage With vehicle speed above 12.5 mph (20 km/h): 0 V
8	RED/WHT	ECT (ENGINE COOLANT TEMPERATURE SENSOR)	Detects ECT sensor signal	With ignition switch ON (II): about 0.1—4.8 V (depending on engine coolant temperature)
9	BLU/BLK	VTPSW (ROCKER ARM OIL PRESSURE SWITCH (VTEC OIL PRESSURE SWITCH))	Detects rocker arm oil pressure switch (VTEC oil pressure switch) signal	With engine at low engine speed: about 0 V With engine at high engine speed: battery voltage
10	WHT/BLU	ALTL (ALTERNATOR L SIGNAL)	Detects alternator L signal	With ignition switch ON (II): about 0 V With engine running: battery voltage
13	WHT/RED	ALTF (ALTERNATOR FR SIGNAL)	Detects alternator FR signal	With engine running: about 0—5.0 V (depending on electrical load)
14 *1	RED/BLK	LSA+ (A/T CLUTCH PRESSURE CONTROL SOLENOID VALVE A +SIDE)	Drives A/T clutch pressure control solenoid valve A	With ignition switch ON (II): duty controlled
15	GRN/YEL	VTS (ROCKER ARM OIL CONTROL SOLENOID (VTEC SOLENOID VALVE))	Drives rocker arm oil control solenoid (VTEC solenoid valve)	At idle: about 0 V

* 1: A/T
* 3: K20A2 engine

(cont'd)

System Description (cont'd)

ECM/PCM Inputs and Outputs at Connector B (24P)—2002-2004 Models

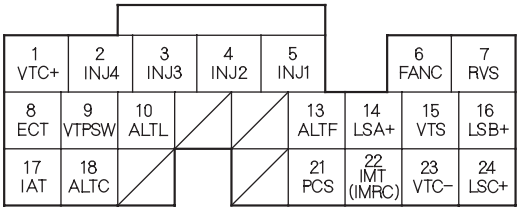

Wire side of female terminals

NOTE: Standard battery voltage is 12 V.

Terminal number	Wire color	Terminal name	Description	Signal
16 * 1	BRN/WHT	LSB+ (A/T CLUTCH PRESSURE CONTROL SOLENOID VALVE B +SIDE)	Drives A/T clutch pressure control solenoid valve B	With ignition switch ON (II): duty controlled
17	RED/YEL	IAT (INTAKE AIR TEMPERATURE SENSOR)	Detects IAT sensor signal	With ignition switch ON (II): about 0.1—4.8 V (depending on intake air temperature)
18	WHT/GRN	ALTC (ALTERNATOR CONTROL)	Sends alternator control signal	With engine running: about 0—5.0 V (depending on electrical load)
21	YEL/BLU	PCS (EVAPORATIVE EMISSION CANISTER PURGE VALVE)	Drives EVAP canister purge valve	With engine running, engine coolant below 149 °F (65 °C): battery voltage With engine running, engine coolant above 149 °F (65 °C): duty controlled
22 * 4	RED/BLU	IMT (INTAKE MANIFOLD TUNING) (IMRC (INTAKE MANIFOLD RUNNER CONTROL SOLENOID VALVE))	Drives IMT (IMRC) solenoid valve	With engine speed below 4,700 rpm: battery voltage With engine speed above 4,700 rpm: about 0 V
23	BLK/WHT	VTC− (VTC OIL CONTROL SOLENOID VALVE −SIDE)	Drives VTC oil control solenoid valve	With ignition switch ON (II): about 0 V
24 * 1	BLU/YEL	LSC+ (A/T CLUTCH PRESSURE CONTROL SOLENOID VALVE C +SIDE)	Drives A/T clutch pressure control solenoid valve C	With ignition switch ON (II): duty controlled

* 1: A/T
* 4: K20A3 engine

PCM Inputs and Outputs at Connector C (22P) *1—2002-2004 Models

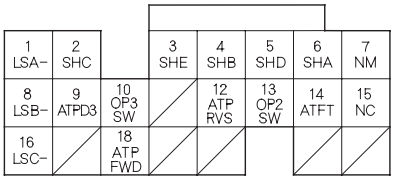

Wire side of female terminals

NOTE: Standard battery voltage is 12 V.

Terminal number	Wire color	Terminal name	Description	Signal
1	WHT/BLK	LSA— (A/T CLUTCH PRESSURE CONTROL SOLENOID VALVE A —SIDE)	Ground for A/T clutch pressure control solenoid valve A	With ignition switch ON (II): current control
2	GRN	SHC (SHIFT SOLENOID VALVE C)	Drives shift solenoid valve C	With engine running in N, or in D, M, or D3 (in 1st, 3rd, 5th gears): battery voltage With engine running in P, R, or in D, M, or D3 (in 2nd, 4th gears): about 0 V
3	YEL	SHE (SHIFT SOLENOID VALVE E)	Drives shift solenoid valve E	With engine running in P, R: battery voltage With engine running in N, or in D, M, or D3 (in 1st, 2nd, 3rd, 4th, 5th gears): about 0 V
4	GRN/WHT	SHB (SHIFT SOLENOID VALVE B)	Drives shift solenoid valve B	With engine running in P, R, N, or D, M, or D3 (in 1st, 2nd gears): battery voltage With engine running in D, M, or D3 (in 3rd, 4th, 5th gears): about 0 V
5	GRN/RED	SHD (SHIFT SOLENOID VALVE D)	Drives shift solenoid valve D	With engine running in D, M, or D3 (in 2nd, 5th gears): battery voltage With engine running in P, R, N, or D, M, or D3 (in 1st, 3rd, 4th gears): about 0 V
6	BLU/BLK	SHA (SHIFT SOLENOID VALVE A)	Drives shift solenoid valve A	With engine running in R, or D, M, or D3 (in 1st, 4th, 5th gears): battery voltage With engine running in P, N, or D, M, or D3 (in 2nd, 3rd gears): about 0V
7	WHT/RED	NM (INPUT SHAFT (MAINSHAFT) SPEED SENSOR)	Detects input shaft (mainshaft) speed sensor signals	With engine running: pulses
8	BLK/RED	LSB— (A/T CLUTCH PRESSURE CONTROL SOLENOID VALVE B —SIDE)	Ground for A/T clutch pressure control solenoid valve B	With ignition switch ON (II): current control
9	RED	ATPD3 (TRANSMISSION RANGE SWITCH D3 POSITION)	Detects transmission range switch D3 position signal	In D3 position: about 0 V In any other position: about 5.0 V or battery voltage
10	BLU/WHT	OP3SW (3RD OIL PRESSURE SWITCH)	Detects 3rd oil pressure switch	With ignition switch ON (II): about 5.0 V
12	RED/WHT	ATPRVS (TRANSMISSION RANGE SWITCH R POSITION)	Detects transmission range switch R position signal	In R position: about 0 V In any other position: about 5.0 V—battery voltage
13	BLU/RED	OP2SW (2ND OIL PRESSURE SWITCH)	Detects 2nd oil pressure switch	With ignition switch ON (II): about 5.0 V
14	RED/YEL	ATFT (ATF TEMPERATURE SENSOR)	Detects ATF temperature sensor signal	With ignition switch ON (II): about 0.2—4.8 V (depending on ATF temperature)
15	BLU	NC (OUTPUT SHAFT (COUNTERSHAFT) SPEED SENSOR)	Detects output shaft (countershaft) speed sensor signals	With ignition switch ON (II), and front wheels rotating: battery voltage
16	WHT/BLU	LSC— (A/T CLUTCH PRESSURE CONTROL SOLENOID VALVE C —SIDE)	Ground for A/T clutch pressure control solenoid valve C	With ignition switch ON (II): current control
18	BLU/YEL	ATPFWD (TRANSMISSION RANGE SWITCH D/D3 POSITION)	Detects transmission range switch D/D3 position signal	In D or D3: about 0 V In any other position: about 5.0 V—battery voltage

* 1: A/T

(cont'd)

System Description (cont'd)

PCM Inputs and Outputs at Connector D (17P)*1—2002-2004 Models

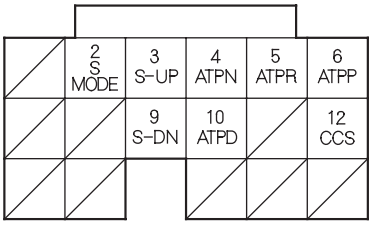

Wire side of female terminals

NOTE: Standard battery voltage is 12 V.

Terminal number	Wire color	Terminal name	Description	Signal
2	BRN	S-MODE (SEQUENTIAL SPORTSHIFT MODE)	Detects sequential sportshift mode switch signal	In sequential sportshift mode (shift lever is positioned in sequential sportshift mode): about 0 V In other than sequential sportshift mode: about 5.0 V
3	WHT/BLU	S-UP (UP SHIFT SWITCH)	Detects upshift switch signal	In sequential sportshift mode and shift lever pushed toward upshift position (marked with +): about 0 V In sequential sportshift mode and shift lever in N position: about 5.0 V
4	BLK/RED	ATPN (TRANSMISSION RANGE SWITCH NEUTRAL POSITION)	Detects transmission range switch N position signal	In N: about 0 V In any other position: about 5.0 V—battery voltage
5	WHT	ATPR (TRANSMISSION RANGE SWITCH R POSITION)	Detects transmission range switch R position signal	In R: about 0 V In any other position: about 5.0 V—battery voltage
6	BLU/BLK	ATPP (TRANSMISSION RANGE SWITCH PARK POSITION)	Detects transmission range switch P position signal	In P: about 0 V In any other position: about 8.5 V
9	BRN/WHT	S-DN (DOWN SHIFT SWITCH)	Detects downshift switch signal	In sequential sportshift mode and shift lever pushed toward downshift position (marked with —): about 0 V In sequential sportshift mode and shift lever in neutral position: about 5.0 V
10	RED	ATPD (TRANSMISSION RANGE SWITCH D POSITION)	Detects transmission range switch D position signal	In D: about 0 V In any other position: about 5.0 V or battery voltage
12	BLU/ORN	CCS (CRUISE CONTROL SIGNAL)	Detects cruise control signal	With ignition switch ON (II): pulses

* 1: A/T

ECM/PCM Inputs and Outputs at Connector E (31P)—2002-2004 Models

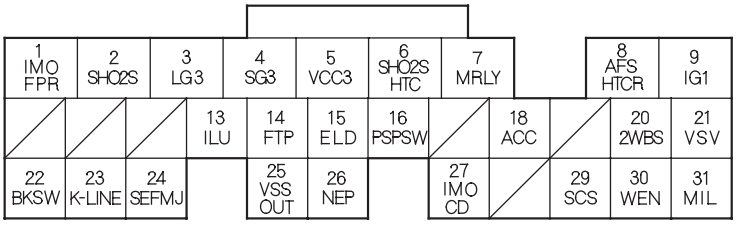

Wire side of female terminals

NOTE: Standard battery voltage is 12 V.

Terminal number	Wire color	Terminal name	Description	Signal
1	GRN/YEL	IMOFPR (IMMOBILIZER FUEL PUMP RELAY)	Drives PGM-FI main relay 2 (FUEL PUMP)	0 V for 2 seconds after turning ignition switch ON (II), then battery voltage
2	WHT/RED	SHO2S (SECONDARY HEATED OXYGEN SENSOR (SECONDARY HO2S), SENSOR 2)	Detects secondary HO2S (sensor 2) signal	With throttle fully opened from idle with fully warmed up engine: above 0.6 V With throttle quickly closed: below 0.4 V
3	BRN/YEL	LG3 (LOGIC GROUND)	Ground for the ECM/PCM control circuit	Less than 1.0 V at all times
4	PNK	SG3 (SENSOR GROUND)	Sensor ground	Less than 1.0 V at all times
5	YEL/BLU	VCC3 (SENSOR VOLTAGE)	Provides sensor voltage	With ignition switch ON (II): about 5.0 V With ignition switch OFF: about 0 V
6	BLK/WHT	SHO2SHTC (SECONDARY HEATED OXYGEN SENSOR (SECONDARY HO2S) HEATER CONTROL)	Drives secondary HO2S heater	With ignition switch ON (II): battery voltage With fully warmed up engine running: duty controlled
7	RED/YEL	MRLY (PGM-FI MAIN RELAY)	Drives PGM-FI main relay 1 (FI MAIN) Power source for the DTC memory	With ignition switch ON (II): about 0 V With ignition switch OFF: battery voltage
8	ORN	AFSHTCR (AIR FUEL RATIO SENSOR HEATER CONTROL RELAY)	Drives air fuel ratio sensor heater relay	With ignition switch ON (II): about 0 V
9	BLK/YEL	IG1 (IGNITION SIGNAL)	Detects ignition signal	With ignition switch ON (II): battery voltage With ignition switch OFF: about 0 V
13 *1	WHT/BLU	SLC (SHIFT LOCK CONTROL)	Shift lock control signal	With ignition switch ON (II) and brake pedal pressed: about 8.5 V
14	LT GRN	FTP (FUEL TANK PRESSURE (FTP) SENSOR)	Detects FTP sensor signal	With ignition switch ON (II) and fuel fill cap open: about 2.5 V
15	GRN/RED	ELD (ELECTRICAL LOAD DETECTOR)	Detects ELD signal	With ignition switch ON (II): about 0.1—4.8 V (depending on electrical load)
16	LT GRN/BLK	PSPSW (POWER STEERING PRESSURE SWITCH SIGNAL)	Detects PSP switch signal	At idle with steering wheel straight ahead: about 0 V At idle with steering wheel at full lock: battery voltage
18	RED	ACC (A/C CLUTCH RELAY)	Drives A/C clutch relay	With compressor ON: about 0 V With compressor OFF: battery voltage

* 1: A/T

(cont'd)

System Description (cont'd)

ECM/PCM Inputs and Outputs at Connector E (31P)—2002-2004 Models

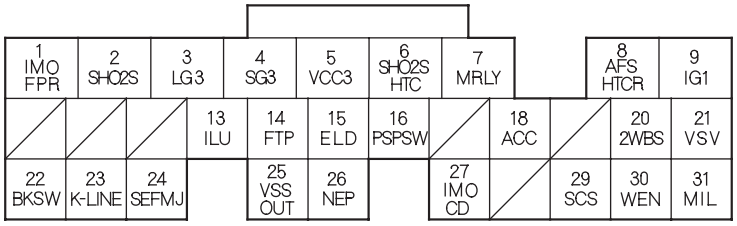

Wire side of female terminals

NOTE: Standard battery voltage is 12 V.

Terminal number	Wire color	Terminal name	Description	Signal
20	BLU/RED	2WBS (EVAPORATIVE EMISSION (EVAP) BYPASS SOLENOID VALVE)	Drives EVAP bypass solenoid valve	With ignition switch ON (II): battery voltage
21	LT GRN/RED	VSV (EVAPORATIVE EMISSION (EVAP) CANISTER VENT SHUT VALVE)	Drives EVAP canister vent shut valve	With ignition switch ON (II): battery voltage
22	WHT/BLK	BKSW (BRAKE PEDAL POSITION SWITCH)	Detects brake pedal position switch signal	With brake pedal released: about 0 V With brake pedal pressed: battery voltage
23	LT BLU	K-LINE	Sends and receives scan tool signals	With ignition switch ON (II): pulses or battery voltage
24	YEL	SEFMJ	Communicates with multiplex control unit	With ignition switch ON (II): about 5.0 V With engine running under load: pulses
25 * 1	BLU/WHT	VSSOUT (VEHICLE SPEED SENSOR OUTPUT SIGNAL)	Sends vehicle speed sensor signal	Depending on vehicle speed: pulses
26	BLU	NEP (ENGINE SPEED PULSE)	Outputs engine speed pulse	With engine running: pulses
27	RED/BLU	IMOCD (IMMOBILIZER CODE)	Detects immobilizer signal	———
29	BRN	SCS (SERVICE CHECK SIGNAL)	Detects service check signal	With the service check signal shorted with the HDS: about 0 V With the service check signal opened: about 5.0 V
30	RED/WHT	WEN (WRITE ENABLE SIGNAL)	Detects write enable signal	With ignition switch ON (II): about 0 V
31	GRN/ORN	MIL (MALFUNCTION INDICATOR LAMP)	Drives MIL	With MIL turned ON: about 0 V With MIL turned OFF: battery voltage

* 1: A/T

ECM/PCM Inputs and Outputs at Connector A (31P)—2005-2006 Models

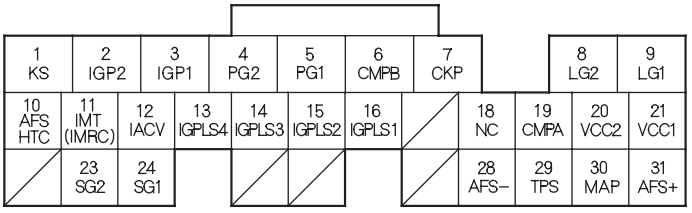

Wire side of female terminals

NOTE: Standard battery voltage is 12 V.

Terminal number	Wire color	Terminal name	Description	Signal
1	RED/BLU	KS (KNOCK SENSOR)	Detects knock sensor signal	With engine knocking: pulses
2	YEL/BLK	IGP2 (POWER SOURCE)	Power source for ECM/PCM circuit	With ignition switch ON (II): battery voltage With ignition switch OFF: about 0 V
3	YEL/BLK	IGP1 (POWER SOURCE)	Power source for ECM/PCM circuit	With ignition switch ON (II): battery voltage With ignition switch OFF: about 0 V
4	BLK	PG2 (POWER GROUND)	Ground circuit for ECM/PCM	Less than 1.0 V at all times
5	BLK	PG1 (POWER GROUND)	Ground circuit for ECM/PCM	Less than 1.0 V at all times
6	GRN	CMPB (CAMSHAFT POSITION SENSOR B)	Detects CMP sensor B signal	With engine running: pulses With the ignition switch ON (II): about 5.0 V
7	BLU	CKP (CRANKSHAFT POSITION SENSOR)	Detects CKP sensor signal	With engine running: pulses With the ignition switch ON (II): about 5.0 V
8	BRN/YEL	LG2 (LOGIC GROUND)	Ground circuit for ECM/PCM	Less than 1.0 V at all times
9	BRN/YEL	LG1 (LOGIC GROUND)	Ground circuit for ECM/PCM	Less than 1.0 V at all times
10	BLK/WHT	AFSHTC (AIR FUEL RATIO (A/F) SENSOR HEATER CONTROL)	Drives A/F sensor heater	With ignition switch ON (II): battery voltage With fully warmed up engine running: about 0 V
11 *1	RED/BLU	IMT (INTAKE MANIFOLD TUNING) (IMRC (INTAKE MANIFOLD RUNNER CONTROL SOLENOID VALVE))	Drives IMT (IMRC) solenoid valve	With engine speed below 4,700 rpm: battery voltage With engine speed above 4,700 rpm: about 0 V
12	BLK/RED	IACV (IDLE AIR CONTROL (IAC) VALVE)	Drives IAC valve	With engine running: duty controlled
13	BRN	IGPLS4 (No. 4 IGNITION COIL PULSE)	Drives No. 4 ignition coil	With ignition switch ON (II): about 0 V With engine running: pulses
14	WHT/BLU	IGPLS3 (No. 3 IGNITION COIL PULSE)	Drives No. 3 ignition coil	
15	BLU/RED	IGPLS2 (No. 2 IGNITION COIL PULSE)	Drives No. 2 ignition coil	
16	YEL/GRN	IGPLS1 (No. 1 IGNITION COIL PULSE)	Drives No. 1 ignition coil	
18	BLU	NC (OUTPUT SHAFT (COUNTERSHAFT) SPEED SENSOR)	Detects output shaft (countershaft) speed sensor signal	With ignition switch ON (II): about 0 V or about 5.0 V While driving: about 2.5 V
19	BLU/WHT	CMPA (CAMSHAFT POSITION SENSOR A)	Detects CMP sensor A signal	With engine running: pulses With ignition switch ON (II): about 5.0 V

* 1: K20A3 engine

(cont'd)

System Description (cont'd)

ECM/PCM Inputs and Outputs at Connector A (31P)—2005-2006 Models

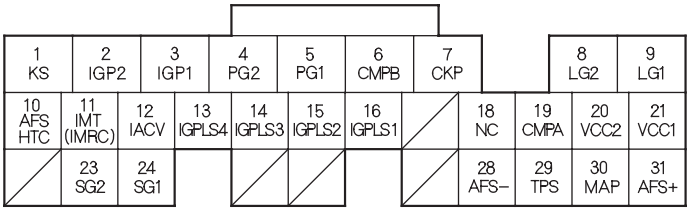

Wire side of female terminals

NOTE: Standard battery voltage is 12 V.

Terminal number	Wire color	Terminal name	Description	Signal
20	YEL/BLU	VCC2 (SENSOR VOLTAGE)	Provides sensor voltage	With ignition switch ON (II): about 5.0 V With ignition switch OFF: about 0 V
21	YEL/RED	VCC1 (SENSOR VOLTAGE)	Provides sensor voltage	With ignition switch ON (II): about 5.0 V With ignition switch OFF: about 0 V
23	GRN/YEL	SG2 (SENSOR GROUND)	Sensor ground	Less than 1.0 V at all times
24	GRN/WHT	SG1 (SENSOR GROUND)	Sensor ground	Less than 1.0 V at all times
28	RED/YEL	AFS— (AIR FUEL RATIO (A/F) SENSOR, SENSOR 1 —SIDE)	Detects A/F sensor (sensor 1) signal	
29	RED/BLK	TPS (THROTTLE POSITION SENSOR)	Detects TP sensor signal	With throttle fully open: about 4.8 V With throttle fully closed: about 0.5 V
30	GRN/RED	MAP (MANIFOLD ABSOLUTE PRESSURE SENSOR)	Detects MAP sensor signal	With ignition switch ON (II): about 3.0 V At idle: about 1.0 V (depending on engine speed)
31	RED	AFS+ (AIR FUEL RATIO (A/F) SENSOR, SENSOR 1 +SIDE)	Detects A/F sensor (sensor 1) signal	

ECM/PCM Inputs and Outputs at Connector B (24P)—2005-2006 Models

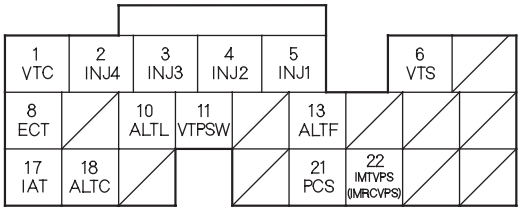

Wire side of female terminals

NOTE: Standard battery voltage is 12 V.

Terminal number	Wire color	Terminal name	Description	Signal
1	BLU/WHT	VTC (VTC OIL CONTROL SOLENOID VALVE)	Drives VTC oil control solenoid valve	With ignition switch ON (II): about 0 V
2	YEL	INJ4 (No. 4 INJECTOR)	Drives No. 4 injector	At idle: duty controlled With ignition switch ON (II): battery voltage
3	BLU	INJ3 (No. 3 INJECTOR)	Drives No. 3 injector	
4	RED	INJ2 (No. 2 INJECTOR)	Drives No. 2 injector	
5	BRN	INJ1 (No. 1 INJECTOR)	Drives No. 1 injector	
6	GRN/YEL	VTS (ROCKER ARM OIL CONTROL SOLENOID (VTEC SOLENOID VALVE))	Drives rocker arm oil control solenoid (VTEC solenoid valve)	At idle: about 0 V
8	RED/WHT	ECT (ENGINE COOLANT TEMPERATURE SENSOR)	Detects ECT sensor signal	With ignition switch ON (II): about 0.5—4.8 V (depending on engine coolant temperature) With fully warmed up engine: about 0.5—0.7 V
10	WHT/BLU	ALTL (ALTERNATOR L SIGNAL)	Detects alternator signal	With ignition switch ON (II): about 0 V With engine running: battery voltage
11	BLU/BLK	VTPSW (ROCKER ARM OIL PRESSURE SWITCH (VTEC OIL PRESSURE SWITCH))	Detects rocker arm oil pressure switch (VTEC oil pressure) switch signal	With engine at low speed: about 0 V With engine at high speed: battery voltage
13	WHT/RED	ALTF (ALTERNATOR FR SIGNAL)	Detects alternator FR signal	With engine running: about 0—5.0 V (depending on electrical load)
17	RED/YEL	IAT (INTAKE AIR TEMPERATURE SENSOR)	Detects IAT sensor signal	With ignition switch ON (II): about 0.5—4.8 V (depending on intake air temperture)
18	WHT/GRN	ALTC (ALTERNATOR CONTROL)	Sends alternator control signal	With engine running and fully warmed up: about 8.0 V
21	YEL/BLU	PCS (EVAPORATIVE EMISSION CANISTER PURGE VALVE)	Drives EVAP canister purge valve	With engine running, engine coolant below 140 °F (60 °C): battery voltage With engine running, engine coolant above 140 °F (60 °C): duty controlled
22 *1	RED/YEL	IMTVPS (INTAKE MANIFOLD TUNING VALVE POSITION SENSOR) (IMRCVPS (INTAKE MANIFOLD RUNNER CONTROL VALVE POSITION SENSOR))	Detects IMT (IMRC) position sensor signal	With engine speed below 4,700 rpm: about 3.75 V With engine speed above 4,700 rpm: about 1.25 V

* 1: K20A3 engine

(cont'd)

System Description (cont'd)

PCM Inputs and Outputs at Connector C (22P)—2005-2006 Models

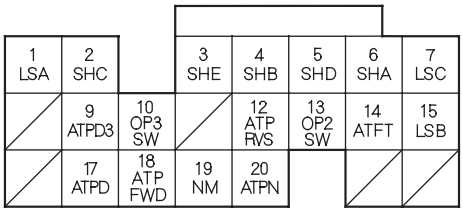

Wire side of female terminals

NOTE: Standard battery voltage is 12 V.

Terminal number	Wire color	Terminal name	Description	Signal
1 *1	RED/BLK	LSA (A/T CLUTCH PRESSURE CONTROL SOLENOID VALVE A)	Drives A/T clutch pressure control solenoid valve A	With ignition switch ON (II): current control
2 *1	GRN	SHC (SHIFT SOLENOID VALVE C)	Drives shift solenoid valve C	With engine running in N, or in D, M, or D3 (in 1st, 3rd, 5th gears): battery voltage With engine running in P, R, or in D, M, or D3 (in 2nd, 4th gears): about 0 V
3 *1	YEL	SHE (SHIFT SOLENOID VALVE E)	Drives shift solenoid valve E	With engine running in P, R: battery voltage With engine running in N, or in D, M, or D3 (in 1st, 2nd, 3rd, 4th, 5th gears): about 0 V
4 *1	GRN/WHT	SHB (SHIFT SOLENOID VALVE B)	Drives shift solenoid valve B	With engine running in P, R, N or D, M, or D3 (in 1st, 2nd gears): battery voltage With engine running in D, M, or D3 (in 3rd, 4th, 5th gears): about 0 V
5 *1	GRN/RED	SHD (SHIFT SOLENOID VALVE D)	Drives shift solenoid valve D	With engine running in D, M, or D3 (in 2nd, 5th gears): battery voltage With engine running in P, R, N or D, M, or D3 (in 1st, 3rd 4th gears): about 0V
6 *1	BLU/BLK	SHA (SHIFT SOLENOID VALVE A)	Drives shift solenoid valve A	With engine running in R, or D, M, or D3 (in 1st, 4th, 5th gears): battery voltage With engine running in P, N, or D, M, or D3 (in 2nd, 3rd gears): about 0 V
7 *1	BLU/YEL	LSC (A/T CLUTCH PRESSURE CONTROL SOLENOID VALVE C)	Drives A/T clutch pressure control solenoid valve C	With ignition switch ON (II): current control
9 *1	RED	ATPD3 (TRANSMISSION RANGE SWITCH D3 POSITION)	Detects transmission range switch D3 position signal input	In D3 position: about 0 V In any other position: battery voltage
10 *1	BLU/WHT	OP3SW (3RD OIL PRESSURE SWITCH)	Detects 3rd oil pressure switch signal output	With ignition switch ON (II): about 5.0 V With 3rd clutch pressure: about 0 V
12 *1	RED/WHT	ATPRVS (TRANSMISSION RANGE SWITCH R POSITION)	Detects transmission range switch R position signal input	In R position: about 0 V In any other position: battery voltage
13 *1	BLU/RED	OP2SW (2ND OIL PRESSURE SWITCH)	Detects 2nd oil pressure switch signal input	With ignition switch ON (II): about 5.0 V With 2nd clutch pressure: about 0 V
14 *1	RED/YEL	ATFT (ATF TEMPERATURE SENSOR)	Detects ATF temperature sensor signal input	With ignition switch ON (II): about 0.2—4.8 V (depending on ATF temperature)

* 1: A/T

PCM Inputs and Outputs at Connector C (22P)—2005-2006 Models

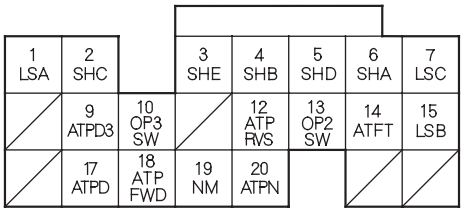

Wire side of female terminals

NOTE: Standard battery voltage is 12 V.

Terminal number	Wire color	Terminal name	Description	Signal
15 * 1	BRN/WHT	LSB (A/T CLUTCH PRESSURE CONTROL SOLENOID VALVE B)	Drives A/T clutch pressure control solenoid valve B	With ignition switch ON (II): current control
17 * 1	YEL	ATPD (TRANSMISSION RANGE SWITCH D POSITION)	Detects transmission range switch D position signal	In D position: about 0 V In any other position: battery voltage
18 * 1	BLU/YEL	ATPFWD (TRANSMISSION RANGE SWITCH D/2 POSITION)	Detects transmission range switch D, 2 position signal	In D, and 2 position: about 0 V In any other position: battery voltage
19 * 1	WHT/RED	NM (INPUT SHAFT (MAINSHAFT) SPEED SENSOR)	Detects input shaft (mainshaft) speed sensor signal	With ignition switch ON (II): about 0 V or about 5.0 V With engine running in N position: about 2.5 V
20 * 1	RED/BLK	ATPN (TRANSMISSION RANGE SWITCH NEUTRAL POSITION)	Detects transmission range switch N position signal	In N position: about 0 V In any other position: battery voltage

* 1: A/T

(cont'd)

System Description (cont'd)

ECM/PCM Inputs and Outputs at Connector D (17P)—2005-2006 Models

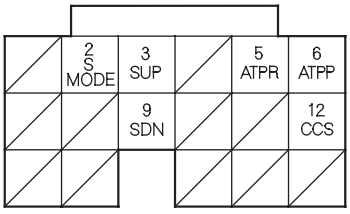

Wire side of female terminals

NOTE: Standard battery voltage is 12 V.

Terminal number	Wire color	Terminal name	Description	Signal
2 *1	BRN	SMODE (SEQUENTIAL SPORT SHIFT MODE)	Detects sequential sportshift mode switch signal	In M position: about 0 V In other than M position: battery voltage
3 *1	WHT/BLU	SUP (UP SHIFT SWITCH)	Detects upshift switch signal	In M position and shift lever pushed toward upshift position: about 0 V In M position and shift lever in neutral position: battery voltage
5 *1	WHT	ATPR (TRANSMISSION RANGE SWITCH R POSITION)	Detects transmission range switch R position signal	In R position: about 0 V In any other position: battery voltage
6 *1	BLU/BLK	ATPP (TRANSMISSION RANGE SWITCH PARK POSITION)	Detects transmission range switch Park position signal	In P position: about 0 V In any other position: battery voltage
9 *1	BRN/WHT	SDN (DOWN SHIFT SWITCH)	Detects downshift switch signal	In M position and shift lever pushed toward downshift position: about 0 V In M position and shift lever in neutral position: battery voltage
12 *1	BLU/ORN	CCS (CRUISE CONTROL SIGNAL)	Detects cruise control signal	With ignition switch ON (II): pulses

* 1: A/T

ECM/PCM Inputs and Outputs at Connector E (31P)—2005-2006 Models

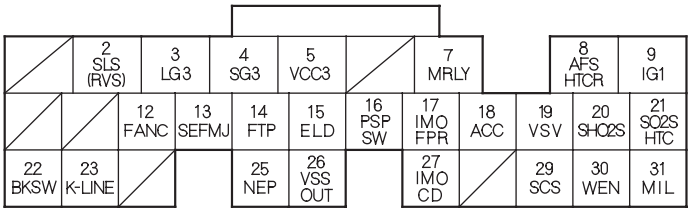

Wire side of female terminals

NOTE: Standard battery voltage is 12 V.

Terminal number	Wire color	Terminal name	Description	Signal
2 *1	WHT/BLU	SLS (SHIFT LOCK SOLENOID)	Drives shift lock solenoid	With ignition switch ON (II), in P position, brake pedal pressed, and accelerator released: about 0 V
2 *2	YEL/RED	RVS (REVERSE LOCK SOLENOID VALVE)	Drives reverse lock solenoid valve	With vehicle speed below 9.4 mph (15 km/h): battery voltage With vehicle speed above 12.5 mph (20 km/h): about 0 V
3	BRN/YEL	LG3 (LOGIC GROUND)	Ground for ECM/PCM control circuit	Less than 1.0 V at all times
4	PNK	SG3 (SENSOR GROUND)	Sensor ground	Less than 1.0 V at all times
5	YEL/BLU	VCC3 (SENSOR VOLTAGE)	Provides sensor voltage	With ignition switch ON (II): about 5.0 V With ignition switch OFF: about 0 V
7	RED/YEL	MRLY (PGM-FI MAIN RELAY)	Drives PGM-FI main relay 1 (FI MAIN) Power source for DTC memory	With ignition switch ON (II): about 0 V With ignition switch OFF: battery voltage
8	ORN	AFSHTCR (AIR FUEL RATIO (A/F) SENSOR HEATER CONTROL RELAY)	Drives A/F sensor heater relay	With ignition switch ON (II): about 0 V
9	BLK/YEL	IG1 (IGNITION SIGNAL)	Detects ignition signal	With ignition switch ON (II): battery voltage With ignition switch OFF: about 0 V
12	GRN/WHT	FANC (RADIATOR FAN CONTROL)	Drives radiator fan relay	With radiator fan running: about 0 V With radiator fan stopped: battery voltage
13	YEL	SEFMJ	Communicates with multiplex control unit	With ignition switch ON (II): about 5.0 V With engine running under load: pulses
14	LT GRN	FTP (FUEL TANK PRESSURE (FTP) SENSOR)	Detects FTP sensor signal	With ignition switch ON (II) and fuel fill cap open: about 2.5 V
15	GRN/RED	ELD (ELECTRICAL LOAD DETECTOR)	Detects ELD signal	With ignition switch ON (II): about 0.1—4.8 V (depending on electrical load)
16	LT GRN/BLK	PSPSW (POWER STEERING PRESSURE SWITCH SIGNAL)	Detects PSP switch signal	At idle with steering wheel straight ahead: about 0 V At idle with steering wheel at full lock: battery voltage
17	GRN/YEL	IMOFPR (IMMOBILIZER FUEL PUMP RELAY)	Drives PGM-FI main relay 2 (FUEL PUMP)	0 V for 2 seconds after turning ignition switch ON (II), then battery voltage
18	RED	ACC (A/C CLUTCH RELAY)	Drives A/C clutch relay	With compressor ON: about 0 V With compressor OFF: battery voltage
19	LT GRN/RED	VSV (EVAPORATIVE EMISSION (EVAP) CANISTER VENT SHUT VALVE)	Drives EVAP canister vent shut valve	With ignition switch ON (II): battery voltage

* 1: A/T
* 2: K20Z1 engine

(cont'd)

System Description (cont'd)

ECM/PCM Inputs and Outputs at Connector E (31P)—2005-2006 Models

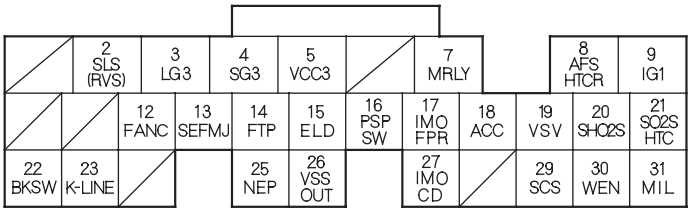

Wire side of female terminals

NOTE: Standard battery voltage is 12 V.

Terminal number	Wire color	Terminal name	Description	Signal
20	WHT/RED	SHO2S (SECONDARY HEATED OXYGEN SENSOR (SECONDAY HO2S), SENSOR 2)	Detects secondary HO2S (sensor 2) signal	With throttle fully closed at idle and fully warmed up engine: above 0.6 V With throttle quickly closed: below 0.4 V
21	BLK/WHT	SO2SHTC (SECONDARY HEATED OXYGEN SENSOR (SECONDAY HO2S) HEATER CONTROL)	Drives secondary HO2S heater	With ignition switch ON (II): battery voltage With fully warmed up engine running: duty controlled
22	WHT/BLK	BKSW (BRAKE PEDAL POSITION SWITCH)	Detects brake pedal position switch signal	With brake pedal released: about 0 V With brake pedal pressed: battery voltage
23	LT BLU	K-LINE	Sends and receives HDS signals	With ignition switch ON (II): pulses or battery voltage
25	BLU	NEP (ENGINE SPEED PULSE)	Outputs engine speed pulse	With engine running: pulses
26	BLU/WHT	VSSOUT (VEHICLE SPEED SENSOR OUTPUT SIGNAL)	Sends vehicle speed sensor signal	Depending on vehicle speed: pulses With ignition switch ON (II): battery voltage
27	RED/BLU	IMOCD (IMMOBILIZER CODE)	Detects immobilizer signal	
29	BRN	SCS (SERVICE CHECK SIGNAL)	Detects service check signal	With the service check signal shorted using HDS: about 0 V With the service check signal open: about 5.0 V
30	RED/WHT	WEN (WRITE ENABLE SIGNAL)	Detects write enable signal	With ignition switch ON (II): about 0 V
31	GRN/ORN	MIL (MALFUNCTION INDICATOR LAMP)	Drives MIL	With MIL turned ON: about 0 V With MIL turned OFF: battery voltage

Vacuum Hose Routing

K20A2/K20Z1 engines

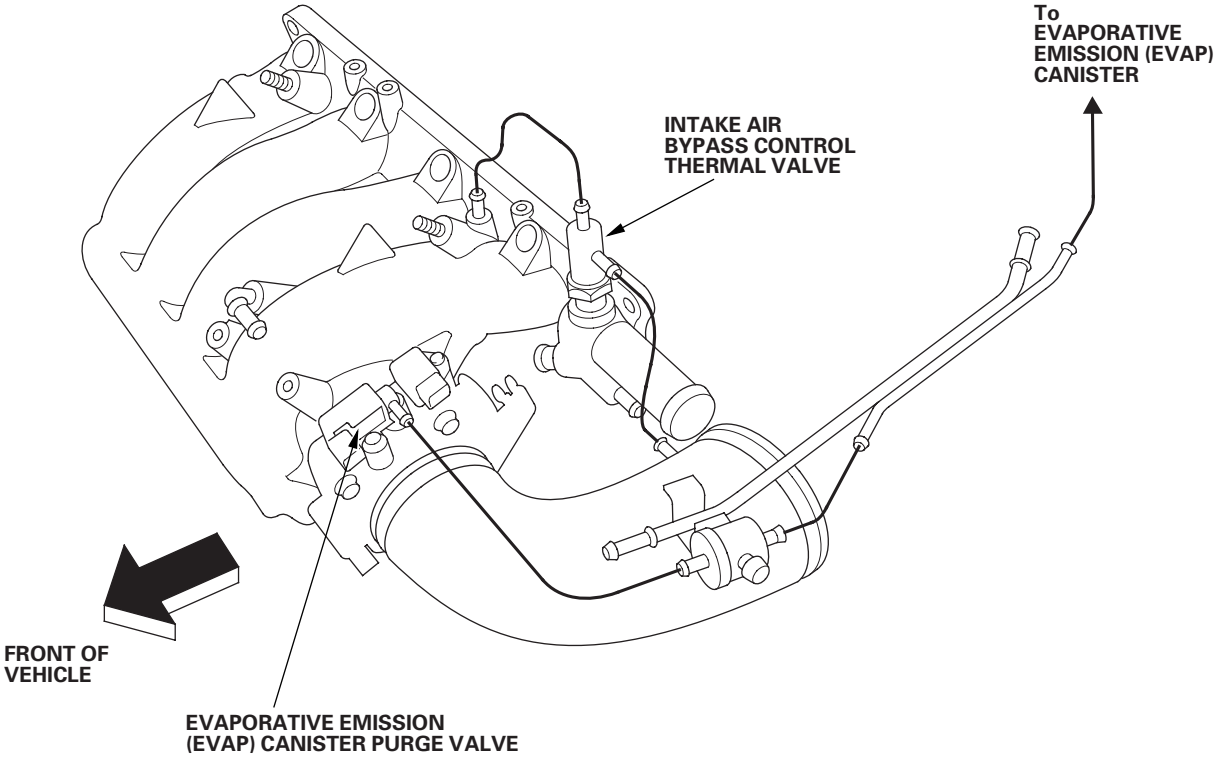

(cont'd)

System Description (cont'd)

Vacuum Hose Routing

K20A3 engine

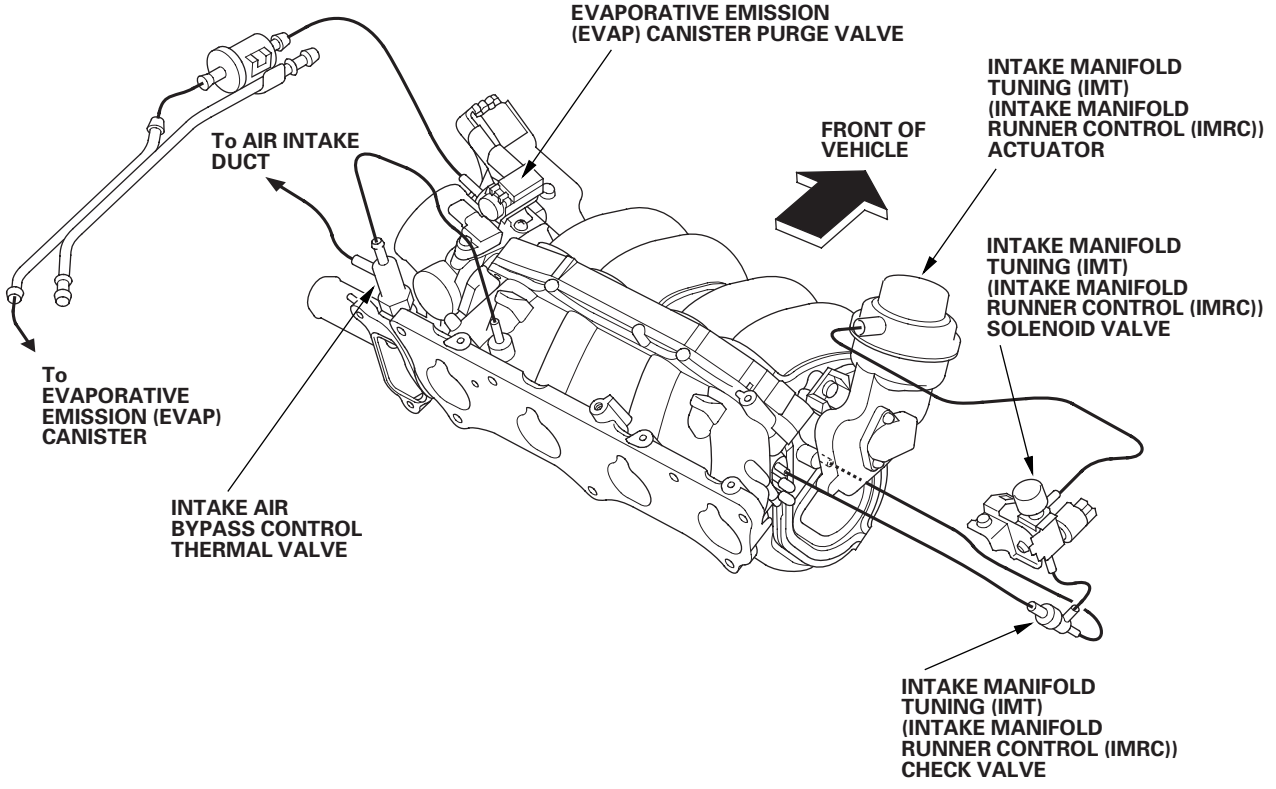

Vacuum Distribution

K20A2 engine

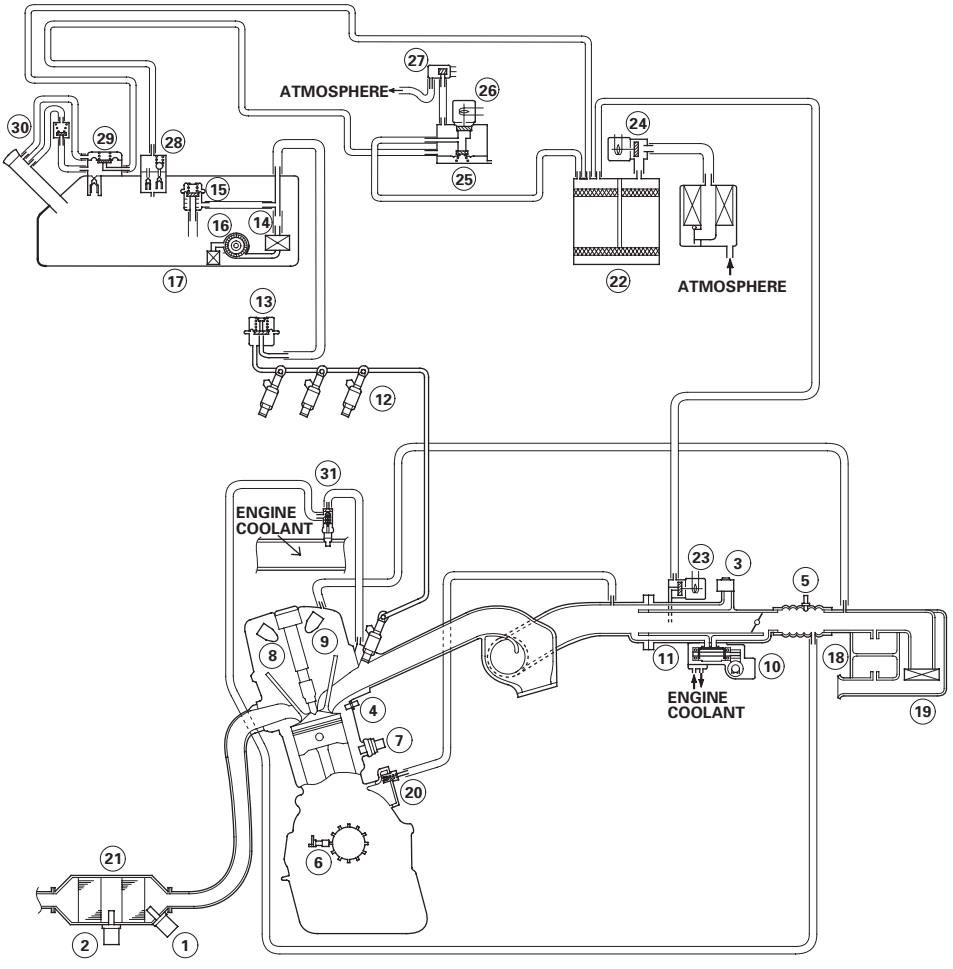

① AIR FUEL RATIO (A/F) SENSOR (SENSOR 1)
② SECONDARY HEATED OXYGEN SENSOR (SECONDARY HO2S) (SENSOR 2)
③ MANIFOLD ABSOLUTE PRESSURE (MAP) SENSOR
④ ENGINE COOLANT TEMPERATURE (ECT) SENSOR
⑤ INTAKE AIR TEMPERATURE (IAT) SENSOR
⑥ CRANKSHAFT POSITION (CKP) SENSOR
⑦ KNOCK SENSOR (KS)
⑧ CAMSHAFT POSITION (CMP) SENSOR A
⑨ CAMSHAFT POSITION (CMP) SENSOR B
⑩ IDLE AIR CONTROL (IAC) VALVE
⑪ THROTTLE BODY
⑫ INJECTOR
⑬ FUEL PULSATION DAMPER
⑭ FUEL FILTER
⑮ FUEL PRESSURE REGULATOR
⑯ FUEL PUMP
⑰ FUEL TANK
⑱ RESONATOR
⑲ AIR CLEANER
⑳ POSITIVE CRANKCASE VENTILATION (PCV) VALVE
㉑ THREE WAY CATALYTIC CONVERTER
㉒ EVAPORATIVE EMISSION (EVAP) CANISTER
㉓ EVAPORATIVE EMISSION (EVAP) CANISTER PURGE VALVE
㉔ EVAPORATIVE EMISSION (EVAP) CANISTER VENT SHUT VALVE
㉕ EVAPORATIVE EMISSION (EVAP) TWO WAY VALVE
㉖ EVAPORATIVE EMISSION (EVAP) BYPASS SOLENOID VALVE
㉗ FUEL TANK PRESSURE (FTP) SENSOR
㉘ EVAPORATIVE EMISSION (EVAP) VALVE
㉙ FUEL TANK VAPOR CONTROL VALVE
㉚ FUEL TANK VAPOR RECIRCULATION VALVE
㉛ INTAKE AIR BYPASS CONTROL THERMAL VALVE

(cont'd)

System Description (cont'd)

Vacuum Distribution

K20A3 engine—2002-2004 models

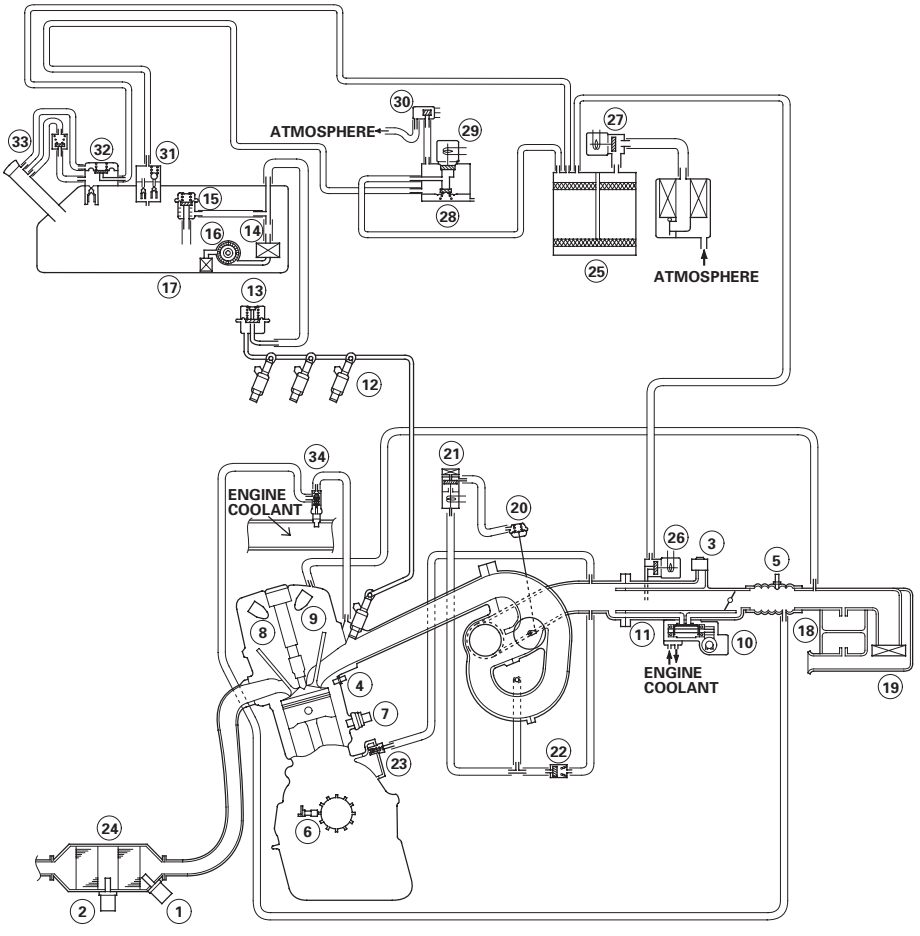

① AIR FUEL RATIO (A/F) SENSOR (SENSOR 1)
② SECONDARY HEATED OXYGEN SENSOR (SECONDARY HO2S) (SENSOR 2)
③ MANIFOLD ABSOLUTE PRESSURE (MAP) SENSOR
④ ENGINE COOLANT TEMPERATURE (ECT) SENSOR
⑤ INTAKE AIR TEMPERATURE (IAT) SENSOR
⑥ CRANKSHAFT POSITION (CKP) SENSOR
⑦ KNOCK SENSOR (KS)
⑧ CAMSHAFT POSITION (CMP) SENSOR A
⑨ CAMSHAFT POSITION (CMP) SENSOR B
⑩ IDLE AIR CONTROL (IAC) VALVE
⑪ THROTTLE BODY
⑫ INJECTOR
⑬ FUEL PULSATION DAMPER
⑭ FUEL FILTER
⑮ FUEL PRESSURE REGULATOR
⑯ FUEL PUMP
⑰ FUEL TANK
⑱ RESONATOR
⑲ AIR CLEANER
⑳ INTAKE MANIFOLD TUNING (IMT) (INTAKE MANIFOLD RUNNER CONTROL (IMRC)) ACTUATOR
㉑ INTAKE MANIFOLD TUNING (IMT) (INTAKE MANIFOLD RUNNER CONTROL (IMRC)) SOLENOID VALVE
㉒ INTAKE MANIFOLD TUNING (IMT) (INTAKE MANIFOLD RUNNER CONTROL (IMRC)) CHECK VALVE
㉓ POSITIVE CRANKCASE VENTILATION (PCV) VALVE
㉔ THREE WAY CATALYTIC CONVERTER
㉕ EVAPORATIVE EMISSION (EVAP) CANISTER
㉖ EVAPORATIVE EMISSION (EVAP) CANISTER PURGE VALVE
㉗ EVAPORATIVE EMISSION (EVAP) CANISTER VENT SHUT VALVE
㉘ EVAPORATIVE EMISSION (EVAP) TWO WAY VALVE
㉙ EVAPORATIVE EMISSION (EVAP) BYPASS SOLENOID VALVE
㉚ FUEL TANK PRESSURE (FTP) SENSOR
㉛ EVAPORATIVE EMISSION (EVAP) VALVE
㉜ FUEL TANK VAPOR CONTROL VALVE
㉝ FUEL TANK VAPOR RECIRCULATION VALVE
㉞ INTAKE AIR BYPASS CONTROL THERMAL VALVE

Vacuum Distribution

K20Z1 engine—2005-2006 models

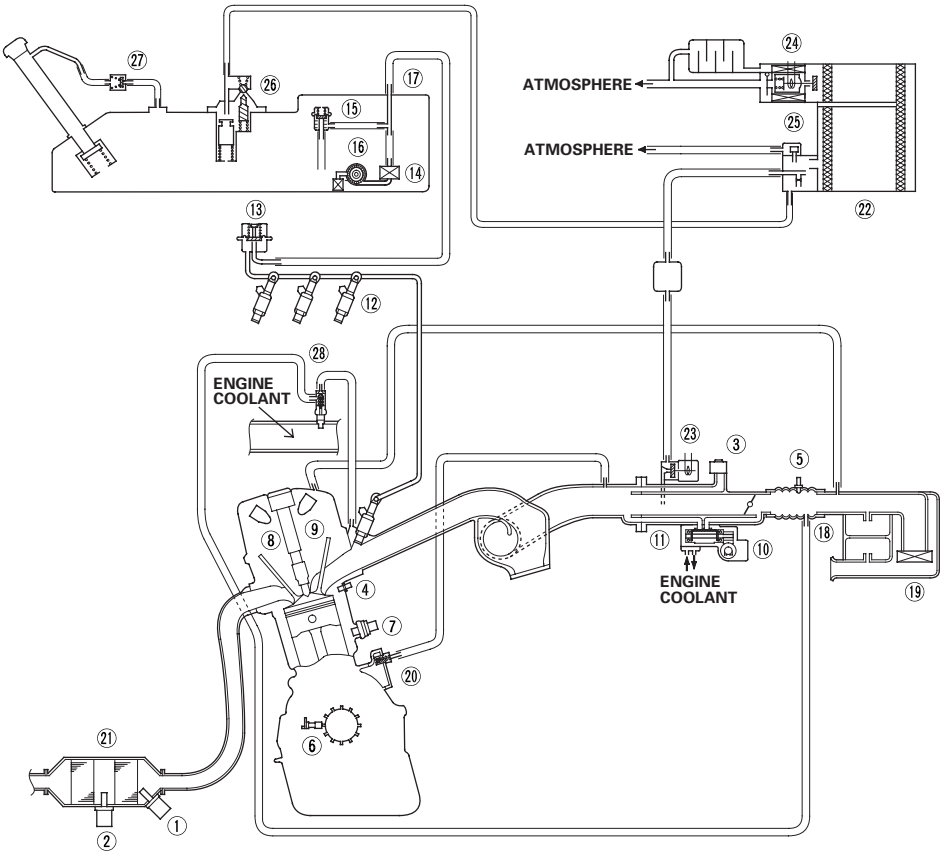

① AIR FUEL RATIO (A/F) SENSOR (SENSOR 1)
② SECONDARY HEATED OXYGEN SENSOR (SECONDARY HO2S) (SENSOR 2)
③ MANIFOLD ABSOLUTE PRESSURE (MAP) SENSOR
④ ENGINE COOLANT TEMPERATURE (ECT) SENSOR
⑤ INTAKE AIR TEMPERATURE (IAT) SENSOR
⑥ CRANKSHAFT POSITION (CKP) SENSOR
⑦ KNOCK SENSOR (KS)
⑧ CAMSHAFT POSITION (CMP) SENSOR A
⑨ CAMSHAFT POSITION (CMP) SENSOR B
⑩ IDLE AIR CONTROL (IAC) VALVE
⑪ THROTTLE BODY
⑫ INJECTOR
⑬ FUEL PULSATION DAMPER
⑭ FUEL FILTER
⑮ FUEL PRESSURE REGULATOR
⑯ FUEL PUMP
⑰ FUEL TANK
⑱ RESONATOR
⑲ AIR CLEANER
⑳ POSITIVE CRANKCASE VENTILATION (PCV) VALVE
㉑ THREE WAY CATALYTIC CONVERTER
㉒ EVAPORATIVE EMISSION (EVAP) CANISTER
㉓ EVAPORATIVE EMISSION (EVAP) CANISTER PURGE VALVE
㉔ EVAPORATIVE EMISSION (EVAP) CANISTER VENT SHUT VALVE
㉕ FUEL TANK PRESSURE (FTP) SENSOR
㉖ FUEL TANK VAPOR CONTROL VALVE
㉗ FUEL TANK VAPOR RECIRCULATION VALVE
㉘ INTAKE AIR BYPASS CONTROL THERMAL VALVE

(cont'd)

System Description (cont'd)

Vacuum Distribution

K20A3 engine—2005-2006 models

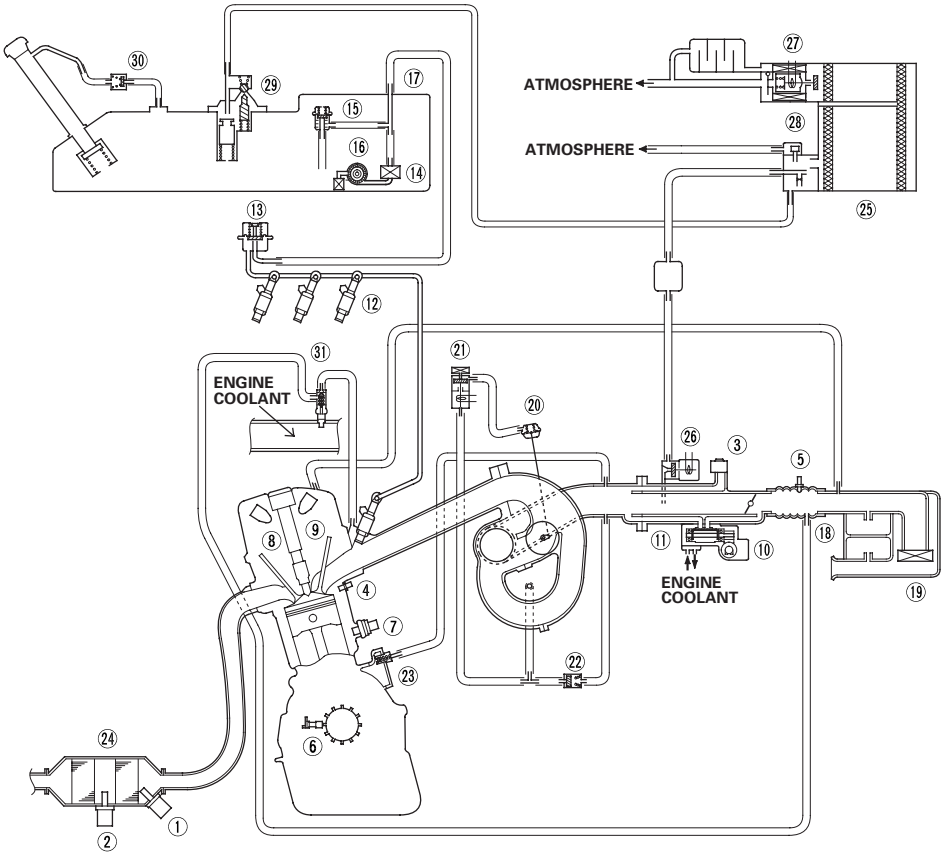

① AIR FUEL RATIO (A/F) SENSOR (SENSOR 1)
② SECONDARY HEATED OXYGEN SENSOR (SECONDARY HO2S) (SENSOR 2)
③ MANIFOLD ABSOLUTE PRESSURE (MAP) SENSOR
④ ENGINE COOLANT TEMPERATURE (ECT) SENSOR
⑤ INTAKE AIR TEMPERATURE (IAT) SENSOR
⑥ CRANKSHAFT POSITION (CKP) SENSOR
⑦ KNOCK SENSOR (KS)
⑧ CAMSHAFT POSITION (CMP) SENSOR A
⑨ CAMSHAFT POSITION (CMP) SENSOR B
⑩ IDLE AIR CONTROL (IAC) VALVE
⑪ THROTTLE BODY
⑫ INJECTOR
⑬ FUEL PULSATION DAMPER
⑭ FUEL FILTER
⑮ FUEL PRESSURE REGULATOR
⑯ FUEL PUMP
⑰ FUEL TANK
⑱ RESONATOR
⑲ AIR CLEANER
⑳ INTAKE MANIFOLD TUNING (IMT) (INTAKE MANIFOLD RUNNER CONTROL (IMRC)) ACTUATOR
㉑ INTAKE MANIFOLD TUNING (IMT) (INTAKE MANIFOLD RUNNER CONTROL (IMRC)) SOLENOID VALVE
㉒ INTAKE MANIFOLD TUNING (IMT) (INTAKE MANIFOLD RUNNER CONTROL (IMRC)) CHECK VALVE
㉓ POSITIVE CRANKCASE VENTILATION (PCV) VALVE
㉔ THREE WAY CATALYTIC CONVERTER
㉕ EVAPORATIVE EMISSION (EVAP) CANISTER
㉖ EVAPORATIVE EMISSION (EVAP) CANISTER PURGE VALVE
㉗ EVAPORATIVE EMISSION (EVAP) CANISTER VENT SHUT VALVE
㉘ FUEL TANK PRESSURE (FTP) SENSOR
㉙ FUEL TANK VAPOR CONTROL VALVE
㉚ FUEL TANK VAPOR RECIRCULATION VALVE
㉛ INTAKE AIR BYPASS CONTROL THERMAL VALVE

PGM-FI System

The Programmed Fuel Injection (PGM-FI) system is a sequential multiport fuel injection system.

Air Conditioning (A/C) Compressor Clutch Relay
When the ECM/PCM receives a demand for cooling from the A/C system, it delays the compressor from being energized, and enriches the mixture to assure smooth transition to the A/C mode.

Air Fuel Ratio (A/F) Sensor
The A/F Sensor operates over a wide air/fuel range. The A/F Sensor is installed upstream of the TWC, and sends signals to the ECM/PCM which varies the duration of fuel injection accordingly.

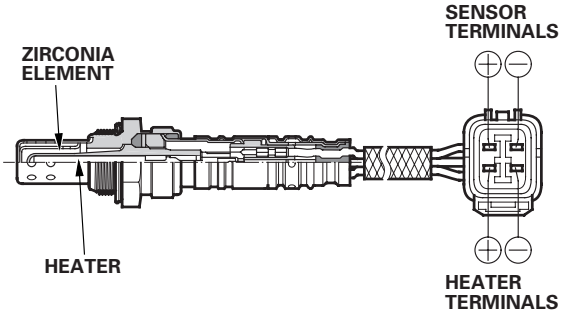

Barometric Pressure (BARO) Sensor
The BARO sensor is inside the ECM/PCM. It converts atmospheric pressure into a voltage signal that is used by the ECM/PCM to modify the basic duration of the fuel injection discharge.

Crankshaft Position (CKP) Sensor
The CKP sensor detects engine speed and is used by the ECM/PCM to determine ignition timing and timing for fuel injection of each cylinder as well as detecting engine misfire.

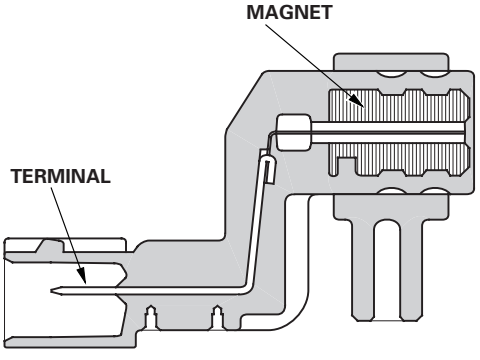

Engine Coolant Temperature (ECT) Sensor
The ECT sensor is a temperature dependent resistor (thermistor). The resistance of the thermistor decreases as the engine coolant temperature increases.

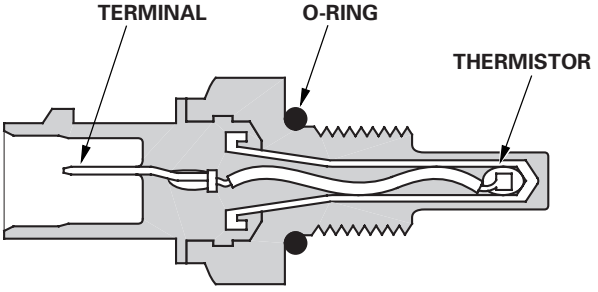

Ignition Timing Control
The ECM/PCM contains the memory for basic ignition timing at various engine speeds and manifold absolute pressures. It also adjusts the timing according to engine coolant temperature.

Injector Timing and Duration
The ECM/PCM contains the memory for basic discharge duration at various engine speeds and manifold pressures. The basic discharge duration, after being read out from the memory, is further modified by signals sent from various sensors to obtain the final discharge duration.
By monitoring long term fuel trim, the ECM/PCM detects long term malfunctions in the fuel system and sets a diagnostic trouble code (DTC).

Intake Air Temperature (IAT) Sensor
The IAT sensor is a temperature dependent resistor (thermistor). The resistance of the thermistor decreases as the intake air temperature increases.

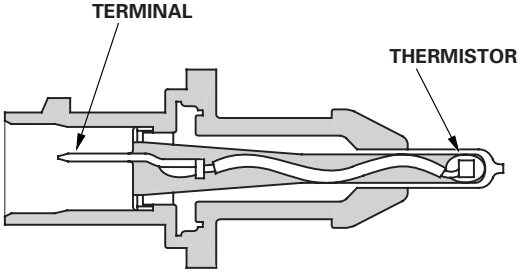

(cont'd)

System Description (cont'd)

Knock Sensor (KS)
The knock control system adjusts the ignition timing to minimize knock.

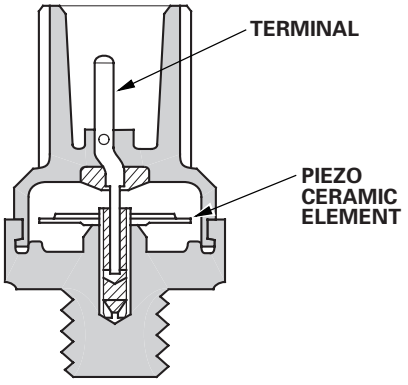

Malfunction Indicator Lamp (MIL) Indication (In relation to Readiness Codes)
The vehicle has certain ''readiness codes'' that are part of the on-board diagnostics for the emissions systems. If the vehicle's battery has been disconnected or gone dead, if the DTCs have been cleared, or if the ECM/PCM has been reset, these codes are reset. In some states, part of the emissions testing is to make sure these codes are complete. If all of them are not set to complete, the vehicle may fail the test, or the test cannot be finished.

To check if the readiness codes are set to complete, turn the ignition switch ON (II), but do not start the engine. The MIL will come on for 15—20 seconds. If it then goes off, the readiness codes are complete. If it flashes five times, one or more readiness codes are not complete. To set each code, drive the vehicle or run the engine as described in the procedures (see page 11-90).

Manifold Absolute Pressure (MAP) Sensor
The MAP sensor converts manifold absolute pressure into electrical signals to the ECM/PCM.

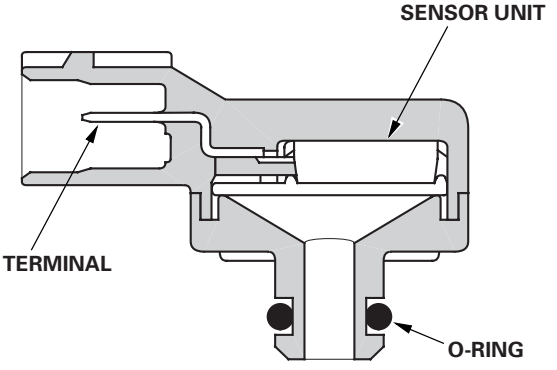

Secondary Heated Oxygen Sensor (Secondary HO2S)
The secondary HO2S detects the oxygen content in the exhaust gas downstream of the Three Way Catalytic Converter (TWC), and sends signals to the ECM/PCM which varies the duration of fuel injection accordingly. To stabilize its output, the sensor has an internal heater. The ECM/PCM compares the HO2S output with the A/F sensor output to determine catalyst efficiency. The secondary HO2S is located on the TWC.

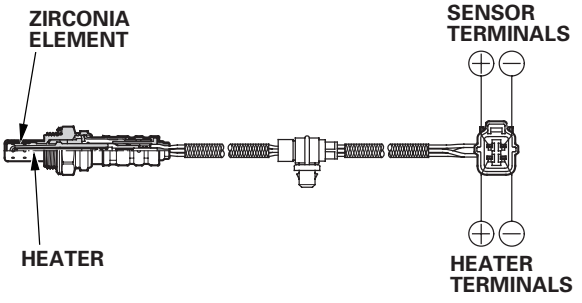

Starting Control
When the engine is started, the ECM/PCM provides a rich mixture by increasing injector duration.

Throttle Position (TP) Sensor
The TP sensor is a potentiometer connected to the throttle valve shaft. As the throttle position changes, the sensor varies the signal voltage to the ECM/PCM. The TP sensor is not replaceable apart from the throttle body.

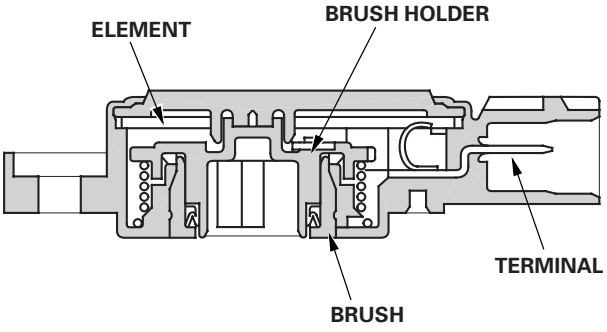

Camshaft Position (CMP) Sensor B
CMP sensor B detects the position of the No. 1 cylinder as a reference for sequential fuel injection to each cylinder.

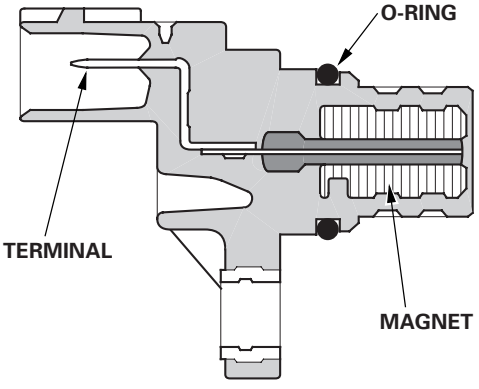

Vehicle Speed Sensor (VSS) (2002-2004 M/T models)
The VSS is driven by the differential. It generates a pulsed signal from an input of 5 volts. The number of pulses per minute increases/decreases with the speed of the vehicle.

Input Shaft (Mainshaft) Speed Sensor
This sensor detects mainshaft speed.

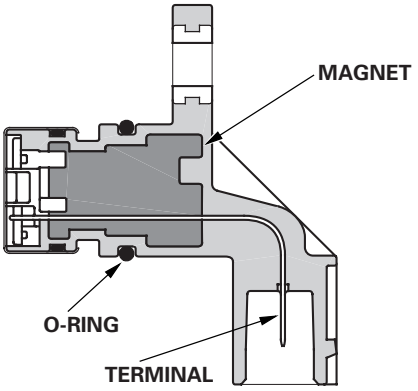

Output Shaft (Countershaft) Speed Sensor (2005-2006 M/T models)
This sensor detects output shaft (countershaft) speed.

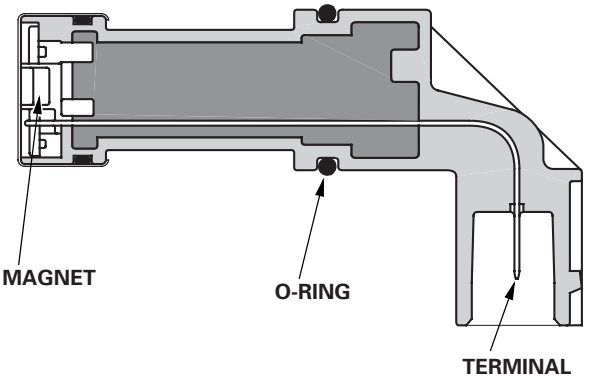

(cont'd)

System Description (cont'd)

VTEC/VTC

- The i-VTEC has a VTC (Variable Valve Timing Control) mechanism on the intake camshaft in addition to the usual VTEC.
  This mechanism improves fuel efficiency and reduces exhaust emissions at all levels of engine speed, vehicle speed, and engine load.
- The VTEC mechanism changes the valve lift and timing by using more than one cam profile.
- The VTC changes the phase of the intake camshaft via oil pressure. It changes the intake valve timing continuously.

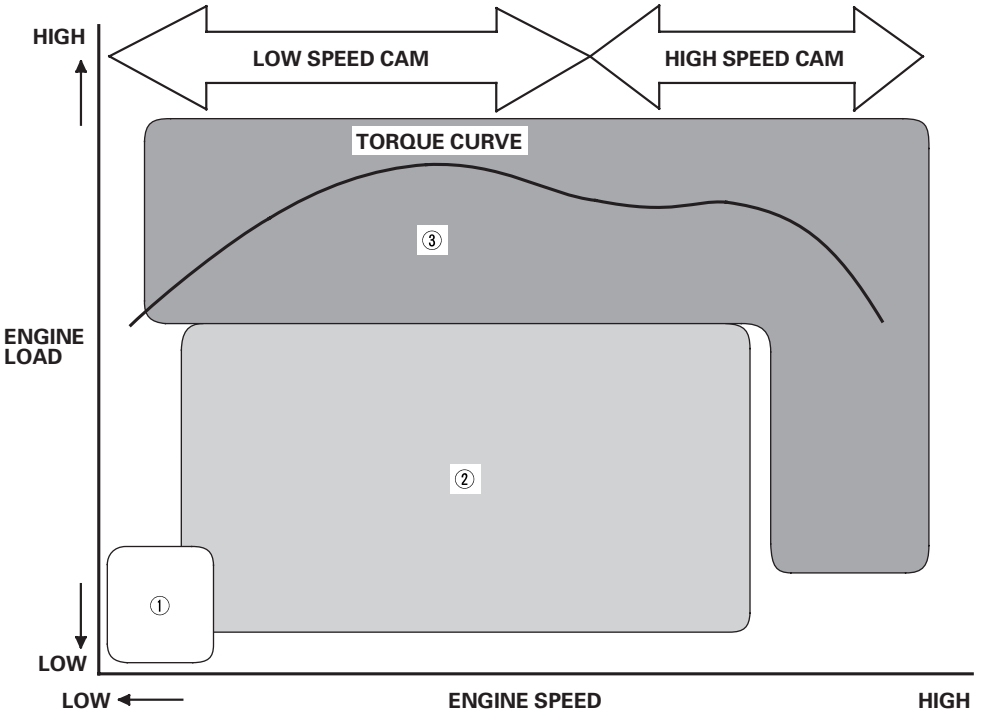

Driving Condition	VTC Control	Description
① At light-loaded running	Base Position	Cam angle is retarded to reduce the entry of exhaust gas into the intake port and to achieve stable fuel consumption during lean burn.
② At medium/high-loaded running	Advance Control	Cam angle is advanced for the EGR effect and to reduce the pumping loss. The intake valve is closed quickly. To help reduce the entry of air/fuel mixture into the intake port and improve the charging effect.
③ At high speed running	Advance-Base Position	Cam phase angle is controlled for optimum valve timing and maximum engine power.

VTC System

- The VTC system makes continuous intake valve timing changes corresponding to the operation conditions.
- It optimizes intake valve timing to allow the engine to produce maximum power.
- Cam angle is advanced to obtain the EGR effect and reduce the pumping loss. The intake valve is closed quickly to reduce the entry of the air/fuel mixture into the intake port and improve the charging effect.
- Reduces the cam advance at idle, stabilizes combustion, and reduces engine speed. If a malfunction occurs, VTC system control is disabled and the valve timing is fixed at the fully retarded position.

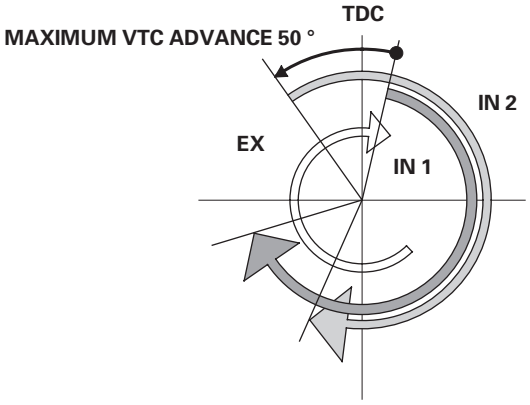

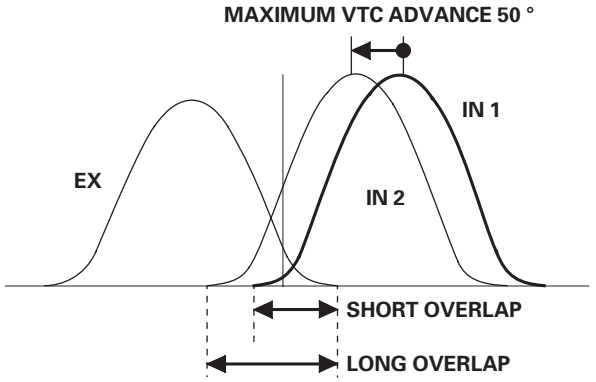

VTEC System

- The VTEC system changes the cam profile to correspond to the engine speed. It maximizes torque at low engine speeds and output at high engine speed.
- The low lift cam is used at low engine speeds, and the high lift cam is used at high engine speeds.
- The K20A2 and K20Z1 engines change both the intake and exhaust camshaft. Only the intake camshaft side has a VTEC mechanism on the K20A3 engine.

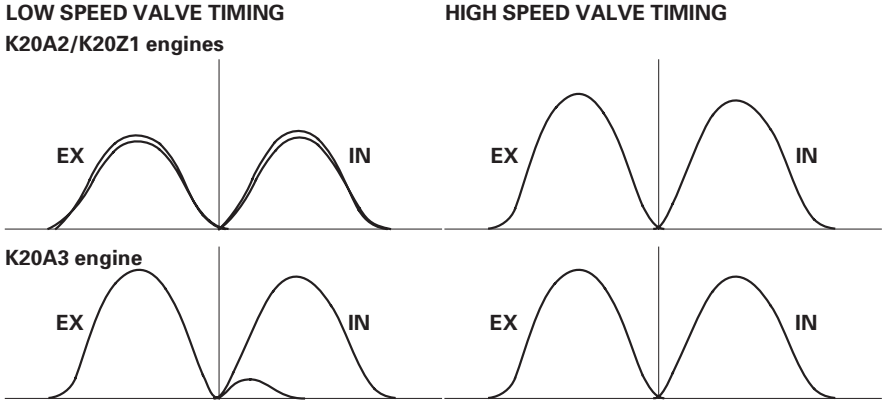

(cont'd)

System Description (cont'd)

VTEC/VTC

System Diagram

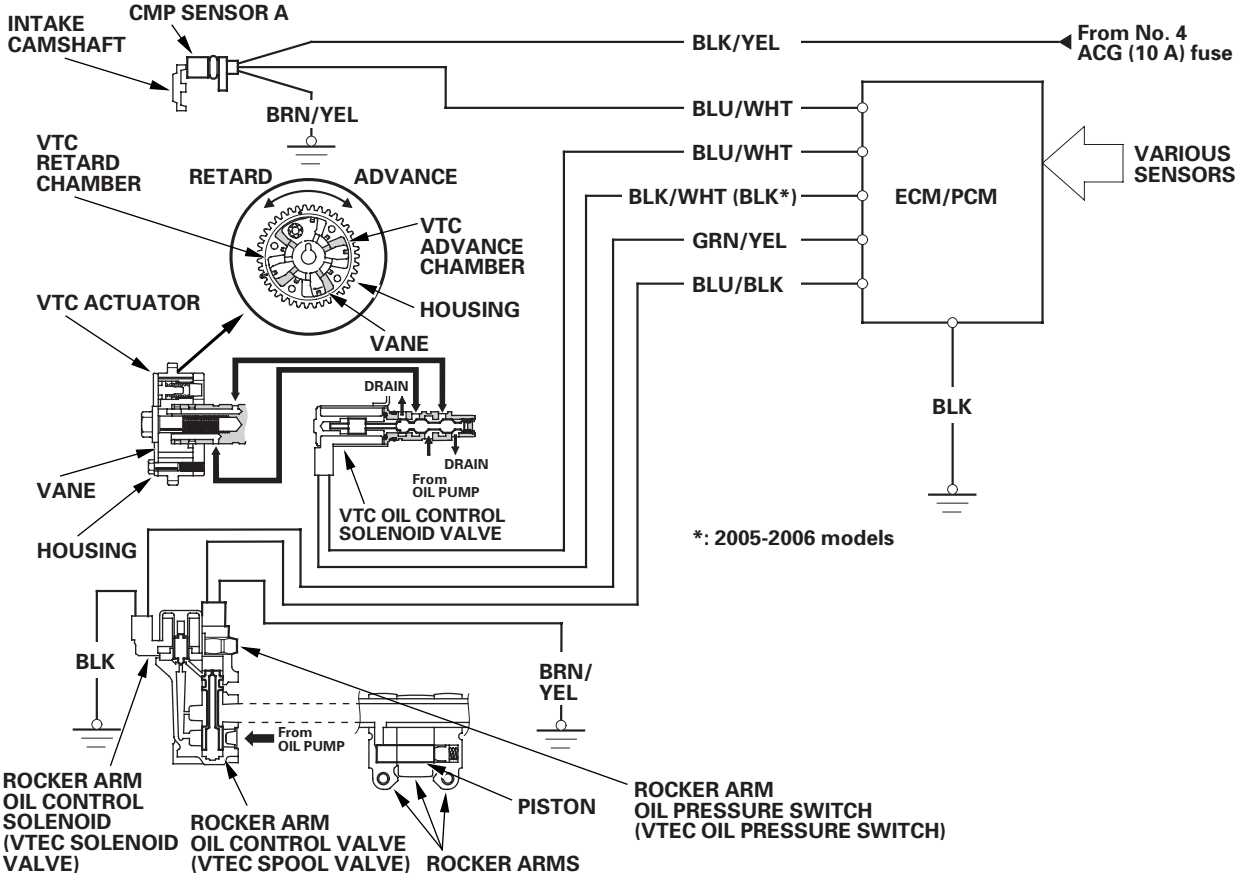

Camshaft Position (CMP) Sensor A

CMP sensor A detects camshaft angle position for VTC system.

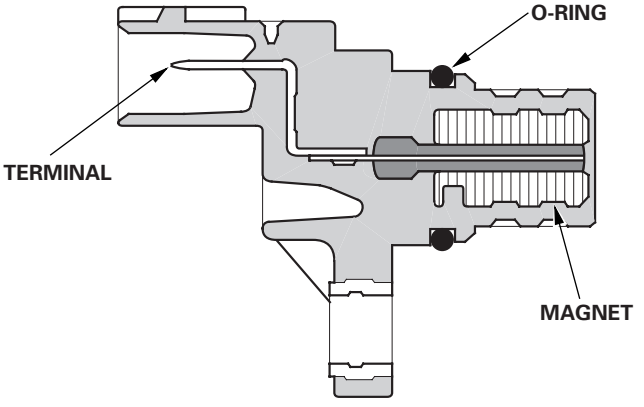

Idle Control System

When the engine is cold, the A/C compressor is on, the transmission is in gear, the brake pedal is pressed, the power steering load is high, or the alternator is charging, the ECM/PCM controls current to the Idle Air Control (IAC) valve to maintain the correct idle speed. Refer to the System Diagram to see the functional layout of the system.

Brake Pedal Position Switch
The brake pedal position switch signals the ECM/PCM when the brake pedal is pressed.

Idle Air Control (IAC) Valve
To maintain the proper idle speed, the IAC valve changes the amount of air bypassing the throttle body in response to an electrical signal from the ECM/PCM.

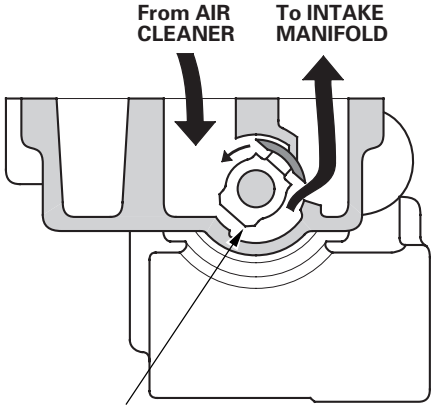

Power Steering Pressure (PSP) Switch
The PSP switch signals the ECM/PCM when the power steering load is high.

Fuel Supply System

Fuel Cut-off Control—2002-2004 Models
During deceleration with the throttle valve closed, current to the injectors is cut off to improve fuel economy at speeds over 930 rpm (1,100 rpm)*1. Fuel cut-off action also occurs when engine speed exceeds 6,900 rpm (8,100 rpm)*1, regardless of the position of the throttle valve, to protect the engine from over-revving. When the vehicle is stopped, the ECM/PCM cuts the fuel at engine speeds over 5,500 rpm.
* 1: K20A2 engine

Fuel Cut-off Control—2005-2006 Models
During deceleration with the throttle valve closed, current to the injectors is cut off to improve fuel economy at speeds over 980 rpm (1,150 rpm)*2. Fuel cut-off action also occurs when engine speed exceeds 6,500 rpm (7,800 rpm)*2, regardless of the position of the throttle valve, to protect the engine from over-revving. When the vehicle is stopped, the ECM/PCM cuts the fuel at engine speeds over 3,500 rpm.
* 2: K20Z1 engine

Fuel Pump Control
When the ignition is turned on, the ECM/PCM grounds the PGM-FI main relay which feeds current to the fuel pump for 2 seconds to pressurize the fuel system. With the engine running, the ECM/PCM grounds the PGM-FI main relay and feeds current to the fuel pump. When the engine is not running and the ignition is on, the ECM/PCM cuts ground to the PGM-FI main relay which cuts current to the fuel pump.

PGM-FI Main Relay 1 and 2
The PGM-FI relay consists of two separate relays. PGM-FI main relay 1 (FI MAIN) is energized whenever the ignition switch is ON (II) to supply battery voltage to the ECM/PCM, power to the injectors, and power for PGM-FI main relay 2 (FUEL PUMP). PGM-FI main relay 2 (FUEL PUMP) is energized to supply power to the fuel pump for 2 seconds when the ignition switch is turned ON (II), and when the engine is running.

(cont'd)

System Description (cont'd)

Intake Air System

Refer to the System Diagram to see the functional layout of the system.

Intake Air Bypass Control Thermal Valve
When the engine is running during warm up, the intake air bypass control thermal valve sends air to the injector.

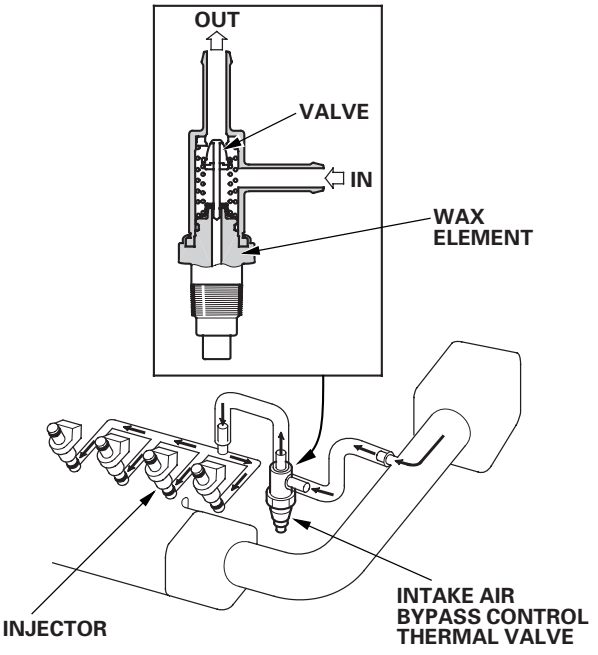

Intake Manifold Tuning (IMT) (Intake Manifold Runner Control (IMRC)) Valve Position Sensor (K20A3 engine)
The IMT (IMRC) position sensor is a potentiometer connected to the IMT (IMRC) valve shaft. As the IMT (IMRC) valve position changes, the sensor varies the signal voltage to the ECM/PCM.

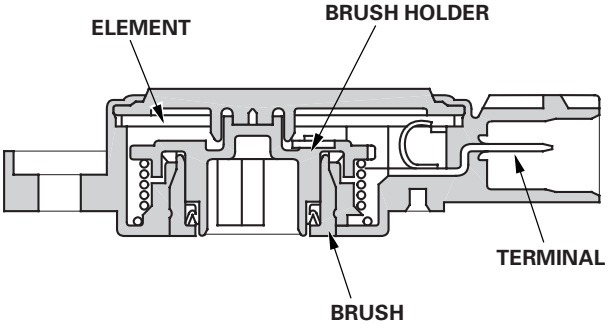

Throttle Body
The throttle body is a single-barrel side draft type. The lower portion of the IAC valve is heated by engine coolant from the cylinder head.

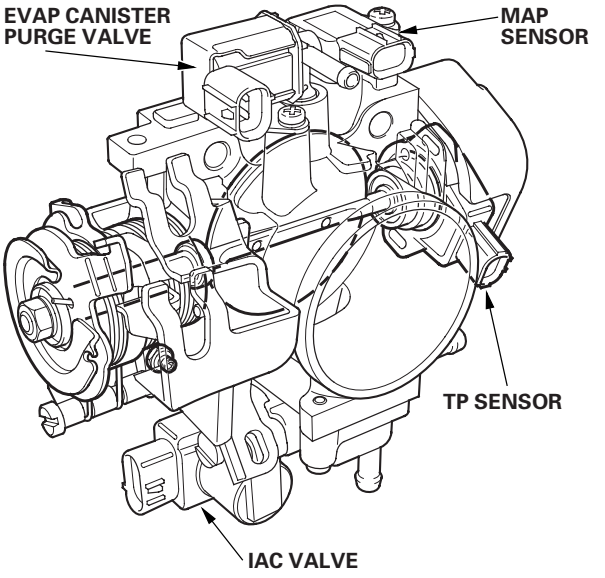

Catalytic Converter System

Three Way Catalytic Converter (TWC)
The TWC converts hydrocarbons (HC), carbon monoxide (CO), and oxides of nitrogen (NOx) in the exhaust gas to carbon dioxide (CO_2), dinitrogen (N_2), and water vapor.

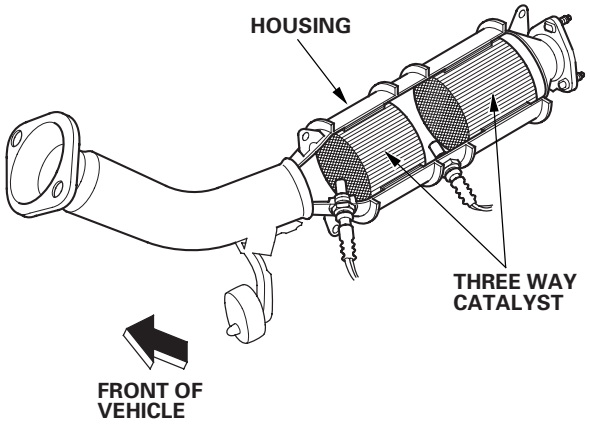

Positive Crankcase Ventilation (PCV) System

The PCV valve prevents blow-by gasses from escaping into the atmosphere by venting them into the intake manifold.

K20A2/K20Z1 engines

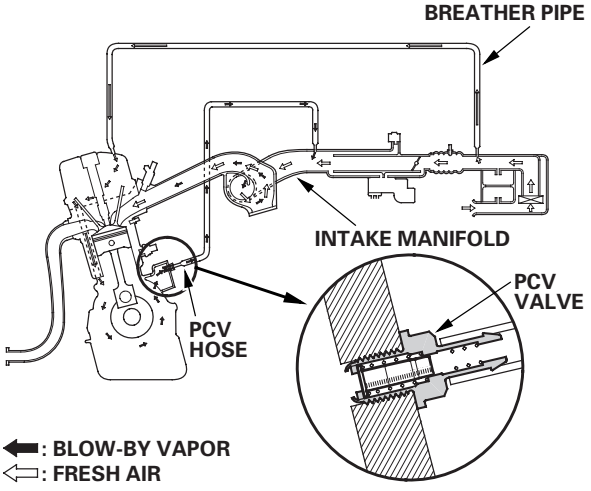

K20A3 engine

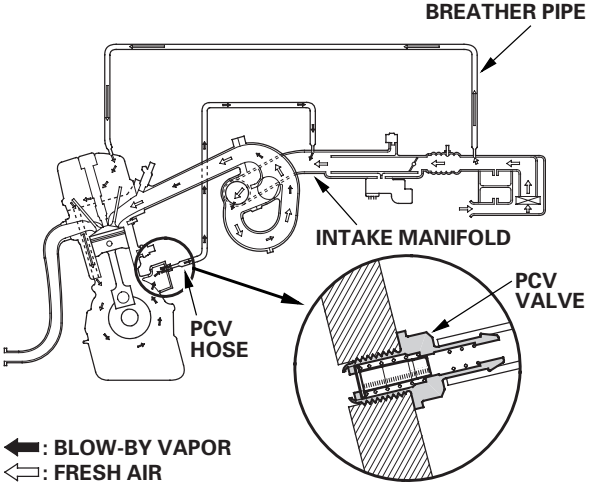

(cont'd)

System Description (cont'd)

Evaporative Emission (EVAP) Control System

Refer to the System Diagram to see the functional layout of the system.

EVAP Canister
The EVAP canister temporarily stores fuel vapor from the fuel tank until it can be purged back into the engine and burned (refer to the System Diagram to see the functional layout of the system).

EVAP Canister Purge Valve—2002-2004 Models
When the engine coolant temperature is below 149 ℉ (65 ℃), the ECM/PCM turns off the EVAP canister purge valve which cuts vacuum to the EVAP canister.

EVAP Canister Purge Valve—2005-2006 Models
When the engine coolant temperature is below 140 ℉ (60 ℃), the ECM/PCM turns off the EVAP canister purge valve which cuts vacuum to the EVAP canister.

Fuel Tank Pressure (FTP) Sensor
The FTP sensor converts fuel tank absolute pressure into an electrical input to the ECM/PCM.

2002-2004 models

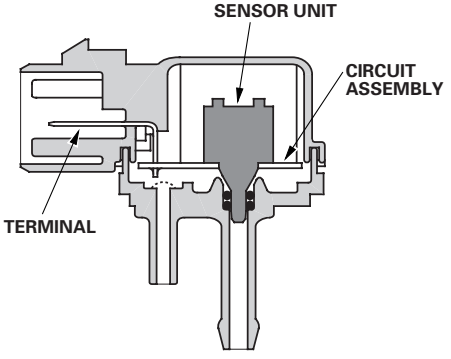

2005-2006 models

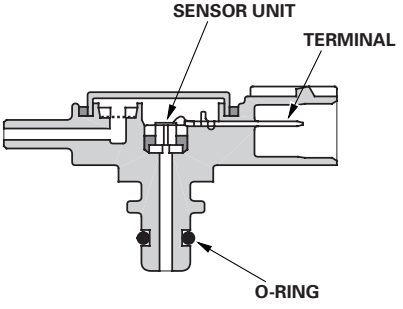

EVAP Two Way Valve and EVAP Bypass Solenoid Valve (2002-2004 Models)
The EVAP two way valve is installed between the fuel tank and the EVAP canister.
The EVAP two way valve sends fuel vapor into the EVAP canister corresponding to the pressure inside the fuel tank and relieves excess vacuum by drawing fresh air in through the canister.
The EVAP bypass solenoid valve opens to bypass the two way valve when doing at the EVAP leak check.

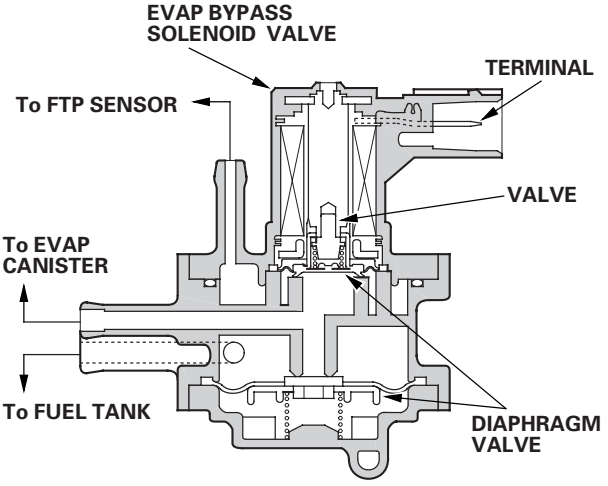

EVAP Canister Vent Shut Valve
The EVAP canister vent shut valve is on the EVAP canister.
The EVAP canister vent shut valve control the venting of the EVAP canister.

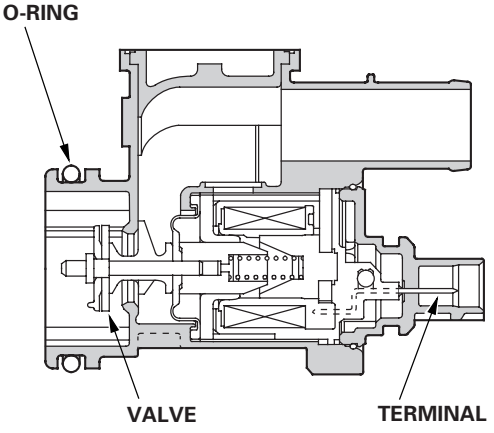

*: This illustration shows 2005-2006 models.

Fuel Cap Warning Message (2005-2006 Models)

The ECM/PCM detects whether the fuel fill cap is loose or missing under certain conditions and alerts the driver by showing the information in the odometer/trip meter display. If the ECM/PCM detects a small volume leak, the MIL may come on during the second drive cycle and store a DTC.

First drive cycle
During the first drive cycle after a cold start, the ECM/PCM alerts the driver to check the fuel fill cap by showing a ''CHECK FUEL CAP'' message in the odometer/trip meter display (A), and it stores Temporary DTC P0457 ''Evaporative Emission (EVAP) System Leak Detected/Fuel Cap Loose or Missing''. Tightening the fuel cap does not make the message go off immediately.

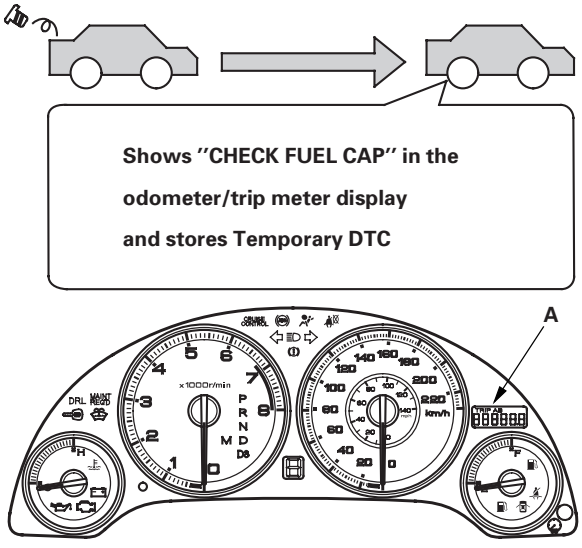

To make the message go off
Tighten the fuel fill cap properly, and do this procedure several times.

1. Turn the ignition switch OFF.

2. Start the engine, and drive at a steady speed over 28 mph (45 km/h), without moving the accelerator pedal, for about 1 minute.

Second drive cycle
During the second drive cycle after a cold start, if the fuel fill cap is still loose or missing, the ECM/PCM alerts the driver to check the fuel fill cap by showing a ''CHECK FUEL CAP'' message in the odometer/trip meter display as same as the first drive cycle. Tightening the fuel cap does not make the message go off immediately.

Third drive cycle
During the third drive cycle after a cold start, if the fuel fill cap is still loose or missing, the ECM/PCM stores DTC P0457 ''Evaporative Emission (EVAP) System Leak Detected/Fuel Cap Loose or Missing''. The malfunction indicator lamp (MIL) (A) comes on, and the ''CHECK FUEL CAP'' message goes off.

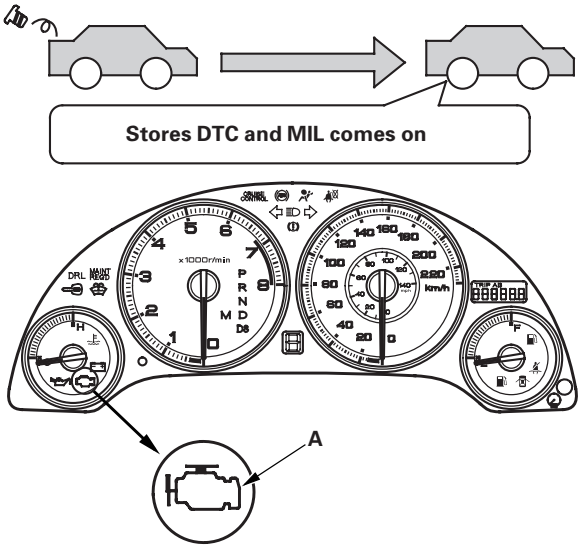

(cont'd)

System Description (cont'd)

Idle Control System Diagram

The idle speed of the engine is controlled by the Idle Air Control (IAC) valve:

- After the engine starts, the IAC valve opens for a certain amount of time. The amount of air is increased to raise the idle speed.
- When the engine coolant temperature is low, the IAC valve is opened to obtain the proper fast idle speed. The amount of bypassed air is controlled in relation to engine coolant temperature.

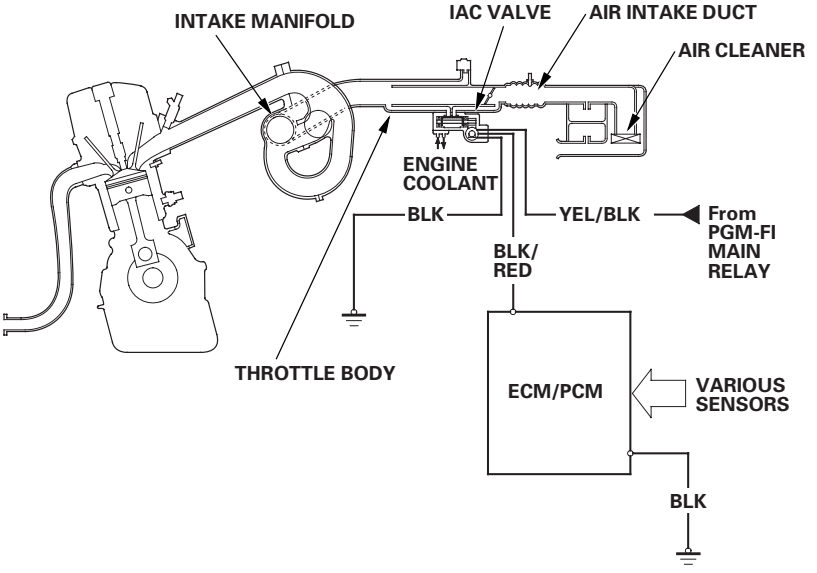

Intake Air System Diagram

This system supplies air for engine needs. A resonator in the intake air pipe provides additional silencing as air is drawn into the engine.

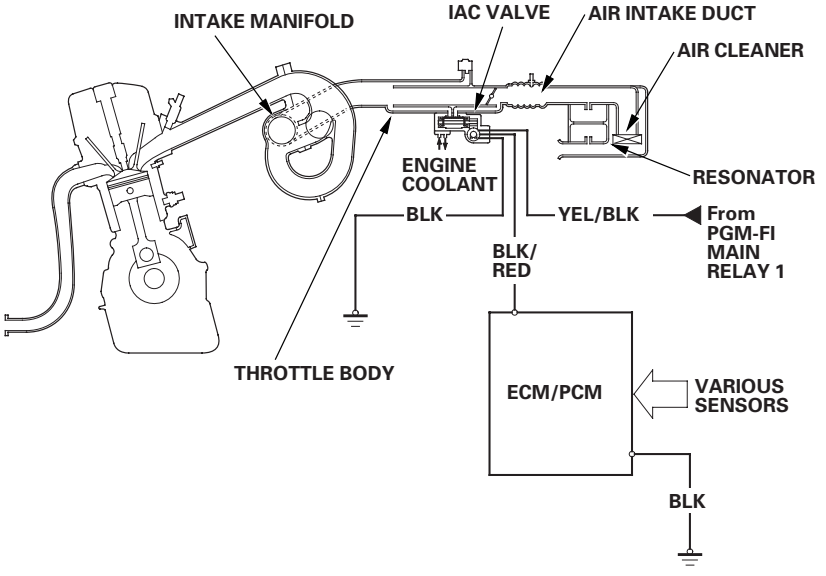

Intake Manifold Tuning (IMT) (Intake Manifold Runner Control (IMRC)) System (K20A3 engine)

Engine power is achieved by closing and opening the intake manifold tuning (IMT) (intake manifold runner control (IMRC)) valve. When the valve is closed, there is high torque at low engine speed. When the valve is open, there is high torque at high engine speed.

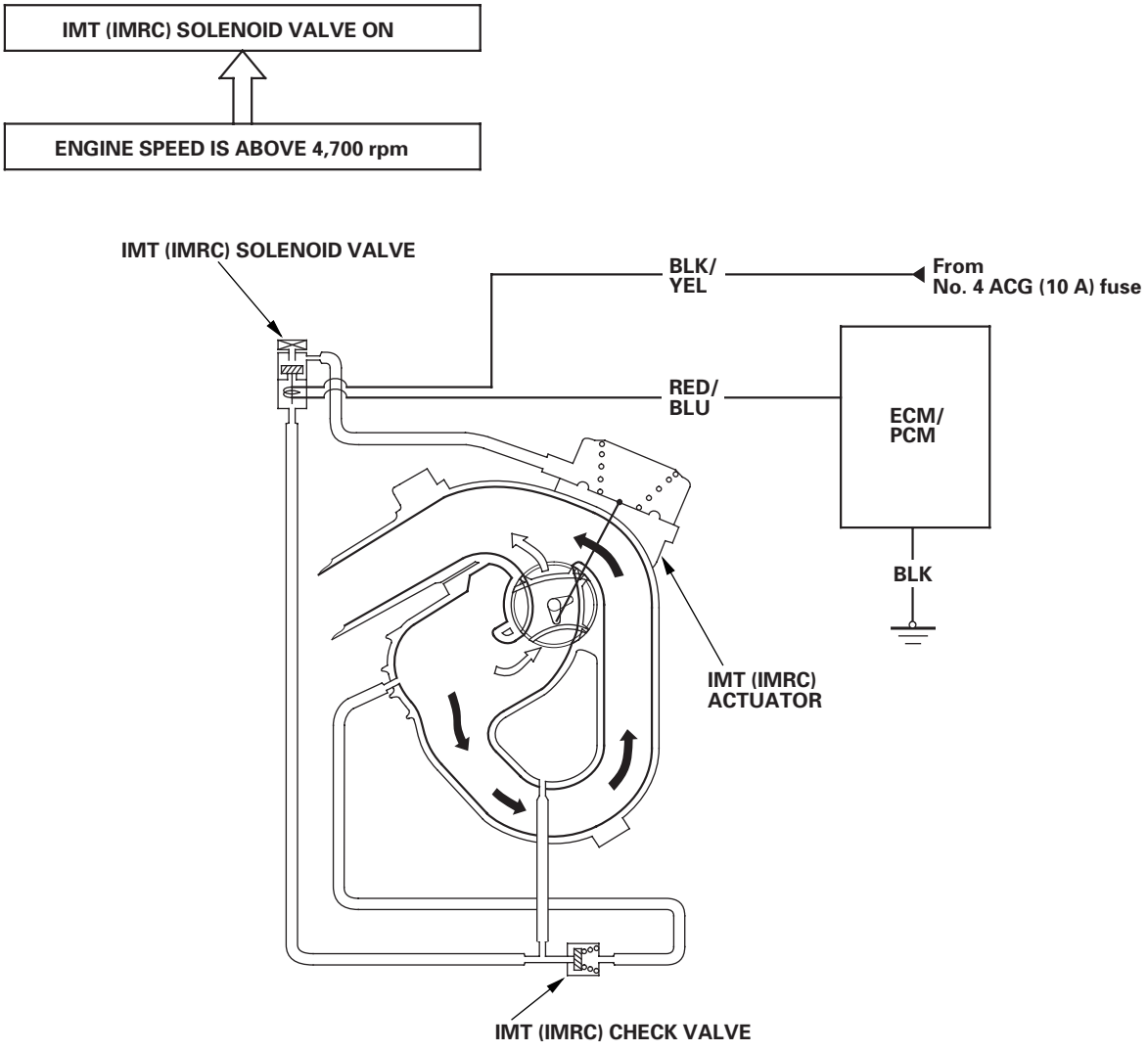

(cont'd)

System Description (cont'd)

Evaporative Emission (EVAP) Control Diagram—2002-2004 Models

The EVAP controls minimize the amount of fuel vapor escaping to the atmosphere. Vapor from the fuel tank is temporarily stored in the EVAP canister until it can be purged from the canister into the engine and burned.

- The EVAP canister is purged by drawing fresh air through it and into a port on the intake manifold. The purging vacuum is controlled by the EVAP canister purge valve, which operates whenever engine coolant temperature is above 149 °F (65 °C).
- When vapor pressure in the fuel tank is higher than the set value of the EVAP two way valve, the valve opens and regulates the flow of fuel vapor to the EVAP canister.
- During refueling, the fuel tank vapor control valve opens with the pressure in the fuel tank, and feeds the fuel vapor to the EVAP canister.

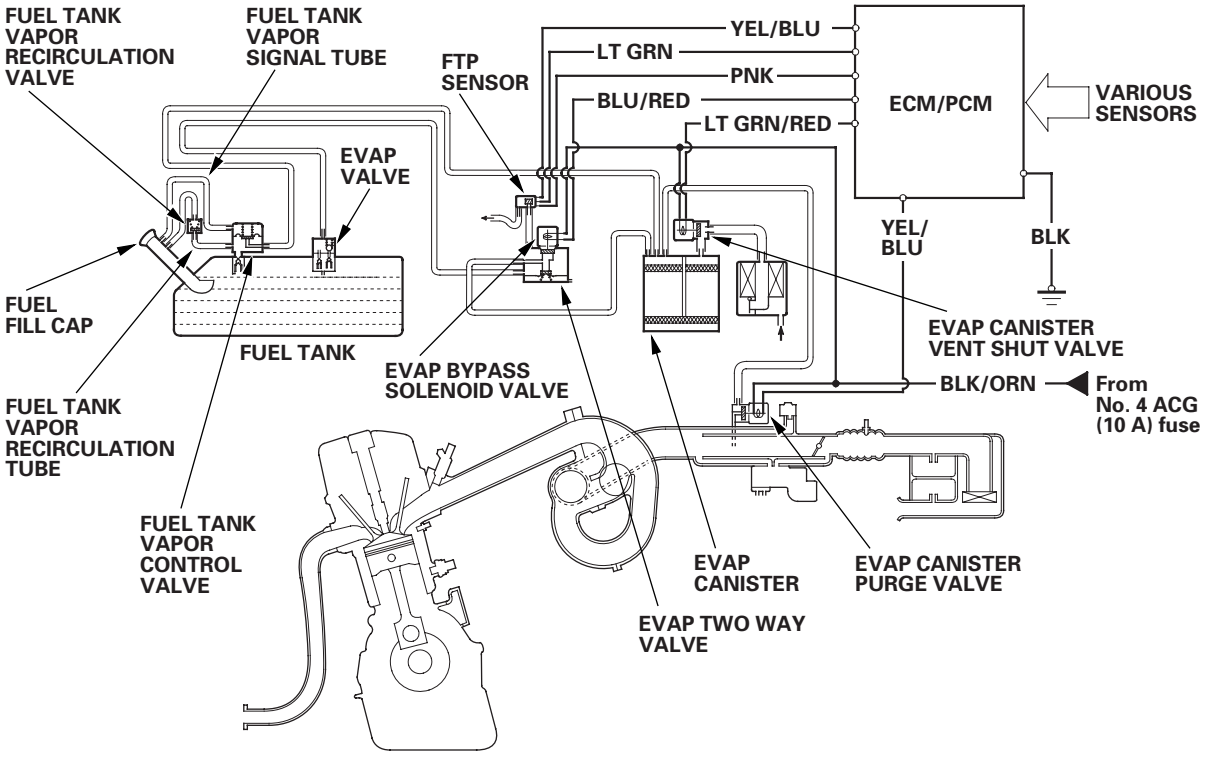

Evaporative Emission (EVAP) Control Diagram—2005-2006 Models

The EVAP controls minimize the amount of fuel vapor escaping to the atmosphere. Vapor from the fuel tank is temporarily stored in the EVAP canister until it can be purged from the canister into the engine and burned.

The EVAP canister is purged by drawing fresh air through it and into a port on the intake manifold.
The purging vacuum is controlled by the EVAP canister purge valve, which operates whenever engine coolant temperature is above 140 ℉ (60 ℃).

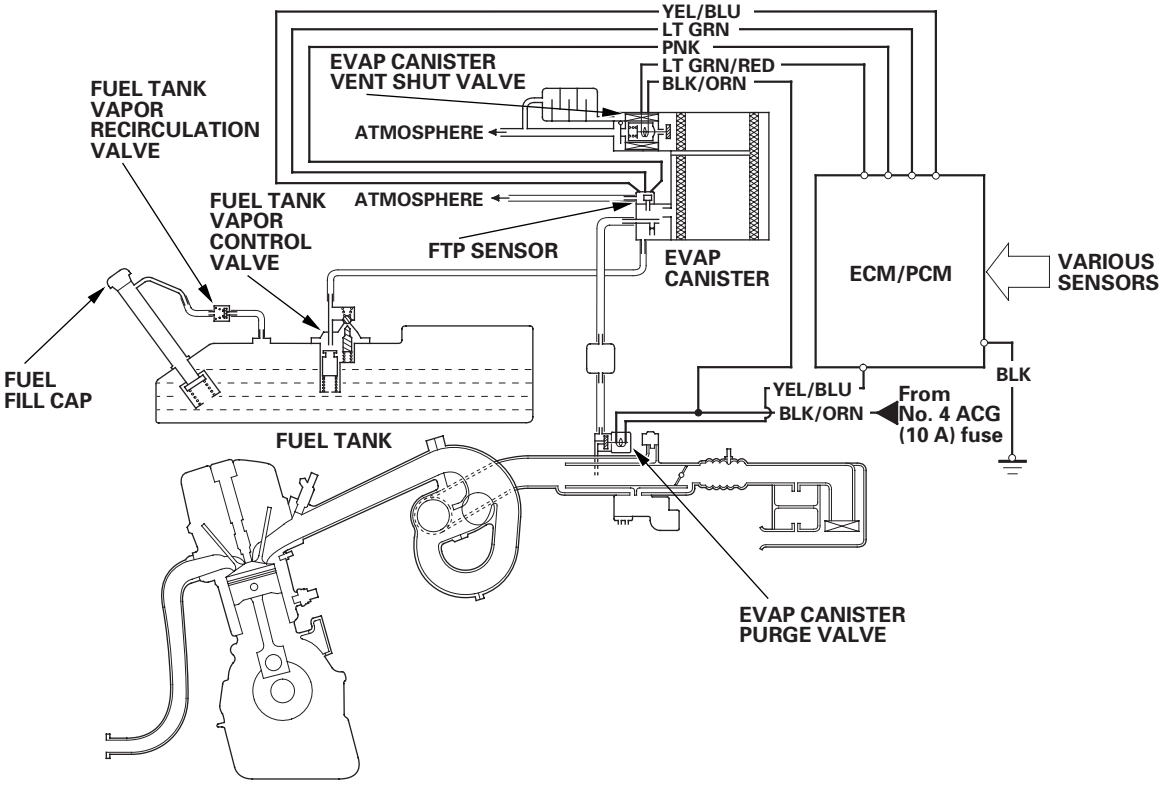

(cont'd)

System Description (cont'd)

ECM/PCM Circuit Diagram—2002-2004 Models

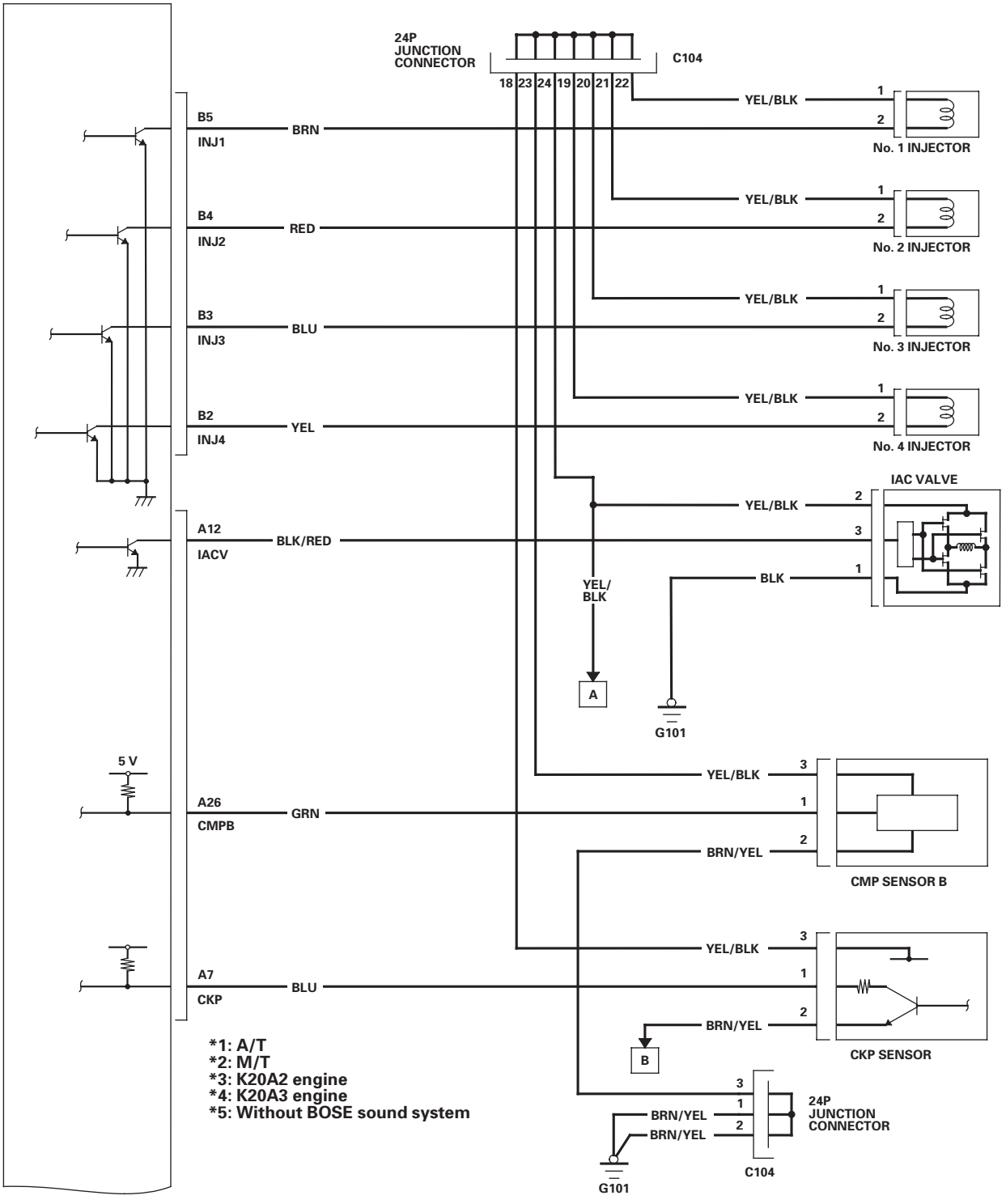

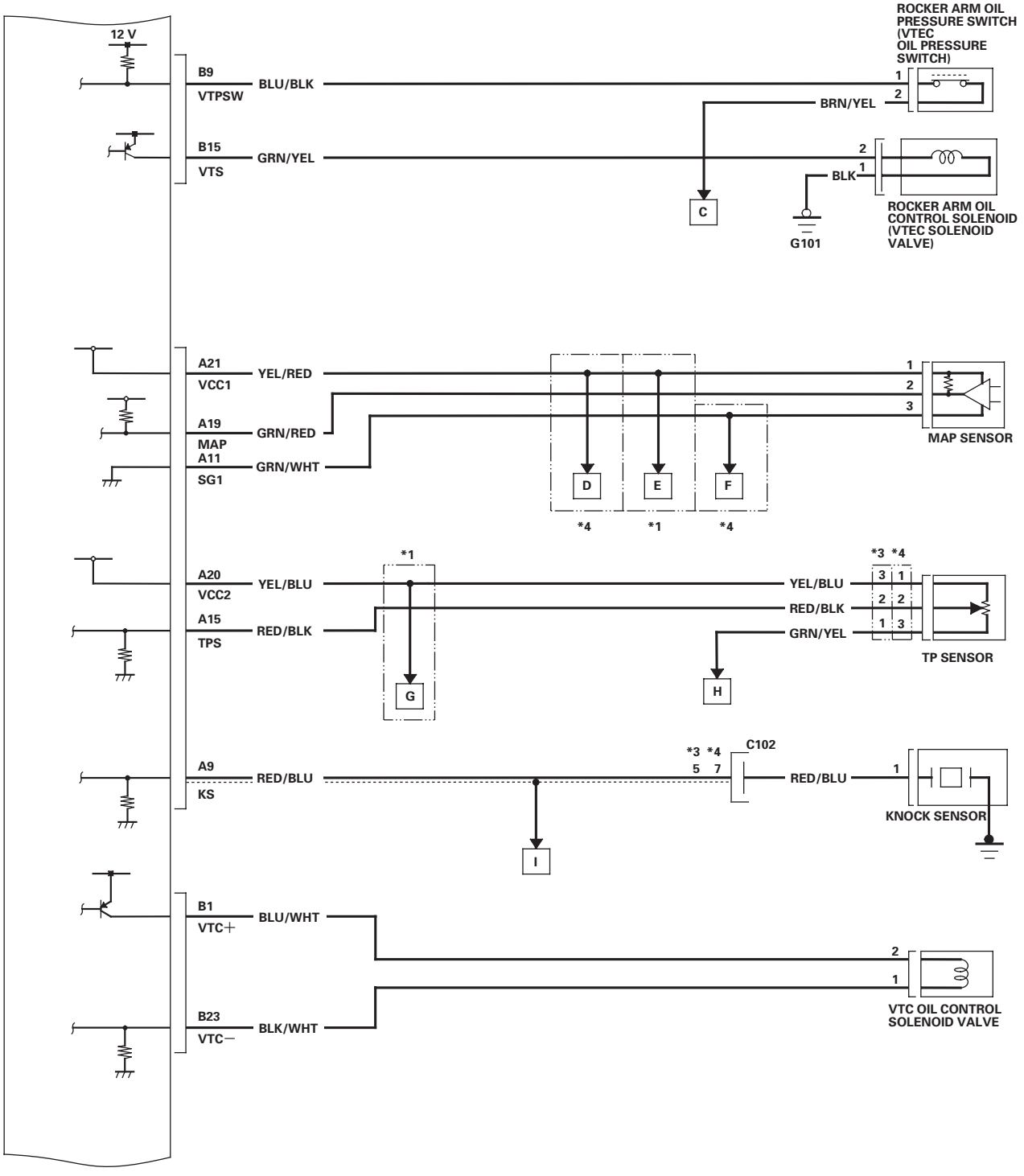
12 V
B9
VTPSW
BLU/BLK
ROCKER ARM OIL PRESSURE SWITCH (VTEC OIL PRESSURE SWITCH)
1
2
BRN/YEL
B15
VTS
GRN/YEL
2
1
BLK
C
G101
ROCKER ARM OIL CONTROL SOLENOID (VTEC SOLENOID VALVE)
A21
VCC1
YEL/RED
A19
MAP
GRN/RED
A11
SG1
GRN/WHT
1
2
3
MAP SENSOR
D
E
F
*4
*1
*4
A20
VCC2
YEL/BLU
A15
TPS
RED/BLK
*1
G
YEL/BLU
RED/BLK
GRN/YEL
*3 *4
3 1
2 2
1 3
TP SENSOR
H
A9
KS
RED/BLU
*3 *4
5 7
C102
RED/BLU
1
KNOCK SENSOR
I
B1
VTC+
BLU/WHT
B23
VTC−
BLK/WHT
2
1
VTC OIL CONTROL SOLENOID VALVE

(cont'd)

System Description (cont'd)

ECM/PCM Circuit Diagram—2002-2004 Models (cont'd)

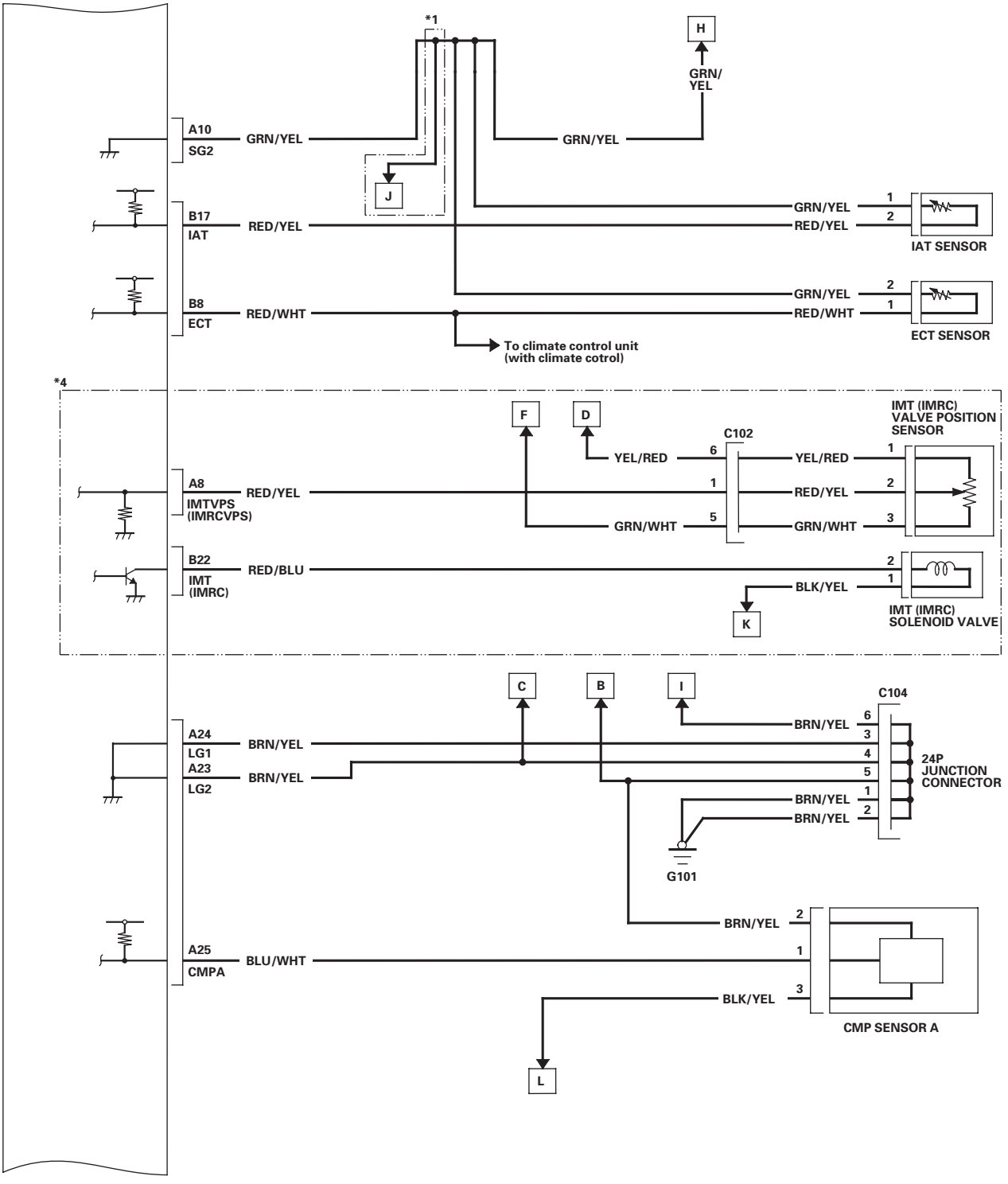

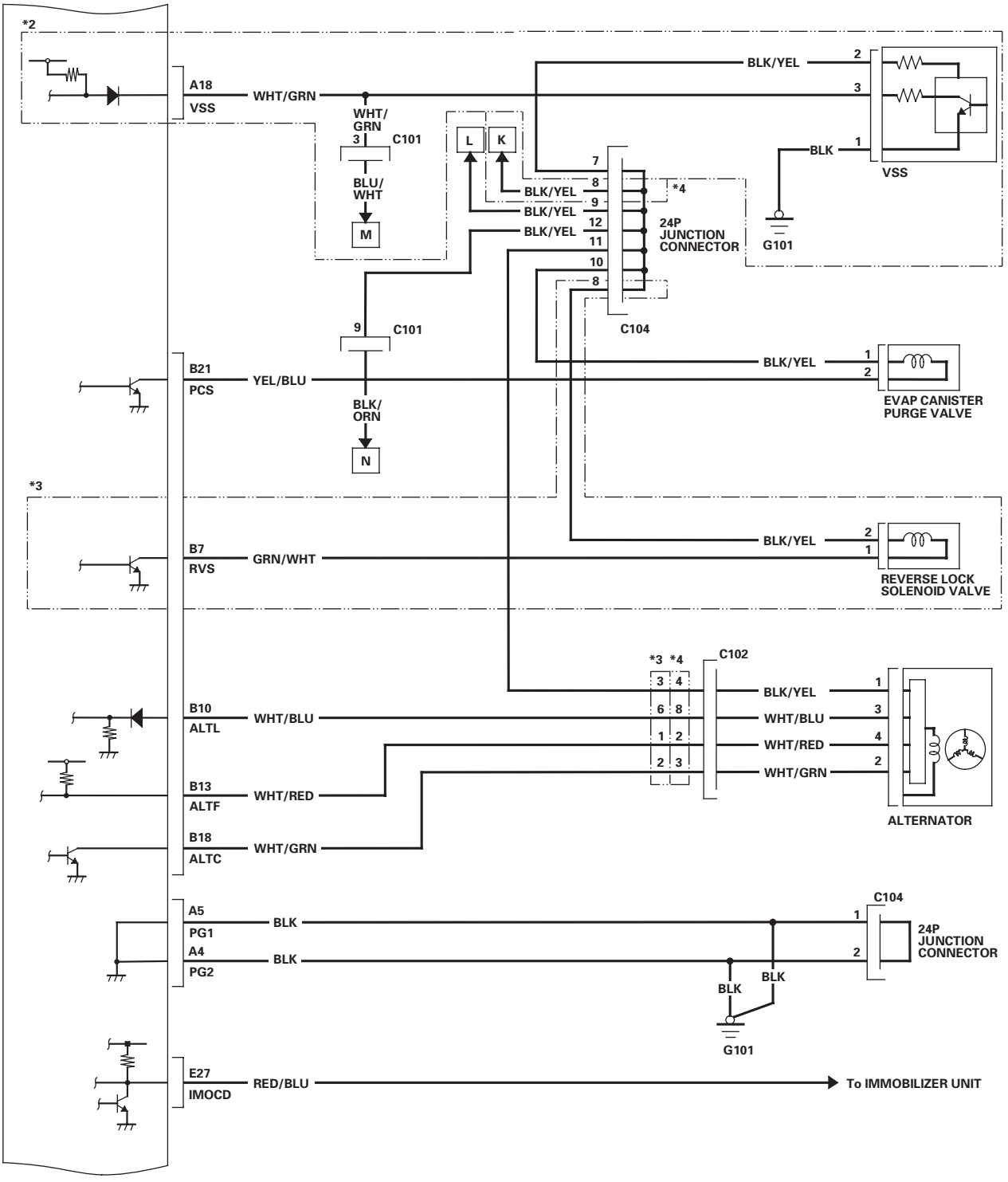
*2
A18
VSS
WHT/GRN
WHT/
GRN
3
C101
BLU/
WHT
M
L
K
BLK/YEL
BLK/YEL
BLK/YEL
BLK/YEL
7
8
9
12
11
10
8
*4
24P
JUNCTION
CONNECTOR
C104
BLK/YEL
2
3
1
BLK
VSS
G101
9
C101
BLK/
ORN
N
B21
PCS
YEL/BLU
BLK/YEL
1
2
EVAP CANISTER
PURGE VALVE
*3
B7
RVS
GRN/WHT
BLK/YEL
2
1
REVERSE LOCK
SOLENOID VALVE
*3 *4
C102
3 4
6 8
1 2
2 3
BLK/YEL
WHT/BLU
WHT/RED
WHT/GRN
1
3
4
2
ALTERNATOR
B10
ALTL
WHT/BLU
B13
ALTF
WHT/RED
B18
ALTC
WHT/GRN
A5
PG1
BLK
A4
PG2
BLK
C104
1
2
24P
JUNCTION
CONNECTOR
BLK
BLK
G101
E27
IMOCD
RED/BLU
To IMMOBILIZER UNIT

(cont'd)

System Description (cont'd)

ECM/PCM Circuit Diagram—2002-2004 Models (cont'd)

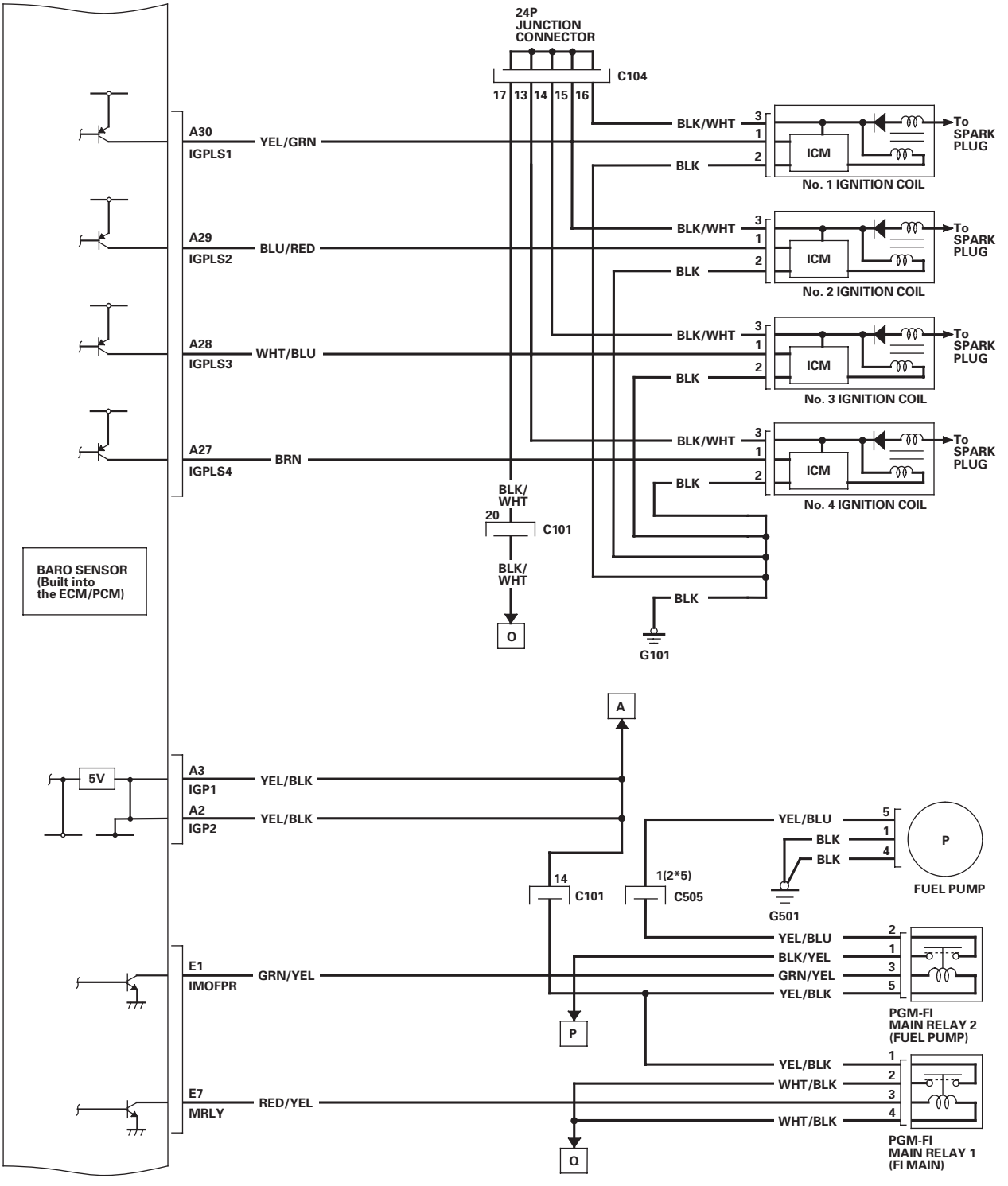

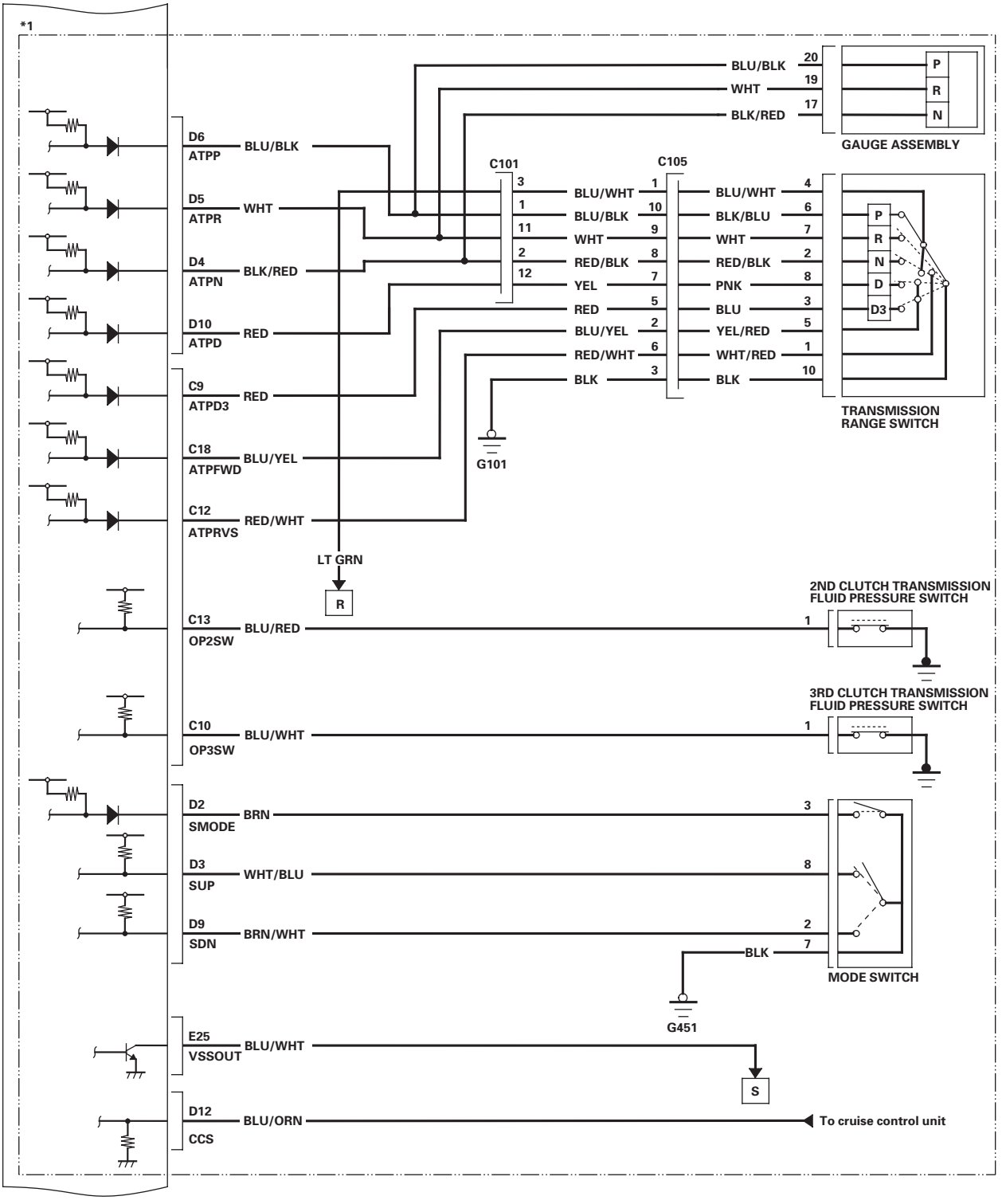
*1
D6
ATPP
BLU/BLK
D5
ATPR
WHT
D4
ATPN
BLK/RED
D10
ATPD
RED
C9
ATPD3
RED
C18
ATPFWD
BLU/YEL
C12
ATPRVS
RED/WHT
LT GRN
R
C13
OP2SW
BLU/RED
C10
OP3SW
BLU/WHT
D2
SMODE
BRN
D3
SUP
WHT/BLU
D9
SDN
BRN/WHT
E25
VSSOUT
BLU/WHT
S
D12
CCS
BLU/ORN
To cruise control unit
C101
3
1
11
2
12
BLU/WHT
BLU/BLK
WHT
RED/BLK
YEL
RED
BLU/YEL
RED/WHT
BLK
G101
C105
1
10
9
8
7
5
2
6
3
BLU/WHT
BLK/BLU
WHT
RED/BLK
PNK
BLU
YEL/RED
WHT/RED
BLK
4
6
7
2
8
3
5
1
10
BLU/BLK
WHT
BLK/RED
20
19
17
P
R
N
GAUGE ASSEMBLY
P
R
N
D
D3
TRANSMISSION
RANGE SWITCH
2ND CLUTCH TRANSMISSION
FLUID PRESSURE SWITCH
1
3RD CLUTCH TRANSMISSION
FLUID PRESSURE SWITCH
1
3
8
2
7
BLK
MODE SWITCH
G451

(cont'd)

System Description (cont'd)

ECM/PCM Circuit Diagram—2002-2004 Models (cont'd)

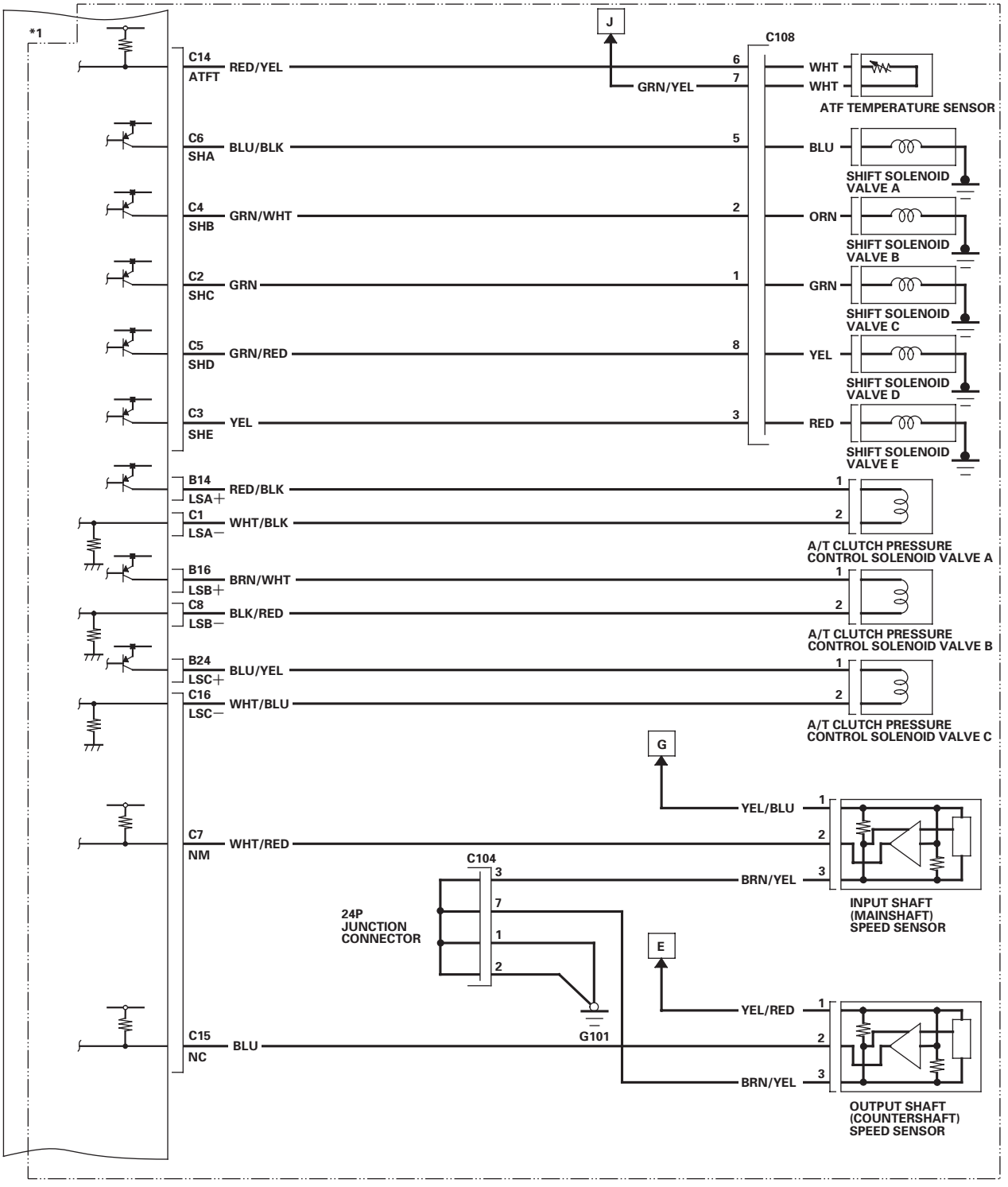

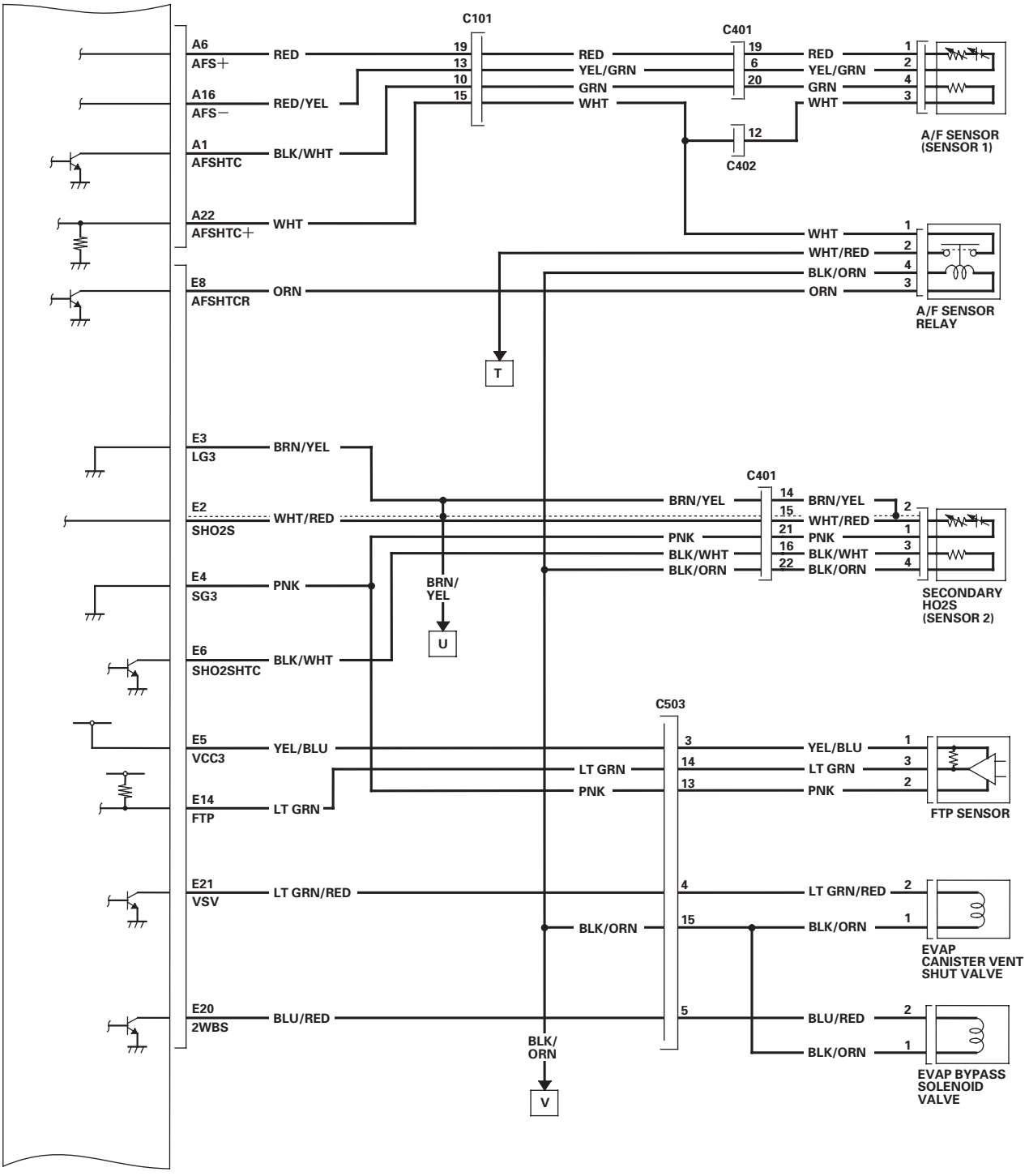
C101
C401
C402
A6
AFS+
RED
A16
AFS−
RED/YEL
A1
AFSHTC
BLK/WHT
A22
AFSHTC+
WHT
E8
AFSHTCR
ORN
19
13
10
15
RED
YEL/GRN
GRN
WHT
19
6
20
12
RED
YEL/GRN
GRN
WHT
1
2
4
3
A/F SENSOR
(SENSOR 1)
WHT
WHT/RED
BLK/ORN
ORN
A/F SENSOR
RELAY
T
E3
LG3
BRN/YEL
E2
SHO2S
WHT/RED
E4
SG3
PNK
E6
SHO2SHTC
BLK/WHT
BRN/
YEL
U
C401
14
15
21
16
22
BRN/YEL
WHT/RED
PNK
BLK/WHT
BLK/ORN
BRN/YEL
WHT/RED
PNK
BLK/WHT
BLK/ORN
2
1
3
4
SECONDARY
HO2S
(SENSOR 2)
C503
E5
VCC3
YEL/BLU
E14
FTP
LT GRN
3
14
13
YEL/BLU
LT GRN
PNK
LT GRN
PNK
1
3
2
FTP SENSOR
E21
VSV
LT GRN/RED
4
LT GRN/RED
2
BLK/ORN
15
BLK/ORN
1
EVAP
CANISTER VENT
SHUT VALVE
E20
2WBS
BLU/RED
5
BLU/RED
2
BLK/ORN
1
BLK/
ORN
V
EVAP BYPASS
SOLENOID
VALVE

(cont'd)

System Description (cont'd)

ECM/PCM Circuit Diagram—2002-2004 Models (cont'd)

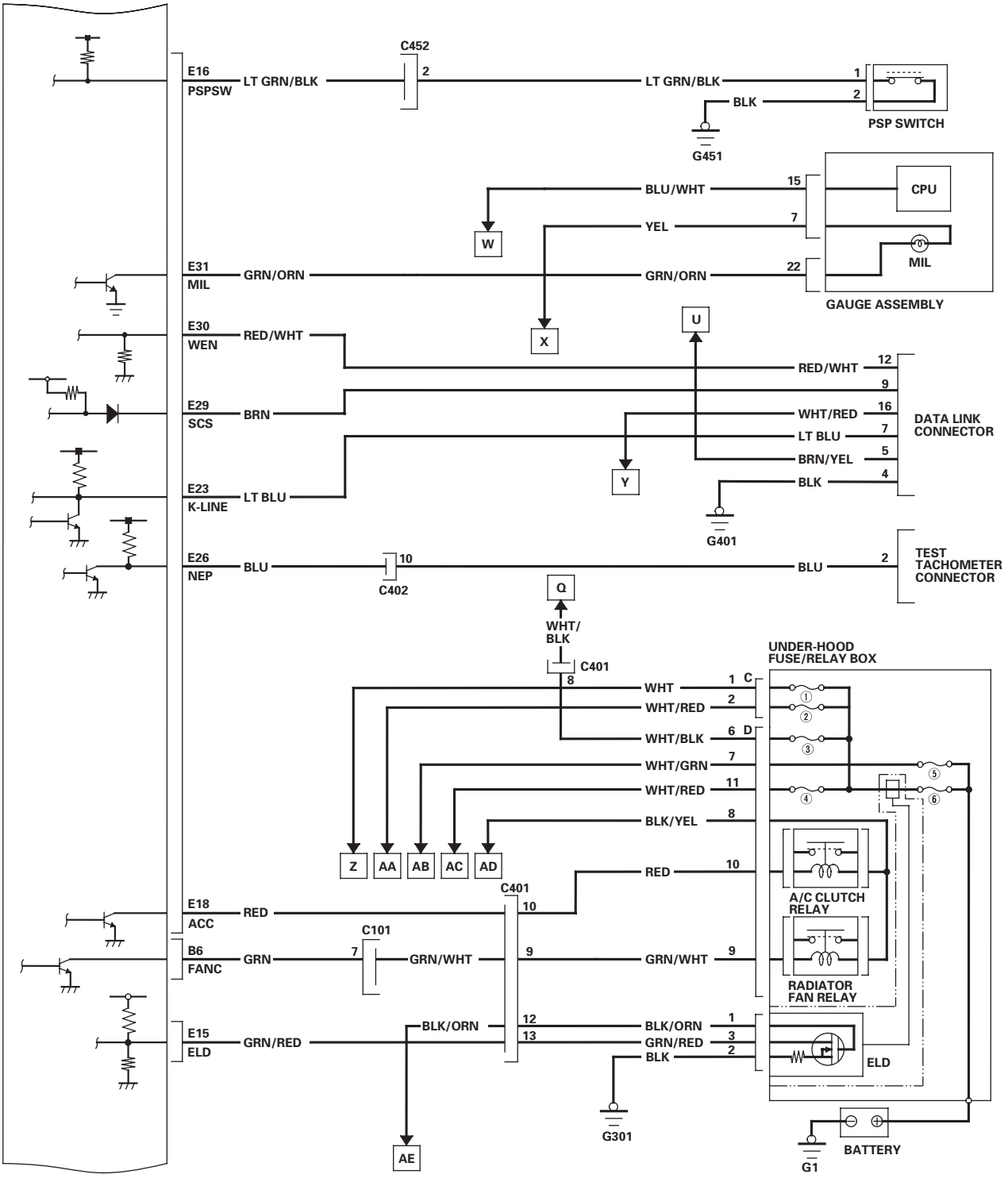

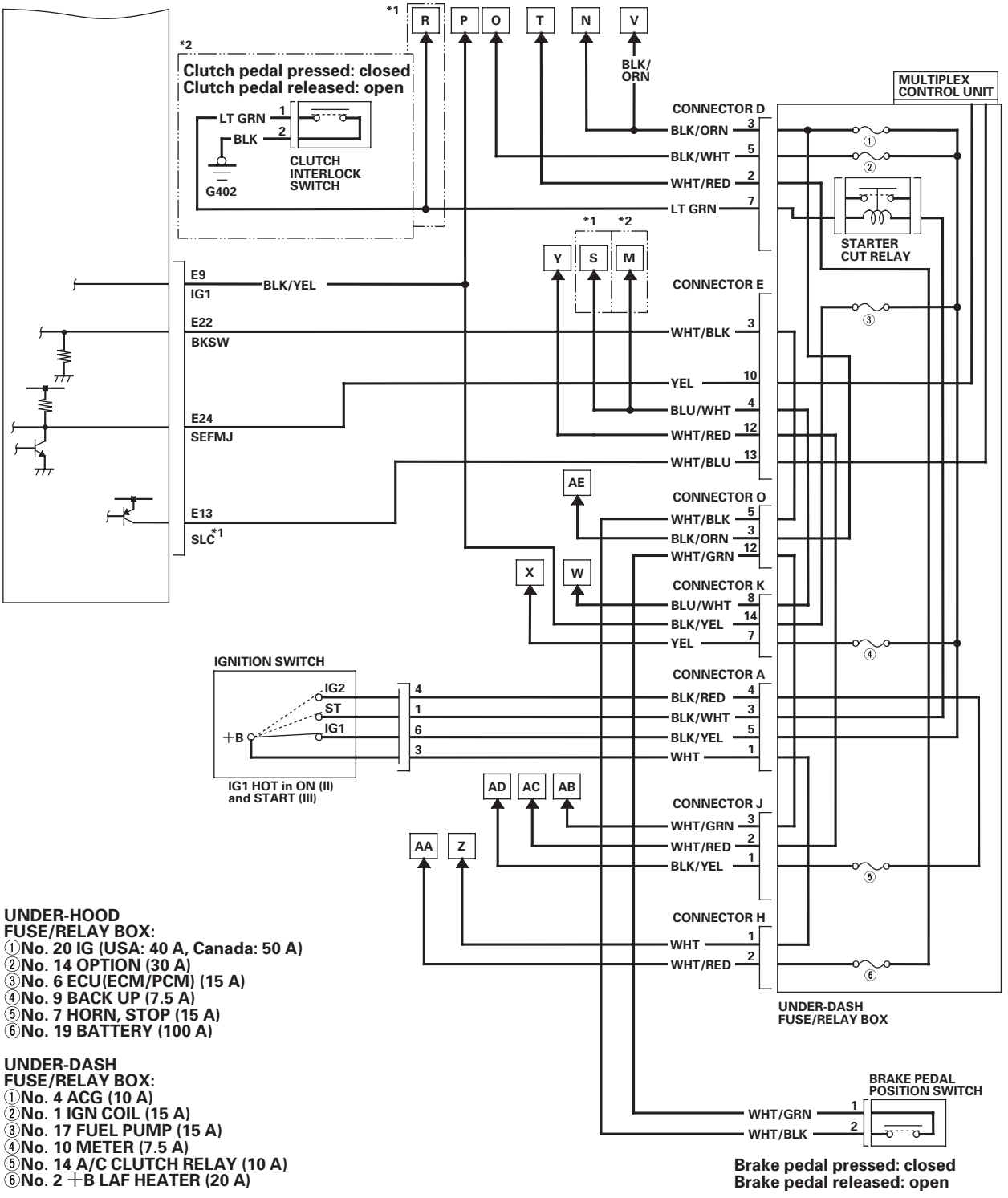

UNDER-HOOD FUSE/RELAY BOX:
①No. 20 IG (USA: 40 A, Canada: 50 A)
②No. 14 OPTION (30 A)
③No. 6 ECU(ECM/PCM) (15 A)
④No. 9 BACK UP (7.5 A)
⑤No. 7 HORN, STOP (15 A)
⑥No. 19 BATTERY (100 A)

UNDER-DASH FUSE/RELAY BOX:
①No. 4 ACG (10 A)
②No. 1 IGN COIL (15 A)
③No. 17 FUEL PUMP (15 A)
④No. 10 METER (7.5 A)
⑤No. 14 A/C CLUTCH RELAY (10 A)
⑥No. 2 +B LAF HEATER (20 A)

(cont'd)

System Description (cont'd)

ECM/PCM Circuit Diagram—2005-2006 Models

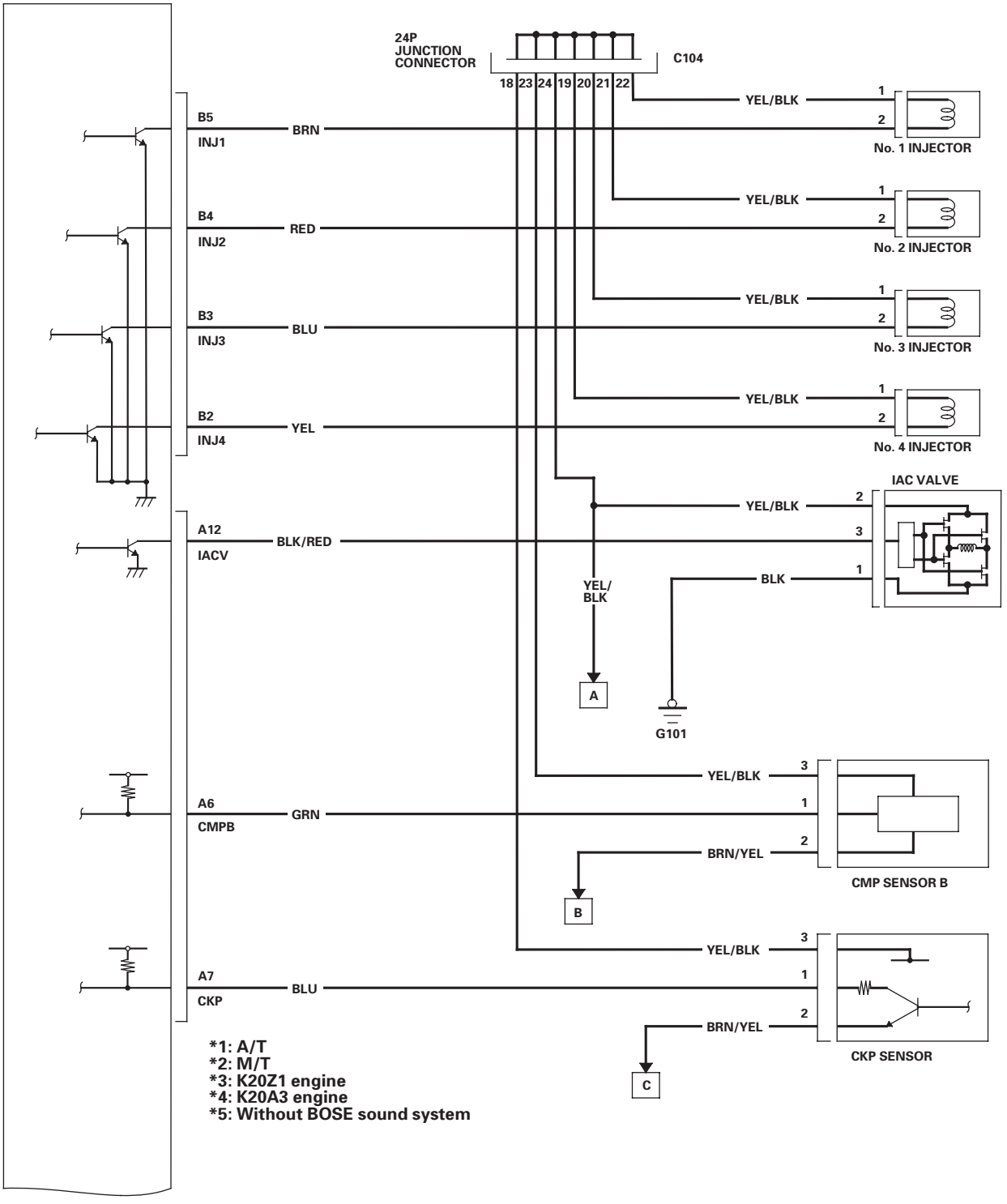

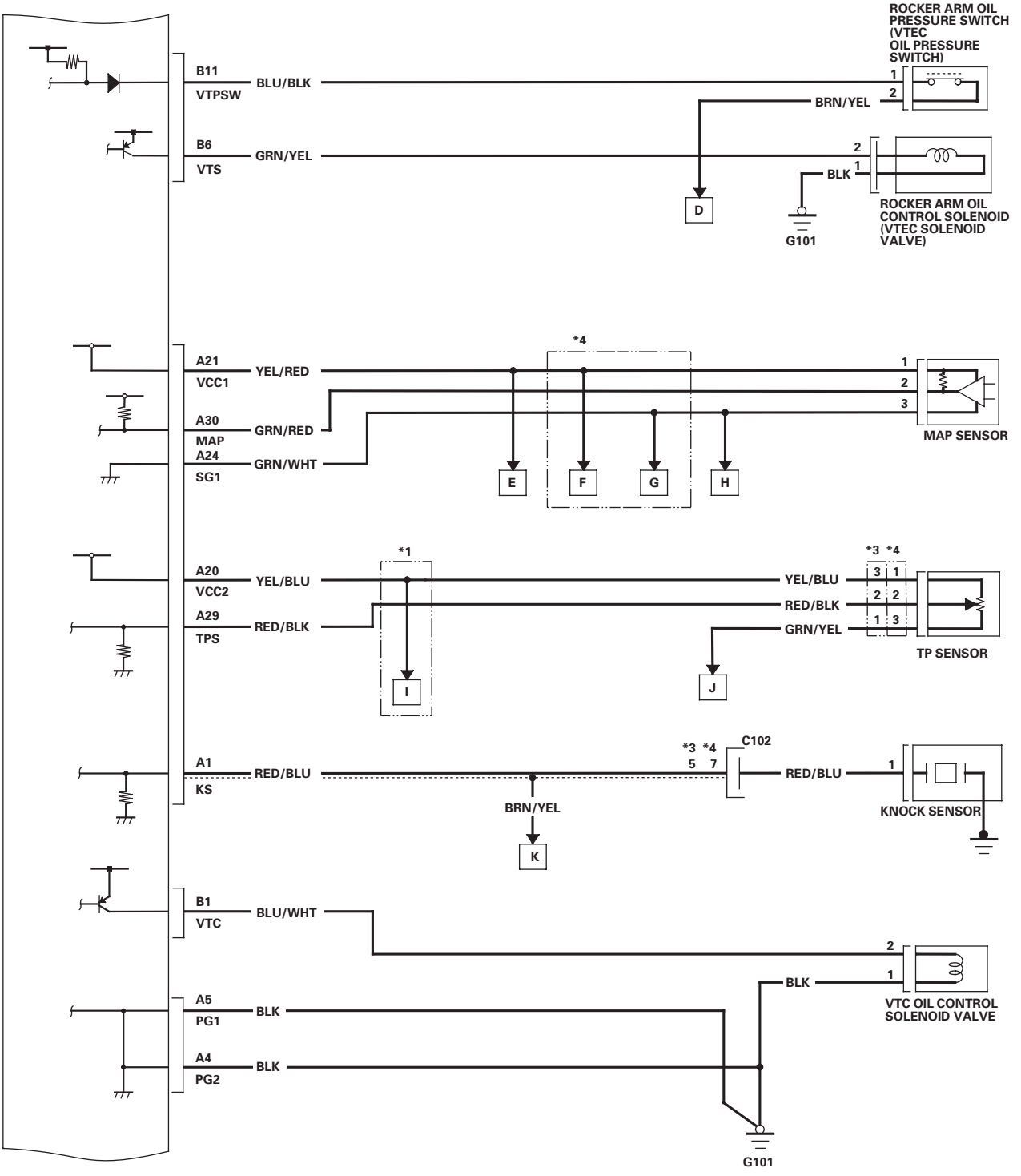
ROCKER ARM OIL PRESSURE SWITCH (VTEC OIL PRESSURE SWITCH)
B11
VTPSW
BLU/BLK
BRN/YEL
B6
VTS
GRN/YEL
BLK
D
G101
ROCKER ARM OIL CONTROL SOLENOID (VTEC SOLENOID VALVE)
*4
A21
VCC1
YEL/RED
A30
MAP
GRN/RED
A24
SG1
GRN/WHT
E
F
G
H
MAP SENSOR
*1
*3 *4
A20
VCC2
YEL/BLU
A29
TPS
RED/BLK
YEL/BLU
RED/BLK
GRN/YEL
I
J
TP SENSOR
A1
KS
RED/BLU
*3 *4
C102
RED/BLU
BRN/YEL
K
KNOCK SENSOR
B1
VTC
BLU/WHT
BLK
VTC OIL CONTROL SOLENOID VALVE
A5
PG1
BLK
A4
PG2
BLK
G101

(cont'd)

System Description (cont'd)

ECM/PCM Circuit Diagram—2005-2006 Models (cont'd)

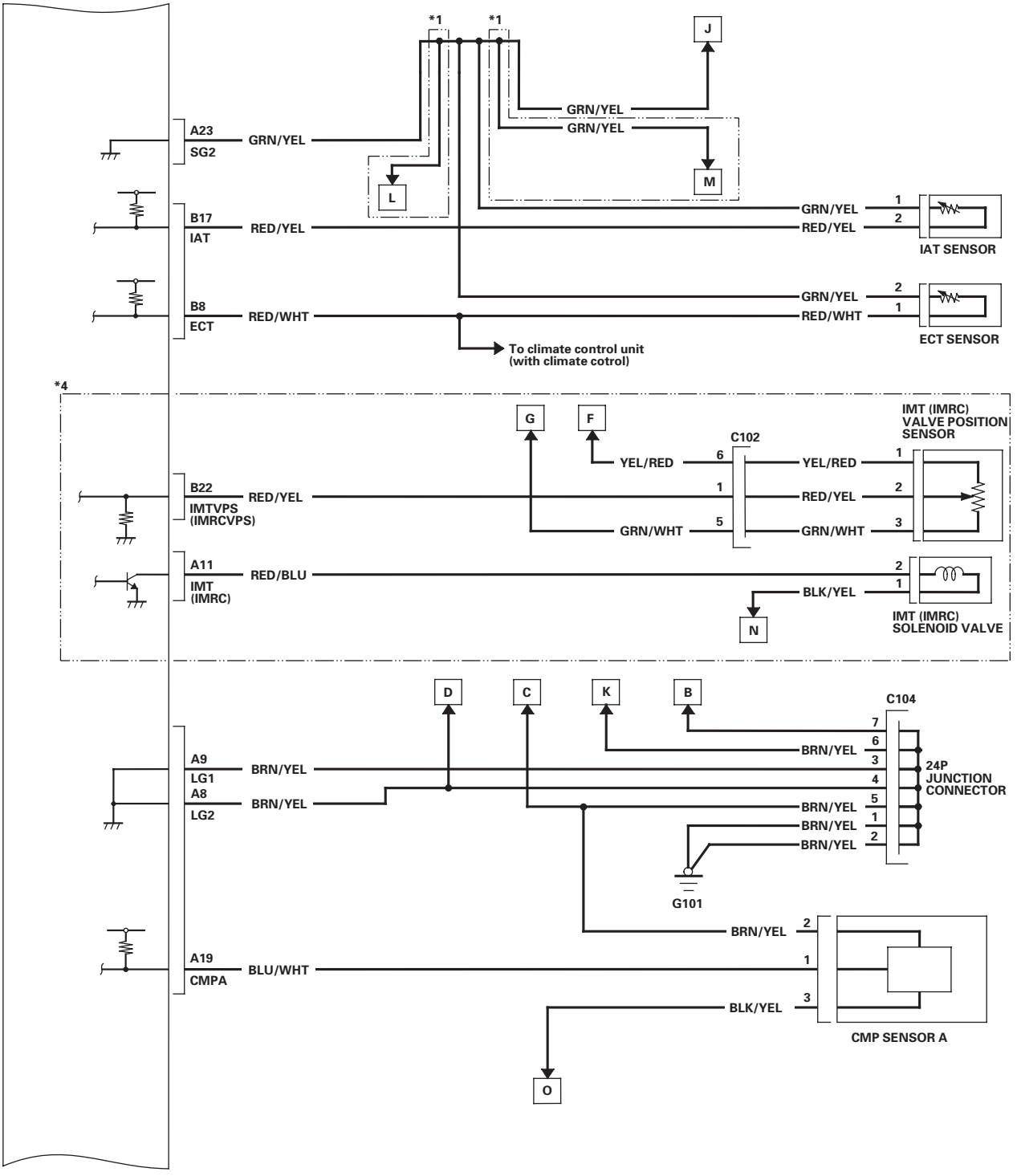

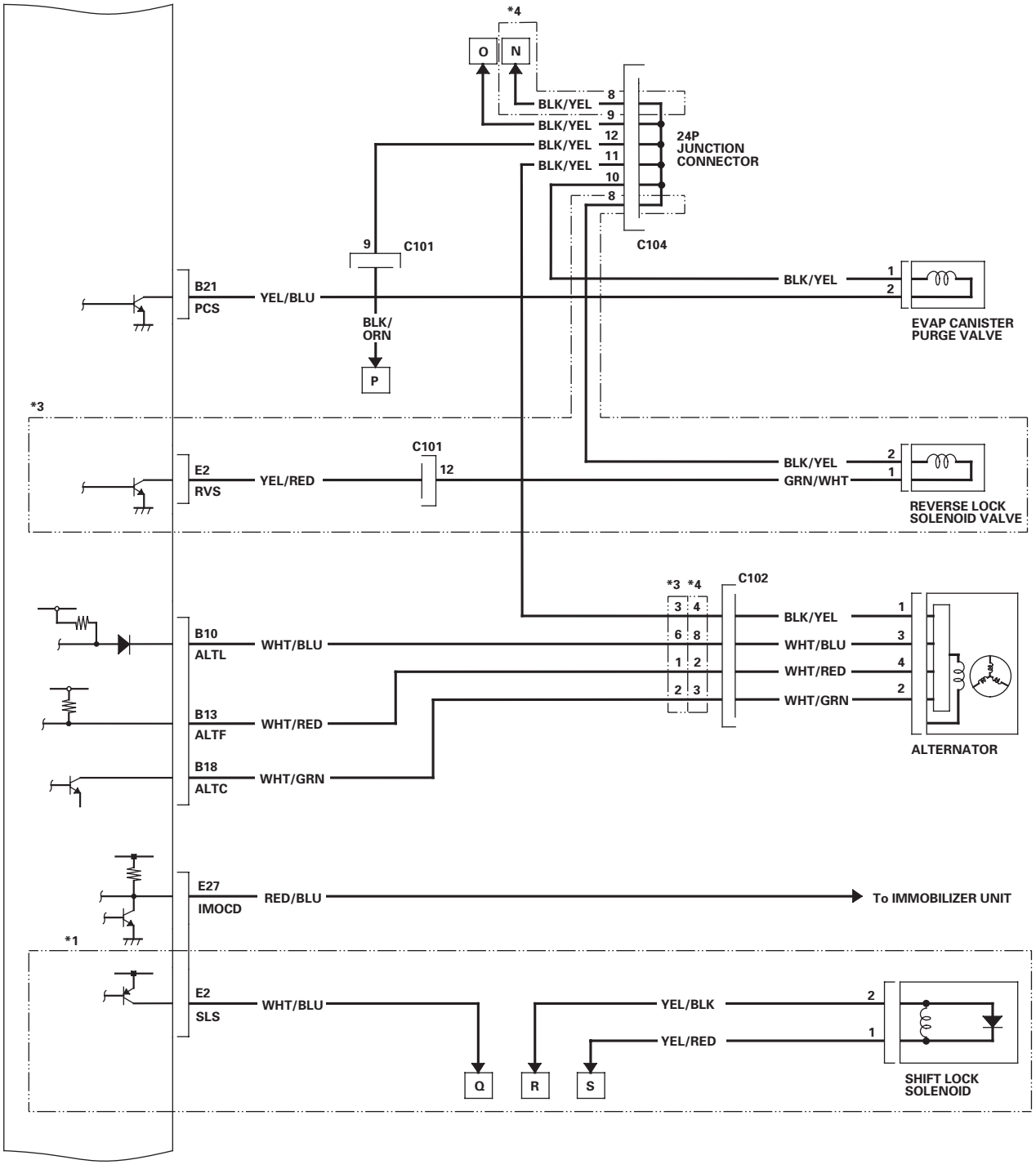
*4
O
N
BLK/YEL
BLK/YEL
BLK/YEL
BLK/YEL
8
9
12
11
10
8
24P
JUNCTION
CONNECTOR
C104
9
C101
B21
PCS
YEL/BLU
BLK/
ORN
P
BLK/YEL
1
2
EVAP CANISTER
PURGE VALVE
*3
E2
RVS
YEL/RED
C101
12
BLK/YEL
GRN/WHT
2
1
REVERSE LOCK
SOLENOID VALVE
*3 *4
C102
3 4
6 8
1 2
2 3
B10
ALTL
WHT/BLU
B13
ALTF
WHT/RED
B18
ALTC
WHT/GRN
BLK/YEL
WHT/BLU
WHT/RED
WHT/GRN
1
3
4
2
ALTERNATOR
E27
IMOCD
RED/BLU
To IMMOBILIZER UNIT
*1
E2
SLS
WHT/BLU
YEL/BLK
YEL/RED
2
1
Q
R
S
SHIFT LOCK
SOLENOID

(cont'd)

System Description (cont'd)

ECM/PCM Circuit Diagram—2005-2006 Models (cont'd)

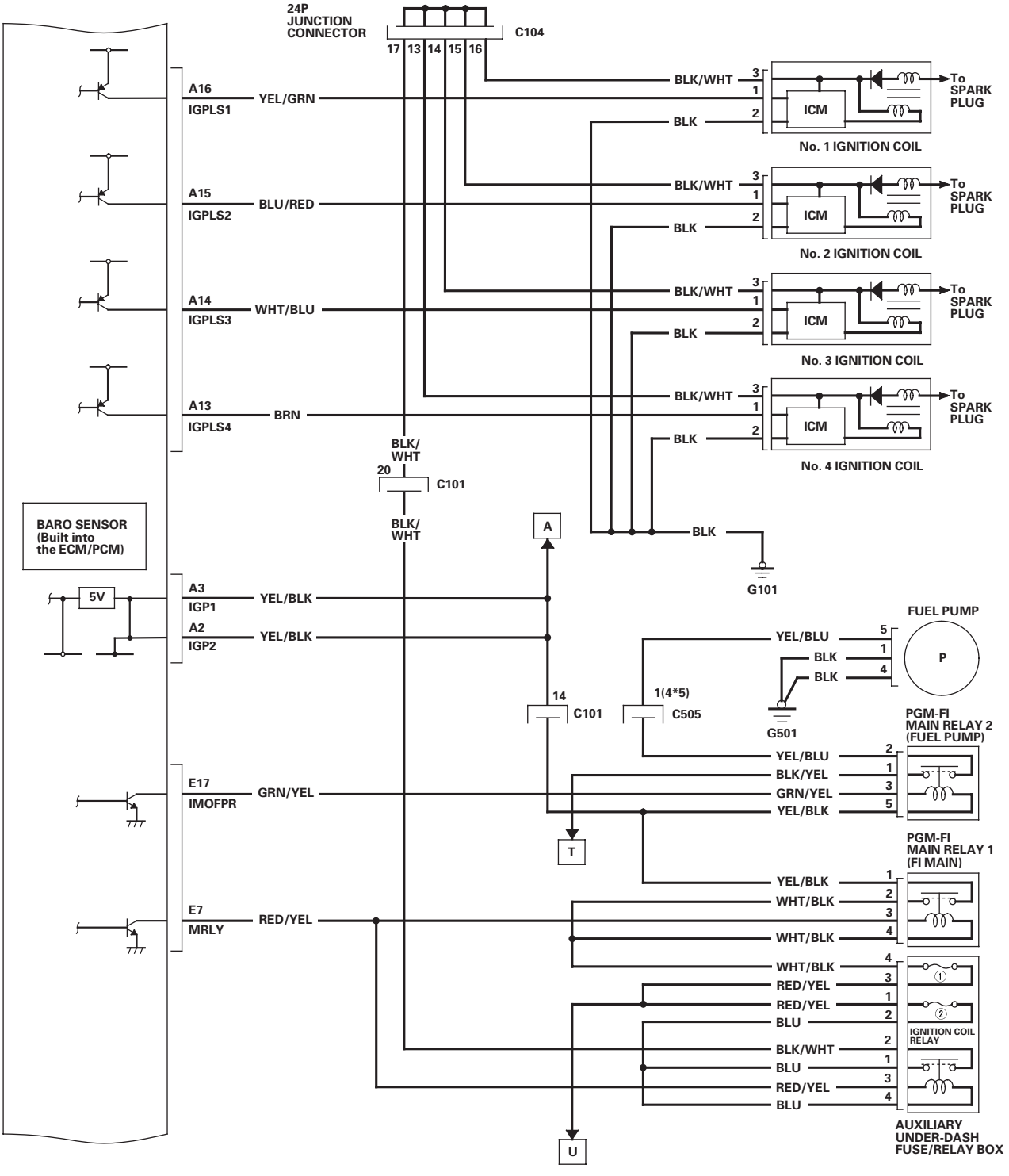

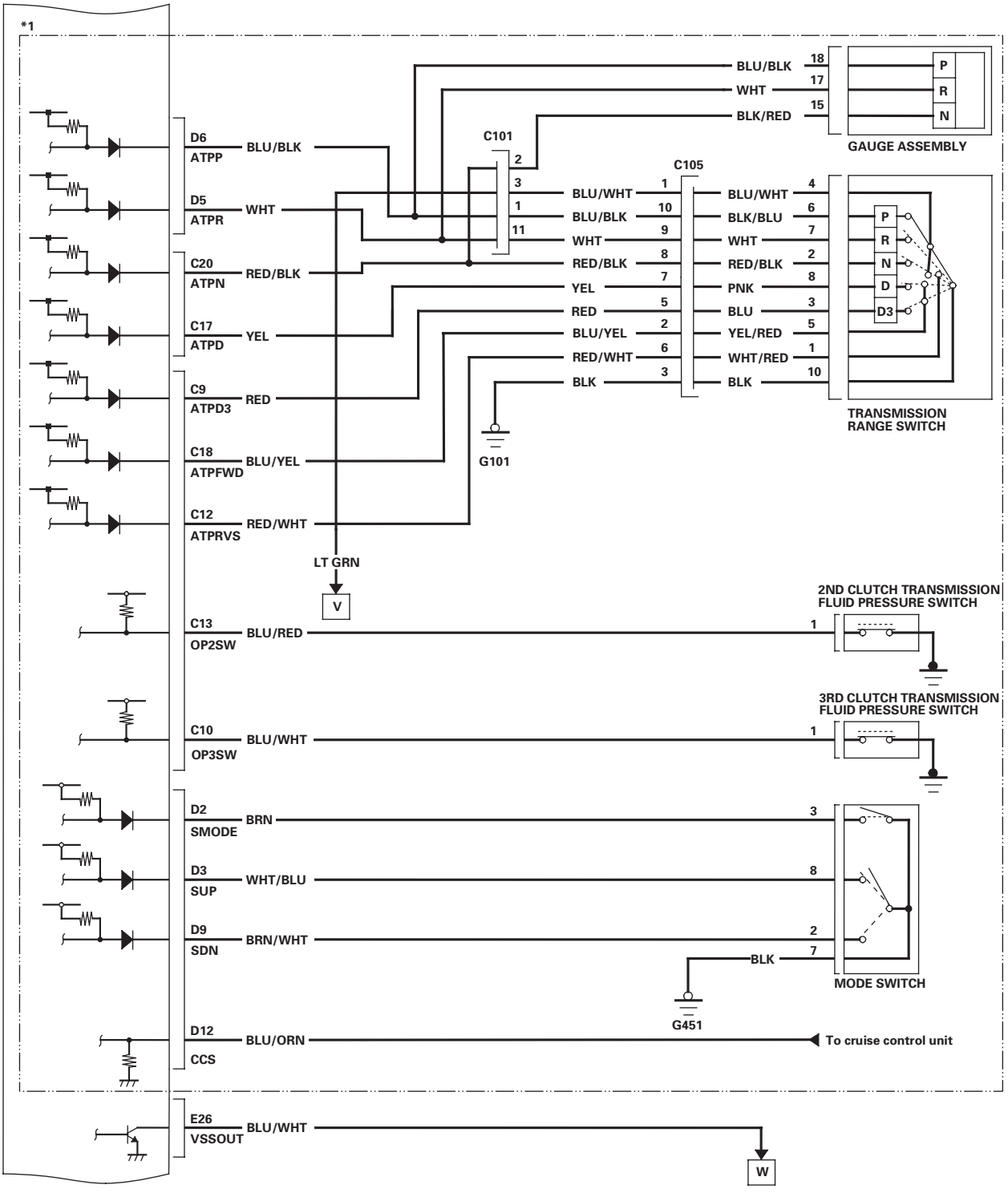
*1
D6
ATPP
BLU/BLK
D5
ATPR
WHT
C20
ATPN
RED/BLK
C17
ATPD
YEL
C9
ATPD3
RED
C18
ATPFWD
BLU/YEL
C12
ATPRVS
RED/WHT
LT GRN
V
C13
OP2SW
BLU/RED
C10
OP3SW
BLU/WHT
D2
SMODE
BRN
D3
SUP
WHT/BLU
D9
SDN
BRN/WHT
D12
CCS
BLU/ORN
E26
VSSOUT
BLU/WHT
W
C101
C105
BLU/WHT
BLU/BLK
WHT
RED/BLK
YEL
RED
BLU/YEL
RED/WHT
BLK
BLU/WHT
BLK/BLU
WHT
RED/BLK
PNK
BLU
YEL/RED
WHT/RED
BLK
BLU/BLK
WHT
BLK/RED
GAUGE ASSEMBLY
P
R
N
TRANSMISSION
RANGE SWITCH
D
D3
G101
2ND CLUTCH TRANSMISSION
FLUID PRESSURE SWITCH
3RD CLUTCH TRANSMISSION
FLUID PRESSURE SWITCH
MODE SWITCH
BLK
G451
To cruise control unit

(cont'd)

System Description (cont'd)

ECM/PCM Circuit Diagram—2005-2006 Models (cont'd)

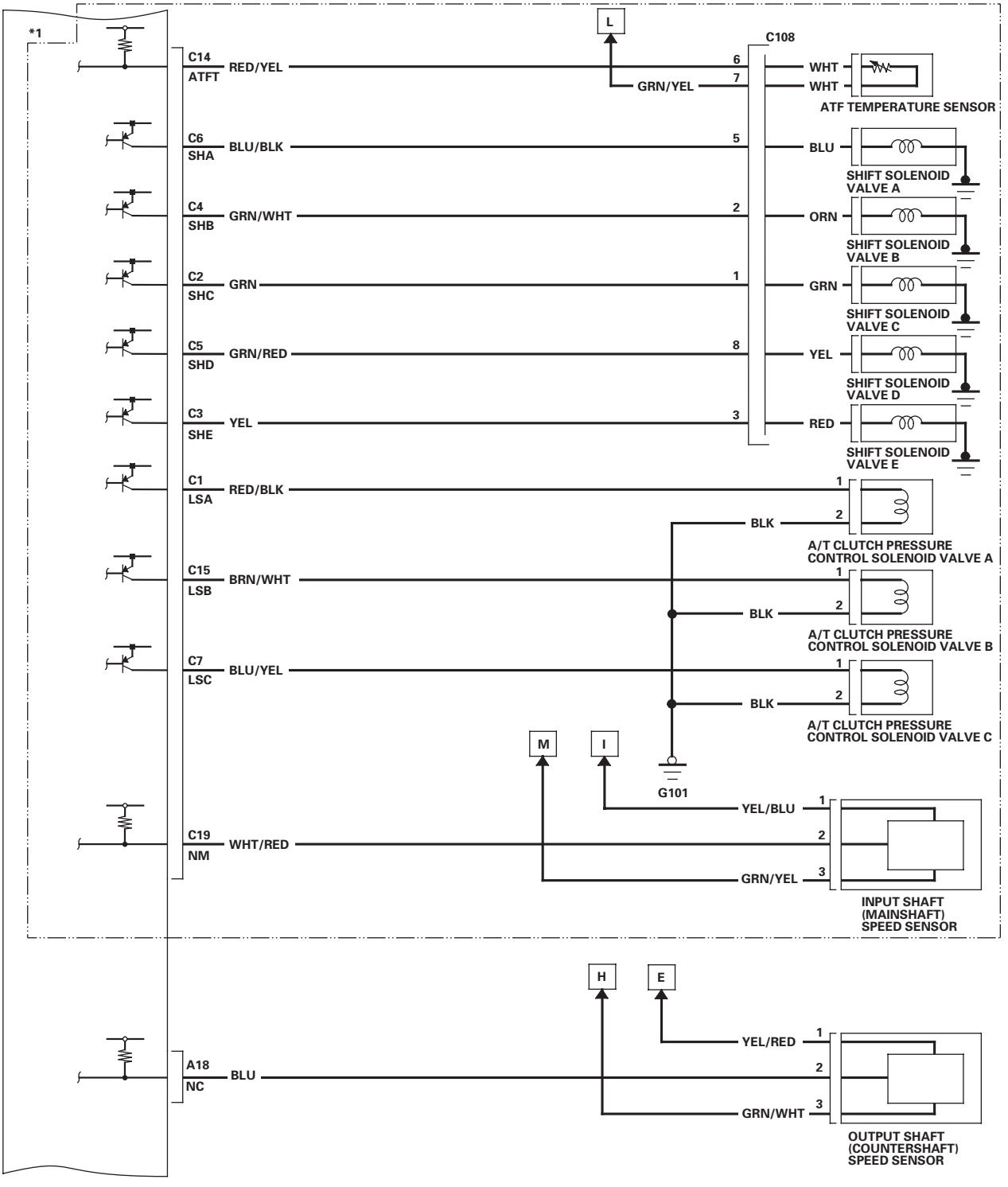

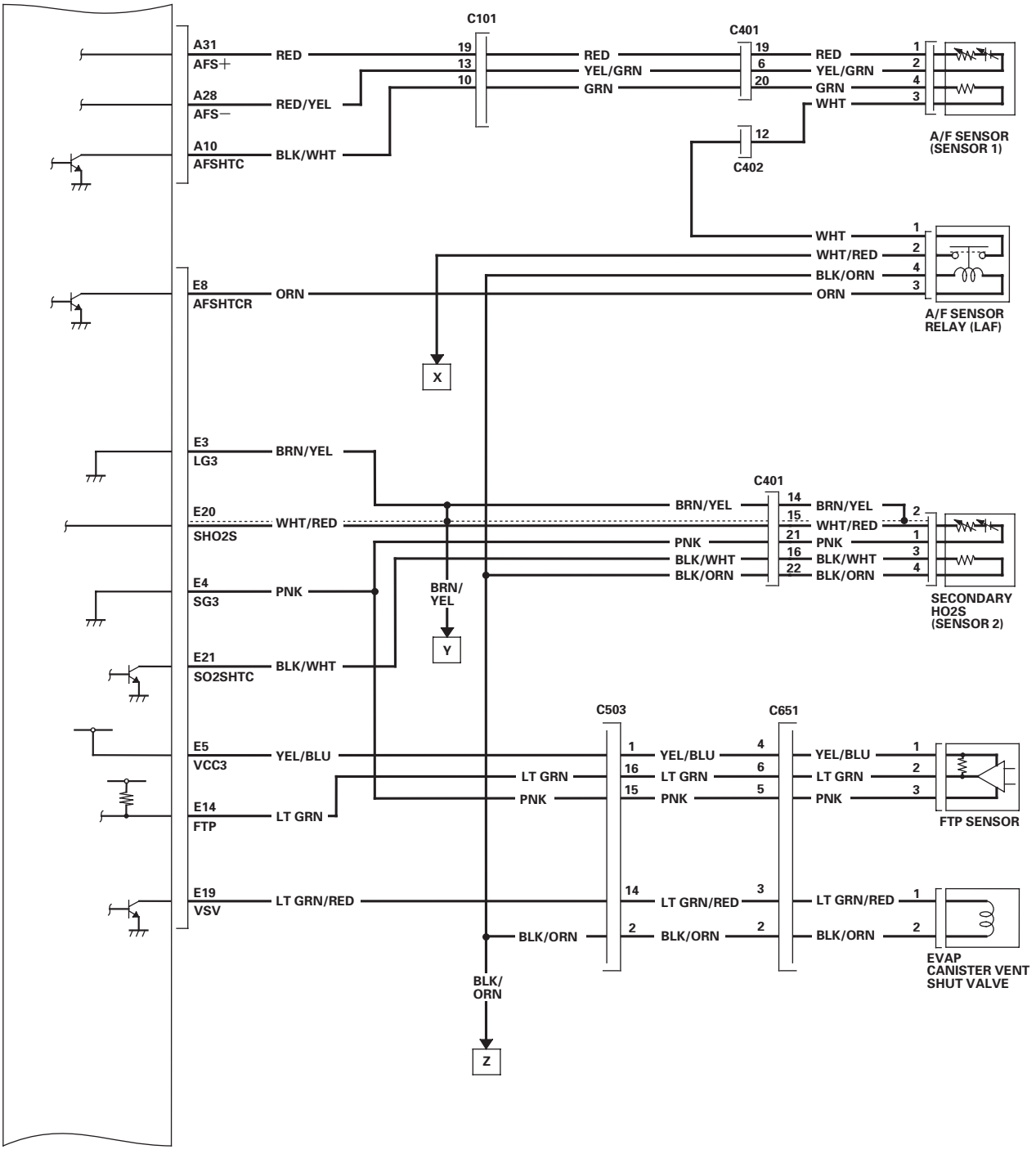
C101
C401
C402
C503
C651
A31
AFS+
A28
AFS−
A10
AFSHTC
E8
AFSHTCR
E3
LG3
E20
SHO2S
E4
SG3
E21
SO2SHTC
E5
VCC3
E14
FTP
E19
VSV
RED
RED/YEL
BLK/WHT
ORN
BRN/YEL
WHT/RED
PNK
BLK/WHT
BLK/ORN
YEL/BLU
LT GRN
LT GRN/RED
YEL/GRN
GRN
WHT
A/F SENSOR (SENSOR 1)
A/F SENSOR RELAY (LAF)
SECONDARY HO2S (SENSOR 2)
FTP SENSOR
EVAP CANISTER VENT SHUT VALVE
BRN/ YEL
BLK/ ORN
X
Y
Z

(cont'd)

System Description (cont'd)

ECM/PCM Circuit Diagram—2005-2006 Models (cont'd)

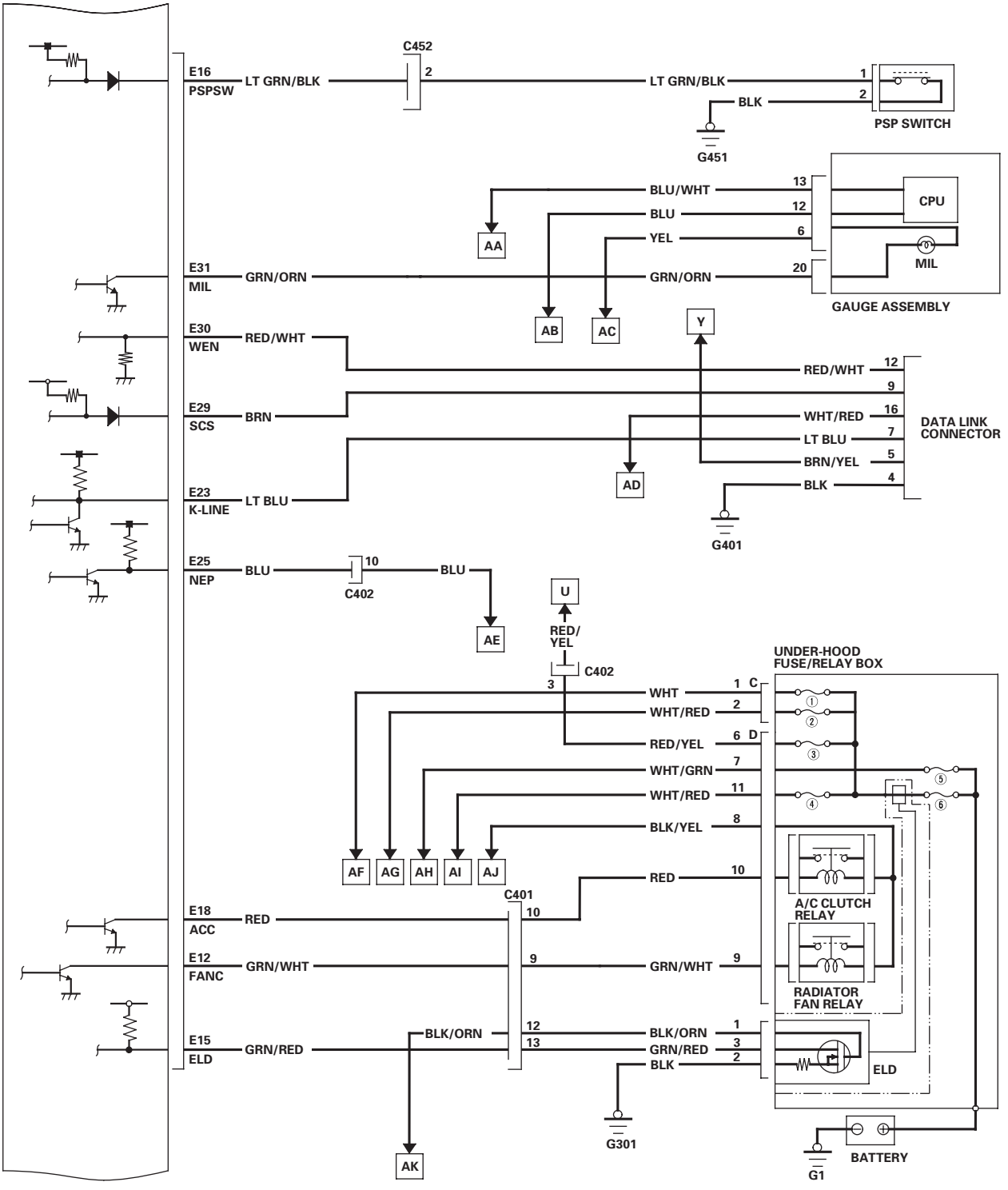

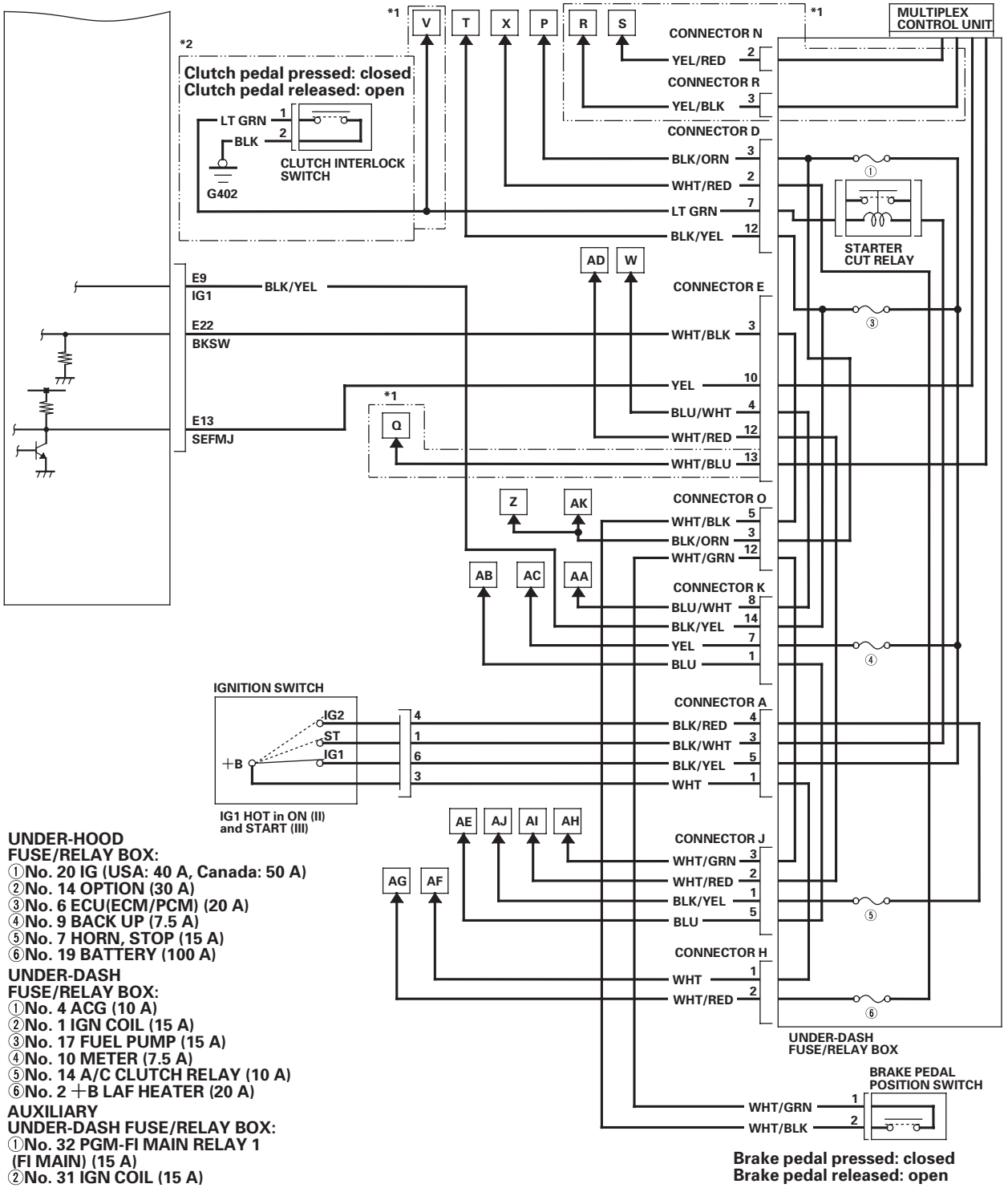

UNDER-HOOD FUSE/RELAY BOX:
①No. 20 IG (USA: 40 A, Canada: 50 A)
②No. 14 OPTION (30 A)
③No. 6 ECU(ECM/PCM) (20 A)
④No. 9 BACK UP (7.5 A)
⑤No. 7 HORN, STOP (15 A)
⑥No. 19 BATTERY (100 A)

UNDER-DASH FUSE/RELAY BOX:
①No. 4 ACG (10 A)
②No. 1 IGN COIL (15 A)
③No. 17 FUEL PUMP (15 A)
④No. 10 METER (7.5 A)
⑤No. 14 A/C CLUTCH RELAY (10 A)
⑥No. 2 +B LAF HEATER (20 A)

AUXILIARY UNDER-DASH FUSE/RELAY BOX:
①No. 32 PGM-FI MAIN RELAY 1 (FI MAIN) (15 A)
②No. 31 IGN COIL (15 A)

How to Set Readiness Codes

Malfunction Indicator Lamp (MIL) Indication (In relation to Readiness Codes)

The vehicle has certain ''readiness codes'' that are part of the on-board diagnostics for the emissions systems. If the vehicle's battery has been disconnected or gone dead, if the DTCs have been cleared, or if the ECM/PCM has been reset, these readiness codes are reset. In some states, part of the emissions testing is to make sure these codes are set to complete. If all of them are not set to complete, the vehicle may fail the emission test, or the test cannot be finished.

To check if the readiness codes are set to complete, turn the ignition switch ON (II), but do not start the engine. The MIL will come on for 15—20 seconds. If it then goes off, the readiness codes are complete. If it flashes five times, one or more readiness codes are not set to complete. To set readiness codes from incomplete to complete, do the procedure for the appropriate code.

2005-2006 Models
To check the status of a specific DTC system, check the OBD status in the DTC MENU with the HDS (see page 11-8). This screen displays the code, the current data list of the enable criteria, and the status of the readiness testing.

Catalytic Converter Monitor and Readiness Code

NOTE:
- Do not turn the ignition switch off during the procedure.
- All readiness codes are cleared when the battery is disconnected or when the ECM/PCM is cleared with the HDS or a scan tool.
- Low ambient temperatures or excessive stop-and-go traffic may increase the drive time needed to switch the readiness code from incomplete to complete.
- The readiness code will not switch to complete until all the enable criteria are met.
- If a fault in the secondary HO2S system caused the MIL to come on, the readiness code cannot be set to complete until you correct the fault.

Enable Criteria

- ECT at 158 °F (70 °C) or higher.
- Intake air temperature (IAT) at 20 °F (—7 °C) or higher.
- Vehicle speed sensor (VSS) reads more than 25 mph (40 km/h).

Procedure

When the HDS is used (2002-2006 Models)

1. Connect the HDS to the vehicle's data link connector (DLC), and bring up the READINESS CODEs screen for Catalyst in the DTCs MENU.

2. Start the engine.

3. Test-drive the vehicle under stop-and-go conditions with short periods of steady cruise. After about 5 miles (8 km), the readiness code should switch to complete.

4. If the readiness code is still not set to complete, check for a Temporary DTC with the HDS. If there is no DTC, one or more of the enable criteria were probably not met; repeat the procedure.

When a scan tool is used (2002-2004 Models)

1. Connect a scan tool to the vehicle's data link connector (DLC), and bring up the tool's generic OBD II mode.

2. Start the engine.

3. Test-drive the vehicle under stop-and-go conditions with short periods of steady cruise. After about 5 miles (8 km), the readiness code should switch from incomplete to complete.

4. If the readiness code is still set to incomplete, check for a Temporary DTC. If there is no DTC, one or more of the enable criteria were probably not met; repeat the procedure.

Evaporative Emission (EVAP) Control System Monitor and Readiness code

NOTE:
- All readiness codes are cleared when the battery is disconnected or when the ECM/PCM is cleared with the HDS or a scan tool (2002-2004 models).
- The enable criteria must be repeated if the intake air temperature (IAT) drops lower than 36 ℉ (20 ℃) from its value at engine start up.
- At engine start up, ECT and IAT are higher than 32 ℉ (0 ℃), but lower than 95 ℉ (35 ℃).
- At engine start up, the ECT and IAT are within 12 ℉ (7 ℃) of each other.

Enable Criteria

- Battery voltage is higher than 10.5 V.
- Engine at idle.
- ECT sensor between 176 ℉ (80 ℃) and 212 ℉ (100 ℃).
- MAP sensor less than 46.6 kPa (14 in.Hg, 350 mmHg).
- Vehicle speed 0 mph (0 km/h).
- IAT sensor between 32 ℉ (0 ℃) and 212 ℉ (100 ℃).

(cont'd)

How to Set Readiness Codes (cont'd)

Procedure

When the HDS is used (2002-2006 Models)

1. Connect the HDS to the vehicle's data link connector (DLC).

2. Start the engine.

3. Select EVAP TEST in the INSPECTION MENU with the HDS, then select the FUNCTION TEST in the EVAP TEST MENU.

   - If the functions are normal, readiness is complete.
   - If the functions are not normal, go to the next step.

4. If the readiness code is still not set to complete, check for a Temporary DTC. If there is no DTC, one or more of the enable criteria were probably not met; repeat the procedure.

When a scan tool is used (2002-2004 Models)

1. Connect a scan tool to the vehicle's data link connector (DLC), and bring up the tool's generic OBD II mode.

2. Start the engine.

3. Test-drive the vehicle under stop-and-go conditions with short periods of steady cruise. After about 2.5 miles (4.0 km), the readiness code should switch from incomplete to complete.

4. If the readiness code is still set to incomplete, check for a Temporary DTC. If there is no DTC, one or more of the enable criteria were probably not met; repeat the procedure.

Air Fuel Ratio (A/F) Sensor Monitor and Readiness Code

NOTE:
- Do not turn the ignition switch off during the procedure.
- All readiness codes are cleared when the battery is disconnected or when the ECM/PCM is cleared with the HDS or a scan tool.

Enable Criteria

ECT at 140 ℉ (60 ℃) or higher.

Procedure

When the HDS is used (2002-2006 Models)

1. Start the engine.

2. Connect the HDS to the vehicle's data link connector (DLC).

3. Test-drive the vehicle under stop-and-go conditions with short periods of steady cruise. During the drive, decelerate (with the throttle fully closed) for 5 seconds. After about 3.5 miles (5.6 km), the readiness code should switch from incomplete to complete.

4. Check the readiness codes screen for the Air Fuel Ratio (A/F) Sensor in the DTCs MENU with the HDS.

   - If the screen shows complete, readiness is complete.
   - If the screen shows not complete, go to the next step.

5. Check for a Temporary DTC. If there is no DTC, the enable criteria was probably not met. Select the DATA LIST Menu. Check the ECT in the ALL DATA LIST with the HDS. If the ECT is lower than 140 ℉ (60 ℃), run the engine until it is higher than 140 ℉ (60 ℃), then repeat the procedure.

When a scan tool is used (2002-2004 Models)

1. Connect a scan tool to the vehicle's data link connector (DLC), and bring up the tool's generic OBD II mode.

2. Start the engine.

3. Test-drive the vehicle under stop-and-go conditions with short periods of steady cruise. During the drive, decelerate (wirh the throttle fully closed) for 5 seconds. After about 3.5 miles (5.6 km), the readiness code should switch from incomplete to complete.

4. If the readiness code is still set to incomplete, check for a Temporary DTC. If there is no DTC, the enable criteria was probably not met; repeat the procedure.

Air Fuel Ratio (A/F) Sensor Heater Monitor Readiness Code

NOTE: All readiness codes are cleared when the battery is disconnected or when the ECM/PCM is cleared with the HDS or a scan tool.

Procedure

1. Connect the HDS or a scan tool to the vehicle's data link connector (DLC). Bring up the tool's generic OBD II mode (scan tool only).

2. Start the engine, and let it idle for 1 minute. The readiness code should switch from incomplete to complete.

3. If the readiness code is still set to incomplete, check for a Temporary DTC. If there is no DTC, repeat the procedure.

Misfire Monitor and Readiness Code

- This readiness code is always set to available because misfiring is continuously monitored.
- Monitoring pauses, and the misfire counter resets, if the vehicle is driven over a rough road.
- Monitoring also pauses, and the misfire counter holds at its current value, if the throttle position changes more than a predetermined value, or if driving conditions fall outside the range of any related enable criteria.

Fuel System Monitor and Readiness Code

- This readiness code is always set to available because the fuel system is continuously monitored during closed loop operation.
- Monitoring pauses when the catalytic converter, EVAP control system, and A/F sensor monitors are active.
- Monitoring also pauses when any related enable criteria are not being met. Monitoring resumes when the enable criteria is again being met.

Comprehensive Component Monitor and Readiness Code

This readiness code is always set to available because the comprehensive component monitor is continuously running whenever the engine is cranking or running.

Component Location Index

K20A2 engine

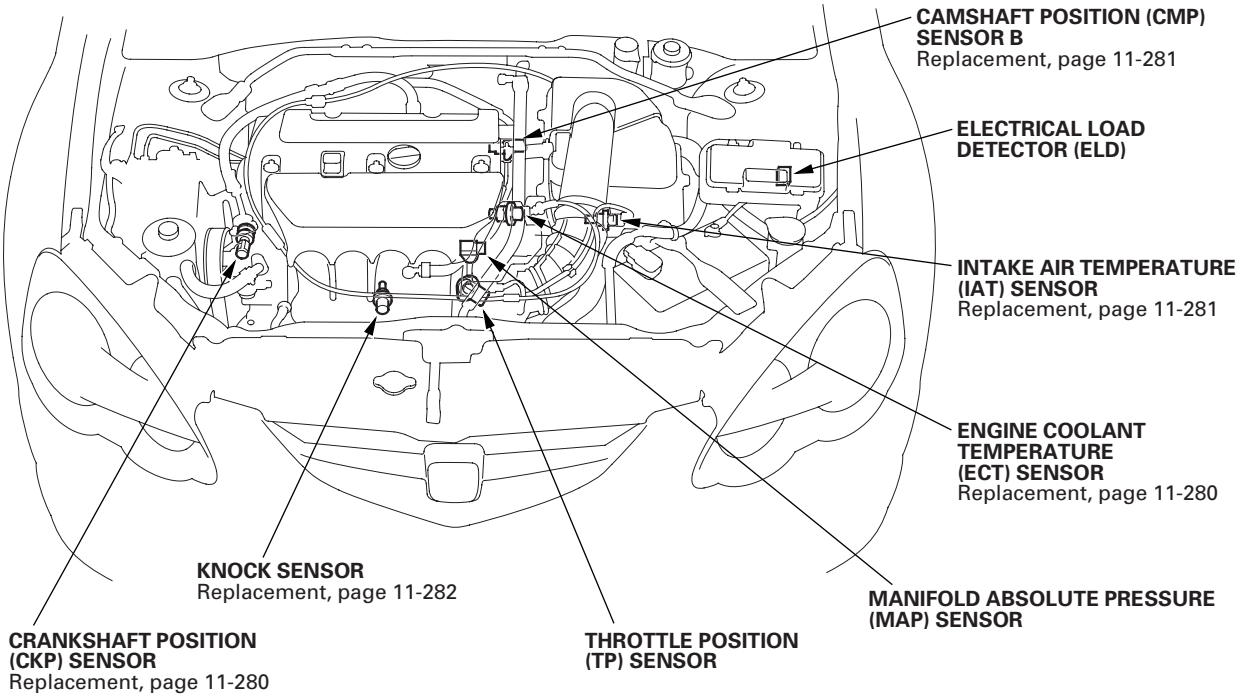

K20Z1 engine

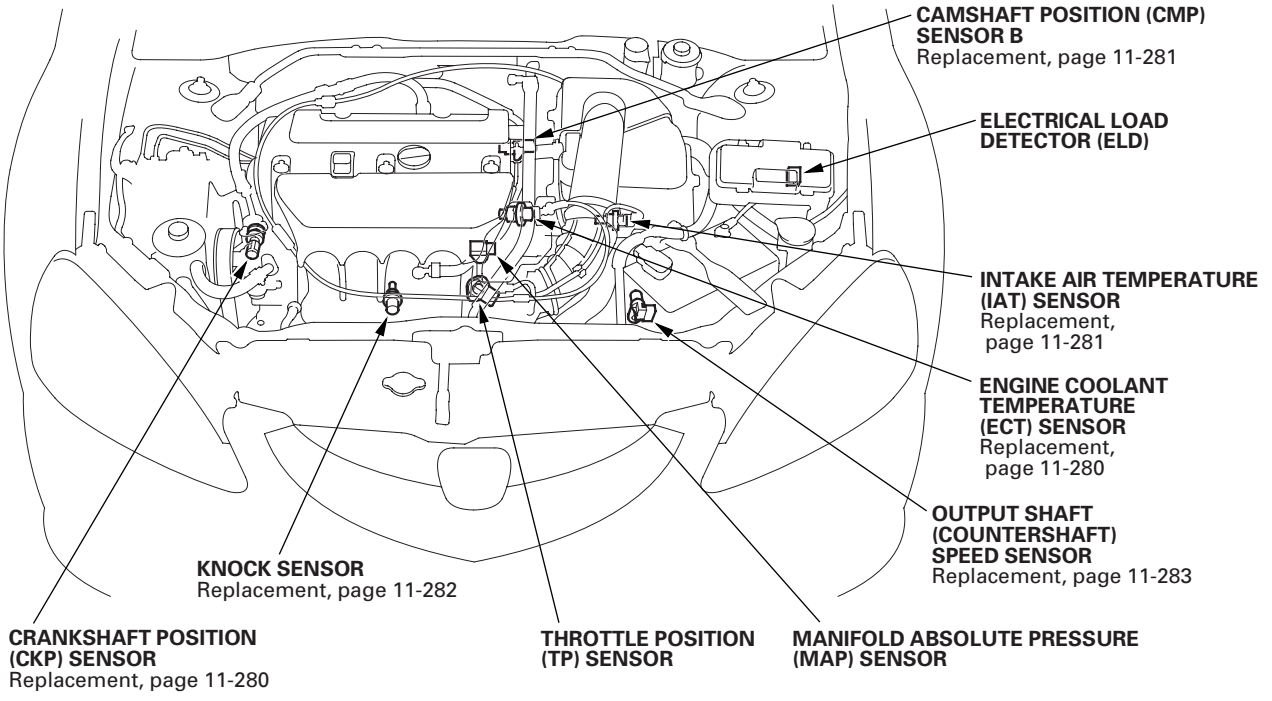

K20A3 engine—2002-2004 models

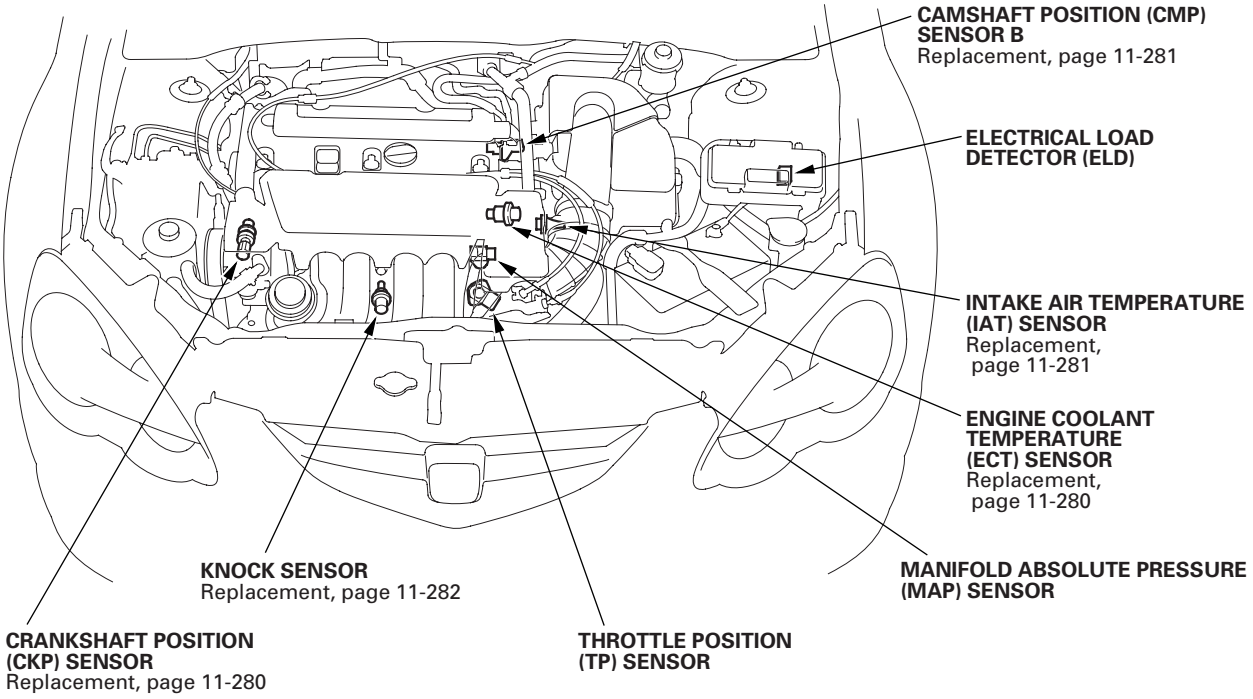

K20A3 engine—2005-2006 models

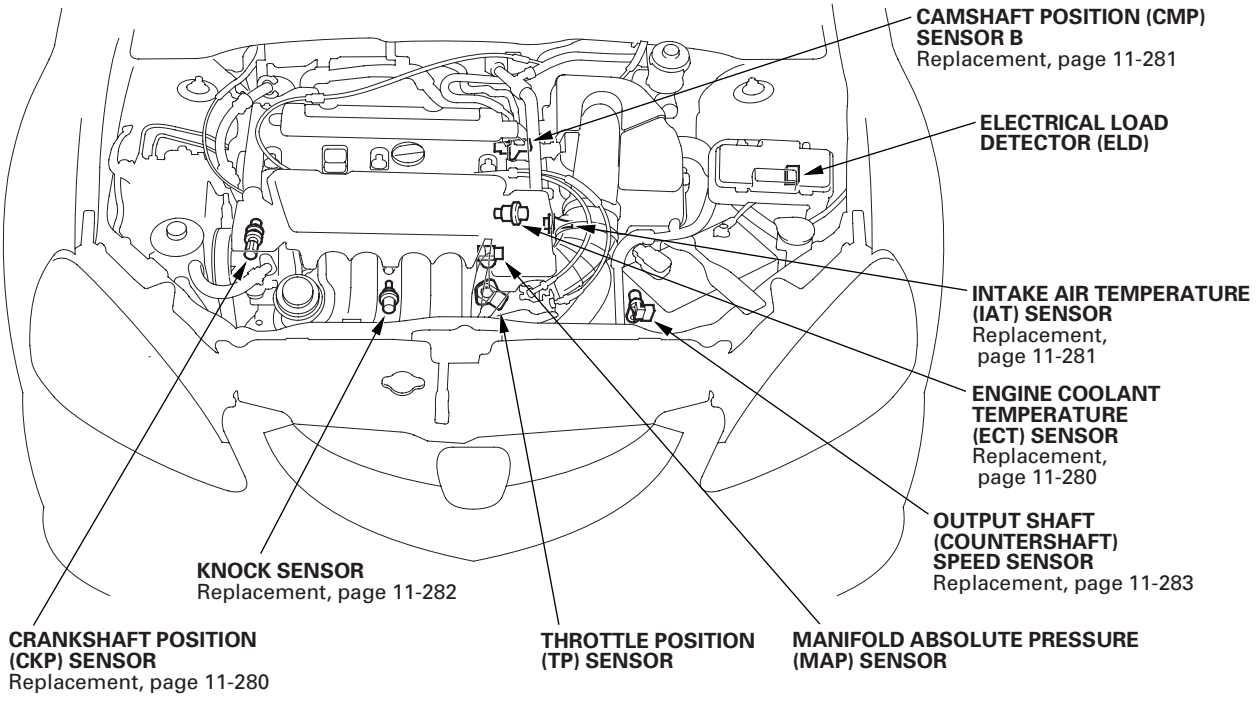

(cont'd)

Component Location Index (cont'd)

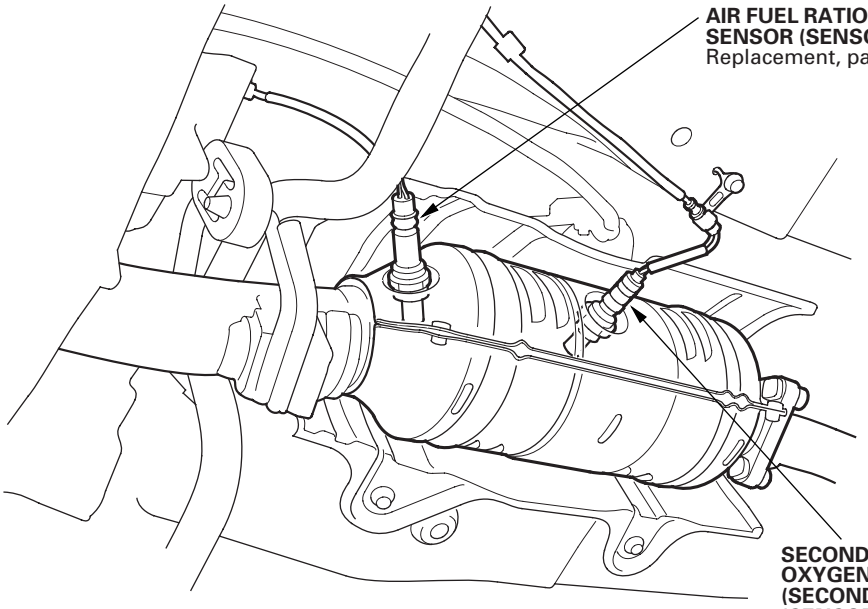

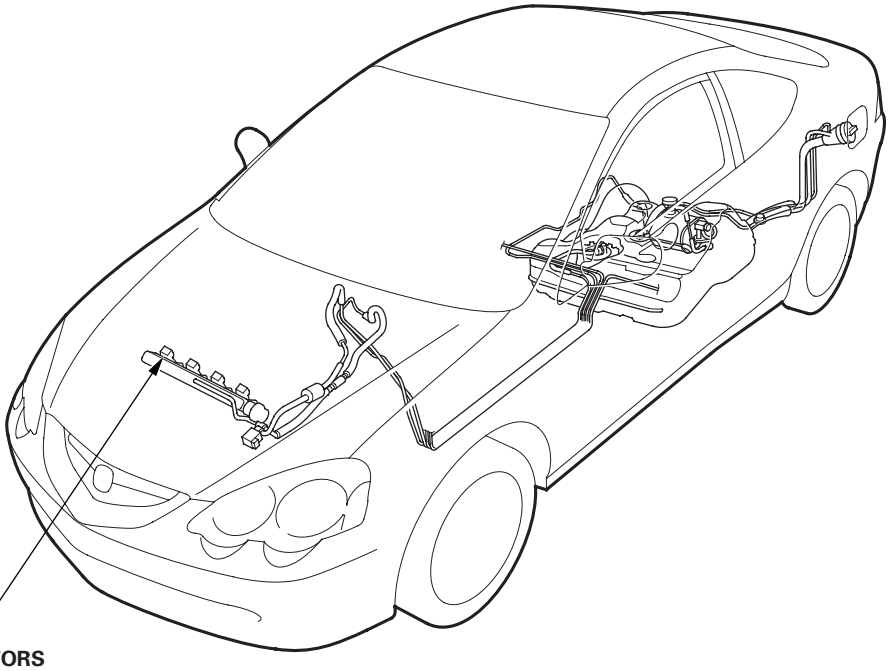

*: This illustration shows 2002-2004 models.

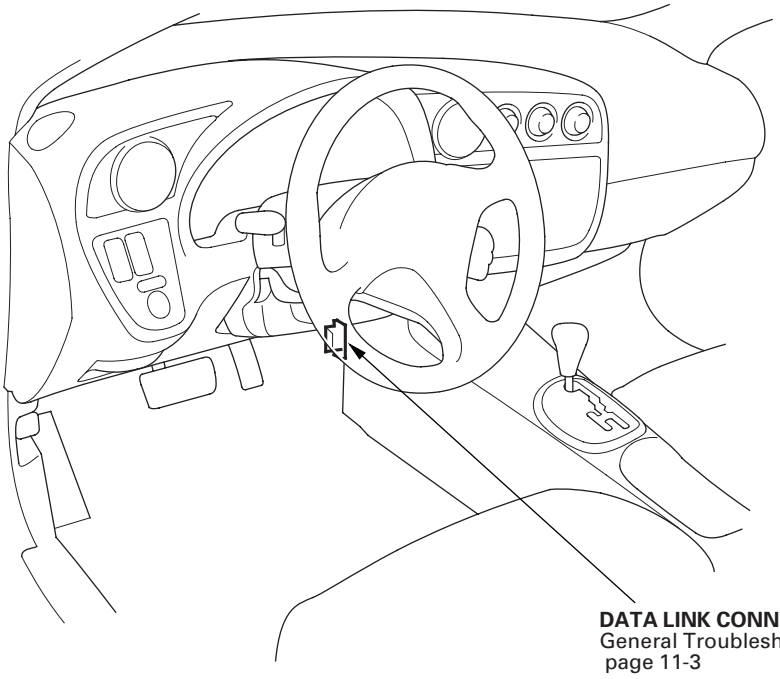
DATA LINK CONNECTOR (DLC)
General Troubleshooting Information,
page 11-3

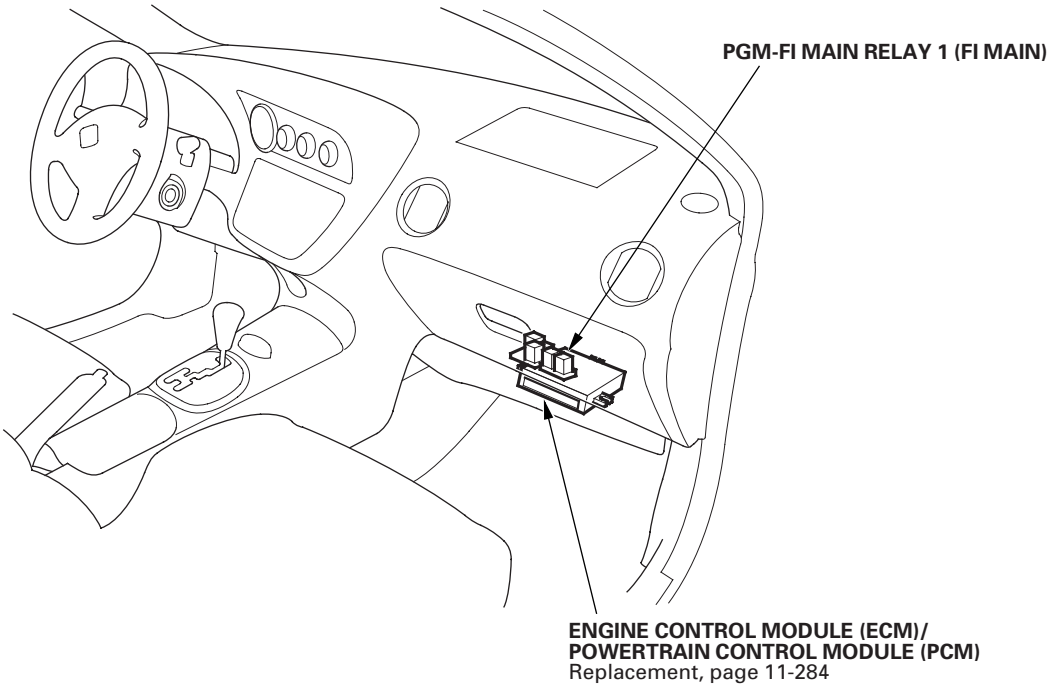
PGM-FI MAIN RELAY 1 (FI MAIN)
ENGINE CONTROL MODULE (ECM)/
POWERTRAIN CONTROL MODULE (PCM)
Replacement, page 11-284

DTC Troubleshooting

DTC P0107: MAP Sensor Circuit Low Voltage (2002-2004 models)

1. Turn the ignition switch ON (II).

2. Check the MAP with a scan tool or the HDS.

   Is about 101 kPa (30 in.Hg, 760 mmHg) or 2.9 V indicated?

   YES—Intermittent failure, system is OK at this time. Check for poor connections or loose terminals at the MAP sensor and the ECM/PCM. ■

   NO—Go to step 3.

3. Turn the ignition switch OFF.

4. Disconnect the MAP sensor 3P connector.

5. Turn the ignition switch ON (II).

6. Measure voltage between MAP sensor 3P connector terminals No. 1 and No. 3.

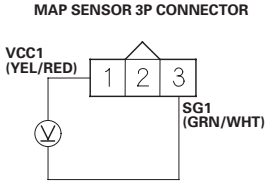

Wire side of female terminals

   Is there about 5 V?

   YES—Go to step 8.

   NO—Go to step 7.

7. Measure voltage between ECM/PCM connector terminals A11 and A21.

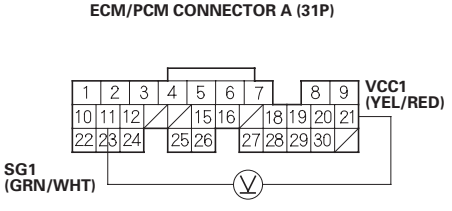

Wire side of female terminals

   Is there about 5 V?

   YES—Repair open in the wire between the ECM/PCM (A21) and the MAP sensor. ■

   NO—Update the ECM/PCM if it does not have the latest software, or substitute a known-good ECM/PCM (see page 11-6), then recheck. If the symptom/indication goes away with a known-good ECM/PCM, replace the original ECM/PCM (see page 11-284). ■

8. Check the MAP with a scan tool or the HDS.

   Is 2 kPa (0.6 in.Hg, 15 mmHg) or less, or 0 V indicated?

   YES—Go to step 9.

   NO—Replace the MAP sensor (see page 11-412). ■

9. Turn the ignition switch OFF.

10. Disconnect ECM/PCM connector A (31P).

11. Check for continuity between MAP sensor 3P connector terminal No. 2 and body ground.

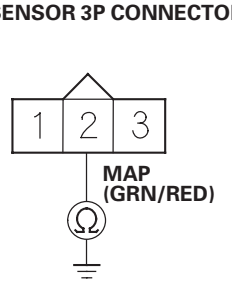

Wire side of female terminals

   Is there continuity?

   YES—Repair short in the wire between the ECM/PCM (A19) and the MAP sensor. ■

   NO—Update the ECM/PCM if it does not have the latest software, or substitute a known-good ECM/PCM (see page 11-6), then recheck. If the symptom/indication goes away with a known-good ECM/PCM, replace the original ECM/PCM (see page 11-284). ■

DTC P0107: MAP Sensor Circuit Low Voltage (2005-2006 models)

1. Turn the ignition switch ON (II).

2. Check the MAP SENSOR in the DATA LIST with the HDS.

   Is about 3 kPa (1.0 in.Hg, 26 mmHg), or 0.23 V or less indicated?

   YES—Go to step 3.

   NO—Intermittent failure, system is OK at this time. Check for poor connections or loose terminals at the MAP sensor and the ECM/PCM. ■

3. Turn the ignition switch OFF.

4. Disconnect the MAP sensor 3P connector.

5. Turn the ignition switch ON (II).

6. Check the MAP SENSOR in the DATA LIST with the HDS.

   Is about 3 kPa (1.0 in.Hg, 26 mmHg), or 0.23 V or less indicated?

   YES—Go to step 9.

   NO—Go to step 7.

7. Measure voltage between MAP sensor 3P connector terminals No. 1 and No. 3.

MAP SENSOR 3P CONNECTOR

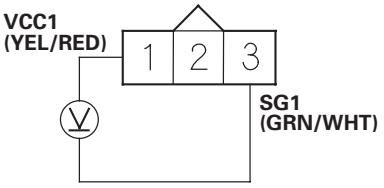

Wire side of female terminals

Is there about 5 V?

YES—Go to step 13.

NO—Go to step 8.

8. Measure voltage between ECM/PCM connector terminals A21 and A24.

ECM/PCM CONNECTOR A (31P)

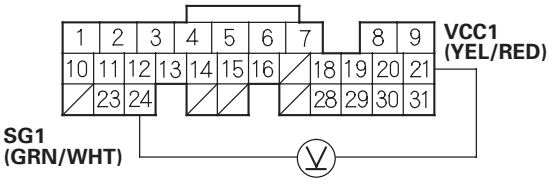

Wire side of female terminals

Is there about 5 V?

YES—Repair open in the wire between the ECM/PCM (A21) and the MAP sensor, then go to step 15.

NO—Go to step 20.

(cont'd)

DTC Troubleshooting (cont'd)

9. Turn the ignition switch OFF.

10. Jump the SCS line with the HDS.

11. Disconnect ECM/PCM connector A (31P).

12. Check for continuity between MAP sensor 3P connector terminal No. 2 and body ground.

MAP SENSOR 3P CONNECTOR

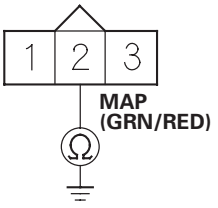

Wire side of female terminals

Is there continuity?

YES—Repair short in the wire between the ECM/PCM (A30) and the MAP sensor, then go to step 15.

NO—Go to step 20.

13. Turn the ignition switch OFF.

14. Replace the MAP sensor (see page 11-412).

15. Reconnect all connectors.

16. Turn the ignition switch ON (II).

17. Reset the ECM/PCM with the HDS.

18. Do the ECM/PCM idle learn procedure (see page 11-349).

19. Check for Temporary DTCs or DTCs with the HDS.

Are any Temporary DTCs or DTCs indicated?

YES—If DTC P0107 is indicated, check for poor connections or loose terminals at the MAP sensor and the ECM/PCM, then go to step 1. If any other Temporary DTCs or DTCs are indicated, go to the indicated DTC's troubleshooting.

NO—Troubleshooting is complete. ■

20. Update the ECM/PCM if it does not have the latest software, or substitute a known-good ECM/PCM (see page 11-6).

21. Check for Temporary DTCs or DTCs with the HDS.

Are any Temporary DTCs or DTCs indicated?

YES—If DTC P0107 is indicated, check for poor connections or loose terminals at the MAP sensor and the ECM/PCM, then go to step 1. If any other Temporary DTCs or DTCs are indicated, go to the indicated DTC's troubleshooting.

NO—If the ECM/PCM was updated, troubleshooting is complete. If the ECM/PCM was substituted, replace the original ECM/PCM (see page 11-284). ■

DTC P0108: MAP Sensor Circuit High Voltage (2002-2004 models)

1. Start the engine. Hold the engine speed at 3,000 rpm without load (in Park or neutral) until the radiator fan comes on, then let it idle.

2. Check the MAP with a scan tool or the HDS.

   Is more than 101 kPa (30 in.Hg, 760 mmHg), or more than 2.9 V indicated?

   YES—Go to step 3.

   NO—Intermittent failure, system is OK at this time. Check for poor connections or loose terminals at the MAP sensor and the ECM/PCM. ■

3. Turn the ignition switch OFF.

4. Disconnect the MAP sensor 3P connector.

5. Connect MAP sensor 3P connector terminals No. 2 and No. 3 with a jumper wire.

MAP SENSOR 3P CONNECTOR

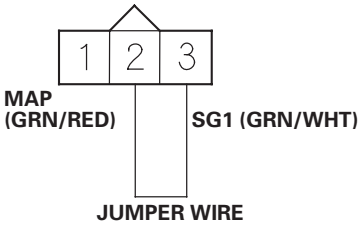

Wire side of female terminals

6. Turn the ignition switch ON (II).

7. Check the MAP with a scan tool or the HDS.

   Is more than 101 kPa (30 in.Hg, 760 mmHg), or more than 2.9 V indicated?

   YES—Go to step 8.

   NO—Replace the MAP sensor (see page 11-412). ■

8. Remove the jumper wire.

9. Measure voltage between MAP sensor 3P connector terminals No. 1 and No. 3.

MAP SENSOR 3P CONNECTOR

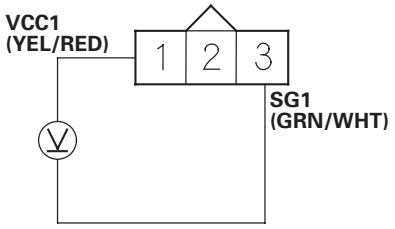

Wire side of female terminals

   Is there about 5 V?

   YES—Go to step 14.

   NO—Go to step 10.

10. Turn the ignition switch OFF.

11. Disconnect ECM/PCM connector A (31P).

12. Connect MAP sensor 3P connector terminal No. 3 to body ground with a jumper wire.

MAP SENSOR 3P CONNECTOR

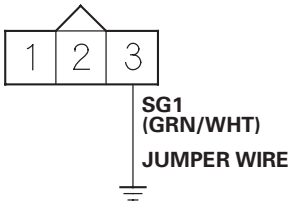

Wire side of female terminals

(cont'd)

DTC Troubleshooting (cont'd)

13. Check for continuity between ECM/PCM connector terminal A11 and body ground.

ECM/PCM CONNECTOR A (31P)

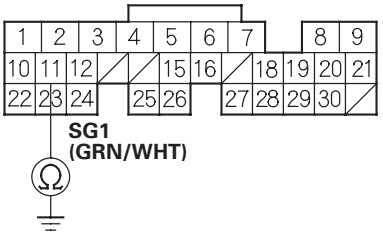

Wire side of female terminals

Is there continuity?

YES—Update the ECM/PCM if it does not have the latest software, or substitute a known-good ECM/PCM (see page 11-6), then recheck. If the symptom/indication goes away with a known-good ECM/PCM, replace the original ECM/PCM (see page 11-284). ■

NO—Repair open in the wire between the ECM/PCM (A11) and the MAP sensor. ■

14. Turn the ignition switch OFF.

15. Connect ECM/PCM connector terminals A11 and A19 with a jumper wire.

ECM/PCM CONNECTOR A (31P)

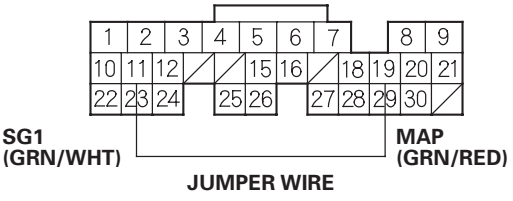

Wire side of female terminals

16. Turn the ignition switch ON (II).

17. Check the MAP with a scan tool or the HDS.

Is more than 101 kPa (30 in.Hg, 760 mmHg), or more than 2.9 V indicated?

YES—Update the ECM/PCM if it does not have the latest software, or substitute a known-good ECM/PCM (see page 11-6), then recheck. If the symptom/indication goes away with a known-good ECM/PCM, replace the original ECM/PCM (see page 11-284). ■

NO—Repair open in the wire between the ECM/PCM (A19) and the MAP sensor. ■

DTC P0108: MAP Sensor Circuit High Voltage (2005-2006 models)

1. Turn the ignition switch ON (II).

2. Check the MAP SENSOR in the DATA LIST with the HDS.

   Is 160 kPa (47.1 in.Hg, 1,197 mmHg), 4.49 V or more indicated?

   YES—Go to step 3.

   NO—Intermittent failure, system is OK at this time. Check for poor connections or loose terminals at the MAP sensor and the ECM/PCM. ■

3. Turn the ignition switch OFF.

4. Disconnect the MAP sensor 3P connector.

5. Connect MAP sensor 3P connector terminals No. 2 and No. 3 with a jumper wire.

MAP SENSOR 3P CONNECTOR

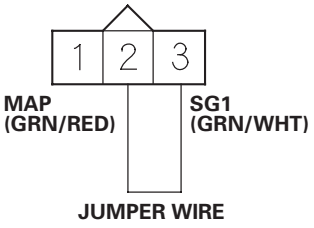

Wire side of female terminals

6. Turn the ignition switch ON (II).

7. Check the MAP SENSOR in the DATA LIST with the HDS.

   Is 160 kPa (47.1 in.Hg, 1,197 mmHg), 4.49 V or more indicated?

   YES—Go to step 8.

   NO—Go to step 19.

8. Remove the jumper wire from the MAP sensor 3P connector.

9. Measure voltage between MAP sensor 3P connector terminals No. 1 and No. 3.

MAP SENSOR 3P CONNECTOR

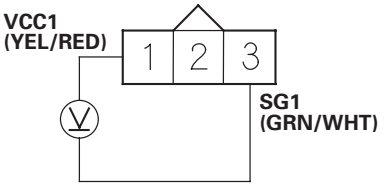

Wire side of female terminals

   Is there about 5 V?

   YES—Go to step 15.

   NO—Go to step 10.

10. Turn the ignition switch OFF.

11. Jump the SCS line with the HDS.

12. Disconnect ECM/PCM connector A (31P).

13. Connect MAP sensor 3P connector terminal No. 3 to body ground with a jumper wire.

MAP SENSOR 3P CONNECTOR

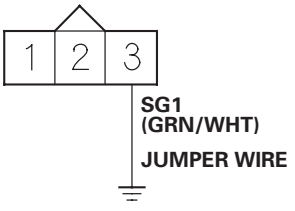

Wire side of female terminals

(cont'd)

DTC Troubleshooting (cont'd)

14. Check for continuity between ECM/PCM connector terminal A24 and body ground.

ECM/PCM CONNECTOR A (31P)

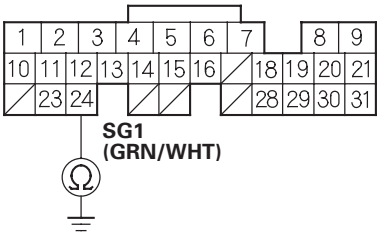

Wire side of female terminals

Is there continuity?

YES—Go to step 26.

NO—Repair open in the wire between the ECM/PCM (A24) and the MAP sensor, then go to step 21.

15. Turn the ignition switch OFF.

16. Connect ECM/PCM connector terminals A24 and A30 with a jumper wire.

ECM/PCM CONNECTOR A (31P)

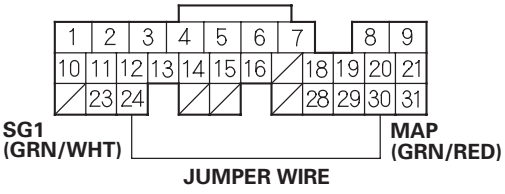

Wire side of female terminals

17. Turn the ignition switch ON (II).

18. Check the MAP SENSOR in the DATA LIST with the HDS.

Is 160 kPa (47.1 in.Hg, 1,197 mmHg), 4.49 V or more indicated?

YES—Go to step 26.

NO—Repair open in the wire between the ECM/PCM (A30) and the MAP sensor, then go to step 22.

19. Turn the ignition switch OFF.

20. Replace the MAP sensor (see page 11-412).

21. Reconnect all connectors.

22. Turn the ignition switch ON (II).

23. Reset the ECM/PCM with the HDS.

24. Do the ECM/PCM idle learn procedure (see page 11-349).

25. Check for Temporary DTCs or DTCs with HDS.

Are any Temporary DTCs or DTCs indicated?

YES—If DTC P0108 is indicated, check for poor connections or loose terminals at the MAP sensor and the ECM/PCM, then go to step 1. If any other Temporary DTCs or DTCs are indicated, go to the indicated DTC's troubleshooting.

NO—Troubleshooting is complete. ■

26. Update the ECM/PCM if it does not have the latest software, or substitute a known-good ECM (see page 11-6).

27. Check for Temporary DTCs or DTCs with the HDS.

    Are any Temporary DTCs or DTCs indicated?

    YES—If DTC P0108 is indicated, check for poor connections or loose terminals at the MAP sensor and the ECM/PCM, then go to step 1. If any other Temporary DTCs or DTCs are indicated, go to the indicated DTC's troubleshooting.

    NO—If the ECM/PCM was updated, troubleshooting is complete. If the ECM/PCM was substituted, replace the original ECM/PCM (see page 11-284). ■

DTC Troubleshooting (cont'd)

DTC P0111: IAT Sensor Circuit Range/ Performance Problem (2005-2006 models)

DTC P1116: ECT Sensor Circuit Range/ Performance Problem (2005-2006 models)

1. Check for poor connections or loose terminals at the ECT sensor and the IAT sensor.

   Are the connections and terminals OK?

   YES—Go to step 2.

   NO—Repair the connectors or terminals, then go to step 25.

2. Start the engine, and let it idle for 10 minutes.

3. Check the ECT SENSOR in the DATA LIST with the HDS.

   Is about 129 °F (54 °C) or less, or 1.54 V or more indicated?

   YES—Replace the ECT sensor (see page 11-280), then go to step 25.

   NO—Go to step 4.

4. Turn the ignition switch OFF.

5. Remove the IAT sensor (see page 11-281).

6. Allow the IAT sensor to cool to 77 °F (25 °C).

7. Note the ambient temperature.

8. Connect the IAT sensor to the 2P connector. Do not install the sensor on the air intake duct.

9. Turn the ignition switch ON (II).

10. Note the value of the IAT SENSOR quickly in the DATA LIST with the HDS.

11. Compare the IAT SENSOR and the ambient temperature.

    Does the IAT SENSOR differ 5.4 °F (3 °C) or more?

    YES—Replace the IAT sensor (see page 11-281), then go to step 25.

    NO—Go to step 12.

12. Disconnect the IAT sensor from the 2P connector.

13. Using a heat gun, blow hot air on the IAT sensor for a few seconds. Do not apply the heat longer than a few seconds or you will damage the sensor.

14. Connect the IAT sensor to the 2P connector. Do not install the sensor on the air intake duct.

15. Check the IAT SENSOR in the DATA LIST with the HDS.

    Does the IAT SENSOR change 82 °F (28 °C) or more?

    YES—Go to step 16.

    NO—Replace the IAT sensor (see page 11-281), then go to step 25.

16. Turn the ignition switch OFF.

17. Drain the coolant (see page 10-6).

18. Remove the ECT sensor (see page 11-280).

19. Allow the ECT sensor to cool to 77 °F (25 °C).

20. Note the ambient temperature.

21. Connect the ECT sensor to the 2P connector. Do not install the sensor on the engine.

22. Turn the ignition switch ON (II).

23. Note the value of ECT SENSOR quickly in the DATA LIST with the HDS.

24. Compare the ECT SENSOR and the ambient temperature.

    Does the ECT SENSOR differ 5.4 °F (3 °C) or more?

    YES—Replace the ECT sensor (see page 11-280), then go to step 25.

    NO—Intermittent failure, system is OK at this time. Check for poor connections or loose terminals at the ECT sensor and the ECM/PCM. ■

25. Turn the ignition switch ON (II).

26. Reset the ECM/PCM with the HDS.

27. Do the ECM/PCM idle learn procedure (see page 11-349).

28. Check for Temporary DTCs or DTCs with the HDS.

    Are any Temporary DTCs or DTCs indicated?

    YES—If DTC P0111 and/or P1116 is indicated, check for poor connections or loose terminals at the ECT sensor, or the IAT sensor and the ECM/PCM, then go to step 1. If any other Temporary DTCs or DTCs are indicated, go to the indicated DTC's troubleshooting.

    NO—Troubleshooting is complete. ■

DTC Troubleshooting (cont'd)

DTC P0112: IAT Sensor Circuit Low Voltage (2002-2004 models)

1. Turn the ignition switch ON (II).
2. Check the IAT with a scan tool or the HDS.

   Is 302 °F (150 °C) or higher, or 0 V indicated?

   YES—Go to step 3.

   NO—Go to step 10.
3. Turn the ignition switch OFF.
4. Disconnect the IAT sensor 2P connector.
5. Turn the ignition switch ON (II).
6. Check the IAT with a scan tool or the HDS.

   Is 302 °F (150 °C) or higher, or 0 V indicated?

   YES—Go to step 7.

   NO—Replace the IAT sensor (see page 11-281). ■
7. Turn the ignition switch OFF.
8. Disconnect ECM/PCM connector B (24P).
9. Check for continuity between IAT sensor 2P connector terminal No. 2 and body ground.

IAT SENSOR 2P CONNECTOR

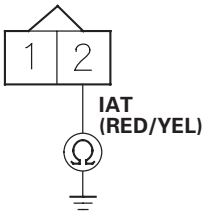

Wire side of female terminals

Is there continuity?

YES—Repair short in the wire between the ECM/PCM (B17) and the IAT sensor. ■

NO—Update the ECM/PCM if it does not have the latest software, or substitute a known-good ECM/PCM (see page 11-6), then recheck. If the symptom/indication goes away with a known-good ECM/PCM, replace the original ECM/PCM (see page 11-284). ■

10. Check the temperature reading on a scan tool or the HDS. Be aware that if the engine is warm, the reading will be higher than ambient temperature. If the engine is cold, the IAT and ECT will have the same value.

    Is the correct ambient temperature indicated?

    YES—Intermittent failure, system is OK at this time. Check for poor connections or loose terminals at the IAT sensor and the ECM/PCM. ■

    NO—Replace the IAT sensor (see page 11-281). ■

DTC P0112: IAT Sensor Circuit Low Voltage (2005-2006 models)

1. Turn the ignition switch ON (II).

2. Check the IAT SENSOR in the DATA LIST with the HDS.

   Is about 356 °F (180 °C) or higher, or 0.08 V or less indicated?

   YES—Go to step 3.

   NO—Intermittent failure, system is OK at this time. Check for poor connections or loose terminals at the IAT sensor and the ECM/PCM. ■

3. Turn the ignition switch OFF.

4. Disconnect the IAT sensor 2P connector.

5. Turn the ignition switch ON (II).

6. Check the IAT SENSOR in the DATA LIST with the HDS.

   Is about 356 °F (180 °C) or higher, or 0.08 V or less indicated?

   YES—Go to step 7.

   NO—Go to step 11.

7. Turn the ignition switch OFF.

8. Jump the SCS line with the HDS.

9. Disconnect ECM/PCM connector B (24P).

10. Check for continuity between IAT sensor 2P connector terminal No. 2 and body ground.

IAT SENSOR 2P CONNECTOR

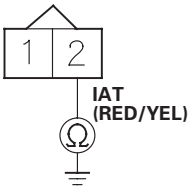

Wire side of female terminals

   Is there continuity?

   YES—Repair short in the wire between the IAT sensor and the ECM/PCM (B17), then go to step 13.

   NO—Go to step 18.

11. Turn the ignition switch OFF.

12. Replace the IAT sensor (see page 11-281).

13. Reconnect all connectors.

14. Turn the ignition switch ON (II).

15. Reset the ECM/PCM with the HDS.

16. Do the ECM/PCM idle learn procedure (see page 11-349).

17. Check for Temporary DTCs or DTCs with the HDS.

    Are any Temporary DTCs or DTCs indicated?

    YES—If DTC P0112 is indicated, check for poor connections or loose terminals at the IAT sensor and the ECM/PCM, then go to step 1. If any other Temporary DTCs or DTCs are indicated, go to the indicated DTC's troubleshooting.

    NO—Troubleshooting is complete. ■

18. Update the ECM/PCM if it does not have the latest software, or substitute a known-good ECM/PCM (see page 11-6).

19. Check for Temporary DTCs or DTCs with the HDS.

    Are any Temporary DTCs or DTCs indicated?

    YES—If DTC P0112 is indicated, check for poor connections or loose terminals at the IAT sensor and the ECM/PCM, then go to step 1. If any other Temporary DTCs or DTCs are indicated, go to the indicated DTC's troubleshooting.

    NO—If the ECM/PCM was updated, troubleshooting is complete. If the ECM/PCM was substituted, replace the original ECM/PCM (see page 11-284). ■

DTC Troubleshooting (cont'd)

DTC P0113: IAT Sensor Circuit High Voltage (2002-2004 models)

1. Turn the ignition switch ON (II).
2. Check the IAT with a scan tool or the HDS.

   Is −4 °F (−20 °C) or less, or 5 V indicated?

   YES—Go to step 3.

   NO—Intermittent failure, system is OK at this time. Check for poor connections or loose terminals at the IAT sensor and the ECM/PCM. ■
3. Turn the ignition switch OFF.
4. Disconnect the IAT sensor 2P connector.
5. Connect IAT sensor 2P connector terminals No. 1 and No. 2 with a jumper wire.

IAT SENSOR 2P CONNECTOR

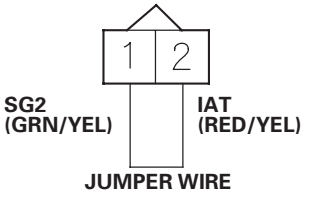

Wire side of female terminals

6. Turn the ignition switch ON (II).
7. Check the IAT with a scan tool or the HDS.

   Is −4 °F (−20 °C) or less, or 5 V indicated?

   YES—Go to step 8.

   NO—Replace the IAT sensor (see page 11-281). ■
8. Turn the ignition switch OFF.
9. Remove the jumper wire.
10. Turn the ignition switch ON (II).
11. Measure voltage between IAT sensor 2P connector terminal No. 2 and body ground.

IAT SENSOR 2P CONNECTOR

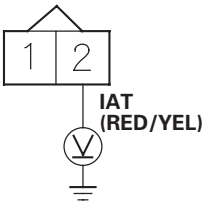

Wire side of female terminals

Is there about 5 V?

YES—Go to step 12.

NO—Go to step 15.

12. Turn the ignition switch OFF.

13. Connect IAT sensor 2P connector terminal No. 1 to body ground with a jumper wire.

IAT SENSOR 2P CONNECTOR

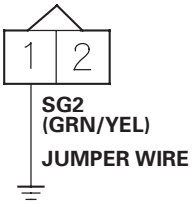

Wire side of female terminals

14. Check for continuity between ECM/PCM connector terminal A10 and body ground.

ECM CONNECTOR A (31P)

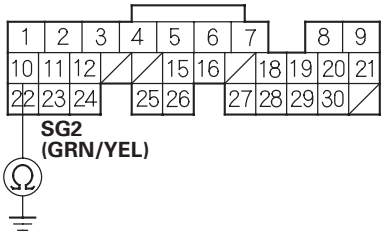

Wire side of female terminals

Is there continuity?

YES—Update the ECM/PCM if it does not have the latest software, or substitute a known-good ECM/PCM (see page 11-6), then recheck. If the symptom/indication goes away with a known-good ECM/PCM, replace the original ECM/PCM (see page 11-284). ■

NO—Repair open in the wire between the ECM/PCM (A10) and the IAT sensor. ■

15. Measure voltage between ECM/PCM connector terminal B17 and body ground.

ECM CONNECTOR B (24P)

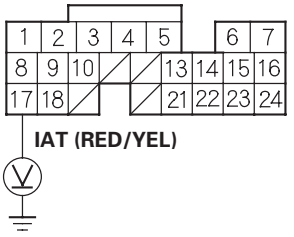

Wire side of female terminals

Is there about 5 V?

YES—Repair open in the wire between the ECM/PCM (B17) and the IAT sensor. ■

NO—Update the ECM/PCM if it does not have the latest software, or substitute a known-good ECM/PCM (see page 11-6), then recheck. If the symptom/indication goes away with a known-good ECM/PCM, replace the original ECM/PCM (see page 11-284). ■

DTC Troubleshooting (cont'd)

DTC P0113: IAT Sensor Circuit High Voltage (2005-2006 models)

1. Turn the ignition switch ON (II).
2. Check the IAT SENSOR in the DATA LIST with the HDS.

   Is about −40 °F (−40 °C) or less, or 4.92 V or more indicated?

   YES—Go to step 3.

   NO—Intermittent failure, system is OK at this time. Check for poor connections or loose terminals at the IAT sensor and the ECM/PCM. ■
3. Turn the ignition switch OFF.
4. Disconnect the IAT sensor 2P connector.
5. Connect IAT sensor 2P connector terminals No. 1 and No. 2 with a jumper wire.

IAT SENSOR 2P CONNECTOR

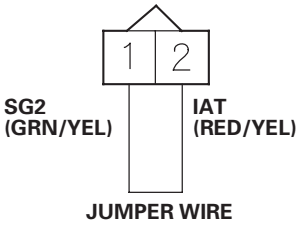

Wire side of female terminals

6. Turn the ignition switch ON (II).
7. Check the IAT SENSOR in the DATA LIST with the HDS.

   Is about −40 °F (−40 °C) or less, or 4.92 V or more indicated?

   YES—Go to step 8.

   NO—Go to step 18.
8. Turn the ignition switch OFF.
9. Remove the jumper wire from the IAT sensor 2P connector.
10. Turn the ignition switch ON (II).
11. Measure voltage between IAT sensor 2P connector terminal No. 2 and body ground.

IAT SENSOR 2P CONNECTOR

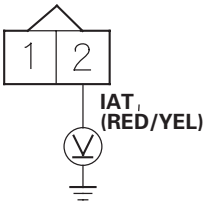

Wire side of female terminals

Is there about 5 V?

YES—Go to step 12.

NO—Go to step 17.

12. Turn the ignition switch OFF.
13. Jump the SCS line with the HDS.
14. Disconnect ECM/PCM connector A (31P).
15. Connect IAT sensor 2P connector terminal No. 1 to body ground with a jumper wire.

IAT SENSOR 2P CONNECTOR

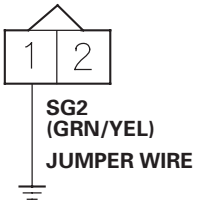

Wire side of female terminals

16. Check for continuity between ECM/PCM connector terminal A23 and body ground.

ECM/PCM CONNECTOR A (31P)

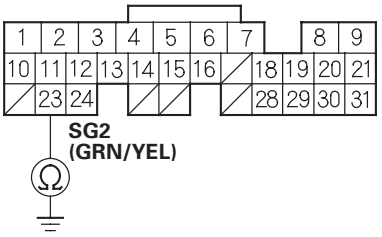

Wire side of female terminals

Is there continuity?

YES—Go to step 25.

NO—Repair open in the wire between the ECM/PCM (A23) and the IAT sensor, then go to step 20.

17. Measure voltage between ECM/PCM connector terminal B17 and body ground.

ECM/PCM CONNECTOR B (24P)

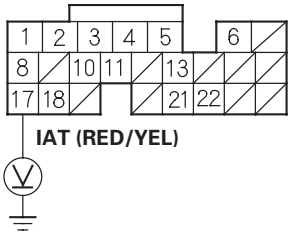

Wire side of female terminals

Is there about 5 V?

YES—Repair open in the wire between the ECM/PCM (B17) and the IAT sensor, then go to step 20.

NO—Go to step 25.

18. Turn the ignition switch OFF.

19. Replace the IAT sensor (see page 11-281).

20. Reconnect all connectors.

21. Turn the ignition switch ON (II).

22. Reset the ECM/PCM with the HDS.

23. Do the ECM/PCM idle learn procedure (see page 11-349).

24. Check for Temporary DTCs or DTCs with the HDS.

Are any Temporary DTCs or DTCs indicated?

YES—If DTC P0113 is indicated, check for poor connections or loose terminals at the IAT sensor and the ECM/PCM, then go to step 1. If any other Temporary DTCs or DTCs are indicated, go to the indicated DTC's troubleshooting.

NO—Troubleshooting is complete. ■

25. Update the ECM/PCM if it does not have the latest software, or substitute a known-good ECM/PCM (see page 11-6).

26. Check for Temporary DTCs or DTCs with the HDS.

Are any Temporary DTCs or DTCs indicated?

YES—If DTC P0113 is indicated, check for poor connections or loose terminals at the IAT sensor and the ECM/PCM, then go to step 1. If any other Temporary DTCs or DTCs are indicated, go to the indicated DTC's troubleshooting.

NO—If the ECM/PCM was updated, troubleshooting is complete. If the ECM/PCM was substituted, replace the original ECM/PCM (see page 11-284). ■

DTC Troubleshooting (cont'd)

DTC P0116: ECT Sensor Circuit Range/ Performance Problem (2002-2004 models)

NOTE: If DTC P0117 and/or P0118 are stored at the same time as DTC P0116, troubleshoot those DTCs first, then recheck for DTC P0116.

1. Turn the ignition switch ON (II).
2. Check the ECT with a scan tool or the HDS.

   Is about 176 °F (80 °C) or higher, or 0.86 V or less indicated?

   YES—Go to step 3.

   NO—Go to step 7.
3. Note the coolant temperature from step 2.
4. Turn the ignition switch OFF.
5. Cool the engine for 1 hour.
6. Check the ECT with a scan tool or the HDS.

   Did the ECT change 3.6 °F (2 °C) or more?

   YES—Intermittent failure, system is OK at this time. Check the thermostat and the cooling system. ■

   NO—Replace the ECT sensor (see page 11-280). ■
7. Note the coolant temperature from step 2.
8. Start the engine. Hold the engine speed at 3,000 rpm without load (in Park or neutral) until the radiator fan comes on, then let it idle.
9. Check the ECT with a scan tool or the HDS.

   Does the ECT change 3.6 °F (2 °C) or more?

   YES—Intermittent failure, system is OK at this time. Check the thermostat and the cooling system. ■

   NO—Replace the ECT sensor (see page 11-280). ■

DTC P0116: ECT Sensor Circuit Range/ Performance Problem (2005-2006 models)

1. Turn the ignition switch ON (II).

2. Check the ECT SENSOR in the DATA LIST with the HDS.

   Is about 176 °F (80 °C) or higher, or 0.78 V or less indicated?

   YES—Go to step 6.

   NO—Go to step 3.

3. Note the value of the ECT SENSOR in the DATA LIST with the HDS.

4. Start the engine. Hold the engine speed at 3,000 rpm without load (in Park or neutral) until the radiator fan comes on, then let it idle.

5. Check the ECT SENSOR in the DATA LIST with the HDS.

   Does the ECT SENSOR change 18 °F (10 °C) or more?

   YES—Intermittent failure, system is OK at this time. Check for poor connections or loose terminals at the ECT sensor and the ECM/PCM. ■

   NO—Go to step 11.

6. Note the value of the ECT SENSOR in the DATA LIST with the HDS.

7. Turn the ignition switch OFF.

8. Open the engine hood, and let the engine cool for 3 hours.

9. Turn the ignition switch ON (II).

10. Check the ECT SENSOR in the DATA LIST with the HDS.

    Does the ECT SENSOR change 18 °F (10 °C) or more?

    YES—Intermittent failure, system is OK at this time. Check for poor connections or loose terminals at the ECT sensor and the ECM/PCM. ■

    NO—Go to step 11.

11. Turn the ignition switch OFF.

12. Replace the ECT sensor (see page 11-280).

13. Turn the ignition switch ON (II).

14. Reset the ECM/PCM with the HDS.

15. Do the ECM/PCM idle learn procedure (see page 11-349).

16. Check for Temporary DTCs or DTCs with the HDS.

    Are any Temporary DTCs or DTCs indicated?

    YES—If DTC P0116 is indicated, check for poor connections or loose terminals at the ECT sensor and the ECM/PCM, then go to step 1. If any other Temporary DTCs or DTCs are indicated, go to the indicated DTC's troubleshooting.

    NO—Troubleshooting is complete. ■

DTC Troubleshooting (cont'd)

DTC P0117: ECT Sensor Circuit Low Voltage (2002-2004 models)

1. Turn the ignition switch ON (II).
2. Check the ECT with a scan tool or the HDS.

   Is 302 °F (150 °C) or higher, or 0 V indicated?

   YES—Go to step 3.

   NO—Intermittent failure, system is OK at this time. Check for poor connections or loose terminals at the ECT sensor and the ECM/PCM. ■
3. Disconnect the ECT sensor 2P connector.
4. Check the ECT with a scan tool or the HDS.

   Is 302 °F (150 °C) or higher, or 0 V indicated?

   YES—Go to step 5.

   NO—Replace the ECT sensor (see page 11-280). ■
5. Turn the ignition switch OFF.
6. Disconnect ECM/PCM connector B (24P).
7. Check for continuity between ECT sensor 2P connector terminal No. 1 and body ground.

ECT SENSOR 2P CONNECTOR

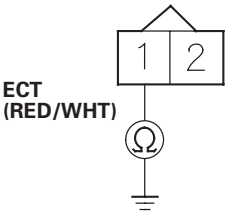

Wire side of female terminals

Is there continuity?

YES—Repair short in the wire between the ECM/PCM (B8) and the ECT sensor. ■

NO—Update the ECM/PCM if it does not have the latest software, or substitute a known-good ECM/PCM (see page 11-6), then recheck. If the symptom/indication goes away with a known-good ECM/PCM, replace the original ECM/PCM (see page 11-284). ■

DTC P0117: ECT Sensor Circuit Low Voltage (2005-2006 models)

1. Turn the ignition switch ON (II).

2. Check the ECT SENSOR in the DATA LIST with the HDS.

   Is about 356 °F (180 °C) or higher, or 0.08 V or less indicated?

   YES—Go to step 3.

   NO—Intermittent failure, system is OK at this time. Check for poor connections or loose terminals at the ECT sensor and the ECM/PCM. ■

3. Turn the ignition switch OFF.

4. Disconnect the ECT sensor 2P connector.

5. Turn the ignition switch ON (II).

6. Check the ECT SENSOR in the DATA LIST with the HDS.

   Is about 356 °F (180 °C) or higher, or 0.08 V or less indicated?

   YES—Go to step 7.

   NO—Go to step 11.

7. Turn the ignition switch OFF.

8. Jump the SCS line with the HDS.

9. Disconnect ECM/PCM connector B (24P).

10. Check for continuity between ECT sensor 2P connector terminal No. 1 and body ground.

ECT SENSOR 2P CONNECTOR

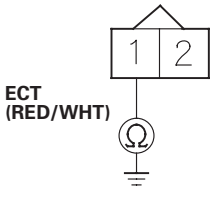

Wire side of female terminals

   Is there continuity?

   YES—Repair short in the wire between the ECT sensor and the ECM/PCM (B8), then go to step 13.

   NO—Go to step 18.

11. Turn the ignition switch OFF.

12. Replace the ECT sensor (see page 11-280).

13. Reconnect all connectors.

14. Turn the ignition switch ON (II).

15. Reset the ECM/PCM with the HDS.

16. Do the ECM/PCM idle learn procedure (see page 11-349).

17. Check for Temporary DTCs or DTCs with the HDS.

    Are any Temporary DTCs or DTCs indicated?

    YES—If DTC P0117 is indicated, check for poor connections or loose terminals at the ECT sensor and the ECM/PCM, then go to step 1. If any other Temporary DTCs or DTCs are indicated, go to the indicated DTC's troubleshooting.

    NO—Troubleshooting is complete. ■

18. Update the ECM/PCM if it does not have the latest software, or substitute a known-good ECM/PCM (see page 11-6).

19. Check for Temporary DTCs or DTCs with the HDS.

    Are any Temporary DTCs or DTCs indicated?

    YES—If DTC P0117 is indicated, check for poor connections or loose terminals at the ECT sensor and the ECM/PCM, then go to step 1. If any other Temporary DTCs or DTCs are indicated, go to the indicated DTC's troubleshooting.

    NO—If the ECM/PCM was updated, troubleshooting is complete. If the ECM/PCM was substituted, replace the original ECM/PCM (see page 11-284). ■

DTC Troubleshooting (cont'd)

DTC P0118: ECT Sensor Circuit High Voltage (2002-2004 models)

1. Turn the ignition switch ON (II).
2. Check the ECT with a scan tool or the HDS.

   Is −4 °F (−20 °C) or less, or 5 V indicated?

   YES—Go to step 3.

   NO—Intermittent failure, system is OK at this time. Check for poor connections or loose terminals at the ECT sensor and the ECM/PCM. ■
3. Turn the ignition switch OFF.
4. Disconnect the ECT sensor 2P connector.
5. Connect ECT sensor 2P connector terminals No. 1 and No. 2 with a jumper wire.

ECT SENSOR 2P CONNECTOR

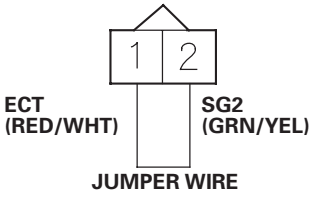

Wire side of female terminals

6. Turn the ignition switch ON (II).
7. Check the ECT with a scan tool or the HDS.

   Is −4 °F (−20 °C) or less, or 5 V indicated?

   YES—Go to step 8.

   NO—Replace the ECT sensor (see page 11-280). ■
8. Turn the ignition switch OFF.
9. Remove the jumper wire.
10. Turn the ignition switch ON (II).
11. Measure voltage between ECT sensor 2P connector terminal No. 1 and body ground.

ECT SENSOR 2P CONNECTOR

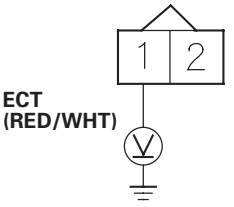

Wire side of female terminals

Is there about 5 V?

YES—Go to step 12.

NO—Go to step 14.

12. Connect ECT sensor 2P connector terminal No. 2 to body ground with a jumper wire.

ECT SENSOR 2P CONNECTOR

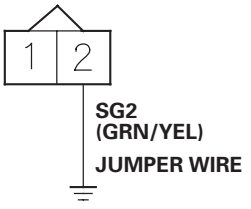

Wire side of female terminals

13. Check for continuity between ECM/PCM connector terminal A10 and body ground.

ECM/PCM CONNECTOR A (31P)

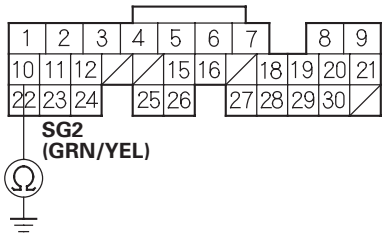

Wire side of female terminals

Is there continuity?

YES—Update the ECM/PCM if it does not have the latest software, or substitute a known-good ECM/PCM (see page 11-6), then recheck. If the symptom/indication goes away with a known-good ECM/PCM, replace the original ECM/PCM (see page 11-284). ■

NO—Repair open in the wire between the ECM/PCM (A10) and the ECT sensor. ■

14. Measure voltage between ECM/PCM connector terminal B8 and body ground.

ECM/PCM CONNECTOR B (24P)

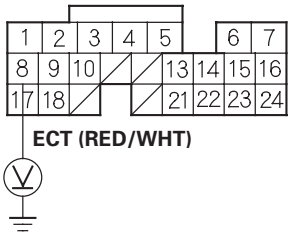

Wire side of female terminals

Is there about 5 V?

YES—Repair open in the wire between the ECM/PCM (B8) and the ECT sensor. ■

NO—Update the ECM/PCM if it does not have the latest software, or substitute a known-good ECM/PCM (see page 11-6), then recheck. If the symptom/indication goes away with a known-good ECM/PCM, replace the original ECM/PCM (see page 11-284). ■

DTC Troubleshooting (cont'd)

DTC P0118: ECT Sensor Circuit High Voltage (2005-2006 models)

1. Turn the ignition switch ON (II).
2. Check the ECT SENSOR in the DATA LIST with the HDS.

   Is about −40 °F (−40 °C) or less, or 4.90 V or more indicated?

   YES—Go to step 3.

   NO—Intermittent failure, system is OK at this time. Check for poor connections or loose terminals at the ECT sensor and the ECM/PCM. ■
3. Turn the ignition switch OFF.
4. Disconnect the ECT sensor 2P connector.
5. Connect ECT sensor 2P connector terminals No. 1 and No. 2 with a jumper wire.

ECT SENSOR 2P CONNECTOR

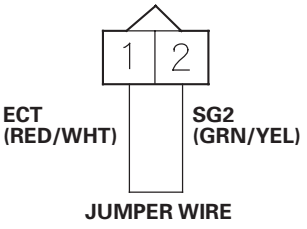

Wire side of female terminals

6. Turn the ignition switch ON (II).
7. Check the ECT SENSOR in the DATA LIST with the HDS.

   Is about −40 °F (−40 °C) or less, or 4.90 V or more indicated?

   YES—Go to step 8.

   NO—Go to step 18.
8. Turn the ignition switch OFF.
9. Remove the jumper wire from the ECT sensor 2P connector.
10. Turn the ignition switch ON (II).
11. Measure voltage between ECT sensor 2P connector terminal No. 1 and body ground.

ECT SENSOR 2P CONNECTOR

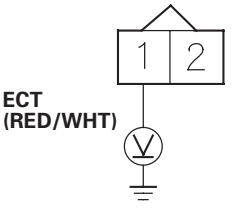

Wire side of female terminals

Is there about 5 V?

YES—Go to step 12.

NO—Go to step 17.

12. Turn the ignition switch OFF.
13. Jump the SCS line with the HDS.
14. Disconnect ECM/PCM connector A (31P).
15. Connect ECT sensor 2P connector terminal No. 2 to body ground with a jumper wire.

ECT SENSOR 2P CONNECTOR

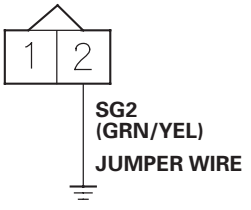

Wire side of female terminals

16. Check for continuity between ECM/PCM connector terminal A23 and body ground.

ECM/PCM CONNECTOR A (31P)

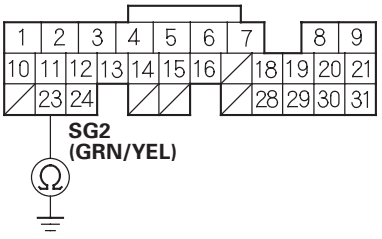

Wire side of female terminals

Is there continuity?

YES—Go to step 25.

NO—Repair open in the wire between the ECM/PCM (A23) and the ECT sensor, then go to step 20.

17. Measure voltage between ECM/PCM connector terminal B8 and body ground.

ECM/PCM CONNECTOR B (24P)

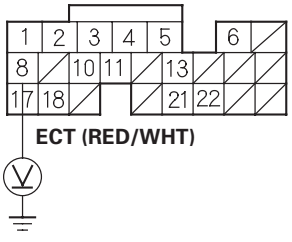

Wire side of female terminals

Is there about 5 V?

YES—Repair open in the wire between the ECM/PCM (B8) and the ECT sensor, then go to step 20.

NO—Go to step 25.

18. Turn the ignition switch OFF.

19. Replace the ECT sensor (see page 11-280).

20. Reconnect all connectors.

21. Turn the ignition switch ON (II).

22. Reset the ECM/PCM with the HDS.

23. Do the ECM/PCM idle learn procedure (see page 11-349).

24. Check for Temporary DTCs or DTCs with the HDS.

Are any Temporary DTCs or DTCs indicated?

YES—If DTC P0118 is indicated, check for poor connections or loose terminals at the ECT sensor and the ECM/PCM, then go to step 1. If any other Temporary DTCs or DTCs are indicated, go to the indicated DTC's troubleshooting.

NO—Troubleshooting is complete. ■

25. Update the ECM/PCM if it does not have the latest software, or substitute a known-good ECM/PCM (see page 11-6).

26. Check for Temporary DTCs or DTCs with the HDS.

Are any Temporary DTCs or DTCs indicated?

YES—If DTC P0118 is indicated, check for poor connections or loose terminals at the ECT sensor and the ECM/PCM, then go to step 1. If any other Temporary DTCs or DTCs are indicated, go to the indicated DTC's troubleshooting.

NO—If the ECM/PCM was updated, troubleshooting is complete. If the ECM/PCM was substituted, replace the original ECM/PCM (see page 11-284). ■

DTC Troubleshooting (cont'd)

DTC P0122: TP Sensor Circuit Low Voltage (2002-2004 models)

NOTE: Information marked with an asterisk (*) applies to K20A2 engine.

1. Turn the ignition switch ON (II).

2. Check the throttle position with a scan tool or the HDS.

   Is there about 10 % or 0.5 V when the throttle is fully closed and about 90 % or 4.5 V when the throttle is fully opened?

   YES—Intermittent failure, system is OK at this time. Check for poor connections or loose terminals at the TP sensor and the ECM/PCM. ■

   NO—Go to step 3.

3. Turn the ignition switch OFF.

4. Disconnect the TP sensor 3P connector.

5. Turn the ignition switch ON (II).

6. Measure voltage between TP sensor 3P connector terminals No. 1 and No. 3.

TP SENSOR 3P CONNECTOR

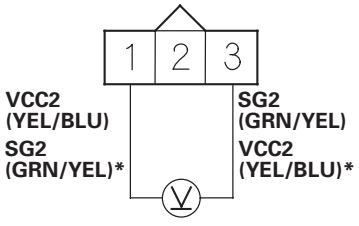

Wire side of female terminals

Is there about 5 V?

YES—Go to step 7.

NO—Go to step 14.

7. Turn the ignition switch OFF.

8. At the sensor side, measure resistance between TP sensor 3P connector terminals No. 2 (No. 1)* and No. 3 (No. 2)* with the throttle fully closed.

TP SENSOR 3P CONNECTOR

K20A3 engine:

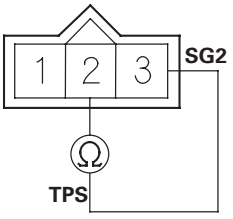

K20A2 engine:

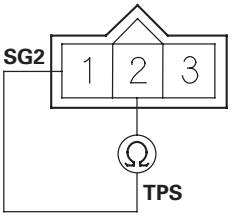

Terminal side of male terminals

Is there about 0.5—0.9 kΩ?

YES—Go to step 9.

NO—Replace the throttle body, K20A2 engine (see page 11-410), K20A3 engine (see page 11-411). ■

9. Measure resistance between TP sensor 3P connector terminals No. 1 (No. 2)* and No. 2 (No. 3)* with the throttle fully closed.

TP SENSOR 3P CONNECTOR

K20A3 engine:

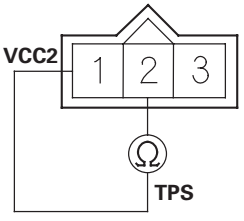

K20A2 engine:

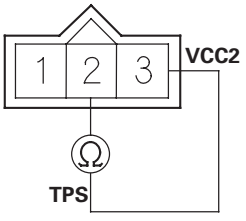

Terminal side of male terminals

Is there about 4.5 kΩ?

YES—Go to step 10.

NO—Replace the throttle body, K20A2 engine (see page 11-410), K20A3 engine (see page 11-411). ■

10. Disconnect ECM/PCM connector A (31P).

11. At the wire harness side, check for continuity between TP sensor 3P connector terminal No. 2 and body ground.

TP SENSOR 3P CONNECTOR

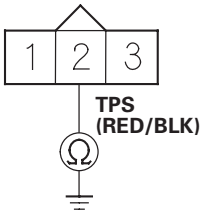

Wire side of female terminals

Is there continuity?

YES—Repair short in the wire between the ECM/PCM (A15) and the TP sensor. ■

NO—Go to step 12.

12. Connect ECM/PCM connector terminal A15 to body ground with a jumper wire.

ECM/PCM CONNECTOR A (31P)

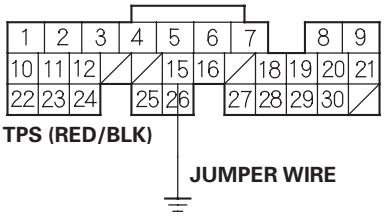

Wire side of female terminals

13. At the wire harness side, check for continuity between TP sensor 3P connector terminal No. 2 and body ground.

TP SENSOR 3P CONNECTOR

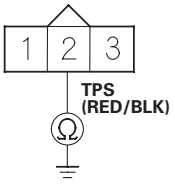

Wire side of female terminals

Is there continuity?

YES—Update the ECM/PCM if it does not have the latest software, or substitute a known-good ECM/PCM (see page 11-6), then recheck. If the symptom/indication goes away with a known-good ECM/PCM, replace the original ECM/PCM (see page 11-284). ■

NO—Repair open in the wire between the ECM/PCM (A15) and the TP sensor. ■

14. Measure voltage between ECM/PCM connector terminals A10 and A20.

ECM/PCM CONNECTOR A (31P)

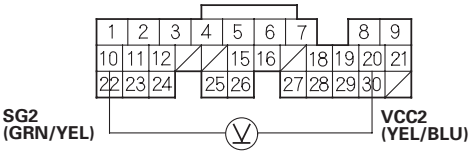

Wire side of female terminals

Is there about 5 V?

YES—Repair open in the wire between the ECM/PCM (A20) and the TP sensor. ■

NO—Update the ECM/PCM if it does not have the latest software, or substitute a known-good ECM/PCM (see page 11-6), then recheck. If the symptom/indication goes away with a known-good ECM/PCM, replace the original ECM/PCM (see page 11-284). ■

DTC Troubleshooting (cont'd)

DTC P0122: TP Sensor Circuit Low Voltage (2005-2006 models)

NOTE: Information marked with an asterisk (*) applies to K20Z1 engine.

1. Turn the ignition switch ON (II).
2. Check the TP SENSOR in the DATA LIST with the HDS.

   Is there about 0.5 V when the throttle is fully closed and about 4.5 V when the throttle is fully opened?

   YES—Intermittent failure, system is OK at this time. Check for poor connections or loose terminals at the TP sensor and the ECM/PCM. ■

   NO—Go to step 3.
3. Turn the ignition switch OFF.
4. Disconnect the TP sensor 3P connector.
5. Turn the ignition switch ON (II).
6. On the wire harness side, measure voltage between TP sensor 3P connector terminals No. 1 and No. 3.

TP SENSOR 3P CONNECTOR

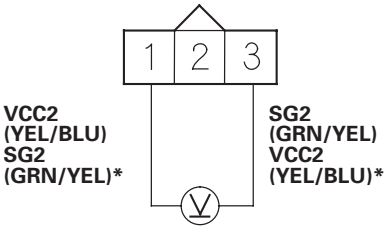

Wire side of female terminals

Is there about 5 V?

YES—Go to step 7.

NO—Go to step 15.

7. Turn the ignition switch OFF.
8. On the sensor side, measure resistance between TP sensor 3P connector terminals No. 2 (No. 1)* and No. 3 (No. 2)* with the throttle fully closed.

TP SENSOR 3P CONNECTOR

K20A3 engine:

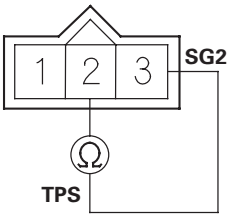

K20Z1 engine:

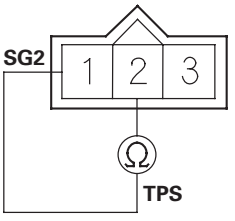

Terminal side of male terminals

Is there about 0.5—0.9 kΩ?

YES—Go to step 9.

NO—Go to step 16.

9. On the sensor side, measure resistance between TP sensor 3P connector terminals No. 1 (No. 2)* and No. 2 (No. 3)* with the throttle fully closed.

TP SENSOR 3P CONNECTOR

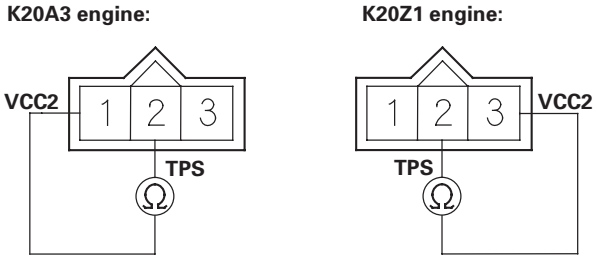

Terminal side of male terminals

Is there about 5.0 kΩ ?

YES—Go to step 10.

NO—Go to step 16.

10. Jump the SCS line with the HDS.

11. Disconnect ECM/PCM connector A (31P).

12. On the wire harness side, check for continuity between TP sensor 3P connector terminal No. 2 and body ground.

TP SENSOR 3P CONNECTOR

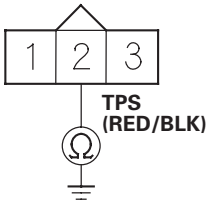

Wire side of female terminals

Is there continuity?

YES—Repair short in the wire between the TP sensor and the ECM/PCM (A29), then go to step 17.

NO—Go to step 13.

13. Connect ECM/PCM connector terminal A29 to body ground with a jumper wire.

ECM/PCM CONNECTOR A (31P)

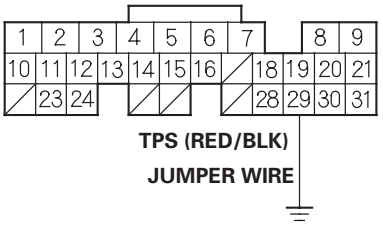

Wire side of female terminals

14. On the wire harness side, check for continuity between TP sensor 3P connector terminal No. 2 and body ground.

TP SENSOR 3P CONNECTOR

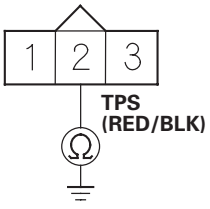

Wire side of female terminals

Is there continuity?

YES—Go to step 22.

NO—Repair open in the wire between the TP sensor and the ECM/PCM (A29), then go to step 17.

(cont'd)

DTC Troubleshooting (cont'd)

15. Measure voltage between ECM/PCM connector terminals A20 and A23.

ECM/PCM CONNECTOR A (31P)

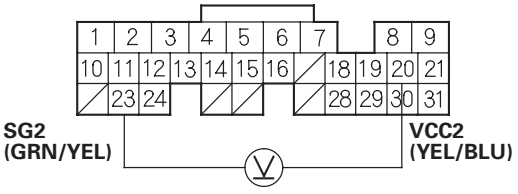

Wire side of female terminals

Is there about 5 V?

YES—Repair open in the wire between the ECM/PCM (A20) and the TP sensor, then go to step 18.

NO—Go to step 22.

16. Replace the throttle body, K20Z1 engine (see page 11-410), K20A3 engine (see page 11-411).

17. Reconnect all connectors.

18. Turn the ignition switch ON (II).

19. Reset the ECM/PCM with the HDS.

20. Do the ECM/PCM idle learn procedure (see page 11-349).

21. Check for Temporary DTCs or DTCs with the HDS.

    Are any Temporary DTCs or DTCs indicated?

    YES—If DTC P0122 is indicated, check for poor connections or loose terminals at the TP sensor and the ECM/PCM, then go to step 1. If any other Temporary DTCs or DTCs are indicated, go to the indicated DTC's troubleshooting.

    NO—Troubleshooting is complete. ■

22. Update the ECM/PCM if it does not have the latest software, or substitute a known-good ECM/PCM (see page 11-6).

23. Check for Temporary DTCs or DTCs with the HDS.

    Are any Temporary DTCs or DTCs indicated?

    YES—If DTC P0122 is indicated, check for poor connections or loose terminals at the TP sensor and the ECM/PCM, then go to step 1. If any other Temporary DTCs or DTCs are indicated, go to the indicated DTC's troubleshooting.

    NO—If the ECM/PCM was updated, troubleshooting is complete. If the ECM/PCM was substituted, replace the original ECM/PCM (see page 11-284). ■

DTC P0123: TP Sensor Circuit High Voltage (2002-2004 models)

NOTE: Information marked with an asterisk (*) applies to K20A2 engine.

1. Turn the ignition switch ON (II).

2. Check the throttle position with a scan tool or the HDS.

   Is there about 10 % or 0.5 V when the throttle is fully closed and about 90 % or 4.5 V when the throttle is fully opened?

   YES—Intermittent failure, system is OK at this time. Check for poor connections or loose terminals at the TP sensor and the ECM/PCM. ■

   NO—Go to step 3.

3. Turn the ignition switch OFF.

4. Disconnect the TP sensor 3P connector.

5. Turn the ignition switch ON (II).

6. At the wire harness side, measure voltage between TP sensor 3P connector terminals No. 1 and No. 3.

TP SENSOR 3P CONNECTOR

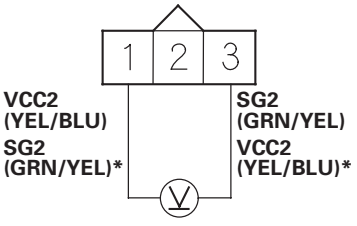

Wire side of female terminals

Is there about 5 V?

YES—Replace the throttle body, K20A2 engine (see page 11-410), K20A3 engine (see page 11-411). ■

NO—Go to step 7.

7. Measure voltage between ECM/PCM connector terminals A10 and A20.

ECM/PCM CONNECTOR A (31P)

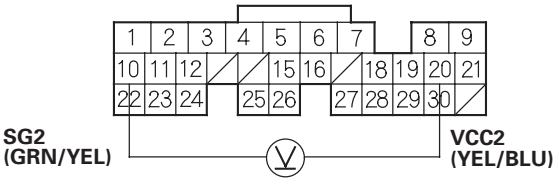

Wire side of female terminals

Is there about 5 V?

YES—Repair open in the wire between the ECM/PCM (A10) and the TP sensor. ■

NO—Update the ECM/PCM if it does not have the latest software, or substitute a known-good ECM/PCM (see page 11-6), then recheck. If the symptom/indication goes away with a known-good ECM/PCM, replace the original ECM/PCM (see page 11-284). ■

DTC Troubleshooting (cont'd)

DTC P0123: TP Sensor Circuit High Voltage (2005-2006 models)

NOTE: Information marked with an asterisk (*) applies to K20Z1 engine.

1. Turn the ignition switch ON (II).
2. Check the TP SENSOR in the DATA LIST with the HDS.

   Is there about 0.5 V when the throttle is fully closed and about 4.5 V when the throttle is fully opened?

   YES—Intermittent failure, system is OK at this time. Check for poor connections or loose terminals at the TP sensor and the ECM/PCM. ■

   NO—Go to step 3.
3. Turn the ignition switch OFF.
4. Disconnect the TP sensor 3P connector.
5. Turn the ignition switch ON (II).
6. At the wire harness side, measure voltage between TP sensor 3P connector terminals No. 1 and No. 3.

TP SENSOR 3P CONNECTOR

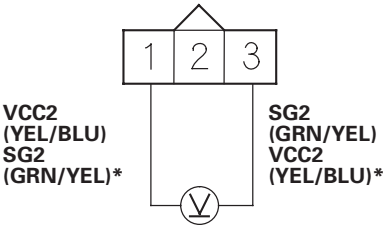

Wire side of female terminals

Is there about 5 V?

YES—Go to step 8.

NO—Go to step 7.

7. Measure voltage between ECM/PCM connector terminals A20 and A23.

ECM/PCM CONNECTOR A (31P)

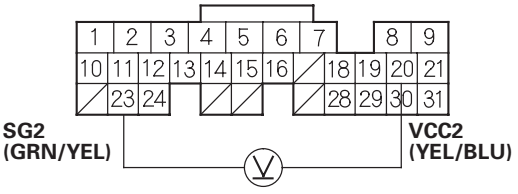

Wire side of female terminals

Is there about 5 V?

YES—Repair open in the wire between the ECM/PCM (A23) and the TP sensor, then go to step 10.

NO—Go to step 14.

8. Turn the ignition switch OFF.
9. Replace the throttle body, K20Z1 engine (see page 11-410), K20A3 engine (see page 11-411).
10. Reconnect all connectors.
11. Turn the ignition switch ON (II).
12. Reset the ECM/PCM with the HDS.
13. Do the ECM/PCM idle learn procedure (see page 11-349).
14. Check for Temporary DTCs or DTCs with the HDS.

    Are any Temporary DTCs or DTCs indicated?

    YES—If DTC P0123 is indicated, check for poor connections or loose terminals at the TP sensor and the ECM/PCM, then go to step 1. If any other Temporary DTCs or DTCs are indicated, go to the indicated DTC's troubleshooting.

    NO—Troubleshooting is complete. ■

15. Update the ECM/PCM if it does not have the latest software, or substitute a known-good ECM/PCM (see page 11-6).

16. Check for Temporary DTCs or DTCs with the HDS.

    Are any Temporary DTCs or DTCs indicated?

    YES—If DTC P0123 is indicated, check for poor connections or loose terminals at the TP sensor and the ECM/PCM, then go to step 1. If any other Temporary DTCs or DTCs are indicated, go to the indicated DTC's troubleshooting.

    NO—If the ECM/PCM was updated, troubleshooting is complete. If the ECM/PCM was substituted, replace the original ECM/PCM (see page 11-284). ■

DTC Troubleshooting (cont'd)

DTC P0125: ECT Sensor Malfunction/Slow Response
(2004 model)

1. Start the engine, and let it idle.

2. Check the ECT with a scan tool or the HDS.

   Is about 86 °F (30 °C) or less, or 2.61 V or more indicated?

   YES—Go to step 3.

   NO—Intermittent failure, system is OK at this time. Check the thermostat and the cooling system. ■

3. Let it idle for 6 minutes.

4. Check the ECT with a scan tool or the HDS.

   Is about 86 °F (30 °C) or less, or 2.61 V or more indicated?

   YES—Replace the ECT sensor (see page 11-280). ■

   NO—Intermittent failure, system is OK at this time. Check the thermostat and the cooling system. ■

DTC P0125: ECT Sensor Malfunction/Slow Response (2005-2006 models)

1. Start the engine, and let it idle.

2. Check the ECT SENSOR in the DATA LIST with the HDS.

   Is about 86 °F (30 °C) or less, or 2.61 V or more indicated?

   YES—Go to step 3.

   NO—Intermittent failure, system is OK at this time. Check the thermostat and the cooling system. ■

3. Let the engine idle for 6 minutes.

4. Check the ECT SENSOR in the DATA LIST with the HDS.

   Is about 86 °F (30 °C) or less, or 2.61 V or more indicated?

   YES—Go to step 5.

   NO—Intermittent failure, system is OK at this time. Check the thermostat and the cooling system. ■

5. Turn the ignition switch OFF.

6. Replace the ECT sensor (see page 11-280).

7. Turn the ignition switch ON (II).

8. Reset the ECM/PCM with the HDS.

9. Do the ECM/PCM idle learn procedure (see page 11-349).

10. Allow the engine to cool to between 23 °F (—5 °C) and 77 °F (25 °C).

11. Start the engine, and let it idle for 20 minutes.

12. Check for Temporary DTCs or DTCs with the HDS.

    Are any Temporary DTCs or DTCs indicated?

    YES—If DTC P0125 is indicated, check for poor connections or loose terminals at the ECT sensor and the ECM/PCM, then go to step 1. If any other Temporary DTCs or DTCs are indicated, go to the indicated DTC's troubleshooting.

    NO—Go to step 13.

13. Monitor the OBD STATUS for DTC P0125 in the DTCs MENU with the HDS.

    Does the screen indicate PASSED?

    YES—Troubleshooting is complete. ■

    NO—If the screen indicates FAILED, check for poor connections or loose terminals at the ECT sensor and the ECM/PCM, then go to step 1. If the screen indicates NOT COMPLETED, go to step 10 and recheck.

DTC Troubleshooting (cont'd)

DTC P0128: Cooling System Malfunction (2002-2004 models)

NOTE: If the DTCs listed below are stored at the same time as DTC P0128, troubleshoot those DTCs first, then recheck for P0128.

P0107, P0108, P1128, P1129: Manifold absolute pressure (MAP) sensor
P1106, P1107, P1108 (P2227, P2228, P2229)*: Barometric pressure (BARO) sensor
P1259 (P2646, P2647)*: VTEC system
P0116, P0117, P0118 (P0125)*: Engine coolant temperature (ECT) sensor
P0112, P0113: Intake air temperature (IAT) sensor
P0500: Vehicle speed sensor (VSS)
P0335, P0336 (P0339)*: Crankshaft position (CKP) sensor
P0300: Random misfire detected
P0301, P0302, P0303, P0304: No. 1, No. 2, No. 3 or No. 4 cylinder misfire detected
P0505 (P0506, P0507)*: Idle control system malfunction
P1519 (P0511)*: Idle air control (IAC) valve
*: 2004 model

DTC P0128 can occasionally set when the hood is opened while the engine is running.

1. Check the engine coolant level.

   Is the engine coolant level low?

   YES—Refill the engine coolant. If necessary, repair the coolant leak. ■

   NO—Go to step 2.

2. Turn the ignition switch ON (II), and make sure the A/C is off.

3. Check the radiator fan.

   Does the radiator fan run continuously?

   YES—Check the radiator fan circuit (see page 10-15), the radiator fan switch circuit open (see page 10-18), the radiator fan switch circuit short (see page 10-18), and the radiator fan switch (see page 10-19). If they are OK, update the ECM/PCM if it does not have the latest software, or substitute a known-good ECM/PCM (see page 11-6), then recheck. If the symptom/indication goes away with a known-good ECM/PCM, replace the original ECM/PCM (see page 11-284). ■

   NO—Replace the thermostat (see page 10-8). ■

DTC P0128: Cooling System Malfunction (2005-2006 models)

NOTE: If the DTCs listed below are stored at the same time as DTC P0128, troubleshoot those DTCs first, then recheck for P0128.

P0112, P0113: Intake air temperature (IAT) sensor
P0116, P0117, P0118, P0125: Engine coolant temperature (ECT) sensor
P0300: Random misfire detected
P0301, P0302, P0303, P0304: No.1, No. 2, No. 3, or No. 4 cylinder misfire detected
P0335, P0339: Crankshaft position (CKP) sensor
P2227, P2228, P2229: Barometric pressure (BARO) sensor
P2646, P2647, P2648, P2649: VTEC system
P0506, P0507: Idle control system malfunction

DTC P0128 can occasionally set when the hood is opened while the engine is running.

1. Turn the ignition switch ON (II).

2. Clear the DTC with the HDS.

3. Turn the blower switch OFF.

4. Turn the A/C switch OFF.

5. Check the FAN CTRL in the DATA LIST with the HDS.

   Is it OFF?

   YES—Go to step 6.

   NO—Wait until the FAN CTRL is turned off, then go to step 6.

6. Check the ECT SENSOR in the DATA LIST with the HDS, then check the radiator fan operation.

   Does the radiator fan keep running when the engine coolant temperature is less than 158 °F (70 °C)?

   YES—Check the radiator fan circuit (see page 10-15), the radiator fan switch circuit open (see page 10-18), the radiator fan switch circuit short (see page 10-18), and the radiator fan switch (see page 10-19). If the circuits and the switch are OK, go to step 22.

   NO—Go to step 7.

7. Start the engine. Hold the engine speed at 3,000 rpm without load (in Park or neutral) until the radiator fan comes on, then let it idle.

8. Turn the ignition switch OFF.

9. Turn the ignition switch ON (II).

10. Do the RADIATOR FAN TEST in the INSPECTION MENU with the HDS for 20 minutes.

11. Check the ECT SENSOR in the DATA LIST with the HDS.

    Is about 151 °F (66 °C) or less, or 1.25 V or more indicated?

    YES—Intermittent failure, system is OK at this time. ■

    NO—Go to step 12.

12. Turn the ignition switch OFF.

13. Cool down the engine until the coolant temperature is between 21 °F (—6 °C) and 104 °F (40 °C).

14. Replace the thermostat (see page 10-8).

15. Turn the ignition switch ON (II).

16. Reset the ECM/PCM with the HDS.

17. Do the ECM/PCM idle learn procedure (see page 11-349).

(cont'd)

DTC Troubleshooting (cont'd)

18. Start the engine. Hold the engine speed at 3,000 rpm without load (in Park or neutral) until the radiator fan comes on, then let it idle.

19. Test-drive at a steady speed between 15—75 mph (24—120 km/h) for 10 minutes.

20. Check for Temporary DTCs or DTCs with the HDS.

    Are any Temporary DTCs or DTCs indicated?

    YES—If DTC P0128 is indicated, check the cooling system, then go to step 1. If any other Temporary DTCs or DTCs are indicated, go to the indicated DTC's troubleshooting.

    NO—Go to step 21.

21. Monitor the OBD STATUS for DTC P0128 in the DTCs MENU with the HDS.

    Does the screen indicate PASSED?

    YES—Troubleshooting is complete. ■

    NO—If the screen indicates FAILED, check cooling system, then go to step 1. If the screen indicates NOT COMPLETED, go to step 18 and recheck.

22. Update the ECM/PCM if it does not have the latest software, or substitute a known-good ECM/PCM (see page 11-6).

23. Cool down the engine until the coolant temperature is between 21 ℉ (—6 ℃) and 104 ℉ (40 ℃).

24. Start the engine. Hold the engine speed at 3,000 rpm without load (in Park or neutral) until the radiator fan comes on, then let it idle.

25. Test-drive at a steady speed between 15—75 mph (24—120 km/h) for 10 minutes.

26. Check for Temporary DTCs or DTCs with the HDS.

    Are any Temporary DTCs or DTCs indicated?

    YES—If DTC P0128 is indicated, check for poor connections or loose terminals at the ECT sensor and the ECM/PCM, then go to step 1. If any other Temporary DTCs or DTCs are indicated, go to the indicated DTC's troubleshooting.

    NO—If the ECM/PCM was updated, troubleshooting is complete. If the ECM/PCM was substituted, replace the original ECM/PCM (see page 11-284). ■

DTC P0133: A/F Sensor (Sensor 1) Slow Response
(2004 model)

DTC P1163: A/F Sensor (Sensor 1) Slow Response
(2002-2003 models)

NOTE:
- Information marked with an asterisk (*) applies to 2004 model.
- Information marked with double asterisk (**) applies to 2002-2003 models.
- If DTC P1162 is stored at the same time as DTC P1163, troubleshoot DTC P1162 first, then recheck for DTC P1163 (2002-2003 models).

1. Reset the ECM/PCM (see page 11-4).

2. Start the engine. Hold the engine speed at 3,000 rpm without load (in Park or neutral) until the radiator fan comes on.

3. Test-drive under these conditions:

   - 55 mph (89 km/h) steady speed
   - A/T in D4 position (M/T in 5th gear)
   - Until readiness code or Temporary DTC P0133* (P1163)** and/or P0133* (P1163)** comes on

4. Check for a Temporary DTC with a scan tool or the HDS.

   Is Temporary DTC P0133 (P1163)** and/or P0133* (P1163)** indicated?*

   YES—Replace the A/F sensor (Sensor 1) (see page 11-279). ■

   NO—Intermittent failure, system is OK at this time. Check for poor connections or loose terminals at the A/F sensor (Sensor 1) and the ECM/PCM. ■

DTC Troubleshooting (cont'd)

DTC P0133: A/F Sensor (Sensor 1) Slow Response (2005-2006 models)

NOTE:
- Information marked with (*1) applies to K20Z1 engine.
- If DTC P0139 is stored at the same time as DTC P0133, troubleshoot DTC P0139 first, then recheck for DTC P0133.

1. Turn the ignition switch ON (II).

2. Clear the DTC with the HDS.

3. Start the engine. Hold the engine speed at 3,000 rpm without load (in Park or neutral) until the radiator fan comes on, then let it idle.

4. Test-drive under these conditions:

   - Engine coolant temperature above 158 °F (70 °C)
   - A/T in D position (M/T in 5th gear)
   - Vehicle speed at 25 mph (40 km/h) or less for 5 minutes, then maintain a steady speed between 26 mph (41 km/h) and 81 mph (130 km/h).

5. Monitor the OBD STATUS for DTC P0133 in the DTCs MENU with the HDS.

   Does the screen indicate FAILED?

   YES—Go to step 6.

   NO—If the screen indicates PASSED, intermittent failure, system is OK at this time. If the screen indicates EXECUTING, keep driving until a result comes on. If the screen indicates OUT OF CONDITION, go to step 3 and recheck.

6. Turn the ignition switch OFF.

7. Replace the A/F sensor (Sensor 1) (see page 11-279).

8. Turn the ignition switch ON (II).

9. Reset the ECM/PCM with the HDS.

10. Do the ECM/PCM idle learn procedure (see page 11-349).

11. Start the engine. Hold the engine speed at 3,000 rpm without load (in Park or neutral) until the radiator fan comes on, then let it idle.

12. Test-drive under these conditions:

    - Engine coolant temperature above 158 °F (70 °C)
    - A/T in D position (M/T in 5th gear)
    - Vehicle speed at 25 mph (40 km/h) or less for 5 minutes, then maintain a steady speed between 26 mph (41 km/h) and 81 mph (130 km/h).

13. Check for Temporary DTCs or DTCs with the HDS.

    Are any Temporary DTCs or DTCs indicated?

    YES—If DTC P0133 is indicated, check for poor connections or loose terminals at the A/F sensor (Sensor 1) and the ECM/PCM, then go to step 1. If any other Temporary DTCs or DTCs are indicated, go to the indicated DTC's troubleshooting.

    NO—Go to step 14.

14. Monitor the OBD STATUS for DTC P0133 in the DTCs MENU with the HDS.

    Does the screen indicates PASSED?

    YES—Troubleshooting is complete. ■

    NO—If the screen indicates FAILED, check for poor connections or loose terminals at the A/F sensor (Sensor 1) and the ECM/PCM, then go to step 1. If the screen indicates EXECUTING, keep driving until a result comes on. If the screen indicates OUT OF CONDITION, go to step 11 and recheck.

DTC P0134: A/F Sensor (Sensor 1) Heater System Malfunction (2003-2004 models)

NOTE: If the vehicle was out of fuel and the engine stalled before this DTC was stored, refuel and clear the DTC with the HDS.

1. Check for a loose A/F sensor (Sensor 1).

   Is it loose in the exhaust pipe?

   YES—Reinstall the A/F sensor (Sensor 1) (see page 11-279). ■

   NO—Go to step 2.

2. Reset the ECM/PCM (see page 11-4).

3. Start the engine. Hold the engine speed at 3,000 rpm without load (in Park or neutral) until the radiator fan comes on, then let it idle 2 minutes.

   Is DTC P0134 indicated?

   YES—Replace the A/F sensor (Sensor 1) (see page 11-279). ■

   NO—Intermittent failure, system is OK at this time. Check for poor connections or loose terminals at the A/F sensor (Sensor 1) and the ECM/PCM. ■

DTC Troubleshooting (cont'd)

DTC P0134: A/F Sensor (Sensor 1) Heater System Malfunction (2005-2006 models)

NOTE: If DTC P0135 is stored at the same time as DTC P0134, troubleshoot DTC P0135 first, then recheck for DTC P0134.

1. Turn the ignition switch ON (II).

2. Clear the DTC with the HDS.

3. Start the engine. Hold the engine speed at 3,000 rpm without load (in Park or neutral) until the radiator fan comes on, then let it idle.

4. Check for Temporary DTCs or DTCs with the HDS.

   Is DTC P0134 indicated?

   YES—Go to step 5.

   NO—Intermittent failure, system is OK at this time. Check for poor connections or loose terminals at the A/F sensor (Sensor 1) and the ECM/PCM. ■

5. Turn the ignition switch OFF.

6. Replace the A/F sensor (Sensor 1) (see page 11-279).

7. Turn the ignition switch ON (II).

8. Reset the ECM/PCM with the HDS.

9. Do the ECM/PCM idle learn procedure (see page 11-349).

10. Check for Temporary DTCs or DTCs with the HDS.

    Are any Temporary DTCs or DTCs indicated?

    YES—If DTC P0134 is indicated, check for poor connections or loose terminals at the A/F sensor (Sensor 1), the A/F sensor relay and the ECM/PCM, then go to step 1. If any other Temporary DTCs or DTCs are indicated, go to the indicated DTC's troubleshooting.

    NO—Go to step 11.

11. Monitor the OBD STATUS for DTC P0134 in the DTCs MENU with the HDS.

    Does the screen indicate PASSED?

    YES—Troubleshooting is complete. ■

    NO—If the screen indicates FAILED, check for poor connections or loose terminals at the A/F sensor (Sensor 1), the A/F sensor relay and the ECM/PCM, then go to step 1. If the screen indicates NOT COMPLETED, go to step 8 and recheck.

DTC P0135: A/F Sensor (Sensor 1) Heater Circuit Malfunction (2004 model)

DTC P1166: A/F Sensor (Sensor 1) Heater Circuit Malfunction (2002-2003 models)

NOTE:
- Information marked with an asterisk (*) applies to 2004 model.
- Information marked with double asterisk (**) applies to 2002-2003 models.

1. Reset the ECM/PCM (see page 11-4).

2. Start the engine.

   Is DTC P0135 (P1166)** indicated?*

   YES—Go to step 3.

   NO—Intermittent failure, system is OK at this time. Check for poor connections or loose terminals at C101 (located under the right side of the dash), C401 (located under middle of the dash), C402 (located under middle of the dash) the A/F sensor relay, the A/F sensor (Sensor 1) and the ECM/PCM.■

3. Check these fuses:

   - No. 14 OPTION (30 A) fuse in under-hood fuse/relay box.
   - No. 2 +B LAF HEATER (20 A) fuse in under-dash fuse/relay box.
   - No. 4 ACG (10 A) in under-dash fuse/relay box.

   Are any of the fuses blown?

   YES—Repair short in the wire between the A/F sensor relay and the fuses.■

   NO—Go to step 4.

4. Measure voltage between ECM/PCM connector terminals A1 and A24, 30 seconds after the ignition switch is turned ON (II).

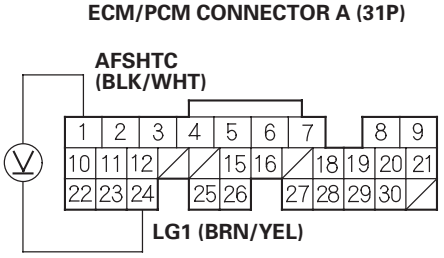

Wire side of female terminals

   Is there battery voltage?

   YES—Update the ECM/PCM if it does not have the latest software, or substitute a known-good ECM/PCM (see page 11-6), then recheck. If the symptom/indication goes away with a known-good ECM/PCM, replace the original ECM/PCM (see page 11-284).■

   NO—Go to step 5.

5. Measure voltage between ECM/PCM connector terminals A22 and A24.

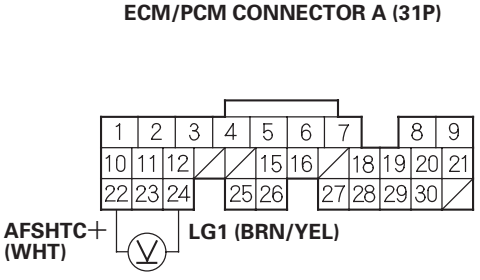

Wire side of female terminals

   Is there battery voltage?

   YES—Go to step 6.

   NO—Go to step 10.

(cont'd)

DTC Troubleshooting (cont'd)

6. Turn the ignition switch OFF.

7. Disconnect ECM/PCM connector E (31P).

8. Turn the ignition switch ON (II).

9. Connect ECM/PCM connector terminal E8 to body ground with a jumper wire, then measure voltage between ECM/PCM connector terminals A1 and A24.

ECM/PCM CONNECTORS

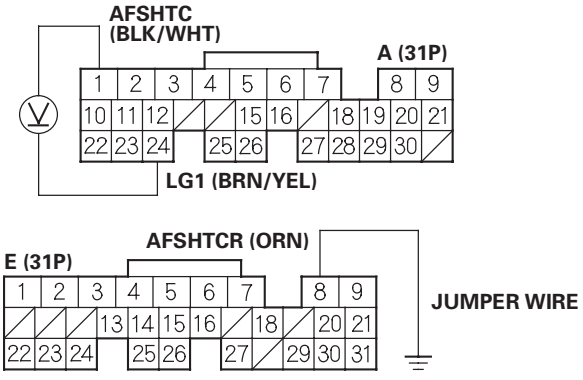

Wire side of female terminals

Is there battery voltage?

YES—Update the ECM/PCM if it does not have the latest software, or substitute a known-good ECM/PCM (see page 11-6), then recheck. If the symptom/indication goes away with a known-good ECM/PCM, replace the original ECM/PCM (see page 11-284). ■

NO—Repair open or short in the wire between the A/F sensor (Sensor 1) and the ECM/PCM (A1). ■

10. Turn the ignition switch OFF.

11. Disconnect ECM/PCM connector A (31P) and the A/F sensor (Sensor 1) 4P connector.

12. Check for continuity between A/F sensor (Sensor 1) 4P connector terminal No. 3 and body ground.

A/F SENSOR (SENSOR 1) 4P CONNECTOR

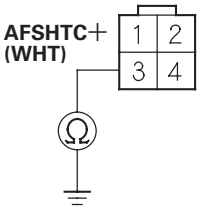

Wire side of female terminals

Is there continuity?

YES—Repair short in the wire between the A/F sensor relay, the A/F sensor (Sensor 1), and the ECM/PCM (A22). ■

NO—Go to step 13.

13. Turn the ignition switch ON (II).

14. Measure voltage between ECM/PCM connector terminals E8 and A24.

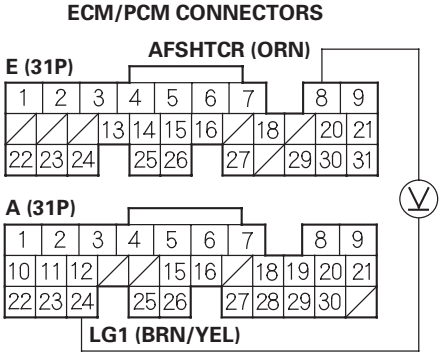

Wire side of female terminals

Is there battery voltage?

YES—Repair open in the wire between the ECM/PCM (A22) and the A/F sensor (Sensor 1). ■

NO—Go to step 15.

15. Check for continuity in the wires between the A/F sensor and the fuses.

Is there continuity?

YES—The wires are OK. Replace the A/F sensor relay. ■

NO—Repair open in the wire between the A/F sensor relay and the fuses. ■

DTC Troubleshooting (cont'd)

DTC P0135: A/F Sensor (Sensor 1) Heater Circuit Malfunction (2005-2006 models)

1. Turn the ignition switch ON (II).

2. Clear the DTC with the HDS.

3. Start the engine. Hold the engine speed at 3,000 rpm without load (in Park or neutral) until the radiator fan comes on, then let it idle.

4. Check for Temporary DTCs or DTCs with the HDS.

   Is DTC P0135 indicated?

   YES—Go to step 5.

   NO—Intermittent failure, system is OK at this time. Check for poor connections or loose terminals at the A/F sensor (Sensor 1), the A/F sensor relay and the ECM/PCM. ■

5. Turn the ignition switch OFF.

6. Check these fuses:

   - No. 14 OPTION (30 A) fuse in under-hood fuse/relay box.
   - No. 2 +B LAF (A/F) HEATER (20 A) fuse in under-dash fuse/relay box.
   - No. 4 ACG (10 A) fuse in under-dash fuse/relay box.

   Are any of the fuses blown?

   YES—Repair short in the wire between the A/F sensor relay and the fuses, then go to step 25.

   NO—Go to step 7.

7. Disconnect the A/F sensor (Sensor 1) 4P connector.

8. At the A/F sensor side, measure resistance between A/F sensor (Sensor 1) 4P connector terminals No. 3 and No. 4.

A/F SENSOR (SENSOR 1) 4P CONNECTOR

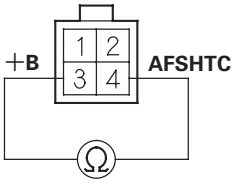

Terminal side of male terminals

Is there 2.1—2.9 Ω at room temperature?

YES—Go to step 9.

NO—Go to step 24.

9. At the A/F sensor side, check for continuity between A/F sensor (Sensor 1) 4P connector terminal No. 2 and A/F sensor (Sensor 1) 4P connector terminals No. 3 and No. 4 individually.

A/F SENSOR (SENSOR 1) 4P CONNECTOR

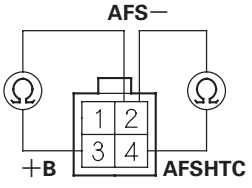

Terminal side of male terminals

Is there continuity?

YES—Go to step 24.

NO—Go to step 10.

10. Jump the SCS line with the HDS.

11. Disconnect ECM/PCM connector A (31P).

12. Check for continuity between ECM/PCM connector terminal A10 and body ground.

ECM/PCM CONNECTOR A (31P)

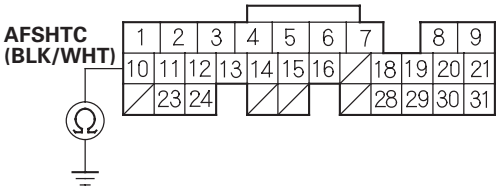

Wire side of female terminals

Is there continuity?

YES—Repair short in the wire between the ECM/PCM (A10) and the A/F sensor (Sensor 1), then go to step 25.

NO—Go to step 13.

13. Connect A/F sensor (Sensor 1) 4P connector terminal No. 4 to body ground with a jumper wire.

A/F SENSOR (SENSOR 1) 4P CONNECTOR

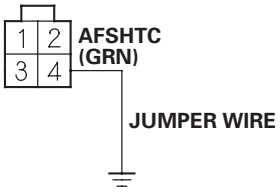

Wire side of female terminals

14. Check for continuity between ECM/PCM connector terminal A10 and body ground.

ECM/PCM CONNECTOR A (31P)

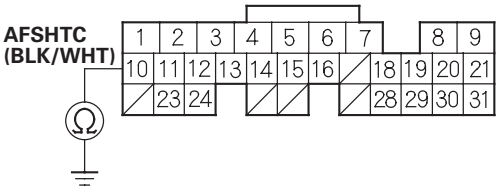

Wire side of female terminals

Is there continuity?

YES—Go to step 15.

NO—Repair open in the wire between the ECM/PCM (A10) and the A/F sensor (Sensor 1), then go to step 25.

15. Remove the A/F sensor relay (A).

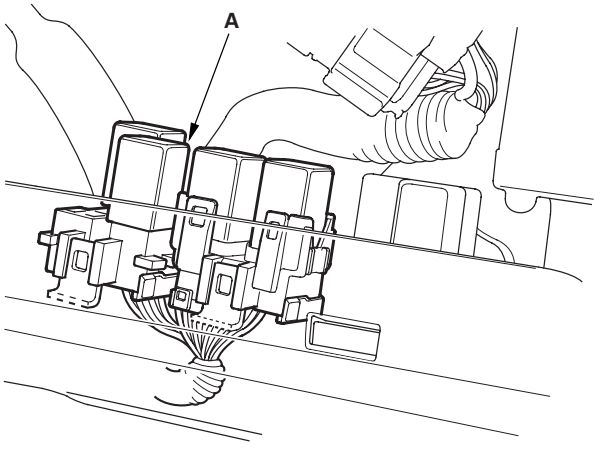

(cont'd)

DTC Troubleshooting (cont'd)

16. Check the A/F sensor relay (see page 22-62).

    Is the A/F sensor relay OK?

    YES—Go to step 17.

    NO—Replace the A/F sensor relay, then go to step 25.

17. Connect A/F sensor (Sensor 1) 4P connector terminal No. 3 to body ground with a jumper wire.

A/F SENSOR (SENSOR 1) 4P CONNECTOR

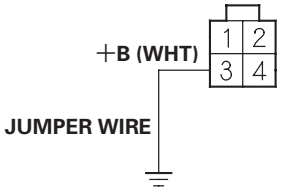

Wire side of female terminals

18. Check for continuity between A/F sensor relay 4P connector terminal No. 1 and body ground.

A/F SENSOR RELAY 4P CONNECTOR

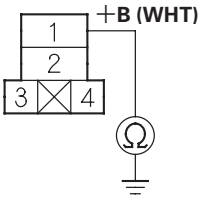

Wire side of female terminals

Is there continuity?

YES—Go to step 19.

NO—Repair open in the wire between the A/F sensor (Sensor 1) and the A/F sensor relay, then go to step 25.

19. Disconnect ECM/PCM connector E (31P).

20. Check for continuity between ECM/PCM connector terminal E8 and A/F sensor relay 4P connector terminal No. 3.

ECM/PCM CONNECTOR E (31P)

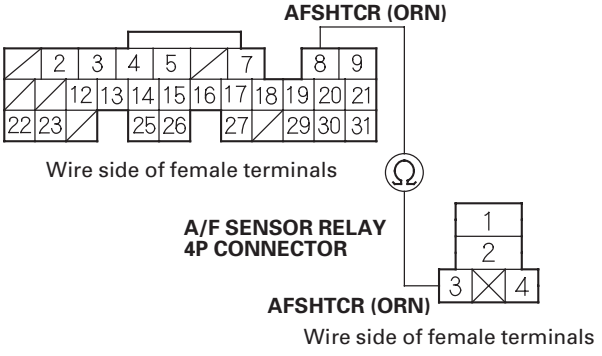

Is there continuity?

YES—Go to step 21.

NO—Repair open in the wire between the ECM/PCM (E8) and the A/F sensor relay, then go to step 25.

21. Measure voltage between A/F sensor relay 4P connector terminal No. 2 and body ground.

A/F SENSOR RELAY 4P CONNECTOR

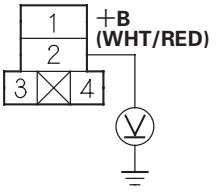

Wire side of female terminals

Is there battery voltage?

YES—Go to step 22.

NO—Repair open in the wire between the A/F sensor relay and the No. 2 +B LAF (A/F) HEATER (20 A) fuse, then go to step 25.

22. Turn the ignition switch ON (II).

23. Measure voltage between A/F sensor relay 4P connector terminal No. 4 and body ground.

A/F SENSOR RELAY 4P CONNECTOR

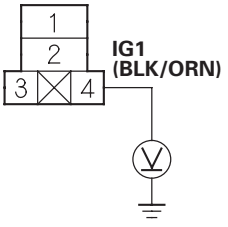

Wire side of female terminals

Is there battery voltage?

YES—Go to step 31.

NO—Repair open in the wire between the A/F sensor relay and the No. 4 ACG (10 A) fuse, then go to step 25.

24. Replace the A/F sensor (Sensor 1) (see page 11-279).

25. Reconnect all connectors.

26. Turn the ignition switch ON (II).

27. Reset the ECM/PCM with the HDS.

28. Do the ECM/PCM idle learn procedure (see page 11-349).

29. Check for Temporary DTCs or DTCs with the HDS.

Are any Temporary DTCs or DTCs indicated?

YES—If DTC P0135 is indicated, check for poor connections or loose terminals at the A/F sensor (Sensor 1) and the ECM/PCM, then go to step 1. If any other Temporary DTCs or DTCs are indicated, go to the indicated DTC's troubleshooting.

NO—Go to step 30.

30. Monitor the OBD STATUS for DTC P0135 in the DTCs MENU with the HDS.

Does the screen indicate PASSED?

YES—Troubleshooting is complete. ■

NO—If the screen indicates FAILED, check for poor connections or loose terminals at the A/F sensor (Sensor 1) and the ECM/PCM, then go to step 1. If the screen indicates NOT COMPLETED, go to step 28 and recheck.

31. Update the ECM/PCM if it does not have the latest software, or substitute a known-good ECM/PCM (see page 11-6).

32. Check for Temporary DTCs or DTCs with the HDS.

Are any Temporary DTCs or DTCs indicated?

YES—If DTC P0135 is indicated, check for poor connections or loose terminals at the A/F sensor (Sensor 1), and the A/F sensor relay and the ECM/PCM, then go to step 1. If any other Temporary DTCs or DTCs are indicated, go to the indicated DTC's troubleshooting.

NO—If the ECM/PCM was updated, troubleshooting is complete. If the ECM/PCM was substituted, replace the original ECM/PCM (see page 11-284). ■

DTC Troubleshooting (cont'd)

DTC P0137: Secondary HO2S (Sensor 2) Circuit Low Voltage (2002-2004 models)

1. Reset the ECM/PCM (see page 11-4).

2. Start the engine. Hold the engine speed at 3,000 rpm without load (in Park or neutral) until the radiator fan comes on.

3. Check the secondary HO2S (Sensor 2) output voltage with a scan tool or the HDS.

   Does the voltage stay at 0.3 V or less?

   YES—Go to step 4.

   NO—Intermittent failure, system is OK at this time. Check for poor connections or loose terminals at C401 (located under middle of dash), C101 (located under middle of dash), the secondary HO2S (Sensor 2), and the ECM/PCM. ■

4. Turn the ignition switch OFF.

5. Disconnect the secondary HO2S (Sensor 2) 4P connector.

6. Start the engine.

7. Check the secondary HO2S (Sensor 2) output voltage with a scan tool or the HDS.

   Does the voltage stay at 0.3 V or less?

   YES—Go to step 8.

   NO—Replace the secondary HO2S (Sensor 2) (see page 11-279). ■

8. Turn the ignition switch OFF.

9. Disconnect ECM/PCM connector A (32P).

10. Check for continuity between secondary HO2S (Sensor 2) 4P connector terminal No. 2 and body ground.

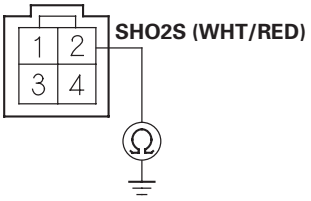

Terminal side of male terminals

Is there continuity?

YES—Repair short in the wire between the ECM/PCM (E2) and the secondary HO2S (Sensor 2). ■

NO—Update the ECM/PCM if it does not have the latest software, or substitute a known-good ECM/PCM (see page 11-6), then recheck. If the symptom/indication goes away with a known-good ECM/PCM, replace the original ECM/PCM (see page 11-284). ■

DTC P0137: Secondary HO2S (Sensor 2) Circuit Low Voltage (2005-2006 models)

1. Turn the ignition switch ON (II).
2. Clear the DTC with the HDS.
3. Start the engine. Hold the engine speed at 3,000 rpm without load (in Park or neutral) until the radiator fan comes on, then let it idle.
4. Check the HO2S S2 in the DATA LIST with the HDS.

   Does the voltage stay at 0.29 V or less?

   YES—Go to step 5.

   NO—Intermittent failure, system is OK at this time. Check for poor connections or loose terminals at the secondary HO2S (Sensor 2) and the ECM/PCM. ■
5. Turn the ignition switch OFF.
6. Disconnect the secondary HO2S (Sensor 2) 4P connector.
7. Turn the ignition switch ON (II).
8. Check the HO2S S2 in the DATA LIST with the HDS.

   Does the voltage stay at 0.29 V or less?

   YES—Go to step 9.

   NO—Go to step 13.
9. Turn the ignition switch OFF.
10. Jump the SCS line with the HDS.
11. Disconnect ECM/PCM connector E (31P).
12. Check for continuity between secondary HO2S (Sensor 2) 4P connector terminal No. 2 and body ground.

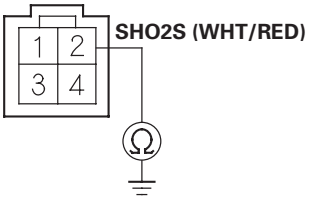

Terminal side of male terminals

   Is there continuity?

   YES—Repair short in the wire between the ECM/PCM (E20) and the secondary HO2S (Sensor 2), then go to step 15.

   NO—Go to step 23.
13. Turn the ignition switch OFF.
14. Replace the secondary HO2S (Sensor 2) (see page 11-279).
15. Reconnect all connectors.
16. Turn the ignition switch ON (II).
17. Reset the ECM/PCM with the HDS.
18. Do the ECM/PCM idle learn procedure (see page 11-349).
19. Start the engine. Hold the engine speed at 3,000 rpm without load (in Park or neutral) until the radiator fan comes on, then let it idle.

(cont'd)

DTC Troubleshooting (cont'd)

20. Test-drive under these conditions:

    - Engine coolant temperature above 176 °F (80 °C)
    - A/T in D position (M/T in 4th gear)
    - Engine speed at 1,500—3,000 rpm
    - Drive 1 minute or more

21. Check for Temporary DTCs or DTCs with the HDS.

    Are any Temporary DTCs or DTCs indicated?

    YES—If DTC P0137 is indicated, check for poor connections or loose terminals at the secondary HO2S (Sensor 2) and the ECM/PCM, then go to step 1. If any other Temporary DTCs or DTCs are indicated, go to the indicated DTC's troubleshooting.

    NO—Go to step 22.

22. Monitor the OBD STATUS for DTC P0137 in the DTCs MENU with the HDS.

    Does the screen indicate PASSED?

    YES—Troubleshooting is complete. ■

    NO—If the screen indicates FAILED, check for poor connections or loose terminals at the secondary HO2S (Sensor 2) and the ECM/PCM, then go to step 1. If the screen indicates EXECUTING, keep driving until a result comes on. If the screen indicates OUT OF CONDITION, go to step 19 and recheck.

23. Update the ECM/PCM if it does not have the latest software, or substitute a known-good ECM/PCM (see page 11-6).

24. Start the engine. Hold the engine speed at 3,000 rpm without load (in Park or neutral) until the radiator fan comes on, then let it idle.

25. Test-drive under these conditions:

    - Engine coolant temperature above 176 °F (80 °C)
    - A/T in D position (M/T in 4th gear)
    - Engine speed at 1,500—3,000 rpm
    - Drive 1 minute or more

26. Check for Temporary DTCs or DTCs with the HDS.

    Are any Temporary DTCs or DTCs indicated?

    YES—If DTC P0137 is indicated, check for poor connections or loose terminals at the secondary HO2S (Sensor 2) and the ECM/PCM, then go step 1. If any other Temporary DTCs or DTCs are indicated, go to the indicated DTC's troubleshooting.

    NO—If the ECM/PCM was updated, troubleshooting is complete. If the ECM/PCM was substituted, replace the original ECM/PCM (see page 11-284). ■

DTC P0138: Secondary HO2S (Sensor 2) Circuit High Voltage (2002-2004 models)

1. Reset the ECM/PCM (see page 11-4).

2. Start the engine. Hold the engine speed at 3,000 rpm without load (in Park or neutral) until the radiator fan comes on.

3. Check the secondary HO2S (Sensor 2) output voltage at 3,000 rpm with a scan tool or the HDS.

   Does the voltage stay at 1.0 V or more?

   YES—Go to step 4.

   NO—Intermittent failure, system is OK at this time. Check for poor connections or loose terminals at the secondary HO2S (Sensor 2), and the ECM/PCM. ■

4. Turn the ignition switch OFF.

5. Disconnect the secondary HO2S (Sensor 2) 4P connector.

6. Connect secondary HO2S (Sensor 2) 4P connector terminals No. 1 and No. 2 with a jumper wire.

SECONDARY HO2S (SENSOR 2) 4P CONNECTOR

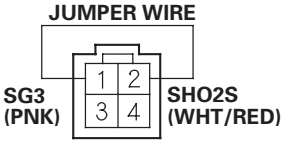

Terminal side of male terminals

7. Turn the ignition switch ON (II).

8. Check the secondary HO2S (Sensor 2) output voltage with a scan tool or the HDS.

   Is there 0.9 V or more?

   YES—Go to step 9.

   NO—Replace the secondary HO2S (Seneor 2) (see page 11-279). ■

9. Turn the ignition switch OFF.

(cont'd)

DTC Troubleshooting (cont'd)

10. Connect ECM/PCM connector terminals E2 and E4 with a jumper wire.

ECM/PCM CONNECTOR E (31P)

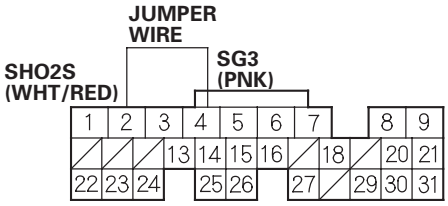

Wire side of female terminals

11. Turn the ignition switch ON (II).

12. Check the secondary HO2S (Sensor 2) output voltage with a scan tool or the HDS.

    Is there 0.9 V or more?

    YES—Update the ECM/PCM if it does not have the latest software, or substitute a known-good ECM/PCM (see page 11-6), then recheck. If the symptom/indication goes away with a known-good ECM/PCM, replace the original ECM/PCM (see page 11-284). ■

    NO—Go to step 13.

13. Turn the ignition switch OFF.

14. Remove the jumper wire.

15. Disconnect ECM/PCM connector E (31P).

16. Connect secondary HO2S (Sensor 2) 4P connector terminal No. 2 to body ground with a jumper wire.

SECONDARY HO2S (SENSOR 2) 4P CONNECTOR

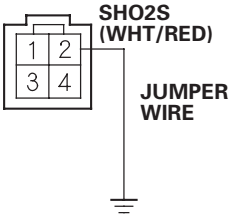

Terminal side of male terminals

17. Check for continuity between ECM/PCM connector terminal E2 and body ground.

ECM/PCM CONNECTOR E (31P)

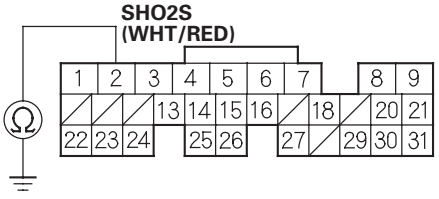

Wire side of female terminals

Is there continuity?

YES—Repair open in the wire between the ECM/PCM (E4) and the secondary HO2S (Sensor 2). ■

NO—Repair open in the wire between the ECM/PCM (E2) and the secondary HO2S (Sensor 2). ■

DTC P0138: Secondary HO2S (Sensor 2) Circuit High Voltage (2005-2006 models)

1. Turn the ignition switch ON (II).
2. Clear the DTC with the HDS.
3. Start the engine. Hold the engine speed at 3,000 rpm without load (in Park or neutral) until the radiator fan comes on, then let it idle.
4. Check the HO2S S2 in the DATA LIST with the HDS.

   Does the voltage stay at 1.25 V or more?

   YES—Go to step 5.

   NO—Intermittent failure, system is OK at this time. Check for poor connections or loose terminals at the secondary HO2S (Sensor 2) and the ECM/PCM. ■
5. Turn the ignition switch OFF.
6. Disconnect the secondary HO2S (Sensor 2) 4P connector.
7. Connect secondary HO2S (Sensor 2) 4P connector terminals No. 1 and No. 2 with a jumper wire.

SECONDARY HO2S (SENSOR 2) 4P CONNECTOR

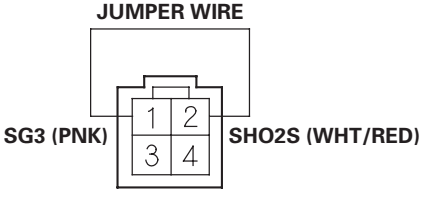

Terminal side of male terminals

8. Turn the ignition switch ON (II).
9. Check the HO2S S2 in the DATA LIST with the HDS.

   Does the voltage stay at 1.25 V or more?

   YES—Go to step 10.

   NO—Go to step 19.
10. Turn the ignition switch OFF.
11. Remove the jumper wire from the secondary HO2S (Sensor 2) 4P connector.
12. Connect secondary HO2S (Sensor 2) 4P connector terminal No. 2 to body ground with a jumper wire.

SECONDARY HO2S (SENSOR 2) 4P CONNECTOR

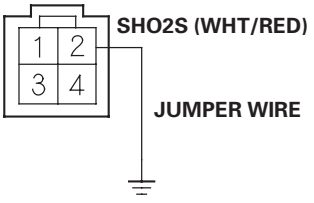

Terminal side of male terminals

13. Turn the ignition switch ON (II).
14. Check the HO2S S2 in the DATA LIST with the HDS.

    Does the voltage stay at 1.25 V or more?

    YES—Go to step 15.

    NO—Repair open in the wire between the ECM/PCM (E4) and the secondary HO2S (Sensor 2), then go to step 21.

(cont'd)

DTC Troubleshooting (cont'd)

15. Turn the ignition switch OFF.

16. Jump the SCS line with the HDS.

17. Disconnect ECM/PCM connector E (31P).

18. Check for continuity between ECM/PCM connector terminal E20 and body ground.

ECM/PCM CONNECTOR E (31P)

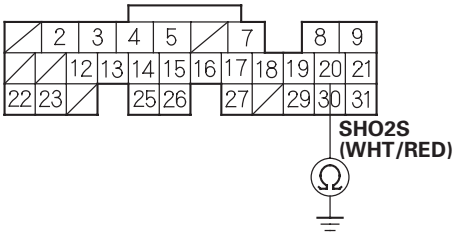

Wire side of female terminals

Is there continuity?

YES—Go to step 29.

NO—Repair open in the wire between the ECM/PCM (E20) and the secondary HO2S (Sensor 2), then go to step 21.

19. Turn the ignition switch OFF.

20. Replace the secondary HO2S (Sensor 2) (see page 11-279).

21. Reconnect all connectors.

22. Turn the ignition switch ON (II).

23. Reset the ECM/PCM with the HDS.

24. Do the ECM/PCM idle learn procedure (see page 11-349).

25. Start the engine. Hold the engine speed at 3,000 rpm without load (in Park or neutral) until the radiator fan comes on, then let it idle.

26. Test-drive under these conditions:

    - Engine coolant temperature above 176 °F (80 °C)
    - A/T in D position (M/T in 4th gear)
    - Engine speed at 1,500—3,000 rpm
    - Drive 1 minute or more

27. Check for Temporary DTCs or DTCs with the HDS.

    Are any Temporary DTCs or DTCs indicated?

    YES—If DTC P0138 is indicated, check for poor connections or loose terminals at the secondary HO2S (Sensor 2) and the ECM/PCM, then go step 1. If any other Temporary DTCs or DTCs are indicated, go to the indicated DTC's troubleshooting.

    NO—Go to step 28.

28. Monitor the OBD STATUS for DTC P0138 in the DTCs MENU with the HDS.

    Does the screen indicate PASSED?

    YES—Troubleshooting is complete. ■

    NO—If the screen indicates FAILED, check for poor connections or loose terminals at the secondary HO2S (Sensor 2) and the ECM/PCM, then go to step 1. If the screen indicates EXECUTING, keep driving until a result comes on. If the screen indicates OUT OF CONDITION, go to step 25 and recheck.

29. Update the ECM/PCM if it does not have the latest software, or substitute a known-good ECM/PCM (see page 11-6).

30. Start the engine. Hold the engine speed at 3,000 rpm without load (in Park or neutral) until the radiator fan comes on, then let it idle.

31. Test-drive under these conditions:

    - Engine coolant temperature above 176 ℉ (80 ℃)
    - A/T in D position (M/T in 4th gear)
    - Engine speed at 1,500—3,000 rpm
    - Drive 1 minute or more

32. Check for Temporary DTCs or DTCs with the HDS.

    Are any Temporary DTCs or DTCs indicated?

    YES—If DTC P0138 is indicated, check for poor connections or loose terminals at the secondary HO2S (Sensor 2) and the ECM/PCM, then go to step 1. If any other Temporary DTCs or DTCs are indicated, go to the indicated DTC's troubleshooting.

    NO—If the ECM/PCM was updated, troubleshooting is complete. If the ECM/PCM was substituted, replace the original ECM/PCM (see page 11-284). ■

DTC Troubleshooting (cont'd)

DTC P0139: Secondary HO2S (Sensor 2) Slow Response
(2002-2004 models)

1. Reset the ECM/PCM (see page 11-4).

2. Start the engine. Hold the engine speed at 3,000 rpm without load (in Park or neutral) until the radiator fan comes on.

3. Check the secondary HO2S (Sensor 2) output voltage at 3,000 rpm with a scan tool or the HDS.

   Does the voltage stay within 0.3—0.8 V for 2 minutes?

   YES—Replace the secondary HO2S (Sensor 2) (see page 11-279).■

   NO—Intermittent failure, system is OK at this time. Check for poor connections or loose terminals at the secondary HO2S (Sensor 2), and the ECM/PCM.■

DTC P0139: Secondary HO2S (Sensor 2) Slow Response (2005-2006 models)

1. Turn the ignition switch ON (II).

2. Clear the DTC with the HDS.

3. Start the engine. Hold the engine speed at 3,000 rpm without load (in Park or neutral) until the radiator fan comes on, then let it idle.

4. Test-drive under these conditions:

   - Engine coolant temperature above 158 °F (70 °C)
   - A/T in D position (M/T in 4th gear)
   - Vehicle speed at 35 mph (56 km/h) or more
   - Drive about 20 seconds

5. Monitor the OBD STATUS for DTC P0139 in the DTCs MENU with the HDS.

   Does the screen indicate FAILED?

   YES—Go to step 6.

   NO—If the screen indicates PASSED, intermittent failure, system is OK at this time. If the screen indicates EXECUTING, keep driving until a result comes on. If the screen indicates OUT OF CONDITION, go to step 3 and recheck.

6. Turn the ignition switch OFF.

7. Replace the secondary HO2S (Sensor 2) (see page 11-279).

8. Turn the ignition switch ON (II).

9. Reset the ECM/PCM with the HDS.

10. Do the ECM/PCM idle learn procedure (see page 11-349).

11. Start the engine. Hold the engine speed at 3,000 rpm without load (in Park or neutral) until the radiator fan comes on, then let it idle.

12. Test-drive under these conditions:

    - Engine coolant temperature above 158 °F (70 °C)
    - A/T in D position (M/T in 4th gear)
    - Vehicle speed at 35 mph (56 km/h) or more
    - Drive about 20 seconds

13. Check for Temporary DTCs or DTCs with the HDS.

    Are any Temporary DTCs or DTCs indicated?

    YES—If DTC P0139 is indicated, check for poor connections or loose terminals at the secondary HO2S (Sensor 2) and the ECM/PCM, then go to step 1. If any other Temporary DTCs or DTCs are indicated, go to the indicated DTC's troubleshooting.

    NO—Go to step 14.

14. Monitor the OBD STATUS for DTC P0139 in the DTCs MENU with the HDS.

    Does the screen indicate PASSED?

    YES—Troubleshooting is complete. ■

    NO—If the screen indicates FAILED, check for poor connections or loose terminals at the secondary HO2S (Sensor 2) and the ECM/PCM, then go to step 1. If the screen indicates EXECUTING, keep driving until a result comes on. If the screen indicates OUT OF CONDITION, go to step 11 and recheck.

DTC Troubleshooting (cont'd)

DTC P0141: Secondary HO2S (Sensor 2) Heater Circuit Malfunction (2002-2004 models)

1. Reset the ECM/PCM (see page 11-4).

2. Start the engine.

   Is DTC P0141 indicated?

   YES—Go to step 3.

   NO—Intermittent failure, system is OK at this time. Check for poor connections or loose terminals at the secondary HO2S (Sensor 2) and the ECM/PCM. ■

3. Turn the ignition switch OFF.

4. Disconnect the secondary HO2S (Sensor 2) 4P connector.

5. At the secondary HO2S (Sensor 2) side, measure resistance between secondary HO2S (Sensor 2) 4P connector terminals No. 3 and No. 4.

SECONDARY HO2S (SENSOR 2) 4P CONNECTOR

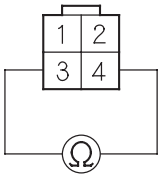

Wire side of female terminals

Is there 10—40 Ω ?

YES—Go to step 6.

NO—Replace the secondary HO2S (Sensor 2) (see page 11-279). ■

6. Check for continuity between body ground and secondary HO2S (Sensor 2) 4P connector terminals No. 3 and No. 4 individually.

SECONDARY HO2S (SENSOR 2) 4P CONNECTOR

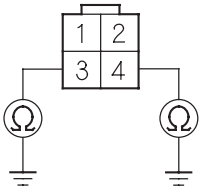

Wire side of female terminals

Is there continuity?

YES—Replace the secondary HO2S (Sensor 2) (see page 11-279). ■

NO—Go to step 7.

7. Turn the ignition switch ON (II).

8. Measure voltage between secondary HO2S (Sensor 2) 4P connector terminals No. 3 and No. 4.

SECONDARY HO2S (SENSOR 2) 4P CONNECTOR

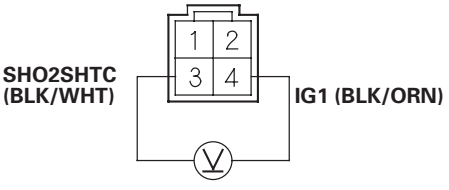

Terminal side of male terminals

Is there battery voltage?

YES—Go to step 9.

NO—Go to step 12.

9. Turn the ignition switch OFF.

10. Disconnect ECM/PCM connector E (31P).

11. Check for continuity between ECM/PCM connector terminal E6 and body ground.

ECM/PCM CONNECTOR E (31P)

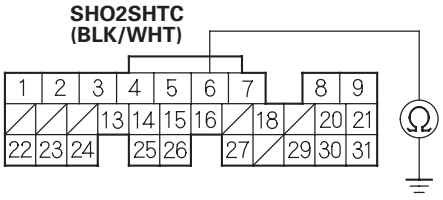

Wire side of female terminals

Is there continuity?

YES—Repair short in the wire between the ECM/PCM (E6) and the secondary HO2S (Sensor 2). ■

NO—Update the ECM/PCM if it does not have the latest software, or substitute a known-good ECM/PCM (see page 11-6), then recheck. If the symptom/indication goes away with a known-good ECM/PCM, replace the original ECM/PCM (see page 11-284). ■

12. Measure voltage between secondary HO2S (Sensor 2) 4P connector terminal No. 4 and body ground.

SECONDARY HO2S (SENSOR 2) 4P CONNECTOR

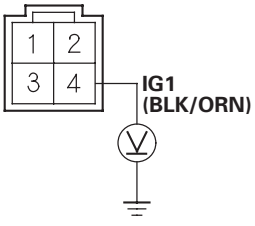

Terminal side of male terminals

Is there battery voltage?

YES—Go to step 13.

NO—Check the No. 4 ACG (10 A) fuse in the under-dash fuse/relay box. If the fuse is OK, repair open in the wire between the secondary HO2S (Sensor 2) and the No. 4 ACG (10 A) fuse. ■

13. Turn the ignition switch OFF.

14. Reconnect the secondary HO2S (Sensor 2) 4P connector.

15. Disconnect ECM/PCM connector E (31P).

16. Turn the ignition switch ON (II).

17. Measure voltage between ECM/PCM connector terminals A5 and E6.

ECM/PCM CONNECTORS

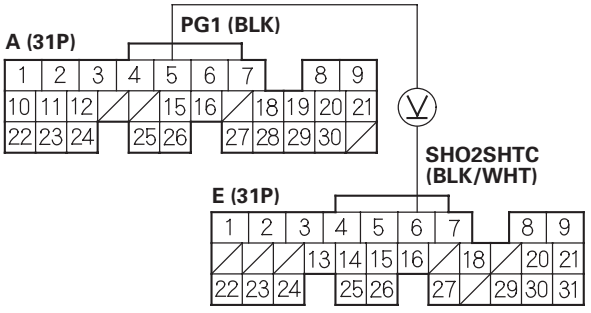

Wire side of female terminals

Is there 0.1 V or less?

YES—Repair open in the wire between the ECM/PCM (E6) and the secondary HO2S (Sensor 2). ■

NO—Update the ECM/PCM if it does not have the latest software, or substitute a known-good ECM/PCM (see page 11-6), then recheck. If the symptom/indication goes away with a known-good ECM/PCM, replace the original ECM/PCM (see page 11-284). ■

DTC Troubleshooting (cont'd)

DTC P0141: Secondary HO2S (Sensor 2) Heater Circuit Malfunction (2005-2006 models)

1. Turn the ignition switch ON (II).
2. Clear the DTC with the HDS.
3. Start the engine.
4. Check for Temporary DTCs or DTCs with the HDS.

   Is DTC P0141 indicated?

   YES—Go to step 5.

   NO—Intermittent failure, system is OK at this time. Check for poor connections or loose terminals at the secondary HO2S (Sensor 2) and the ECM/PCM. ■

5. Check the No. 4 ACG (10 A) fuse in the under-dash fuse/relay box.

   Is the fuse OK?

   YES—Go to step 6.

   NO—Repair short in the wire between the secondary HO2S (Sensor 2) and the No. 4 ACG (10 A) fuse, then go to step 24.

6. Turn the ignition switch OFF.
7. Disconnect the secondary HO2S (Sensor 2) 4P connector.
8. At the secondary HO2S (Sensor 2) side, measure resistance between secondary HO2S (Sensor 2) 4P connector terminals No. 3 and No. 4.

SECONDARY HO2S (SENSOR 2) 4P CONNECTOR

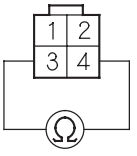

Wire side of female terminals

Is there 5.0—6.4 Ω at room temperature?

YES—Go to step 9.

NO—Go to step 23.

9. At the secondary HO2S (Sensor 2) side, check for continuity between body ground and secondary HO2S (Sensor 2) 4P connector terminals No. 3 and No. 4 individually.

SECONDARY HO2S (SENSOR 2) 4P CONNECTOR

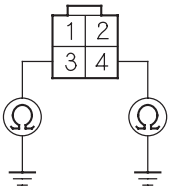

Wire side of female terminals

Is there continuity?

YES—Go to step 23.

NO—Go to step 10.

10. Turn the ignition switch ON (II).

11. On the harness side, measure voltage between secondary HO2S (Sensor 2) 4P connector terminals No. 3 and No. 4.

SECONDARY HO2S (SENSOR 2) 4P CONNECTOR

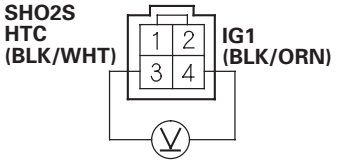

Terminal side of male terminals

Is there battery voltage?

YES—Go to step 12.

NO—Go to step 16.

12. Turn the ignition switch OFF.

13. Jump the SCS line with the HDS.

14. Disconnect ECM/PCM connector E (31P).

15. Check for continuity between ECM/PCM connector terminal E21 and body ground.

ECM/PCM CONNECTOR E (31P)

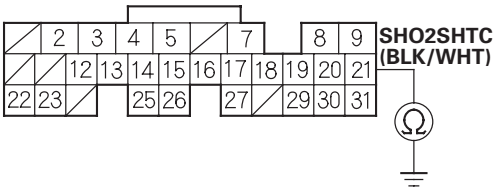

Wire side of female terminals

Is there continuity?

YES—Repair short in the wire between the ECM/PCM (E21) and the secondary HO2S (Sensor 2), then go to step 24.

NO—Go to step 30.

16. Measure voltage between secondary HO2S (Sensor 2) 4P connector terminal No. 4 and body ground.

SECONDARY HO2S (SENSOR 2) 4P CONNECTOR

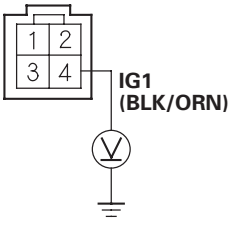

Terminal side of male terminals

Is there battery voltage?

YES—Go to step 17.

NO—Check the No. 4 ACG (10 A) fuse in the under-dash fuse/relay box. If the fuse is OK, repair open in the wire between the secondary HO2S (Sensor 2) and the No. 4 ACG (10 A) fuse, then go to step 24.

(cont'd)

DTC Troubleshooting (cont'd)

17. Turn the ignition switch OFF.

18. Jump the SCS line with the HDS.

19. Reconnect the secondary HO2S (Sensor 2) 4P connector.

20. Disconnect ECM/PCM connector E (31P).

21. Turn the ignition switch ON (II).

22. Measure voltage between ECM/PCM connector terminals A5 and E21.

ECM/PCM CONNECTORS

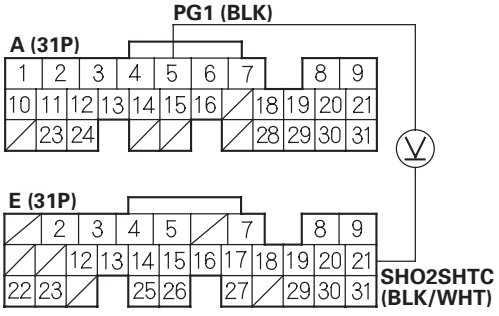

Wire side of female terminals

Is there 0.1 V or less?

YES—Repair open in the wire between the ECM/PCM (E21) and the secondary HO2S (Sensor 2), then go to step 24.

NO—Go to step 30.

23. Replace the secondary HO2S (Sensor 2) (see page 11-279).

24. Reconnect all connectors.

25. Turn the ignition switch ON (II).

26. Reset the ECM/PCM with the HDS.

27. Do the ECM/PCM idle learn procedure (see page 11-349).

28. Check for Temporary DTCs or DTCs with the HDS.

Are any Temporary DTCs or DTCs indicated?

YES—If DTC P0141 is indicated, check for poor connections or loose terminals at the secondary HO2S (Sensor 2) and the ECM/PCM, then go to step 1. If any other Temporary DTCs or DTCs are indicated, go to the indicated DTC's troubleshooting.

NO—Go to step 29.

29. Monitor the OBD STATUS for DTC P0141 in the DTCs MENU with the HDS.

Does the screen indicate PASSED?

YES—Troubleshooting is complete. ■

NO—If the screen indicates FAILED, check for poor connections or loose terminals at the secondary HO2S (Sensor 2) and the ECM/PCM, then go to step 1. If the screen indicates NOT COMPLETED, go to step 27 and recheck.

30. Update the ECM/PCM if it does not have the latest software, or substitute a known-good ECM/PCM (see page 11-6).

31. Check for Temporary DTCs or DTCs with the HDS.

Are any Temporary DTCs or DTCs indicated?

YES—If DTC P0141 is indicated, check for poor connections or loose terminals at the secondary HO2S (Sensor 2) and the ECM/PCM, then go to step 1. If any other Temporary DTCs or DTCs are indicated, go to the indicated DTC's troubleshooting.

NO—If the ECM/PCM was updated, troubleshooting is complete. If the ECM/PCM was substituted, replace the original ECM/PCM (see page 11-284). ■

DTC P0171: Fuel System Too Lean (2002-2004 models)

DTC P0172: Fuel System Too Rich (2002-2004 models)

Special Tools Required
Vacuum pump/gauge, 0—30 in.Hg, Snap-on YA4000A or equivalent, commercially available

NOTE: If some of the DTCs listed below are stored at the same time as DTC P0171 and/or P0172, troubleshoot those DTCs first, then recheck for P0171 and/or P0172.

P0107, P0108, P1128, P1129: Manifold absolute pressure (MAP) sensor
P1166, P1167 *1, P0135 *2: A/F sensor (Sensor 1) heater
P0137, P0138: Secondary HO2S (Sensor 2)
P0141: Secondary HO2S (Sensor 2) heater
P0340, P0344: CMP sensor A
P1259, P2646 *2, P2647 *2: VTEC system
* 1: 2002 model
* 2: 2004 model

1. Check the fuel pressure (see page 11-363).

   Is the fuel pressure OK?

   YES—Go to step 2.

   NO—Check these items:

   - If the pressure is too high, replace the fuel pressure regulator (see page 11-373). ■
   - If the pressure is too low, check the fuel pump, the fuel feed pipe, and the fuel filter, and replace the fuel pressure regulator (see page 11-373). ■

2. Turn the ignition switch OFF.

3. With the vacuum pump/gauge, 0—30 in.Hg,, apply vacuum to the evaporative emission (EVAP) canister purge valve (A) from the intake manifold side.

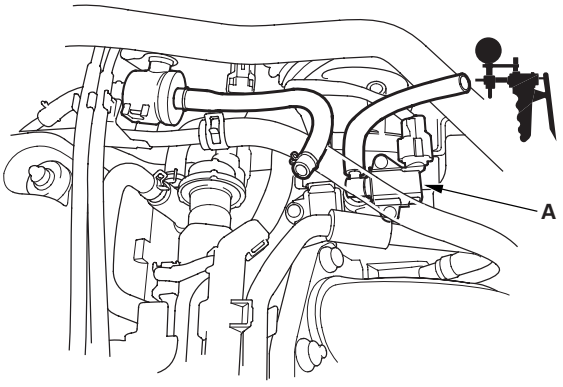

   Does it hold vacuum?

   YES—Check the valve clearances and adjust if necessary. If the valve clearances are OK, replace the injectors (see page 11-277). ■

   NO—Replace the EVAP canister purge valve (see page 11-412). ■

DTC Troubleshooting (cont'd)

DTC P0171: Fuel System Too Lean (2005-2006 models)

DTC P0172: Fuel System Too Rich (2005-2006 models)

NOTE: If some of the DTCs listed below are stored at the same time as DTC P0171 and/or P0172, troubleshoot those DTCs first, then recheck for P0171 and/or P0172.

P0107, P0108, P1128, P1129: Manifold absolute pressure (MAP) sensor
P0133, P1157, P2195, P2238, P2252, P2A00: Air fuel ratio (A/F) sensor (Sensor 1)
P0134, P0135: Air fuel ratio (A/F) sensor (Sensor 1) heater
P0137, P0138, P0139: Secondary HO2S (Sensor 2)
P0141: Secondary HO2S (Sensor 2) heater
P2646, P2647, P2648, P2649: VTEC system
P2279: Intake air leakage

1. Check the fuel pressure (see page 11-363).

   Is the fuel pressure OK?

   YES—Check the engine valve clearances and adjust if necessary. If the valve clearances are OK, replace the injectors (see page 11-277), then go to step 2.

   NO—Check the fuel pressure (see page 11-363).

   - If the pressure is too high, replace the fuel pressure regulator (see page 11-373), then go to step 2.
   - If the pressure is too low, check the fuel pump and the fuel feed line, then go to step 2.

2. Turn the ignition switch ON (II).

3. Reset the ECM/PCM with the HDS.

4. Do the ECM/PCM idle learn procedure (see page 11-349).

5. Start the engine. Hold the engine speed at 3,000 rpm without load (in Park or neutral) until the radiator fan comes on, then let it idle.

6. Test-drive under these conditions:

   - Engine coolant temperature above 158 °F (70 °C)
   - A/T in D position (M/T in 5th gear)
   - Drive at a steady speed between 15—75 mph (24—120 km/h)

   NOTE: DTC P0171, P0172, P0174, and/or P0175 may take up to 80 minutes of test driving to set. Using the HDS, monitor the air fuel feed back average (AF FB AVE). If the long term fuel trim/air fuel feed back average stays within 0.81—1.17, there is no problem at this time.

7. Check for Temporary DTCs or DTCs with the HDS.

   Are any Temporary DTCs or DTCs indicated?

   YES—If DTC P0171 or P0172 is indicated, go to step 1. If any other Temporary DTCs or DTCs are indicated, go to the indicated DTC's troubleshooting.

   NO—Troubleshooting is complete. ■

DTC P0300: Random Misfire and Some Combination of the Following:
(2002-2004 models)

DTC P0301: No. 1 Cylinder Misfire Detected
(2002-2004 models)

DTC P0302: No. 2 Cylinder Misfire Detected
(2002-2004 models)

DTC P0303: No. 3 Cylinder Misfire Detected
(2002-2004 models)

DTC P0304: No. 4 Cylinder Misfire Detected
(2002-2004 models)

NOTE:
- If the misfiring is frequent enough to trigger detection of increased emissions during two consecutive driving cycles, the MIL will come on, and DTC P0300 (and some combination of P0301 through P0304) will be stored.
- If the misfiring is frequent enough to damage the catalyst, the MIL will blink whenever the misfiring occurs, and DTC P0300 (and some combination of P0301 through P0304) will be stored. When the misfiring stops, the MIL will remain on.

1. Troubleshoot the following DTCs first if any of them were stored along with the random misfire DTC(s):
   P0107, P0108, P1128, P1129: Manifold absolute pressure (MAP) sensor
   P0171, P0172: Fuel system
   P0335, P0336 (P0339)*: Crankshaft position (CKP) sensor
   P0505 (P0506, P0507)*: Idle control system
   P1259 (P2646, P2647)*: VTEC system
   P1361, P1362 (P0365, P0369)*: Camshaft position (CMP) sensor B
   P1519 (P0511)*: Idle air control (IAC) valve
   *: 2004 model

2. Test-drive the vehicle to verify the symptom.

3. Find the symptom in the chart below, and do the related procedures and checks, in the order listed, until you find the cause.

Symptom	Procedure(s)	Also check for:
Random misfire only at low RPM and under load	Check fuel pressure (see page 11-363).	• Low compression. • Low quality fuel.
Random misfire only during acceleration	Check fuel pressure (see page 11-363).	Malfunction in the VTEC system (see page 6-7).
Random misfire at high RPM, under load, or under random conditions	Check fuel pressure (see page 11-363).	Correct valve clearance (see page 6-11).

DTC Troubleshooting (cont'd)

DTC P0300: Random Misfire and Some Combination of the Following: (2005-2006 models)

DTC P0301: No. 1 Cylinder Misfire Detected (2005-2006 models)

DTC P0302: No. 2 Cylinder Misfire Detected (2005-2006 models)

DTC P0303: No. 3 Cylinder Misfire Detected (2005-2006 models)

DTC P0304: No. 4 Cylinder Misfire Detected (2005-2006 models)

Special Tools Required
- Pressure gauge adaptor 07NAJ-P07010A
- A/T low pressure gauge w/panel 07406-0070300
- A/T pressure hose 07406-0020201
- A/T pressure hose, 2,210 mm 07MAJ-PY4011A
- A/T pressure hose, adapter 07MAJ-PY40120
- Oil pressure hose 07ZAJ-S5A0200

NOTE:
- If the misfire is frequent enough to trigger detection of increased emissions during 2 consecutive driving cycles, the MIL will come on, and DTC P0300 (and some combination of P0301 through P0304) will be stored.
- If the misfire is frequent enough to damage the catalyst, the MIL will flash whenever the misfire occurs, and DTC P0300 (and some combination of P0301 through P0304) will be stored. When the misfire stops, the MIL will remain on.
- Troubleshoot the following DTCs first, if any of them were stored along with the random misfire DTC(s):

P0107, P0108, P1128, P1129: Manifold absolute pressure (MAP) sensor
P0171, P0172: Fuel system
P0335, P0339: Crankshaft position (CKP) sensor
P0365, P0369: Camshaft position (CMP) sensor B
P0506, P0507: Idle control system

1. Record all freeze data and on-board snapshots with the HDS.

2. Clear the DTC with the HDS.

3. Start the engine (in Park or neutral), then let it idle without load.

4. Monitor the OBD STATUS for DTC P0301, P0302, P0303, or P0304 in the DTCs MENU with the HDS.

   Does the screen indicate FAILED?

   YES—Go to step 9.

   NO—If the screen indicates PASSED, go to step 5. If the screen indicates EXECUTING, keep driving until a result comes on. If the screen indicates OUT OF CONDITION, wait for several minutes, and recheck.

5. Check the CYL1 MISFIRE, CYL2 MISFIRE, CYL3 MISFIRE, and/or CYL4 MISFIRE in the DATA LIST for 10 minutes with the HDS.

   Does CYL1 MISFIRE, CYL2 MISFIRE, CYL3 MISFIRE, and/or CYL4 MISFIRE show misfire counts?

   YES—Go to step 9.

   NO—Go to step 6.

6. Test-drive the vehicle for several minutes in the range of these recorded freeze data parameters:

   - Engine speed
   - Vehicle speed
   - Throttle position
   - CLV (calculated load value)
   - Gear position

7. Monitor the OBD STATUS for DTC P0301, P0302, P0303, or P0304 in the DTCs MENU with the HDS.

   Does the screen indicate FAILED?

   YES—Go to step 9.

   NO—If the screen indicates PASSED, go to step 8. If the screen indicates EXECUTING, keep driving until a result comes on. If the screen indicates OUT OF CONDITION, go to step 6 and recheck.

8. Check the CYL1 MISFIRE, CYL2 MISFIRE, CYL3 MISFIRE, and/or CYL4 MISFIRE in the DATA LIST for 10 minutes with the HDS.

   Does CYL1 MISFIRE, CYL2 MISFIRE, CYL3 MISFIRE, and/or CYL4 MISFIRE show misfire counts?

   YES—Go to step 9.

   NO—Intermittent failure, system is OK at this time. ■

9. Turn the ignition switch OFF.

10. Check the fuel quality.

    Is the quality good?

    YES—Go to step 11.

    NO—Drain the tank and fill it with known-good fuel, then go to step 20.

11. Inspect the spark plugs (see page 4-28). If the spark plugs are fouled or worn, replace them.

12. Test-drive the vehicle for several minutes in the range of these recorded freeze data parameters:

    - Engine speed
    - Vehicle speed
    - Throttle position
    - CLV (calculated load value)
    - Gear position

13. Check the CYL1 MISFIRE, CYL2 MISFIRE, CYL3 MISFIRE, and/or CYL4 MISFIRE in the DATA LIST for 10 minutes with the HDS.

    Does CYL1 MISFIRE, CYL2 MISFIRE, CYL3 MISFIRE, and/or CYL4 MISFIRE show misfire counts?

    YES—Go to step 14.

    NO—Go to step 20.

14. Check the fuel pressure (see page 11-363).

    Is the fuel pressure OK?

    YES—Go to step 15.

    NO—
    - If the pressure is too high, replace the fuel pressure regulator (see page 11-373), then go to step 20.
    - If the pressure is too low, check the fuel pump, the fuel feed pipe, and the fuel filter. If they are OK, replace the fuel pressure regulator (see page 11-373), then go to step 20.

15. Turn the ignition switch OFF.

16. Remove the rocker arm oil pressure switch (VTEC oil pressure switch) (A), and install the special tools as shown, then install the rocker arm oil pressure switch (VTEC oil pressure switch) (A) in the pressure gauge adapter (B).

    NOTE: Install the switch in the reverse order of removal with a new O-ring.

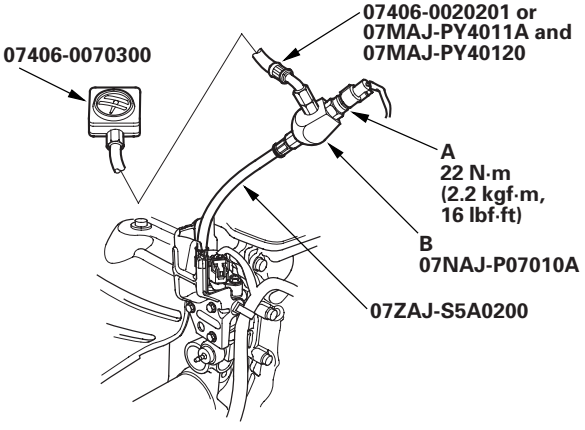

17. Reconnect the rocker arm oil pressure switch (VTEC oil pressure switch) 2P connector.

18. Start the engine. Hold the engine speed at 3,000 rpm without load (in Park or neutral) until the radiator fan comes on.

(cont'd)

DTC Troubleshooting (cont'd)

19. Check the oil pressure at engine speeds of 1,000 and 2,000 rpm. Keep the test time as short as possible (less than 1 minute) because the engine is running without load.

    Is the oil pressure below 49 kPa (0.5 kgf/cm^2, 7 psi)?

    YES—Check the fuel pressure (see page 11-363), and repair as needed, then go to step 20.

    NO—Inspect the VTEC system, then go to step 20.

20. Turn the ignition switch ON (II).

21. Reset the ECM/PCM with the HDS.

22. Clear the CKP pattern with the HDS.

23. Do the ECM/PCM idle learn procedure (see page 11-349).

24. Do the CKP pattern learn procedure (see page 11-5).

25. Test-drive the vehicle for several minutes in the range of these recorded freeze data parameters:

    - Engine speed
    - Vehicle speed
    - Throttle position
    - CLV (calculated load value)
    - Gear position

26. Check for Temporary DTCs or DTCs with the HDS.

    Are any Temporary DTCs or DTCs indicated?

    YES—If DTC P0300, P0301, P0302, P0303, or P0304 are indicated, check for poor connections or loose terminals at the ignition coil, the injector, and the ECM/PCM, then go to troubleshooting DTC P0301, P0302, P0303, or P0304 (see page 11-172). If any other Temporary DTCs or DTCs are indicated, go to the indicated DTC's troubleshooting.

    NO—Go to step 27.

27. Monitor the OBD STATUS for DTC P0301, P0302, P0303, or P0304 in the DTCs MENU with the HDS.

    Does the screen indicate PASSED?

    YES—Troubleshooting is complete. ■

    NO—If the screen indicates FAILED, go to step 1 and recheck. If the screen indicates EXECUTING, keep driving until a result comes on. If the screen indicates OUT OF CONDITION, go to step 25 and recheck.

DTC P0301: No. 1 Cylinder Misfire Detected (2002-2004 models)

DTC P0302: No. 2 Cylinder Misfire Detected (2002-2004 models)

DTC P0303: No. 3 Cylinder Misfire Detected (2002-2004 models)

DTC P0304: No. 4 Cylinder Misfire Detected (2002-2004 models)

1. After checking and recording the freeze data, reset the ECM/PCM (see page 11-4). If there is no freeze data of the misfire, just clear the DTC.

2. Start the engine, and listen for a clicking sound at the injector of the problem cylinder.

   Does it click?

   YES—Go to step 3.

   NO—Go to step 30.

3. Turn the ignition switch OFF, and reset the ECM/PCM.

4. Exchange the ignition coil from the problem cylinder with one from another cylinder.

5. Test-drive the vehicle several times in the range of the freeze data or under various conditions if there was no freeze data.

6. Check for a DTC or a Temporary DTC with a scan tool or the HDS.

   Is DTC or Temporary DTC P0301, P0302, P0303 or P0304 indicated?

   YES—Go to step 7.

   NO—Intermittent misfire due to poor contact at the ignition coil connector (no misfire at this time).■

7. Determine which cylinder(s) had the misfire.

   Does the misfire occur in the cylinder where the ignition coil was exchanged?

   YES—Replace the faulty ignition coil.■

   NO—Go to step 8.

8. Turn the ignition switch OFF, and reset the ECM/PCM.

9. Exchange the spark plug from the problem cylinder with one from another cylinder.

10. Test-drive the vehicle several times in the range of the freeze data or under various conditions if there was no freeze data.

11. Check for a DTC or a Temporary DTC with a scan tool or the HDS.

    Is DTC or Temporary DTC P0301, P0302, P0303 or P0304 indicated?

    YES—Go to step 12.

    NO—Intermittent misfire due to spark plug fouling (no misfire at this time).■

12. Determine which cylinder(s) had the misfire.

    Does the misfire occur in the cylinder where the spark plug was exchanged?

    YES—Replace the faulty spark plug.■

    NO—Go to step 13.

13. Turn the ignition switch OFF, and reset the ECM/PCM.

14. Exchange the injector from the problem cylinder with one from the another cylinder.

15. Let the engine idle for 2 minutes.

(cont'd)

DTC Troubleshooting (cont'd)

16. Test-drive the vehicle several times in the range of the freeze data or under various conditions if there was no freeze data.

17. Check for a DTC or a Temporary DTC with a scan tool or the HDS.

    Is DTC or Temporary DTC P0301, P0302, P0303 or P0304 indicated?

    YES—Go to step 18.

    NO—Intermittent misfire due to bad contact at the injector connector (no misfire at this time). ■

18. Determine which cylinder(s) had the misfire.

    Does the misfire occur in the cylinder where the injector was exchanged?

    YES—Replace the faulty injector (see page 11-277). ■

    NO—Go to step 19.

19. Turn the ignition switch OFF.

20. Disconnect the ignition coil 3P connector from the problem cylinder.

21. Turn the ignition switch ON (II).

22. Measure voltage between ignition coil 3P connector terminal No. 3 and body ground.

IGNITION COIL 3P CONNECTOR

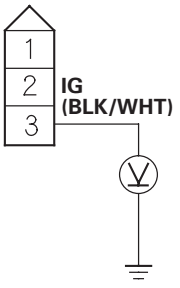

Wire side of female terminals

Is there battery voltage?

YES—Go to step 23.

NO—Repair open or short in the wire between the No. 1 IGN COIL (15 A) fuse and the ignition coil. ■

23. Turn the ignition switch OFF.

24. Check for continuity between ignition coil 3P connector terminal No. 2 and body ground.

IGNITION COIL 3P CONNECTOR

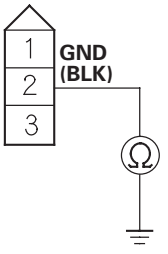

Wire side of female terminals

Is there continuity?

YES—Go to step 25.

NO—Repair open in the wire between the ignition coil and G101. ■

25. Disconnect ECM/PCM connector A (31P).

26. Check for continuity between body ground and the appropriate ECM/PCM connector terminal (see table).

ECM/PCM CONNECTOR A (31P)

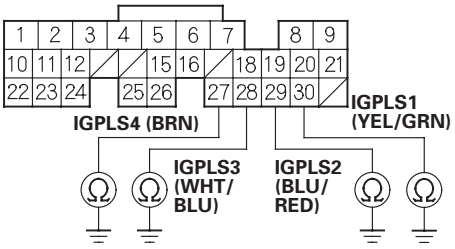

Wire side of female terminals

PROBLEM CYLINDER	DTC	ECM/PCM TERMINAL	WIRE COLOR
No. 1	P0301	A30	YEL/GRN
No. 2	P0302	A29	BLU/RED
No. 3	P0303	A28	WHT/BLU
No. 4	P0304	A27	BRN

Is there continuity?

YES—Repair short in the wire between the ECM/PCM and the ignition coil. ■

NO—Go to step 27.

27. Connect the appropriate ignition coil 3P connector terminal No. 1 and body ground with a jumper wire (see table).

IGNITION COIL 3P CONNECTOR

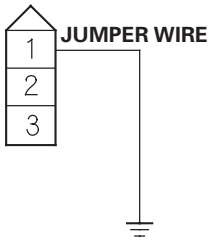

Wire side of female terminals

PROBLEM CYLINDER	DTC	WIRE COLOR
No. 1	P0301	YEL/GRN
No. 2	P0302	BLU/RED
No. 3	P0303	WHT/BLU
No. 4	P0304	BRN

28. Check for continuity between body ground and the appropriate ECM/PCM connector terminal (see table).

ECM/PCM CONNECTOR A (31P)

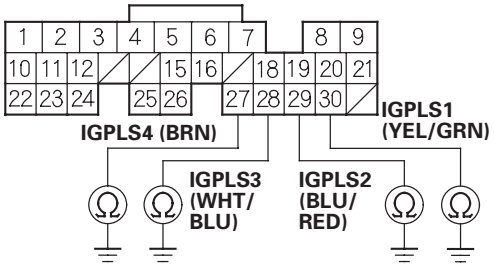

Wire side of female terminals

PROBLEM CYLINDER	DTC	ECM/PCM TERMINAL	WIRE COLOR
No. 1	P0301	A30	YEL/GRN
No. 2	P0302	A29	BLU/RED
No. 3	P0303	A28	WHT/BLU
No. 4	P0304	A27	BRN

Is there continuity?

YES—Go to step 29.

NO—Repair open in the wire between the ECM/PCM and the ignition coil. ■

29. Do an engine compression and a cylinder leakdown test.

Did the engine pass both tests?

YES—Update the ECM/PCM if it does not have the latest software, or substitute a known-good ECM/PCM (see page 11-6), then recheck. If the symptom/indication goes away with a known-good ECM/PCM, replace the original ECM/PCM (see page 11-284). ■

NO—Repair the engine. ■

30. Disconnect ECM/PCM connector B (24P).

31. Turn the ignition switch ON (II).

(cont'd)

DTC Troubleshooting (cont'd)

32. Measure voltage between body ground and the appropriate ECM/PCM connector terminal (see table).

ECM/PCM CONNECTOR B (24P)

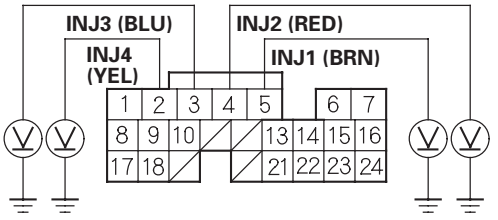

Wire side of female terminals

PROBLEM CYLINDER	DTC	ECM/PCM TERMINAL	WIRE COLOR
No. 1	P0301	B5	BRN
No. 2	P0302	B4	RED
No. 3	P0303	B3	BLU
No. 4	P0304	B2	YEL

Is there battery voltage?

YES—Go to step 33.

NO—Go to step 42.

33. Turn the ignition switch OFF.

34. Disconnect the injector 2P connector from the problem cylinder.

35. Measure resistance between injector 2P connector terminals No. 1 and No. 2.

INJECTOR 2P CONNECTOR

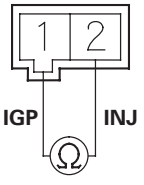

Terminal side of male terminals

Is there 10— 13 Ω ?

YES—Go to step 36.

NO—Replace the injector (see page 11-277). ■

36. Exchange the injector from the problem cylinder with one from another cylinder.

37. Reset the ECM/PCM.

38. Let the engine idle for 2 minutes.

39. Test-drive the vehicle several times in the range of the freeze data or under various conditions if there was no freeze data.

40. Check for a DTC or a Temporary DTC with a scan tool or the HDS.

Is DTC or Temporary DTC P0301, P0302, P0303, or P0304 indicated?

YES—Go to step 41.

NO—Intermittent misfire due to injector malfunction. ■

41. Determine which cylinder(s) had the misfire.

Does the misfire occur in the cylinder where the injector was exchanged?

YES—Replace the faulty injector. ■

NO—Update the ECM/PCM if it does not have the latest software, or substitute a known-good ECM/PCM (see page 11-6), then recheck. If the symptom/indication goes away with a known-good ECM/PCM, replace the original ECM/PCM (see page 11-284). ■

42. Turn the ignition switch OFF.

43. Disconnect the injector 2P connector from the problem cylinder.

44. Turn the ignition switch ON (II).

45. Measure voltage between injector 2P connector terminal No. 1 and body ground.

INJECTOR 2P CONNECTOR

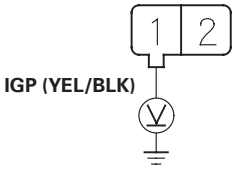

Wire side of female terminals

Is there battery voltage?

YES—Go to step 46.

NO—Repair open in the wire between the injector and the PGM-FI main relay. ■

46. Turn the ignition switch OFF.

47. Check for continuity between body ground and the appropriate ECM/PCM connector terminal (see table).

ECM/PCM CONNECTOR B (24P)

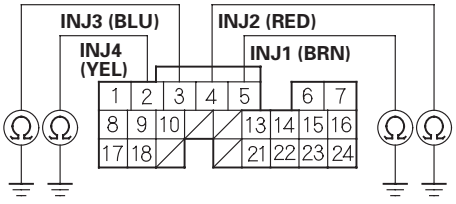

Wire side of female terminals

PROBLEM CYLINDER	DTC	ECM/PCM TERMINAL	WIRE COLOR
No. 1	P0301	B5	BRN
No. 2	P0302	B4	RED
No. 3	P0303	B3	BLU
No. 4	P0304	B2	YEL

Is there continuity?

YES—Repair short in the wire between the ECM/PCM and the injector. ■

NO—Go to step 48.

48. Connect appropriate injector 2P connector terminal No. 2 to body ground with a jumper wire (see table).

INJECTOR 2P CONNECTOR

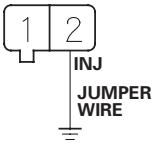

Wire side of female terminals

PROBLEM CYLINDER	DTC	WIRE COLOR
No. 1	P0301	BRN
No. 2	P0302	RED
No. 3	P0303	BLU
No. 4	P0304	YEL

49. Check for continuity between body ground and the appropriate ECM/PCM connector terminal (see table).

ECM/PCM CONNECTOR B (24P)

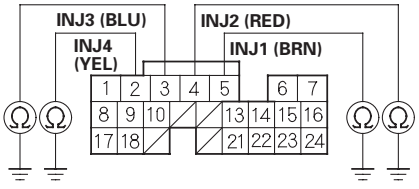

Wire side of female terminals

PROBLEM CYLINDER	DTC	ECM/PCM TERMINAL	WIRE COLOR
No. 1	P0301	B5	BRN
No. 2	P0302	B4	RED
No. 3	P0303	B3	BLU
No. 4	P0304	B2	YEL

Is there continuity?

YES—Replace the injector (see page 11-277), then recheck. ■

NO—Repair open in the wire between the ECM/PCM and the injector. ■

DTC Troubleshooting (cont'd)

DTC P0301: No. 1 Cylinder Misfire Detected (2005-2006 models)

DTC P0302: No. 2 Cylinder Misfire Detected (2005-2006 models)

DTC P0303: No. 3 Cylinder Misfire Detected (2005-2006 models)

DTC P0304: No. 4 Cylinder Misfire Detected (2005-2006 models)

1. Record all freeze data and on-board snapshots with the HDS.

2. Clear the DTC with the HDS.

3. Start the engine (in Park or neutral), then let it idle without load.

4. Monitor the OBD STATUS for DTC P0301, P0302, P0303, or P0304 in the DTCs MENU with the HDS.

   Does the screen indicate FAILED?

   YES—Go to step 9.

   NO—If the screen indicates PASSED, go to step 5. If the screen indicates EXECUTING, keep driving until a result comes on. If the screen indicates OUT OF CONDITION, wait for several minutes, and recheck.

5. Check the CYL1 MISFIRE, CYL2 MISFIRE, CYL3 MISFIRE, and/or CYL4 MISFIRE in the DATA LIST for 10 minutes with the HDS.

   Does CYL1 MISFIRE, CYL2 MISFIRE, CYL3 MISFIRE, and/or CYL4 MISFIRE show misfire counts?

   YES—Go to step 9.

   NO—Go to step 6.

6. Test-drive the vehicle for several minutes in the range of these recorded freeze data parameters:

   - Engine speed
   - Vehicle speed
   - Throttle position
   - CLV (calculated load value)
   - Gear position

7. Monitor the OBD STATUS for DTC P0301, P0302, P0303, or P0304 in the DTCs MENU with the HDS.

   Does the screen indicate FAILED?

   YES—Go to step 9.

   NO—If the screen indicates PASSED, go to step 8. If the screen indicates EXECUTING, keep driving until a result comes on. If the screen indicates OUT OF CONDITION, go to step 6 and recheck.

8. Check the CYL1 MISFIRE, CYL2 MISFIRE, CYL3 MISFIRE, and/or CYL4 MISFIRE in the DATA LIST for 10 minutes with the HDS.

   Does CYL1 MISFIRE, CYL2 MISFIRE, CYL3 MISFIRE, and/or CYL4 MISFIRE show misfire counts?

   YES—Go to step 9.

   NO—Intermittent failure, system is OK at this time. ■

9. Turn the ignition switch OFF.

10. Remove the intake manifold cover (see step 1 on page 9-3).

11. Start the engine, and listen for a clicking sound at the injector of the problem cylinder.

    Does the injector click?

    YES—Go to step 12.

    NO—Go to step 43.

12. Turn the ignition switch OFF.

13. Exchange the ignition coil from the problem cylinder with one from another cylinder.

14. Test-drive the vehicle for several minutes in the range of these recorded freeze data parameters:

    - Engine speed
    - Vehicle speed
    - Throttle position
    - CLV (calculated load value)
    - Gear position

15. Check the CYL1 MISFIRE, CYL2 MISFIRE, CYL3 MISFIRE, and/or CYL4 MISFIRE in the DATA LIST for 10 minutes with the HDS.

    Does CYL1 MISFIRE, CYL2 MISFIRE, CYL3 MISFIRE, and/or CYL4 MISFIRE show misfire counts?

    YES—Go to step 16.

    NO—Intermittent misfire due to poor contact at the ignition coil connector (no misfire at this time). Make sure the coil connections are secure. ■

16. Determine which cylinder had the misfire.

    Does the misfire occur in the cylinder where the ignition coil was moved?

    YES—Replace the faulty ignition coil (see page 4-26), then go to step 63.

    NO—Go to step 17.

17. Turn the ignition switch OFF.

18. Exchange the spark plug from the problem cylinder with one from another cylinder.

19. Test-drive the vehicle for several minutes in the range of these recorded freeze data parameters:

    - Engine speed
    - Vehicle speed
    - Throttle position
    - CLV (calculated load value)
    - Gear position

20. Check the CYL1 MISFIRE, CYL2 MISFIRE, CYL3 MISFIRE, and/or CYL4 MISFIRE in the DATA LIST for 10 minutes with the HDS.

    Does CYL1 MISFIRE, CYL2 MISFIRE, CYL3 MISFIRE, and/or CYL4 MISFIRE show misfire counts?

    YES—Go to step 21.

    NO—Intermittent misfire due to spark plug fouling (no misfire at this time). ■

21. Determine which cylinder had the misfire.

    Does the misfire occur in the cylinder where the spark plug was moved?

    YES—Replace the faulty spark plug, then go to step 63.

    NO—Go to step 22.

22. Turn the ignition switch OFF.

23. Exchange the injector from the problem cylinder with one from another cylinder.

24. Start the engine, and let it idle for 2 minutes.

25. Test-drive the vehicle for several minutes in the range of these recorded freeze data parameters:

    - Engine speed
    - Vehicle speed
    - Throttle position
    - CLV (calculated load value)
    - Gear position

26. Check the CYL1 MISFIRE, CYL2 MISFIRE, CYL3 MISFIRE, and/or CYL4 MISFIRE in the DATA LIST for 10 minutes with the HDS.

    Does CYL1 MISFIRE, CYL2 MISFIRE, CYL3 MISFIRE, and/or CYL4 MISFIRE show misfire counts?

    YES—Go to step 27.

    NO—Intermittent misfire due to bad contact in the injector connector (no misfire at this time). Check for poor connections or loose terminals at the injector. ■

(cont'd)

DTC Troubleshooting (cont'd)

27. Determine which cylinder had the misfire.

    Does the misfire occur in the cylinder where the injector was moved?

    YES—Replace the faulty injector (see page 11-277), then go to step 63.

    NO—Go to step 28.

28. Turn the ignition switch OFF.

29. Disconnect the ignition coil 3P connector from the problem cylinder.

30. Turn the ignition switch ON (II).

31. Measure voltage between ignition coil 3P connector terminal No. 3 and body ground.

IGNITION COIL 3P CONNECTOR

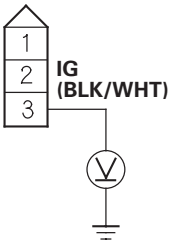

Wire side of female terminals

Is there battery voltage?

YES—Go to step 32.

NO—Repair open in the wire between the ignition coil and the ignition coil relay, then go to step 63.

32. Turn the ignition switch OFF.

33. Check for continuity between ignition coil 3P connector terminal No. 2 and body ground.

IGNITION COIL 3P CONNECTOR

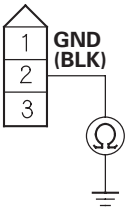

Wire side of female terminals

Is there continuity?

YES—Go to step 34.

NO—Repair open in the wire between the ignition coil and G101, then go to step 63.

34. Turn the ignition switch OFF.

35. Jump the SCS line with the HDS.

36. Disconnect ECM/PCM connector A (31P).

37. Check for continuity between body ground and the appropriate ECM/PCM connector terminal (see table).

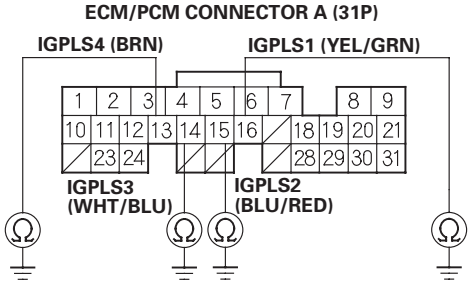

Wire side of female terminals

PROBLEM CYLINDER	DTC	ECM/PCM TERMINAL	WIRE COLOR
No. 1	P0301	A16	YEL/GRN
No. 2	P0302	A15	BLU/RED
No. 3	P0303	A14	WHT/BLU
No. 4	P0304	A13	BRN

Is there continuity?

YES—Repair short in the wire between the ECM/PCM and the ignition coil, then go to step 63.

NO—Go to step 38.

38. Connect appropriate ignition coil 3P connector terminal No. 1 to body ground with a jumper wire (see table).

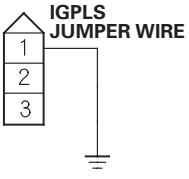

Wire side of female terminals

PROBLEM CYLINDER	DTC	WIRE COLOR
No. 1	P0301	YEL/GRN
No. 2	P0302	BLU/RED
No. 3	P0303	WHT/BLU
No. 4	P0304	BRN

39. Check for continuity between body ground and the appropriate ECM/PCM connector terminal (see table).

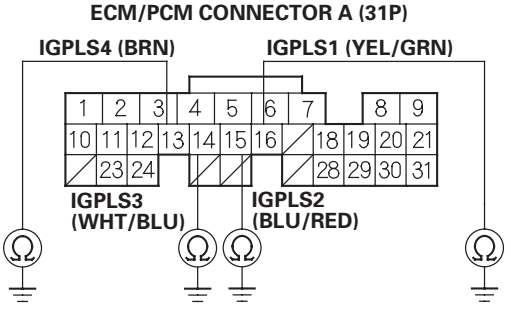

Wire side of female terminals

PROBLEM CYLINDER	DTC	ECM/PCM TERMINAL	WIRE COLOR
No. 1	P0301	A16	YEL/GRN
No. 2	P0302	A15	BLU/RED
No. 3	P0303	A14	WHT/BLU
No. 4	P0304	A13	BRN

Is there continuity?

YES—Go to step 40.

NO—Repair open in the wire between the ECM/PCM and the ignition coil, then go to step 63.

40. Reconnect the ignition coil 3P connector and ECM/PCM connector A (31P).

41. Do an engine compression and a cylinder leakdown test.

Did the engine pass both tests?

YES—Go to step 42.

NO—Repair the engine, then go to step 63.

42. Do the VTEC rocker arm test (see page 6-7).

Did the VTEC rocker arm pass the test?

YES—Go to step 72.

NO—Repair as necessary, then go to step 63.

(cont'd)

DTC Troubleshooting (cont'd)

43. Turn the ignition switch OFF.

44. Jump the SCS line with the HDS.

45. Disconnect ECM/PCM connector B (24P).

46. Turn the ignition switch ON (II).

47. Measure voltage between body ground and the appropriate ECM/PCM connector terminal (see table).

ECM/PCM CONNECTOR B (24P)

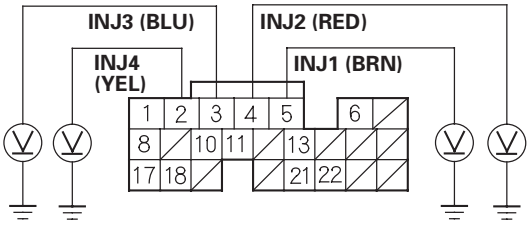

Wire side of female terminals

PROBLEM CYLINDER	DTC	ECM/PCM TERMINAL	WIRE COLOR
No. 1	P0301	B5	BRN
No. 2	P0302	B4	RED
No. 3	P0303	B3	BLU
No. 4	P0304	B2	YEL

Is there battery voltage?

YES—Go to step 57.

NO—Go to step 48.

48. Turn the ignition switch OFF.

49. Remove the intake manifold cover (see step 1 on page 9-3).

50. Disconnect the injector 2P connector from the problem cylinder.

51. Turn the ignition switch ON (II).

52. Measure voltage between injector 2P connector terminal No. 1 and body ground.

INJECTOR 2P CONNECTOR

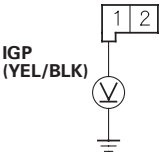

Wire side of female terminals

Is there battery voltage?

YES—Go to step 53.

NO—Repair open in the wire between the injector and the PGM-FI main relay, then go to step 63.

53. Turn the ignition switch OFF.

54. Check for continuity between body ground and the appropriate ECM/PCM connector terminal (see table).

ECM/PCM CONNECTOR B (24P)

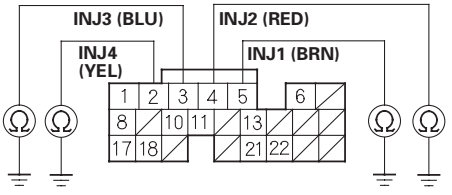

Wire side of female terminals

PROBLEM CYLINDER	DTC	ECM/PCM TERMINAL	WIRE COLOR
No. 1	P0301	B5	BRN
No. 2	P0302	B4	RED
No. 3	P0303	B3	BLU
No. 4	P0304	B2	YEL

Is there continuity?

YES—Repair short in the wire between the ECM/PCM and the injector, then go to step 63.

NO—Go to step 55.

55. Connect appropriate injector 2P connector terminal No. 2 to body ground with a jumper wire (see table).

INJECTOR 2P CONNECTOR

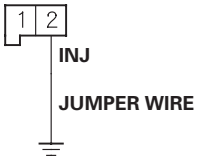

Wire side of female terminals

PROBLEM CYLINDER	DTC	WIRE COLOR
No. 1	P0301	BRN
No. 2	P0302	RED
No. 3	P0303	BLU
No. 4	P0304	YEL

56. Check for continuity between body ground and the appropriate ECM/PCM connector terminal (see table).

ECM/PCM CONNECTOR B (24P)

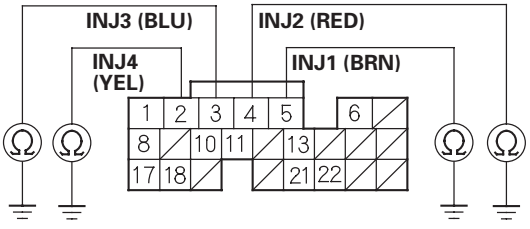

Wire side of female terminals

PROBLEM CYLINDER	DTC	ECM/PCM TERMINAL	WIRE COLOR
No. 1	P0301	B5	BRN
No. 2	P0302	B4	RED
No. 3	P0303	B3	BLU
No. 4	P0304	B2	YEL

Is there continuity?

YES—Go to step 57.

NO—Repair open in the wire between the ECM/PCM and the injector, then go to step 63.

57. Measure resistance between injector 2P connector terminals No. 1 and No. 2.

INJECTOR 2P CONNECTOR

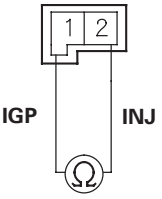

Terminal side of male terminals

Is there 10— 13 Ω ?

YES—Go to step 58.

NO—Replace the injector (see page 11-277), then go to step 63.

58. Substitute a known-good injector from another cylinder to the problem cylinder.

59. Reconnect ECM/PCM connector B (24P).

60. Start the engine, and let it idle for 2 minutes.

61. Test-drive the vehicle for several minutes in the range of these recorded freeze data parameters:

- Engine speed
- Vehicle speed
- Throttle position
- CLV (calculated load value)
- Gear position

62. Check the CYL1 MISFIRE, CYL2 MISFIRE, CYL3 MISFIRE, and/or CYL4 MISFIRE in the DATA LIST for 10 minutes with the HDS.

Does CYL1 MISFIRE, CYL2 MISFIRE, CYL3 MISFIRE, and/or CYL4 MISFIRE show misfire counts?

YES—Go to step 72.

NO—Replace the original injector (see page 11-277), then go to step 63.

(cont'd)

DTC Troubleshooting (cont'd)

63. Reconnect all connectors.

64. Turn the ignition switch ON (II).

65. Reset the ECM/PCM with the HDS.

66. Clear the CKP pattern with the HDS.

67. Do the ECM/PCM idle learn procedure (see page 11-349).

68. Do the CKP pattern learn procedure (see page 11-5).

69. Test-drive the vehicle for several minutes in the range of these recorded freeze data parameters:

    - Engine speed
    - Vehicle speed
    - Throttle position
    - CLV (calculated load value)
    - Gear position

70. Check for Temporary DTCs or DTCs with the HDS.

    Are any Temporary DTCs or DTCs indicated?

    YES—If DTC P0301,P0302, P0303, or P0304 are indicated, check for poor connections or loose terminals at the ignition coil, the injector, and the ECM/PCM, then go to troubleshooting DTC P0300, P0301, P0302, P0303, or P0304 (see page 11-164). If any other Temporary DTCs or DTCs are indicated, go to the indicated DTC's toubleshooting.

    NO—Go to step 71.

71. Monitor the OBD STATUS for DTC P0301, P0302, P0303, or P0304 in the DTCs MENU with the HDS.

    Does the screen indicate PASSED?

    YES—Troubleshooting is complete. ■

    NO—If the screen indicates FAILED, go to step 1 and recheck. If the screen indicates EXECUTING, keep driving until a result comes on. If the screen indicates OUT OF CONDITION, go to step 69 and recheck.

72. Update the ECM/PCM if it does not have the latest software, or substitute a known-good ECM/PCM (see page 11-6).

73. Test-drive the vehicle for several minutes in the range of the recorded freeze data.

74. Check for Temporary DTCs or DTCs with the HDS.

    Are any Temporary DTCs or DTCs indicated?

    YES—If DTC P0301, P0302, P0303, or P0304 are indicated, check for poor connections or loose terminals at the injector, the ignition coil, and the ECM/PCM, then go to step 1. If any other Temporary DTCs or DTCs are indicated, go to the indicated DTC's troubleshooting.

    NO—If the ECM/PCM was updated, troubleshooting is complete. If the ECM/PCM was substituted, replace the original ECM/PCM (see page 11-284). ■

DTC P0325: Knock Sensor Circuit Malfunction (2002-2004 models)

NOTE: Information marked with ∗1 applies to K20A3 engine; ∗2 applies to K20A2 engine.

1. Reset the ECM/PCM (see page 11-4).

2. Start the engine. Hold the engine speed at 3,000 rpm without load (in Park or neutral) until the radiator fan comes on, then let it idle.

3. Hold the engine speed at 3,000—4,000 rpm for at least 10 seconds.

   Is DTC P0325 indicated?

   YES—Go to step 4.

   NO—Intermittent failure, system is OK at this time. Check for poor connections or loose terminals at the knock sensor and the ECM/PCM.

4. Turn the ignition switch OFF.

5. Disconnect the starter subharness 8P∗1 (6P)∗2 connector.

6. Check for continuity between ECM/PCM connector terminal A9 and body ground.

ECM/PCM CONNECTOR A (31P)

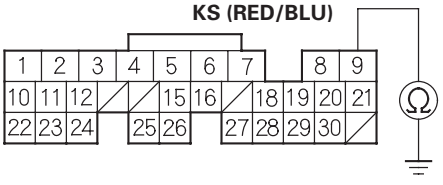

Wire side of female terminals

Is there continuity?

YES—Repair short in the wire between the ECM/PCM (A9) and the starter subharness 8P∗1 (6P)∗2 connector.■

NO—Go to step 7.

7. Connect engine wire harness 8P∗1 (6P)∗2 connector terminal No. 7∗1 (No. 5)∗2 to body ground with a jumper wire.

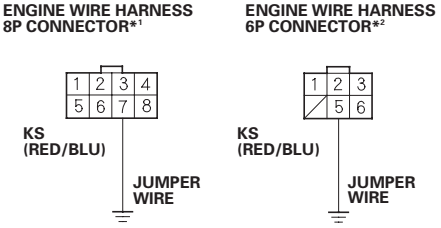

Wire side of female terminals

8. Check for continuity between body ground and ECM/PCM connector terminal A9.

ECM/PCM CONNECTOR A (31P)

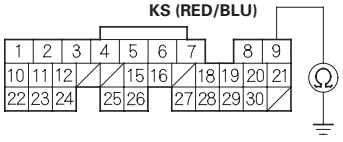

Wire side of female terminals

Is there continuity?

YES—Go to step 9.

NO—Repair open in the wire between the ECM/PCM (A9) and the starter subharness 8P∗1 (6P)∗2 connector.■

9. Check the starter subharness between 8P∗1 (6P)∗2 connector and the knock sensor for an open or short. If it's OK, substitute a known-good knock sensor and recheck.

   Is DTC P0325 indicated?

   YES—Update the ECM/PCM if it does not have the latest software, or substitute a known-good ECM/PCM (see page 11-6), then recheck. If the symptom/indication goes away with a known-good ECM/PCM, replace the original ECM/PCM (see page 11-284).■

   NO—Replace the original knock sensor and/or starter subharness, K20A2 engine (see page 11-282), K20A3 engine (see page 11-282).■

DTC Troubleshooting (cont'd)

DTC P0325: Knock Sensor Circuit Malfunction (2005-2006 models)

1. Turn the ignition switch ON (II).
2. Clear the DTC with the HDS.
3. Start the engine. Hold the engine speed at 3,000 rpm without load (in Park or neutral) until the radiator fan comes on, then let it idle.
4. Hold the engine speed at 3,000—4,000 rpm for at least 10 seconds.
5. Check for Temporary DTCs or DTCs with the HDS.

   Is DTC P0325 indicated?

   YES—Go to step 6.

   NO—Intermittent failure, system is OK at this time. Check for poor connections or loose terminals at the knock sensor and the ECM/PCM.■

6. Turn the ignition switch OFF.
7. Jump the SCS line with the HDS.
8. Disconnect the knock sensor 1P connector.
9. Disconnect ECM/PCM connector A (31P).
10. Check for continuity between ECM/PCM connector terminal A1 and body ground.

ECM/PCM CONNECTOR A (31P)

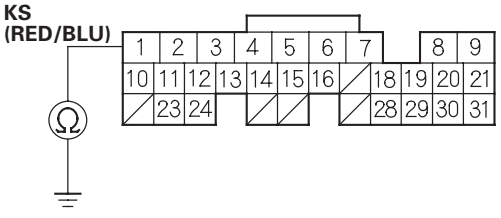

Wire side of female terminals

Is there continuity?

YES—Repair short in the wire between the ECM/PCM (A1) and the knock sensor, then go to step 14.

NO—Go to step 11.

11. Connect the knock sensor 1P connector terminal to body ground with a jumper wire.

KNOCK SENSOR 1P CONNECTOR

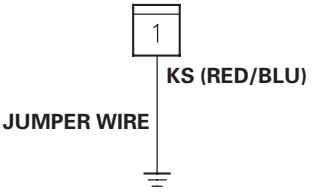

Wire side of female terminals

12. Check for continuity between ECM/PCM connector terminal A1 and body ground.

ECM/PCM CONNECTOR A (31P)

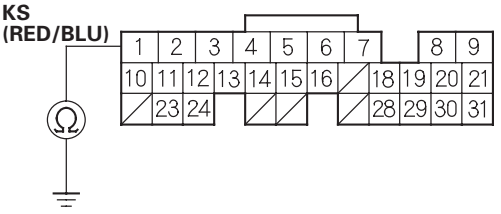

Wire side of female terminals

Is there continuity?

YES—Go to step 13.

NO—Repair open in the wire between the ECM/PCM (A1) and the knock sensor, then go to step 14.

13. Replace the knock sensor, K20Z1 engine (see page 11-282), K20A3 engine (see page 11-282).

14. Reconnect all connectors.

15. Turn the ignition switch ON (II).

16. Reset the ECM/PCM with the HDS.

17. Do the ECM/PCM idle learn procedure (see page 11-349).

18. Hold the engine speed at 3,000—4,000 rpm for at least 10 seconds.

19. Check for Temporary DTCs or DTCs with the HDS.

    Are any Temporary DTCs or DTCs indicated?

    YES—Go to step 21.

    NO—Go to step 20.

20. Monitor the OBD STATUS for DTC P0325 in the DTCs MENU with the HDS.

    Does the screen indicate PASSED?

    YES—Troubleshooting is complete. ■

    NO—If the screen indicates FAILED, go to step 1 and recheck. If the screen indicates NOT COMPLETED, go to step 17 and recheck.

21. Update the ECM/PCM if it does not have the latest software, or substitute a known-good ECM/PCM (see page 11-6).

22. Hold the engine speed at 3,000—4,000 rpm for at least 10 seconds.

23. Check for Temporary DTCs or DTCs with the HDS.

    Are any Temporary DTCs or DTCs indicated?

    YES—If DTC P0325 is indicated, check for poor connections or loose terminals at the knock sensor and the ECM/PCM, then go to step 1. If any other Temporary DTCs or DTCs are indicated, go to the indicated DTC's troubleshooting.

    NO—If the ECM/PCM was updated, troubleshooting is complete. If the ECM/PCM was substituted, replace the original ECM/PCM (see page 11-284). ■

DTC Troubleshooting (cont'd)

DTC P0335: CKP Sensor No Signal (2002-2004 models)

DTC P0336: CKP Sensor Circuit Intermittent Interruption (2002-2003 models)

DTC P0339: CKP Sensor Circuit Intermittent Interruption (2004 model)

NOTE:
- Information marked with an asterisk (*) applies to 2002-2004 models.
- Information marked with double asterisk (**) applies to 2002-2003 models.
- Information marked with triple asterisk (***) applies to 2004 model.

1. Reset the ECM/PCM (see page 11-4).

2. Start the engine.

   Is DTC P0335 and/or (P0336)** (P0339)*** indicated?*

   YES—Go to step 3.

   NO—Intermittent failure, system is OK at this time. Check for poor connections or loose terminals at the CKP sensor and the ECM/PCM.■

3. Turn the ignition switch OFF.

4. Disconnect the CKP sensor 3P connector.

5. Turn the ignition switch ON (II).

6. Measure voltage between CKP sensor 3P connector terminal No. 3 and body ground.

CKP SENSOR 3P CONNECTOR

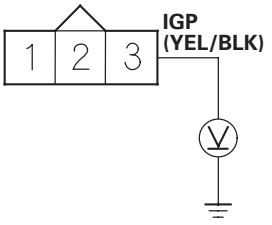

Wire side of female terminals

Is there battery voltage?

YES—Go to step 7.

NO—Repair open in the wire between PGM-FI main relay 1 and the CKP sensor.■

7. Measure voltage between CKP sensor 3P connector terminal No. 1 and body ground.

CKP SENSOR 3P CONNECTOR

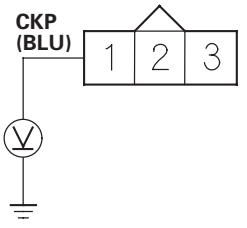

Wire side of female terminals

Is there about 5 V?

YES—Go to step 8.

NO—Go to step 10.

8. Measure voltage between CKP sensor 3P connector terminals No. 2 and No. 3.

CKP SENSOR 3P CONNECTOR

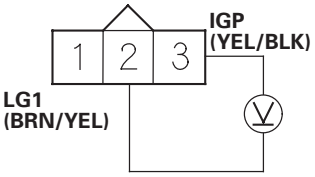

Wire side of female terminals

Is there battery voltage?

YES—Go to step 9.

NO—Repair open in the wire between the CKP sensor and G101. ■

9. Substitute a known-good CKP sensor and recheck.

Is DTC P0335 and/or (P0336)** (P0339)*** indicated?*

YES—Update the ECM/PCM if it does not have the latest software, or substitute a known-good ECM/PCM (see page 11-6), then recheck. If the symptom/indication goes away with a known-good ECM/PCM, replace the original ECM/PCM (see page 11-284). ■

NO—Replace the original CKP sensor (see page 11-280). ■

10. Measure voltage between ECM/PCM connector terminal A7 and body ground.

ECM/PCM CONNECTOR A (31P)

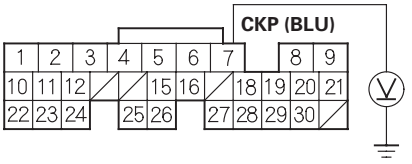

Wire side of female terminals

Is there about 5 V?

YES—Repair open in the wire between the ECM/PCM (A7) and the CKP sensor. ■

NO—Go to step 11.

11. Turn the ignition switch OFF.

12. Disconnect ECM/PCM connector A (31P).

13. Check for continuity between ECM/PCM connector terminal A7 and body ground.

ECM/PCM CONNECTOR A (31P)

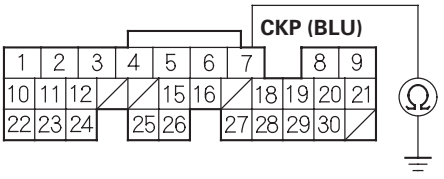

Wire side of female terminals

Is there continuity?

YES—Repair short in the wire between the ECM/PCM (A7) and the CKP sensor. ■

NO—Update the ECM/PCM if it does not have the latest software, or substitute a known-good ECM/PCM (see page 11-6), then recheck. If the symptom/indication goes away with a known-good ECM/PCM, replace the original ECM/PCM (see page 11-284). ■

DTC Troubleshooting (cont'd)

DTC P0335: CKP Sensor No Signal (2005-2006 models)

1. Turn the ignition switch ON (II).
2. Clear the DTC with the HDS.
3. Start the engine.
4. Check for Temporary DTCs or DTCs with the HDS.

   Is DTC P0335 indicated?

   YES—Go to step 5.

   NO—Intermittent failure, system is OK at this time. Check for poor connections or loose terminals at the CKP sensor and the ECM/PCM.■

5. Turn the ignition switch OFF.
6. Disconnect the CKP sensor 3P connector.
7. Turn the ignition switch ON (II).
8. Measure voltage between CKP sensor 3P connector terminal No. 3 and body ground.

CKP SENSOR 3P CONNECTOR

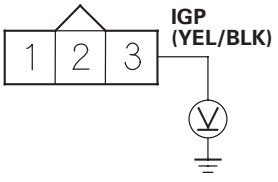

Wire side of female terminals

Is there battery voltage?

YES—Go to step 9.

NO—Repair open in the wire between the CKP sensor and PGM-FI main relay 1 (FI MAIN), then go to step 18.

9. Measure voltage between CKP sensor 3P connector terminal No. 1 and body ground.

CKP SENSOR 3P CONNECTOR

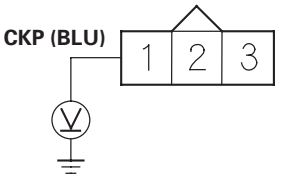

Wire side of female terminals

Is there about 5 V?

YES—Go to step 10.

NO—Go to step 11.

10. Measure voltage between CKP sensor 3P connector terminals No. 2 and No. 3.

CKP SENSOR 3P CONNECTOR

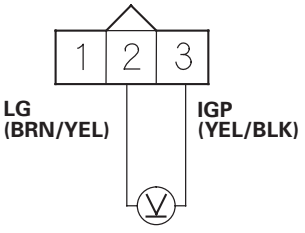

Wire side of female terminals

Is there battery voltage?

YES—Go to step 16.

NO—Repair open in the wire between the CKP sensor and G101, then go to step 18.

11. Measure voltage between ECM/PCM connector terminal A7 and body ground.

ECM/PCM CONNECTOR A (31P)

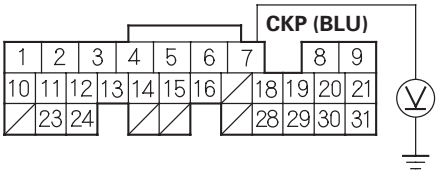

Wire side of female terminals

Is there about 5 V?

YES—Repair open in the wire between the ECM/PCM (A7) and the CKP sensor, then go to step 18.

NO—Go to step 12.

12. Turn the ignition switch OFF.

13. Jump the SCS line with the HDS.

14. Disconnect ECM/PCM connector A (31P).

15. Check for continuity between ECM/PCM connector terminal A7 and body ground.

ECM/PCM CONNECTOR A (31P)

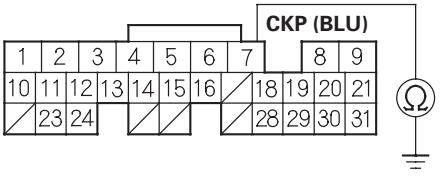

Wire side of female terminals

Is there continuity?

YES—Repair short in the wire between the ECM/PCM (A7) and the CKP sensor, then go to step 18.

NO—Go to step 25.

16. Turn the ignition switch OFF.

17. Replace the CKP sensor (see page 11-280), then go to step 18.

18. Reconnect all connectors.

19. Turn the ignition switch ON (II).

20. Reset the ECM/PCM with the HDS.

21. Clear the CKP pattern with the HDS.

22. Do the ECM/PCM idle learn procedure (see page 11-349).

23. Do the CKP pattern learn procedure (see page 11-5).

24. Check for Temporary DTCs or DTCs with the HDS.

Are any Temporary DTCs or DTCs indicated?

YES—If DTC P0335 is indicated, check for poor connections or loose terminals at the CKP sensor and the ECM/PCM, then go to step 1. If any other Temporary DTCs or DTCs are indicated, go to the indicated DTC's troubleshooting.

NO—Troubleshooting is complete. ■

25. Update the ECM/PCM if it does not have the latest software, or substitute a known-good ECM/PCM (see page 11-6).

26. Check for Temporary DTCs or DTCs with the HDS.

Are any Temporary DTCs or DTCs indicated?

YES—If DTC P0335 is indicated, check for poor connections or loose terminals at the CKP sensor and the ECM/PCM, then go to step 1. If any other Temporary DTCs or DTCs are indicated, go to the indicated DTC's troubleshooting.

NO—If the ECM/PCM was updated, troubleshooting is complete. If the ECM/PCM was substituted, replace the original ECM/PCM (see page 11-284). ■

DTC Troubleshooting (cont'd)

DTC P0339: CKP Sensor Circuit Intermittent Interruption
(2005-2006 models)

1. Record all freeze data and on-board snapshots with the HDS.

2. Clear the DTC with the HDS.

3. Start the engine, and let it idle for 10 seconds.

4. Check the CKP NOISE COUNT in the DATA LIST with the HDS.

   Are 0 counts indicated?

   YES—Go to step 7.

   NO—Go to step 5.

5. Test-drive the vehicle for several minutes in the range of these recorded freeze data parameters:

   - Engine speed
   - Vehicle speed

6. Check the CKP NOISE COUNT in the DATA LIST with the HDS.

   Are 0 counts indicated?

   YES—Go to step 7.

   NO—Intermittent failure, system is OK at this time. Check for poor connections or loose terminals at the CKP sensor and the ECM/PCM. ■

7. Check for poor or loose connections and terminals at the following:

   - CKP sensor
   - ECM/PCM
   - Engine ground
   - Body ground

   Are the connections and terminals OK?

   YES—Go to step 8.

   NO—Repair the connectors or terminals, then go to step 11.

8. Remove the cam chain case (see page 6-14), and check the CKP sensor pulse plate for damage.

   Is the pulse plate damaged?

   YES—Replace the CKP sensor pulse plate, then go to step 11.

   NO—Go to step 9.

9. Turn the ignition switch OFF.

10. Replace the CKP sensor (see page 11-280).

11. Turn the ignition switch ON (II).

12. Reset the ECM/PCM with the HDS.

13. Clear the CKP pattern with the HDS.

14. Do the ECM/PCM idle learn procedure (see page 11-349).

15. Do the CKP pattern learn procedure (see page 11-5).

16. Start the engine, and let it idle for 10 seconds.

17. Check for Temporary DTCs or DTCs with the HDS.

    Are any Temporary DTCs or DTCs indicated?

    YES—If DTC P0339 is indicated, check for poor connections or loose terminals at the CKP sensor and the ECM/PCM, then go to step 1. If any other Temporary DTCs or DTCs are indicated, go to the indicated DTC's troubleshooting.

    NO—Troubleshooting is complete. ■

DTC P0365: CMP Sensor B No Signal (2004 model)

DTC P0369: CMP Sensor B Circuit Intermittent Interruption (2004 model)

DTC P1361: CMP Sensor B Circuit Intermittent Interruption (2002-2003 models)

DTC P1362: CMP Sensor B No Signal (2002-2003 models)

NOTE:
- Information marked with an asterisk (*) applies to 2004 model.
- Information marked with double asterisk (* *) applies to 2002-2003 models.

1. Reset the ECM/PCM (see page 11-4).

2. Start the engine.

   Is DTC P1361 * (P0365)* and/or P1362* * (P0369)* indicated?*

   YES—Go to step 3.

   NO—Intermittent failure, system is OK at this time. Check for poor connections or loose terminals at CMP sensor B and the ECM/PCM. ■

3. Turn the ignition switch OFF.

4. Disconnect the CMP sensor B 3P connector.

5. Turn the ignition switch ON (II).

6. Measure voltage between CMP sensor B 3P connector terminal No. 3 and body ground.

CMP SENSOR B 3P CONNECTOR

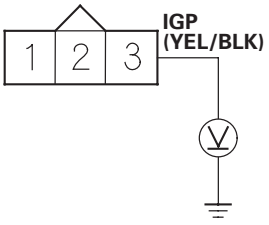

Wire side of female terminals

Is there battery voltage?

YES—Go to step 7.

NO—Repair open in the wire between PGM-FI main relay 1 (FI MAIN) and CMP sensor B. ■

7. Measure voltage between CMP sensor B 3P connector terminal No. 1 and body ground.

CMP SENSOR B 3P CONNECTOR

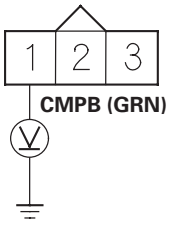

Wire side of female terminals

Is there about 5 V?

YES—Go to step 8.

NO—Go to step 10.

(cont'd)

DTC Troubleshooting (cont'd)

8. Measure voltage between CMP sensor B 3P connector terminals No. 2 and No. 3.

CMP SENSOR B 3P CONNECTOR

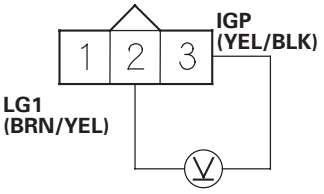

Wire side of female terminals

Is there battery voltage?

YES—Go to step 9.

NO—Repair open in the wire between CMP sensor B and G101.■

9. Substitute a known-good CMP sensor B and recheck.

*Is DTC P1361** (P0365)* and/or P1362** (P0369)* indicated?*

YES—Update the ECM/PCM if it does not have the latest software, or substitute a known-good ECM/PCM (see page 11-6), then recheck. If the symptom/indication goes away with a known-good ECM/PCM, replace the original ECM/PCM (see page 11-284).■

NO—Replace original CMP sensor B (see page 11-281).■

10. Measure voltage between ECM/PCM connector terminal A26 and body ground.

ECM/PCM CONNECTOR A (31P)

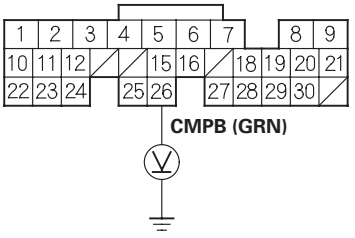

Wire side of female terminals

Is there about 5 V?

YES—Repair open in the wire between the ECM/PCM (A26) and CMP sensor B.■

NO—Go to step 11.

11. Turn the ignition switch OFF.

12. Disconnect ECM/PCM connector A (31P).

13. Check for continuity between ECM/PCM connector terminal A26 and body ground.

ECM/PCM CONNECTOR A (31P)

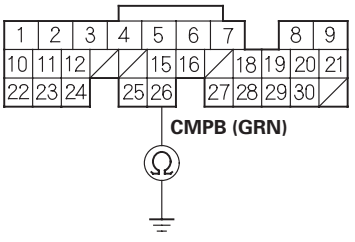

Wire side of female terminals

Is there continuity?

YES—Repair short in the wire between the ECM/PCM (A26) and CMP sensor B.■

NO—Update the ECM/PCM if it does not have the latest software, or substitute a known-good ECM/PCM (see page 11-6), then recheck. If the symptom/indication goes away with a known-good ECM/PCM, replace the original ECM/PCM (see page 11-284).■

DTC P0365: CMP Sensor B No Signal (2005-2006 models)

1. Turn the ignition switch ON (II).
2. Clear the DTC with the HDS.
3. Start the engine.
4. Check for Temporary DTCs or DTCs with the HDS.

   Is DTC P0365 indicated?

   YES—Go to step 5.

   NO—Intermittent failure, system is OK at this time. Check for poor connections or loose terminals at CMP sensor B and the ECM/PCM.■

5. Turn the ignition switch OFF.
6. Disconnect the CMP sensor B 3P connector.
7. Turn the ignition switch ON (II).
8. Measure voltage between CMP sensor B 3P connector terminal No. 3 and body ground.

CMP SENSOR B 3P CONNECTOR

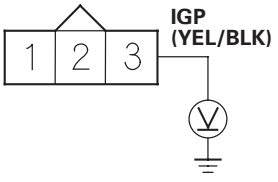

Wire side of female terminals

Is there battery voltage?

YES—Go to step 9.

NO—Repair open in the wire between CMP sensor B and PGM-FI main relay 1 (FI MAIN), then go to step 18.

9. Measure voltage between CMP sensor B 3P connector terminal No. 1 and body ground.

CMP SENSOR B 3P CONNECTOR

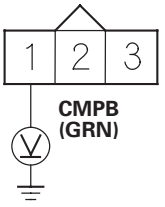

Wire side of female terminals

Is there about 5 V?

YES—Go to step 10.

NO—Go to step 11.

10. Measure voltage between CMP sensor B 3P connector terminals No. 2 and No. 3.

CMP SENSOR B 3P CONNECTOR

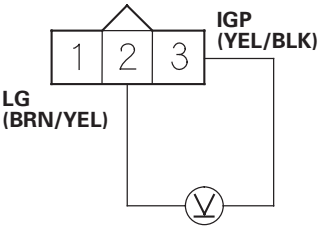

Wire side of female terminals

Is there battery voltage?

YES—Go to step 16.

NO—Repair open in the wire between CMP sensor B and G101, then go to step 18.

(cont'd)

DTC Troubleshooting (cont'd)

11. Measure voltage between ECM/PCM connector terminal A6 and body ground.

ECM/PCM CONNECTOR A (31P)

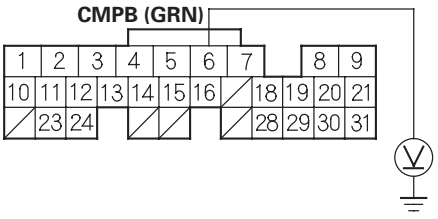

Wire side of female terminals

Is there about 5 V?

YES—Repair open in the wire between the ECM/PCM (A6) and CMP sensor B, then go to step 18.

NO—Go to step 12.

12. Turn the ignition switch OFF.

13. Jump the SCS line with the HDS.

14. Disconnect ECM/PCM connector A (31P).

15. Check for continuity between ECM/PCM connector terminal A6 and body ground.

ECM/PCM CONNECTOR A (31P)

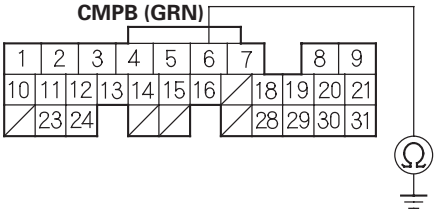

Wire side of female terminals

Is there continuity?

YES—Repair short in the wire between the ECM/PCM (A6) and CMP sensor B, then go to step 18.

NO—Go to step 24.

16. Turn the ignition switch OFF.

17. Replace CMP sensor B (see page 11-281).

18. Reconnect all connectors.

19. Turn the ignition switch ON (II).

20. Reset the ECM/PCM with the HDS.

21. Do the ECM/PCM idle learn procedure (see page 11-349).

22. Start the engine.

23. Check for Temporary DTCs or DTCs with the HDS.

Are any Temporary DTCs or DTCs indicated?

YES—If DTC P0365 is indicated, check for poor connections or loose terminals at CMP sensor B and the ECM/PCM, then go to step 1. If any other Temporary DTCs or DTCs are indicated, go to the indicated DTC's troubleshooting.

NO—Troubleshooting is complete. ■

24. Update the ECM/PCM if it does not have the latest software, or substitute a known-good ECM/PCM (see page 11-6).

25. Check for Temporary DTCs or DTCs with the HDS.

Are any Temporary DTCs or DTCs indicated?

YES—If DTC P0365 is indicated, check for poor connections or loose terminals at CMP sensor B and the ECM/PCM, then go to step 1. If any other Temporary DTCs or DTCs are indicated, go to the indicated DTC's troubleshooting.

NO—If the ECM/PCM was updated, troubleshooting is complete. If the ECM/PCM was substituted, replace the original ECM/PCM (see page 11-284). ■

DTC P0369: CMP Sensor B Circuit Intermittent Interruption (2005-2006 models)

1. Record all freeze data and on-board snapshots with the HDS.

2. Clear the DTC with the HDS.

3. Start the engine, and let it idle for 10 seconds.

4. Check the CMP NOISE B COUNT in the DATA LIST with the HDS.

   Are 0 counts indicated?

   YES—Go to step 7.

   NO—Go to step 5.

5. Test-drive the vehicle for several minutes in the range of these recorded freeze data parameters:

   - Engine speed
   - Vehicle speed

6. Check the CMP NOISE B COUNT in the DATA LIST with the HDS.

   Are 0 counts indicated?

   YES—Go to step 7.

   NO—Intermittent failure, system is OK at this time. Check for poor connections or loose terminals at CMP sensor B and the ECM/PCM. ■

7. Check for poor or loose connections and terminals at these locations:

   - CMP sensor B
   - ECM/PCM
   - Engine ground
   - Body ground

   Are the connections and terminals OK?

   YES—Go to step 8.

   NO—Repair the connectors or terminals, then go to step 11.

8. Check the CMP sensor B pulse plate for damage (see page 6-33).

   Is the pulse plate damaged?

   YES—Replace the CMP sensor B pulse plate (see page 6-33), then go to step 11.

   NO—Go to step 9.

9. Turn the ignition switch OFF.

10. Replace CMP sensor B (see page 11-281).

11. Turn the ignition switch ON (II).

12. Reset the ECM/PCM with the HDS.

13. Do the ECM/PCM idle learn procedure (see page 11-349).

14. Start the engine, and let it idle for 10 seconds.

15. Check for Temporary DTCs or DTCs with the HDS.

    Are any Temporary DTCs or DTCs indicated?

    YES—If DTC P0369 is indicated, check for poor connections or loose terminals at CMP sensor B and the ECM/PCM, then go to step 1. If any other Temporary DTCs or DTCs are indicated, go to the indicated DTC's troubleshooting.

    NO—Troubleshooting is complete. ■

DTC Troubleshooting (cont'd)

DTC P0500: VSS Circuit Malfunction (2002-2004 models)

1. Test-drive the vehicle.
2. Check the vehicle speed with a scan tool or the HDS.

   Is the correct speed indicated?

   YES—Intermittent failure, system is OK at this time. Check for poor connections or loose terminals at the VSS and the ECM. ■

   NO—Go to step 3.
3. Turn the ignition switch OFF.
4. Block the rear wheels and set the parking brake.
5. Raise the front of the vehicle, and make sure it is securely supported.
6. Turn the ignition switch ON (II).
7. Block the right front wheel, and slowly rotate the left front wheel.
8. Measure voltage between ECM connector terminals A18 and A24.

ECM CONNECTOR A (31P)

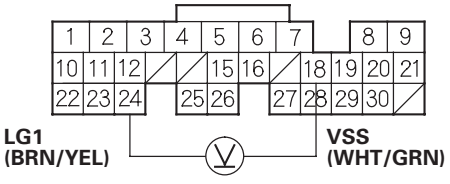

Wire side of female terminals

Does the voltage pulse between 0 V and 5 V or battery voltage?

YES—Update the ECM if it does not have the latest software, or substitute a known-good ECM (see page 11-6), then recheck. If the symptom/indication goes away with a known-good ECM, replace the original ECM (see page 11-284). ■

NO—Go to step 9.

9. Turn the ignition switch OFF.
10. Disconnect ECM connector A (31P).
11. Turn the ignition switch ON (II).
12. Block the right front wheel, and slowly rotate the left front wheel.
13. Measure voltage between ECM connector terminals A18 and A24.

ECM CONNECTOR A (31P)

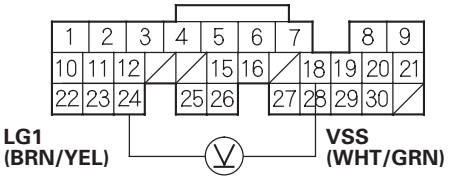

Wire side of female terminals

Does the voltage pulse between 0 V and 5 V or battery voltage?

YES—Update the ECM if it does not have the latest software, or substitute a known-good ECM (see page 11-6), then recheck. If the symptom/indication goes away with a known-good ECM, replace the original ECM (see page 11-284). ■

NO—Check for a short or an open in the wire between the ECM (A18) and the VSS. If the wire is OK, test the VSS (see page 22-75). ■

DTC P0562: Charging System Low Voltage (2005-2006 models)

NOTE:
- If DTC P16BB and/or P16BC is stored at the same time as DTC P0562, troubleshoot DTC P16BB and/or P16BC first, then recheck for DTC P0562.
- If any high current load accessories are installed, this DTC can be set.

1. Turn the ignition switch ON (II).

2. Clear the DTC with the HDS.

3. Start the engine.

4. Check under these conditions:

   - A/C on
   - Temperature control at maximum cool
   - Blower fan at maximum speed
   - Rear window defogger on
   - Headlights on high beam

5. Hold the engine speed at 2,000 rpm (in Park or neutral) for 1 minute.

6. Check for Temporary DTCs or DTCs with the HDS.

   Is DTC P0562 indicated?

   YES—Replace the alternator (see page 4-46), then go to step 7.

   NO—Intermittent failure, system is OK at this time. Check for poor connections or loose terminals at the alternator and the under-hood fuse/relay box, and check the battery performance (see page 22-61).■

7. Turn the ignition switch ON (II).

8. Reset the ECM/PCM with the HDS.

9. Do the ECM/PCM idle learn procedure (see page 11-349).

10. Start the engine.

11. Check under these conditions:

    - A/C on
    - Temperature control at maximum cool
    - Blower fan at maximum speed
    - Rear window defogger on
    - Headlights on high beam

12. Hold the engine speed at 2,000 rpm (in Park or neutral) for 1 minute.

13. Check for Temporary DTCs or DTCs with the HDS.

    Are any Temporary DTCs or DTCs indicated?

    YES—If DTC P0562 is indicated, check for poor connections or loose terminals at the alternator and the under-hood fuse/relay box, then go to step 1. If any other Temporary DTCs or DTCs are indicated, go to the indicated DTC's troubleshooting.

    NO—Troubleshooting is complete.■

DTC Troubleshooting (cont'd)

DTC P0563: ECM/PCM Power Source Circuit Unexpected Voltage (2002-2004 models)

1. Reset the ECM/PCM (see page 11-4).
2. Turn the ignition switch OFF.
3. Wait 5 seconds.
4. Turn the ignition switch ON (II).

   Is DTC P0563 indicated?

   YES—Go to step 5.

   NO—Intermittent failure, system is OK at this time. Check for poor connections or loose terminals at the No. 6 ECU (ECM/PCM) (15 A) fuse in the under-hood fuse/relay box and the ECM/PCM. ■

5. Turn the ignition switch OFF.
6. Disconnect ECM/PCM connector E (31P).
7. Measure voltage between ECM/PCM connector terminal E7 and body ground.

ECM/PCM CONNECTOR E (31P)

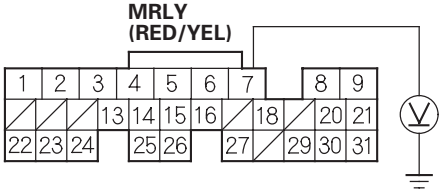

Wire side of female terminals

Is there battery voltage?

YES—Go to step 11.

NO—Go to step 8.

8. Remove the glove box (see page 20-67).
9. Remove PGM-FI main relay 1 (FI MAIN) (A).

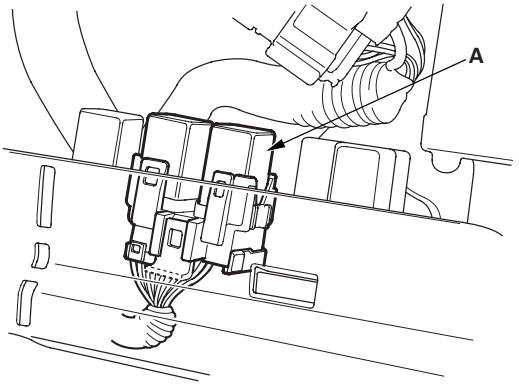

10. Check for continuity between ECM/PCM connector terminal E7 and body ground.

ECM/PCM CONNECTOR E (31P)

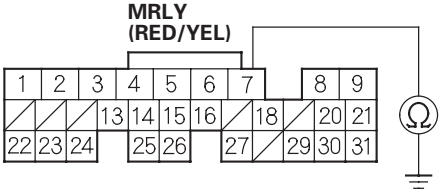

Wire side of female terminals

Is there continuity?

YES—Repair short in the wire between the ECM/PCM (E7) and PGM-FI main relay 1 (FI MAIN). ■

NO—Replace PGM-FI main relay 1 (FI MAIN). ■

11. Reconnect ECM/PCM connector E (31P).

12. Measure voltage between ECM/PCM connector terminal E7 and body ground.

ECM/PCM CONNECTOR E (31P)

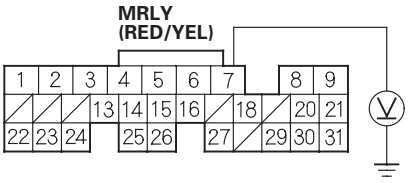

Wire side of female terminals

Is there battery voltage?

YES—Go to step 13.

NO—Update the ECM/PCM if it does not have the latest software, or substitute a known-good ECM/PCM (see page 11-6), then recheck. If the symptom/indication goes away with a known-good ECM/PCM, replace the original ECM/PCM (see page 11-284). ■

13. Disconnect ECM/PCM connector A (31P).

14. Measure voltage between body ground and ECM/PCM connector terminals A3 and A2 individually.

ECM/PCM CONNECTOR A (31P)

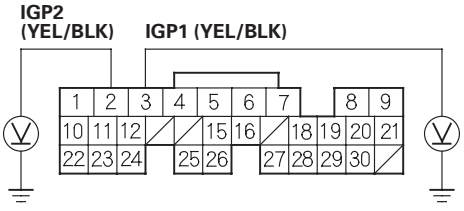

Wire side of female terminals

Is there battery voltage?

YES—Go to step 15.

NO—Update the ECM/PCM if it does not have the latest software, or substitute a known-good ECM/PCM (see page 11-6), then recheck. If the symptom/indication goes away with a known-good ECM/PCM, replace the original ECM/PCM (see page 11-284). ■

15. Remove the glove box (see page 20-67).

16. Remove PGM-FI main relay 1 (FI MAIN) (A).

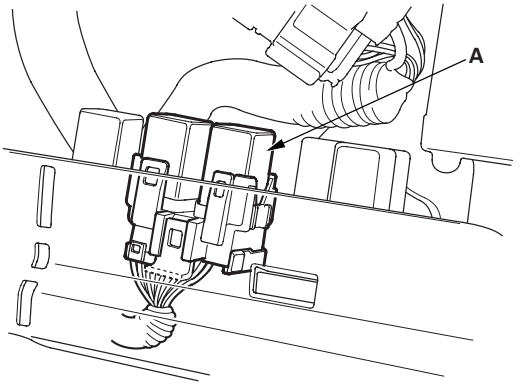

17. Measure voltage between body ground and ECM/PCM connector terminals A3 and A2 individually.

ECM/PCM CONNECTOR A (31P)

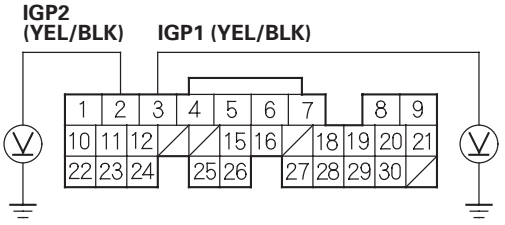

Wire side of female terminals

Is there battery voltage?

YES—Repair short to power in the wire between the ECM/PCM (A2, A3) and PGM-FI main relay 1 (FI MAIN). ■

NO—Replace PGM-FI main relay 1 (FI MAIN). ■

DTC Troubleshooting (cont'd)

DTC P0563: ECM/PCM Power Source Circuit Unexpected Voltage (2005-2006 models)

1. Turn the ignition switch ON (II).
2. Clear the DTC with the HDS.
3. Turn the ignition switch OFF.
4. Wait 10 seconds.
5. Turn the ignition switch ON (II).
6. Check for Temporary DTCs or DTCs with the HDS.

   Is DTC P0563 indicated?

   YES—Go to step 7.

   NO—Intermittent failure, system is OK at this time. Check for poor connections or loose terminals at the No. 6 ECU (ECM/PCM) (20 A) fuse in the under-hood fuse/relay box, PGM-FI main relay 1 (FI MAIN), and the ECM/PCM. ■

7. Turn the ignition switch OFF.
8. Jump the SCS line with the HDS.
9. Disconnect ECM/PCM connector E (31P).
10. Measure voltage between ECM/PCM connector terminal E7 and body ground.

ECM/PCM CONNECTOR E (31P)

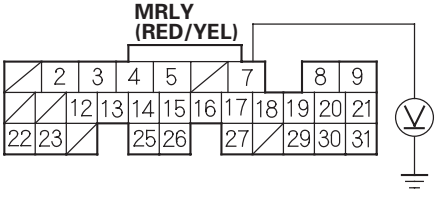

Wire side of female terminals

Is there battery voltage?

YES—Go to step 13.

NO—Go to step 11.

11. Remove the glove box (see page 20-67), then remove PGM-FI main relay 1 (FI MAIN) (A).

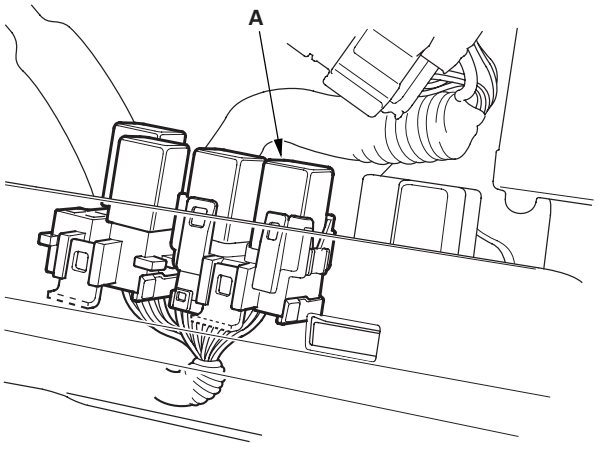

12. Check for continuity between ECM/PCM connector terminal E7 and body ground.

ECM/PCM CONNECTOR E (31P)

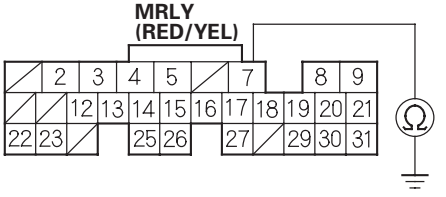

Wire side of female terminals

Is there continuity?

YES—Repair short in the wire between the ECM/PCM (E7) and PGM-FI main relay 1 (FI MAIN), then go to step 20.

NO—Go to step 19.

13. Reconnect ECM/PCM connector E (31P).

14. Measure voltage between ECM/PCM connector terminal E7 and body ground.

ECM/PCM CONNECTOR E (31P)

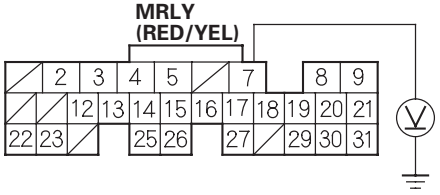

Wire side of female terminals

Is there battery voltage?

YES—Go to step 15.

NO—Go to step 27.

15. Disconnect ECM/PCM connector A (31P).

16. Measure voltage between body ground and ECM/PCM connector terminals A3 and A2 individually.

ECM/PCM CONNECTOR A (31P)

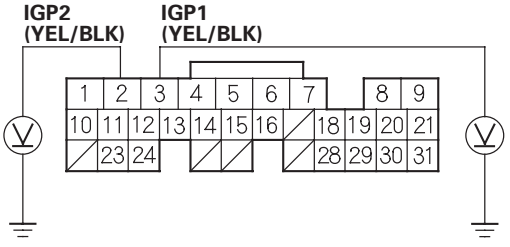

Wire side of female terminals

Is there battery voltage?

YES—Go to step 17.

NO—Go to step 27.

17. Remove the glove box (see page 20-67), then remove PGM-FI main relay 1 (FI MAIN) (A).

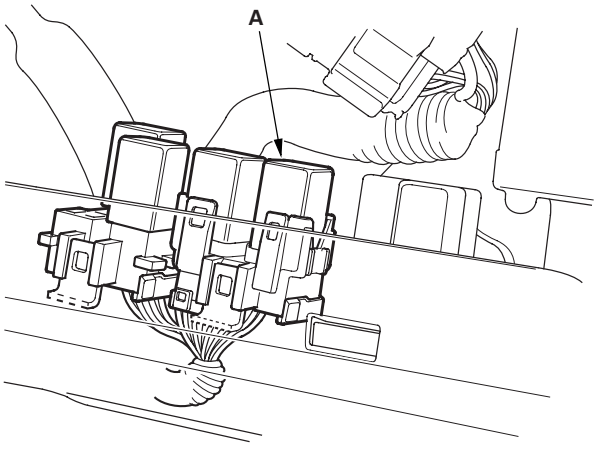

18. Measure voltage between body ground and ECM/PCM connector terminals A3 and A2 individually.

ECM/PCM CONNECTOR A (31P)

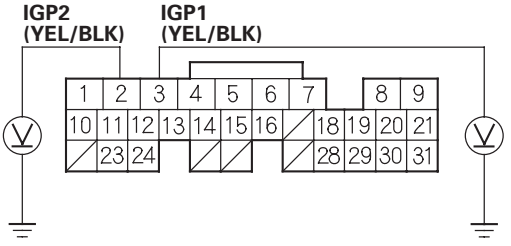

Wire side of female terminals

Is there battery voltage?

YES—Repair short to power in the wire between the ECM/PCM (A2, A3) and PGM-FI main relay 1 (FI MAIN), then go to step 20.

NO—Go to step 19.

(cont'd)

DTC Troubleshooting (cont'd)

19. Replace PGM-FI main relay 1 (FI MAIN) (A).

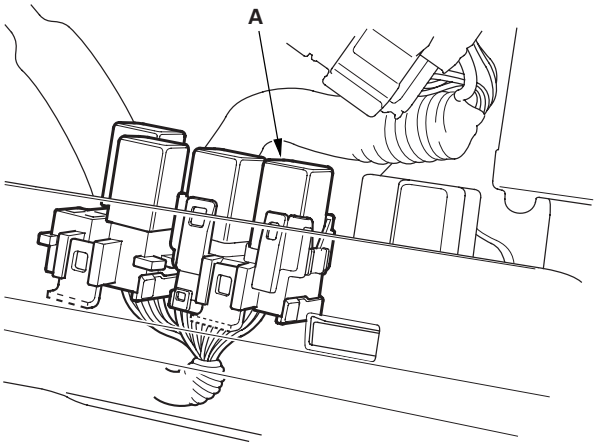

20. Reconnect all connectors.

21. Turn the ignition switch ON (II).

22. Reset the ECM/PCM with the HDS.

23. Turn the ignition switch OFF.

24. Wait 10 seconds.

25. Do the ECM/PCM idle learn procedure (see page 11-349).

26. Check for Temporary DTCs or DTCs with the HDS.

    Are any Temporary DTCs or DTCs indicated?

    YES—If DTC P0563 is indicated, check for poor connections or loose terminals at PGM-FI main relay 1 (FI MAIN) and the ECM/PCM, then go to step 1. If any other Temporary DTCs or DTCs are indicated, go to the indicated DTC's troubleshooting.

    NO—Troubleshooting is complete. ■

27. Update the ECM/PCM if it does not have the latest software, or substitute a known-good ECM/PCM (see page 11-6).

28. Check for Temporary DTCs or DTCs with the HDS.

    Are any Temporary DTCs or DTCs indicated?

    YES—If DTC P0563 is indicated, check for poor connections or loose terminals at PGM-FI main relay 1 (FI MAIN) and the ECM/PCM, then go to step 1. If any other Temporary DTCs or DTCs are indicated, go to the indicated DTC's troubleshooting.

    NO—If the ECM/PCM was updated, troubleshooting is complete. If the ECM/PCM was substituted, replace the original ECM/PCM (see page 11-284). ■

DTC P0602: ECM/PCM Programming Error (2005-2006 models)

NOTE:
- This DTC is indicated when the ECM/PCM update is not completed.
- Do not turn the ignition switch OFF while updating the ECM/PCM. If you turn the ignition switch OFF before completion, the ECM/PCM will be damaged.

1. Update the ECM/PCM (see page 11-6).

2. Check for Temporary DTCs or DTCs with the HDS.

   Is DTC P0602 indicated?

   YES—Replace the original ECM/PCM (see page 11-284).■

   NO—Troubleshooting is complete.■

DTC Troubleshooting (cont'd)

DTC P0603: ECM/PCM Internal Circuit Malfunction (Keep Alive Memory (KAM) Error)
(2005-2006 models)

1. Turn the ignition switch ON (II).
2. Clear the DTC with the HDS.
3. Wait for 1 second.
4. Check for Temporary DTCs or DTCs with the HDS.

   Are any Temporary DTCs or DTCs indicated?

   YES—Update the ECM/PCM if it does not have the latest software, or substitute a known-good ECM/PCM (see page 11-6), then recheck. If the symptom/indication goes away with a known-good ECM/PCM, replace the original ECM/PCM (see page 11-284). ■

   NO—Intermittent failure, system is OK at this time. ■

DTC P0606: ECM/PCM Processor Malfunction (2005 model)

1. Turn the ignition switch ON (II).
2. Clear the DTC with the HDS.
3. Turn the ignition switch OFF.
4. Turn the ignition switch ON (II).
5. Wait 40 seconds.
6. Check for Temporary DTCs or DTCs with the HDS.

   Is DTC P0606 indicated?

   YES—Update the ECM/PCM if it does not have the latest software, or substitute a known-good ECM/PCM (see page 11-6), then recheck. If the symptom/indication goes away with a known-good ECM/PCM, replace the original ECM/PCM (see page 11-284). ■

   NO—Intermittent failure, system is OK at this time. ■

DTC P0607: ECM/PCM Internal Circuit Malfunction
(2004 model)

DTC P1607: ECM/PCM Internal Circuit Malfunction
(2002-2003 models)

NOTE:
- Information marked with an asterisk (*) applies to 2004 model.
- Information marked with double asterisk (**) applies to 2002-2003 models.

1. Reset the ECM/PCM (see page 11-4).

2. Turn the ignition switch ON (II).

3. Wait 40 seconds.

   Is DTC P0607 (P1607)** indicated?*

   YES—Update the ECM/PCM if it does not have the latest software, or substitute a known-good ECM/PCM (see page 11-6), then recheck. If the symptom/indication goes away with a known-good ECM/PCM, replace the original ECM/PCM (see page 11-284). ■

   NO—Intermittent failure, system is OK at this time. ■

DTC Troubleshooting (cont'd)

DTC P0630: VIN Not Programmed or Mismatch (2005-2006 models)

NOTE: This DTC is stored only when the ECM/PCM does not have the VIN information of the vehicle. Use the HDS to fill the missing VIN information.

1. Turn the ignition switch ON (II).
2. Check the VIN with the HDS.

   Does the HDS show the vehicle's VIN?

   YES—Go to step 5.

   NO—Go to step 3.
3. Input the VIN to the ECM/PCM with the HDS.

   Does the screen show COMPLETE?

   YES—Go to step 5.

   NO—Go to step 4.
4. Check for DTCs with the HDS.

   Is DTC P0603 indicated?

   YES—Go to the DTC P0603 troubleshooting. ■

   NO—Update the ECM/PCM if it does not have the latest software, or substitute a known-good ECM/PCM (see page 11-6), then recheck. If the symptom/indication goes away with a known-good ECM/PCM, replace the original ECM/PCM (see page 11-284). ■
5. Clear the DTC with the HDS.
6. Turn the ignition switch OFF.
7. Turn the ignition switch ON (II), and wait 5 seconds.
8. Check for Temporary DTCs or DTCs with the HDS.

   Are any Temporary DTCs or DTCs indicated?

   YES—If DTC P0630 is indicated, update the ECM/PCM if it does not have the latest software, or substitute a known-good ECM/PCM (see page 11-6), then recheck. If any other Temporary DTCs or DTCs are indicated, go to the indicated DTC's troubleshooting.

   NO—Intermittent failure, system is OK at this time. ■

DTC P0685: ECM/PCM Power Control Circuit/ Internal Circuit Malfunction (2005-2006 models)

NOTE: If the problem doesn't return after you clear the DTC, or if this DTC is stored intermittently, check for loose terminals at the IGP line connectors before replacing the ECM/PCM.

1. Turn the ignition switch ON (II).
2. Clear the DTC with the HDS.
3. Start the engine, then let it idle for 30 seconds.
4. Turn the ignition switch OFF.
5. Start the engine, then let it idle for 30 seconds.
6. Turn the ignition switch OFF.
7. Turn the ignition switch ON (II).
8. Check for Temporary DTCs or DTCs with the HDS.

   Is DTC P0685 indicated?

   YES—Update the ECM/PCM if it does not have the latest software, or substitute a known-good ECM/PCM (see page 11-6), then recheck. If the symptom/indication goes away with a known-good ECM/PCM, replace the original ECM/PCM (see page 11-284). ■

   NO—Intermittent failure, system is OK at this time. ■

DTC P0700: A/T Control System Malfunction

NOTE: This DTC is stored when there is a problem in the A/T control system. Check for A/T DTCs with the HDS, and go to the indicated DTC's troubleshooting.

DTC Troubleshooting (cont'd)

DTC P0720: Output Shaft (Countershaft) Speed Sensor Circuit Malfunction (2005-2006 models)

NOTE: This DTC only occurs on M/T vehicles.

1. Start the engine. Hold the engine speed at 3,000 rpm without load (in neutral) until the radiator fan comes on, then let it idle.

2. Test-drive several miles.

3. Check the C SHAFT SPD in the DATA LIST with the HDS.

   Is any vehicle speed indicated?

   YES—Intermittent failure, system is OK at this time. Check for poor connections or loose terminals at the output shaft (countershaft) speed sensor and the ECM.■

   NO—Go to step 4.

4. Turn the ignition switch OFF.

5. Disconnect the output shaft (countershaft) speed sensor 3P connector.

6. Turn the ignition switch ON (II).

7. Measure voltage between output shaft (countershaft) speed sensor 3P connector terminal No. 1 and body ground.

OUTPUT SHAFT (COUNTERSHAFT) SPEED SENSOR 3P CONNECTOR

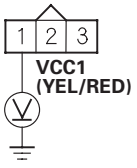

Wire side of female terminals

   Is there about 5 V?

   YES—Go to step 8.

   NO—Repair open in the wire between the ECM (A21) and the output shaft (countershaft) speed sensor, then go to step 17.

8. Measure voltage between output shaft (countershaft) speed sensor 3P connector terminal No. 2 and body ground.

OUTPUT SHAFT (COUNTERSHAFT) SPEED SENSOR 3P CONNECTOR

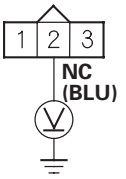

Wire side of female terminals

   Is there about 5 V?

   YES—Go to step 9.

   NO—Go to step 10.

9. Measure voltage between output shaft (countershaft) speed sensor 3P connector terminals No. 1 and No. 3.

OUTPUT SHAFT (COUNTERSHAFT) SPEED SENSOR 3P CONNECTOR

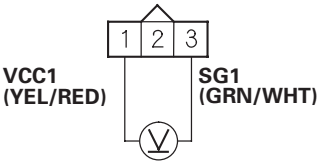

Wire side of female terminals

   Is there about 5 V?

   YES—Go to step 15.

   NO—Repair open in the wire between the output shaft (countershaft) speed sensor and G101, then go to step 17.

10. Measure voltage between ECM connector terminal A18 and body ground.

ECM CONNECTOR A (31P)

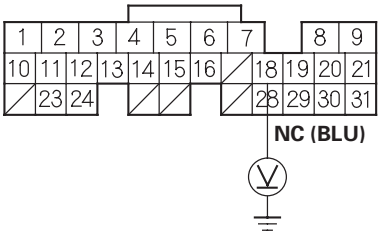

Wire side of female terminals

Is there about 5 V?

YES—Repair open in the wire between the ECM (A18) and the output shaft (countershaft) speed sensor, then go to step 17.

NO—Go to step 11.

11. Turn the ignition switch OFF.

12. Jump the SCS line with the HDS.

13. Disconnect ECM connector A (31P).

14. Check for continuity between ECM connector terminal A18 and body ground.

ECM CONNECTOR A (31P)

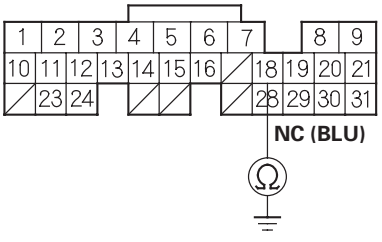

Wire side of female terminals

Is there continuity?

YES—Repair short in the wire between the ECM (A18) and the output shaft (countershaft) speed sensor, then go to step 17.

NO—Go to step 24.

15. Turn the ignition switch OFF.

16. Replace the output shaft (countershaft) speed sensor (see page 11-283), then go to step 17.

17. Reconnect all connectors.

18. Turn the ignition switch ON (II).

19. Reset the ECM with the HDS.

20. Do the ECM idle learn procedure (see page 11-349).

21. Test-drive under these conditions:

- Engine coolant temperature above 158 °F (70 °C)
- Transmission in 5th gear
- Engine speed at 2,000—3,000 rpm
- Drive for several minutes, then decelerate (with the throttle fully closed) for 8 seconds

22. Check for Temporary DTCs or DTCs with the HDS.

Are any Temporary DTCs or DTCs indicated?

YES—If DTC P0720 is indicated, check for poor connections or loose terminals at the output shaft (countershaft) speed sensor and the ECM, then go to step 1. If any other Temporary DTCs or DTCs are indicated, go to the indicated DTC's troubleshooting.

NO—Go to step 23.

23. Monitor the OBD STATUS for DTC P0720 in the DTCs MENU with the HDS.

Does the screen indicate PASSED?

YES—Troubleshooting is complete. ■

NO—If the screen indicates FAILED, go to step 1 and recheck. If the screen indicates NOT COMPLETED, go to step 21 and recheck.

(cont'd)

DTC Troubleshooting (cont'd)

24. Update the ECM if it does not have the latest software, or substitute a known-good ECM (see page 11-6).

25. Test-drive under these conditions:

    - Engine coolant temperature above 158 °F (70 °C)
    - Transmission in 5th gear
    - Engine speed at 2,000—3,000 rpm
    - Drive for several minutes, then decelerate (with the throttle fully closed) for 8 seconds

26. Check for Temporary DTCs or DTCs with the HDS.

    Are any Temporary DTCs or DTCs indicated?

    YES—If DTC P0720 is indicated, check for poor connections or loose terminals at the output shaft (countershaft) speed sensor and the ECM, then go to step 1. If any other Temporary DTCs or DTCs are indicated, go to the indicated DTC's troubleshooting.

    NO—If the ECM was updated, troubleshooting is complete. If the ECM was substituted, replace the original ECM (see page 11-284). ■

DTC P1106: BARO Sensor Circuit Range/ Performance Problem (2002-2003 models)

DTC P2227: BARO Sensor Circuit Range/ Performance Problem (2004 model)

NOTE:
- Information marked with an asterisk (*) applies to 2002-2003 models.
- Information marked with double asterisk (**) applies to 2004 model.

1. Reset the ECM/PCM (see page 11-4).

2. Start the engine. Hold the engine speed at 3,000 rpm without load (in Park or neutral) until the radiator fan comes on, then let it idle.

3. Test-drive with the A/T in D position, or the M/T in 4th gear.

4. Accelerate for 5 seconds using wide open throttle.

5. Check for a Temporary DTC with a scan tool or the HDS.

   Is Temporary DTC P1106 (P2227)** indicated?*

   YES—Update the ECM/PCM if it does not have the latest software, or substitute a known-good ECM/PCM (see page 11-6), then recheck. If the symptom/indication goes away with a known-good ECM/PCM, replace the original ECM/PCM (see page 11-284). ■

   NO—Intermittent failure, system is OK at this time. ■

DTC P1107: BARO Sensor Circuit Low Voltage (2002-2003 models)

DTC P1108: BARO Sensor Circuit High Voltage (2002-2003 models)

DTC P2228: BARO Sensor Circuit Low Voltage (2004 model)

DTC P2229: BARO Sensor Circuit High Voltage (2004 model)

NOTE:
- Information marked with an asterisk (*) applies to 2002-2003 models.
- Information marked with double asterisk (**) applies to 2004 model.

1. Reset the ECM/PCM (see page 11-4).

2. Turn the ignition switch ON (II).

   Is DTC P1107 (P2228)** or P1108* (P2229)** indicated?*

   YES—Update the ECM/PCM if it does not have the latest software, or substitute a known-good ECM/PCM (see page 11-6), then recheck. If the symptom/indication goes away with a known-good ECM/PCM, replace the original ECM/PCM (see page 11-284). ■

   NO—Intermittent failure, system is OK at this time. ■

DTC Troubleshooting (cont'd)

DTC P1109: BARO Sensor Circuit Out of Range High
(2005-2006 models)

1. Reset the ECM/PCM with the HDS.

2. Start the engine.

3. Check for Temporary DTCs or DTCs with the HDS.

   Is DTC P1109 indicated?

   YES—Update the ECM/PCM if it does not have the latest software, or substitute a known-good ECM/PCM (see page 11-6), then recheck. If the symptom/indication goes away with a known-good ECM/PCM, replace the original ECM/PCM (see page 11-284). ■

   NO—Intermittent failure, system is OK at this time. ■

DTC P1121: TP Sensor Signal Lower Than Expected (2002-2004 models)

NOTE: Information marked with ＊1 applies to K20A3 engine; ＊2 applies to K20A2 engine.

1. Turn the ignition switch ON (II).

2. Check the throttle position with a scan tool or the HDS.

   Is 12.6 %, 0.6 V ＊1 (12.9 %, 0.6 V) ＊2 , or higher indicated when the throttle is fully opened?

   YES—Intermittent failure, system is OK at this time. ■

   NO—Replace the throttle body, K20A2 engine (see page 11-410), K20A3 engine (see page 11-411). ■

DTC Troubleshooting (cont'd)

DTC P1121: TP Sensor Signal Lower Than Expected (2005-2006 models)

NOTE: Information marked with an asterisk (*) applies to K20Z1 engine.

1. Turn the ignition switch ON (II).
2. Clear the DTC with the HDS.
3. Open the throttle fully.
4. Check the TP SENSOR in the DATA LIST with the HDS.

   Is the throttle position less than 6.4 (4.2) degrees (REL) (28 (15)* % (REL)) for 5 seconds?*

   YES—Go to step 8.

   NO—Go to step 5.
5. Start the engine. Hold the engine speed at 3,000 rpm without load (in Park or neutral) until the radiator fan comes on, then let it idle.
6. Test-drive the vehicle at 16 mph (25 km/h) or more, and at 1,050 (1,300)* rpm or more.
7. Monitor the OBD STATUS for DTC P1121 in the DTCs MENU with the HDS.

   Does the screen indicate FAILED?

   YES—Go to step 8.

   NO—If the screen indicates PASSED, intermittent failure, system is OK at this time. Check for poor connections or loose terminals at the TP sensor and the ECM/PCM. If the screen indicates NOT COMPLETED, go to step 5 and recheck.
8. Turn the ignition switch OFF.
9. Replace the throttle body, K20Z1 engine (see page 11-410), K20A3 engine (see page 11-411).
10. Turn the ignition switch ON (II).
11. Reset the ECM/PCM with the HDS.
12. Do the ECM/PCM idle learn procedure (see page 11-349).
13. Start the engine. Hold the engine speed at 3,000 rpm without load (in Park or neutral) until the radiator fan comes on, then let it idle.
14. Test-drive the vehicle at 16 mph (25 km/h) or more, and at 1,050 (1,300)* rpm or more.
15. Check for Temporary DTCs or DTCs with the HDS.

    Are any Temporary DTCs or DTCs indicated?

    YES—If DTC P1121 is indicated, check for poor connections or loose terminals at the TP sensor and the ECM/PCM, then go to step 1. If any other Temporary DTCs or DTCs are indicated, go to the indicated DTC's troubleshooting.

    NO—Go to step 16.
16. Monitor the OBD STATUS for DTC P1121 in the DTCs MENU with the HDS.

    Does the screen indicate PASSED?

    YES—Troubleshooting is complete. ■

    NO—If the screen indicates FAILED, check for poor connections or loose terminals at the TP sensor and the ECM/PCM, then go to step 1. If the screen indicates NOT COMPLETED, go to step 13 and recheck.

DTC P1122: TP Sensor Signal Higher Than Expected (2002-2004 models)

NOTE: Information marked with ∗1 applies to K20A3 engine; ∗2 applies to K20A2 engine.

1. Turn the ignition switch ON (II).

2. Check the throttle position with a scan tool or the HDS.

   Is 12.6 %, 0.6 V ∗1 (12.9 %, 0.6 V) ∗2, or less indicated when the throttle is fully closed?

   YES—Intermittent failure, system is OK at this time. ■

   NO—Replace the throttle body, K20A2 engine (see page 11-410), K20A3 engine (see page 11-411). ■

DTC Troubleshooting (cont'd)

DTC P1122: TP Sensor Signal Higher Than Expected (2005-2006 models)

NOTE: Information marked with an asterisk (*) applies to K20Z1 engine.

1. Turn the ignition switch ON (II).

2. Clear the DTC with the HDS.

3. Start the engine. Hold the engine speed at 3,000 rpm without load (in Park or neutral) until the radiator fan comes on, then let it idle.

4. Check the TP SENSOR in the DATA LIST with the HDS.

   Is the throttle position less than 6.4 (4.2) degrees (REL) (28 (15)* % (REL)) for 5 seconds?*

   YES—Go to step 8.

   NO—Go to step 5.

5. Start the engine. Hold the engine speed at 3,000 rpm without load (in Park or neutral) until the radiator fan comes on, then let it idle.

6. Test-drive the vehicle at 16 mph (25 km/h) or more, and, at 1,050 (1,300)* rpm or more.

7. Monitor the OBD STATUS for DTC P1122 in the DTCs MENU with the HDS.

   Does the screen indicate FAILED?

   YES—Go to step 8.

   NO—If the screen indicates PASSED, intermittent failure, system is OK at this time. Check for poor connections or loose terminals at the TP sensor and the ECM/PCM. If the screen indicates NOT COMPLETED, go to step 5 and recheck.

8. Turn the ignition switch OFF.

9. Replace the throttle body, K20Z1 engine (see page 11-410), K20A3 engine (see page 11-411).

10. Turn the ignition switch ON (II).

11. Reset the ECM/PCM with the HDS.

12. Do the ECM/PCM idle learn procedure (see page 11-349).

13. Start the engine. Hold the engine speed at 3,000 rpm without load (in Park or neutral) until the radiator fan comes on, then let it idle.

14. Test-drive the vehicle at 16 mph (25 km/h) or more, and at 1,050 rpm or more.

15. Check for Temporary DTCs or DTCs with the HDS.

    Are any Temporary DTCs or DTCs indicated?

    YES—If DTC P1121 is indicated, check for poor connections or loose terminals at the TP sensor and the ECM/PCM, then go to step 1. If any other Temporary DTCs or DTCs are indicated, go to the indicated DTC's troubleshooting.

    NO—Go to step 16.

16. Monitor the OBD STATUS for DTC P1122 in the DTCs MENU with the HDS.

    Does the screen indicate PASSED?

    YES—Troubleshooting is complete. ■

    NO—If the screen indicates FAILED, check for poor connections or loose terminals at the TP sensor and the ECM/PCM, then go to step 1. If the screen indicates NOT COMPLETED, go to step 13 and recheck.

DTC P1128: MAP Sensor Circuit Lower Than Expected (2002-2004 models)

1. Turn the ignition switch ON (II).

2. Check the MAP with a scan tool or the HDS.

   Is 54.1 kPa (16.0 in.Hg, 406 mmHg), 1.6 V or higher indicated?

   YES—Intermittent failure, system is OK at this time. ■

   NO—Replace the MAP sensor (see page 11-412). ■

DTC Troubleshooting (cont'd)

DTC P1128: MAP Sensor Circuit Lower Than Expected (2005-2006 models)

NOTE: Information marked with an asterisk (*) applies to K20Z1 engine.

1. Turn the ignition switch ON (II).

2. Check the MAP SENSOR in the DATA LIST with the HDS.

   Is less than 54.1 kPa (16.0 in.Hg, 406 mmHg) or 1.61 V held for more than 5 seconds?

   YES—Go to step 7.

   NO—Go to step 3.

3. Clear the DTC with the HDS.

4. Start the engine. Hold the engine speed at 3,000 rpm without load (in Park or neutral) until the radiator fan comes on, then let it idle.

5. Test-drive under these conditions:

   - Engine coolant temperature above 158 °F (70 °C)
   - Engine speed between 1,050 (1,300)* and 6,700 (7,800)* rpm
   - A/T in D position (M/T in 3rd gear)
   - Vehicle speed above 15 mph (24 km/h)
   - Engine speed between 1,000 and 4,000 rpm for 2 seconds or more

6. Monitor the OBD STATUS for DTC P1128 in the DTCs MENU with the HDS.

   Does the screen indicate FAILED?

   YES—Go to step 7.

   NO—If the screen indicates PASSED, intermittent failure, system is OK at this time. Check for poor connections or loose terminals at the MAP sensor and the ECM/PCM. If the screen indicates NOT COMPLETED, go to step 4 and recheck.

7. Turn the ignition switch OFF.

8. Replace the MAP sensor (see page 11-412).

9. Turn the ignition switch ON (II).

10. Reset the ECM/PCM with the HDS.

11. Do the ECM/PCM idle learn procedure (see page 11-349).

12. Start the engine. Hold the engine speed at 3,000 rpm without load (in Park or neutral) until the radiator fan comes on, then let it idle.

13. Test-drive under these conditions:

    - Engine coolant temperature above 158 °F (70 °C)
    - Engine speed between 1,050 (1,300)* and 6,700 (7,800)* rpm
    - A/T in D position (M/T in 3rd gear)
    - Vehicle speed above 15 mph (24 km/h)
    - Engine speed between 1,000 and 4,000 rpm for 2 seconds or more

14. Check for Temporary DTCs or DTCs with the HDS.

    Are any Temporary DTCs or DTCs indicated?

    YES—If DTC P1128 is indicated, check for poor connections or loose terminals at the MAP sensor and the ECM/PCM, then go to step 1. If any other Temporary DTCs or DTCs are indicated, go to the indicated DTC's troubleshooting.

    NO—Go to step 15.

15. Monitor the OBD STATUS for DTC P1128 in the DTCs MENU with the HDS.

    Does the screen indicate PASSED?

    YES—Troubleshooting is complete. ■

    NO—If the screen indicates FAILED, check for poor connections or loose terminals at the MAP sensor and the ECM/PCM, then go to step 1. If the screen indicates NOT COMPLETED, go to step 12 and recheck.

DTC P1129: MAP Sensor Circuit Higher Than Expected (2002-2004 models)

1. Start the engine. Hold the engine speed at 3,000 rpm without load (in Park or neutral) until the radiator fan comes on, then let it idle.

2. Check the MAP with a scan tool or the HDS.

   Is 36.9 kPa (10.9 in.Hg, 277 mmHg), 1.1 V, or less indicated?

   YES—Intermittent failure, system is OK at this time.■

   NO—Replace the MAP sensor (see page 11-412).■

DTC P1129: MAP Sensor Circuit Higher Than Expected (2005-2006 models)

NOTE: Information marked with an asterisk (*) applies to K20Z1 engine.

1. Check for vacuum leaks in these parts:

   - PCV valve
   - PCV hose
   - EVAP canister purge valve
   - Throttle body
   - Intake manifold
   - Brake booster hose

   Are there any vacuum leaks?

   YES—Go to step 2.

   NO—Repair or replace parts with vacuum leaks, then go to step 9.

2. Start the engine. Hold the engine speed at 3,000 rpm without load (in Park or neutral) until the radiator fan comes on, then let it idle.

3. Check the MAP SENSOR in the DATA LIST with the HDS.

   Is more than 36.9 kPa (11.0 in.Hg, 277 mmHg) or 1.1 V held for more than for 5 seconds?

   YES—Go to step 7.

   NO—Go to step 4.

4. Clear the DTC with the HDS.

5. Test-drive under these conditions:

   - Engine coolant temperature above 158 °F (70 °C)
   - Engine speed between 1,050 (1,300)* and 6,700 (7,800)* rpm
   - A/T in D position (M/T in 5th gear)
   - Maintain a vehicle speed of 55—75 mph (88—121 km/h) for 10 seconds
   - Decelerate with throttle fully closed for at least 2 seconds

(cont'd)

DTC Troubleshooting (cont'd)

6. Monitor the OBD STATUS for DTC P1129 in the DTCs MENU with the HDS.

   Does the screen indicate FAILED?

   YES—Go to step 7.

   NO—If the screen indicates PASSED, intermittent failure, system is OK at this time. Check for poor connections or loose terminals at the MAP sensor and the ECM/PCM. If the screen indicates NOT COMPLETED, go to step 5 and recheck.

7. Turn the ignition switch OFF.

8. Replace the MAP sensor (see page 11-412).

9. Turn the ignition switch ON (II).

10. Reset the ECM/PCM with the HDS.

11. Do the ECM/PCM idle learn procedure (see page 11-349).

12. Start the engine. Hold the engine speed at 3,000 rpm without load (in Park or neutral) until the radiator fan comes on, then let it idle.

13. Test-drive under these conditions:

    - Engine coolant temperature above 158 °F (70 °C)
    - Engine speed between 1,050 (1,300)* and 6,700 (7,800)* rpm
    - A/T in D position (M/T in 5th gear)
    - Maintain a vehicle speed of 55—75 mph (88—121 km/h) for 10 seconds
    - Decelerate with throttle fully closed for at least 2 seconds

14. Check for Temporary DTCs or DTC with the HDS.

    Are any Temporary DTCs or DTCs indicated?

    YES—If DTC P1129 is indicated, check for poor connections or loose terminals at the MAP sensor and the ECM/PCM, then go to step 1. If any other Temporary DTCs or DTCs are indicated, go to the indicated DTC's troubleshooting.

    NO—Go to step 15.

15. Monitor the OBD STATUS for DTC P1129 in the DTCs MENU with the HDS.

    Does the screen indicate PASSED?

    YES—Troubleshooting is complete. ■

    NO—If the screen indicates FAILED, check for poor connections or loose terminals at the MAP sensor and the ECM/PCM, then go to step 1. If the screen indicates NOT COMPLETED, go to step 12 and recheck.

DTC P1157: A/F Sensor (Sensor 1) AFS Circuit High Voltage (2004 model)

1. Reset the ECM/PCM (see page 11-4).

2. Start the engine.

   Is DTC P1157 indicated?

   YES—Go to step 3.

   NO—Intermittent failure, system is OK at this time. Check for poor connections or loose terminals at the A/F sensor (Sensor 1) and the ECM/PCM. ■

3. Turn the ignition switch OFF.

4. Disconnect the A/F sensor (Sensor 1) 4P connector and ECM/PCM connector A (31P).

5. Connect A/F sensor (Sensor 1) 4P connector terminals No. 1 and No. 2 with a jumper wire.

A/F SENSOR (SENSOR 1) 4P CONNECTOR

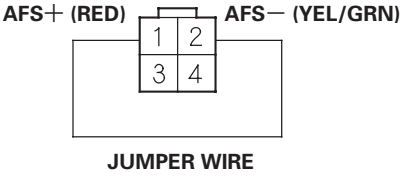

Wire side of female terminals

6. Check for continuity between ECM/PCM connector terminals A6 and A16.

ECM/PCM CONNECTOR A (31P)

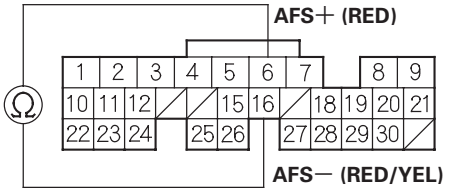

Wire side of female terminals

   Is there continuity?

   YES—Go to step 9.

   NO—Go to step 7.

7. Connect A/F sensor (Sensor 1) 4P connector terminal No. 1 to body ground with a jumper wire.

A/F SENSOR (SENSOR 1) 4P CONNECTOR

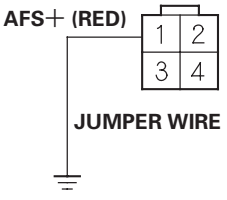

Wire side of female terminals

(cont'd)

DTC Troubleshooting (cont'd)

8. Check for continuity between ECM/PCM connector terminal A6 and body ground.

ECM/PCM CONNECTOR A (31P)

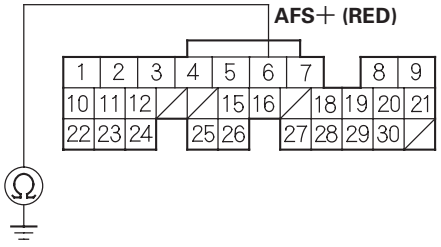

Wire side of female terminals

Is there continuity?

YES—Repair open in the wire between the A/F sensor (Sensor 1) and the ECM/PCM (A16). ■

NO—Repair open in the wire between the A/F sensor (Sensor 1) and the ECM/PCM (A6). ■

9. Substitute a known-good A/F sensor (Sensor 1) and recheck.

Is DTC P1157 indicated?

YES—Update the ECM/PCM if it does not have the latest software, or substitute a known-good ECM/PCM (see page 11-6), then recheck. If the symptom/indication goes away with a known-good ECM/PCM, replace the original ECM/PCM (see page 11-284). ■

NO—Replace the A/F sensor (Sensor 1) (see page 11-279). ■

DTC P1157: A/F Sensor (Sensor 1) AFS Circuit High Voltage (2005-2006 models)

1. Turn the ignition switch ON (II).
2. Clear the DTC with the HDS.
3. Start the engine, and wait 20 seconds.
4. Check for Temporary DTCs or DTCs with the HDS.

   Is DTC P1157 indicated?

   YES—Go to step 5.

   NO—Intermittent failure, system is OK at this time. Check for poor connections or loose terminals at the A/F sensor (Sensor 1) and the ECM/PCM. ■

5. Turn the ignition switch OFF.
6. Jump the SCS line with the HDS.
7. Disconnect the A/F sensor (Sensor 1) 4P connector.
8. Disconnect ECM/PCM connector A (31P).
9. Connect A/F sensor (Sensor 1) 4P connector terminals No. 1 and No. 2 with a jumper wire.

A/F SENSOR (SENSOR 1) 4P CONNECTOR

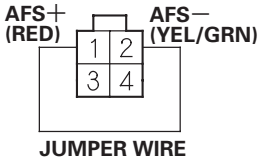

Wire side of female terminals

10. Check for continuity between ECM/PCM connector terminals A28 and A31.

ECM/PCM CONNECTOR A (31P)

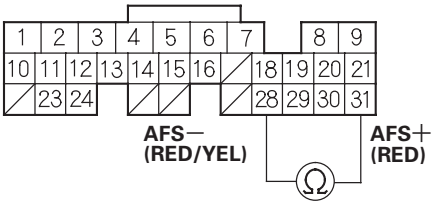

Wire side of female terminals

Is there continuity?

YES—Go to step 14.

NO—Go to step 11.

11. Remove the jumper wire from the A/F sensor (Sensor 1) 4P connector.
12. Connect A/F sensor (Sensor 1) 4P connector terminal No. 1 to body ground with a jumper wire.

A/F SENSOR (SENSOR 1) 4P CONNECTOR

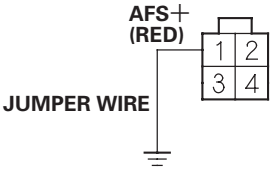

Wire side of female terminals

(cont'd)

DTC Troubleshooting (cont'd)

13. Check for continuity between ECM/PCM connector terminal A31 and body ground.

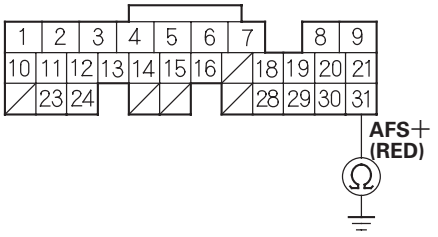

Wire side of female terminals

Is there continuity?

YES—Repair open in the wire between the ECM/PCM (A28) and the A/F sensor (Sensor 1), then go to step 15.

NO—Repair open in the wire between the ECM/PCM (A31) and the A/F sensor (Sensor 1), then go to step 15.

14. Replace the A/F sensor (Sensor 1) (see page 11-279).

15. Reconnect all connectors.

16. Turn the ignition switch ON (II).

17. Reset the ECM/PCM with the HDS.

18. Do the ECM/PCM idle learn procedure (see page 11-349).

19. Check for Temporary DTCs or DTCs with the HDS.

Are any Temporary DTCs or DTCs indicated?

YES—If DTC P1157 is indicated, check for poor connections or loose terminals at the A/F sensor (Sensor 1) and the ECM/PCM. If the connector and terminal fits are OK, go to step 21. If any other Temporary DTCs or DTCs are indicated, go to the indicated DTC's troubleshooting.

NO—Go to step 20.

20. Monitor the OBD STATUS for DTC P1157 in the DTCs MENU with the HDS.

Does the screen indicate PASSED?

YES—Troubleshooting is complete. ■

NO—If the screen indicates FAILED, check for poor connections or loose terminals at the A/F sensor (Sensor 1) and the ECM/PCM, then go to step 1. If the screen indicates NOT COMPLETED, go to step 18 and recheck.

21. Update the ECM/PCM if it does not have the latest software, or substitute a known-good ECM/PCM (see page 11-6).

22. Check for Temporary DTCs or DTCs with the HDS.

Is DTC P1157 indicated?

YES—Go to step 20 and recheck.

NO—If the ECM/PCM was updated, troubleshooting is complete. If the ECM/PCM was substituted, replace the original ECM/PCM (see page 11-284). ■

DTC P1162: A/F Sensor (Sensor 1) Circuit Malfunction (2002-2003 models)

1. Reset the ECM/PCM (see page 11-4).

2. Start the engine, and wait for at least 2 minutes.

   Is DTC P1162 indicated?

   YES—Go to step 3.

   NO—Intermittent failure, system is OK at this time. Check for poor connections or loose terminals at the A/F sensor (Sensor 1) and the ECM/PCM. ■

3. Turn the ignition switch OFF.

4. Start the engine.

5. Measure voltage between ECM/PCM connector terminals A6 and A24 and between A16 and A24.

ECM/PCM CONNECTOR A (31P)

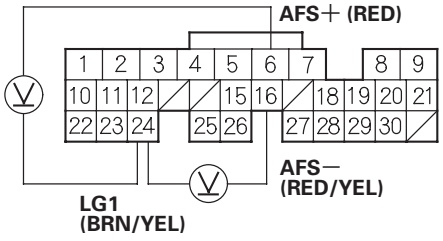

Wire side of female terminals

   Is there 2.5—3.0 V?

   YES—Go to step 6.

   NO—Go to step 10.

6. Turn the ignition switch OFF.

7. Disconnect the A/F sensor (Sensor 1) 4P connector and ECM/PCM connector A (31P).

8. Connect ECM/PCM connector terminals A6 and A16 to body ground with a jumper wire.

ECM/PCM CONNECTOR A (31P)

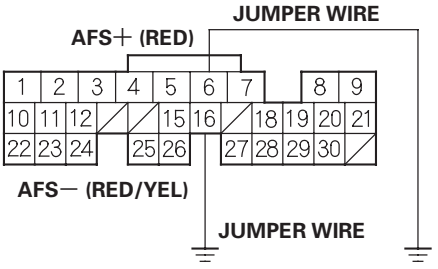

Wire side of female terminals

9. Check for continuity between A/F sensor (Sensor 1) 4P connector terminals No. 1, No. 2, and body ground individually.

A/F SENSOR (SENSOR 1) 4P CONNECTOR

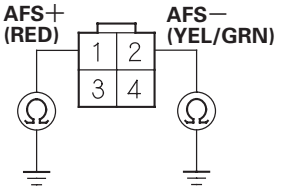

Wire side of female terminals

   Is there continuity?

   YES—Replace the A/F sensor (Sensor 1) (see page 11-279). ■

   NO—Repair open in the wire between the A/F sensor (Sensor 1) and the ECM/PCM (A6 or A16). ■

(cont'd)

DTC Troubleshooting (cont'd)

10. Turn the ignition switch OFF.

11. Disconnect the A/F sensor (Sensor 1) 4P connector and ECM/PCM connector A (31P).

12. Check for continuity between body ground and A/F sensor (Sensor 1) 4P connector terminals No. 2 and No. 1.

A/F SENSOR (SENSOR 1) 4P CONNECTOR

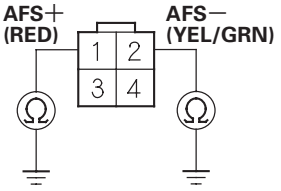

Wire side of female terminals

Is there continuity?

YES—Repair short in the wire between the A/F sensor (Sensor 1) and the ECM/PCM (A6 or A16). ■

NO—Replace the A/F sensor (Sensor 1) (see page 11-279). ■

DTC P1164: A/F Sensor (Sensor 1) Circuit Range/Performance Problem (2002-2003 models)

DTC P2A00: A/F Sensor (Sensor 1) Circuit Range/Performance Problem (2004 model)

NOTE:
- Information marked with an asterisk (*) applies to 2002-2003 models.
- Information marked with double asterisk (* *) applies to 2004 model.

1. Reset the ECM/PCM (see page 11-4).

2. Start the engine. Hold the engine speed at 3,000 rpm without load (in Park or neutral) until the radiator fan comes on.

3. Check for a Temporary DTC with a scan tool or the HDS.

   Is Temporary DTC P1164 (P2A00) indicated?*

   YES—Replace the A/F sensor (Sensor 1) (see page 11-279).■

   NO—Go to step 4.

4. Test-drive in D3 position (M/T in 3rd gear). Starting at 1,600 rpm, accelerate using wide open throttle for at least 5 seconds. Then decelerate for at least 5 seconds with the throttle completely closed until the readiness code or Temporary DTC P1164 comes on.

   Is Temporary DTC P1164 (P2A00) indicated?*

   YES—Replace the A/F sensor (Sensor 1) (see page 11-279).■

   NO—Intermittent failure, system is OK at this time. Check for poor connections or loose terminals at C101 (located under the right side of the dash), C401 (located under the left side of the dash), the A/F sensor relay, the A/F sensor (Sensor 1) and the ECM/PCM.■

DTC Troubleshooting (cont'd)

DTC P1167: A/F Sensor (Sensor 1) Heater System Malfunction (2002 model)

NOTE: If DTC P1162 is stored the same time as DTC P1167, troubleshoot DTC P1162 first, then troubleshoot DTC P1167 (2002 model only).

1. Reset the ECM/PCM (see page 11-4).

2. Start the engine. Wait for at least 80 seconds.

   Is DTC P1167 indicated?

   YES—Go to step 3.

   NO—Intermittent failure, system is OK at this time. Check for poor connections or loose terminals at C101 (located under the right side of the dash), C401 (located under middle of the dash), C402 (located under middle of the dash) the A/F sensor relay, the A/F sensor (Sensor 1), and the ECM/PCM. ■

3. Disconnect the A/F sensor (Sensor 1) 4P connector and ECM/PCM connector A (31P).

4. Connect ECM/PCM connector terminals A6 and A16 to body ground with a jumper wire.

ECM/PCM CONNECTOR A (31P)

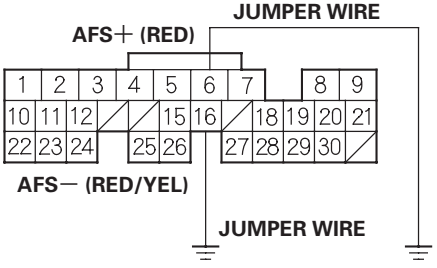

Wire side of female terminals

5. Check for continuity between body ground and A/F sensor (Sensor 1) 4P connector terminals No. 1 and No. 2 individually.

A/F SENSOR (SENSOR 1) 4P CONNECTOR

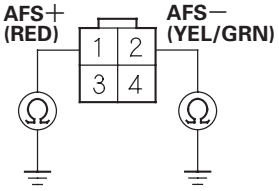

Wire side of female terminals

Is there continuity?

YES—Replace the A/F sensor (Sensor 1) (see page 11-279). ■

NO—Repair open in the wire between the A/F sensor (Sensor 1) and the ECM/PCM (A6 or A16). ■

DTC P1172: A/F Sensor (Sensor 1) Circuit Out of Range High (2005-2006 models)

1. Turn the ignition switch ON (II).

2. Clear the DTC with the HDS.

3. Start the engine. Hold the engine speed at 3,000 rpm without load (in Park or neutral) until the radiator fan comes on, then let it idle.

4. Monitor the OBD STATUS for P1172 in the DTCs MENU with the HDS.

   Does the screen indicate FAILED?

   YES—Go to step 5.

   NO—If the screen indicates PASSED, intermittent failure, system is OK at this time. Check for poor connections or loose terminals at the A/F sensor (Sensor 1) and the ECM/PCM. If the screen indicates EXECUTING, keep driving until a result comes on. If the screen indicates OUT OF CONDITION, go to step 3 and recheck.

5. Turn the ignition switch OFF.

6. Replace the A/F sensor (Sensor 1) (see page 11-279).

7. Turn the ignition switch ON (II).

8. Reset the ECM/PCM with the HDS.

9. Do the ECM/PCM idle learn procedure (see page 11-349).

10. Start the engine. Hold the engine speed at 3,000 rpm withtout load (in Park or neutral) until the radiator fan comes on, then let it idle.

11. Check for Temporary DTCs or DTCs with the HDS.

    Are any Temporary DTCs or DTCs indicated?

    YES—If DTC P1172 is indicated, check for poor connections or loose terminals at the A/F sensor (Sensor 1) and the ECM/PCM, then go to step 1. If any other Temporary DTCs or DTCs are indicated, go to the indicated DTC's troubleshooting.

    NO—Go to step 12.

12. Monitor the OBD STATUS for DTC P1172 in the DTCs MENU with the HDS.

    Does the screen indicate PASSED?

    YES—Troubleshooting is complete. ■

    NO—If the screen indicates FAILED, check for poor connections or loose terminals at the A/F sensor (Sensor 1) and the ECM/PCM, then go to step 1. If the screen indicates EXECUTING, keep driving until a result comes on. If the screen indicates OUT OF CONDITION, go to step 10 and recheck.

DTC Troubleshooting (cont'd)

DTC P1297: ELD Circuit Low Voltage (2002-2004 models)

1. Reset the ECM/PCM (see page 11-4).
2. Start the engine.
3. Turn on the headlights.

   Is DTC P1297 indicated?

   YES—Go to step 4.

   NO—Intermittent failure, system is OK at this time. Check for poor connections or loose terminals at the ELD and the ECM/PCM. ■

4. Turn the ignition switch and the headlights OFF.
5. Disconnect the ELD 3P connector.
6. Turn the ignition switch ON (II).
7. Measure voltage between body ground and ELD 3P connector terminal No. 3.

ELD 3P CONNECTOR

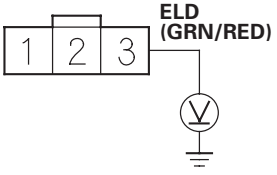

Wire side of female terminals

Is there about 5 V?

YES—Replace the ELD. ■

NO—Go to step 8.

8. Turn the ignition switch OFF.
9. Disconnect ECM/PCM connector E (31P).
10. Check for continuity between body ground and ECM/PCM connector terminal E15.

ECM/PCM CONNECTOR E (31P)

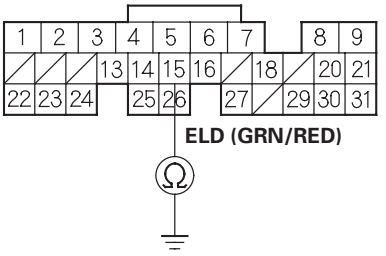

Wire side of female terminals

Is there continuity?

YES—Repair short in the wire between the ECM/PCM (E15) and the ELD. ■

NO—Update the ECM/PCM if it does not have the latest software, or substitute a known-good ECM/PCM (see page 11-6), then recheck. If the symptom/indication goes away with a known-good ECM/PCM, replace the original ECM/PCM (see page 11-284). ■

DTC P1297: ELD Circuit Low Voltage (2005-2006 models)

1. Turn the ignition switch ON (II).

2. Check the ELD in the DATA LIST with the HDS.

   Is 72 A or more indicated?

   YES—Go to step 3.

   NO—Intermittent failure, system is OK at this time. Check for poor connections or loose terminals at the ELD and the ECM/PCM. ■

3. Turn the ignition switch OFF.

4. Disconnect the ELD 3P connector.

5. Turn the ignition switch ON (II).

6. Check the ELD in the DATA LIST with the HDS.

   Is 72 A or more indicated?

   YES—Go to step 7.

   NO—Go to step 11.

7. Turn the ignition switch OFF.

8. Jump the SCS line with the HDS.

9. Disconnect ECM/PCM connector E (31P).

10. Check for continuity between ECM/PCM connector terminal E15 and body ground.

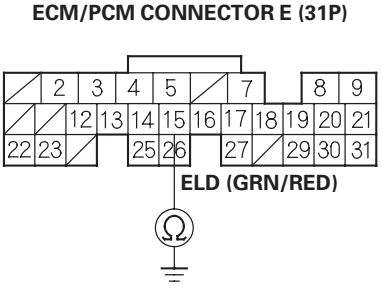

Wire side of female terminals

   Is there continuity?

   YES—Repair short in the wire between the ECM/PCM (E15) and the ELD, then go to step 13.

   NO—Go to step 20.

11. Turn the ignition switch OFF.

12. Replace the under-hood fuse/relay box.

13. Reconnect all connectors.

14. Turn the ignition switch ON (II).

15. Reset the ECM/PCM with the HDS.

16. Do the ECM/PCM idle learn procedure (see page 11-349).

17. Start the engine.

18. Turn on the headlights.

19. Check for Temporary DTCs or DTCs with the HDS.

   Are any Temporary DTCs or DTCs indicated?

   YES—If DTC P1297 is indicated, check for poor connections or loose terminals at the ELD and the ECM/PCM, then go to step 1. If any other Temporary DTCs or DTCs are indicated, go to the indicated DTC's troubleshooting.

   NO—Troubleshooting is complete. ■

(cont'd)

DTC Troubleshooting (cont'd)

20. Update the ECM/PCM if it does not have the latest software, or substitute a known-good ECM/PCM (see page 11-6).

21. Start the engine.

22. Turn on the headlights.

23. Check for Temporary DTCs or DTCs with the HDS.

    Are any Temporary DTCs or DTCs indicated?

    YES—If DTC P1297 is indicated, check for poor connections or loose terminals at the ELD and the ECM/PCM, then go to step 1. If any other Temporary DTCs or DTCs are indicated, go to the indicated DTC's troubleshooting.

    NO—If the ECM/PCM was updated, troubleshooting is complete. If the ECM/PCM was substituted, replace the original ECM/PCM (see page 11-284). ■

DTC P1298: ELD Circuit High Voltage (2002-2004 models)

1. Reset the ECM/PCM (see page 11-4).

2. Start the engine.

3. Turn on the headlights.

   Is DTC P1298 indicated?

   YES—Go to step 4.

   NO—Intermittent failure, system is OK at this time. Check for poor connections or loose terminals at the ELD and the ECM/PCM. ■

4. Turn the ignition switch and headlights OFF.

5. Disconnect the ELD 3P connector.

6. Turn the ignition switch ON (II).

7. Measure voltage between body ground and ELD 3P connector terminal No. 1.

ELD 3P CONNECTOR

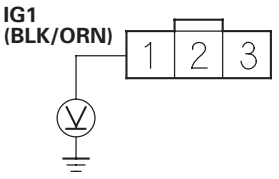

Wire side of female terminals

Is there battery voltage?

YES—Go to step 8.

NO—Check the No. 4 ACG (10 A) fuse in the under-dash fuse/relay box. If the fuse is OK, repair open in the wire between the No. 4 ACG (10 A) fuse and the ELD. ■

8. Turn the ignition switch OFF.

9. Connect ELD 3P connector terminal No. 3 and body ground with a jumper wire.

ELD 3P CONNECTOR

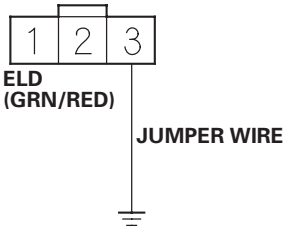

Wire side of female terminals

10. Disconnect ECM/PCM connector E (31P).

11. Check for continuity between body ground and ECM/PCM connector terminal E15.

ECM/PCM CONNECTOR E (31P)

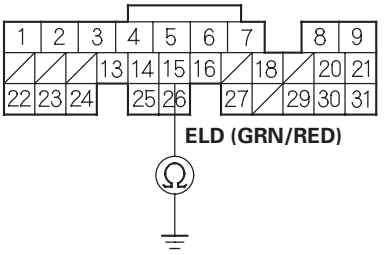

Wire side of female terminals

Is there continuity?

YES—Go to step 12.

NO—Repair open in the wire between the ECM/PCM (E15) and the ELD. ■

(cont'd)

DTC Troubleshooting (cont'd)

12. Check for continuity between ELD 3P connector terminal No. 2 and body ground.

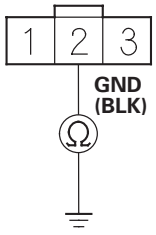

Wire side of female terminals

Is there continuity?

YES—Go to step 13.

NO—Repair open in the wire between the ELD and G301.■

13. Reconnect the ELD 3P connector and ECM/PCM connector E (31P).

14. Start the engine, and let it idle.

15. While measuring voltage between ECM/PCM connector terminals A24 and E15, turn the headlights on (high).

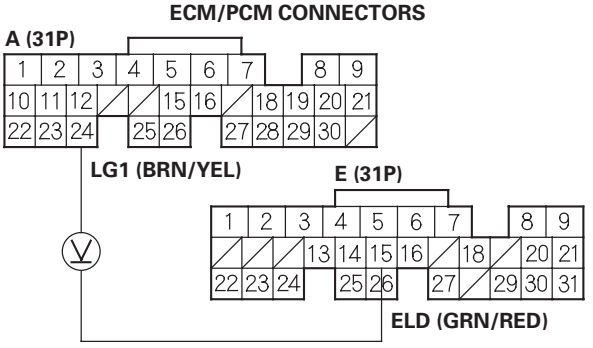

Wire side of female terminals

Does the voltage drop?

YES—Update the ECM/PCM if it does not have the latest software, or substitute a known-good ECM/PCM (see page 11-6), then recheck. If the symptom/indication goes away with a known-good ECM/PCM, replace the original ECM/PCM (see page 11-284).■

NO—Replace the ELD.■

DTC P1298: ELD Circuit High Voltage (2005-2006 models)

1. Start the engine, and let it idle.

2. Check the ELD in the DATA LIST with the HDS.

   Is 0.2 A or less indicated?

   YES—Go to step 3.

   NO—Intermittent failure, system is OK at this time. Check for poor connections or loose terminals at the ELD and the ECM/PCM. ■

3. Turn the ignition switch OFF.

4. Disconnect the ELD 3P connector.

5. Turn the ignition switch ON (II).

6. Measure voltage between ELD 3P connector terminal No. 1 and body ground.

ELD 3P CONNECTOR

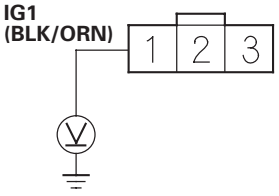

Wire side of female terminals

Is there battery voltage?

YES—Go to step 7.

NO—Repair open in the wire between the No. 4 ACG (10 A) fuse and the ELD, then go to step 14.

7. Turn the ignition switch OFF.

8. Connect ELD 3P connector terminal No. 3 to body ground with a jumper wire.

ELD 3P CONNECTOR

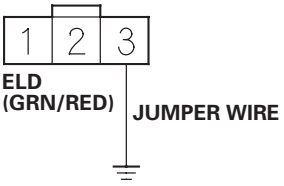

Wire side of female terminals

9. Jump the SCS line with the HDS.

10. Disconnect ECM/PCM connector E (31P).

11. Check for continuity between ECM/PCM connector terminal E15 and body ground.

ECM/PCM CONNECTOR E (31P)

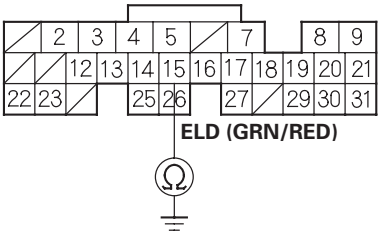

Wire side of female terminals

Is there continuity?

YES—Go to step 12.

NO—Repair open in the wire between the ECM/PCM (E15) and the ELD, then go to step 14.

(cont'd)

DTC Troubleshooting (cont'd)

12. Check for continuity between ELD 3P connector terminal No. 2 and body ground.

ELD 3P CONNECTOR

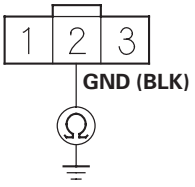

Wire side of female terminals

Is there continuity?

YES—Go to step 13.

NO—Repair open in the wire between the ELD and G301, then go to step 14.

13. Replace the under-hood fuse/relay box.

14. Reconnect all connectors.

15. Turn the ignition switch ON (II).

16. Reset the ECM/PCM with the HDS.

17. Do the ECM/PCM idle learn procedure (see page 11-349).

18. Check for Temporary DTCs or DTCs with the HDS.

Are any Temporary DTCs or DTCs with the HDS?

YES—Go to step 19.

NO—Troubleshooting is complete. ■

19. Update the ECM/PCM if it does not have the latest software, or substitute a known-good ECM/PCM (see page 11-6).

20. Check for Temporary DTCs or DTCs with the HDS.

Are any Temporary DTCs or DTCs indicated?

YES—If DTC P1298 is indicated, check for poor connections or loose terminals at the ELD and the ECM/PCM, then go to step 1. If any other Temporary DTCs or DTCs are indicated, go to the indicated DTC's troubleshooting.

NO—If the ECM/PCM was updated, troubleshooting is complete. If the ECM/PCM was substituted, replace the original ECM/PCM (see page 11-284). ■

DTC P1549: Charging System High Voltage (2005-2006 models)

NOTE: If a high voltage battery (24 V, etc.) is connected to the vehicle, this DTC can be stored.

1. Turn the ignition switch ON (II).

2. Clear the DTC with the HDS.

3. Start the engine.

4. Check under these conditions:

   - A/C off
   - Headlights off
   - Rear window defogger off

5. Hold the engine speed at 2,000 rpm (in Park or neutral) for 1 minute.

6. Check for Temporary DTCs or DTCs with the HDS.

   Is DTC P1549 indicated?

   YES—Replace the alternator (see page 4-46), then go to step 7.

   NO—Intermittent failure, system is OK at this time. Check for poor connections or loose terminals at the alternator and the under-hood fuse/relay box. ■

7. Turn the ignition switch ON (II).

8. Reset the ECM/PCM with the HDS.

9. Do the ECM/PCM idle learn procedure (see page 11-349).

10. Start the engine.

11. Check under these conditions:

    - A/C off
    - Headlights off
    - Rear window defogger off

12. Hold the engine speed at 2,000 rpm (in Park or neutral) for 1 minute.

13. Check for Temporary DTCs or DTCs with the HDS.

    Are any Temporary DTCs or DTCs indicated?

    YES—If DTC P1549 is indicated, check for poor connections or loose terminals at the alternator and the under-hood fuse/relay box, then go to step 1. If any other Temporary DTCs or DTCs are indicated, go to the indicated DTC's troubleshooting.

    NO—Troubleshooting is complete. ■

DTC Troubleshooting (cont'd)

DTC P16BB: Alternator B Terminal Circuit Low Voltage
(2005-2006 models)

1. Turn the ignition switch ON (II).

2. Clear the DTC with the HDS.

3. Start the engine.

4. Check under these conditions:

   - A/C on
   - Temperature control at maximum cool
   - Blower fan at maximum speed
   - Rear window defogger on
   - Headlights on high beam

5. Hold the engine speed at 2,000 rpm (in Park or neutral) for 1 minute.

6. Check for Temporary DTCs or DTCs with the HDS.

   Is DTC P16BB indicated?

   YES—Go to step 7.

   NO—Intermittent failure, system is OK at this time. Check for poor connections or loose terminals at the alternator and the under-hood fuse/relay box, and check the battery performance (see page 22-61). ■

7. Check for poor connections or loose terminals at the alternator and the under-hood fuse/relay box (+B line).

   Are the connections and terminals OK?

   YES—Go to step 8.

   NO—Reconnect the connectors or terminals, then go to step 9.

8. Check for an open in the wire between the alternator and under-hood fuse/relay box at the starter subharness.

   Is the harness OK?

   YES—Replace the alternator (see page 4-46), then go to step 9.

   NO—Repair open in the wire between the alternator and the under-hood fuse/relay box, then go to step 9.

9. Turn the ignition switch ON (II).

10. Reset the ECM/PCM with the HDS.

11. Do the ECM/PCM idle learn procedure (see page 11-349).

12. Start the engine.

13. Check under these conditions:

    - A/C on
    - Temperature control at maximum cool
    - Blower fan at maximum speed
    - Rear window defogger on
    - Headlights on high beam

14. Hold the engine speed at 2,000 rpm (in Park or neutral) for 1 minute.

15. Check for Temporary DTCs or DTCs with the HDS.

    Are any Temporary DTCs or DTCs indicated?

    YES—If DTC P16BB is indicated, check for poor connections or loose terminals at the alternator and the under-hood fuse/relay box, then go to step 1. If any other Temporary DTCs or DTCs are indicated, go to the indicated DTC's troubleshooting.

    NO—Troubleshooting is complete. ■

DTC P16BC: Alternator FR Terminal Circuit/ IGP Circuit Low Voltage (2005-2006 models)

1. Check for poor connections at the alternator 4P connector.

   Are the connections OK?

   YES—Go to step 2.

   NO—Reconnect the connector, then go to step 18.

2. Turn the ignition switch ON (II).

3. Clear the DTC with the HDS.

4. Start the engine.

5. Check under these conditions:

   - A/C on
   - Temperature control at maximum cool
   - Blower fan at maximum speed
   - Rear window defogger on
   - Headlights on high beam

6. Hold the engine speed at 2,000 rpm (in Park or neutral) for 1 minute.

7. Check for Temporary DTCs or DTCs with the HDS.

   Is DTC P16BC indicated?

   YES—Go to step 8.

   NO—Intermittent failure, system is OK at this time. Check for poor connections or loose terminals at the alternator. ■

8. Turn the ignition switch OFF.

9. Disconnect the alternator 4P connector.

10. Turn the ignition switch ON (II).

11. Measure voltage between alternator 4P connector terminal No. 1 and body ground.

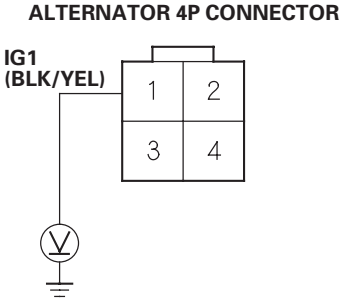

Wire side of female terminals

   Is there battery voltage?

   YES—Go to step 12.

   NO—Repair open in the wire between the alternator (IG1 line) and the No. 4 ACG (10 A) fuse in under-dash fuse/relay box, then go to step 18.

12. Measure voltage between alternator 4P connector terminal No. 4 and body ground.

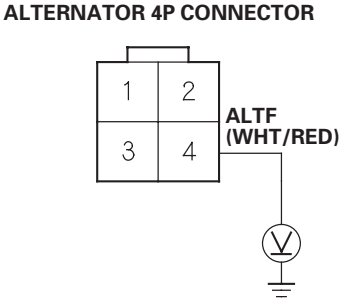

Wire side of female terminals

   Is there about 5 V?

   YES—Replace the rear housing assembly of alternator (see page 4-46), then go to step 18.

   NO—Go to step 13.

(cont'd)

DTC Troubleshooting (cont'd)

13. Turn the ignition switch OFF.

14. Jump the SCS line with the HDS.

15. Disconnect ECM/PCM connector B (24P).

16. Connect alternator 4P connector terminal No. 4 to body ground with a jumper wire.

ALTERNATOR 4P CONNECTOR

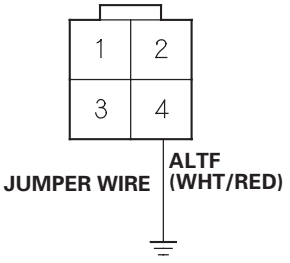

Wire side of female terminals

17. Check for continuity between ECM/PCM connector terminal B13 and body ground.

ECM/PCM CONNECTOR B (24P)

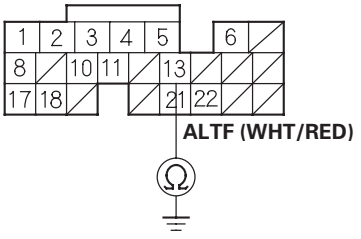

Wire side of female terminals

Is there continuity?

YES—Go to step 26.

NO—Repair open in the wire between the ECM/PCM (B13) and the alternator, then go to step 18.

18. Turn the ignition switch ON (II).

19. Reconnect all connectors.

20. Reset the ECM/PCM with the HDS.

21. Do the ECM/PCM idle learn procedure (see page 11-349).

22. Start the engine.

23. Check under these conditions:

    - A/C on
    - Temperature control at maximum cool
    - Blower fan at maximum speed
    - Rear window defogger on
    - Headlights on high beam

24. Hold the engine speed at 2,000 rpm (in Park or neutral) for 1 minute.

25. Check for Temporary DTCs or DTCs with the HDS.

    Are any Temporary DTCs or DTCs indicated?

    YES—If DTC P16BC is indicated, check for poor connections or loose terminals at the alternator and the ECM/PCM, then go to step 1. If any other Temporary DTCs or DTCs are indicated, go to the indicated DTC's troubleshooting.

    NO—Troubleshooting is complete. ■

26. Update the ECM/PCM if it does not have the latest software, or substitute a known-good ECM/PCM (see page 11-6).

27. Start the engine.

28. Check under these conditions:

    - A/C on
    - Temperature control at maximum cool
    - Blower fan at maximum speed
    - Rear window defogger on
    - Head lights on high beam

29. Hold the engine speed at 2,000 rpm (in Park or neutral) for 1 minute.

30. Check for Temporary DTCs or DTCs with the HDS.

    Are any Temporary DTCs or DTCs indicated?

    YES—If DTC P16BC is indicated, check for poor connections or loose terminals at the alternator and the ECM/PCM, then go to step 1. If any other Temporary DTCs or DTCs are indicated, go to the indicated DTC's troubleshooting.

    NO—If the ECM/PCM was updated, troubleshooting is complete. If the ECM/PCM was substituted, replace the original ECM/PCM (see page 11-284). ■

DTC Troubleshooting (cont'd)

DTC P2195: A/F Sensor (Sensor 1) Signal Stuck Lean (2005-2006 models)

NOTE: If the vehicle was out of fuel and the engine stalled before this DTC was stored, refuel and clear the DTC with the HDS.

1. Inspect the condition of the A/F sensor (Sensor 1).

   Is it loose in the exhaust pipe?

   YES—Go to step 2.

   NO—Go to step 4.

2. Turn the ignition switch OFF.

3. Reinstall the A/F sensor (Sensor 1) (see page 11-279).

4. Turn the ignition switch ON (II).

5. Reset the ECM/PCM with the HDS.

6. Do the ECM/PCM idle learn procedure (see page 11-349).

7. Check for Temporary DTCs or DTCs with the HDS.

   Are any Temporary DTCs or DTCs indicated?

   YES—If DTC P2195 is indicated, check for poor connections or loose terminals at the A/F sensor (Sensor 1) and the ECM/PCM. If the connection and terminal fits are OK, go to step 8. If any other Temporary DTCs or DTCs are indicated, go to the indicated DTC's troubleshooting.

   NO—Intermittent failure, system is OK at this time. Check for poor connections or loose terminals at the A/F sensor (Sensor 1) and the ECM/PCM. ■

8. Monitor the OBD STATUS for DTC P2195 in the DTCs MENU with the HDS.

   Does the screen indicate PASSED?

   YES—Troubleshooting is complete. ■

   NO—If the screen indicates FAILED, check for poor connections or loose terminals at the A/F sensor (Sensor 1) and the ECM/PCM, then go to step 2. If the screen indicates NOT COMPLETED, go to step 5 and recheck.

DTC P2227: BARO Sensor Circuit Range/ Performance Problem (2005-2006 models)

NOTE: If DTC P0107, P0108, P1128 and/or P1129 are stored at the same time as DTC P2227, troubleshoot those DTCs first, then recheck for DTC P2227.

1. Turn the ignition switch ON (II), and wait 2 seconds.

2. Check the BARO SENSOR in the DATA LIST with the HDS.

   Is about 101 kPa (29.9 in.Hg, 760 mmHg), or about 2.9 V at sea level indicated?

   YES—Go to step 3.

   NO—Update the ECM/PCM if it does not have the latest software, or substitute a known-good ECM/PCM (see page 11-6), then recheck. If the symptom/indication goes away with a known-good ECM/PCM, replace the original ECM/PCM (see page 11-284). ■

3. Clear the DTC with the HDS.

4. Start the engine. Hold the engine speed at 3,000 rpm without load (in Park or neutral) until the radiator fan comes on, then let it idle.

5. Test-drive under these conditions, then connect the HDS.

   - Engine coolant temperature above 158 ℉ (70 ℃)
   - A/T in D position (M/T in 4th gear)
   - Throttle position between 12 degrees and 20 degrees for 2 seconds

6. Monitor the OBD STATUS for DTC P2227 in the DTCs MENU with the HDS.

   Does the screen indicate FAILED?

   YES—Go to step 7.

   NO—If the screen indicates PASSED, intermittent failure, system is OK at this time. If the screen indicates NOT COMPLETED, go to step 4 and recheck.

7. Update the ECM/PCM if it does not have the latest software, or substitute a known-good ECM/PCM (see page 11-6).

8. Reset the ECM/PCM with the HDS.

9. Do the ECM/PCM idle learn procedure (see page 11-349).

10. Check for Temporary DTCs or DTCs with the HDS.

    Are any Temporary DTCs or DTCs indicated?

    YES—If DTC P2227 is indicated, check for poor connections or loose terminals at the ECM/PCM, then go to step 1. If any other Temporary DTCs or DTCs are indicated, go to the indicated DTC's troubleshooting.

    NO—If the ECM/PCM was updated, troubleshooting is complete. If the ECM/PCM was substituted, replace the original ECM/PCM (see page 11-284). ■

DTC Troubleshooting (cont'd)

DTC P2228: BARO Sensor Circuit Low Voltage (2005-2006 models)

1. Turn the ignition switch ON (II).

2. Check the BARO SENSOR in the DATA LIST with the HDS.

   Is about 53 kPa (15.6 in.Hg, 397 mmHg), 1.58 V or less indicated?

   YES—Go to step 3.

   NO—Intermittent failure, system is OK at this time. ■

3. Update the ECM/PCM if it does not have the latest software, or substitute a known-good ECM/PCM (see page 11-6).

4. Check for Temporary DTCs or DTCs with the HDS.

   Are any Temporary DTCs or DTCs indicated?

   YES—If DTC P2228 is indicated, check for poor connections or loose terminals at the ECM/PCM, then go to step 1. If any other Temporary DTCs or DTCs are indicated, go to the indicated DTC's troubleshooting.

   NO—If the ECM/PCM was updated, troubleshooting is complete. If the ECM/PCM was substituted, replace the original ECM/PCM (see page 11-284). ■

DTC P2229: BARO Sensor Circuit High Voltage (2005-2006 models)

1. Turn the ignition switch ON (II).

2. Check the BARO SENSOR in the DATA LIST with the HDS.

   Is about 160 kPa (47.2 in.Hg, 1200 mmHg), 4.5 V or more indicated?

   YES—Go to step 3.

   NO—Intermittent failure, system is OK at this time. ■

3. Update the ECM/PCM if it does not have the latest software, or substitute a known-good ECM/PCM (see page 11-6).

4. Check for Temporary DTCs or DTCs with the HDS.

   Are any Temporary DTCs or DTCs indicated?

   YES—If DTC P2229 is indicated, check for poor connections or loose terminals at the ECM/PCM, then go to step 1. If any other Temporary DTCs or DTCs are indicated, go to the indicated DTC's troubleshooting.

   NO—If the ECM/PCM was updated, troubleshooting is complete. If the ECM/PCM was substituted, replace the original ECM/PCM (see page 11-284). ■

DTC P2238: A/F Sensor (Sensor 1) AFS+ Circuit Low Voltage (2004 model)

1. Reset the ECM/PCM (see page 11-4).

2. Start the engine.

   Is DTC P2238 indicated?

   YES—Go to step 3.

   NO—Intermittent failure, system is OK at this time. Check for poor connections or loose terminals at the A/F sensor (Sensor 1) and the ECM/PCM. ■

3. Turn the ignition switch OFF.

4. Disconnect the A/F sensor (Sensor 1) 4P connector, and ECM/PCM connector A (31P).

5. Check for continuity between ECM/PCM connector terminal A6 and body ground.

ECM/PCM CONNECTOR A (31P)

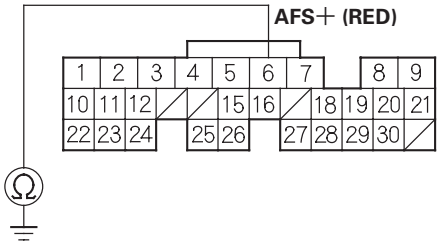

Wire side of female terminals

   Is there continuity?

   YES—Repair short in the wire between the A/F sensor (Sensor 1) and the ECM/PCM (A6). ■

   NO—Go to step 6.

6. Substitute a known-good A/F sensor (Sensor 1) and recheck.

   Is DTC P2238 indicated?

   YES—Update the ECM/PCM if it does not have the latest software, or substitute a known-good ECM/PCM (see page 11-6), then recheck. If the symptom/indication goes away with a known-good ECM/PCM, replace the original ECM/PCM (see page 11-284). ■

   NO—Replace the A/F sensor (Sensor 1) (see page 11-279). ■

DTC Troubleshooting (cont'd)

DTC P2238: A/F Sensor (Sensor 1) AFS+ Circuit Low Voltage (2005-2006 models)

1. Turn the ignition switch ON (II).
2. Clear the DTC with the HDS.
3. Check for Temporary DTCs or DTCs with the HDS.

   Is DTC P2238 indicated?

   YES—Go to step 4.

   NO—Intermittent failure, system is OK at this time. Check for poor connections or loose terminals at the A/F sensor (Sensor 1) and the ECM/PCM. ■
4. Turn the ignition switch OFF.
5. Jump the SCS line with the HDS.
6. Disconnect the A/F sensor (Sensor 1) 4P connector.
7. Disconnect ECM/PCM connector A (31P).
8. Check for continuity between ECM/PCM connector terminal A31 and body ground.

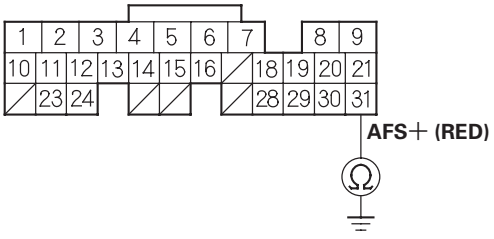

Wire side of female terminals

   Is there continuity?

   YES—Repair short in the wire between the ECM/PCM (A31) and the A/F sensor (Sensor 1), then go to step 11.

   NO—Go to step 9.
9. Replace the A/F sensor (Sensor 1) (see page 11-279).
10. Reconnect all connectors.
11. Turn the ignition switch ON (II).
12. Reset the ECM/PCM with the HDS.
13. Do the ECM/PCM idle learn procedure (see page 11-349).
14. Check for Temporary DTCs or DTCs with the HDS.

    Are any Temporary DTCs or DTCs indicated?

    YES—If DTC P2238 is indicated, check for poor connections or loose terminals at the A/F sensor (Sensor 1) and the ECM/PCM. If the connector and terminal fits are OK, go to step 16. If any other Temporary DTCs or DTCs are indicated, go to the indicated DTC's troubleshooting.

    NO—Go to step 15.
15. Monitor the OBD STATUS for DTC P2238 in the DTCs MENU with the HDS.

    Does the screen indicate PASSED?

    YES—Troubleshooting is complete. ■

    NO—If the screen indicates FAILED, check for poor connections or loose terminals at the A/F sensor (Sensor 1) and the ECM/PCM, then go to step 1. If the screen indicates NOT COMPLETED, go to step 13 and recheck.
16. Update the ECM/PCM if it does not have the latest software, or substitute a known-good ECM/PCM (see page 11-6).
17. Check for Temporary DTCs or DTCs with the HDS.

    Is DTC P2238 indicated?

    YES—Go to step 1 and recheck.

    NO—If the ECM/PCM was updated, troubleshooting is complete. If the ECM/PCM was substituted, replace the original ECM/PCM (see page 11-284). ■

DTC P2252: A/F Sensor (Sensor 1) AFS— Circuit Low Voltage (2004 model)

1. Reset the ECM/PCM (see page 11-4).

2. Start the engine.

   Is DTC P2252 indicated?

   YES—Go to step 3.

   NO—Intermittent failure, system is OK at this time. Check for poor connections or loose terminals at the A/F sensor (Sensor 1) and the ECM/PCM. ■

3. Turn the ignition switch OFF.

4. Disconnect the A/F sensor (Sensor 1) 4P connector, and ECM/PCM connector A (31P).

5. Check for continuity between ECM/PCM connector terminal A16 and body ground.

ECM/PCM CONNECTOR A (31P)

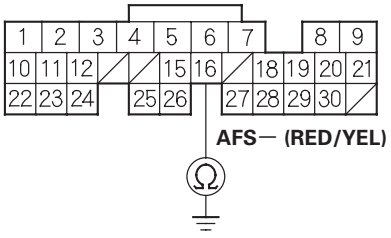

Wire side of female terminals

   Is there continuity?

   YES—Repair short in the wire between the A/F sensor (Sensor 1) and the ECM/PCM (A16). ■

   NO—Go to step 6.

6. Substitute a known-good A/F sensor (Sensor 1) and recheck.

   Is DTC P2252 indicated?

   YES—Update the ECM/PCM if it does not have the latest software, or substitute a known-good ECM/PCM (see page 11-6), then recheck. If the symptom/indication goes away with a known-good ECM/PCM, replace the original ECM/PCM (see page 11-284). ■

   NO—Replace the A/F sensor (Sensor 1) (see page 11-279). ■

DTC Troubleshooting (cont'd)

DTC P2252: A/F Sensor (Sensor 1) AFS—Circuit Low Voltage (2005-2006 models)

1. Turn the ignition switch ON (II).
2. Clear the DTC with the HDS.
3. Start the engine.
4. Check for Temporary DTCs or DTCs with the HDS.

   Is DTC P2252 indicated?

   YES—Go to step 5.

   NO—Intermittent failure, system is OK at this time. Check for poor connections or loose terminals at the A/F sensor (Sensor 1) and the ECM/PCM. ■
5. Turn the ignition switch OFF.
6. Jump the SCS line with the HDS.
7. Disconnect the A/F sensor (Sensor 1) 4P connector.
8. Disconnect ECM/PCM connector A (31P).
9. Check for continuity between ECM/PCM connector terminal A28 and body ground.

ECM/PCM CONNECTOR A (31P)

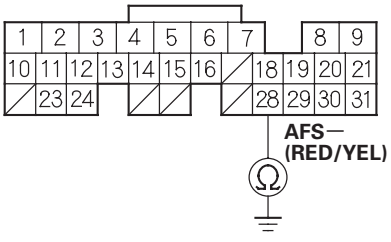

Wire side of female terminals

Is there continuity?

YES—Repair short in the wire between the ECM/PCM (A28) and the A/F sensor (Sensor 1), then go to step 12.

NO—Go to step 10.

10. Replace the A/F sensor (Sensor 1) (see page 11-279).
11. Reconnect all connectors.
12. Turn the ignition switch ON (II).
13. Reset the ECM/PCM with the HDS.
14. Do the ECM/PCM idle learn procedure (see page 11-349).
15. Check for Temporary DTCs or DTCs with the HDS.

    Are any Temporary DTCs or DTCs indicated?

    YES—If DTC P2252 is indicated, check for poor connections or loose terminals at the A/F sensor (Sensor 1) and the ECM/PCM. If the connector and terminal fits are OK, go to step 17. If any other Temporary DTCs or DTCs are indicated, go to the indicated DTC's troubleshooting.

    NO—Go to step 16.
16. Monitor the OBD STATUS for DTC P2252 in the DTCs MENU with the HDS.

    Does the screen indicate PASSED?

    YES—Troubleshooting is complete. ■

    NO—If the screen indicates FAILED, check for poor connections or loose terminals at the A/F sensor (Sensor 1) and the ECM/PCM, then go to step 1. If the screen indicates NOT COMPLETED, go to step 14 and recheck.
17. Update the ECM/PCM if it does not have the latest software, or substitute a known-good ECM/PCM (see page 11-6).
18. Check for Temporary DTCs or DTCs with the HDS.

    Is DTC P2252 indicated?

    YES—Go to step 1 and recheck.

    NO—If the ECM/PCM was updated, troubleshooting is complete. If the ECM/PCM was substituted, replace the original ECM/PCM (see page 11-284). ■

DTC P2270: Secondary HO2S (Sensor 2) Circuit Signal Stuck Lean (2005-2006 models)

DTC P2271: Secondary HO2S (Sensor 2) Circuit Signal Stuck Rich (2005-2006 models)

1. Turn the ignition switch ON (II).

2. Clear the DTC with the HDS.

3. Start the engine. Hold the engine speed at 3,000 rpm without load (in Park or neutral) until the radiator fan comes on, then let it idle.

4. Test-drive under these conditions:

   - Engine coolant temperature above 176 °F (80 °C)
   - Vehicle speed at 35 mph (56 km/h) or more
   - Drive 20 seconds or more

5. Monitor the OBD STATUS for DTC P2270 or P2271 in the DTCs MENU with the HDS.

   Does the screen indicate FAILED?

   YES—Go to step 6.

   NO—If the screen indicates PASSED, intermittent failure, system is OK at this time. Check for poor connections or loose terminals at the secondary HO2S (Sensor 2) and the ECM/PCM. If the screen indicates EXECUTING, keep driving until a result comes on. If the screen indicates OUT OF CONDITION, go to step 3 and recheck.

6. Turn the ignition switch OFF.

7. Replace the secondary HO2S (Sensor 2) (see page 11-279).

8. Turn the ignition switch ON (II).

9. Reset the ECM/PCM with the HDS.

10. Do the ECM/PCM idle learn procedure (see page 11-349).

11. Start the engine. Hold the engine speed at 3,000 rpm without load (in Park or neutral) until the radiator fan comes on, then let it idle.

12. Test-drive under these conditions:

    - Engine coolant temperature above 176 °F (80 °C)
    - Vehicle speed at 35 mph (56 km/h) or more
    - Drive 20 seconds or more

13. Check for Temporary DTCs or DTCs with the HDS.

    Are any Temporary DTCs or DTCs indicated?

    YES—If DTC P2270 or P2271 is indicated, check for poor connections or loose terminals at the secondary HO2S (Sensor 2) and the ECM/PCM, then go to step 1. If any other Temporary DTCs or DTCs are indicated, go to the indicated DTC's troubleshooting.

    NO—Go to step 14.

14. Monitor the OBD STATUS for DTC P2270 or P2271 in the DTCs MENU with the HDS.

    Does the screen indicate PASSED?

    YES—Troubleshooting is complete. ■

    NO—If the screen indicates FAILED, check for poor connections or loose terminals at the secondary HO2S (Sensor 2) and the ECM/PCM, then go to step 1. If the screen indicates EXECUTING, keep driving until a result comes on. If the screen indicates OUT OF CONDITION, go to step 11 and recheck.

DTC Troubleshooting (cont'd)

DTC P2610: ECM/PCM Internal Ignition Off Internal Timer Malfunction (2005-2006 models)

1. Turn the ignition switch ON (II).
2. Clear the DTC with the HDS.
3. Check for Temporary DTCs or DTCs with the HDS.

   Is DTC P2610 indicated?

   YES—Update the ECM/PCM if it does not have the latest software, or substitute a known-good ECM/PCM (see page 11-6), then recheck. If the symptom/indication goes away with a known-good ECM/PCM, replace the original ECM/PCM (see page 11-284). ■

   NO—Intermittent failure, system is OK at this time. ■

DTC P2A00: A/F Sensor (Sensor 1) Circuit Range/Performance Problem (2005-2006 models)

NOTE: Information marked with asterisk (*) applies to K20Z1 engine.

1. Turn the ignition switch ON (II).

2. Clear the DTC with the HDS.

3. Start the engine. Hold the engine speed at 3,000 rpm without load (in Park or neutral) until the radiator fan comes on, then let it idle.

4. Test-drive under these conditions:

   - Engine coolant temperature above 158 °F (70 °C)
   - A/T in D position (M/T in 3rd gear)
   - Drive the vehicle between 25—55 mph (40—88 km/h) for 5 minutes
   - Drive at a steady speed between 55—75 mph (88—120 km/h) for 10 seconds, then slow down with the throttle completely closed for 4 seconds

5. Monitor the OBD STATUS for DTC P2A00 in the DTCs MENU with the HDS.

   Does the screen indicate FAILED?

   YES—Go to step 6.

   NO—If the screen indicates PASSED, intermittent failure, system is OK at this time. Check for poor connections or loose terminals at the A/F sensor (Sensor 1) and the ECM/PCM. If the screen indicates EXECUTING, keep driving until a result comes on. If the screen indicates OUT OF CONDITION, go to step 3 and recheck.

6. Turn the ignition switch OFF.

7. Replace the A/F sensor (Sensor 1) (see page 11-279).

8. Turn the ignition switch ON (II).

9. Reset the ECM/PCM with the HDS.

10. Do the ECM/PCM idle learn procedure (see page 11-349).

11. Test-drive under these conditions:

    - Engine coolant temperature above 158 °F (70 °C)
    - A/T in D position (M/T in 3rd gear)
    - Drive the vehicle between 25—55 mph (40—88 km/h) for 5 minutes
    - Drive at a steady speed between 55—75 mph (88—120 km/h) for 10 seconds, then slow down with the throttle completely closed for 4 seconds

12. Check for Temporary DTCs or DTCs with the HDS.

    Are any Temporary DTCs or DTCs indicated?

    YES—If DTC P2A00 is indicated, check for poor connections or loose terminals at the A/F sensor (Sensor 1) and the ECM/PCM, then go to step 1. If any other Temporary DTCs or DTCs are indicated, go to the indicated DTC's troubleshooting.

    NO—Go to step 13.

13. Monitor the OBD STATUS for DTC P2A00 in the DTCs MENU with the HDS.

    Does the screen indicate PASSED?

    YES—Troubleshooting is complete. ■

    NO—If the screen indicates FAILED, check for poor connections or loose terminals at the A/F sensor (Sensor 1) and the ECM/PCM, then go to step 1. If the screen indicates EXECUTING, keep driving until a result comes on. If the screen indicates OUT OF CONDITION, go to step 10 and recheck.

MIL Circuit Troubleshooting

2002-2004 models

1. Connect a scan tool or the HDS to the DLC (see page 11-3).

2. Turn the ignition switch ON (II) and read a scan tool or the HDS.

   Does a scan tool or the HDS communicate with the ECM/PCM?

   YES—Go to step 3.

   NO—Go to troubleshooting ''DLC Circuit Troubleshooting'' (see page 11-273).

3. Check a scan tool or the HDS for DTCs.

   Are any DTCs indicated?

   YES—Go to the indicated DTC's troubleshooting. ■

   NO—Go to step 4.

4. Turn the ignition switch OFF.

5. Turn the ignition switch ON (II) and watch the malfunction indicator lamp (MIL).

   Does the MIL come on and stay on for more than 20 seconds?

   YES—If the MIL stays on, go to step 74. But if the MIL sometimes works normally, first check for these problems.

   - An intermittent short in the wire between the ECM/PCM (E29) and the data link connector (DLC).
   - An intermittent short in the wire between the ECM/PCM (E31) and the gauge assembly.
   - The readiness codes are not set (see page 11-90). (This is indicated if the MIL blinks 5 times after you turn the ignition switch ON (II) and wait about 20 seconds.)

   NO—If the MIL is always off, go to step 6. But if the MIL sometimes works normally, first check for these problems:

   - A loose No. 10 METER (7.5 A) fuse in the under-dash fuse/relay box.
   - A loose No. 20 IG (USA: 40 A, Canada: 50 A) fuse in the under-hood fuse/relay box.
   - A loose No. 6 ECU (ECM/PCM) (15 A) fuse in the under-hood fuse/relay box.
   - A loose No. 17 FUEL PUMP (15 A) fuse in the under-dash fuse/relay box.
   - A poor connection at ECM/PCM terminal E31.
   - An intermittent open in the GRN/ORN wire between the ECM/PCM (E31) and the gauge assembly.
   - An intermittent short in the wire between the ECM/PCM (A21) and the manifold absolute pressure (MAP) sensor, intake manifold tuning (IMT) (intake manifold runner control (IMRC)) valve position sensor, or output shaft (countershaft) speed sensor (A/T).
   - An intermittent short in the wire between the ECM/PCM (A20) and the throttle position (TP) sensor, input shaft (mainshaft) speed sensor (A/T).
   - An intermittent short in the wire between the ECM/PCM (E5) and the fuel tank pressure (FTP) sensor.

6. Check the low oil pressure indicator (with the ignition switch ON).

   Is the low oil pressure indicator on?

   YES—Go to step 9.

   NO—Go to step 7.

7. Inspect the No. 10 METER (7.5 A) fuse in the under-dash fuse/relay box.

   Is the fuse OK?

   YES—Go to step 8.

   NO—Repair short in the wire between No. 10 METER (7.5 A) fuse and the gauge assembly. Also replace the No. 10 METER (7.5 A) fuse. ■

8. Inspect the No. 20 IG (USA: 40 A, Canada: 50 A) fuse in the under-hood fuse/relay box.

   Is the fuse OK?

   YES—Repair open in the wire between the No. 20 IG (USA: 40 A, Canada: 50 A) fuse and the gauge assembly. If the wires are OK, test the ignition switch (see page 22-104).

   NO—Repair short in the wire between No. 20 IG (USA: 40 A, Canada: 50 A) fuse and the under-dash fuse/relay box. Also replace the No. 20 IG (USA: 40 A, Canada: 50 A) fuse. ■

9. Try to start the engine.

   Does the engine start?

   YES—Go to step 10.

   NO—Go to step 13.

10. Turn the ignition switch OFF.

11. Connect ECM/PCM connector terminal E31 to body ground with a jumper wire.

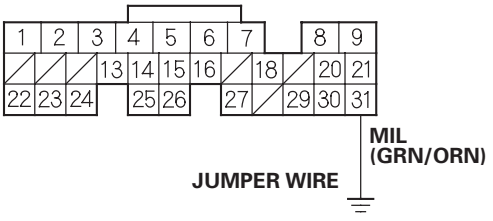

Wire side of female terminals

12. Turn the ignition switch ON (II).

    Is the MIL on?

    YES—Update the ECM/PCM if it does not have the latest software, or substitute a known-good ECM/PCM (see page 11-6), then recheck. If the symptom/indication goes away with a known-good ECM/PCM, replace the original ECM/PCM (see page 11-284). ■

    NO—Check for an open in the wire between the ECM/PCM (E31) and the gauge assembly. Also check for a blown MIL bulb. If the wires and the bulb are OK, replace the gauge assembly. ■

13. Turn the ignition switch OFF.

14. Inspect the No. 6 ECU (ECM/PCM) (15 A) fuse in the under-hood fuse/relay box.

    Is the fuse OK?

    YES—Go to step 22.

    NO—Go to step 15.

(cont'd)

MIL Circuit Troubleshooting (cont'd)

15. Remove the blown No. 6 ECU (ECM/PCM) (15 A) fuse in the under-dash fuse/relay box.

16. Remove the glove box (see page 20-67).

17. Remove PGM-FI main relay 1 (FI MAIN) (A).

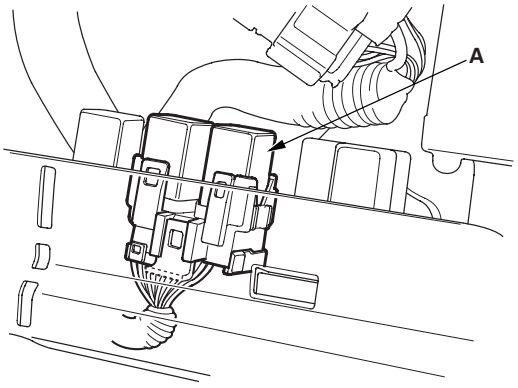

18. Check for continuity between body ground and the PGM-FI main relay 1 (FI MAIN) 4P connector terminals No. 2 and No. 4 individually.

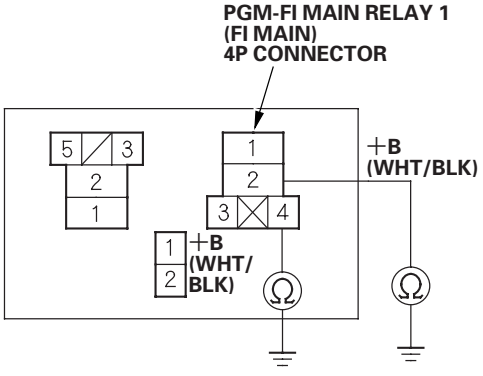

Wire side of female terminals

Is there continuity?

YES—Repair short in the wire between the No. 6 ECU (ECM/PCM) (15 A) fuse and PGM-FI main relay 1 (FI MAIN). Also replace the No. 6 ECU (ECM/PCM) (15 A) fuse.■

NO—Go to step 19.

19. Disconnect each of the components or connectors below, one at a time, and check for continuity between PGM-FI main relay 1 (FI MAIN) 4P connector terminal No. 1 and body ground.

- PGM-FI main relay 2 (FUEL PUMP)
- ECM/PCM connector A (31P)
- Each injector 2P connector
- Idle air control (IAC) valve 3P connector
- Camsahft position (CMP) sensor B 3P connector
- Crankshaft position (CKP) sensor 3P connector
- Immobilizer control unit

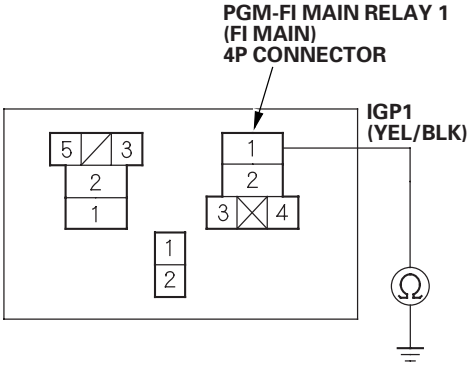

Wire side of female terminals

Is there continuity?

YES—Go to step 20.

NO—Replace the component that made the short to body ground go away when disconnected. If the item is the ECM/PCM, update the ECM/PCM if it does not have the latest software, or substitute a known-good ECM/PCM (see page 11-6), then recheck. If the symptom/indication goes away with a known-good ECM/PCM, replace the original ECM/PCM (see page 11-284).
Also replace the No. 6 ECU (ECM/PCM) (15 A) fuse.■

20. Disconnect the connectors of these components:

- PGM-FI main relay 2 (FUEL PUMP)
- ECM/PCM connector A (31P)
- Injectors
- Idle air control (IAC) valve
- Camshaft position (CMP) sensor B
- Crankshaft position (CKP) sensor
- Immobilizer control unit

21. Check for continuity between PGM-FI main relay 1 (FI MAIN) 4P connector terminal No. 1 and body ground.

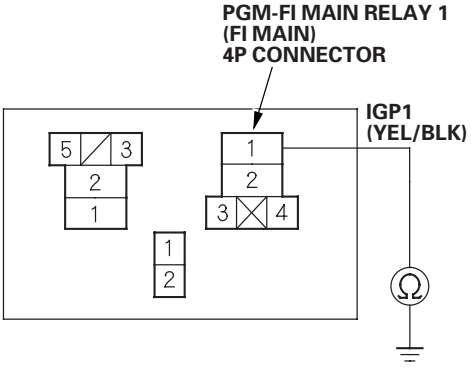

Wire side of female terminals

Is there continuity?

YES—Repair short in the wire between PGM-FI main relay 1 (FI MAIN) and each item. Also replace the No. 6 ECU (ECM/PCM) (15 A) fuse. ■

NO—Replace PGM-FI main relay 1 (FI MAIN). Also replace the No. 6 ECU (ECM/PCM) (15 A) fuse. ■

22. Inspect the No. 17 FUEL PUMP (15 A) fuse in the under-dash fuse/relay box.

Is the fuse OK?

YES—Go to step 34.

NO—Go to step 23.

23. Remove the blown No. 17 FUEL PUMP (15 A) fuse in the under-dash fuse/relay box.

24. Disconnect ECM/PCM connector E (31P).

25. Check for continuity between ECM/PCM connector terminal E9 and body ground.

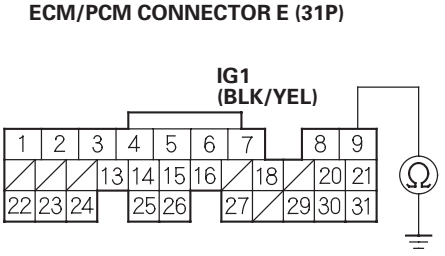

Wire side of female terminals

Is there continuity?

YES—Go to step 26.

NO—Replace the No. 17 FUEL PUMP (15 A) fuse, and update the ECM/PCM if it does not have the latest software, or substitute a known-good ECM/PCM (see page 11-6), then recheck. If the symptom/indication goes away with a known-good ECM/PCM, replace the original ECM/PCM (see page 11-284). ■

26. Remove PGM-FI main relay 2 (FUEL PUMP) (A).

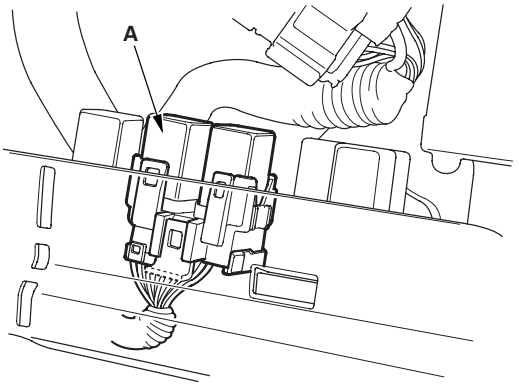

(cont'd)

MIL Circuit Troubleshooting (cont'd)

27. Check for continuity between ECM/PCM connector terminal E9 and body ground.

ECM/PCM CONNECTOR E (31P)

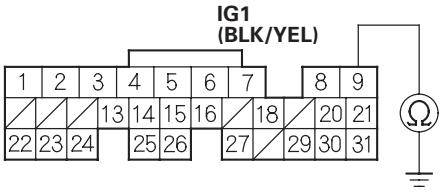

Wire side of female terminals

Is there continuity?

YES—Repair short in the wire between the No. 17 FUEL PUMP (15 A) fuse and the ECM/PCM (E9), or the No. 17 FUEL PUMP (15 A) fuse and PGM-FI main relay 2 (FUEL PUMP) or the No.17 fuel pump fuse (15 A) and the SRS unit. Also replace the No. 17 FUEL PUMP (15 A) fuse.■

NO—Go to step 28.

28. Remove the rear seat cushion (see page 20-85).

29. Remove the access panel from the floor.

30. Disconnect the fuel pump 5P connector.

31. Check for continuity between fuel pump 5P connector terminal No. 5 and body ground.

FUEL PUMP 5P CONNECTOR

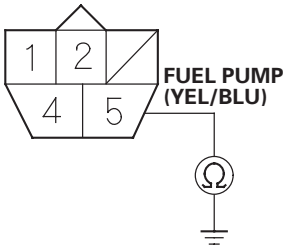

Wire side of female terminals

Is there continuity?

YES—Repair short in the wire between the fuel pump and PGM-FI main relay 2 (FUEL PUMP). Also replace the No. 17 FUEL PUMP (15 A) fuse.■

NO—Go to step 32.

32. Reinstall PGM-FI main relay 2 (FUEL PUMP) (A).

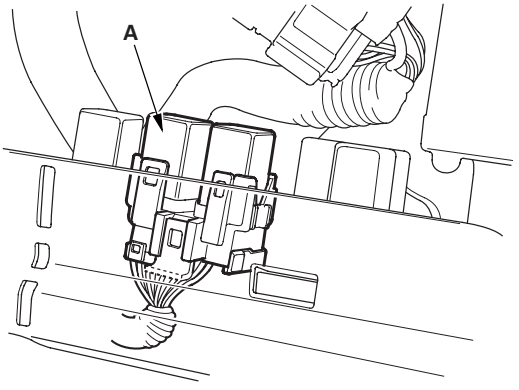

33. Check for continuity between fuel pump 5P connector terminal No. 5 and body ground.

FUEL PUMP 5P CONNECTOR

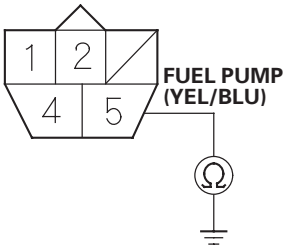

Wire side of female terminals

Is there continuity?

YES—Replace PGM-FI main relay 2 (FUEL PUMP). Also replace the No. 17 FUEL PUMP (15 A) fuse. ■

NO—Check the fuel pump, and replace it if necessary. Also replace the No. 17 FUEL PUMP (15 A) fuse. ■

34. Disconnect ECM/PCM connector E (31P).

35. Turn the ignition switch ON (II).

36. Measure voltage between ECM/PCM connector terminal E9 and body ground.

ECM/PCM CONNECTOR E (31P)

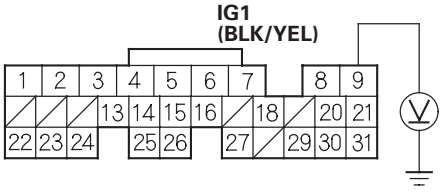

Wire side of female terminals

Is there battery voltage?

YES—Go to step 37.

NO—Repair open in the wire between the No. 17 FUEL PUMP (15 A) fuse and the ECM/PCM (E9). ■

37. Turn the ignition switch OFF.

38. Measure voltage between ECM/PCM connector terminal E7 and body ground.

ECM/PCM CONNECTOR E (31P)

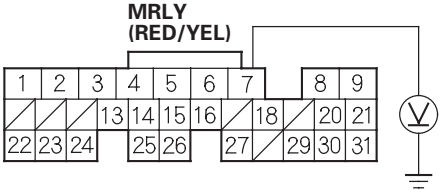

Wire side of female terminals

Is there battery voltage?

YES—Go to step 42.

NO—Go to step 39.

39. Remove PGM-FI main relay 1 (FI MAIN) (A).

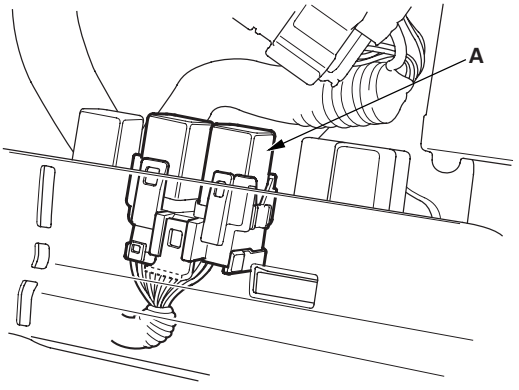

(cont'd)

MIL Circuit Troubleshooting (cont'd)

40. Measure voltage between PGM-FI main relay 1 (FI MAIN) 4P connector terminal No. 4 and body ground.

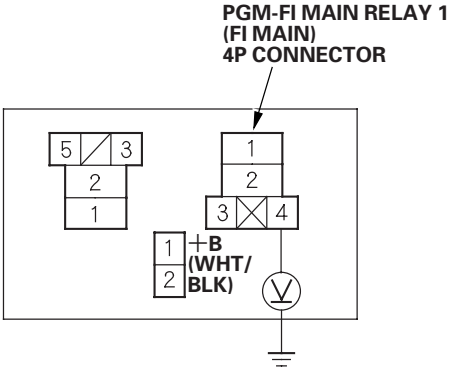

Is there battery voltage?

YES—Go to step 41.

NO—Repair open in the wire between the No. 6 ECU (ECM/PCM) (15 A) fuse and PGM-FI main relay 1 (FI MAIN). ■

41. Check for continuity between PGM-FI main relay 1 (FI MAIN) 4P connector terminal No. 3 and ECM/PCM connector terminal E7.

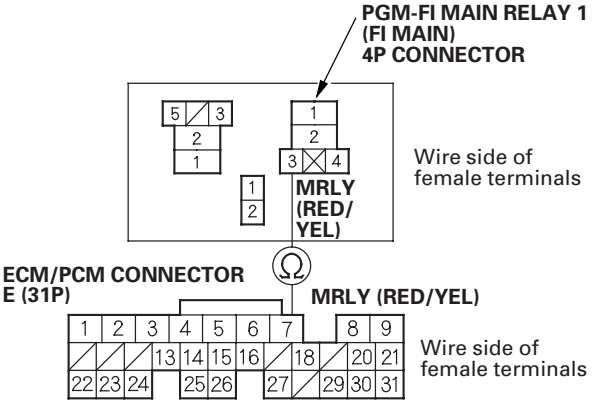

Is there continuity?

YES—Test PGM-FI main relay 1 (FI MAIN) (see page 22-62). If the relay is OK, update the ECM/PCM if it does not have the latest software, or substitute a known-good ECM/PCM (see page 11-6), then recheck. If the symptom/indication goes away with a known-good ECM/PCM, replace the original ECM/PCM (see page 11-284). ■

NO—Repair open in the wire between PGM-FI main relay 1 (FI MAIN) and the ECM/PCM (E7). ■

42. Reconnect ECM/PCM connector E (31P).

43. Turn the ignition switch ON (II).

44. Measure voltage between body ground and ECM/PCM connector terminals A2 and A3 individually.

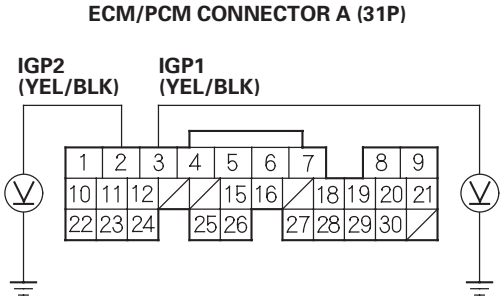

Wire side of female terminals

Is there battery voltage?

YES—Go to step 51.

NO—Go to step 45.

45. Turn the ignition switch OFF.

46. Remove PGM-FI main relay 1 (FI MAIN) (A).

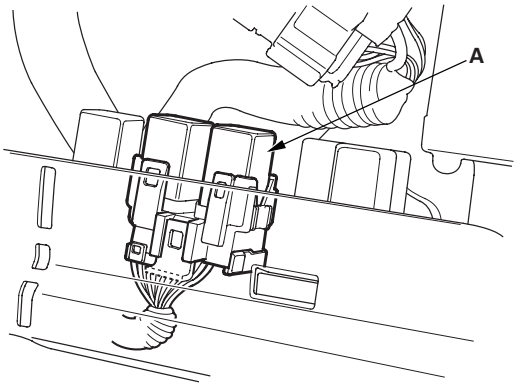

47. Turn the ignition switch ON (II).

48. Measure voltage between PGM-FI main relay 1 (FI MAIN) 4P connector terminal No. 2 and body ground.

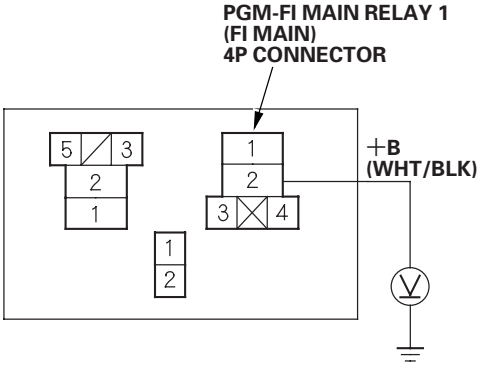

Wire side of female terminals

Is there battery voltage?

YES—Go to step 49.

NO—Repair open in the wire between the No. 6 ECU (ECM/PCM) (15 A) fuse and PGM-FI main relay 1 (FI MAIN). ■

49. Turn the ignition switch OFF.

50. Check for continuity between PGM-FI main relay 1 (FI MAIN) 4P connector terminal No. 1 and ECM/PCM connector terminals A2 and A3 individually.

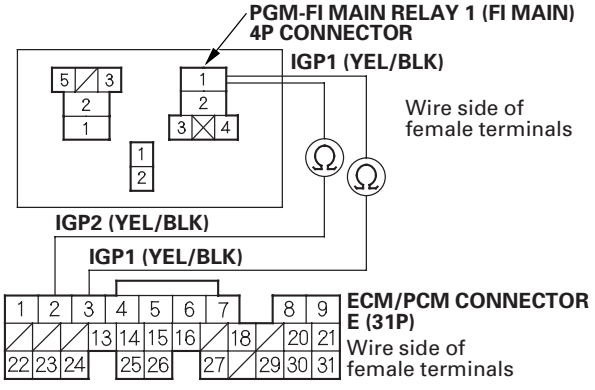

Is there continuity?

YES—Replace PGM-FI main relay 1 (FI MAIN). ■

NO—Repair open in the wire between PGM-FI main relay 1 (FI MAIN) and the ECM/PCM (A2, A3). ■

(cont'd)

MIL Circuit Troubleshooting (cont'd)

51. Measure voltage between body ground and ECM/PCM connector terminals A4, A5, A23, and A24 individually.

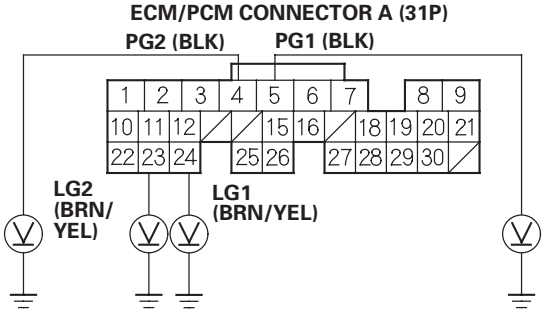

Wire side of female terminals

Is there more than 0.2 V?

YES—Repair open in the wire(s) that had more than 0.2 V between G101 and the ECM/PCM (A4, A5, A23, A24). ■

NO—Go to step 52.

52. Measure voltage between body ground and ECM/PCM connector terminal A21.

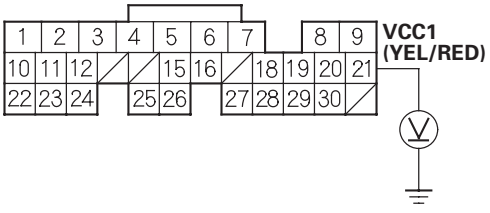

Wire side of female terminals

Is there about 5 V?

YES—Go to step 59.

NO—Go to step 53.

53. Turn the ignition switch OFF.

54. Disconnect the 3P connector from each of these sensors, one at a time, and measure voltage between body ground and ECM/PCM connector terminal A21 with the ignition switch ON (II).

- Manifold absolute pressure (MAP) sensor
- Intake manifold tuning (intake manifold runner control (IMRC)) valve position sensor (K20A3 engine)
- Output shaft (countershaft) speed sensor (A/T)

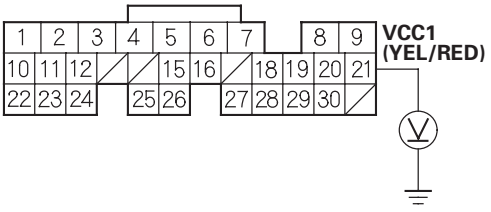

Wire side of female terminals

Is there about 5 V?

YES—Replace the sensor that restored 5 V when disconnected. ■

NO—Go to step 55.

55. Turn the ignition switch OFF.

56. Disconnect the 3P connectors from these sensors:

- Manifold absolute pressure (MAP) sensor
- Intake manifold tuning (intake manifold runner control (IMRC)) valve position sensor (K20A3 engine)
- Output shaft (countershaft) speed sensor (A/T)

57. Disconnect ECM/PCM connector A (31P).

58. Check for continuity between ECM/PCM connector terminal A21 and body ground.

ECM/PCM CONNECTOR A (31P)

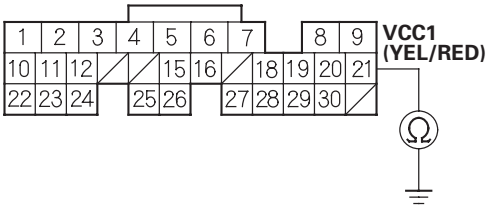

Wire side of female terminals

Is there continuity?

YES—Repair short in the wire between the ECM/PCM (A21) and the MAP sensor, the IMT (IMRC) valve position sensor, or the output shaft (countershaft) speed sensor (A/T). ■

NO—Update the ECM/PCM if it does not have the latest software, or substitute a known-good ECM/PCM (see page 11-6), then recheck. If the symptom/indication goes away with a known-good ECM/PCM, replace the original ECM/PCM (see page 11-284). ■

59. Measure voltage between body ground and ECM/PCM connector terminal A20.

ECM/PCM CONNECTOR A (31P)

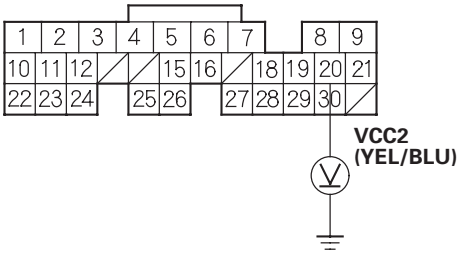

Wire side of female terminals

Is there about 5 V?

YES—Go to step 66.

NO—Go to step 60.

60. Turn the ignition switch OFF.

61. Disconnect the 3P connector from each of these sensors, one at a time, and measure voltage between body ground and ECM/PCM connector terminal A20 with the ignition switch ON (II).

- Throttle position (TP) sensor
- Input shaft (mainshaft) speed sensor (A/T)

ECM/PCM CONNECTOR A (31P)

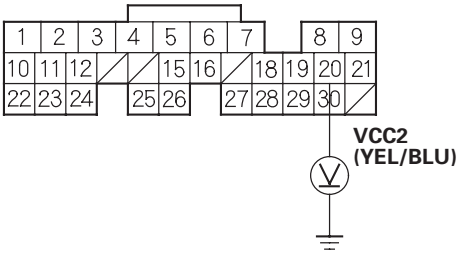

Wire side of female terminals

Is there about 5 V?

YES—Replace the sensor that restored 5 V when disconnected. ■

NO—Go to step 62.

62. Turn the ignition switch OFF.

63. Disconnect the 3P connectors from these sensors:

- Throttle position (TP) sensor
- Input shaft (mainshaft) speed sensor (A/T)

64. Disconnect ECM/PCM connector A (31P).

(cont'd)

MIL Circuit Troubleshooting (cont'd)

65. Check for continuity between ECM/PCM connector terminal A20 and body ground.

ECM/PCM CONNECTOR A (31P)

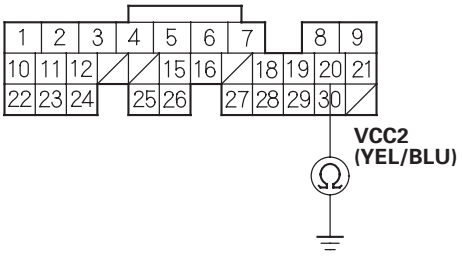

Wire side of female terminals

Is there continuity?

YES—Repair short in the wire between the ECM/PCM (A20) and the TP sensor or input shaft (mainshaft) speed sensor (A/T). ■

NO—Update the ECM/PCM if it does not have the latest software, or substitute a known-good ECM/PCM (see page 11-6), then recheck. If the symptom/indication goes away with a known-good ECM/PCM, replace the original ECM/PCM (see page 11-284). ■

66. Measure voltage between body ground and ECM/PCM connector terminal E5.

ECM/PCM CONNECTOR E (31P)

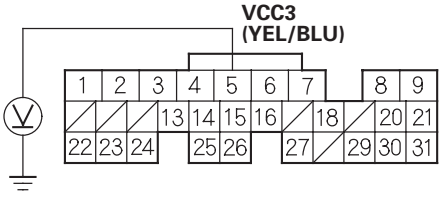

Wire side of female terminals

Is there about 5 V?

YES—Update the ECM/PCM if it does not have the latest software, or substitute a known-good ECM/PCM (see page 11-6), then recheck. If the symptom/indication goes away with a known-good ECM/PCM, replace the original ECM/PCM (see page 11-284). ■

NO—Go to step 67.

67. Turn the ignition switch OFF.

68. Disconnect the fuel tank pressure (FTP) sensor 3P connector.

69. Turn the ignition switch ON (II).

70. Measure voltage between body ground and ECM/PCM connector terminal E5.

ECM/PCM CONNECTOR E (31P)

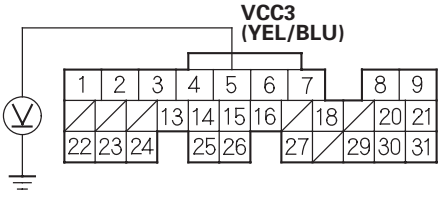

Wire side of female terminals

Is there about 5 V?

YES—Replace the FTP sensor (see page 11-473). ■

NO—Go to step 71.

71. Turn the ignition switch OFF.

72. Disconnect ECM/PCM connector E (31P).

73. Check for continuity between ECM/PCM connector terminal E5 and body ground.

ECM/PCM CONNECTOR E (31P)

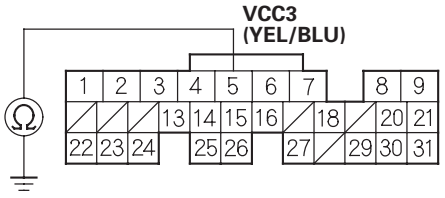

Wire side of female terminals

Is there continuity?

YES—Repair short in the wire between the ECM/PCM (E5) and the FTP sensor. ■

NO—Update the ECM/PCM if it does not have the latest software, or substitute a known-good ECM/PCM (see page 11-6), then recheck. If the symptom/indication goes away with a known-good ECM/PCM, replace the original ECM/PCM (see page 11-284). ■

74. Turn the ignition switch OFF.

75. Turn the ignition switch ON (II).

76. Measure voltage between ECM/PCM connector terminal E29 and body ground.

ECM/PCM CONNECTOR E (31P)

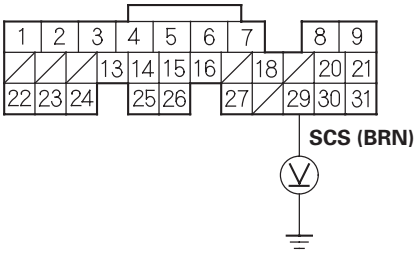

Wire side of female terminals

Is there about 5 V (or battery voltage)?

YES—Go to step 80.

NO—Go to step 77.

77. Turn the ignition switch OFF.

78. Disconnect ECM/PCM connector E (31P).

79. Check for continuity between ECM/PCM connector terminal E29 and body ground.

ECM/PCM CONNECTOR E (31P)

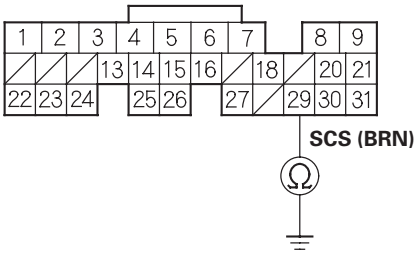

Wire side of female terminals

Is there continuity?

YES—Repair short in the wire between the DLC and the ECM/PCM (E29). ■

NO—Update the ECM/PCM if it does not have the latest software, or substitute a known-good ECM/PCM (see page 11-6), then recheck. If the symptom/indication goes away with a known-good ECM/PCM, replace the original ECM/PCM (see page 11-284). ■

80. Turn the ignition switch OFF.

81. Disconnect ECM/PCM connector E (31P).

82. Turn the ignition switch ON (II).

Is the MIL on?

YES—Repair short in the wire between the gauge assembly and the ECM/PCM (E31). If the wires are OK, replace the gauge assembly. ■

NO—Update the ECM/PCM if it does not have the latest software, or substitute a known-good ECM/PCM (see page 11-6), then recheck. If the symptom/indication goes away with a known-good ECM/PCM, replace the original ECM/PCM (see page 11-284). ■

MIL Circuit Troubleshooting (cont'd)

2005-2006 models

1. Turn the ignition switch ON (II), and watch the MIL.

   Does the MIL stay off?

   YES—Go to step 16.

   NO—Go to step 2.

2. Turn the ignition switch OFF.

3. Turn the ignition switch ON (II), and watch the MIL.

   Does the MIL stay on for more than 20 seconds or flash more than five times?

   YES—Go to step 4.

   NO—The MIL circuit is OK. ■

4. Turn the ignition switch OFF.

5. Connect the HDS (see page 11-3).

6. Turn the ignition switch ON (II), and read the HDS.

   Does the HDS communicate with the ECM/PCM?

   YES—Go to step 7.

   NO—Go to "DLC Circuit Troubleshooting" (see page 11-275). ■

7. Check for Temporary DTCs or DTCs with the HDS.

   Are any Temporary DTCs or DTCs indicated?

   YES—Go to the indicated DTC's Troubleshooting. ■

   NO—Go to step 8.

8. Check the MIL in the DATA LIST with the HDS.

   Is ON indicated?

   YES—Go to step 9.

   NO—Substitute a known-good gauge assembly, and recheck. If the MIL circuit is OK, replace the original gauge assembly. ■

9. Check the SCS in the DATA LIST with the HDS.

   Is a short indicated?

   YES—Go to step 10.

   NO—Update the ECM/PCM if it does not have the latest software, or substitute a known-good ECM/PCM (see page 11-6), then recheck. If the symptom/indication goes away with a known-good ECM/PCM, replace the original ECM/PCM (see page 11-284). ■

10. Turn the ignition switch OFF.

11. Jump the SCS line with the HDS.

12. Disconnect ECM/PCM connector E (31P) and the HDS.

13. Check for continuity between ECM/PCM connector terminal E29 and body ground.

ECM/PCM CONNECTOR E (31P)

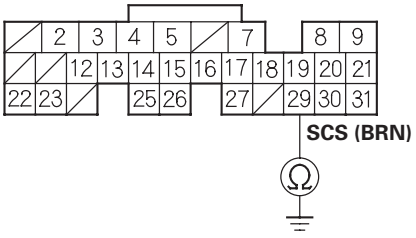

Wire side of female terminals

Is there continuity?

YES—Repair short in the wire between the ECM/PCM (E29) and the DLC. ■

NO—Go to step 14.

14. Disconnect the gauge assembly B (20P) connector.

15. Check for continuity between ECM/PCM connector terminal E31 and body ground.

ECM/PCM CONNECTOR E (31P)

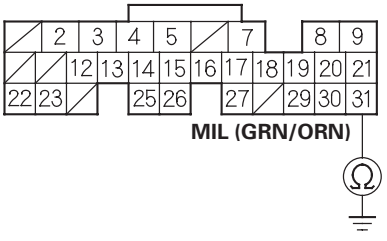

Wire side of female terminals

Is there continuity?

YES—Repair short in the wire between the ECM/PCM (E31) and the gauge assembly. ■

NO—Update the ECM/PCM if it does not have the latest software, or substitute a known-good ECM/PCM (see page 11-6), then recheck. If the symptom/indication goes away with a known-good ECM/PCM, replace the original ECM/PCM (see page 11-284). ■

16. Try to start the engine.

Does the engine start?

YES—Go to step 17.

NO—Go to step 25.

17. Turn the ignition switch OFF.

18. Connect ECM/PCM connector terminal E31 to body ground with a jumper wire.

ECM/PCM CONNECTOR E (31P)

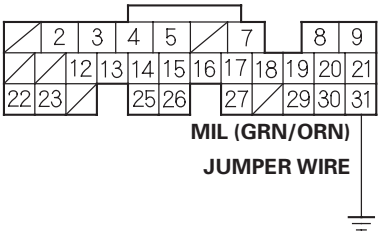

Wire side of female terminals

19. Turn the ignition switch ON (II).

Is the MIL on?

YES—Go to step 22.

NO—Go to step 20.

20. Turn the ignition switch OFF.

21. Inspect the No. 10 METER (7.5 A) fuse in the under-dash fuse/relay box.

Is the fuse OK?

YES—Check for an open in the wire between the ECM/PCM (E31) and the gauge assembly. Also check for a blown MIL bulb. If the wires and the bulb are OK, replace the gauge assembly. ■

NO—Repair short in the wire between No. 10 METER (7.5 A) fuse and the gauge assembly. Also replace the No. 10 METER (7.5 A) fuse. ■

(cont'd)

MIL Circuit Troubleshooting (cont'd)

22. Turn the ignition switch OFF.

23. Connect the HDS (see page 11-3).

24. Turn the ignition switch ON (II), and read the HDS.

    Does the HDS communicate with the ECM/PCM?

    YES—Update the ECM/PCM if it does not have the latest software, or substitute a known-good ECM/PCM (see page 11-6), then recheck. If the symptom/indication goes away with a known-good ECM/PCM, replace the original ECM/PCM (see page 11-284).■

    NO—Go the ''DLC Circuit Troubleshooting'' (see page 11-275).■

25. Turn the ignition switch OFF.

26. Inspect the No. 20 IG (USA: 40 A, Canada: 50 A) fuse in the under-hood fuse/relay box.

    Is the fuse OK?

    YES—Repair open in the wire between the No. 20 IG (USA: 40 A, Canada: 50 A) fuse and the ignition switch. If the wires are OK, go to step 27.

    NO—Repair short in the wire between No. 20 IG (USA: 40 A, Canada: 50 A) fuse and the under-hood fuse/relay box. Also replace the No. 20 IG (USA: 40 A, Canada: 50 A) fuse.■

27. Turn the ignition switch OFF.

28. Inspect the No. 6 ECU (ECM/PCM) (20 A) fuse in the under-hood fuse/relay box.

    Is the fuse OK?

    YES—Go to step 35.

    NO—Go to step 29.

29. Remove the blown No. 6 ECU (ECM/PCM) (20 A) fuse in the under-hood fuse/relay box.

30. Remove the glove box (see page 20-67). Remove PGM-FI main relay 1 (FI MAIN) (A).

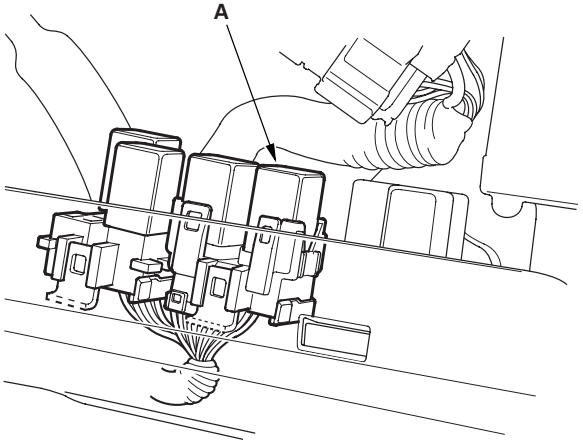

31. Check for continuity between body ground and PGM-FI main relay 1 (FI MAIN) 4P connector terminals No. 2 and No. 4 individually.

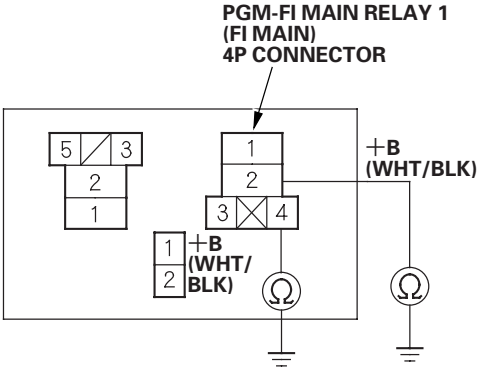

Wire side of female terminals

Is there continuity?

YES—Repair short in the wire between the No. 6 ECU (ECM/PCM) (20 A) fuse and PGM-FI main relay 1 (FI MAIN). Also replace the No. 6 ECU (ECM/PCM) (20 A) fuse. ■

NO—Go to step 32.

32. Disconnect each of the components or the connectors below, one at a time, and check for continuity between the PGM-FI main relay 1 (FI MAIN) 4P connector terminal No. 1 and body ground.

- PGM-FI main relay 2 (FUEL PUMP)
- ECM/PCM connector A (31P)
- Each injector 2P connector
- Idle air control valve 3P connector
- Camshaft position (CMP) sensor B 3P connector
- Crankshaft position (CKP) sensor 3P connector

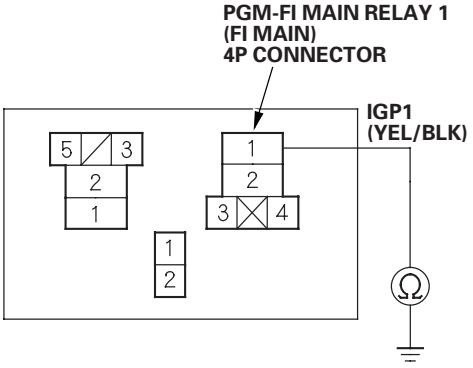

Wire side of female terminals

Is there continuity?

YES—Go to step 33.

NO—Replace the part that made continuity to body ground go away when disconnected. If the item is the ECM/PCM, update the ECM/PCM if it does not have the latest software, or substitute a known-good ECM/PCM (see page 11-6), then recheck. If the symptom/indication goes away with a known-good ECM/PCM, replace the original ECM/PCM (see page 11-284).
Also replace the No. 6 ECU (ECM/PCM) (20 A) fuse.

(cont'd)

MIL Circuit Troubleshooting (cont'd)

33. Disconnect the connectors of all these components:

    - PGM-FI main relay 2 (FUEL PUMP)
    - ECM/PCM connector A (31P)
    - Injectors
    - Idle air control valve
    - Camshaft position (CMP) sensor B
    - Crankshaft position (CKP) sensor

34. Check for continuity between PGM-FI main relay 1 (FI MAIN) 4P connector terminal No. 1 and body ground.

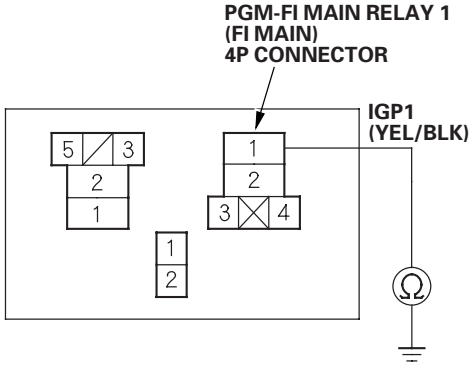

Wire side of female terminals

Is there continuity?

YES—Repair short in the wire between PGM-FI main relay 1 (FI MAIN) and each item. Also replace the No. 6 ECU (ECM/PCM) (20 A) fuse. ■

NO—Replace PGM-FI main relay 1 (FI MAIN). Also replace the No. 6 ECU (ECM/PCM) (20 A) fuse. ■

35. Inspect the No. 17 FUEL PUMP (15 A) fuse in the under-dash fuse/relay box.

    Is the fuse OK?

    YES—Go to step 48.

    NO—Go to step 36.

36. Remove the blown No. 17 FUEL PUMP (15 A) fuse in the under-dash fuse/relay box.

37. Jump the SCS line with the HDS.

38. Disconnect ECM/PCM connector E (31P).

39. Check for continuity between ECM connector terminal E9 and body ground.

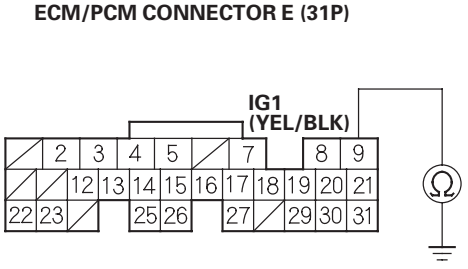

Wire side of female terminals

Is there continuity?

YES—Go to step 40.

NO—Replace the No. 17 FUEL PUMP (15 A) fuse, and update the ECM/PCM if it does not have the latest software, or substitute a known-good ECM/PCM (see page 11-6), then recheck. If the symptom/indication goes away with a known-good ECM/PCM, replace the original ECM/PCM (see page 11-284). ■

40. Remove the glove box (see page 20-67), then remove PGM-FI main relay 2 (FUEL PUMP) (A).

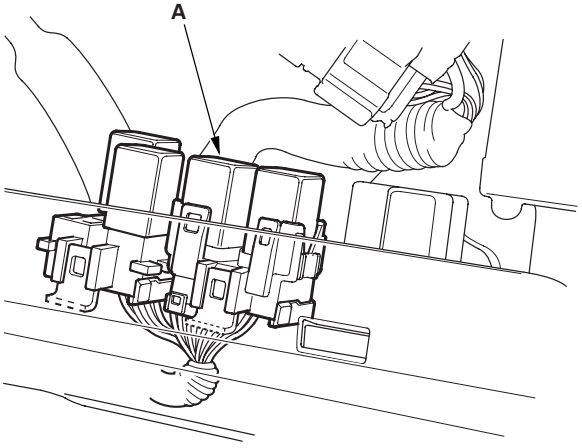

41. Check for continuity between ECM/PCM connector terminal E9 and body ground.

ECM/PCM CONNECTOR E (31P)

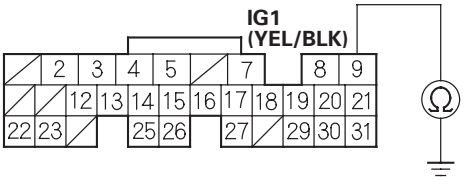

Wire side of female terminals

Is there continuity?

YES—Repair short in the wire between the No. 17 FUEL PUMP (15 A) fuse and the ECM/PCM (E9), or PGM-FI main relay 2 (FUEL PUMP). Also replace the No. 17 FUEL PUMP (15 A) fuse.■

NO—Go to step 42.

42. Remove the rear seat cushion (see page 20-85).

43. Remove the access panel from the floor.

44. Disconnect the fuel pump 5P connector.

45. Check for continuity between fuel pump 5P connector terminal No. 5 and body ground.

FUEL PUMP 5P CONNECTOR

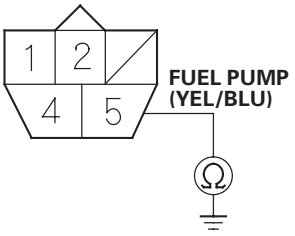

Wire side of female terminals

Is there continuity?

YES—Repair short in the wire between the fuel pump and PGM-FI main relay 2 (FUEL PUMP). Also replace the No. 17 FUEL PUMP (15 A) fuse.■

NO—Go to step 46.

46. Reinstall PGM-FI main relay 2 (FUEL PUMP) (A).

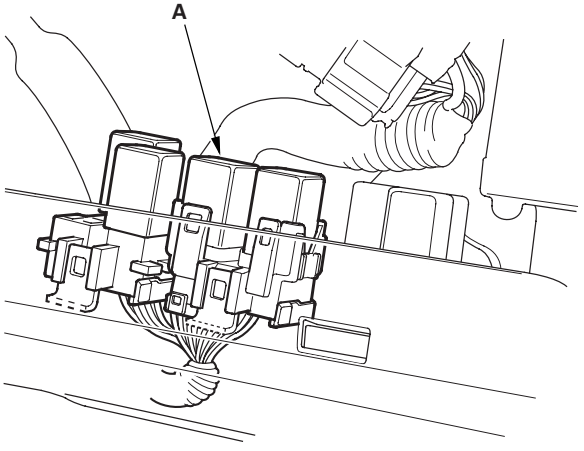

(cont'd)

MIL Circuit Troubleshooting (cont'd)

47. Check for continuity between fuel pump 5P connector terminal No. 5 and body ground.

FUEL PUMP 5P CONNECTOR

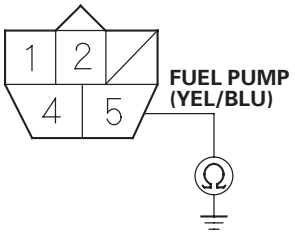

Wire side of female terminals

Is there continuity?

YES—Replace PGM-FI main relay 2 (FUEL PUMP). Also replace the No. 17 FUEL PUMP (15 A) fuse. ■

NO—Check the fuel pump, and replace it if necessary. Also replace the No. 17 FUEL PUMP (15 A) fuse. ■

48. Jump the SCS line with the HDS.

49. Disconnect ECM/PCM connector E (31P).

50. Turn the ignition switch ON (II).

51. Measure voltage between ECM/PCM connector terminals E9 and body ground.

ECM/PCM CONNECTOR E (31P)

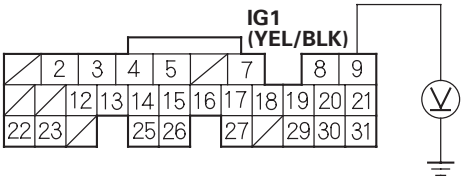

Wire side of female terminals

Is there battery voltage?

YES—Go to step 52.

NO—Repair open in the wire between the No. 17 FUEL PUMP (15 A) fuse and the ECM/PCM (E9). ■

52. Turn the ignition switch OFF.

53. Measure voltage between ECM/PCM connector terminal E7 and body ground.

ECM/PCM CONNECTOR E (31P)

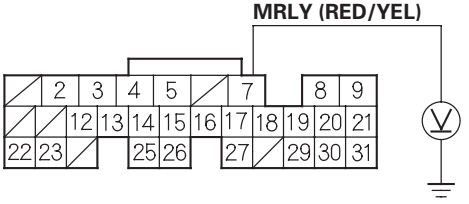

Wire side of female terminals

Is there battery voltage?

YES—Go to step 57.

NO—Go to step 54.

54. Remove the glove box (see page 20-67), then remove PGM-FI main relay 1 (FI MAIN) (A).

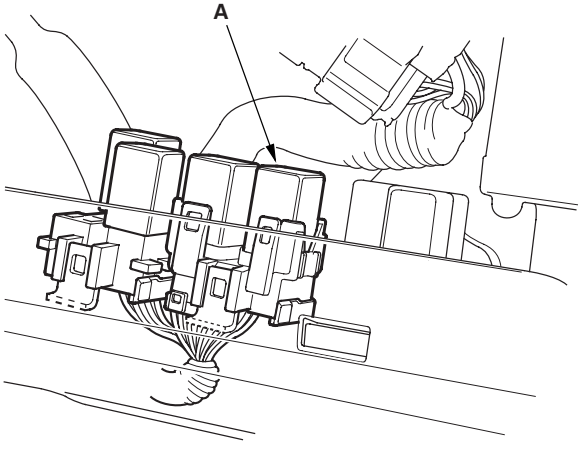

55. Measure voltage between PGM-FI main relay 1 (FI MAIN) 4P connector terminal No. 4 and body ground.

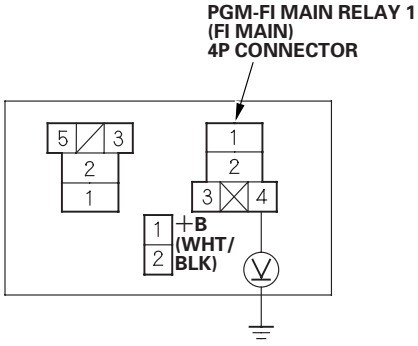

Wire side of female terminals

Is there battery voltage?

YES—Go to step 56.

NO—Repair open in the wire between the No. 6 ECU (ECM/PCM) (20 A) fuse and PGM-FI main relay 1 (FI MAIN).■

56. Check for continuity between PGM-FI main relay 1 (FI MAIN) 4P connector terminal No. 3 and ECM/PCM connector terminal E7.

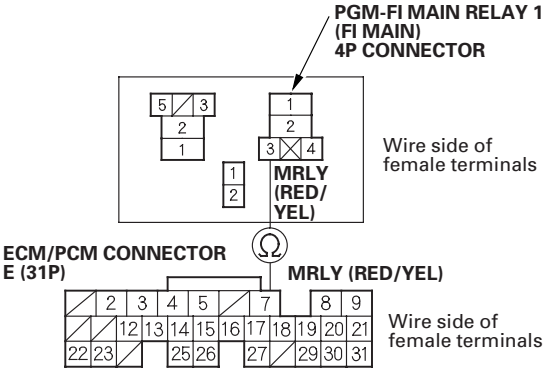

Is there continuity?

YES—Test PGM-FI main relay 1 (FI MAIN) (see page 22-62). If the relay is OK, update the ECM/PCM if it does not have the latest software, or substitute a known-good ECM/PCM (see page 11-6), then recheck. If the symptom/indication goes away with a known-good ECM/PCM, replace the original ECM/PCM (see page 11-284).■

NO—Repair open in the wire between PGM-FI main relay 1 (FI MAIN) and the ECM/PCM (E7).■

57. Reconnect ECM/PCM connector E (31P).

58. Turn the ignition switch ON (II).

59. Measure voltage between body ground and ECM/PCM connector terminals A2 and A3 individually.

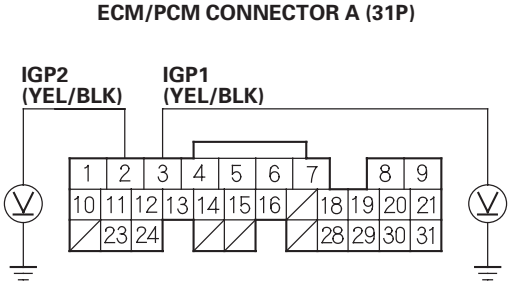

Wire side of female terminals

Is there battery voltage?

YES—Go to step 66.

NO—Go to step 60.

60. Turn the ignition switch OFF.

61. Remove the glove box (see page 20-67), then remove PGM-FI main relay 1 (FI MAIN) (A).

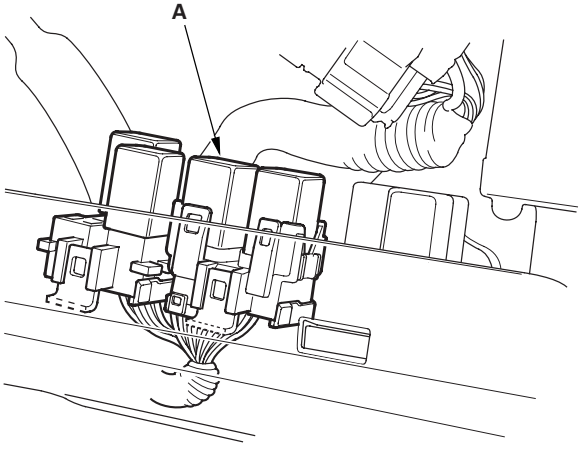

(cont'd)

MIL Circuit Troubleshooting (cont'd)

62. Turn the ignition switch ON (II).

63. Measure voltage between PGM-FI main relay 1 (FI MAIN) 4P connector terminal No. 2 and body ground.

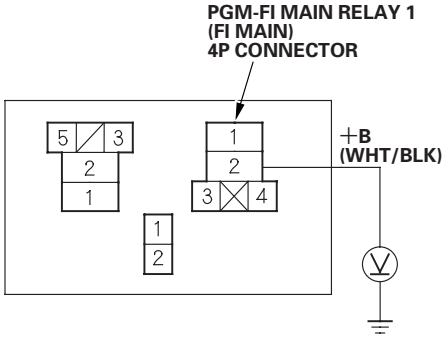

Wire side of female terminals

Is there battery voltage?

YES—Go to step 64.

NO—Repair open in the wire between the No. 6 ECU (ECM/PCM) (20 A) fuse and PGM-FI main relay 1 (FI MAIN).■

64. Turn the ignition switch OFF.

65. Check for continuity between PGM-FI main relay 1 (FI MAIN) 4P connector terminal No. 1 and ECM/PCM connector terminals A2 and A3 individually.

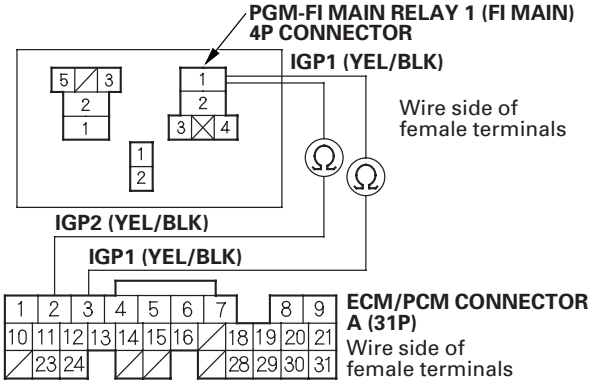

Is there continuity?

YES—Replace PGM-FI main relay 1 (FI MAIN).■

NO—Repair open in the wire between PGM-FI main relay 1 (FI MAIN) and the ECM/PCM (A2, A3).■

66. Measure voltage between body ground and ECM/PCM connector terminals A4, A5, A8 and A9 individually.

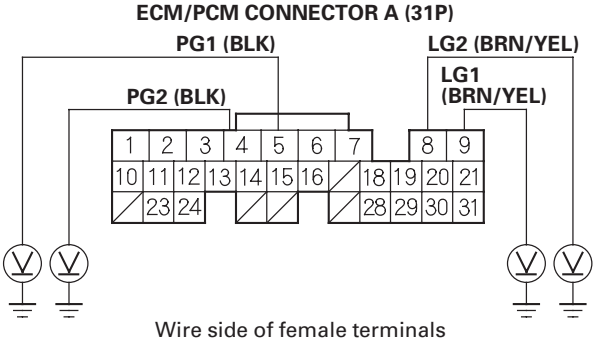

Wire side of female terminals

Is there less than 1.0 V?

YES—Repair open in the wire(s) between that had more than 1.0 V between G101 and the ECM/PCM (A4, A5, A8, A9).■

NO—Go to step 67.

67. Turn the ignition switch ON (II).

68. Measure voltage between body ground and ECM/PCM connector terminal A21.

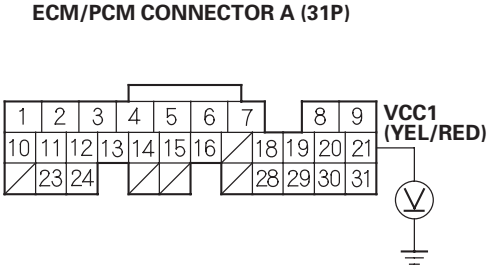

Wire side of female terminals

Is there about 5 V?

YES—Go to step 75.

NO—Go to step 69.

69. Disconnect the connector from each of these sensors, one at a time, and measure voltage between body ground and ECM/PCM connector terminal A21 with the ignition switch ON (II).

- Manifold absolute pressure (MAP) sensor
- Intake manifold tuning (IMT) (intake manifold runner control (IMRC)) valve
- Output shaft (countershaft) speed sensor

ECM/PCM CONNECTOR A (31P)

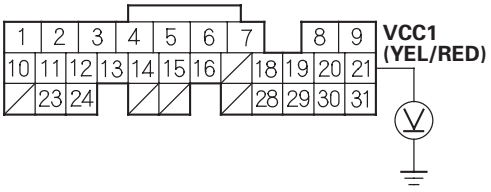

Wire side of female terminals

Is there about 5 V?

YES—Replace the sensor that restored 5 V when disconnected. ■

NO—Go to step 70.

70. Turn the ignition switch OFF.

71. Jump the SCS line with the HDS.

72. Disconnect the connectors from the these sensors:

- Manifold absolute pressure (MAP) sensor
- Intake manifold tuning (IMT) (intake manifold runner control (IMRC)) valve
- Output shaft (countershaft) speed sensor

73. Disconnect ECM/PCM connector A (31P).

74. Check for continuity between ECM/PCM connector terminal A21 and body ground.

ECM/PCM CONNECTOR A (31P)

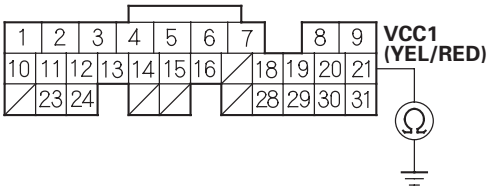

Wire side of female terminals

Is there continuity?

YES—Repair short in the wire between the ECM/PCM (A21) and the MAP sensor, IMT (IMRC) valve or the output shaft (countershaft) speed sensor. ■

NO—Update the ECM/PCM if it does not have the latest software, or substitute a known-good ECM/PCM (see page 11-6), then recheck. If the symptom/indication goes away with a known-good ECM/PCM, replace the original ECM/PCM (see page 11-284). ■

(cont'd)

MIL Circuit Troubleshooting (cont'd)

75. Measure voltage between body ground and ECM/PCM connector terminal A20.

ECM/PCM CONNECTOR A (31P)

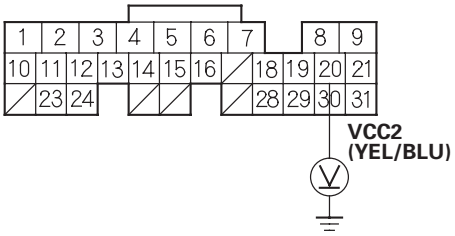

Wire side of female terminals

Is there about 5 V?

YES—Go to step 83.

NO—Go to step 76.

76. Turn the ignition switch OFF.

77. Disconnect the connector from each of these sensors, one at a time, and measure voltage between body ground and ECM/PCM connector terminal A20 with the ignition switch ON (II).

- Throttle position (TP) sensor
- Input shaft (mainshaft) speed sensor

ECM/PCM CONNECTOR A (31P)

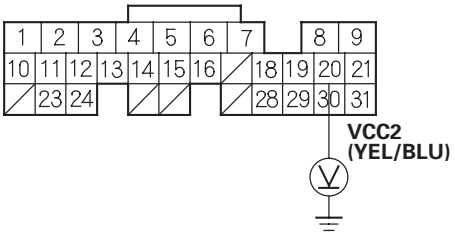

Wire side of female terminals

Is there about 5 V?

YES—Replace the sensor that restored 5 V when disconnected. ■

NO—Go to step 78.

78. Turn the ignition switch OFF.

79. Jump the SCS line with the HDS.

80. Disconnect the connector from these sensors:

- Throttle position (TP) sensor
- Input shaft (mainshaft) speed sensor

81. Disconnect ECM/PCM connector A (31P).

82. Check for continuity between ECM/PCM connector terminal A20 and body ground.

ECM/PCM CONNECTOR A (31P)

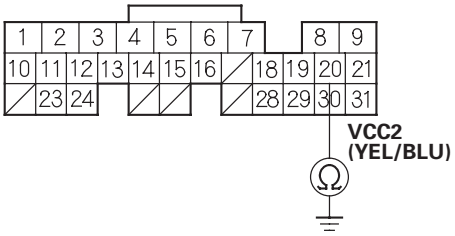

Wire side of female terminals

Is there continuity?

YES—Repair short in the wire between the ECM/PCM (A20) and the TP sensor, or input shaft (mainshaft) speed sensor. ■

NO—Update the ECM/PCM if it does not have the latest software, or substitute a known-good ECM/PCM (see page 11-6), then recheck. If the symptom/indication goes away with a known-good ECM/PCM, replace the original ECM/PCM (see page 11-284). ■

83. Measure voltage between body ground and ECM/PCM connector terminal E5.

ECM/PCM CONNECTOR E (31P)

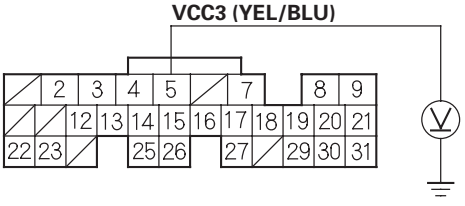

Wire side of female terminals

Is there about 5 V?

YES—Update the ECM/PCM if it does not have the latest software, or substitute a known-good ECM/PCM (see page 11-6), then recheck. If the symptom/indication goes away with a known-good ECM/PCM, replace the original ECM/PCM (see page 11-284). ■

NO—Go to step 84.

84. Turn the ignition switch OFF.

85. Disconnect the FTP sensor 3P connector, and measure voltage between body ground and ECM/PCM connector terminal E5 with the ignition switch ON (II).

ECM/PCM CONNECTOR E (31P)

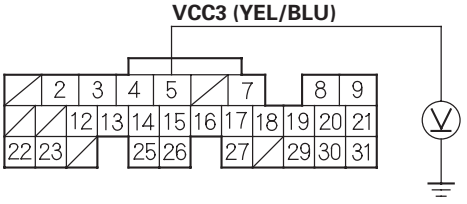

Wire side of female terminals

Is there about 5 V?

YES—Replace the FTP sensor (see page 11-473). ■

NO—Go to step 86.

86. Turn the ignition switch OFF.

87. Jump the SCS line with the HDS.

88. Disconnect the FTP sensor 3P connector.

89. Disconnect ECM/PCM connector E (31P).

(cont'd)

MIL Circuit Troubleshooting (cont'd)

90. Check for continuity between ECM/PCM connector terminal E5 and body ground.

ECM/PCM CONNECTOR E (31P)

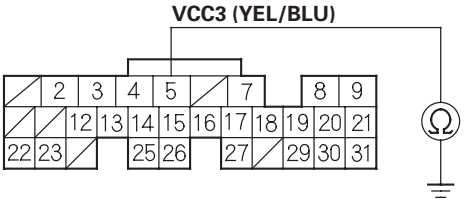

Wire side of female terminals

Is there continuity?

YES—Repair short in the wire between the ECM/PCM (E5) and the FTP sensor. ■

NO—Update the ECM/PCM if it does not have the latest software, or substitute a known-good ECM/PCM (see page 11-6), then recheck. If the symptom/indication goes away with a known-good ECM/PCM, replace the original ECM/PCM (see page 11-284). ■

DLC Circuit Troubleshooting

2002-2004 models

If the ECM/PCM does not communicate with a scan tool, HDS, or I/M test equipment, do this troubleshooting procedure.

1. Measure voltage between DLC terminal No. 16 and body ground.

DATA LINK CONNECTOR (DLC)

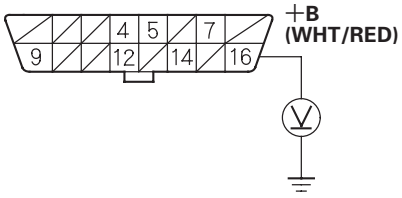

Terminal side of female terminals

Is there battery voltage?

YES—Go to step 2.

NO—Repair open in the wire between DLC terminal No. 16 and the No. 9 BACK UP (7.5 A) fuse in the under-hood fuse/relay box.■

2. Measure voltage between DLC terminals No. 4 and No. 16.

DATA LINK CONNECTOR (DLC)

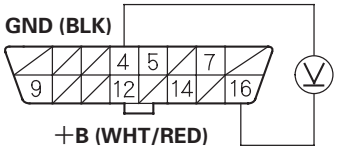

Terminal side of female terminals

Is there battery voltage?

YES—Go to step 3.

NO—Repair open in the wire between DLC terminal No. 4 and body ground (G401).■

3. Measure voltage between DLC terminals No. 5 and No. 16.

DATA LINK CONNECTOR (DLC)

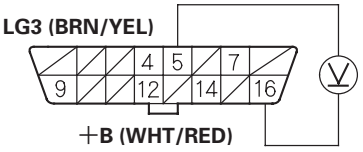

Terminal side of female terminals

Is there battery voltage?

YES—Go to step 4.

NO—Repair open in the wire between DLC terminal No. 5 and ECM/PCM (E3) or ECM/PCM (A23, A24) and body ground.■

4. Turn the ignition switch ON (II).

5. Measure voltage between DLC terminals No. 5 and No. 7.

DATA LINK CONNECTOR (DLC)

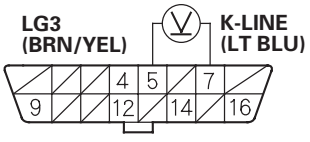

Terminal side of female terminals

Is there 8.5 V or more?

YES—Go to step 10.

NO—Go to step 6.

6. Turn the ignition switch OFF.

(cont'd)

DLC Circuit Troubleshooting (cont'd)

7. Disconnect ECM/PCM connector E (31P). Make sure a scan tool or the HDS is disconnected from the DLC.

8. Check for continuity between DLC terminal No. 7 and body ground.

DATA LINK CONNECTOR (DLC)

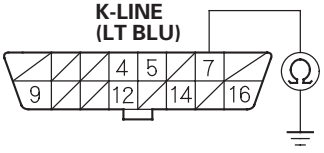

Terminal side of female terminals

Is there continuity?

YES—Repair short to ground in the wire between DLC terminal No. 7 and the ECM/PCM (E23). After repairing the wire, check for a DTC with a scan tool or the HDS, and go to the indicated DTC's troubleshooting.■

NO—Go to step 9.

9. Check for continuity between DLC terminal No. 7 and ECM/PCM terminal E23.

ECM/PCM CONNECTOR E (31P)

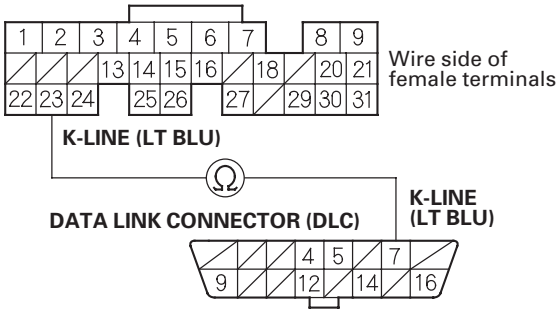

Terminal side of female terminals

Is there continuity?

YES—Update the ECM/PCM if it does not have the latest software, or substitute a known-good ECM/PCM (see page 11-6), then recheck. If the symptom/indication goes away with a known-good ECM/PCM, replace the original ECM/PCM (see page 11-284).■

NO—Repair open in the wire between DLC terminal No. 7 and the ECM/PCM (E23). After repairing the wire, check for a DTC with a scan tool or the HDS, and go to the indicated DTC's troubleshooting.■

10. Turn the ignition switch OFF.

11. Disconnect ECM/PCM connector E (31P). Make sure a scan tool or the HDS is disconnected from the DLC.

12. Turn the ignition switch ON (II).

13. Measure voltage between DLC terminals No. 5 and No. 7.

DATA LINK CONNECTOR (DLC)

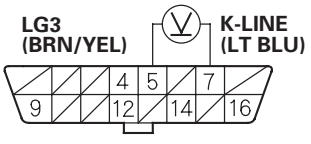

Terminal side of female terminals

Is there 0 V?

YES—Update the ECM/PCM if it does not have the latest software, or substitute a known-good ECM/PCM (see page 11-6), then recheck. If the symptom/indication goes away with a known-good ECM/PCM, replace the original ECM/PCM (see page 11-284).■

NO—Repair short to power in the wire between the DLC terminal No. 7 and the ECM/PCM (E23). After repairing the wire, check for a DTC with a scan tool or the HDS, and go to the indicated DTC's troubleshooting.■

2005-2006 models

NOTE:
- If the ECM/PCM does not communicate with the HDS, do this troubleshooting procedure.
- Check that the MIL circuit is normal, then do this troubleshooting.

1. Measure voltage between DLC terminal No. 16 and body ground.

DATA LINK CONNECTOR (DLC)

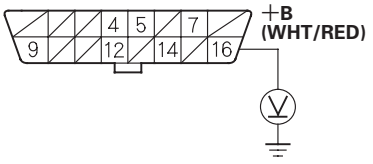

Terminal side of female terminals

Is there battery voltage?

YES—Go to step 2.

NO—Repair open in the wire between DLC terminal No. 16 and the No. 9 BACK UP (7.5 A) fuse in the under-hood fuse/relay box.■

2. Measure voltage between DLC terminals No. 4 and No. 16.

DATA LINK CONNECTOR (DLC)

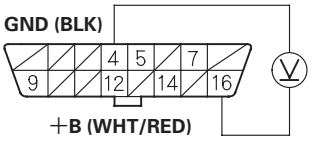

Terminal side of female terminals

Is there battery voltage?

YES—Go to step 3.

NO—Repair open in the wire between DLC terminal No. 4 and body ground (G401).■

3. Measure voltage between DLC terminals No. 5 and No. 16.

DATA LINK CONNECTOR (DLC)

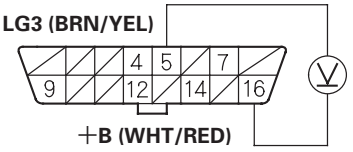

Terminal side of female terminals

Is there battery voltage?

YES—Go to step 4.

NO—Repair open in the wire between the ECM/PCM (E3) and DLC terminal No. 5.■

4. Turn the ignition switch ON (II).

5. Measure voltage between DLC terminals No. 5 and No. 7.

DATA LINK CONNECTOR (DLC)

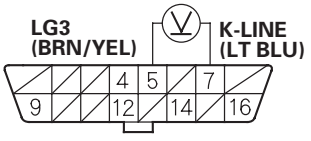

Terminal side of female terminals

Is there 8.5 V or more?

YES—Go to step 11.

NO—Go to step 6.

6. Turn the ignition switch OFF.

7. Jump the SCS line with the HDS.

(cont'd)

DLC Circuit Troubleshooting (cont'd)

8. Disconnect ECM/PCM connector E (31P).

9. Check for continuity between DLC terminal No. 7 and body ground.

DATA LINK CONNECTOR (DLC)

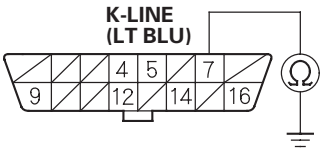

Terminal side of female terminals

Is there continuity?

YES—Repair short to ground in the wire between DLC terminal No. 7 and the ECM/PCM (E23). After repairing the wire, check for a DTC with the HDS, then go to the indicated DTC's troubleshooting. ■

NO—Go to step 10.

10. Check for continuity between DLC terminal No. 7 and ECM/PCM terminal E23.

ECM/PCM CONNECTOR E (31P)

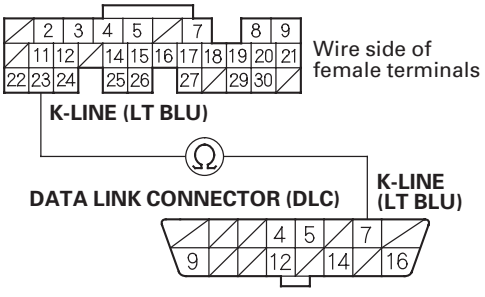

Terminal side of female terminals

Is there continuity?

YES—Update the ECM/PCM if it does not have the latest software, or substitute a known-good ECM/PCM (see page 11-6), then recheck. If the symptom/indication goes away with a known-good ECM/PCM, replace the original ECM/PCM (see page 11-284). ■

NO—Repair open in the wire between DLC terminal No. 7 and the ECM/PCM (E23). After repairing the wire, check for a DTC with the HDS, then go to the indicated DTC's troubleshooting. ■

11. Turn the ignition switch OFF.

12. Jump the SCS line with the HDS.

13. Disconnect ECM/PCM connector E (31P).

14. Turn the ignition switch ON (II).

15. Measure voltage between DLC terminals No. 5 and No. 7.

DATA LINK CONNECTOR (DLC)

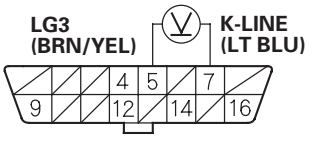

Terminal side of female terminals

Is there 0 V?

YES—Update the ECM/PCM if it does not have the latest software, or substitute a known-good ECM/PCM (see page 11-6), then recheck. If the symptom/indication goes away with a known-good ECM/PCM, replace the original ECM/PCM (see page 11-284). ■

NO—Repair short to power in the wire between DLC terminal No. 7 and the ECM/PCM (E23). After repairing the wire, check for a DTC with the HDS, then go to the indicated DTC's troubleshooting. ■

Injector Replacement

1. Relieve fuel pressure (see page 11-360).
2. Remove the engine cover.
3. Disconnect the connectors from the injectors (A), and remove the harness holder (B).

K20A2/K20Z1 engines

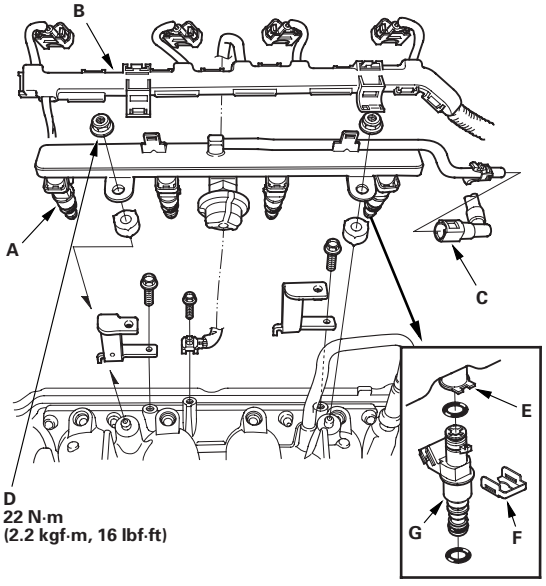

K20A3 engine—2002-2004 models

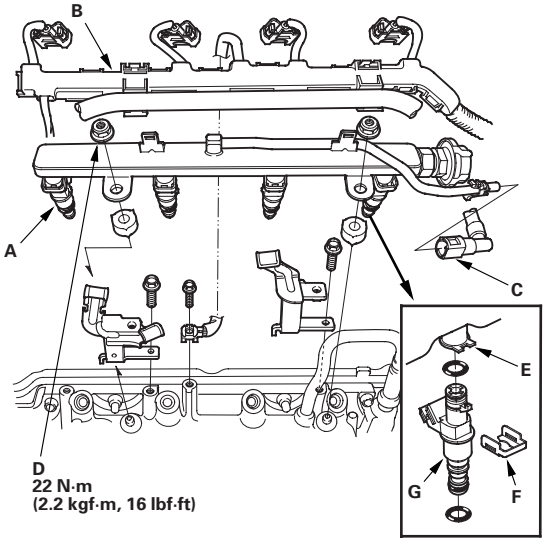

K20A3 engine—2005-2006 models

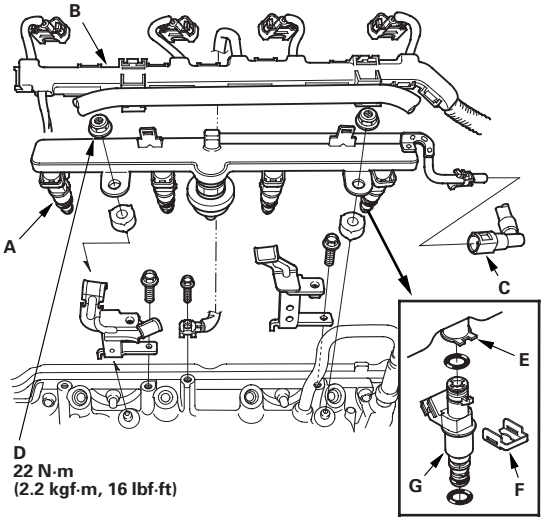

4. Disconnect the quick-connect fittings (C).
5. Remove the fuel rail mounting nuts (D) from the fuel rail (E).
6. Remove the injector clip (F) from the injector (G).
7. Remove the injector from the fuel rail.

(cont'd)

Injector Replacement (cont'd)

8. Coat the new O-rings (A) with clean engine oil, and insert the injectors (B) into the fuel rail (C).

K20A2/K20Z1 engines

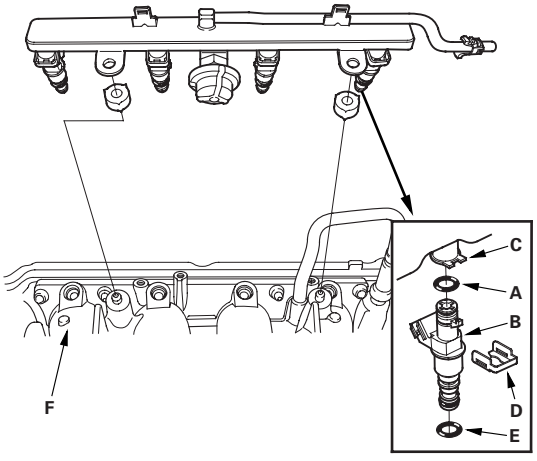

K20A3 engine—2002-2004 models

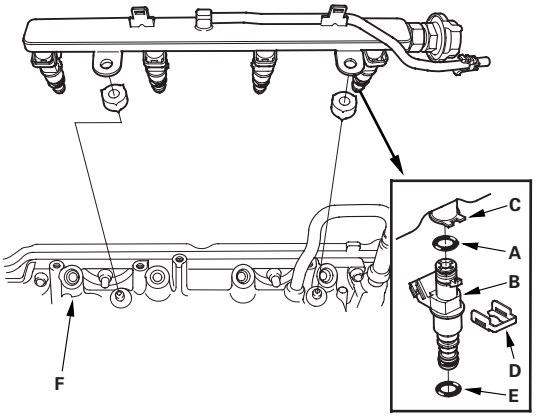

K20A3 engine—2005-2006 models

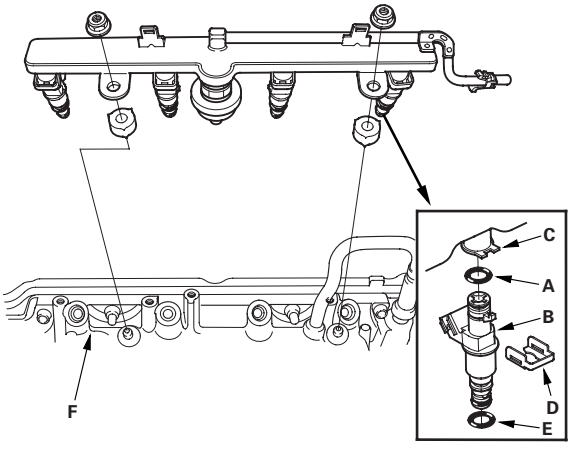

9. Install the injector clip (D).
10. Coat the injector O-ring (E) with clean engine oil.
11. To prevent damage to the O-ring, install the injectors in the fuel rail first, then install them in the injector base (F).
12. Install the fuel rail mounting nuts.
13. Connect the connectors on the injectors, and install the harness holder.
14. Connect the quick-connect fittings.
15. Turn the ignition switch ON (II), but do not operate the starter. After the fuel pump runs for approximately 2 seconds, the fuel pressure in the fuel line rises. Repeat this two or three times, then check for fuel leakage.
16. Install the engine cover.

A/F Sensor Replacement

Special Tools Required
O2 sensor wrench, Snap-on YA8875, SP Tools 93750, or equivalent, commercially available

1. Disconnect the A/F sensor 4P connector (A), then remove the A/F sensor (B).

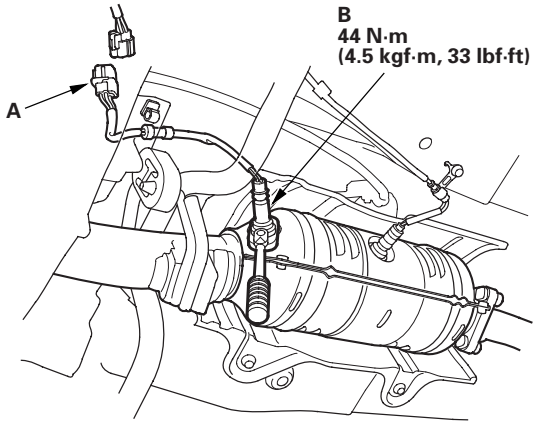

2. Install the A/F sensor in the reverse order of removal.

Secondary HO2S Replacement

Special Tools Required
O2 sensor wrench, Snap-on YA8875, SP Tools 93750, or equivalent, commercially available

1. Disconnect the secondary HO2S 4P connector (A), then remove the secondary HO2S (B).

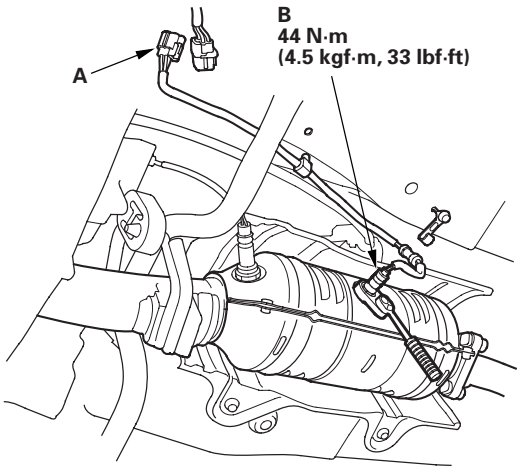

2. Install the secondary HO2S in the reverse order of removal.

CKP Sensor Replacement

1. Disconnect the CKP sensor 3P connector.
2. Remove the CKP sensor (A).

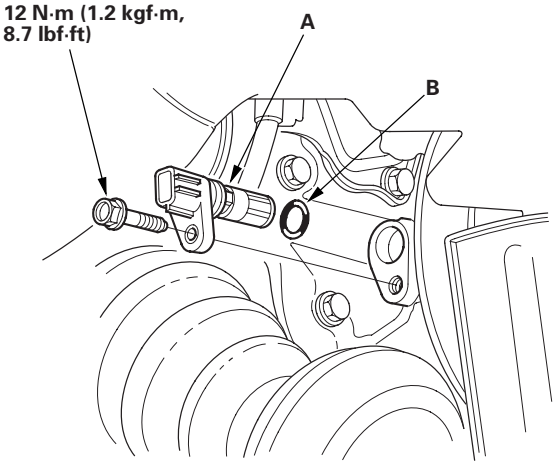

3. Install the sensor in the reverse order of removal with a new O-ring (B).
4. 2005-2006 models: Do the CKP pattern clear/pattern learn procedure (see page 11-5).

ECT Sensor Replacement

1. When the engine is cool, drain the coolant from the radiator (see page 10-6).
2. Remove the air cleaner (see page 11-407).
3. Disconnect the ECT sensor 2P connector.
4. Remove the ECT sensor (A).

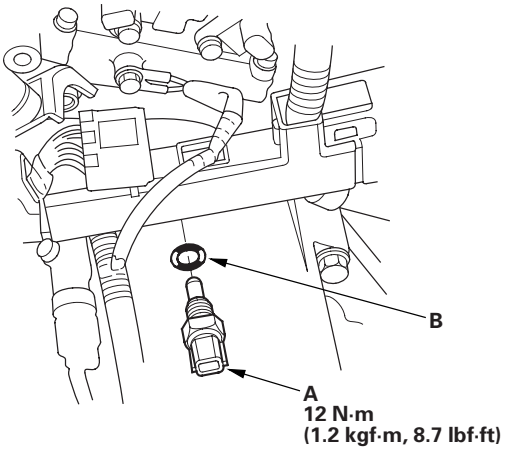

5. Install the sensor in the reverse order of removal with a new O-ring (B).
6. Refill the cooling system (see page 10-6).

CMP Sensor B Replacement

1. Remove the air cleaner (see page 11-407).
2. Disconnect the CMP sensor B 3P connector.
3. Remove CMP sensor B (A) from the exhaust camshaft side of the cylinder head.

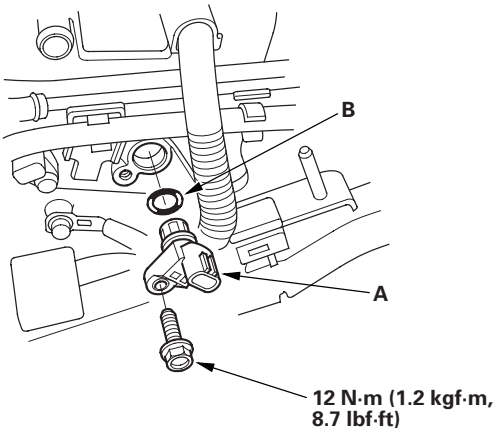

4. Install the sensor in the reverse order of removal with a new O-ring (B).

IAT Sensor Replacement

1. Disconnect the IAT sensor 2P connector.
2. Remove the clip (A) and the IAT sensor (B).

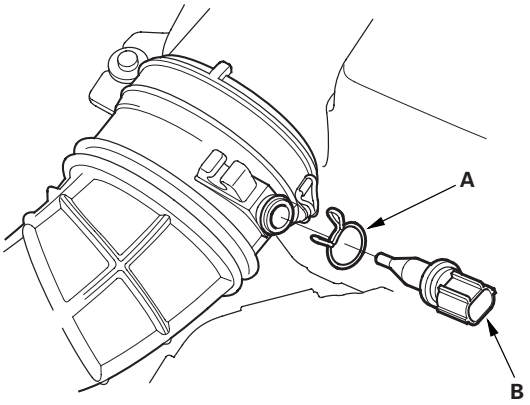

3. Install the sensor in the reverse order of removal.

Knock Sensor Replacement

K20A2/K20Z1 engines

1. Remove the intake manifold bracket (A).

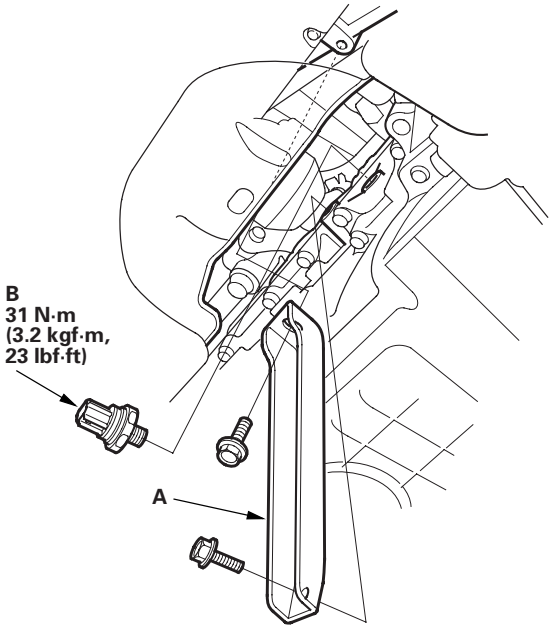

2. Disconnect the knock sensor 1P connector.
3. Remove the knock sensor (B).
4. Install the sensor in the reverse order of removal.

K20A3 engine

1. Remove the intake manifold (see page 9-2).
2. Disconnect the knock sensor 1P connector.
3. Remove the knock sensor (A).

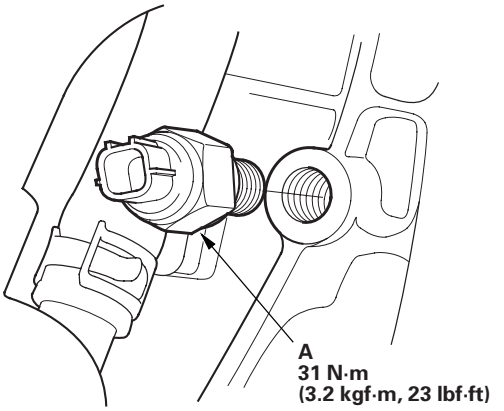

4. Install the sensor in the reverse order of removal.

Output Shaft (Countershaft) Speed Sensor Replacement

2005-2006 M/T models

1. Remove the air cleaner (see page 11-407).

2. Disconnect the output shaft (countershaft) speed sensor connector (A).

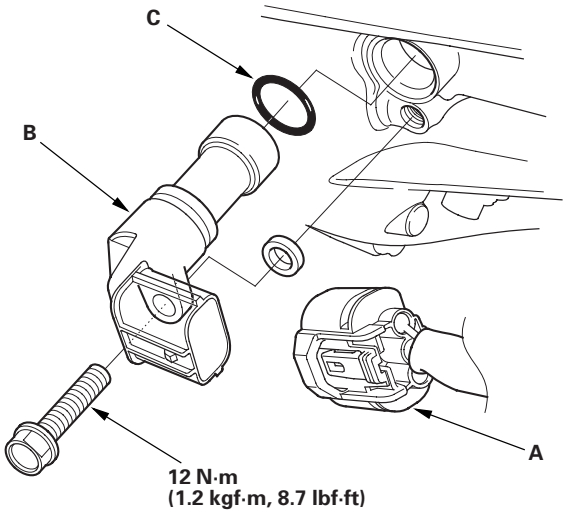

3. Remove the output shaft (countershaft) speed sensor (B).

4. Install the sensor in the reverse order of removal with a new O-ring (C).

ECM/PCM Replacement

2002-2004 models

1. Disconnect the negative cable from the battery.
2. Remove the passenger's dashboard lower cover (A) (see page 20-67).

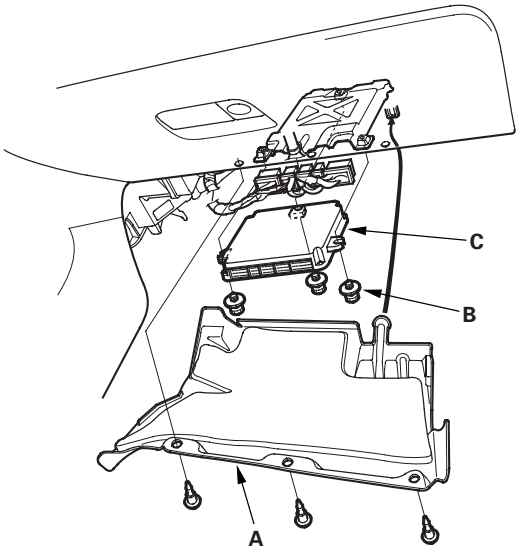

3. Remove the ECM/PCM mounting bolts (B) and the ECM/PCM (C).
4. Install the ECM/PCM in the reverse order of removal.
5. Reconnect the negative cable to the battery.
6. Do the ECM/PCM idle learn procedure (see page 11-349).

2005-2006 models

1. Jump the SCS line with the HDS.
2. Remove the passenger's dashboard lower cover (A) (see page 20-67).

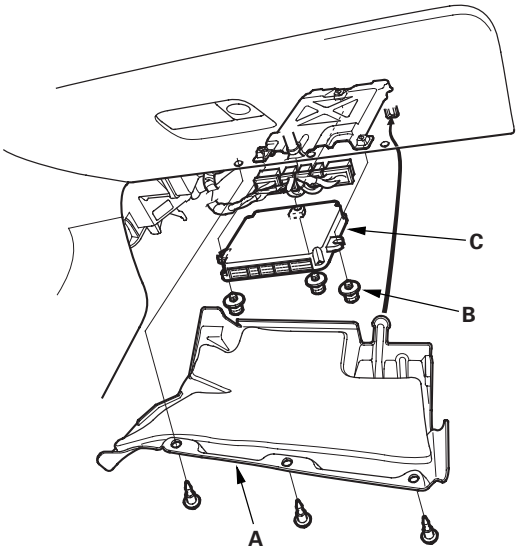

3. Remove the ECM/PCM mouting bolts (B) and the ECM/PCM (C).
4. Install the ECM/PCM in the reverse order of removal.
5. Open the SCS line with the HDS.
6. Turn the ignition switch ON (II).

   NOTE: DTC P0630 ''VIN Not Programmed or Mismatch'' may be stored because the VIN has not been programmed into the ECM/PCM; ignore it, and continue this procedure.

7. Input the VIN to the ECM/PCM with the HDS.
8. Rewrite the immobilizer code with the ECM/PCM replacement procedure in the HDS; it allows you to start the engine.
9. Reset the ECM/PCM with the HDS.
10. Do the ECM/PCM idle learn procedure (see page 11-349).
11. Do the CKP pattern learn procedure (see page 11-5).

Component Location Index

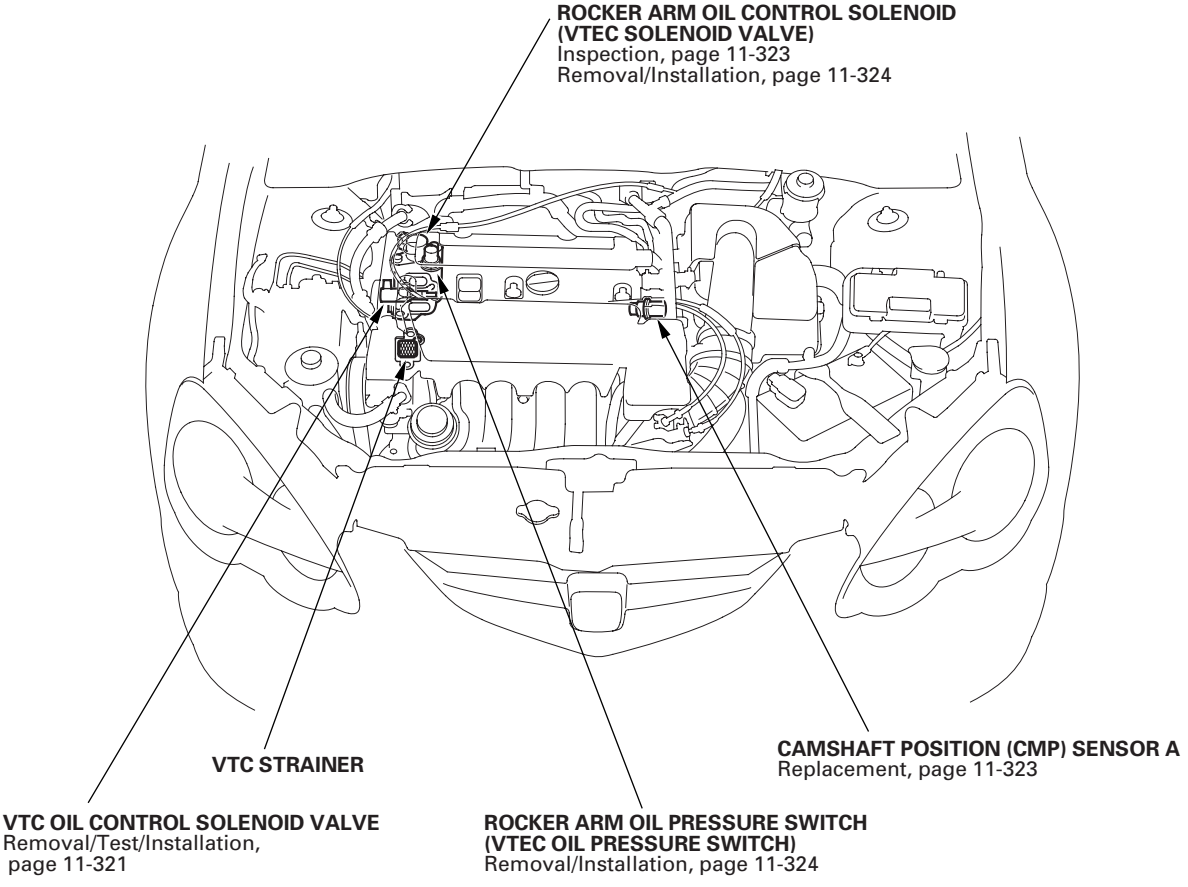

*: This illustration shows the 2002-2004 K20A3 engine model; the other models are similar.

DTC Troubleshooting

DTC P0010: VTC Oil Control Solenoid Valve Malfunction (2002-2004 models)

1. Reset the ECM/PCM (see page 11-4).

2. Start the engine. Hold the engine speed at 3,000 rpm without load (in Park or neutral) until the radiator fan comes on, then let it idle.

   Is DTC P0010 indicated?

   YES—Go to step 3.

   NO—Intermittent failure, system is OK at this time. Check for poor connections or loose terminals at the VTC oil control solenoid valve and the ECM/PCM. ■

3. Turn the ignition switch OFF.

4. Disconnect ECM/PCM connector B (24P).

5. Measure resistance between ECM/PCM connector terminals B1 and B23.

ECM/PCM CONNECTOR B (24P)

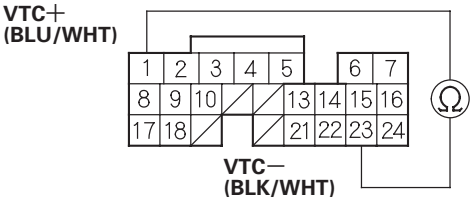

Wire side of female terminals

Is there 7.0— 10.2 Ω ?

YES—Go to step 10.

NO—Go to step 6.

6. Disconnect the VTC oil control solenoid valve 2P connector.

7. Measure resistance between VTC oil control solenoid valve 2P connector terminals No. 1 and No. 2.

VTC OIL CONTROL SOLENOID VALVE 2P CONNECTOR

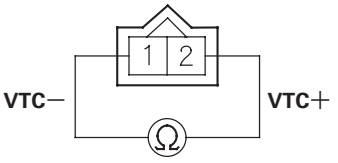

Terminal side of male terminals

Is there 7.0— 10.2 Ω ?

YES—Go to step 8.

NO—Replace the VTC oil control solenoid valve (see page 11-321). ■

8. Connect VTC oil control solenoid valve 2P connector terminals No. 1, No. 2 and body ground with a jumper wire individually.

VTC OIL CONTROL SOLENOID VALVE 2P CONNECTOR

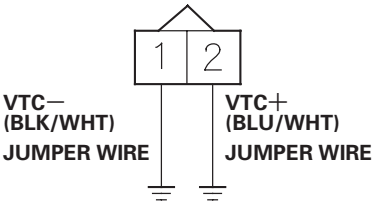

Wire side of female terminals

9. Check for continuity between ECM/PCM connector terminals B1, B23 and body ground.

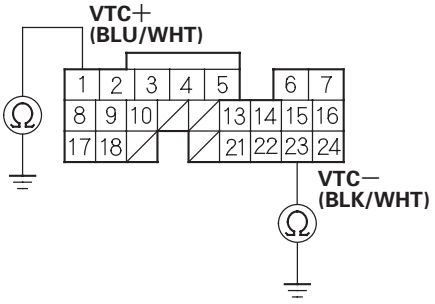

Wire side of female terminals

Is there continuity?

YES—Go to step 10.

NO—Repair open in the wire between the ECM/PCM (B1, B23) and the VTC oil control solenoid valve. ■

10. Check for continuity between ECM/PCM connector terminals B1 and B23 and body ground individually.

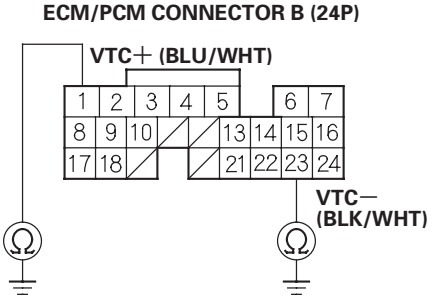

Wire side of female terminals

Is there continuity?

YES—Go to step 11.

NO—Update the ECM/PCM if it does not have the latest software, or substitute a known-good ECM/PCM (see page 11-6), then recheck. If the symptom/indication goes away with a known-good ECM/PCM, replace the original ECM/PCM (see page 11-284). ■

11. Disconnect the VTC oil control solenoid valve 2P connector.

12. Check for continuity between ECM/PCM connector terminals B1 and B23 and body ground individually.

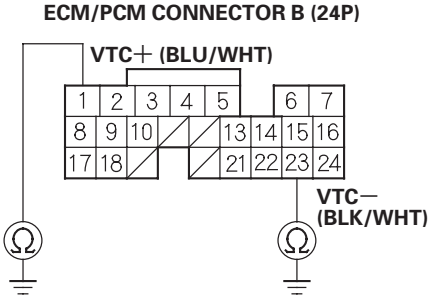

Wire side of female terminals

Is there continuity?

YES—Repair short in the wire between the ECM/PCM (B1, B23) and the VTC oil control solenoid valve. ■

NO—Replace the VTC oil control solenoid valve (see page 11-321). ■

DTC Troubleshooting (cont'd)

DTC P0010: VTC Oil Control Solenoid Valve Malfunction
(2005-2006 models)

1. Turn the ignition switch ON (II).
2. Clear the DTC with the HDS.
3. Start the engine. Hold the engine speed at 3,000 rpm without load (in Park or neutral) until the radiator fan comes on, then let it idle.
4. Do the VTC TEST in the INSPECTION MENU with the HDS.
5. Check for Temporary DTCs or DTCs with the HDS.

   Is DTC P0010 indicated?

   YES—Go to step 6.

   NO—Intermittent failure, system is OK at this time. Check for poor connections or loose terminals at the VTC oil control solenoid valve and the ECM/PCM. ■

6. Turn the ignition switch OFF.
7. Disconnect the VTC oil control solenoid valve 2P connector.
8. Measure resistance between VTC oil control solenoid valve 2P connector terminals No. 1 and No. 2.

VTC OIL CONTROL SOLENOID VALVE 2P CONNECTOR

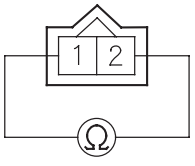

Terminal side of male terminals

Is there 6.75—8.25 Ω at room temperature?

YES—Go to step 9.

NO—Go to step 15.

9. Check for continuity between VTC oil control solenoid valve 2P connector terminal No. 1 and body ground.

VTC OIL CONTROL SOLENOID VALVE 2P CONNECTOR

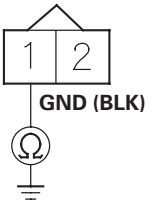

Wire side of female terminals

Is there continuity?

YES—Go to step 10.

NO—Repair open in the wire between the VTC oil control solenoid valve and G101, then go to step 16.

10. Jump the SCS line with the HDS.
11. Disconnect ECM/PCM connector B (24P).
12. Check for continuity between ECM/PCM connector terminal B1 and body ground.

ECM/PCM CONNECTOR B (24P)

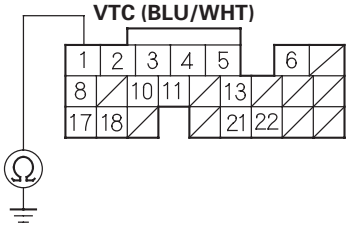

Wire side of female terminals

Is there continuity?

YES—Repair short in the wire between the ECM/PCM (B1) and the VTC oil control solenoid valve, then go to step 16.

NO—Go to step 13.

13. Connect VTC oil control solenoid valve 2P connector terminal No. 2 to body ground with a jumper wire.

VTC OIL CONTROL SOLENOID VALVE 2P CONNECTOR

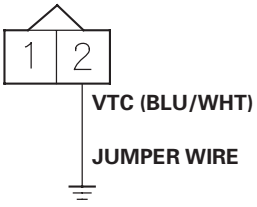

Wire side of female terminals

14. Check for continuity between ECM/PCM connector terminal B1 and body ground.

ECM/PCM CONNECTOR B (24P)

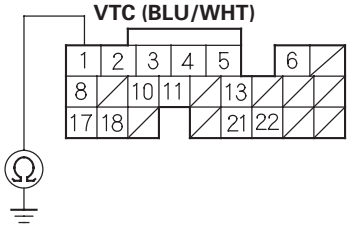

Wire side of female terminals

Is there continuity?

YES—Go to step 23.

NO—Repair open in the wire between the ECM/PCM (B1) and the VTC oil control solenoid valve, then go to step 16.

15. Replace the VTC oil control solenoid valve (see page 11-321).

16. Reconnect all connectors.

17. Turn the ignition switch ON (II).

18. Reset the ECM/PCM with the HDS.

19. Do the ECM/PCM idle learn procedure (see page 11-349).

20. Do the VTC TEST in the INSPECTION MENU with the HDS.

21. Check for Temporary DTCs or DTCs with the HDS.

Are any Temporary DTCs or DTCs indicated?

YES—If DTC P0010 is indicated, check for poor connections or loose terminals at the VTC oil control solenoid valve and the ECM/PCM, then go to step 1. If any other Temporary DTCs or DTCs are indicated, go to the indicated DTC's troubleshooting.

NO—Go to step 22.

(cont'd)

DTC Troubleshooting (cont'd)

22. Monitor the OBD STATUS for DTC P0010 in the DTCs MENU with the HDS.

    Does the screen indicate PASSED?

    YES—Troubleshooting is complete. ■

    NO—If the screen indicates FAILED, go to step 1 and recheck. If the screen indicates NOT COMPLETED, go to step 20 and recheck.

23. Update the ECM/PCM if it does not have the latest software, or substitute a known-good ECM/PCM (see page 11-6).

24. Do the VTC TEST in the INSPECTION MENU with the HDS.

25. Check for Temporary DTCs or DTCs with the HDS.

    Are any Temporary DTCs or DTCs indicated?

    YES—If DTC P0010 is indicated, check for poor connections or loose terminals at the VTC oil control solenoid valve and the ECM/PCM, then go to step 1. If any other Temporary DTCs or DTCs are indicated, go to the indicated DTC's troubleshooting.

    NO—If the ECM/PCM was updated, troubleshooting is complete. If the ECM/PCM was substituted, replace the original ECM/PCM (see page 11-284). ■

DTC P0011: VTC System Malfunction (2002-2004 models)

1. Reset the ECM/PCM (see page 11-4).

2. Start the engine. Hold the engine speed at 3,000 rpm without load (in Park or neutral) until the radiator fan comes on.

3. Test-drive at a steady speed between 20—40 mph (30—60 km/h) for 10 minutes.

4. Check for Temporary DTC P0011 with a scan tool or the HDS.

   Is Temporary DTC P0011 indicated?

   YES—Go to step 5.

   NO—Intermittent failure, system is OK at this time. Check for poor connections or loose terminals at the VTC oil control solenoid valve and the ECM/PCM. ■

5. Watch the low oil pressure indicator.

   Is the low oil pressure indicator on?

   YES—Check the oil pressure (see page 8-7). ■

   NO—Go to step 6.

6. Turn the ignition switch OFF.

7. Remove the power steering pump (see page 17-14) and the auto-tensioner (see page 4-45).

8. Remove the VTC strainer (A), and check it for clogging.

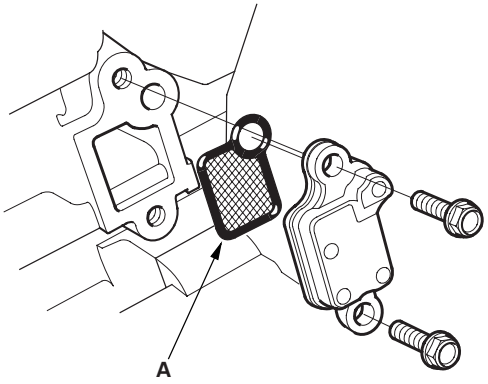

   Is the strainer OK?

   YES—Go to step 9.

   NO—Clean the VTC strainer, and replace the engine oil filter and the engine oil. ■

(cont'd)

DTC Troubleshooting (cont'd)

9. Check the VTC oil control solenoid valve (see page 11-321).

   Is the VTC oil control solenoid valve OK?

   YES—Go to step 10.

   NO—Clean the ports of the VTC oil control solenoid valve, or replace the VTC oil control solenoid valve (see page 11-321). ■

10. Install the VTC strainer and the VTC oil control solenoid valve.

11. Start the engine. Hold the engine speed at 700—1,000 rpm.

12. Connect ECM/PCM connector terminals A3 and B1 with a jumper wire.

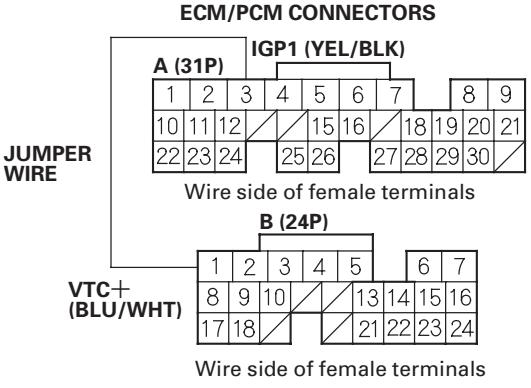

   Did the engine stall or run rough?

   YES—Test-drive at a steady speed between 20—40 mph (30—60 km/h) for 10 minutes. If temporary DTC P0011 is indicated, update the ECM/PCM if it does not have the latest software, or substitute a known-good ECM/PCM (see page 11-6), then recheck. If the symptom/indication goes away with a known-good ECM/PCM, replace the original ECM/PCM (see page 11-284). ■

   NO—Go to step 13.

13. Check the VTC actuator (see page 6-10).

   Is the VTC actuator OK?

   YES—Update the ECM/PCM if it does not have the latest software, or substitute a known-good ECM/PCM (see page 11-6), then recheck. If the symptom/indication goes away with a known-good ECM/PCM, replace the original ECM/PCM (see page 11-284). ■

   NO—Replace the VTC actuator. ■

DTC P0011: VTC System Malfunction (2005-2006 models)

1. Turn the ignition switch ON (II).

2. Clear the DTC with the HDS.

3. Start the engine.

4. Watch the low oil pressure indicator with the engine running.

   Is the low oil pressure indicator on?

   YES—Check the oil pressure (see page 8-7), then go to step 15.

   NO—Go to step 5.

5. Do the VTC TEST in the INSPECTION MENU with the HDS.

   Is the result OK?

   YES—Go to step 6.

   NO—Go to step 9.

6. Test-drive at a steady speed between 19—38 mph (30—60 km/h) for 10 minutes.

7. Check the VTC STATUS in the DATA LIST with the HDS.

   Does it indicate ON?

   YES—Go to step 8.

   NO—Go to step 6 and recheck.

8. Monitor the OBD STATUS for DTC P0011 in the DTCs MENU with the HDS.

   Does the screen indicate FAILED?

   YES—Go to step 9.

   NO—If the screen indicates PASSED, intermittent failure, system is OK at this time. Check for poor connections or loose terminals at the VTC oil control solenoid valve and the ECM/PCM. If the screen indicates NOT COMPLETED, go to step 5 and recheck.

9. Turn the ignition switch OFF.

10. Remove the power steering pump (see page 17-14) and the auto-tensioner (see page 4-45).

11. Remove the VTC strainer (A), and check it for clogging.

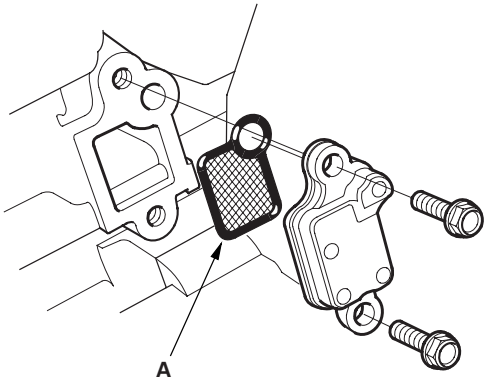

   Is the strainer OK?

   YES—Go to step 12.

   NO—Clean the VTC strainer, replace the engine oil filter and the engine oil, then go to step 14.

12. Test the VTC oil control solenoid valve (see page 11-321).

   Is the VTC oil control solenoid valve OK?

   YES—Go to step 13.

   NO—Replace the VTC oil control solenoid valve (see page 11-321), then go to step 14.

(cont'd)

DTC Troubleshooting (cont'd)

13. Inspect the VTC actuator (see page 6-10).

    Is the VTC actuator OK?

    YES—Go to step 14.

    NO—Replace the VTC actuator (see page 6-33), then go to step 14.

14. Turn the ignition switch ON (II).

15. Reset the ECM/PCM with the HDS.

16. Clear the CKP pattern with the HDS.

17. Do the ECM/PCM idle learn procedure (see page 11-349).

18. Do the CKP pattern learn procedure (see page 11-5).

19. Do the VTC TEST in the INSPECTION MENU with the HDS.

20. Check for Temporary DTCs or DTCs with the HDS.

    Are any Temporary DTCs or DTCs indicated?

    YES—If DTC P0011 is indicated, check for poor connections or loose terminals at the VTC oil control solenoid valve and the ECM/PCM, then go to step 1. If any other Temporary DTCs or DTCs are indicated, go to the indicated DTC's troubleshooting.

    NO—Go to step 21.

21. Monitor the OBD STATUS for DTC P0011 in the DTCs MENU with the HDS.

    Does the screen indicate PASSED?

    YES—Troubleshooting is complete. ■

    NO—If the screen indicates FAILED, check for poor connections or loose terminals at the VTC oil control solenoid valve and the ECM/PCM, then go to step 1. If the screen indicates NOT COMPLETED, go to step 19 and recheck.

DTC P0340: CMP Sensor A No Signal (2002-2004 models)

DTC P0344: CMP Sensor A Circuit Intermittent Interruption (2002-2004 models)

1. Reset the ECM/PCM (see page 11-4).

2. Start the engine.

   Is DTC P0340 and/or P0344 indicated?

   YES—Go to step 3.

   NO—Intermittent failure, system is OK at this time. Check for poor connections or loose terminals at CMP sensor A and the ECM/PCM.■

3. Turn the ignition switch OFF.

4. Disconnect CMP sensor A 3P connector.

5. Turn the ignition switch ON (II).

6. Measure voltage between CMP sensor A 3P connector terminal No. 3 and body ground.

CMP SENSOR A 3P CONNECTOR

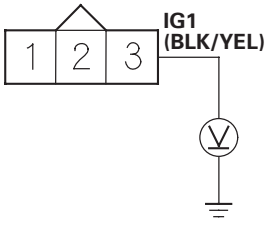

Wire side of female terminals

Is there battery voltage?

YES—Go to step 7.

NO—Check the No. 4 ACG (10 A) fuse in the under-dash fuse/relay box. If the fuse is OK, repair open in the wire between CMP sensor A and the No. 4 ACG (10 A) fuse.■

7. Measure voltage between CMP sensor A 3P connector terminal No. 1 and body ground.

CMP SENSOR A 3P CONNECTOR

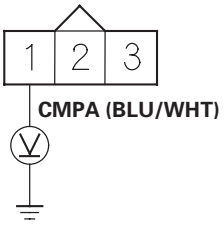

Wire side of female terminals

Is there about 5 V?

YES—Go to step 8.

NO—Go to step 10.

8. Measure voltage between CMP sensor A 3P connector terminals No. 2 and No. 3.

CMP SENSOR A 3P CONNECTOR

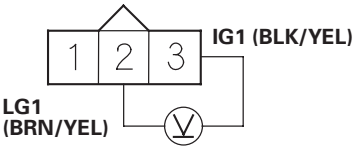

Wire side of female terminals

Is there battery voltage?

YES—Go to step 9.

NO—Repair open in the wire between CMP sensor A and G101.■

(cont'd)

DTC Troubleshooting (cont'd)

9. Substitute a known-good CMP sensor A and recheck.

   Is DTC P0340 and/or P0344 indicated?

   YES—Update the ECM/PCM if it does not have the latest software, or substitute a known-good ECM/PCM (see page 11-6), then recheck. If the symptom/indication goes away with a known-good ECM/PCM, replace the original ECM/PCM (see page 11-284). ■

   NO—Replace original CMP sensor A (see page 11-323). ■

10. Measure voltage between ECM/PCM connector terminal A25 and body ground.

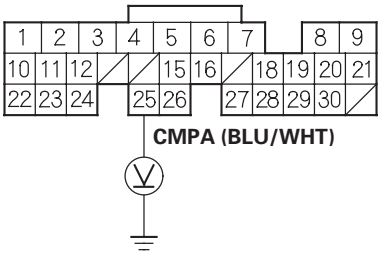

Wire side of female terminals

   Is there about 5 V?

   YES—Repair open in the wire between the ECM/PCM (A25) and CMP sensor A. ■

   NO—Go to step 11.

11. Turn the ignition switch OFF.

12. Disconnect ECM/PCM connector A (31P).

13. Check for continuity between ECM/PCM connector terminal A25 and body ground.

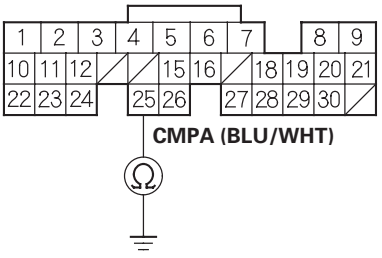

Wire side of female terminals

   Is there continuity?

   YES—Repair short in the wire between the ECM/PCM (A25) and CMP sensor A. ■

   NO—Update the ECM/PCM if it does not have the latest software, or substitute a known-good ECM/PCM (see page 11-6), then recheck. If the symptom/indication goes away with a known-good ECM/PCM, replace the original ECM/PCM (see page 11-284). ■

DTC P0340: CMP Sensor A No Signal (2005-2006 models)

1. Turn the ignition switch ON (II).
2. Clear the DTC with the HDS.
3. Start the engine.
4. Check for Temporary DTCs or DTCs with the HDS.

   Is DTC P0340 indicated?

   YES—Go to step 5.

   NO—Intermittent failure, system is OK at this time. Check for poor connections or loose terminals at CMP sensor A and the ECM/PCM. ■

5. Turn the ignition switch OFF.
6. Disconnect CMP sensor A 3P connector.
7. Turn the ignition switch ON (II).
8. Measure voltage between CMP sensor A 3P connector terminal No. 3 and body ground.

CMP SENSOR A 3P CONNECTOR

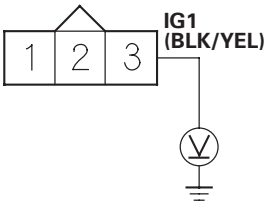

Wire side of female terminals

Is there battery voltage?

YES—Go to step 9.

NO—Repair open in the wire between the No. 4 ACG (10 A) fuse in the under-dash fuse/relay box and CMP sensor A, then go to step 18.

9. Measure voltage between CMP sensor A 3P connector terminal No. 1 and body ground.

CMP SENSOR A 3P CONNECTOR

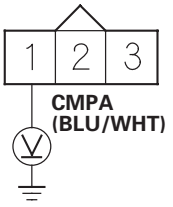

Wire side of female terminals

Is there about 5 V?

YES—Go to step 10.

NO—Go to step 11.

10. Measure voltage between CMP sensor A 3P connector terminals No. 2 and No. 3.

CMP SENSOR A 3P CONNECTOR

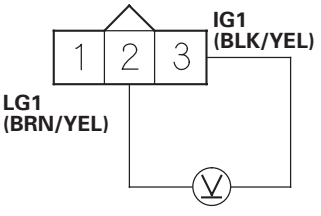

Wire side of female terminals

Is there battery voltage?

YES—Go to step 16.

NO—Repair open in the wire between CMP sensor A and G101, then go to step 18.

(cont'd)

DTC Troubleshooting (cont'd)

11. Measure voltage between ECM/PCM connector terminal A19 and body ground.

ECM/PCM CONNECTOR A (31P)

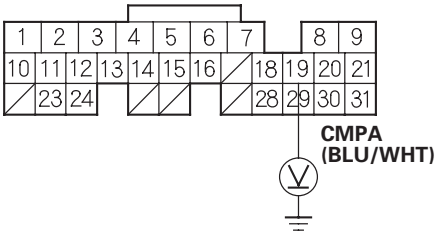

Wire side of female terminals

Is there about 5 V?

YES—Repair open in the wire between the ECM/PCM (A19) and CMP sensor A, then go to step 18.

NO—Go to step 12.

12. Turn the ignition switch OFF.

13. Jump the SCS line with the HDS.

14. Disconnect ECM/PCM connector A (31P).

15. Check for continuity between ECM/PCM connector terminal A19 and body ground.

ECM/PCM CONNECTOR A (31P)

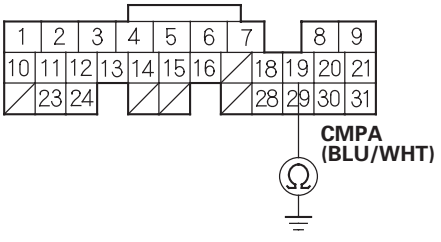

Wire side of female terminals

Is there continuity?

YES—Repair short in the wire between the ECM/PCM (A19) and CMP sensor A, then go to step 18.

NO—Go to step 24.

16. Turn the ignition switch OFF.

17. Replace CMP sensor A (see page 11-323).

18. Reconnect all connectors.

19. Turn the ignition switch ON (II).

20. Reset the ECM/PCM with the HDS.

21. Do the ECM/PCM idle learn procedure (see page 11-349).

22. Start the engine.

23. Check for Temporary DTCs or DTCs with the HDS.

Are any Temporary DTCs or DTCs indicated?

YES—If DTC P0340 is indicated, check for poor connections or loose terminals at CMP sensor A and the ECM/PCM, then go to step 1. If any other Temporary DTCs or DTCs are indicated, go to the indicated DTC's troubleshooting.

NO—Troubleshooting is complete. ■

24. Update the ECM/PCM if it does not have the latest software, or substitute a known-good ECM/PCM (see page 11-6).

25. Check for Temporary DTCs or DTCs with the HDS.

Are any Temporary DTCs or DTCs indicated?

YES—If DTC P0340 is indicated, check for poor connections or loose terminals at CMP sensor A and the ECM/PCM, then go to step 1. If any other Temporary DTCs or DTCs are indicated, go to the indicated DTC's troubleshooting.

NO—If the ECM/PCM was updated, troubleshooting is complete. If the ECM/PCM was substituted, replace the original ECM/PCM (see page 11-284). ■

DTC P0341: CMP Sensor A and CKP Sensor Incorrect Phase Detected (2002-2004 models)

1. Reset the ECM/PCM (see page 11-4).

2. Start the engine.

   Is DTC P0341 indicated?

   YES—Go to step 3.

   NO—Intermittent failure, system is OK at this time. Check for poor connections or loose terminals at CMP sensor A and the ECM/PCM. ■

3. Check the VTC oil control solenoid valve (see page 11-321).

   Is the VTC oil control solenoid valve OK?

   YES—Go to step 4.

   NO—Clean the VTC oil control solenoid valve, or replace it (see page 11-321). ■

4. Remove the head cover, and check the cam chain for damage or looseness (see page 6-25).

   Is the cam chain OK?

   YES—Go to step 5.

   NO—Replace the cam chain (see page 6-14). ■

5. Check the VTC actuator (see page 6-10).

   Is the VTC actuator OK?

   YES—Update the ECM/PCM if it does not have the latest software, or substitute a known-good ECM/PCM (see page 11-6), then recheck. If the symptom/indication goes away with a known-good ECM/PCM, replace the original ECM/PCM (see page 11-284). ■

   NO—Replace the VTC actuator. ■

DTC Troubleshooting (cont'd)

DTC P0341: CMP Sensor A and CKP Sensor Incorrect Phase Detected (2005-2006 models)

1. Turn the ignition switch ON (II).
2. Clear the DTC with the HDS.
3. Test-drive at a steady speed between 19—38 mph (30—60 km/h) for 10 minutes.
4. Check for Temporary DTCs or DTCs with the HDS.

   Is DTC P0341 indicated?

   YES—Go to step 9.

   NO—Go to step 5.
5. Do the VTC TEST in the INSPECTION MENU with the HDS.

   Is the result OK?

   YES—Go to step 6.

   NO—Go to step 9.
6. Test-drive at a steady speed between 19—38 mph (30—60 km/h) for 10 minutes.
7. Check the VTC STATUS in the DATA LIST with the HDS.

   Does it indicate ON?

   YES—Go to step 8.

   NO—Go to step 6 and recheck.
8. Monitor the OBD STATUS for DTC P0341 in the DTCs MENU with the HDS.

   Does the screen indicate FAILED?

   YES—Go to step 9.

   NO—If the screen indicates PASSED, intermittent failure, system is OK at this time. If the screen indicates NOT COMPLETED, go to step 6 and recheck.
9. Turn the ignition switch OFF.
10. Test the VTC oil control solenoid valve (see page 11-321).

    Is the VTC oil control solenoid valve OK?

    YES—Go to step 11.

    NO—Replace the VTC oil control solenoid valve (see page 11-321), then go to step 14.
11. Check the camshaft timing (see page 6-17).

    Is the camshaft timing OK?

    YES—Go to step 12.

    NO—Replace the auto-tensioner (see page 6-22), and reset the camshaft timing (see page 6-17), then go to step 14.
12. Check the cam chain for damage or looseness (see page 6-25).

    Is the cam chain damaged?

    YES—Replace the cam chain and the auto-tensioner (see page 6-14), then go to step 14.

    NO—Go to step 13.
13. Inspect the VTC actuator (see page 6-10).

    Is the actuator OK?

    YES—Go to step 14.

    NO—Replace the VTC actuator (see page 6-33), then go to step 14.

14. Turn the ignition switch ON (II).

15. Reset the ECM/PCM with the HDS.

16. Clear the CKP pattern with the HDS.

17. Do the ECM/PCM idle learn procedure (see page 11-349).

18. Do the CKP pattern learn procedure (see page 11-5).

19. Test-drive at a steady speed between 19—38 mph (30—60 km/h) for 10 minutes.

20. Check for Temporary DTCs or DTCs with the HDS.

    Are any Temporary DTCs or DTCs indicated?

    YES—If DTC P0341 is indicated, check for poor connections or loose terminals at the VTC oil control solenoid valve and the ECM/PCM, then go to step 1. If any other Temporary DTCs or DTCs are indicated, go to the indicated DTC's troubleshooting.

    NO—Go to step 21.

21. Monitor the OBD STATUS for DTC P0341 in the DTCs MENU with the HDS.

    Does the screen indicate PASSED?

    YES—Troubleshooting is complete. ■

    NO—If the screen indicates FAILED, check for poor connections or loose terminals at the VTC oil control solenoid valve and the ECM/PCM, then go to step 1. If the screen indicates NOT COMPLETED, go to step 19 and recheck.

DTC Troubleshooting (cont'd)

DTC P0344: CMP Sensor A Circuit Intermittent Interruption (2005-2006 models)

1. Record all freeze data and on-board snapshots with the HDS.

2. Clear the DTC with the HDS.

3. Start engine, and let it idle for 10 seconds.

4. Check the CMP NOISE A COUNT in the DATA LIST with the HDS.

   Are 0 counts indicated?

   YES—Go to step 7.

   NO—Go to step 5.

5. Test-drive the vehicle for several minutes in the range of these recorded freeze data parameters:

   - Engine speed
   - Vehicle speed

6. Check the CMP NOISE A COUNT in the DATA LIST with the HDS.

   Are 0 counts indicated?

   YES—Go to step 7.

   NO—Intermittent failure, system is OK at this time. Check for poor connections or loose terminals at CMP sensor A and the ECM/PCM. ■

7. Check for poor or loose connections and terminals at these locations:

   - CMP sensor A
   - ECM/PCM
   - Engine ground
   - Body ground

   Are the connections and terminals OK?

   YES—Go to step 8.

   NO—Repair the connectors or terminals, then go to step 11.

8. Check the CMP sensor A pulse plate for damage (see page 6-32).

   Is the pulse plate damaged?

   YES—Replace the CMP sensor A pulse plate (see page 6-32), then go to step 11.

   NO—Go to step 9.

9. Turn the ignition switch OFF.

10. Replace CMP sensor A (see page 11-323).

11. Turn the ignition switch ON (II).

12. Reset the ECM/PCM with the HDS.

13. Do the ECM/PCM idle learn procedure (see page 11-349).

14. Start the engine, and let it idle for 10 seconds.

15. Check for Temporary DTCs or DTCs with the HDS.

    Are any Temporary DTCs or DTCs indicated?

    YES—If DTC P0344 is indicated, check for poor connections or loose terminals at CMP sensor A and the ECM/PCM, then go to step 1. If any other Temporary DTCs or DTCs are indicated, go to the indicated DTC's troubleshooting.

    NO—Troubleshooting is complete. ■

DTC 1009: VTC Advance Malfunction (2005-2006 models)

NOTE: If DTC P0341 is stored at the same time as DTC P1009, troubleshoot DTC P1009 first, then recheck for DTC P0341.

1. Turn the ignition switch ON (II).
2. Clear the DTC with the HDS.
3. Start the engine.
4. Check for Temporary DTCs or DTCs with the HDS.

   Is DTC P1009 indicated?

   YES—Go to step 5.

   NO—Intermittent failure, system is OK at this time. ■

5. Turn the ignition switch OFF.
6. Remove the power steering pump (see page 17-14) and auto-tensioner (see page 4-45).
7. Remove the VTC strainer (A), and check it for clogging.

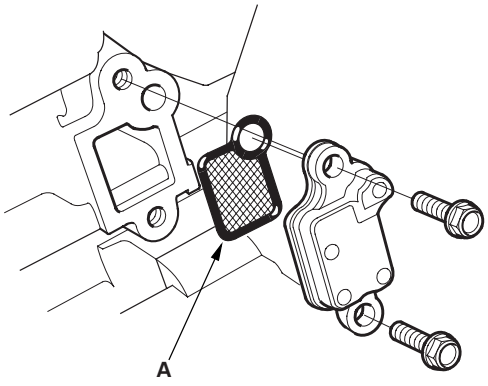

   Is the strainer OK?

   YES—Go to step 8.

   NO—Clean the VTC strainer, replace the engine oil filter and the engine oil, then go to step 10.

8. Test the VTC oil control solenoid valve (see page 11-321).

   Is the valve OK?

   YES—Go to step 9.

   NO—Replace the VTC oil control solenoid valve (see page 11-321), then go to step 10.

9. Inspect the VTC actuator (see page 6-10).

   Is the actuator OK?

   YES—Check the VTC system oil passages (see page 8-6), then go to step 10.

   NO—Replace the VTC actuator (see page 6-33), then go to step 10.

10. Turn the ignition switch ON (II).
11. Reset the ECM/PCM with the HDS.
12. Clear the CKP pattern with the HDS.
13. Do the ECM/PCM idle learn procedure (see page 11-349).
14. Do the CKP pattern learn procedure (see page 11-5).
15. Check for Temporary DTCs or DTCs with the HDS.

    Are any Temporary DTCs or DTCs indicated?

    YES—If DTC P1009 is indicated, check the oil passages for at the VTC system, then go to step 1. If any other Temporary DTCs or DTCs are indicated, go to the indicated DTC's troubleshooting.

    NO—Troubleshooting is complete. ■

DTC Troubleshooting (cont'd)

DTC P1259: VTEC System Malfunction (2002-2003 models)

Special Tools Required
- Pressure gauge adapter 07NAJ-P07010A
- A/T low pressure gauge w/panel 07406-0070300
- A/T pressure hose 07406-0020201
- A/T pressure hose, 2,210 mm 07MAJ-PY4011A
- A/T pressure adaptor 07MAJ-PY40120
- Oil pressure hose 07ZAJ-S5A0200

1. Reset the ECM/PCM (see page 11-4).

2. Check the engine oil level, and refill if necessary. Check for external damage to the oil pan (K20A3 engine).

3. Start the engine. Hold the engine speed at 3,000 rpm without load (in Park or neutral) until the radiator fan comes on.

4. Road test the vehicle:
   Accelerate in 1st gear to an engine speed over 5,000 rpm. Hold that engine speed for at least 2 seconds. If DTC P1259 is not repeated during the first road test, repeat this test two more times.

   Is DTC P1259 indicated?

   YES—Go to step 5.

   NO—Intermittent failure, system is OK at this time. Check the oil consumption if oil was added in step 2. Check for poor connections or loose terminals at the rocker arm oil control solenoid (VTEC solenoid valve), the rocker arm oil pressure switch (VTEC oil pressure switch), and the ECM/PCM. ■

5. Turn the ignition switch OFF.

6. Disconnect the rocker arm oil pressure switch (VTEC oil pressure switch) 2P connector.

7. Check the rocker arm oil pressure switch (VTEC oil pressure switch) for continuity between rocker arm oil pressure switch (VTEC oil pressure switch) 2P connector terminals No. 1 and No. 2.

ROCKER ARM OIL PRESSURE SWITCH (VTEC OIL PRESSURE SWITCH) 2P CONNECTOR

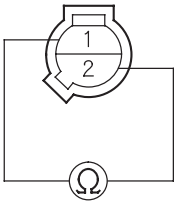

Terminal side of male terminals

Is there continuity?

YES—Go to step 8.

NO—Replace the rocker arm oil pressure switch (VTEC oil pressure switch) (see page 11-324). ■

8. Turn the ignition switch ON (II).

9. Measure voltage between rocker arm oil pressure switch (VTEC oil pressure switch) 2P connector terminal No. 1 and body ground.

ROCKER ARM OIL PRESSURE SWITCH (VTEC OIL PRESSURE SWITCH) 2P CONNECTOR

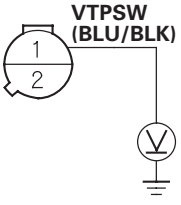

Wire side of female terminals

Is there battery voltage?

YES—Go to step 14.

NO—Go to step 10.

10. Measure voltage between ECM/PCM connector terminal B9 and body ground.

ECM/PCM CONNECTOR B (24P)

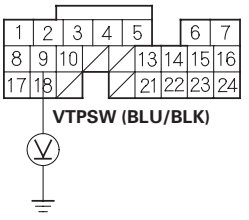

Wire side of female terminals

Is there battery voltage?

YES—Repair open in the wire between the rocker arm oil pressure switch (VTEC oil pressure switch) and the ECM/PCM (B9).■

NO—Go to step 11.

11. Turn the ignition switch OFF.

12. Disconnect ECM/PCM connector B (24P).

13. Check for continuity between ECM/PCM connector terminal B9 and body ground.

ECM/PCM CONNECTOR B (24P)

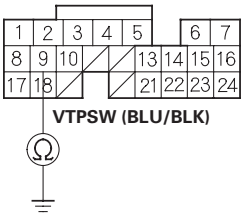

Wire side of female terminals

Is there continuity?

YES—Repair short in the wire between the rocker arm oil pressure switch (VTEC oil pressure switch) and the ECM/PCM (B9).■

NO—Update the ECM/PCM if it does not have the latest software, or substitute a known-good ECM/PCM (see page 11-6), then recheck. If the symptom/indication goes away with a known-good ECM/PCM, replace the original ECM/PCM (see page 11-284).■

14. Measure voltage between rocker arm oil pressure switch (VTEC oil pressure switch) 2P connector terminals No. 1 and No. 2.

ROCKER ARM OIL PRESSURE SWITCH (VTEC OIL PRESSURE SWITCH) 2P CONNECTOR

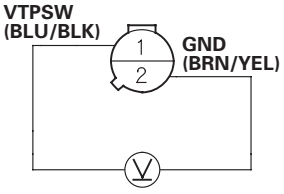

Wire side of female terminals

Is there battery voltage?

YES—Go to step 15.

NO—Repair open in the wire between the rocker arm oil pressure switch (VTEC oil pressure switch) and G101.■

15. Turn the ignition switch OFF.

16. Disconnect the rocker arm oil control solenoid (VTEC solenoid valve) 2P connector.

17. Check for resistance between rocker arm oil control solenoid (VTEC solenoid valve) 2P connector terminals No. 1 and No. 2.

ROCKER ARM OIL CONTROL SOLENOID (VTEC SOLENOID VALVE) 2P CONNECTOR

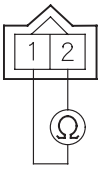

Terminal side of male terminals

Is there 14—30 Ω ?

YES—Go to step 18.

NO—Replace the rocker arm oil control solenoid (VTEC solenoid valve) (see page 11-324).■

(cont'd)

DTC Troubleshooting (cont'd)

18. Remove the rocker arm oil pressure switch (VTEC oil pressure switch) (A) and install the special tools as shown, then reinstall the rocker arm oil pressure switch (VTEC oil pressure switch).

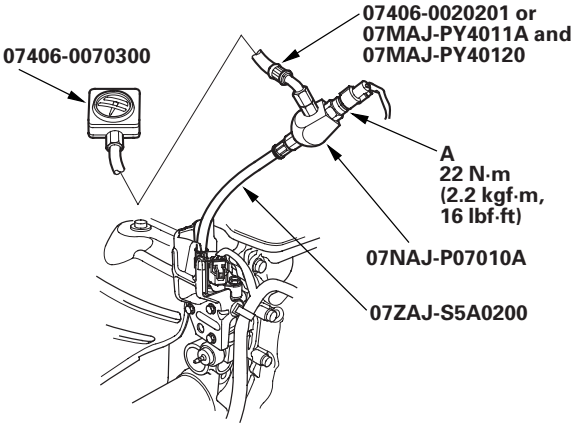

19. Reconnect the rocker arm oil control solenoid (VTEC solenoid valve) 2P connector and rocker arm oil pressure switch (VTEC oil pressure switch) 2P connector.

20. Connect a tachometer, a scan tool, or the HDS.

21. Start the engine. Hold the engine speed at 3,000 rpm without load (in Park or neutral) until the radiator fan comes on.

22. Check the oil pressure at engine speed of 1,000 and 2,000 rpm. Keep the measuring time as short as possible (less than 1 minute) because the engine is running without load.

    Is the oil pressure below 49 kPa (0.5 kgf/cm², 7 psi)?

    YES—Go to step 23.

    NO—Inspect the rocker arm oil control solenoid (VTEC solenoid valve) (see page 11-323) and the rocker arm oil control solenoid (VTEC solenoid valve) filter (see page 11-324). ■

23. Turn the ignition switch OFF.

24. Disconnect the rocker arm oil control solenoid (VTEC solenoid valve) 2P connector.

25. Attach the battery positive terminal to rocker arm oil control solenoid (VTEC solenoid valve) 2P connector terminal No. 2.

26. Start the engine, then connect the battery negative terminal to rocker arm oil control solenoid (VTEC solenoid valve) 2P connector terminal No. 1, and check the oil pressure at an engine speed of 3,000 rpm.

    Is the oil pressure above 390 kPa (4.0 kgf/cm², 57 psi)?

    YES—Go to step 27.

    NO—Inspect the rocker arm oil control solenoid (VTEC solenoid valve) (see page 11-323). ■

27. With the battery terminals still connected to the rocker arm oil control solenoid (VTEC solenoid valve) connector, measure voltage between ECM/PCM connector terminal B9 and body ground.

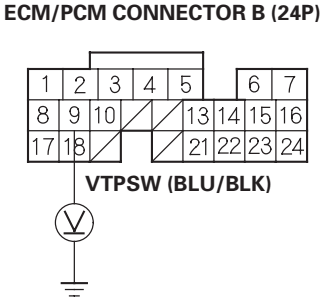

    Is there battery voltage above 4,000 rpm?

    YES—Go to step 28.

    NO—Replace the rocker arm oil pressure switch (VTEC oil pressure switch) (see page 11-324). ■

28. Turn the ignition switch OFF.

29. Disconnect the battery terminals from the rocker arm oil control solenoid (VTEC solenoid valve) terminal connector.

30. Disconnect ECM/PCM connector B (24P).

31. Check for continuity between ECM/PCM connector terminal B15 and body ground.

ECM/PCM CONNECTOR B (24P)

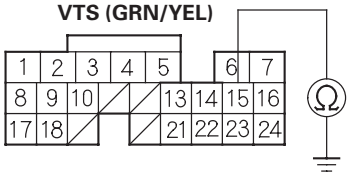

Wire side of female terminals

Is there continuity?

YES—Repair short in the wire between the rocker arm oil control solenoid (VTEC solenoid valve) and the ECM/PCM (B15). ■

NO—Go to step 32.

32. Connect rocker arm oil control solenoid (VTEC solenoid valve) 2P connector terminal No. 2 to body ground with a jumper wire.

ROCKER ARM OIL CONTROL SOLENOID (VTEC SOLENOID VALVE) 2P CONNECTOR

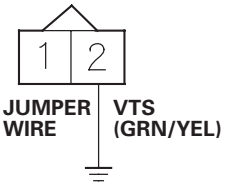

Wire side of female terminals

33. Check for continuity between ECM/PCM connector terminal B15 and body ground.

ECM/PCM CONNECTOR B (24P)

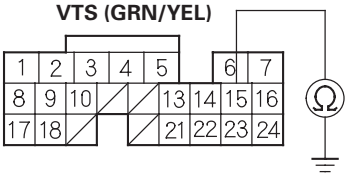

Wire side of female terminals

Is there continuity?

YES—Update the ECM/PCM if it does not have the latest software, or substitute a known-good ECM/PCM (see page 11-6), then recheck. If the symptom/indication goes away with a known-good ECM/PCM, replace the original ECM/PCM (see page 11-284). ■

NO—Repair open in the wire between the rocker arm oil control solenoid (VTEC solenoid valve) and the ECM/PCM (B15). ■

DTC Troubleshooting (cont'd)

DTC P2646: Rocker Arm Oil Pressure Switch (VTEC Oil Pressure Switch) Circuit Low Voltage
(2004 model)

Special Tools Required
- Pressure gauge adapter 07NAJ-P07010A
- A/T low pressure gauge w/panel 07406-0070300
- A/T pressure hose 07406-0020201
- A/T pressure hose, 2,210 mm 07MAJ-PY4011A
- A/T pressure adaptor 07MAJ-PY40120
- Oil pressure hose 07ZAJ-S5A0200

1. Turn the ignition switch OFF.

2. Check the engine oil level.

   Is the level OK?

   YES—Go to step 3.

   NO—Adjust the engine oil to the proper level. ■

3. Turn the ignition switch ON (II).

4. Reset the ECM/PCM (see page 11-4).

5. Start the engine. Hold the engine speed at 3,000 rpm without load (in Park or neutral) until the radiator fan comes on, then let it idle.

6. Test-drive under these conditions:
   Accelerate in 1st gear to an engine speed over 5,000 rpm. Hold the speed for at least 2 seconds.

   Is DTC P2646 indicated?

   YES—Go to step 7.

   NO—Intermittent failure, system is OK at this time. Check for poor connections or loose terminals at the rocker arm oil pressure switch (VTEC oil pressure switch), the rocker arm oil control solenoid (VTEC solenoid valve) and the ECM/PCM. ■

7. Turn the ignition switch OFF.

8. Remove the rocker arm oil pressure switch (VTEC oil pressure switch) (A) and install the special tools as shown, then install the rocker arm oil pressure switch (VTEC oil pressure switch) to the oil pressure gauge adapter (B).

   NOTE: Install the switch in the reverse order of removal with a new O-ring.

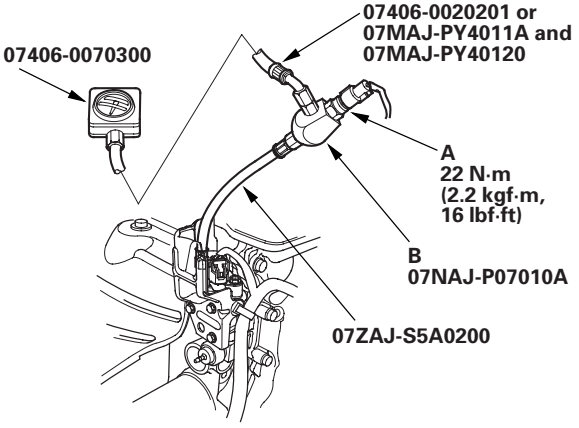

9. Disconnect the rocker arm oil control solenoid (VTEC solenoid valve) 2P connector.

10. Start the engine. Hold the engine speed at 3,000 rpm without load (in Park or neutral) until the radiator fan comes on, then let it idle.

11. Attach the battery positive terminal to rocker arm oil control solenoid (VTEC solenoid valve) 2P connector terminal No. 2.

12. Connect the battery negative terminal to rocker arm oil control solenoid (VTEC solenoid valve) 2P connector terminal No. 1, and check the oil pressure at an engine speed of 3,000 rpm.

    Is the oil pressure above 390 kPa (4.0 kgf/cm^2, 57 psi)?

    YES—Go to step 13.

    NO—Inspect the rocker arm oil control solenoid (VTEC solenoid valve) (see page 11-323). ■

13. Disconnect the rocker arm oil pressure switch (VTEC oil pressure switch) 2P connector.

14. At the rocker arm oil pressure switch (VTEC oil pressure switch) side, check for continuity between rocker arm oil pressure switch (VTEC oil pressure switch) terminals No. 1 and No. 2 under the same conditions as step 12.

ROCKER ARM OIL PRESSURE SWITCH (VTEC OIL PRESSURE SWITCH) 2P CONNECTOR

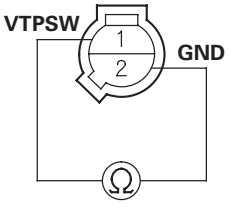

Terminal side of male terminals

Is there continuity?

YES—Replace the rocker arm oil pressure switch (VTEC oil pressure switch) (see page 11-324). ■

NO—Go to step 15.

15. Turn the ignition switch OFF.

16. Disconnect the battery terminals from the rocker arm oil control solenoid (VTEC solenoid valve) terminal connector.

17. Disconnect ECM/PCM connector B (24P).

18. Check for continuity between ECM/PCM connector terminal B9 and body ground.

ECM/PCM CONNECTOR B (24P)

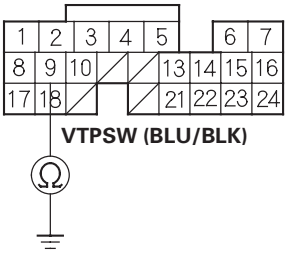

Wire side of female terminals

Is there continuity?

YES—Repair short in the wire between the ECM/PCM (B9) and the rocker arm oil pressure switch (VTEC oil pressure switch). ■

NO—Go to step 19.

19. Check for continuity between rocker arm oil control solenoid (VTEC solenoid valve) 2P connector terminal No. 1 and body ground.

ROCKER ARM OIL CONTROL SOLENOID (VTEC SOLENOID VALVE) 2P CONNECTOR

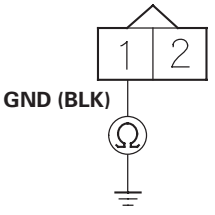

Wire side of female terminals

Is there continuity?

YES—Go to step 20.

NO—Repair open in the wire between the rocker arm oil control solenoid (VTEC solenoid valve) and G101. ■

(cont'd)

DTC Troubleshooting (cont'd)

20. Check for continuity between ECM/PCM connector terminal B15 and body ground.

ECM/PCM CONNECTOR B (24P)

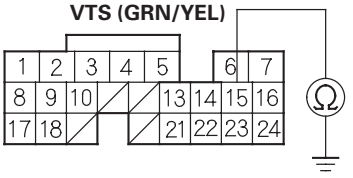

Wire side of female terminals

Is there continuity?

YES—Repair short in the wire between the ECM/PCM (B15) and the rocker arm oil control solenoid (VTEC solenoid valve). ■

NO—Go to step 21.

21. Connect rocker arm oil control solenoid (VTEC solenoid valve) 2P connector terminal No. 2 to body ground with a jumper wire.

ROCKER ARM OIL CONTROL SOLENOID (VTEC SOLENOID VALVE) 2P CONNECTOR

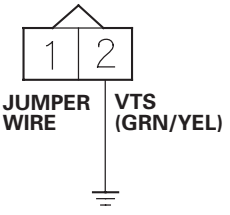

Wire side of female terminals

22. Check for continuity between ECM/PCM connector terminal B15 and body ground.

ECM/PCM CONNECTOR B (24P)

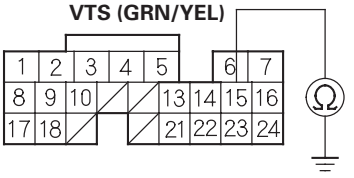

Wire side of female terminals

Is there continuity?

YES—Update the ECM/PCM if it does not have the latest software, or substitute a known-good ECM/PCM (see page 11-6), then recheck. If the symptom/indication goes away with a known-good ECM/PCM, replace the original ECM/PCM (see page 11-284). ■

NO—Repair open in the wire between the ECM/PCM (B15) and the rocker arm oil control solenoid (VTEC solenoid valve). ■

DTC P2646: Rocker Arm Oil Pressure Switch (VTEC Oil Pressure Switch) Circuit Low Voltage (2005-2006 models)

Special Tools Required
- Pressure gauge adapter 07NAJ-P07010A
- A/T low pressure gauge w/panel 07406-0070300
- A/T pressure hose 07406-0020201
- A/T pressure hose, 2,210 mm 07MAJ-PY4011A
- A/T pressure adapter 07MAJ-PY40120
- Oil pressure hose 07ZAJ-S5A0200

1. Check the engine oil level.

   Is the level OK?

   YES—Go to step 2.

   NO—Adjust the engine oil to the proper level, then go to step 21.

2. Turn the ignition switch ON (II).

3. Clear the DTC with the HDS.

4. Do the VTEC TEST in the INSPECTION MENU with the HDS.

   Is the result OK?

   YES—Intermittent failure, system is OK at this time. Check for poor connections or loose terminals at the rocker arm oil pressure switch (VTEC oil pressure switch), the rocker arm oil control solenoid (VTEC solenoid valve), and the ECM/PCM. ■

   NO—Go to step 5.

5. Turn the ignition switch OFF.

6. Disconnect the rocker arm oil pressure switch (VTEC oil pressure switch) 2P connector.

7. Turn the ignition switch ON (II).

8. Check the VTEC PRES SW in the DATA LIST with the HDS.

   Is SWITCH ON indicated?

   YES—Go to step 9.

   NO—Replace the rocker arm oil pressure switch (VTEC oil pressure switch) (see page 11-324), then go to step 21.

9. Turn the ignition switch OFF.

10. Remove the rocker arm oil pressure switch (VTEC oil pressure switch) (A) and install the special tools as shown, then install the rocker arm oil pressure switch (VTEC oil pressure switch) to the oil pressure gauge adapter (B).

    NOTE: Install the switch in the reverse order of removal with a new O-ring.

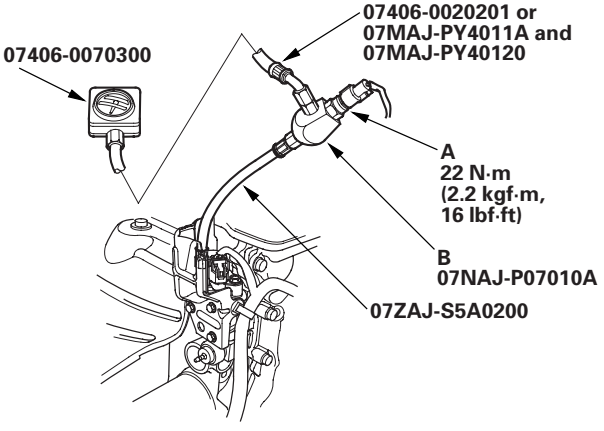

11. Turn the ignition switch ON (II).

12. Do the VTEC TEST in the INSPECTION MENU with the HDS.

13. Check the oil pressure.

    Is the oil pressure below 49 kPa (0.5 kgf/cm^2, 7 psi)?

    YES—Inspect the VTEC system. If it is OK, replace the rocker arm oil control solenoid (VTEC solenoid valve) (see page 11-324), then go to step 21.

    NO—Go to step 14.

(cont'd)

DTC Troubleshooting (cont'd)

14. Turn the ignition switch OFF.

15. Jump the SCS line with the HDS.

16. Disconnect the rocker arm oil pressure switch (VTEC oil pressure switch) 2P connector.

17. Disconnect ECM/PCM connector B (24P).

18. Check for continuity between ECM/PCM connector terminal B11 and body ground.

ECM/PCM CONNECTOR B (24P)

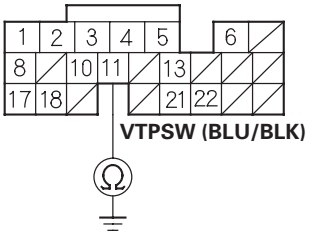

Wire side of female terminals

Is there continuity?

YES—Repair short in the wire between the ECM/PCM (B11) and the rocker arm oil pressure switch (VTEC oil pressure switch), then go to step 19.

NO—Go to step 27.

19. Reconnect the rocker arm oil pressure switch (VTEC oil pressure switch) 2P connector.

20. Reconnect ECM/PCM connector B (24P).

21. Turn the ignition switch ON (II).

22. Reset the ECM/PCM with the HDS.

23. Do the ECM/PCM idle learn procedure (see page 11-349).

24. Do the VTEC TEST in the INSPECTION MENU with the HDS.

25. Check for Temporary DTCs or DTCs with the HDS.

Are any Temporary DTCs or DTCs indicated?

YES—If DTC P2646 is indicated, check for poor connections or loose terminals at the rocker arm oil pressure switch (VTEC oil pressure switch), the rocker arm oil control solenoid (VTEC solenoid valve), and the ECM/PCM, then go to step 1. If any other Temporary DTCs or DTCs are indicated, go to the indicated DTC's troubleshooting.

NO—Go to step 26.

26. Monitor the OBD STATUS for DTC P2646 in the DTCs MENU with the HDS.

Does the screen indicate PASSED?

YES—Troubleshooting is complete. ■

NO—If the screen indicates FAILED, go to step 1 and recheck. If the screen indicates NOT COMPLETED, go to step 24 and recheck.

27. Update the ECM/PCM if it does not have the latest software, or substitute a known-good ECM/PCM (see page 11-6).

28. Do the VTEC TEST in the INSPECTION MENU with the HDS.

29. Check for Temporary DTCs or DTCs with the HDS.

Are any Temporary DTCs or DTCs indicated?

YES—If DTC P2646 is indicated, check for poor connections or loose terminals at the rocker arm oil pressure switch (VTEC oil pressure switch), the rocker arm oil control solenoid (VTEC solenoid valve), and the ECM/PCM, then go to step 1. If any other Temporary DTCs or DTCs are indicated, go to the indicated DTC's troubleshooting.

NO—If the ECM/PCM was updated, troubleshooting is complete. If the ECM/PCM was substituted, replace the original ECM/PCM (see page 11-284). ■

DTC P2647: Rocker Arm Oil Pressure Switch (VTEC Oil Pressure Switch) Circuit High Voltage (2004 model)

Special Tools Required
- Pressure gauge adapter 07NAJ-P07010A
- A/T low pressure gauge w/panel 07406-0070300
- A/T pressure hose 07406-0020201
- A/T pressure hose, 2,210 mm 07MAJ-PY4011A
- A/T pressure adaptor 07MAJ-PY40120
- Oil pressure hose 07ZAJ-S5A0200

1. Turn the ignition switch OFF.

2. Check the engine oil level.

   Is the level OK?

   YES—Go to step 3.

   NO—Adjust the engine oil to the proper level. ■

3. Turn the ignition switch ON (II).

4. Reset the ECM/PCM (see page 11-4).

5. Start the engine. Hold the engine speed at 3,000 rpm without load (in Park or neutral) until radiator fan comes on, then let it idle.

   Is DTC P2647 indicated?

   YES—Go to step 6.

   NO—Intermittent failure, system is OK at this time. Check for poor connections or loose terminals at the rocker arm oil pressure switch (VTEC oil pressure switch), the rocker arm oil control solenoid (VTEC solenoid valve) and the ECM/PCM. ■

6. Turn the ignition switch OFF.

7. Remove the rocker arm oil pressure switch (VTEC oil pressure switch) (A) and install the special tools as shown, then install the rocker arm oil pressure switch (VTEC oil pressure switch) to the oil pressure gauge adapter (B).

   NOTE: Install the switch in the reverse order of removal with a new O-ring.

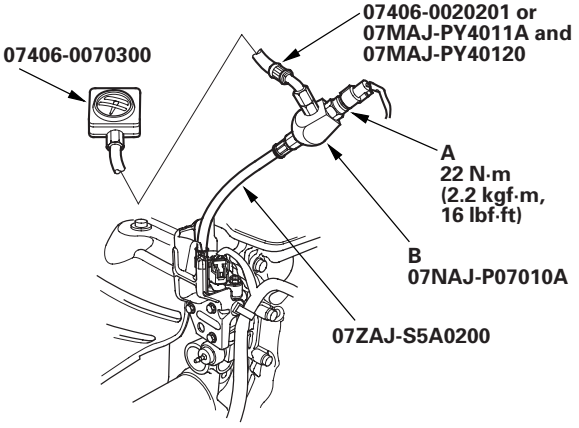

8. Start the engine. Hold the engine speed at 3,000 rpm without load (in Park or neutral) until the radiator fan comes on, then let it idle.

9. Check the oil pressure at engine speed of 1,000 and 2,000 rpm. Keep the measuring time as short as possible (less than 1 minute) because the engine is running without load.

   Is the oil pressure below 49 kPa (0.5 kgf/cm^2, 7 psi)?

   YES—Go to step 10.

   NO—Inspect the rocker arm oil control solenoid (VTEC solenoid valve) (see page 11-323). ■

10. Turn the ignition switch OFF.

11. Disconnect the rocker arm oil pressure switch (VTEC oil pressure switch) 2P connector.

(cont'd)

DTC Troubleshooting (cont'd)

12. Check for continuity between rocker arm oil pressure switch (VTEC oil pressure switch) 2P connector terminals No. 1 and No. 2.

ROCKER ARM OIL PRESSURE SWITCH (VTEC OIL PRESSURE SWITCH) 2P CONNECTOR

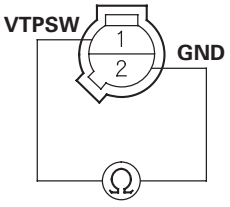

Terminal side of male terminals

Is there continuity?

YES—Go to step 13.

NO—Replace the rocker arm oil pressure switch (VTEC oil pressure switch) (see page 11-324). ■

13. Turn the ignition switch OFF.

14. Measure voltage between rocker arm oil pressure switch (VTEC oil pressure switch) 2P connector terminal No. 1 and body ground.

ROCKER ARM OIL PRESSURE SWITCH (VTEC OIL PRESSURE SWITCH) 2P CONNECTOR

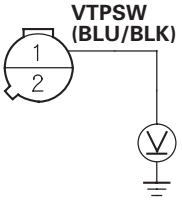

Wire side of female terminals

Is there battery voltage?

YES—Repair open in the wire between the rocker arm oil pressure switch (VTEC oil pressure switch) and G101. ■

NO—Go to step 15.

15. Measure voltage between ECM/PCM connector terminal B9 and body ground.

ECM/PCM CONNECTOR B (24P)

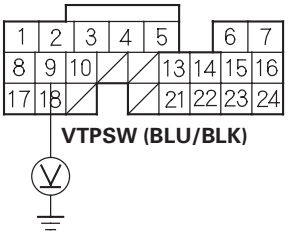

Wire side of female terminals

Is there battery voltage?

YES—Repair open in the wire between the ECM/PCM (B9) and the rocker arm oil pressure switch (VTEC oil pressure switch). ■

NO—Update the ECM/PCM if it does not have the latest software, or substitute a known-good ECM/PCM (see page 11-6), then recheck. If the symptom/indication goes away with a known-good ECM/PCM, replace the original ECM/PCM (see page 11-284). ■

DTC P2647: Rocker Arm Oil Pressure Switch (VTEC Oil Pressure Switch) Circuit High Voltage (2005-2006 models)

1. Check the engine oil level.

   Is the level OK?

   YES—Go to step 2.

   NO—Adjust the engine oil to the proper level, then go to step 14.

2. Turn the ignition switch ON (II).

3. Clear the DTC with the HDS.

4. Do the VTEC TEST in the INSPECTION MENU with the HDS.

   Is the result OK?

   YES—Intermittent failure, sytem is OK at this time. Check for poor connections or loose terminals at the rocker arm oil pressure switch (VTEC oil pressure switch) and the ECM/PCM.■

   NO—Go to step 5.

5. Check the result of step 4.

   - Rocker Arm Oil Pressure Switch (VTEC Oil Pressure Switch) Failure
   - Rocker Arm Oil Pressure Switch (VTEC Oil Pressure Switch) Open
   - Rocker Arm Oil Pressure Switch (VTEC Oil Pressure Switch) SIG Line Open
   - Rocker Arm Oil Pressure Switch (VTEC Oil Pressure Switch) GND Line Open

   Is the test result one of the conditions above?

   YES—Go to step 6.

   NO—Check for poor connections or loose terminals at the rocker arm oil pressure switch (VTEC oil pressure switch). If it is OK, replace the rocker arm oil control solenoid (VTEC solenoid valve) (see page 11-324), then go to step 14.

6. Turn the ignition switch OFF.

7. Disconnect the rocker arm oil pressure switch (VTEC oil pressure switch) 2P connector.

8. Check for continuity between rocker arm oil pressure switch (VTEC oil pressure switch) 2P connector terminals No. 1 and No. 2.

   ROCKER ARM OIL PRESSURE SWITCH (VTEC OIL PRESSURE SWITCH) 2P CONNECTOR

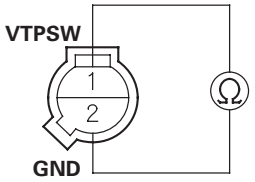

   Terminal side of male terminals

   Is there continuity?

   YES—Go to step 9.

   NO—Replace the rocker arm oil pressure switch (VTEC oil pressure switch) (see page 11-324), then go to step 13.

9. Turn the ignition switch ON (II).

10. Measure voltage between rocker arm oil pressure switch (VTEC oil pressure switch) terminal No. 1 and body ground.

    ROCKER ARM OIL PRESSURE SWITCH (VTEC OIL PRESSURE SWITCH) 2P CONNECTOR

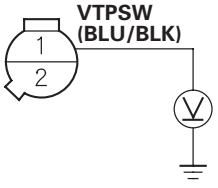

    Wire side of female terminals

    Is there battery voltage?

    YES—Repair open in the wire between the rocker arm oil pressure switch (VTEC oil pressure switch) and G101, then go to step 13.

    NO—Go to step 11.

(cont'd)

DTC Troubleshooting (cont'd)

11. Measure voltage between ECM/PCM connector terminal B11 and body ground.

ECM/PCM CONNECTOR B (24P)

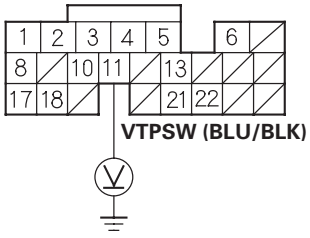

Wire side of female terminals

Is there battery voltage?

YES—Repair open in the wire between the ECM/PCM (B11) and the rocker arm oil pressure switch (VTEC oil pressure switch), then go to step 12.

NO—Go to step 19.

12. Turn the ignition switch OFF.

13. Reconnect the rocker arm oil pressure switch (VTEC oil pressure switch) 2P connector.

14. Turn the ignition switch ON (II).

15. Reset the ECM/PCM with the HDS.

16. Do the ECM/PCM idle learn procedure (see page 11-349).

17. Check for Temporary DTCs or DTCs with the HDS.

Are any Temporary DTCs or DTCs indicated?

YES—If DTC P2647 is indicated, check for poor connections or loose terminals at the rocker arm oil pressure switch (VTEC oil pressure switch) and the ECM/PCM, then go to step 1. If any other Temporary DTCs or DTCs are indicated, go to the indicated DTC's troubleshooting.

NO—Go to step 18.

18. Monitor the OBD STATUS for DTC P2647 in the DTCs MENU with the HDS.

Does the screen indicate PASSED?

YES—Troubleshooting is complete. ■

NO—If the screen indicates FAILED, go to step 1 and recheck. If the screen indicates NOT COMPLETED, go to step 16, and recheck.

19. Update the ECM/PCM if it does not have the latest software, or substitute a known-good ECM/PCM (see page 11-6).

20. Check for Temporary DTCs or DTCs with the HDS.

Are any Temporary DTCs or DTCs indicated?

YES—If DTC P2647 is indicated, check for poor connections or loose terminals at the rocker arm oil pressure switch (VTEC oil pressure switch) and the ECM/PCM, then go to step 1. If any other Temporary DTCs or DTCs are indicated, go to the indicated DTC's troubleshooting.

NO—If the ECM/PCM was updated, troubleshooting is complete. If the ECM/PCM was substituted, replace the original ECM/PCM (see page 11-284). ■

DTC P2648: Rocker Arm Oil Control Solenoid (VTEC Solenoid Valve) Circuit Low Voltage (2005-2006 models)

1. Turn the ignition switch ON (II).

2. Clear the DTC with the HDS.

3. Do the VTEC TEST in the INSPECTION MENU with the HDS.

   Is the result OK?

   YES—Intermittent failure, system is OK at this time. Check for poor connections or loose terminals at the rocker arm oil control solenoid (VTEC solenoid valve) and the ECM/PCM. ■

   NO—Go to step 4.

4. Turn the ignition switch OFF.

5. Disconnect the rocker arm oil control solenoid (VTEC solenoid valve) 2P connector.

6. Measure resistance between rocker arm oil control solenoid (VTEC solenoid valve) 2P connector terminals No. 1 and No. 2.

ROCKER ARM OIL CONTROL SOLENOID (VTEC SOLENOID VALVE) 2P CONNECTOR

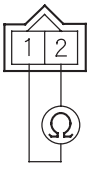

Terminal side of male terminals

Is there 14—30 Ω at room temperature?

YES—Go to step 7.

NO—Go to step 10.

7. Jump the SCS line with the HDS.

8. Disconnect ECM/PCM connector B (24P).

9. Check for continuity between ECM/PCM connector terminal B6 and body ground.

ECM/PCM CONNECTOR B (24P)

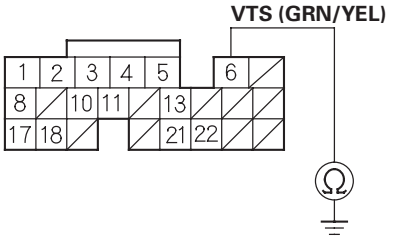

Wire side of female terminals

Is there continuity?

YES—Repair short in the wire between the ECM/PCM (B6) and the rocker arm oil control solenoid (VTEC solenoid valve), then go to step 11.

NO—Go to step 18.

10. Replace the rocker arm oil control solenoid (VTEC solenoid valve) (see page 11-324).

11. Reconnect all connectors.

12. Turn the ignition switch ON (II).

13. Reset the ECM/PCM with the HDS.

14. Do the ECM/PCM idle learn procedure (see page 11-349).

15. Do the VTEC TEST in the INSPECTION MENU with the HDS.

16. Check for Temporary DTCs or DTCs with the HDS.

    Are any Temporary DTCs or DTCs indicated?

    YES—If DTC P2648 is indicated, check for poor connections or loose terminals at the rocker arm oil control solenoid (VTEC solenoid valve) and the ECM/PCM, then go to step 1. If any other Temporary DTCs or DTCs are indicated, go to the indicated DTC's troubleshooting.

    NO—Go to step 17.

(cont'd)

DTC Troubleshooting (cont'd)

17. Monitor the OBD STATUS for DTC P2648 in the DTCs MENU with the HDS.

    Does the screen indicate PASSED?

    YES—Troubleshooting is complete. ■

    NO—If the screen indicates FAILED, go to step 1 and recheck. If the screen indicates NOT COMPLETED, go to step 15 and recheck.

18. Update the ECM/PCM if it does not have the latest software, or substitute a known-good ECM/PCM (see page 11-6).

19. Do the VTEC TEST in the INSPECTION MENU with the HDS.

20. Check for Temporary DTCs or DTCs with the HDS.

    Are any Temporary DTCs or DTCs indicated?

    YES—If DTC P2648 is indicated, check for poor connections or loose terminals at the rocker arm oil control solenoid (VTEC solenoid valve) and the ECM/PCM, then go to step 1. If any other Temporary DTCs or DTCs are indicated, go to the indicated DTC's troubleshooting.

    NO—If the ECM/PCM was updated, troubleshooting is complete. If the ECM/PCM was substituted, replace the original ECM/PCM (see page 11-284). ■

DTC P2649: Rocker Arm Oil Control Solenoid (VTEC Solenoid Valve) Circuit High Voltage (2005-2006 models)

1. Turn the ignition switch ON (II).

2. Clear the DTC with the HDS.

3. Start the engine. Hold the engine speed at 3,000 rpm without load (in Park or neutral) until the radiator fan comes on, then let it idle.

4. Check for Temporary DTCs or DTCs with the HDS.

   Is DTC P2649 indicated?

   YES—Go to step 5.

   NO—Intermittent failure, system is OK at this time. Check for poor connections or loose terminals at the rocker arm oil control solenoid (VTEC solenoid valve) and the ECM/PCM. ■

5. Turn the ignition switch OFF.

6. Disconnect the rocker arm oil control solenoid (VTEC solenoid valve) 2P connector.

7. Measure resistance between rocker arm oil control solenoid (VTEC solenoid valve) 2P connector terminals No. 1 and No. 2.

ROCKER ARM OIL CONTROL SOLENOID (VTEC SOLENOID VALVE) 2P CONNECTOR

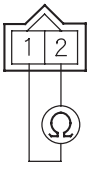

Terminal side of male terminals

Is there 14—30 Ω at room temperature?

YES—Go to step 8.

NO—Go to step 13.

8. Check for continuity between rocker arm oil control solenoid (VTEC solenoid valve) 2P connector terminal No. 1 and body ground.

ROCKER ARM OIL CONTROL SOLENOID (VTEC SOLENOID VALVE) 2P CONNECTOR

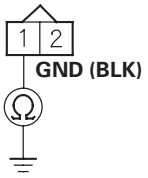

Wire side of female terminals

Is there continuity?

YES—Go to step 9.

NO—Repair open in the wire between the rocker arm oil control solenoid (VTEC solenoid valve) and G101, then go to step 14.

9. Jump the SCS line with the HDS.

10. Disconnect ECM/PCM connector B (24P).

11. Connect rocker arm oil control solenoid (VTEC solenoid valve) 2P connector terminal No. 2 to body ground with a jumper wire.

ROCKER ARM OIL CONTROL SOLENOID (VTEC SOLENOID VALVE) 2P CONNECTOR

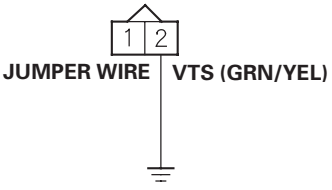

Wire side of female terminals

(cont'd)

DTC Troubleshooting (cont'd)

12. Check for continuity between ECM/PCM connector terminal B6 and body ground.

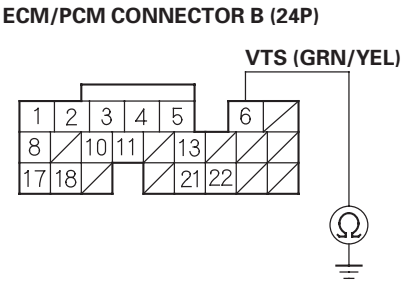

Wire side of female terminals

Is there continuity?

YES—Go to step 20

NO—Repair open in the wire between the ECM/PCM (B6) and the rocker arm oil control solenoid (VTEC solenoid valve), then go to step 14.

13. Replace the rocker arm oil control solenoid (VTEC solenoid valve) (see page 11-324).

14. Reconnect all connectors.

15. Turn the ignition switch ON (II).

16. Reset the ECM/PCM with the HDS.

17. Do the ECM/PCM idle learn procedure (see page 11-349).

18. Check for Temporary DTCs or DTCs with the HDS.

Are any Temporary DTCs or DTCs indicated?

YES—If DTC P2649 is indicated, check for poor connections or loose terminals at the rocker arm oil control solenoid (VTEC solenoid valve) and the ECM/PCM, then go to step 1. If any other Temporary DTCs or DTCs are indicated, go to the indicated DTC's troubleshooting.

NO—Go to step 19.

19. Monitor the OBD STATUS for DTC P2649 in the DTCs MENU with the HDS.

Does the screen indicate PASSED?

YES—Troubleshooting is complete. ■

NO—If the screen indicates FAILED, go to step 1 and recheck. If the screen indicates NOT COMPLETED, go to step 17 and recheck.

20. Update the ECM/PCM if it does not have the latest software, or substitute a known-good ECM/PCM (see page 11-6).

21. Check for Temporary DTCs or DTCs with the HDS.

Are any Temporary DTCs or DTCs indicated?

YES—If DTC P2647 is indicated, check for poor connections or loose terminals at the rocker arm oil control solenoid (VTEC solenoid valve) and the ECM/PCM, then go to step 1. If any other Temporary DTCs or DTCs are indicated, go to the indicated DTC's troubleshooting.

NO—If the ECM/PCM was updated, troubleshooting is complete. If the ECM/PCM was substituted, replace the original ECM/PCM (see page 11-284). ■

VTC Oil Control Solenoid Valve Removal/Test/Installation

1. Disconnect the VTC oil control solenoid valve 2P connector.

2. Remove the bolt (A) and the VTC oil control solenoid valve (B).

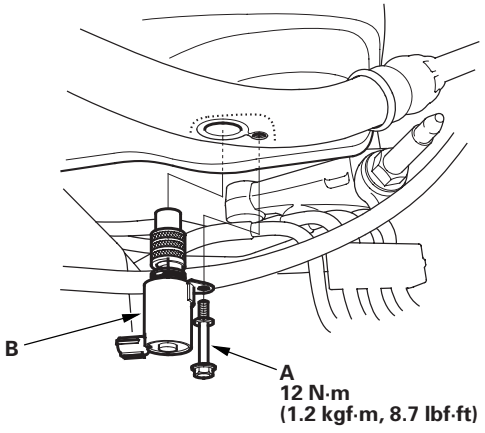

3. Check the VTC oil control solenoid valve strainer for clogging. If the strainer is clogged, replace the VTC oil control solenoid valve.

4. Note the amount of valve opening by observing the position of the piston shoulder (A) through the valve retard drain port. If you see the shoulder of the piston, the valve is open and must be replaced.

Close

One Filter Screen Valve

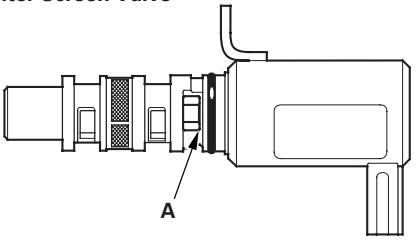

Three Filter Screen Valve

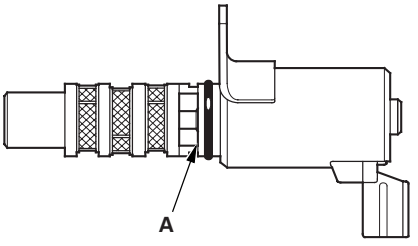

Open

One Filter Screen Valve

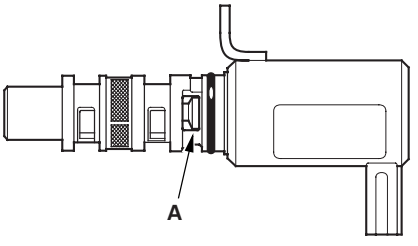

Three Filter Screen Valve

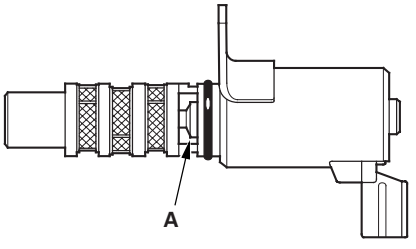

(cont'd)

VTC Oil Control Solenoid Valve Removal/Test/Installation (cont'd)

5. Connect the battery positive terminal to VTC oil control solenoid valve 2P connector terminal No. 2.

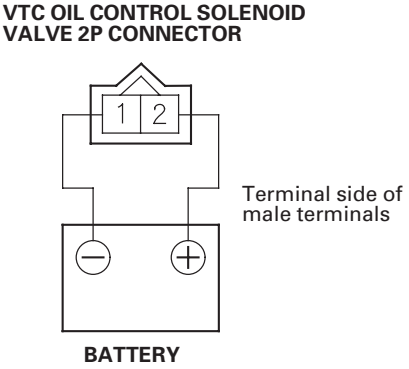

6. Connect the battery nagative terminal to VTC oil control solenoid valve 2P connector terminal No. 1. Appearance of inner valve (A) in the port should be at least 1.2 mm (1/16 in.). If the inner valve does not open, replace it; then go to step 7.

Open

One Filter Screen Valve

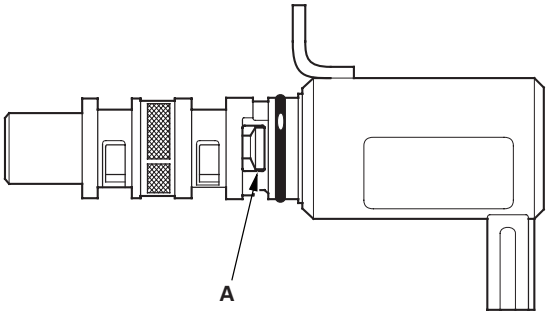

Three Filter Screen Valve

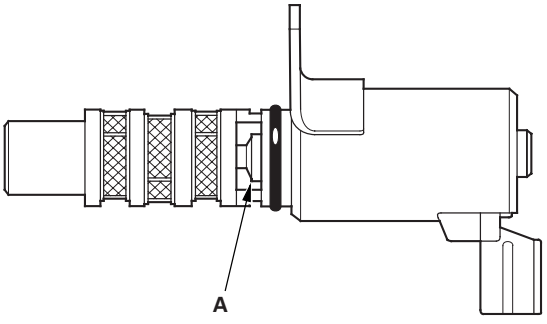

7. Replace the VTC valve O-ring (A).

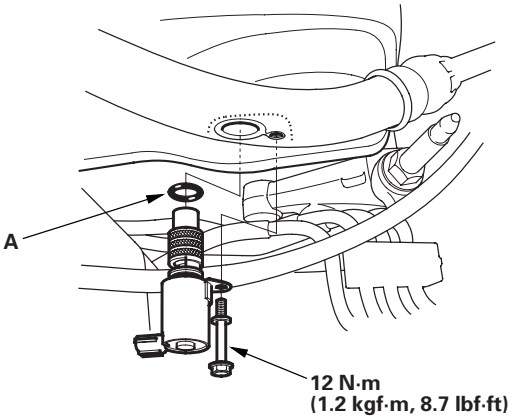

8. Coat a new O-ring (A) with engine oil, then install it.

9. Clean and dry the mating surface of the valve.

10. Install the valve.

NOTE: Do not install the valve while wearing cloth fibrous gloves. Be careful not to contaminate the cylinder head opening.

CMP Sensor A Replacement

1. Remove the air cleaner (see page 11-407).
2. Disconnect CMP sensor A 3P connector.
3. Remove CMP sensor A from the intake camshaft side of the cylinder head.

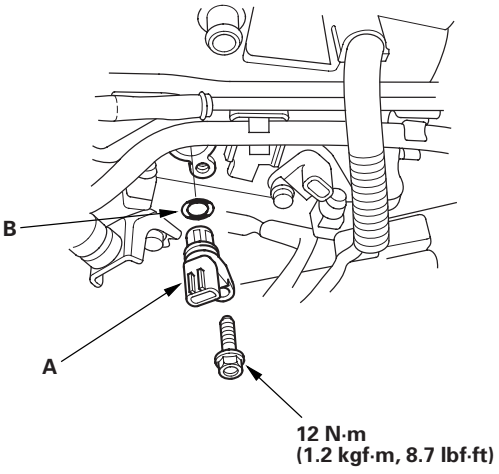

4. Install CMP sensor A in the reverse order of removal with a new O-ring (B).

Rocker Arm Oil Control Solenoid (VTEC Solenoid Valve) Inspection

1. Disconnect the rocker arm oil control solenoid (VTEC solenoid valve) 2P connector.
2. Measure resistance between rocker arm oil control solenoid (VTEC solenoid valve) 2P connector terminals No. 1 and No. 2.

   Resistance: 14—30 Ω

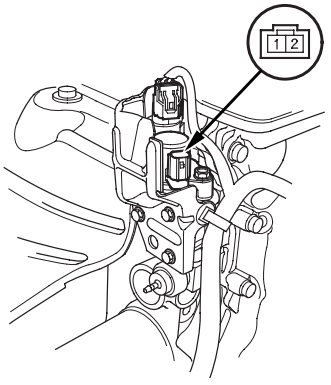

3. If the resistance is within specifications, remove the cover (A), then remove the rocker arm oil control solenoid (VTEC solenoid valve) assembly (B) from the cylinder head, and check the rocker arm oil control solenoid (VTEC solenoid valve) filter (C) for clogging. If it is clogged, replace the solenoid valve filter, the engine oil filter, and the engine oil.

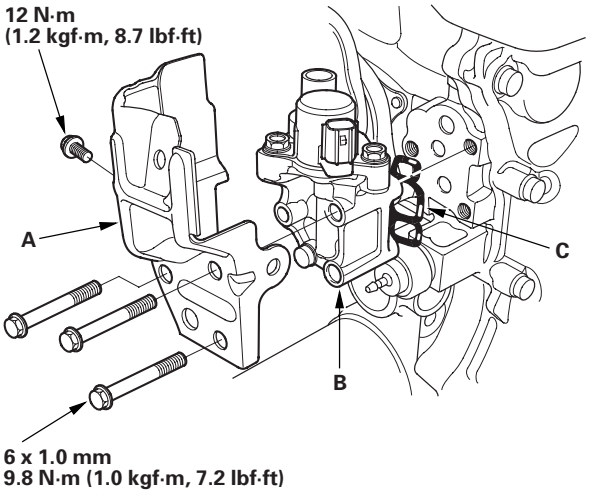

Rocker Arm Oil Control Solenoid (VTEC Solenoid Valve) Assembly Removal/Installation

1. Disconnect the rocker arm oil control solenoid (VTEC solenoid valve) connector, the rocker arm oil pressure switch (VTEC oil pressure switch) connector and the bolts (A).

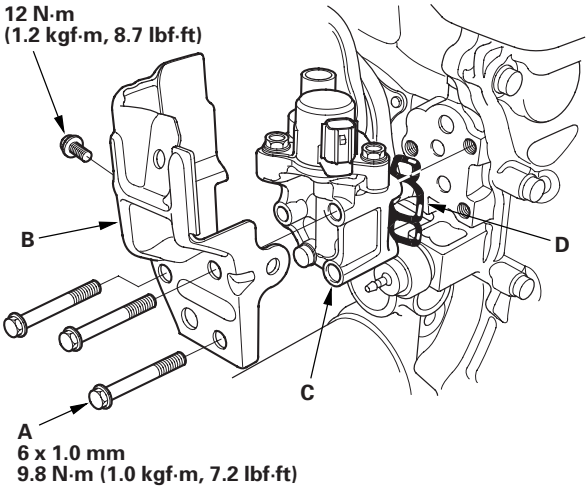

2. Remove the cover (B), and the rocker arm oil control solenoid (VTEC solenoid valve) assembly (C).

3. Install the valve in the reverse order of removal with a new solenoid valve filter (D).

Rocker Arm Oil Pressure Switch (VTEC Oil Pressure Switch) Removal/Installation

1. Remove the rocker arm oil control solenoid (VTEC solenoid valve) assembly (see page 11-324).

2. Remove the rocker arm oil pressure switch (VTEC oil pressure switch) (A).

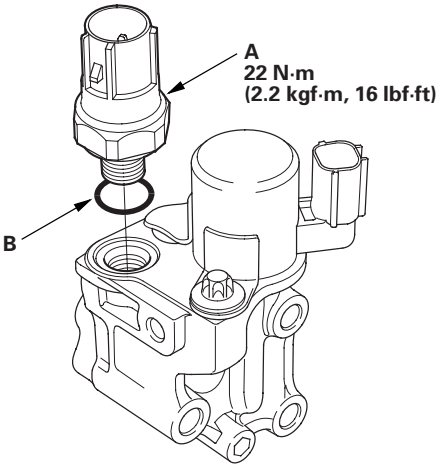

3. Install the switch in the reverse order of removal with a new O-ring (B).

Component Location Index

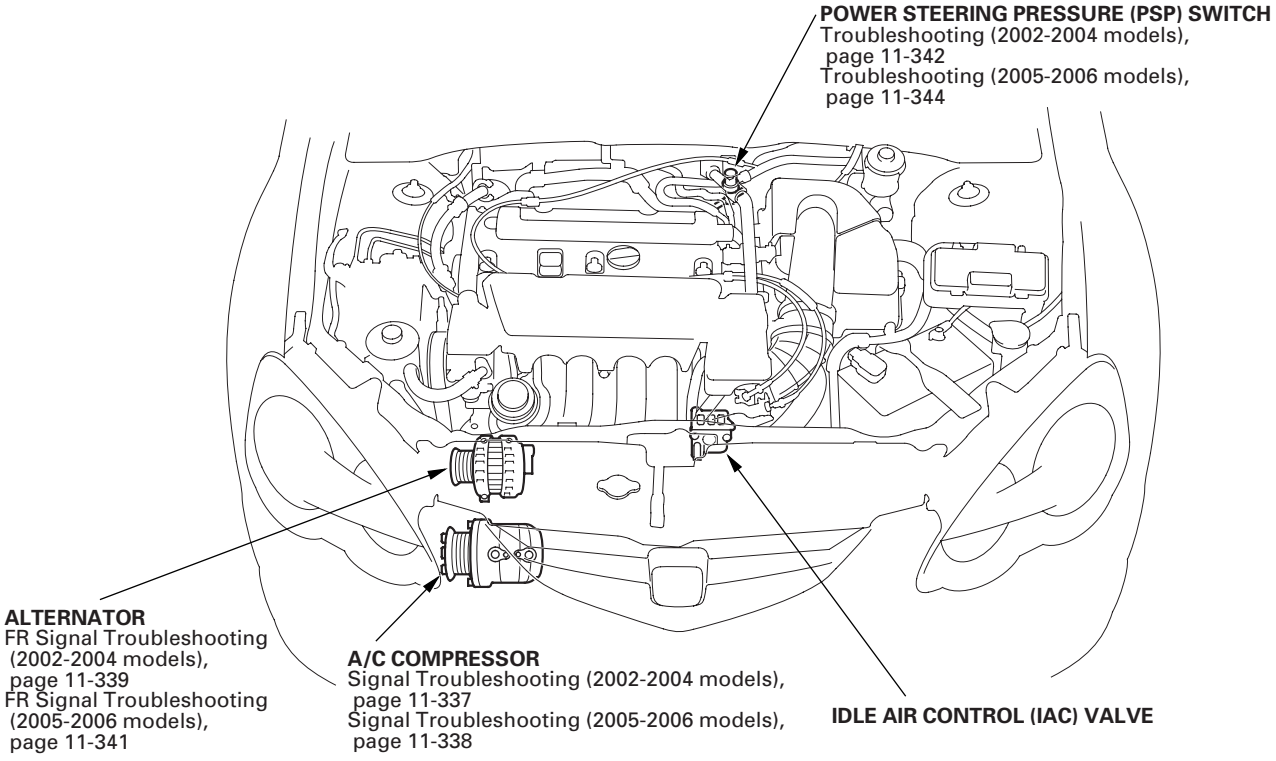

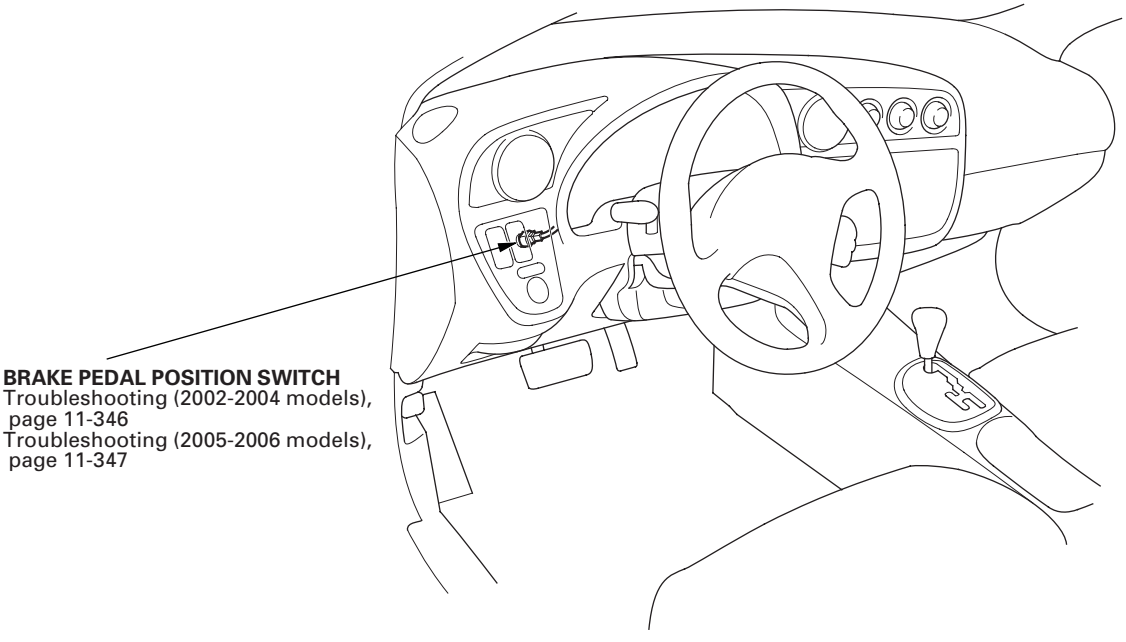

*: This illustration shows the 2002-2004 K20A3 engine model; the other models are similar.

DTC Troubleshooting

DTC P0505: Idle Control System Malfunction (2002-2003 models)

NOTE:
- Information marked with ＊1 applies to K20A3 engine; ＊2 applies to K20A2 engine.
- If DTC P1519 is stored at the same time as DTC P0505, troubleshooting DTC P1519 first, then recheck for DTC P0505.

1. Start the engine. Hold the engine speed at 3,000 rpm without load (in Park or neutral) until the radiator fan comes on, then let it idle.

2. Check the engine speed at idle without load conditions: headlights, blower fan, rear defogger, radiator fan, and air conditioner off.

   Is the engine running at 650[*1] *(700)*[*2] *± 50 rpm?*

   YES—Intermittent failure, system is OK at this time.■

   NO—If the idle speed is less than 600[*1] (650)[*2] rpm, go to step 3; if it's 700[*1] (750)[*2] rpm or higher, go to step 4.

3. Disconnect the idle air control (IAC) valve 3P connector.

   Does the engine speed increase or fluctuate?

   YES—Check the idle speed with a different load condition (electrical, A/C, gear position, P/S, etc.) (see page 11-348). If it's out of specification, replace the IAC valve (see page 11-412).■

   NO—Replace the IAC valve (see page 11-412).■

4. Turn the ignition switch OFF.

5. Remove the air intake duct from the throttle body.

6. Start the engine, and let it idle.

7. Put your fingers on the lower port (A) in the throttle body.

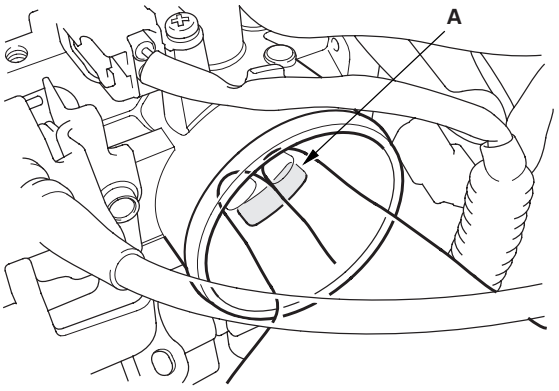

   Does the engine speed drop below 700[*1] *(750)*[*2] *rpm?*

   YES—Check the idle speed with a different load condition (electrical, A/C, gear position, P/S, etc.) (see page 11-348). If it's out of specification, replace the IAC valve (see page 11-412).■

   NO—Check for vacuum leaks at these parts.■

   - PCV valve
   - PCV hose
   - EVAP canister purge valve
   - Intake manifold
   - Throttle body
   - Brake booster hose
   - Intake air bypass control thermal valve

DTC P0506: Idle Control System RPM Lower Than Expected (2004 model)

NOTE:
- If DTC P0511 is stored at the same time as DTC P0506, troubleshoot DTC P0511 first, then recheck for DTC P0506.
- Information marked with ＊1 applies to K20A3 engine; ＊2 applies to K20A2 engine.

1. Start the engine. Hold the engine speed at 3,000 rpm without load (in Park or neutral) until the radiator fan comes on, then let it idle.

2. Check the engine speed at idle without load conditions: headlights, blower fan, rear defogger, radiator fan, and air conditioner off.

   Is the engine running at 650[*1] *(700)*[*2] *± 50 rpm?*

   YES—Intermittent failure, system is OK at this time.■

   NO—Go to step 3.

3. Turn the ignition switch OFF.

4. Disconnect the IAC valve 3P connector.

5. Start the engine, and let it idle.

6. Check the engine speed at idle without load conditions: headlights, blower fan, rear defogger, and air conditioner off.

   Does the engine speed increase or fluctuate?

   YES—Check the idle speed with a different load condition (electrical, A/C, gear position, P/S, etc.) (see page 11-348). If it's out of specification, replace the IAC valve (see page 11-412).■

   NO—Replace the IAC valve (see page 11-412).■

DTC Troubleshooting (cont'd)

DTC P0506: Idle Control System RPM Lower Than Expected
(2005-2006 models)

1. Turn the ignition switch ON (II).

2. Clear the DTC with the HDS.

3. Start the engine, Hold the engine speed at 3,000 rpm without load (in Park or neutral) until the radiator fan comes on, then let it idle.

4. Check for these conditions in the DATA LIST with the HDS.

   - Engine coolant temperature above 158 °F (70 °C)
   - Intake air temperature above 32 °F (0 °C)
   - Vehicle speed is 0 mph (0 km/h)
   - ST FUEL TRIM between 0.69 and 1.47
   - FSS is CLOSED

5. Monitor the OBD STATUS for DTC P0506 in the DTCs MENU with the HDS.

   Does the screen indicate FAILED?

   YES—Go to step 6.

   NO—If the screen indicates PASSED, go to step 15. If the screen indicates EXECUTING, let the engine idle until a result comes on. If the screen indicates OUT OF CONDITION, go to step 4 and recheck.

6. Remove the air intake duct from the throttle body.

7. Check for dirt, carbon, or damage in the throttle bore.

   Is there dirt, carbon, or damage in the throttle bore?

   YES—If there is dirt or carbon, clean the throttle body (see page 11-403), and also check for damage at the air cleaner element (see page 11-407), then go to step 9. If there is damage in the throttle bore, go to step 8.

   NO—Check the A/C system or power steering system, then go to step 17.

8. Replace the throttle body (see page 11-410).

9. Reset the ECM/PCM with the HDS.

10. Do the ECM/PCM idle learn procedure (see page 11-349).

11. Start the engine, Hold the engine speed at 3,000 rpm without load (in Park or neutral) until the radiator fan comes on, then let it idle.

12. Check for these conditions in the DATA LIST with the HDS.

    - Engine coolant temperature above 158 °F (70 °C)
    - Intake air temperature above 32 °F (0 °C)
    - Vehicle speed is 0 mph (0 km/h)
    - ST FUEL TRIM between 0.69 and 1.47
    - FSS is CLOSED

13. Check for Temporary DTCs or DTCs with the HDS.

    Are any Temporary DTCs or DTCs indicated?

    YES—If DTC P0506 is indicated, go to step 1 and recheck. If any other Temporary DTCs or DTCs are indicated, go to the indicated DTC's troubleshooting.

    NO—Go to step 14.

14. Monitor the OBD STATUS for DTC P0506 in the DTCs MENU with the HDS.

    Does the screen indicate PASSED?

    YES—Troubleshooting is complete. ■

    NO—If the screen indicates FAILED, go to step 1 and recheck. If the screen indicates EXECUTING, let the engine idle until a result comes on. If the screen indicates OUT OF CONDITION, go to step 12 and recheck.

15. Remove the air intake duct from the throttle body.

16. Check for dirt, carbon, or damage in the throttle bore.

    Is there dirt, carbon, or damage in the throttle bore?

    YES—If there is dirt or carbon, clean the throttle body (see page 11-403), and also check for damage at the air cleaner element (see page 11-407), then go to step 9. If there is damage in the throttle bore, go to step 8.

    NO—Go to step 17.

17. Recheck with different load conditions (turn on the headlights, blower motor, rear window defogger and/or A/C, changing the gear position, etc.)

18. Monitor the OBD STATUS for DTC P0506 in the DTCs MENU with the HDS.

    Does the screen indicate PASSED?

    YES—Intermittent failure, system is OK at this time. ■

    NO—If the screen indicates FAILED, check the A/C system and/or power steering system, then go to step 1 and recheck. If the screen indicates EXECUTING, let the engine idle until a result comes on. If the screen indicates OUT OF CONDITION, go to step 17 and recheck.

DTC Troubleshooting (cont'd)

DTC P0507: Idle Control System RPM Higher Than Expected
(2004 model)

NOTE:
- If DTC P0511 is stored at the same time as DTC P0507, troubleshoot DTC P0511 first; then recheck for DTC P0507.
- Information marked with ＊1 applies to K20A3 engine; ＊2 applies to K20A2 engine.

1. Start the engine. Hold the engine speed at 3,000 rpm without load (in Park or neutral) until the radiator fan comes on, then let it idle.

2. Check the engine speed at idle without load conditions: headlights, blower fan, rear defogger, and air conditioner off.

   *Is the engine running at 650*1 (700)*2±50 rpm?*

   YES—Intermittent failure, system is OK at this time.■

   NO—Go to step 3.

3. Turn the ignition switch OFF.

4. Remove the air cleaner from the throttle body (see page 11-407).

5. Start the engine, and let it idle.

6. Put your fingers on the lower port (A) in the throttle body.

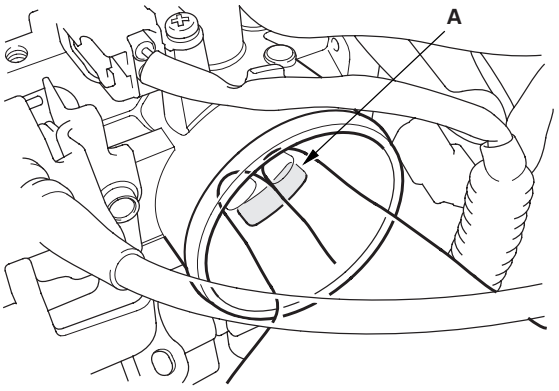

   *Does the engine speed drop below 700*1 (750)*2 rpm?*

   YES—Check the idle speed with a different load condition (electrical, A/C, gear position, P/S etc.) (see page 11-348). If it's out of specification, replace the IAC valve (see page 11-412).■

   NO—Check for vacuum leaks at these parts.■

   - PCV valve
   - PCV hose
   - EVAP canister purge valve
   - Throttle body
   - Intake manifold
   - Brake booster hose
   - Intake air bypass control thermal valve

DTC P0507: Idle Control System RPM Higher Than Expected (2005-2006 models)

1. Turn the ignition switch ON (II).

2. Clear the DTC with the HDS.

3. Start the engine, Hold the engine speed at 3,000 rpm without load (in Park or neutral) until the radiator fan comes on, then let it idle.

4. Monitor the OBD STATUS for DTC P0506 in the DTCs MENU with the HDS.

   Does the screen indicate FAILED ?

   YES—Go to step 5.

   NO—If the screen indicates PASSED, intermittent failure, system is OK at this time. If the screen indicates EXECUTING, let the engine idle until a result comes on. If the screen indicates OUT OF CONDITION, recheck with different load conditions (electrical, A/C, gear position, etc.), then go to step 3.

5. Check for vacuum leaks at these parts:

   - PCV valve
   - PCV hose
   - EVAP canister purge valve
   - Throttle body
   - Intake manifold
   - Brake booster hose
   - Intake air bypass control thermal valve

   Are there any leaks?

   YES—Repair or replace the leaking part(s), then go to step 6.

   NO—Go to step 6.

6. Turn the ignition switch ON (II).

7. Reset the ECM/PCM with the HDS.

8. Do the ECM/PCM idle learn procedure (see page 11-349).

9. Start the engine. Hold the engine speed at 3,000 rpm without load (in Park or neutral) until the radiator fan comes on, then let it idle.

10. Check for Temporary DTCs or DTCs with the HDS.

    Are any Temporary DTCs or DTCs indicated?

    YES—If DTC P0507 is indicated, check for poor connections or loose terminals at the throttle body, and the ECM/PCM, then go to step 1. If any other Temporary DTCs or DTCs are indicated, go to the indicated DTC's troubleshooting.

    NO—Go to step 11.

11. Monitor the OBD STATUS for DTC P0507 in the DTCs MENU with the HDS.

    Does the screen indicate PASSED?

    YES—Troubleshooting is complete. ■

    NO—If the screen indicates FAILED, check for poor connections or loose terminals at the throttle body, and the ECM/PCM, then go to step 1. If the screen indicates EXECUTING, let the engine idle until a result comes on. If the screen indicates OUT OF CONDITION, recheck with different load conditions (electrical, A/C, gear position, etc.), then go to step 9.

DTC Troubleshooting (cont'd)

DTC P0511: IAC Valve Circuit Malfunction (2004 model)

DTC P1519: IAC Valve Circuit Malfunction (2002-2003 models)

NOTE:
- Information marked with an asterisk (*) applies to 2004 model.
- Information marked with double asterisk (**) applies to 2002-2003 models.

1. Reset the ECM/PCM (see page 11-4).

2. Turn the ignition switch ON (II).

   Is DTC P0511 (P1519)** indicated?*

   YES—Go to step 3.

   NO—Intermittent failure, system is OK at this time. Check for poor connections or loose terminals the IAC valve and the ECM/PCM. ■

3. Turn the ignition switch OFF.

4. Disconnect the IAC valve 3P connector.

5. Turn the ignition switch ON (II).

6. Measure voltage between IAC valve 3P connector terminal No. 2 and body ground.

IAC VALVE 3P CONNECTOR

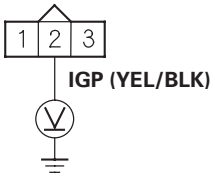

Wire side of female terminals

Is there battery voltage?

YES—Go to step 7.

NO—Repair open in the wire between the IAC valve and the PGM-FI main relay. ■

7. Turn the ignition switch OFF.

8. Check for continuity between body ground and IAC valve 3P connector terminal No. 1.

IAC VALVE 3P CONNECTOR

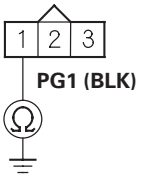

Wire side of female terminals

Is there continuity?

YES—Go to step 9.

NO—Repair open in the wire between the IAC valve and G101. ■

9. Disconnect ECM/PCM connector A (31P).

10. Check for continuity between body ground and ECM/PCM connector terminal A12.

ECM/PCM CONNECTOR A (31P)

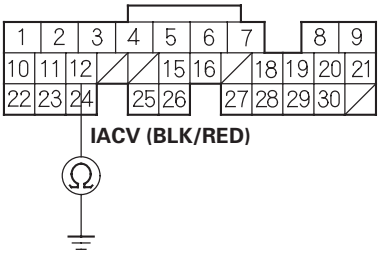

Wire side of female terminals

Is there continuity?

YES—Repair short in the wire between the IAC valve and the ECM/PCM (A12). ■

NO—Go to step 11.

11. Connect IAC valve 3P connector terminal No. 3 and body ground with a jumper wire.

IAC VALVE 3P CONNECTOR

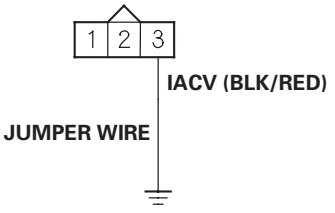

Wire side of female terminals

12. Check for continuity between ECM/PCM connector terminal A12 and body ground.

ECM/PCM CONNECTOR A (31P)

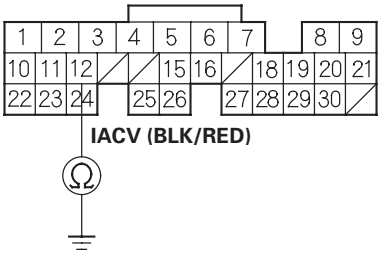

Wire side of female terminals

Is there continuity?

YES—Go to step 13.

NO—Repair open in the wire between the IAC valve and the ECM/PCM (A12). ■

13. Reconnect the IAC valve 3P connector.

14. Turn the ignition switch ON (II).

15. Measure voltage between body ground and ECM/PCM connector terminal A12.

ECM/PCM CONNECTOR A (31P)

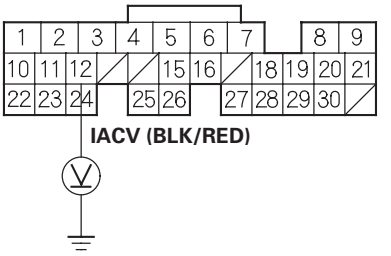

Wire side of female terminals

Is there battery voltage?

YES—Update the ECM/PCM if it does not have the latest software, or substitute a known-good ECM/PCM (see page 11-6), then recheck. If the symptom/indication goes away with a known-good ECM/PCM, replace the original ECM/PCM (see page 11-284). ■

NO—Replace the IAC valve (see page 11-412). ■

DTC Troubleshooting (cont'd)

DTC P0511: IAC Valve Circuit Malfunction (2005-2006 models)

1. Turn the ignition switch ON (II).
2. Clear the DTC with the HDS.
3. Check for Temporary DTCs or DTCs with the HDS.

   Is DTC P0511 indicated?

   YES—Go to step 4.

   NO—Intermittent failure, system is OK at this time. Check for poor connections or loose terminals at the IAC valve and the ECM/PCM. ■

4. Turn the ignition switch OFF.
5. Disconnect the IAC valve 3P connector.
6. Turn the ignition switch ON (II).
7. Measure voltage between IAC valve 3P connector terminal No. 2 and body ground.

IAC VALVE 3P CONNECTOR

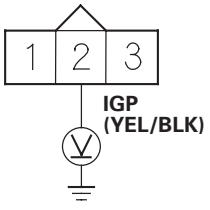

Wire side of female terminals

Is there battery voltage?

YES—Go to step 8.

NO—Repair open in the wire between the IAC valve and PGM-FI main relay 1 (FI MAIN), then go to step 21.

8. Turn the ignition switch OFF.
9. Check for continuity between body ground and IAC valve 3P connector terminal No. 1.

IAC VALVE 3P CONNECTOR

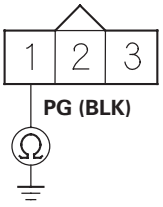

Wire side of female terminals

Is there continuity?

YES—Go to step 10.

NO—Repair open in the wire between the IAC valve and G101, then go to step 21.

10. Turn the ignition switch OFF.
11. Jump the SCS line with the HDS.
12. Disconnect ECM/PCM connector A (31P).
13. Check for continuity between ECM/PCM connector terminal A12 and body ground.

ECM/PCM CONNECTOR A (31P)

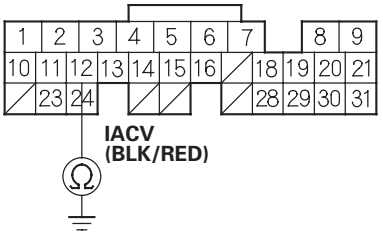

Wire side of female terminals

Is there continuity?

YES—Repair short in the wire between the ECM/PCM (A12) and the IAC valve, then go to step 21.

NO—Go to step 14.

14. Connect IAC valve 3P connector terminal No. 3 to body ground with a jumper wire.

IAC VALVE 3P CONNECTOR

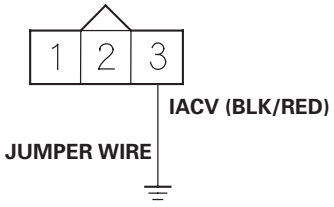

Wire side of female terminals

15. Check for continuity between ECM/PCM connector terminal A12 and body ground.

ECM/PCM CONNECTOR A (31P)

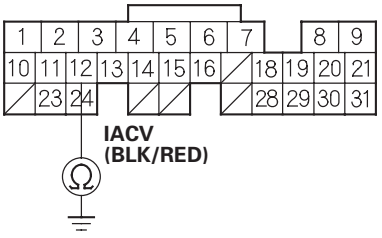

Wire side of female terminals

Is there continuity?

YES—Go to step 16.

NO—Repair open in the wire between the ECM/PCM (A12) and the IAC valve, then go to step 21.

16. Reconnect the IAC valve 3P connector.

17. Turn the ignition switch ON (II).

18. Measure voltage between ECM/PCM connector terminal A12 and body ground.

ECM/PCM CONNECTOR A (31P)

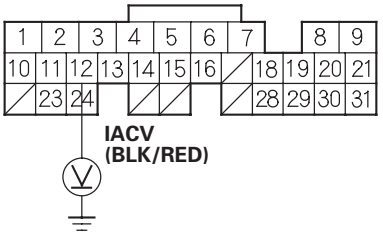

Wire side of female terminals

Is there battery voltage?

YES—Go to step 26.

NO—Go to step 19.

19. Turn the ignition switch OFF.

20. Replace the IAC valve (see page 11-412).

21. Turn the ignition switch ON (II).

22. Reset the ECM/PCM with the HDS.

23. Do the ECM/PCM idle learn procedure (see page 11-349).

24. Check for Temporary DTCs or DTCs with the HDS.

Are any Temporary DTCs or DTCs indicated?

YES—If DTC P0511 is indicated, check for poor connections or loose terminals at the IAC valve and the ECM/PCM, then go to step 1. If any other Temporary DTCs or DTCs are indicated, go to the indicated DTC's troubleshooting.

NO—Go to step 25.

(cont'd)

DTC Troubleshooting (cont'd)

25. Monitor the OBD STATUS for DTC P0511 in the DTCs MENU with the HDS.

    Does the screen indicate PASSED?

    YES—Troubleshooting is complete. ■

    NO—If the screen indicates FAILED, go to step 1 and recheck. If the screen indicates NOT COMPLETED, go to step 23 and recheck.

26. Update the ECM/PCM if it does not have the latest software, or substitute a known-good ECM/PCM (see page 11-6).

27. Check for Temporary DTCs or DTCs with the HDS.

    Are any Temporary DTCs or DTCs indicated?

    YES—If DTC P0511 is indicated, check for poor connections or loose terminals at the IAC valve and the ECM/PCM, then go to step 1. If any other Temporary DTCs or DTCs are indicated, go to the indicated DTC's troubleshooting.

    NO—If the ECM/PCM was updated, troubleshooting is complete. If the ECM/PCM was substituted, replace the original ECM/PCM (see page 11-284). ■

A/C Signal Circuit Troubleshooting

2002-2004 models

1. Turn the ignition switch ON (II).

2. Momentarily connect ECM/PCM connector terminals A24 and E18 with a jumper wire several times.

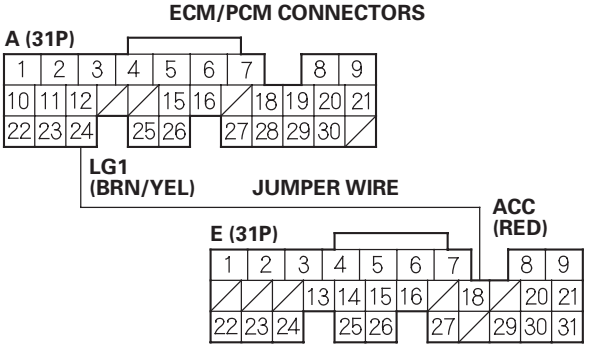

Wire side of female terminals

Is there a clicking noise from the A/C compressor clutch?

YES—Go to step 3.

NO—Go to step 6.

3. Start the engine.

4. Turn the blower switch ON.

5. Turn the A/C switch ON.

Does the A/C operate?

YES—The air conditioning signal is OK. ■

NO—Update the ECM/PCM if it does not have the latest software, or substitute a known-good ECM/PCM (see page 11-6), then recheck. If the symptom/indication goes away with a known-good ECM/PCM, replace the original ECM/PCM (see page 11-284). ■

6. Momentarily connect under-hood fuse/relay box 14P connector terminal No. 10 and body ground with a jumper wire several times.

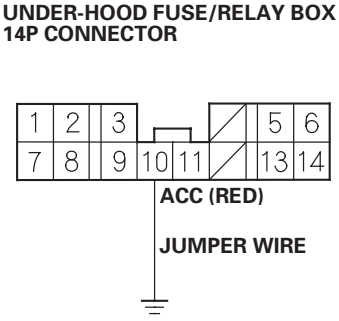

Wire side of female terminals

Is there a clicking noise from the A/C compressor clutch?

YES—Repair open in the wire between the ECM/PCM (E18) and the A/C clutch relay. ■

NO—Check the A/C system for other symptoms. ■

A/C Signal Circuit Troubleshooting (cont'd)

2005-2006 models

1. Start the engine.
2. Turn the blower switch on.
3. Turn the A/C switch on.
4. Check the A/C CLUTCH in the DATA LIST with the HDS.

   Is it ON?

   YES—Go to step 5.

   NO—Do the A/C pressure switch circuit test (see page 21-38). ■

5. Check the A/C system.

   Does the A/C system operate?

   YES—The air conditioning system circuit is OK. ■

   NO—Go to step 6.

6. Turn the ignition switch OFF.
7. Turn the ignition switch ON (II).
8. Activate the A/C CLUTCH in the INSPECTION MENU with the HDS.

   Is there a clicking noise from the A/C compressor clutch?

   YES—Do the A/C system test (see page 21-66). ■

   NO—Go to step 9.

9. Momentarily connect under-hood fuse/relay box 14P connector terminal No. 10 to body ground with a jumper wire several times.

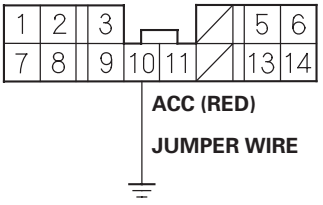

Wire side of female terminals

Is there clicking noise from the A/C compressor clutch?

YES—Repair open in the wire between the ECM/PCM (E18) and the A/C clutch relay. ■

NO—Update the ECM/PCM if it does not have the latest software, or substitute a known-good ECM/PCM (see page 11-6), then recheck. If the symptom/indication goes away with a known-good ECM/PCM, replace the original ECM/PCM (see page 11-284). ■

Alternator FR Signal Circuit Troubleshooting

2002-2004 models

1. Disconnect the alternator 4P connector.

2. Turn the ignition switch ON (II).

3. Measure voltage between ECM/PCM connector terminals A24 and B13.

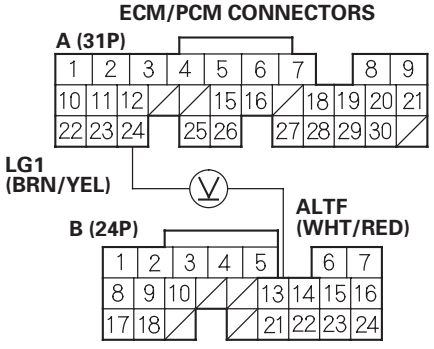

Wire side of female terminals

Is there about 5 V?

YES—Go to step 4.

NO—Go to step 13.

4. Turn the ignition switch OFF.

5. Reconnect the alternator 4P connector.

6. Start the engine. Hold the engine speed at 3,000 rpm without load (in Park or neutral) until the radiator fan comes on, then let it idle.

7. Measure voltage between ECM/PCM connector terminals A24 and B13.

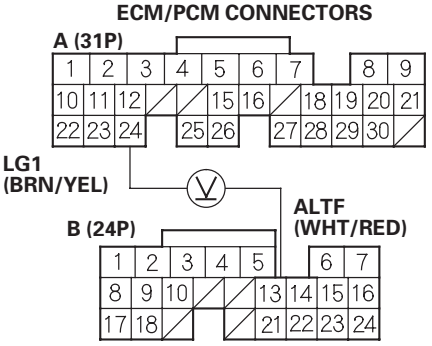

Wire side of female terminals

Does the voltage decrease when the headlights and rear window defogger are turned on?

YES—The alternator signal is OK. ■

NO—Go to step 8.

8. Turn the ignition switch OFF.

9. Disconnect ECM/PCM connector B (24P).

10. Disconnect the alternator 4P connector.

11. Connect alternator 4P connector terminal No. 4 to body ground with a jumper wire.

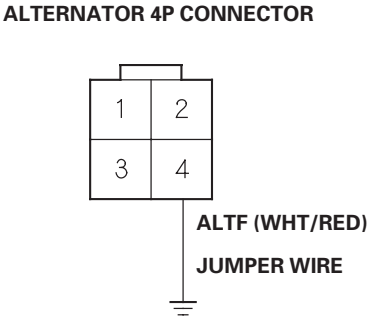

Wire side of female terminals

(cont'd)

Alternator FR Signal Circuit Troubleshooting (cont'd)

12. Check for continuity between body ground and ECM/PCM connector terminal B13.

ECM/PCM CONNECTOR B (24P)

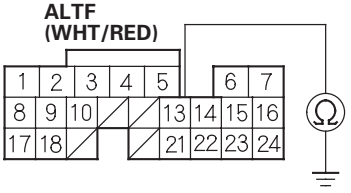

Wire side of female terminals

Is there continuity?

YES—Test the alternator (see page 4-32).■

NO—Repair open in the wire between the ECM/PCM (B13) and the alternator.■

13. Turn the ignition switch OFF.

14. Disconnect ECM/PCM connector B (24P).

15. Check for continuity between body ground and ECM/PCM connector terminal B13.

ECM/PCM CONNECTOR B (24P)

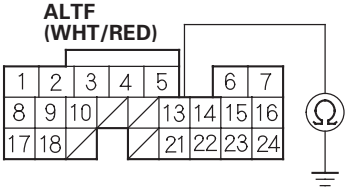

Wire side of female terminals

Is there continuity?

YES—Repair short in the wire between the ECM/PCM (B13) and the alternator.■

NO—Update the ECM/PCM if it does not have the latest software, or substitute a known-good ECM/PCM (see page 11-6), then recheck. If the symptom/indication goes away with a known-good ECM/PCM, replace the original ECM/PCM (see page 11-284).■

2005-2006 models

1. Start the engine, and let it idle.
2. Monitor the ALTERNATOR in the DATA LIST with the HDS.
3. Check if the indicated percentage varies when the headlight switch is on.

   Does the percentage vary?

   YES—The alternator signal circuit is OK. ■

   NO—Go to step 4.
4. Turn the headlight switch and the ignition switch OFF.
5. Jump the SCS line with the HDS.
6. Disconnect the alternator 4P connector.
7. Disconnect ECM/PCM connector B (24P).
8. Check for continuity between body ground and ECM/PCM connector terminal B13.

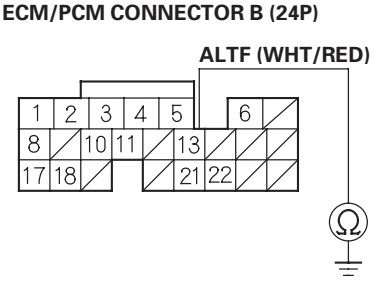

Wire side of female terminals

Is there continuity?

YES—Repair short in the wire between the ECM/PCM (B13) and the alternator. ■

NO—Update the ECM/PCM if it does not have the latest software, or substitute a known-good ECM/PCM (see page 11-6), then recheck. If the symptom/indication goes away with a known-good ECM/PCM, replace the original ECM/PCM (see page 11-284). ■

PSP Switch Signal Circuit Troubleshooting

2002-2004 models

1. Turn the ignition switch ON (II).
2. Measure voltage between ECM/PCM connector terminals A24 and E16.

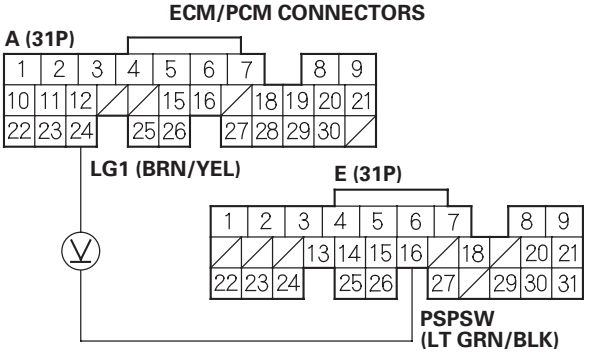

Wire side of female terminals

Is there less than 1.0 V?

YES—Go to step 3.

NO—Go to step 6.

3. Start the engine.
4. Turn the steering wheel to the full lock position.
5. Measure voltage between ECM/PCM connector terminals A24 and E16.

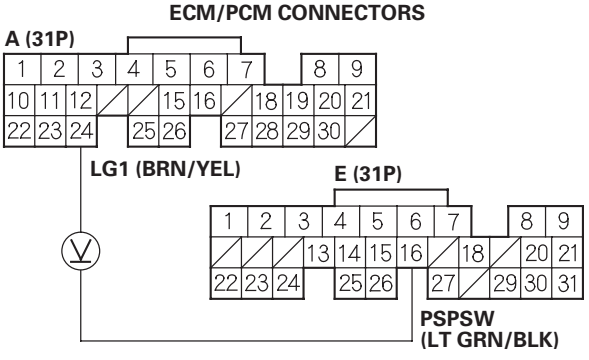

Wire side of female terminals

Is there battery voltage?

YES—The PSP switch signal is OK. ■

NO—Go to step 11.

6. Turn the ignition switch OFF.
7. Disconnect the PSP switch 2P connector.
8. Turn the ignition switch ON (II).
9. At the harness side, connect PSP switch 2P connector terminals No. 1 and No. 2 with a jumper wire.

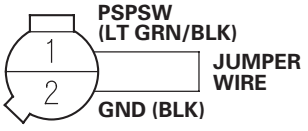

Wire side of female terminals

10. Measure voltage between ECM/PCM connector terminals A24 and E16.

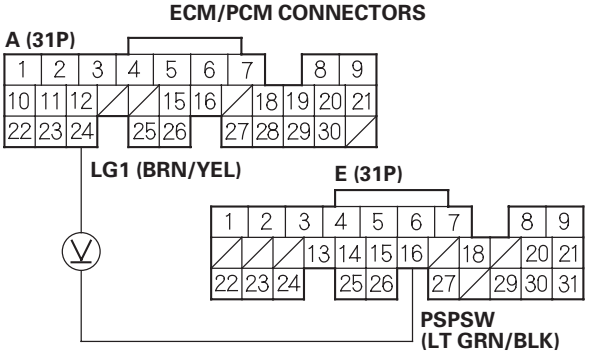

Wire side of female terminals

Is there less than 1.0 V?

YES—Replace the PSP switch. ■

NO—Check for an open in the wire between the ECM/PCM (E16) and the PSP switch, or an open in wire between the PSP switch and G451. ■

11. Turn the ignition switch OFF.
12. Disconnect the PSP switch 2P connector.
13. Turn the ignition switch ON (II).

14. Measure voltage between ECM/PCM connector terminals A24 and E16.

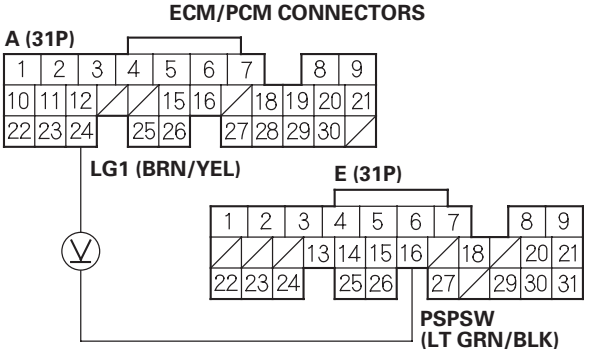

Wire side of female terminals

Is there battery voltage?

YES—Replace the PSP switch. ■

NO—Go to step 15.

15. Turn the ignition switch OFF.

16. Disconnect ECM/PCM connector E (31P).

17. Check for continuity between body ground and ECM/PCM connector terminal E16.

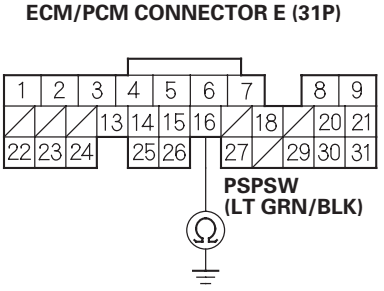

Wire side of female terminals

Is there continuity?

YES—Repair short in the wire between ECM/PCM (E16) and the PSP switch. ■

NO—Update the ECM/PCM if it does not have the latest software, or substitute a known-good ECM/PCM (see page 11-6), then recheck. If the symptom/indication goes away with a known-good ECM/PCM, replace the original ECM/PCM (see page 11-284). ■

PSP Switch Signal Circuit Troubleshooting (cont'd)

2005-2006 models

1. Start the engine, and let it idle.
2. Align the steering wheel straight ahead.
3. Check the PSP SWITCH in the DATA LIST with the HDS.

   Does it indicate ON?

   YES—Go to step 4.

   NO—Go to step 12.
4. Turn the steering wheel to the full lock position.
5. Check the PSP SWITCH in the DATA LIST with the HDS.

   Does it change to OFF?

   YES—The PSP switch signal circuit is OK. ■

   NO—Go to step 6.
6. Disconnect the PSP switch 2P connector.
7. Check the PSP SWITCH in the DATA LIST with the HDS.

   Does it change to OFF?

   YES—Replace the PSP switch. ■

   NO—Go to step 8.
8. Turn the ignition switch OFF.
9. Jump the SCS line with the HDS.
10. Disconnect ECM/PCM connector E (31P).
11. Check for continuity between PSP switch 2P connector terminal No. 1 and body ground.

PSP SWITCH 2P CONNECTOR

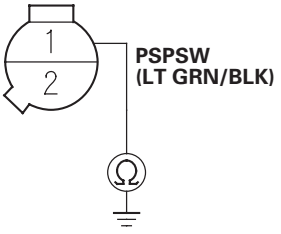

Wire side of female terminals

Is there continuity?

YES—Repair short in the wire between the ECM/PCM (E16) and the PSP switch. ■

NO—Update the ECM/PCM if it does not have the latest software, or substitute a known-good ECM/PCM (see page 11-6), then recheck. If the symptom/indication goes away with a known-good ECM/PCM, replace the original ECM/PCM (see page 11-284). ■

12. Turn the ignition switch OFF.
13. Disconnect the PSP switch 2P connector.

14. Connect PSP switch 2P connector terminals No. 1 and No. 2 with a jumper wire, then start the engine.

PSP SWITCH 2P CONNECTOR

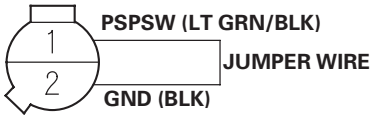

Wire side of female terminals

15. Check the PSPSW in the DATA LIST with the HDS.

    Does it change to ON?

    YES—Replace the PSP switch. ■

    NO—Go to step 16.

16. Turn the ignition switch OFF.

17. Remove the jumper wire from the PSP switch 2P connector.

18. Jump the SCS line with the HDS.

19. Disconnect ECM/PCM connector E (31P).

20. Connect PSP switch 2P connector terminal No. 1 to body ground with a jumper wire.

PSP SWITCH 2P CONNECTOR

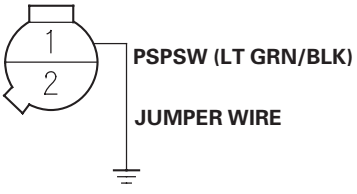

Wire side of female terminals

21. Check for continuity between body ground and ECM/PCM connector terminal E16.

ECM/PCM CONNECTOR E (31P)

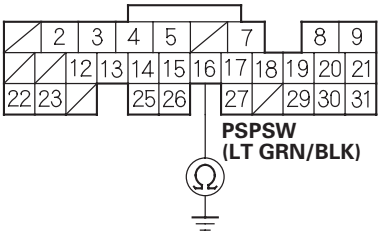

Wire side of female terminals

Is there continuity?

YES—Go to step 22.

NO—Repair open in the wire between the PSP switch and the ECM/PCM (E16). ■

22. Check for continuity between PSP switch 2P connector terminal No. 2 and body ground.

PSP SWITCH 2P CONNECTOR

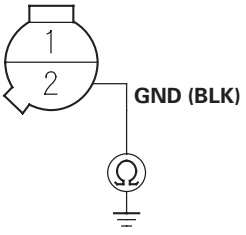

Wire side of female terminals

Is there continuity?

YES—Update the ECM/PCM if it does not have the latest software, or substitute a known-good ECM/PCM (see page 11-6), then recheck. If the symptom/indication goes away with a known-good ECM/PCM, replace the original ECM/PCM (see page 11-284). ■

NO—Repair open in the wire between the PSP switch and G451. ■

Brake Pedal Position Switch Signal Circuit Troubleshooting

2002-2004 models

1. Check the brake lights.

   Are the brake lights on without pressing the brake pedal?

   YES—Inspect the brake pedal position switch (see page 19-4). ■

   NO—Go to step 2.

2. Press the brake pedal.

   Do the brake lights come on?

   YES—Go to step 3.

   NO—Go to step 4.

3. Measure voltage between ECM/PCM connector terminals A24 and E22 with the brake pedal pressed.

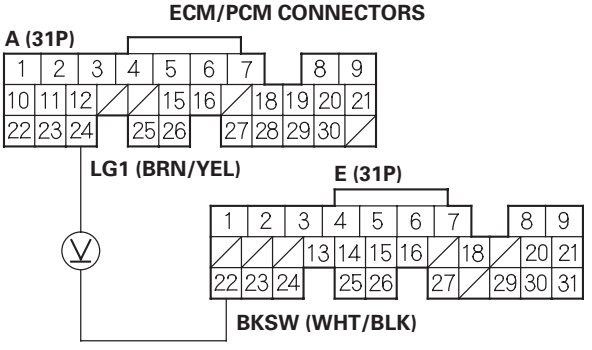

Wire side of female terminals

   Is there battery voltage?

   YES—The brake pedal position switch signal is OK. ■

   NO—Repair open in the wire between the ECM/PCM (E22) and the brake pedal position switch. ■

4. Inspect the No. 7 HORN/STOP (15 A) fuse in the under-hood fuse/relay box.

   Is the fuse OK?

   YES—Repair open in the wire between the brake pedal position switch and the No. 7 HORN/STOP (15 A) fuse. Inspect the brake pedal position switch (see page 19-4). ■

   NO—Repair short in the wire between the ECM/PCM (E22) and the No. 7 HORN/STOP (15 A) fuse. Replace the No. 7 HORN/STOP (15 A) fuse. ■

2005-2006 models

1. Turn the ignition switch ON (II).

2. Check the BRAKE SWITCH in the DATA LIST with the HDS.

   Does it indicate OFF?

   YES—Go to step 3.

   NO—Inspect the brake pedal position switch (see page 19-4). ■

3. Press the brake pedal, and check the BRAKE SWITCH in the DATA LIST with the HDS.

   Does it change to ON?

   YES—The brake pedal position switch signal circuit (BKSW line) is OK. ■

   NO—Go to step 4.

4. Turn the ignition switch OFF.

5. Jump the SCS line with the HDS.

6. Disconnect the brake pedal position switch 4P connector.

7. Disconnect ECM/PCM connector E (31P).

8. Check for continuity between ECM/PCM connector terminal E22 and body ground.

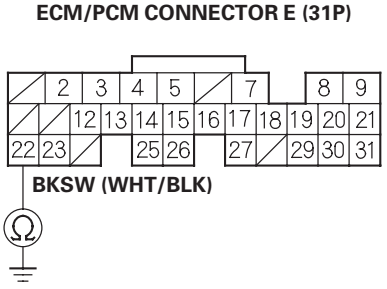

Wire side of female terminals

   Is there continuity?

   YES—Repair short in the wire between the ECM/PCM (E22) and the No. 7 HORN, STOP (15 A) fuse. Replace the No. 7 HORN, STOP (15 A) fuse. ■

   NO—Go to step 9.

9. Check for continuity between ECM/PCM connector terminal E22 and brake pedal position switch 4P connector terminal No. 2.

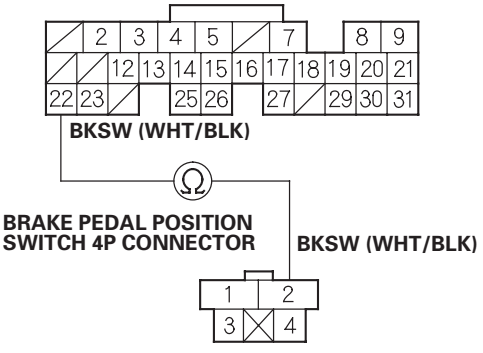

Wire side of female terminals

   Is there continuity?

   YES—Repair open in the wire between the brake pedal position switch and the No. 7 HORN, STOP (15 A) fuse. Inspect the brake position switch (see page 19-4). ■

   NO—Repair open in the wire between the ECM/PCM (E22) and the brake pedal position switch. ■

Idle Speed Inspection

NOTE:
- Leave the idle air control (IAC) valve connected.
- Before checking the idle speed, check these items:
  - The malfunction indicator lamp (MIL) has not been reported on.
  - Ignition timing
  - Spark plugs
  - Air cleaner
  - PCV system
- Pull the parking brake lever up. Start the engine, and make sure the headlights are off.

1. Disconnect the evaporative emission (EVAP) canister purge valve 2P connector.

2. 2002-2004 models: Connect a tachometer (A) to the test tachometer connector (B), or connect the HDS or a scan tool to the data link connector (DLC) (C) located under the driver's side of the dashboard.

2002-2004 models

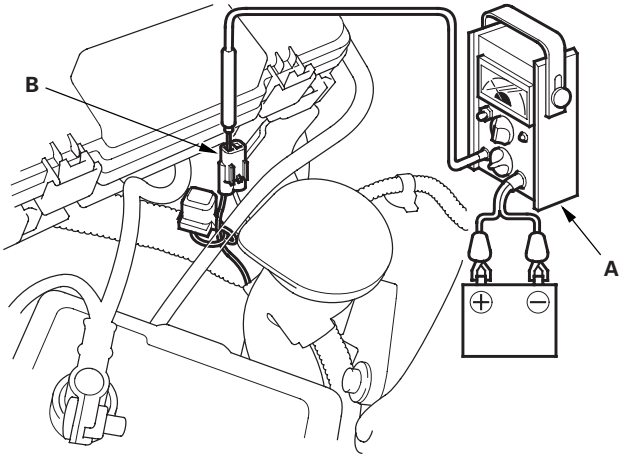

2002-2006 models

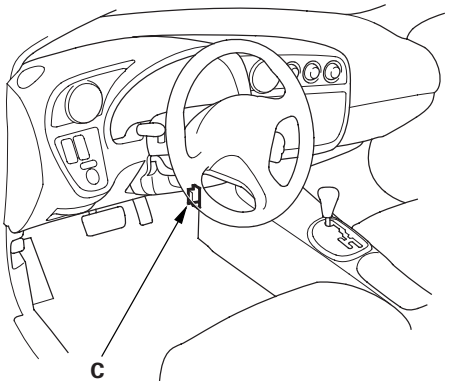

3. 2005-2006 models: Connect the HDS to the data link connector (DLC) under the driver's side of the dashboard.

4. Start the engine. Hold the engine speed at 3,000 rpm without load (in Park or neutral) until the radiator fan comes on, then let it idle.

5. Check the idle speed without load conditions: headlights, blower fan, radiator fan, and air conditioner off.

   Idle speed should be:
   K20A2 engine: 700±50 rpm
   K20A3 engine:

M/T	**700±50 rpm**
A/T	**700±50 rpm (in Park or neutral)**

   K20Z1 engine: 800±50 rpm

6. Let the engine idle 1 minute with high electric load (A/C switch ON, temperature set to Max Cool, blower fan on High, rear window defogger ON, and head lights on high beam).

   Idle speed should be:
   K20A2 engine: 780±50 rpm
   K20A3 engine—2002-2004 models:

M/T	**720±50 rpm**
A/T	**720±50 rpm (in Park or neutral)**

   K20Z1 engine: 850±50 rpm
   K20A3 engine—2005-2006 models:

M/T	**700±50 rpm**
A/T	**700±50 rpm (in Park or neutral)**

   NOTE: If the idle speed is not within specification, do the ECM/PCM idle learn procedure, 2002-2004 models (see page 11-349), 2005-2006 models (see page 11-349). If the idle is still out of specification, go to the symptom troubleshooting.

7. Reconnect the EVAP canister purge valve 2P connector.

ECM/PCM Idle Learn Procedure

2002-2004 models

The idle learn procedure must be done so the ECM/PCM can learn the engine idle characteristics.

Do the idle learn procedure whenever you do any of these actions:

- Disconnect the battery.
- Replace the ECM/PCM or disconnect its connector.
- Replace or clean the throttle body.
- Reset the ECM/PCM.
  NOTE: Erasing DTCs with the HDS does not require you to do the idle learn procedure.
- Remove the No. 6 ECU (ECM/PCM) (15 A) fuse from the under-hood fuse/relay box.
- Remove the No. 19 battery (100 A) fuse from the under-hood fuse/relay box.
- Remove PGM-FI main relay 1 (FI MAIN).
- Remove any of the wires from the under-hood fuse/relay box
- Disconnect any of the connectors from the under-hood fuse/relay box.
- Disconnect the connector between the engine compartment wire harness and ECM/PCM wire harness.
- Disconnect the G2 terminal from the transmission housing.
- Disconnect the G1 terminal from the body.
- Disconnect the G101 terminal from the water passage.

Procedure

1. Start the engine. Hold the engine speed at 3,000 rpm without load (in park or neutral) until the radiator fan comes on, or until the engine coolant temperature reaches 194 ℉ (90 ℃).

2. Let the engine idle for about 5 minutes with the throttle fully closed.

   NOTE: If the radiator fan comes on, do not include its running time in the 5 minutes.

2005-2006 models

The idle learn procedure must be done so the ECM/PCM can learn the engine idle characteristics.

Do the idle learn procedure whenever you do any of these actions:

- Replace ECM/PCM.
- Reset ECM/PCM.
- Update ECM/PCM.
  NOTE: Erasing DTCs with the HDS does not require you to do the idle learn procedure.
- Replace or clean the throttle body.

Procedure

1. Make sure all electrical items (A/C, audio, rear window defogger, lights, etc.) are off.

2. Reset the ECM/PCM with the HDS.

3. Turn the ignition switch ON (II), and wait 2 seconds.

4. Start the engine. Hold the engine speed at 3,000 rpm without load (in Park or neutral) until the radiator fan comes on, or until the engine coolant temperature reaches 194 ℉ (90 ℃).

5. Let the engine idle for about 5 minutes with the throttle fully closed.

   NOTE: If the radiator fan comes on, do not include its running time in the 5 minutes.

Component Location Index

K20A2 engine

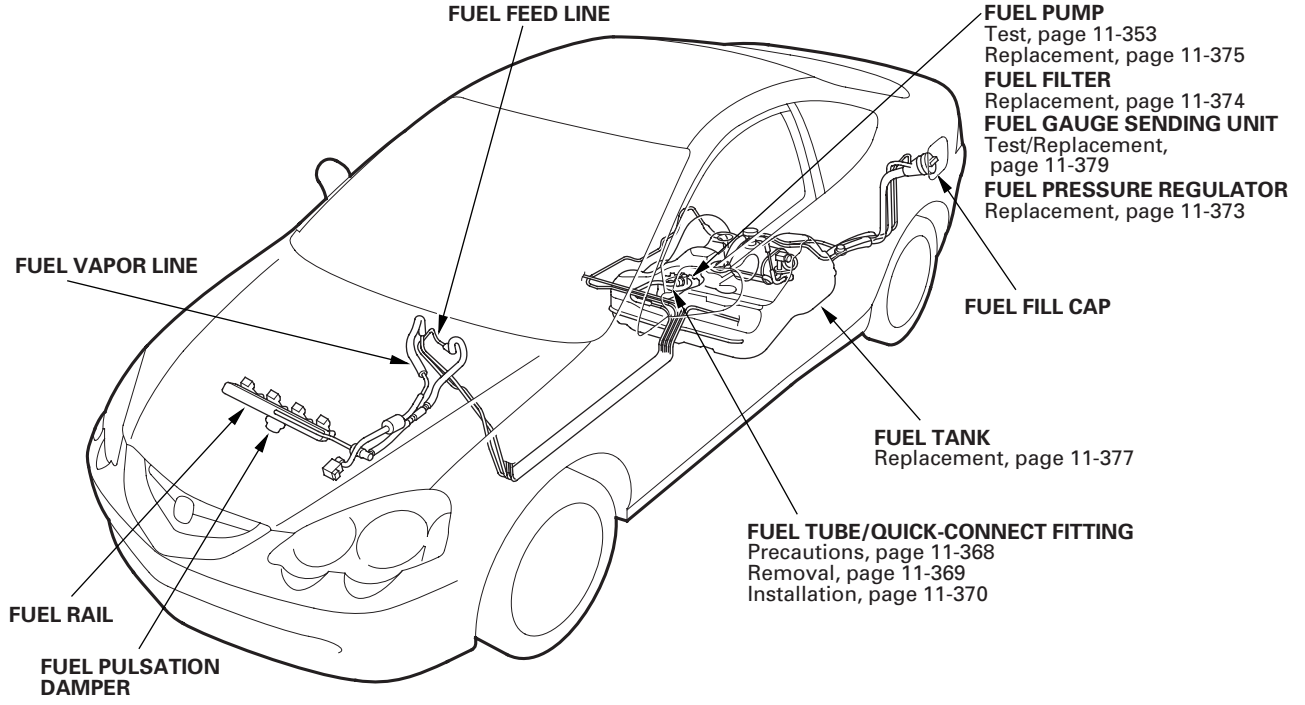

K20Z1 engine

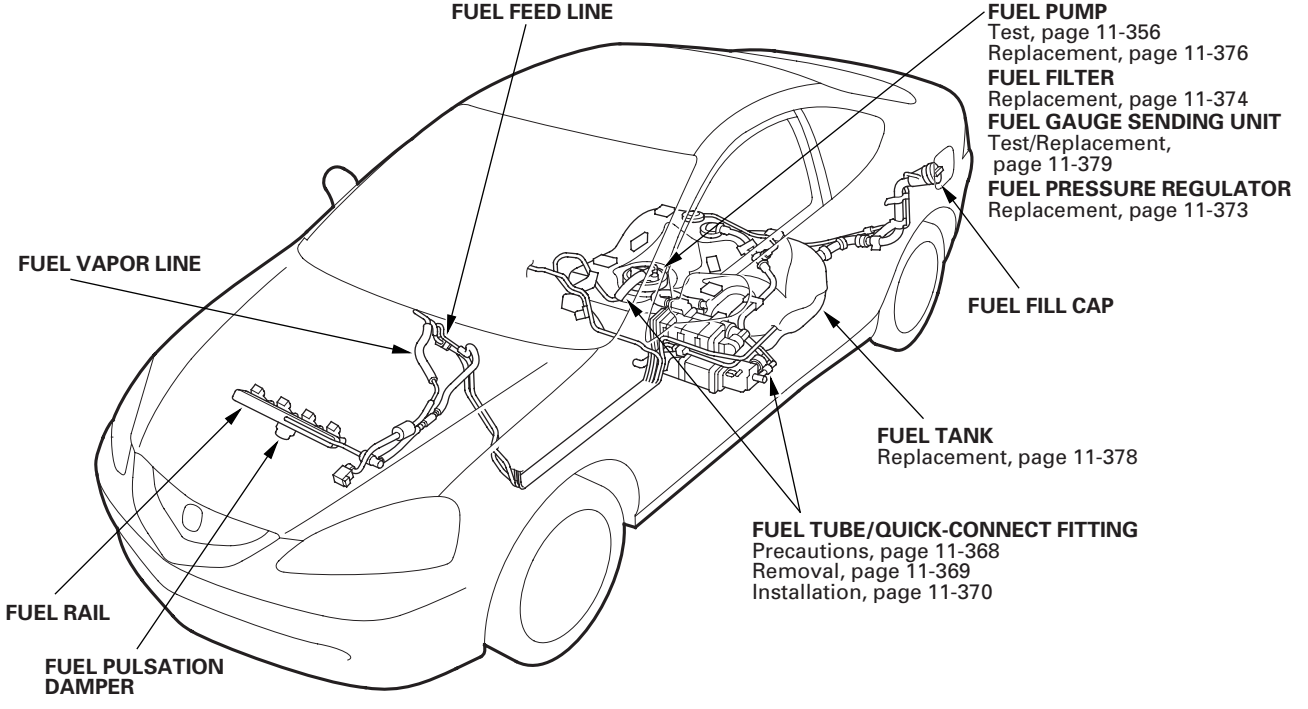

K20A3 engine—2002-2004 models

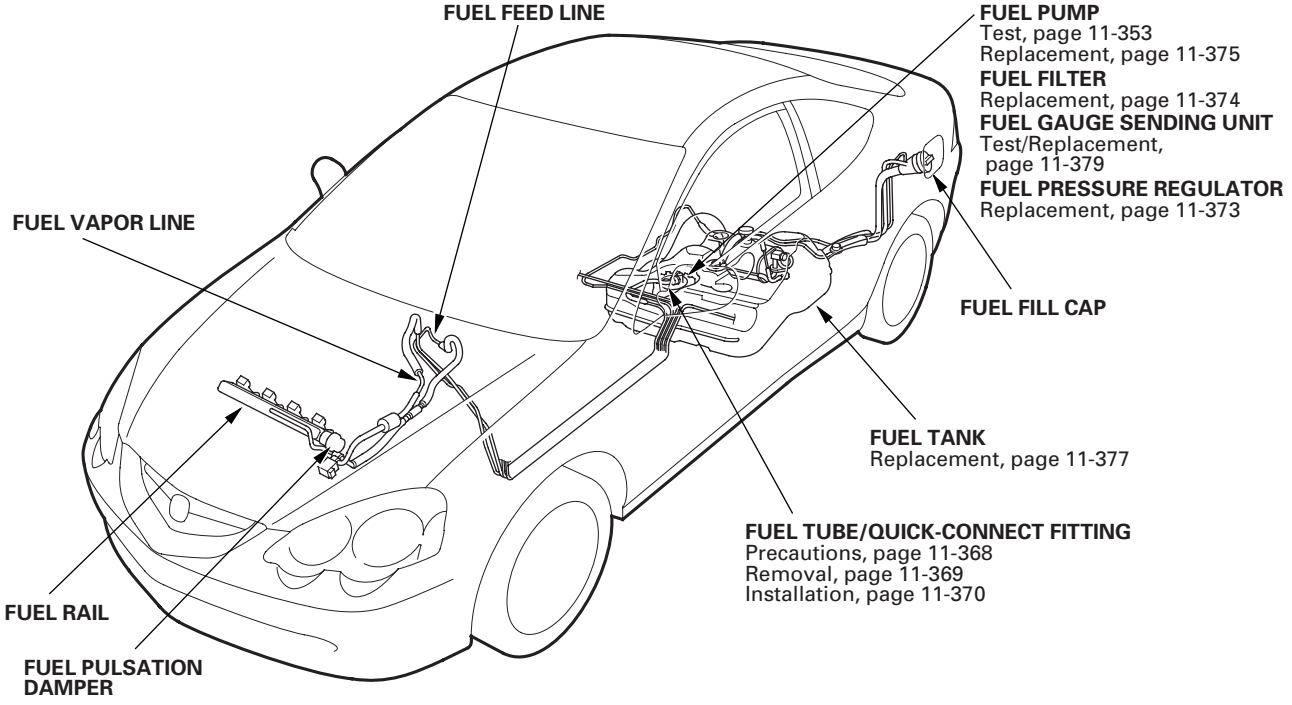

K20A3 engine—2005-2006 models

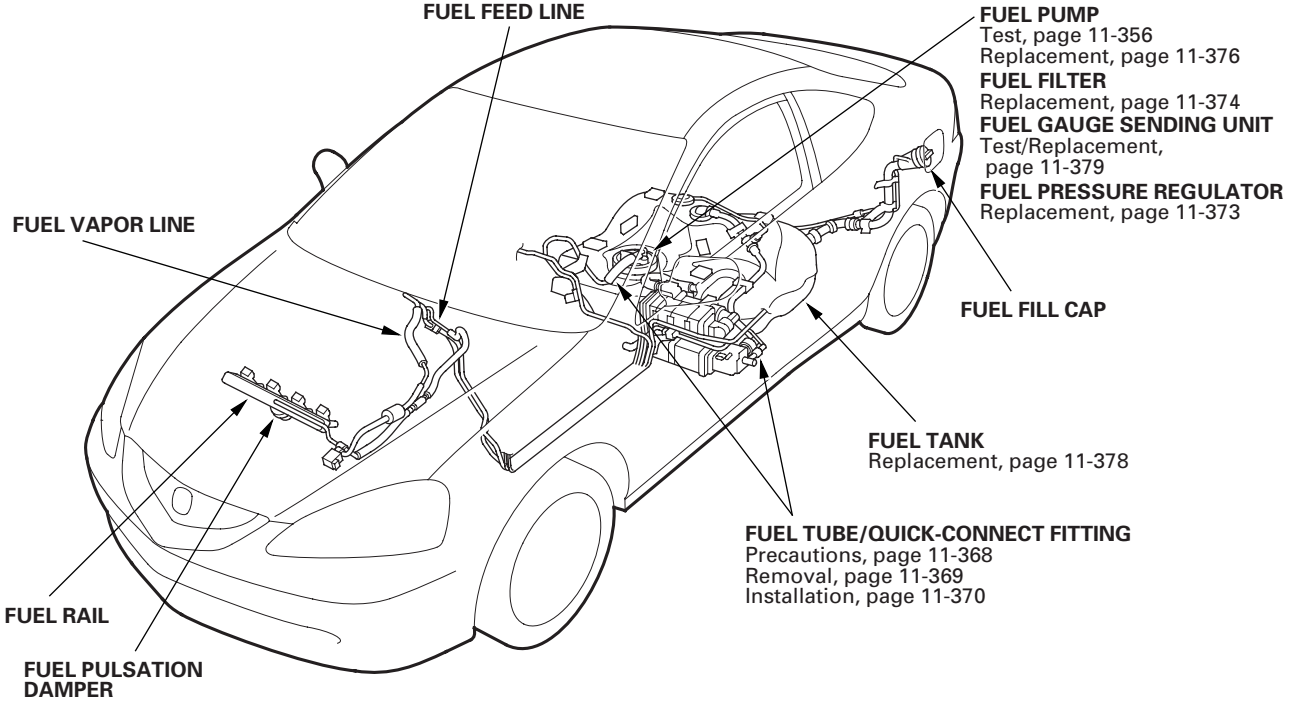

(cont'd)

Component Location Index (cont'd)

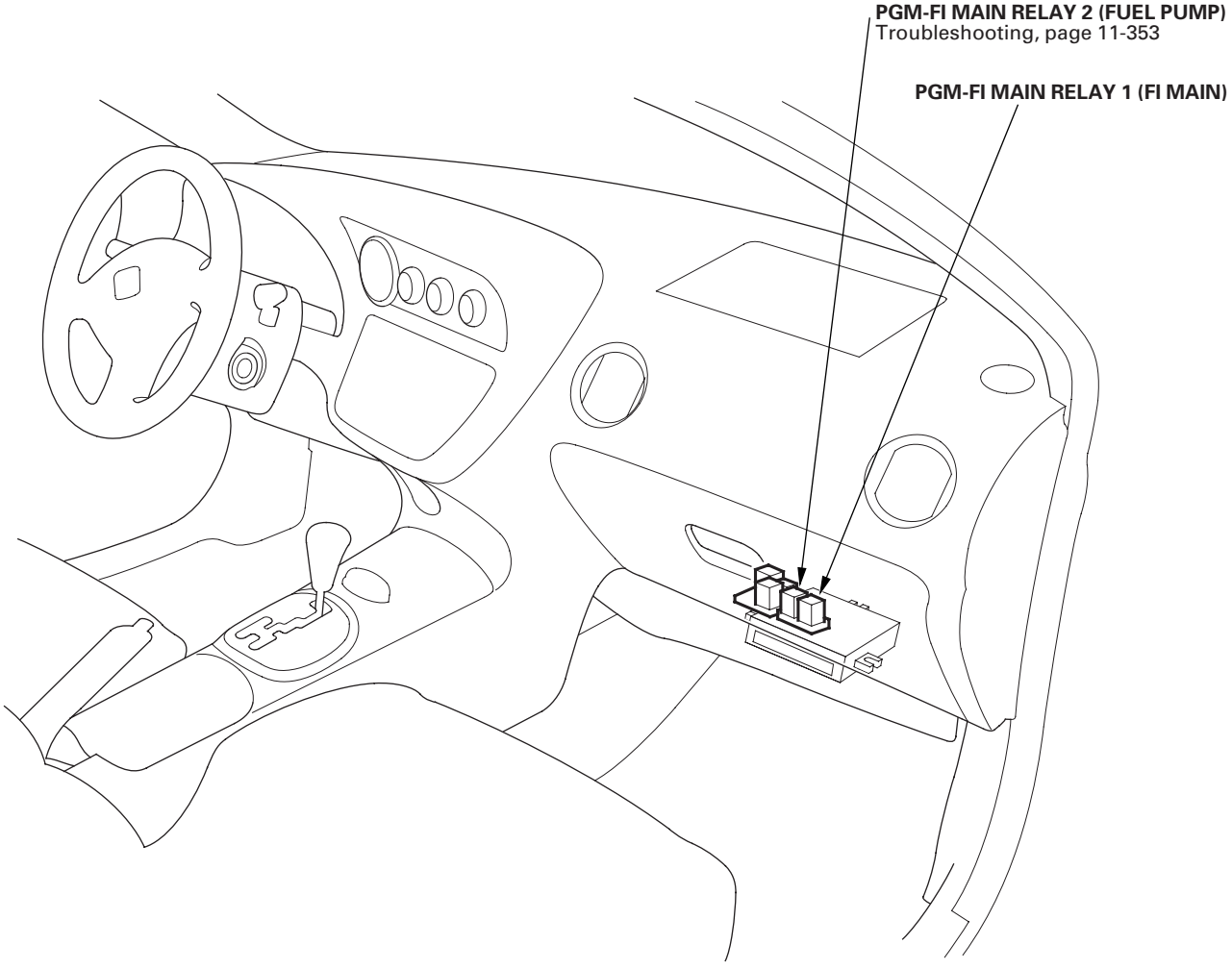

Fuel Pump Circuit Troubleshooting

2002-2004 models

If you suspect a problem with the fuel pump, check that the fuel pump actually runs; when it is ON, you will hear some noise if you listen to the fuel fill port with the fuel fill cap removed. The fuel pump should run for 2 seconds when the ignition switch is first turned on. If the fuel pump does not make noise, check as follows:

1. Turn the ignition switch OFF.

2. Remove the glove box (see page 20-67), then remove PGM-FI main relay 2 (FUEL PUMP) (A).

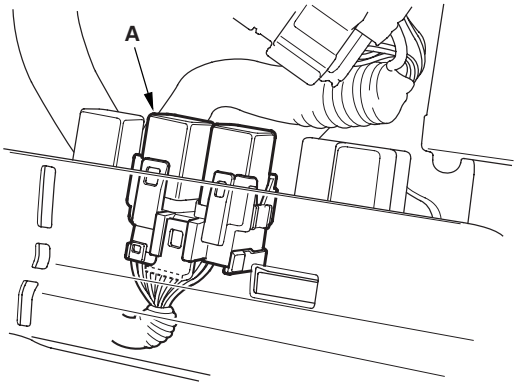

3. Turn the ignition switch ON (II).

4. Measure voltage between PGM-FI main relay 2 (FUEL PUMP) 5P connector terminal No. 5 and body ground.

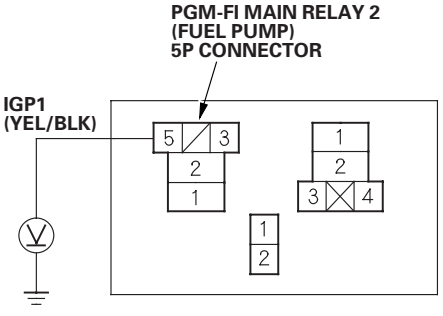

Wire side of female terminals

Is there battery voltage?

YES—Go to step 5.

NO—Repair open in the wire between PGM-FI main relay 1 (FI MAIN) and PGM-FI main relay 2 (FUEL PUMP). ■

5. Measure voltage between PGM-FI main relay 2 (FUEL PUMP) 5P connector terminal No. 1 and body ground.

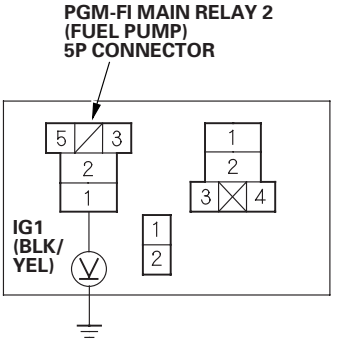

Wire side of female terminals

Is there battery voltage?

YES—Go to step 6.

NO—Check the No. 17 (15 A) fuel pump fuse. If the fuse is OK, repair open in the wire between the under-dash fuse/relay box and PGM-FI main relay 2 (FUEL PUMP). ■

6. Turn the ignition switch OFF.

7. Disconnect ECM/PCM connector E (31P).

8. Check for continuity between PGM-FI main relay 2 (FUEL PUMP) 5P connector terminal No. 3 and ECM/PCM connector terminal E1.

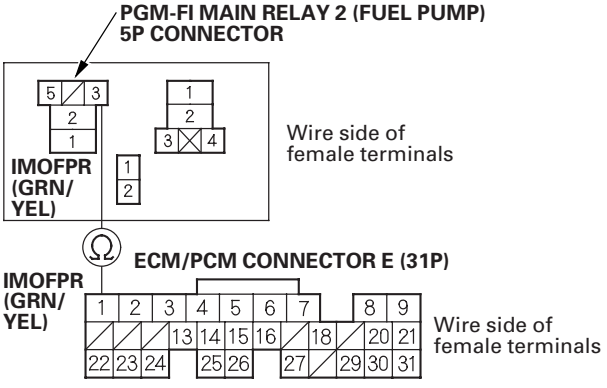

Is there continuity?

YES—Go to step 9.

NO—Repair open in the wire between PGM-FI main relay 2 (FUEL PUMP) and the ECM/PCM (E1). ■

(cont'd)

Fuel Pump Circuit Troubleshooting (cont'd)

9. Reinstall PGM-FI main relay 2 (FUEL PUMP).

10. Connect ECM/PCM connector terminal E7 to body ground with a jumper wire.

ECM/PCM CONNECTOR E (31P)

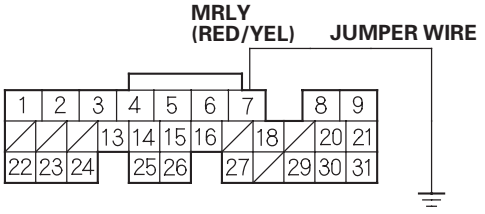

Wire side of female terminals

11. Turn the ignition switch ON (II).

12. Measure voltage between ECM/PCM connector terminal E1 and body ground.

ECM/PCM CONNECTOR E (31P)

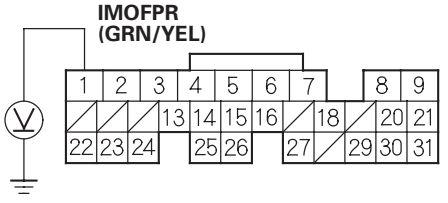

Wire side of female terminals

Is there battery voltage?

YES—Go to step 13.

NO—Replace PGM-FI main relay 2 (FUEL PUMP). ■

13. Turn the ignition switch OFF.

14. Reconnect ECM/PCM connector E (31P).

15. Turn the ignition switch ON (II), and measure voltage between ECM/PCM connector terminal E1 and body ground within 2 seconds.

ECM/PCM CONNECTOR E (31P)

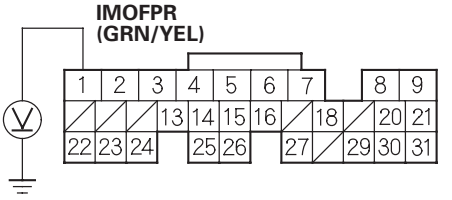

Wire side of female terminals

Is there battery voltage?

YES—Update the ECM/PCM if it does not have the latest software, or substitute a known-good ECM/PCM (see page 11-6), then recheck. If the symptom/indication goes away with a known-good ECM/PCM, replace the original ECM/PCM (see page 11-284). ■

NO—Go to step 16.

16. Turn the ignition switch OFF.

17. Remove the rear seat cushion (see page 20-85).

18. Remove the access panel from the floor.

19. Turn the ignition switch ON (II), and measure voltage between fuel pump 5P connector terminal No. 5 and body ground within 2 seconds.

FUEL PUMP 5P CONNECTOR

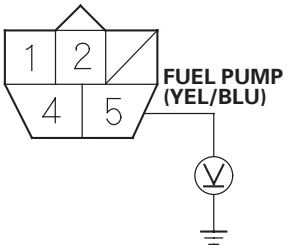

Wire side of female terminals

Is there battery voltage?

YES—Go to step 24.

NO—Go to step 20.

20. Turn the ignition switch OFF.

21. Remove PGM-FI main relay 2 (FUEL PUMP).

22. Connect PGM-FI main relay 2 (FUEL PUMP) 5P connector terminals No. 1 and No. 2 with a jumper wire.

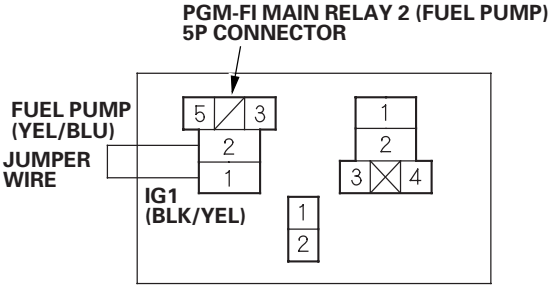

Wire side of female terminals

23. Turn the ignition switch ON (II), and measure voltage between fuel pump 5P connector terminal No. 5 and body ground within 2 seconds.

FUEL PUMP 5P CONNECTOR

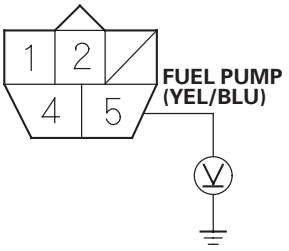

Wire side of female terminals

Is there battery voltage?

YES—Replace PGM-FI main relay 2 (FUEL PUMP).■

NO—Repair open in the wire between PGM-FI main relay 2 (FUEL PUMP) and the fuel pump 5P connector.■

24. Turn the ignition switch OFF.

25. Check for continuity between fuel pump 5P connector terminal No. 4 and body ground.

FUEL PUMP 5P CONNECTOR

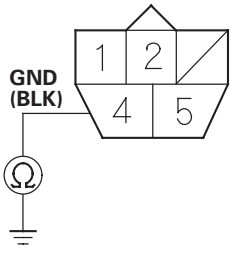

Wire side of female terminals

Is there continuity?

YES—Replace the fuel pump.■

NO—Repair open in the wire between the fuel pump 5P connector and G501.■

Fuel Pump Circuit Troubleshooting (cont'd)

2005-2006 models

If you suspect a problem with the fuel pump, check that the fuel pump actually runs; when it is on, you will hear some noise if you listen to the fuel fill port with the fuel fill cap removed. The fuel pump should run for 2 seconds when the ignition switch is first turned on. If the fuel pump does not make noise, check as follows:

1. Turn the ignition switch OFF.

2. Remove the glove box (see page 20-67), then remove PGM-FI main relay 2 (FUEL PUMP) (A).

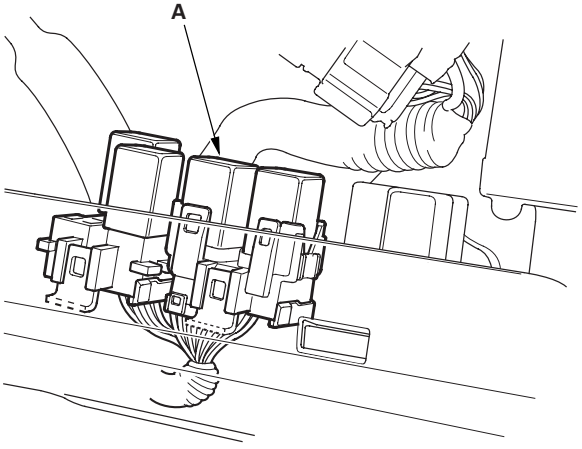

3. Turn the ignition switch ON (II).

4. Measure voltage between PGM-FI main relay 2 (FUEL PUMP) 5P connector terminal No. 5 and body ground.

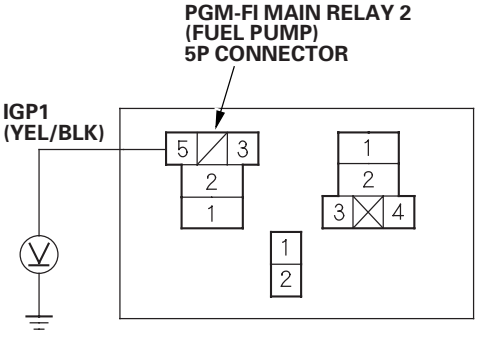

Wire side of female terminals

Is there battery voltage?

YES—Go to step 5.

NO—Repair open in the wire between PGM-FI main relay 1 (FI MAIN) and PGM-FI main relay 2 (FUEL PUMP). ■

5. Measure voltage between PGM-FI main relay 2 (FUEL PUMP) 5P connector terminal No. 1 and body ground.

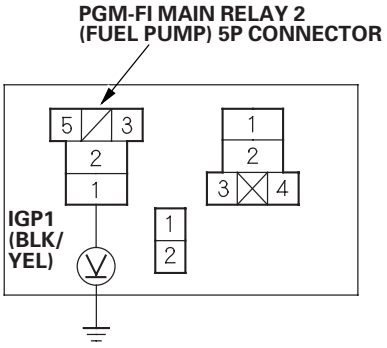

Wire side of female terminals

Is there battery voltage?

YES—Go to step 6.

NO—Repair open in the wire between the under-dash fuse/relay box and PGM-FI main relay 2 (FUEL PUMP). ■

6. Turn the ignition switch OFF.

7. Jump the SCS line with the HDS.

8. Disconnect ECM/PCM connector E (31P).

9. Check for continuity between PGM-FI main relay 2 (FUEL PUMP) 5P connector terminal No. 3 and ECM/PCM connector terminal E17.

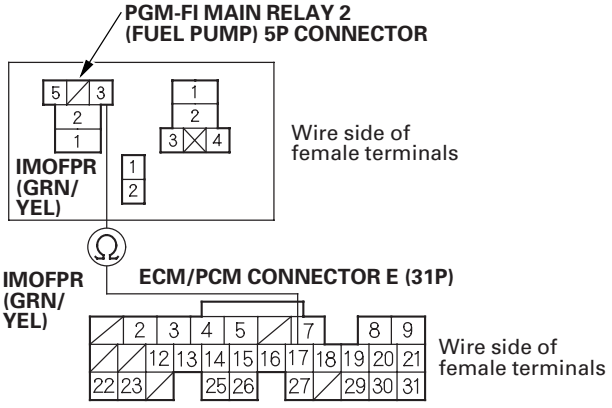

Is there continuity?

YES—Go to step 10.

NO—Repair open in the wire between PGM-FI main relay 2 (FUEL PUMP) and the ECM/PCM (E17). ■

(cont'd)

Fuel Pump Circuit Troubleshooting (cont'd)

10. Reinstall PGM-FI main relay 2 (FUEL PUMP).

11. Connect ECM/PCM connector terminal E7 to body ground with a jumper wire.

ECM/PCM CONNECTOR E (31P)

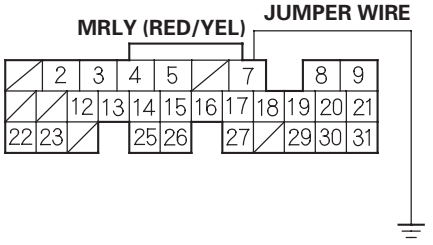

Wire side of female terminals

12. Turn the ignition switch ON (II).

13. Measure voltage between ECM/PCM connector terminal E17 and body ground.

ECM/PCM CONNECTOR E (31P)

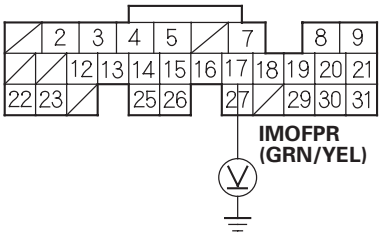

Wire side of female terminals

Is there battery voltage?

YES—Go to step 14.

NO—Replace PGM-FI main relay 2 (FUEL PUMP). ■

14. Turn the ignition switch OFF.

15. Remove the jumper wire, and reconnect ECM/PCM connector E (31P).

16. Open the SCS line with the HDS.

17. Turn the ignition switch OFF.

18. Turn the ignition switch ON (II), and measure voltage between ECM/PCM connector terminal E17 and body ground within the first 2 seconds after the ignition switch was turned on.

ECM/PCM CONNECTOR E (31P)

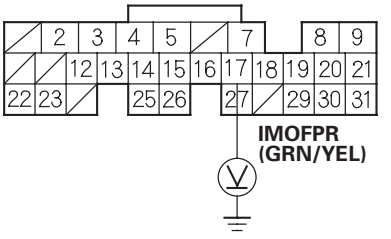

Wire side of female terminals

Is there battery voltage?

YES—Update the ECM/PCM if it does not have the latest software, or substitute a known-good ECM/PCM (see page 11-6), then recheck. If the symptom/indication goes away with a known-good ECM/PCM, replace the original ECM/PCM (see page 11-284). ■

NO—Go to step 20.

19. Turn the ignition switch OFF.

20. Remove the rear seat cushion (see page 20-85).

21. Remove the access panel from the floor.

22. Measure voltage between fuel pump 5P connector terminal No. 5 and body ground within the first 2 seconds after the ignition switch was turned on.

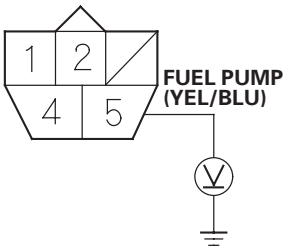

Wire side of female terminals

Is there battery voltage?

YES—Go to step 28.

NO—Go to step 23.

23. Turn the ignition switch OFF.

24. Remove PGM-FI main relay 2 (FUEL PUMP).

25. Connect PGM-FI main relay 2 (FUEL PUMP) 5P connector terminals No. 1 and No. 2 with a jumper wire.

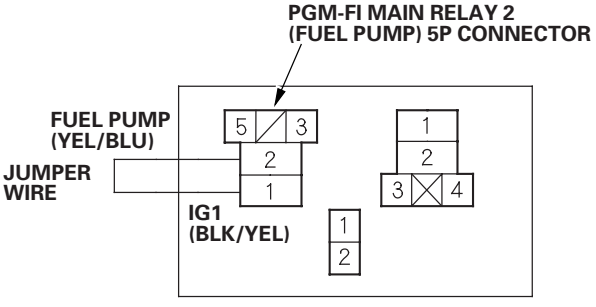

Wire side of female terminals

26. Turn the ignition switch ON (II).

27. Measure voltage between fuel pump 5P connector terminal No. 5 and body ground.

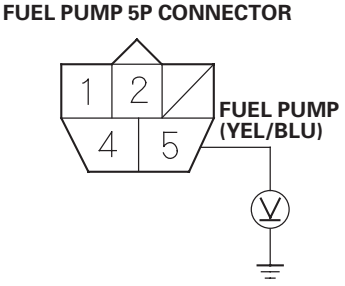

Wire side of female terminals

Is there battery voltage?

YES—Replace PGM-FI main relay 2 (FUEL PUMP).■

NO—Repair open in the wire between PGM-FI main relay 2 (FUEL PUMP) and the fuel pump 5P connector.■

28. Turn the ignition switch OFF.

29. Check for continuity between fuel pump 5P connector terminal No. 4 and body ground.

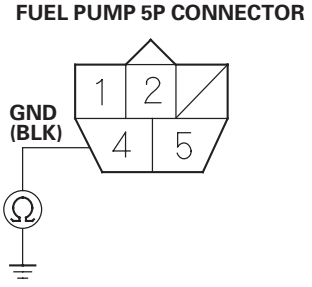

Wire side of female terminals

Is there continuity?

YES—Replace the fuel pump.■

NO—Repair open in the wire between the fuel pump 5P connector and G501.■

Fuel Pressure Relieving

Before disconnecting fuel lines or hoses, relieve pressure from the system by stopping the fuel pump and disconnecting the fuel tube/quick connect fitting in the engine compartment.

With the HDS (2005-2006 models)

1. Remove the fuel fill cap.

2. Turn the ignition switch ON (II).

3. From the INSPECTION MENU of the HDS, select Fuel Pump OFF, then start the engine, and let it idle until it stalls.

4. Turn the ignition switch OFF.

   NOTE:
   - Do not allow the engine to idle above 1,000 rpm or the ECM/PCM will continue to operate the fuel pump.
   - A DTC or a Temporary DTC may be set during this procedure. Check for DTCs, and clear them as needed (see page 11-3).

5. Turn the ignition switch OFF.

6. Make sure you have the anti-theft codes for the radio, then write down the frequencies for the radio's preset buttons.

7. Disconnect the negative cable from the battery.

8. Check the fuel quick-connect fitting for dirt, and clean it if needed.

9. Place a rag or shop towel over the quick-connect fitting (A).

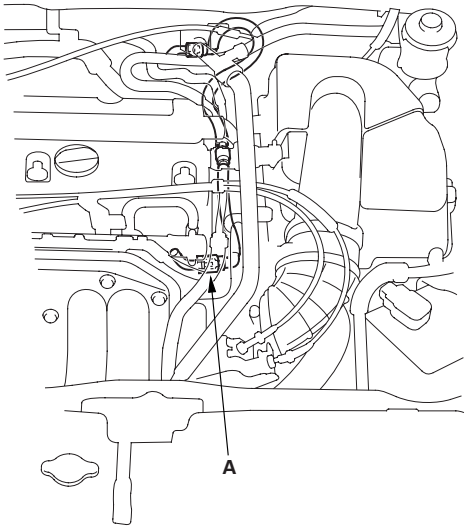

10. Disconnect the quick-connect fitting (A): Hold the connector (B) with one hand, and squeeze the retainer tabs (C) with the other hand to release them from the locking tabs (D). Pull the connector off.

    NOTE:
    - To prevent the remaining fuel in the fuel feed line or hose from flowing out, use a rag or shop towel.
    - Be careful not to damage the line (E) or other parts.
    - Do not use tools.
    - If the connector does not move, keep the retainer tabs pressed down, and alternately pull and push the connector until it comes off easily.
    - Do not remove the retainer from the line; once removed, the retainer must be replaced with a new one.

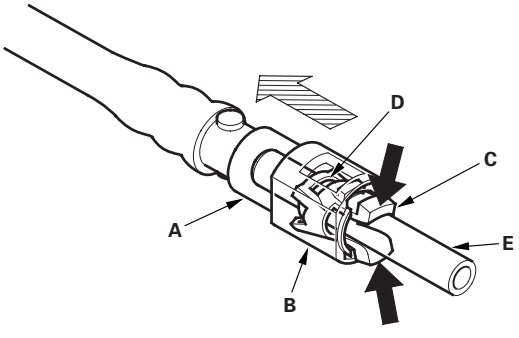

11. After disconnecting the quick-connect fitting, check it for dirt or damage (see step 4 on page 11-370).

12. Reconnect the negative cable to the battery and do these items:

    - ECM/PCM idle learn procedure (see page 11-349).
    - Power window control unit reset procedure (see page 22-148).
    - Enter the anti-theft codes for the radio, then enter the customer's radio station presets.
    - Reset the clock.

Without the HDS (2002-2006 models)

1. Make sure you have the anti-theft codes for the radio, then write down the frequencies for the radio's preset buttons.

2. Remove the glove box (see page 20-67), then remove PGM-FI main relay 2 (FUEL PUMP) (A) from the under-dash fuse/relay box.

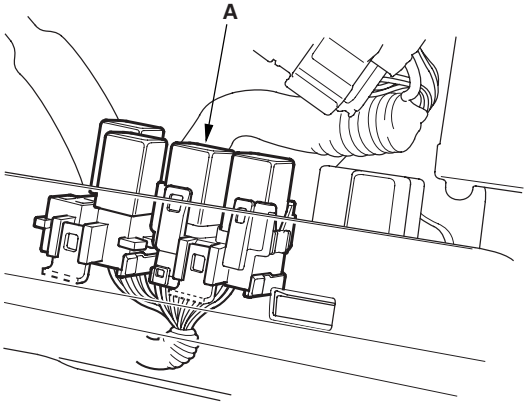

3. Start the engine, and let it idle until it stalls.

   NOTE: If any DTCs are stored, clear and ignore them.

4. Turn the ignition switch OFF.

5. Remove the fuel fill cap, and relieve the pressure in the fuel tank.

6. Disconnect the negative cable from the battery.

7. Check the fuel quick-connect fitting for dirt, and clean it if needed.

8. Place a rag or shop towel over the quick-connect fitting (A).

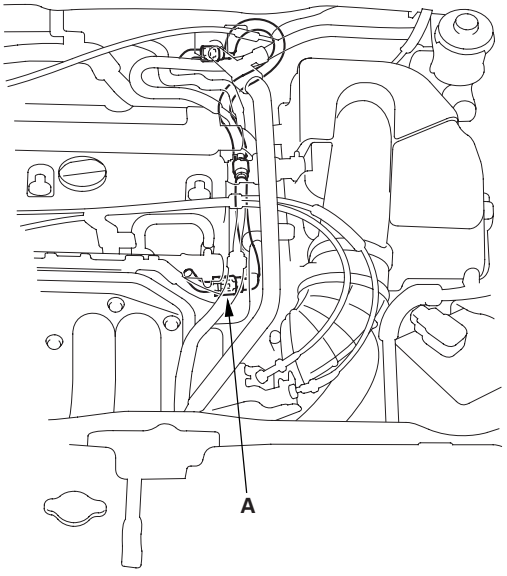

(cont'd)

Fuel Pressure Relieving (cont'd)

9. Disconnect the quick-connect fitting (A): Hold the connector (B) with one hand, and squeeze the retainer tabs (C) with the other hand to release them from the locking tabs (D). Pull the connector off.

   NOTE:
   - To prevent the remaining fuel in the fuel feed line or hose from flowing out, use a rag or shop towel.
   - Be careful not to damage the line (E) or other parts.
   - Do not use tools.
   - If the connector does not move, keep the retainer tabs pressed down, and alternately pull and push the connector until it comes off easily.
   - Do not remove the retainer from the line; once removed, the retainer must be replaced with a new one.

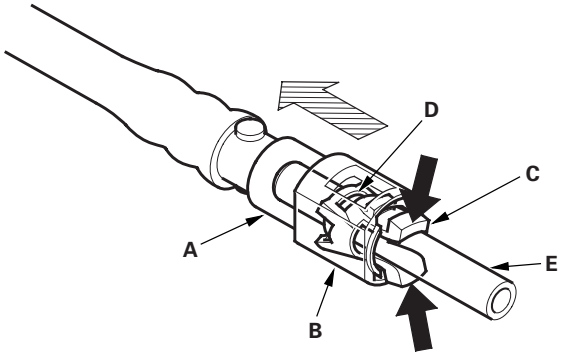

10. After disconnecting the quick-connect fitting, check it for dirt or damage (see step 4 on page 11-370).

11. Reconnect the negative cable to the battery and do these items:

    - ECM/PCM idle learn procedure (see page 11-349).
    - Power window control unit reset procedure (see page 22-148).
    - Enter the anti-theft codes for the radio, then enter the customer's radio station presets.
    - Reset the clock.

Fuel Pressure Test

Special Tools Required
- Fuel pressure gauge 07406-004000B
- Fuel pressure gauge attachment set 07AAJ-S6MA150
- Fuel pressure gauge adapter 07VAJ-0040100

1. Relieve the fuel pressure (see page 11-360).

2. K20A2/K20Z1/K20A3 (2005-2006 models) engines:
   Attach the fuel pressure gauge attachment set (A) and the fuel pressure gauge (B) to the fuel line as shown.

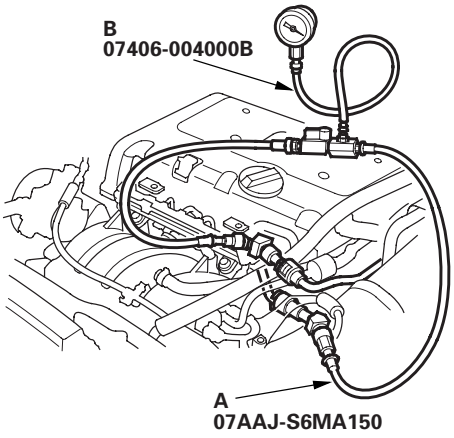

3. K20A3 (2002-2004 models) engines:
   Remove the fuel pulsation damper from its fitting, and attach the fuel pressure gauge adapter (A) and the fuel pressure gauge (B).

   NOTE: Replace all washers whenever the fuel pulsation damper is loosened or removed.

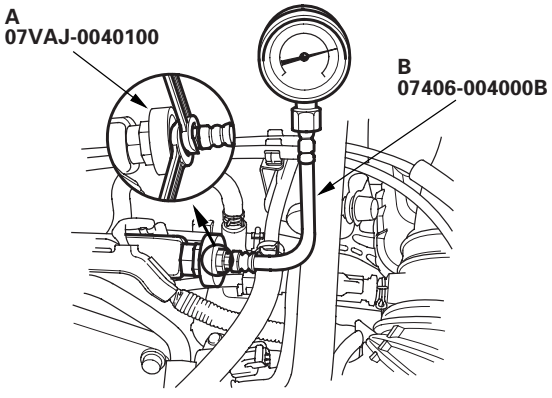

4. Start the engine and let it idle.

   - If the engine starts, go to step 6.
   - If the engine does not start, go to step 5.

5. Check to see if the fuel pump is running: listen to fuel fill port with the fuel fill cap removed. The fuel pump run for about 2 seconds when the ignition is turned on.

   - If the pump runs, step 6.
   - If the pump does not run, do the fuel pump circuit troubleshooting (see page 11-353).

6. Read the pressure gauge. The pressure should be 320—370 kPa (3.3—3.8 kgf/cm^2, 47—54 psi).

   - If the pressure is OK, the test is complete.
   - If the pressure is out of specification, replace the fuel pressure regulator, 2002-2004 models (see page 11-373), 2005-2006 models (see page 11-373), and the fuel filter, 2002-2004 models (see page 11-374), 2005-2006 models (see page 11-374), then recheck fuel pressure.

7. K20A3 (2002-2004 models) engine:
   Remove the pressure gauge, and reinstall the fuel pulsation damper with a new washer. Tighten the fuel pulsation damper to 22 N·m (2.2 kgf·m, 16 lbf·ft).

   NOTE: Disassemble and clean the fuel pressure gauge attachment thoroughly after use.

Fuel Tank Draining

1. Remove the fuel tank unit 2002-2004 models (see page 11-375), 2005-2006 models (see page 11-376).

2. Using a hand pump, a hose, and a container suitable for fuel, draw the fuel from the fuel tank.

3. Install the fuel tank unit 2002-2004 models (see page 11-375), 2005-2006 models (see page 11-376).

Fuel Line Inspection

Check the fuel system lines, hoses, and fuel filter for damage, leaks, or deterioration. Replace any damaged parts.

2002-2004 models

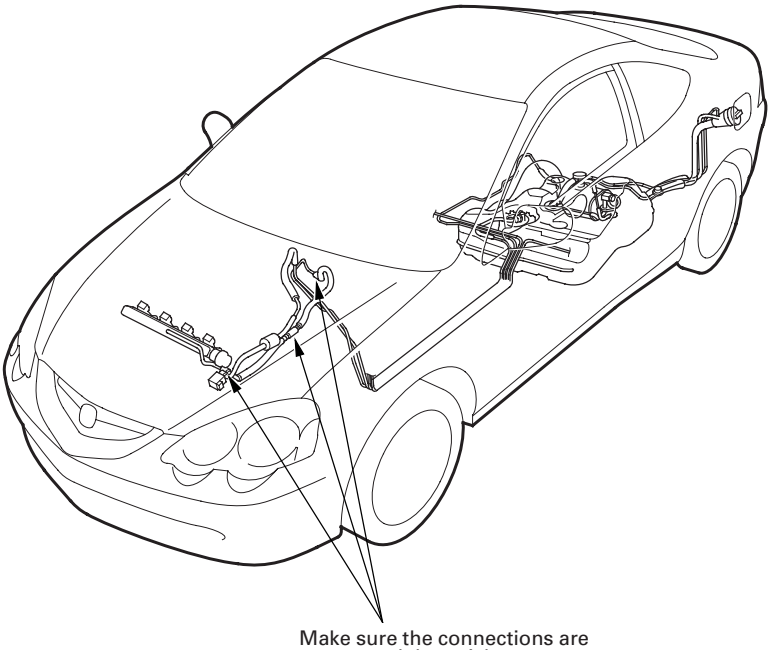

Make sure the connections are secure and the quick-connect fitting covers are firmly locked into place.

2005-2006 models

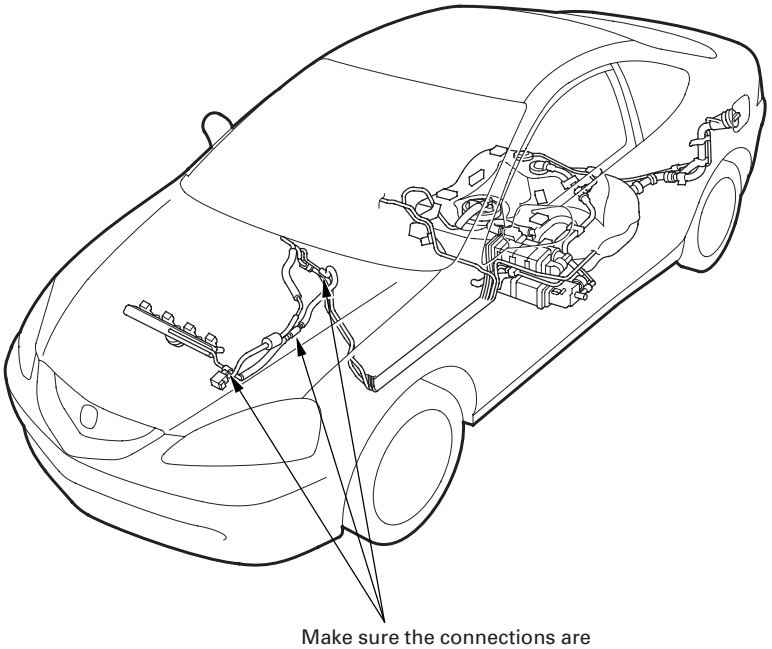

Make sure the connections are secure and the quick-connect fitting covers are firmly locked into place.

(cont'd)

Fuel Line Inspection (cont'd)

2002-2004 models

Check all clamps and retighten if necessary.
▲: Do not disconnect the hose from the pipe at these joints.

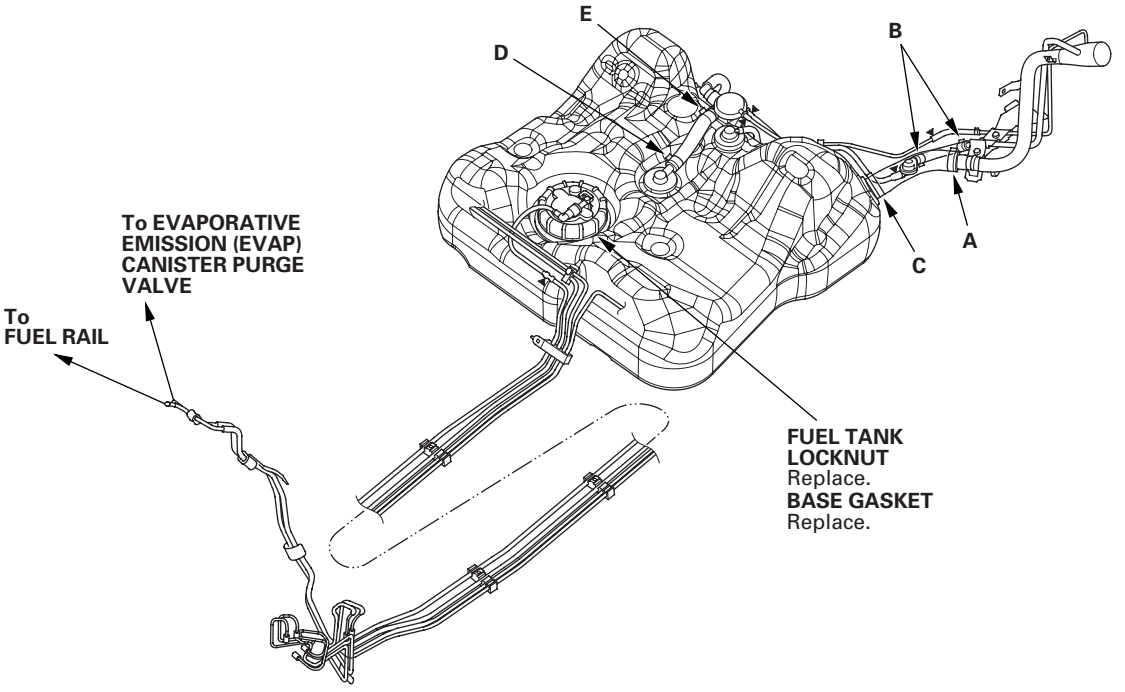

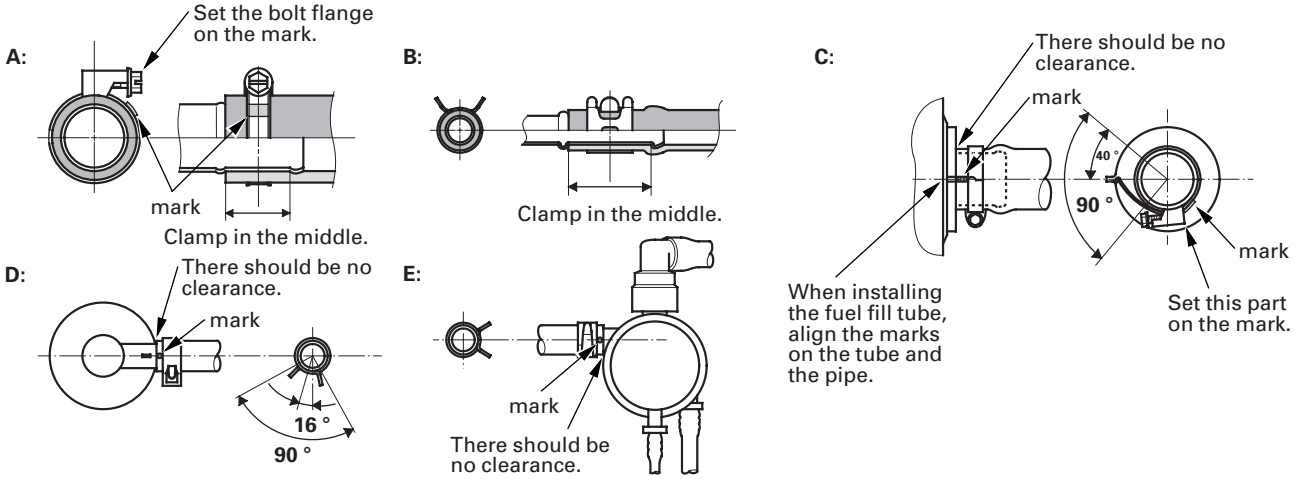

2005-2006 models

Check all clamps and retighten if necessary.
▲: Do not disconnect the hose from the pipe at these joints.

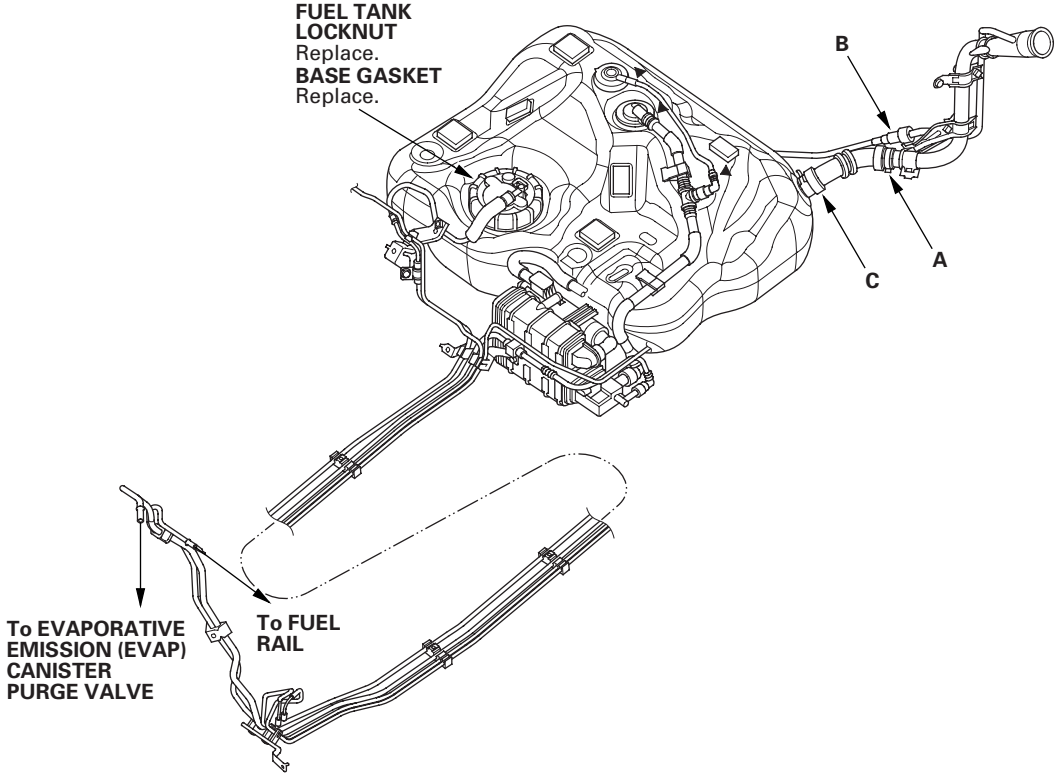

A:

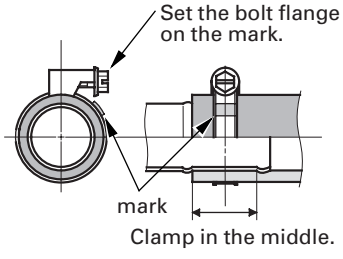

B:

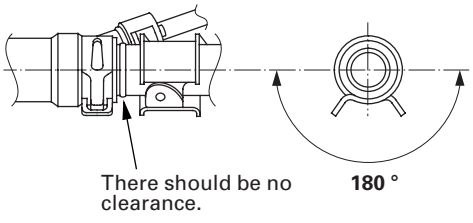

C:

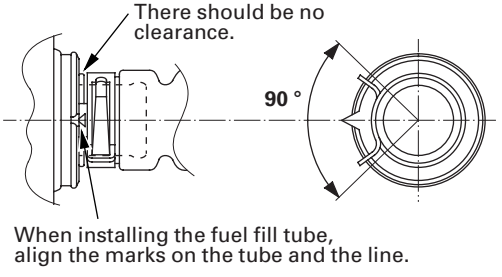

Fuel Line/Quick-Connect Fitting Precautions

The fuel line/quick-connect fittings (A), (B), (C), (D) (2005-2006 models), connect the fuel feed hose (E) to the fuel line (F), the fuel feed hose (G) to the fuel rail (H), the fuel line (I) to the fuel tank unit (J), and the fuel vapor line (K) to the EVAP canister (L) (2005-2006 models). When removing or installing the fuel feed hose, fuel tank unit, or fuel feed tank, it is necessary to disconnect or connect the quick-connect fittings.
Pay attention to the following:

- The fuel feed hoses, fuel line, and quick-connect fittings are not heat-resistant; be careful not to damage them during welding or other heat-generating procedures.
- The fuel feed hoses, fuel line, and quick-connect fittings are not acid-proof; do not touch them with a shop towel that was used for wiping battery electrolyte. Replace them if they came into contact with electrolyte or something similar.
- When connecting or disconnecting the fuel feed hoses, fuel line, and quick-connect fittings, be careful not to bend or twist them excessively. Replace them if they are damaged.

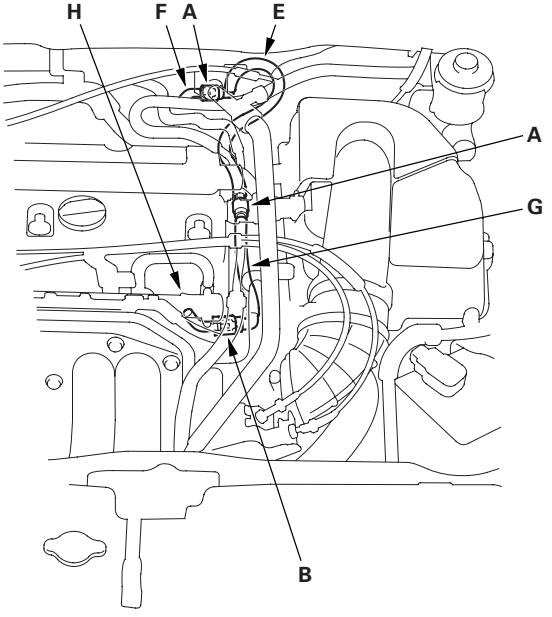

2002-2004 models

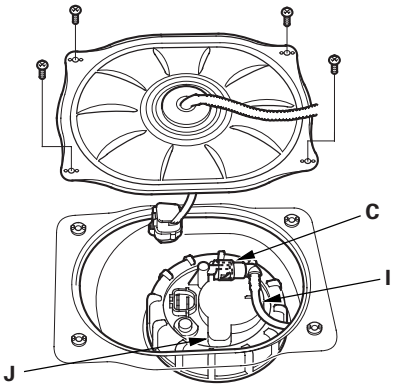

2005-2006 models

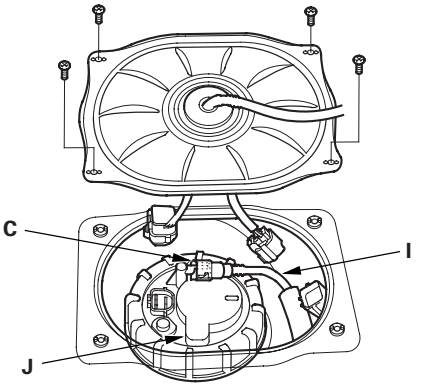

2005-2006 models

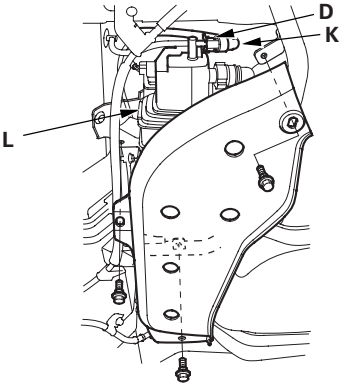

A disconnected quick-connect fitting can be reconnected, but the retainer on the mating line cannot be reused once it has been removed from the line. Replace the retainer when:

- replacing the fuel rail.
- replacing the fuel line.
- replacing the fuel pump.
- replacing the fuel filter.
- replacing the fuel gauge sending unit.
- replacing the EVAP purge line.
- replacing the EVAP canister.
- it has been removed from the line.
- it is damaged.

PLACE	MANUFACTURER	RETAINER COLOR	Line Diameter
A	Tokai	Green	0.2 in. (6.3 mm)
B	Tokai	Blue Green	0.3 in. (8.0 mm)
C	Sanoh	White	0.3 in. (9.5 mm)
D (2005-2006 models)	Sanoh	White	0.3 in. (9.5 mm)

Fuel Line/Quick-Connect Fitting Removal

NOTE: Before you work on the fuel lines and fittings, read the ''Fuel Line/Quick-Connect Fitting Precautions'' (see page 11-368).

1. Relieve fuel pressure (see page 11-360).

2. Check the fuel quick-connect fittings for dirt, and clean it if needed.

3. Place a rag or shop towel over the quick-connect fitting. Hold the connector (A) with one hand and squeeze the retainer tabs (B) with the other hand to release them from the locking tabs (C). Pull the connector off.

   NOTE:
   - Be careful not to damage the line (D) or other parts. Do not use tools.
   - If the connector does not move, keep the retainer tabs pressed down, and alternately pull and push the connector until it comes off easily.
   - Do not remove the retainer from the line; once removed, the retainer must be replaced with a new one.

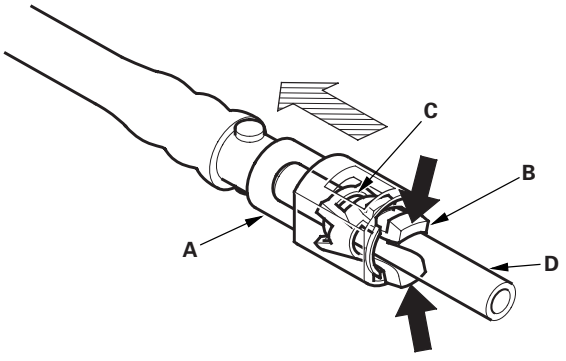

(cont'd)

Fuel Line/Quick-Connect Fitting Removal (cont'd)

4. Check the contact area (A) of the line (B) for dirt or damage.

   - If it is dirty, clean it.
   - If it is rusty or damaged, replace the fuel pump, fuel filter, or fuel feed line.

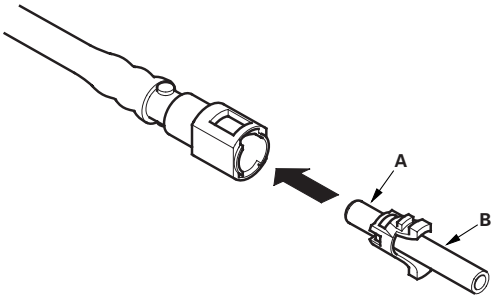

5. To prevent damage and keep foreign matter out, cover the disconnected connector and line ends with plastic bags (A).

   NOTE:
   - The retainer cannot be reused once it has been removed from the line.
     Replace the retainer when:
     – replacing the fuel rail.
     – replacing the fuel feed line.
     – replacing the fuel pump.
     – replacing the fuel filter.
     – replacing the fuel gauge sending unit.
     – replacing the EVAP purge pipe.
     – replacing the EVAP canister.
     – it has been removed from the line.
     – it is damaged.

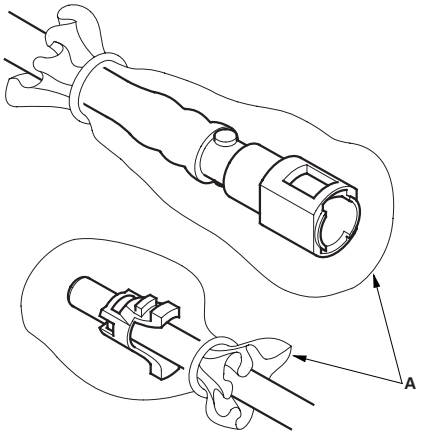

Fuel Line/Quick-Connect Fitting Installation

NOTE: Before you work on the fuel lines and fittings, read the ''Fuel Line/Quick-Connect Fitting Precautions'' (see page 11-368).

1. Check the contact area (A) of the line (B) for dirt or damage, and clean it if needed.

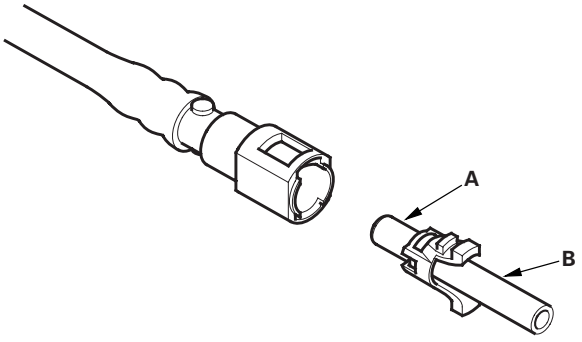

2. Insert a new retainer (A) into the connector (B) if the retainer is damaged, or after:

   - replacing the fuel rail.
   - replacing the fuel feed line.
   - replacing the fuel pump.
   - replacing the fuel filter.
   - replacing the fuel gauge sending unit.
   - replacing the EVAP purge pipe.
   - replacing the EVAP canister.
   - removing the retainer from the line.
   - Use the same manufacturer retainer and the same size retainer when the replacing the retainer (see page 11-368).

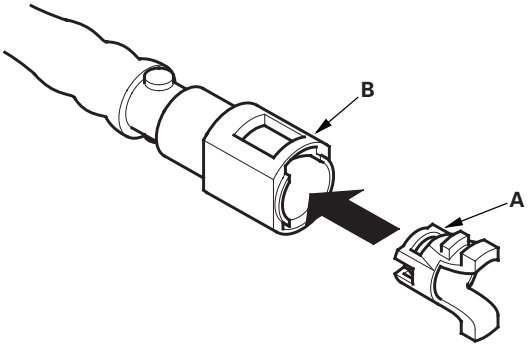

3. Before connecting a new fuel tube/quick-connect fitting assembly (A), remove the old retainer from the mating line.

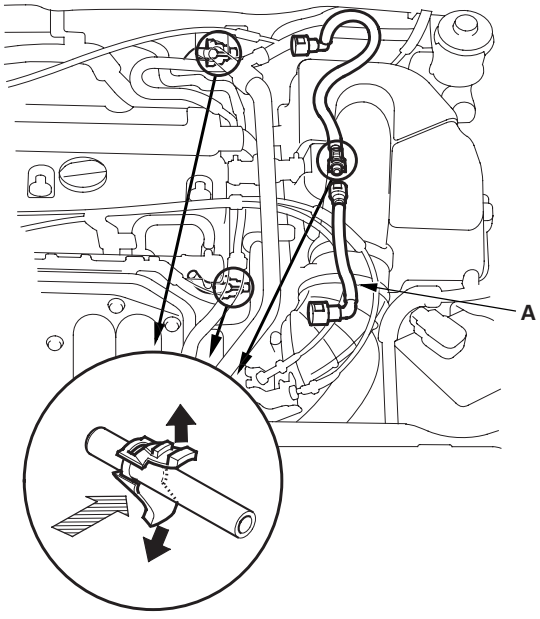

2002-2004 models

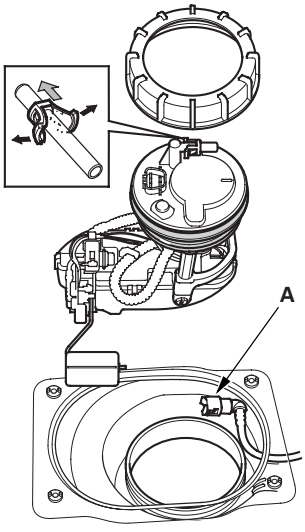

2005-2006 models

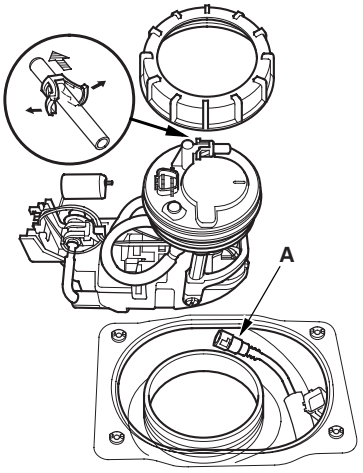

2005-2006 models

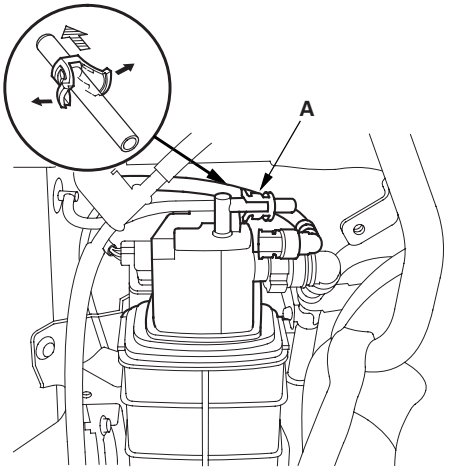

(cont'd)

Fuel Line/Quick-Connect Fitting Installation (cont'd)

4. Align the quick-connect fittings with the line (A), and align the retainer locking tabs (B) with the connector (C) grooves. Then press the quick-connect fittings onto the line until both retainer tabs lock with a clicking sound.

   NOTE: If it is hard to connect, put a small amount of new engine oil on the line end.

   Connection with new retainer

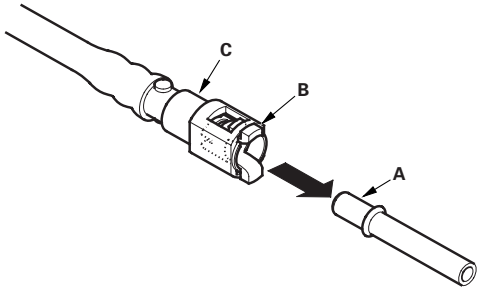

   Connection to new fuel feed line

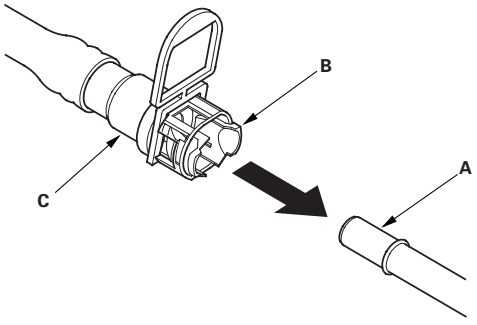

   Reconnection to existing retainer

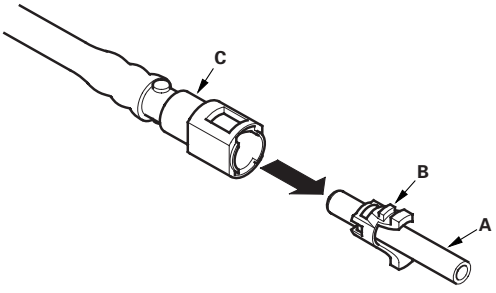

5. When you are reconnecting the connector with the old retainer, make sure the connection is secure and the tabs (A) are firmly locked into place; check visually and also by pulling the connector (B). When you are replacing the fuel line with a new one, make sure you remove the ring pull (C) upwards after you confirm the connection is secure.

   NOTE: Before you remove the ring pull, make sure the fuel line connection is secure. If the connection is not secure, the ring pull could break when you try to remove it.

   Reconnection to existing retainer

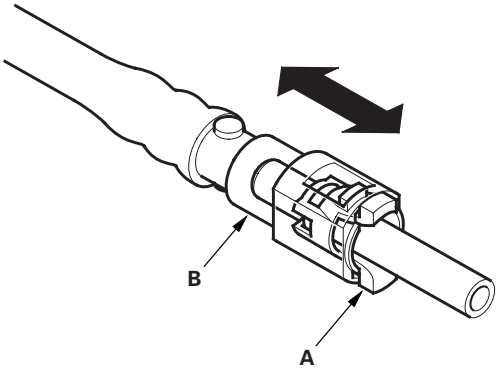

   Connection to new fuel feed line

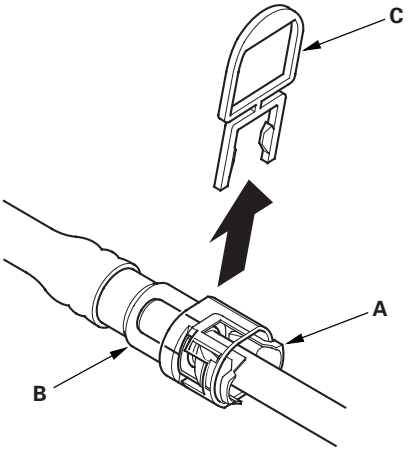

6. Reconnect the negative cable to the battery, and turn the ignition switch ON (II) (but do not operate the starter motor). The fuel pump will run for about 2 seconds, and fuel pressure will rise. Repeat two or three times, and check that there is no leakage in the fuel supply system.

Fuel Pressure Regulator Replacement

2002-2004 models

1. Remove the fuel pump (see page 11-375).
2. Remove the fuel pressure regulator (A).

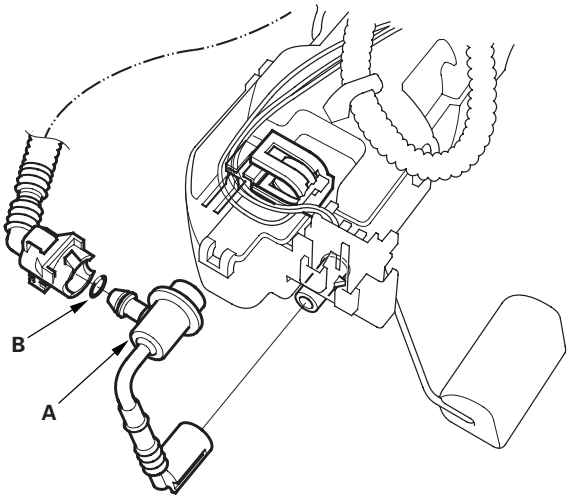

3. Install the regulator in the reverse order of removal with a new O-ring (B).

2005-2006 models

1. Remove the fuel pump (see page 11-376).
2. Remove the terminal (A) and clip (B).

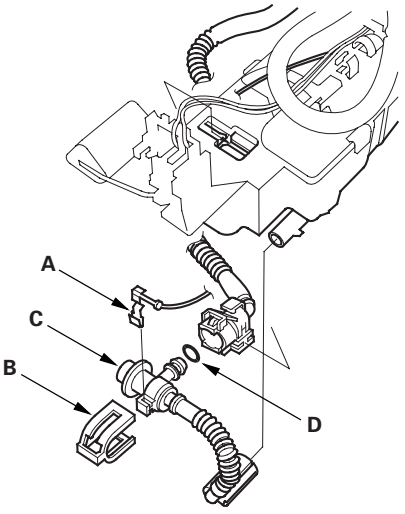

3. Remove the fuel pressure regulator (C).
4. Install the regulator in the reverse order of removal with a new O-ring (D).

Fuel Filter Replacement

2002-2004 models

The fuel filter should be replaced whenever the fuel pressure drops below the specified value (see page 11-363) after making sure that the fuel pump and the fuel pressure regulator are OK.

1. Remove the fuel tank unit (see page 11-375).

2. Remove the fuel filter set (A).

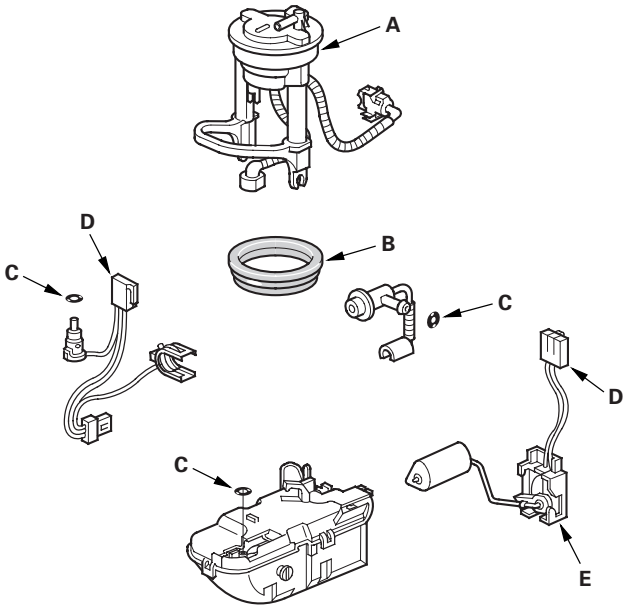

3. Install the filter in the reverse order of removal with a new base gasket (B) and new O-rings (C), then check these items:

   - When connecting the wire harness, make sure the connection is secure and the connectors (D) are firmly locked into place.
   - When installing the fuel gauge sending unit (E), make sure the connection is secure and the connector is firmly locked into place. Be careful not to bend or twist it excessively.

2005-2006 models

The fuel filter should be replaced whenever the fuel pressure drops below the specified value (see page 11-363) after making sure that the fuel pump and the fuel pressure regulator are OK.

1. Remove the fuel tank unit (see page 11-376).

2. Remove the fuel filter set (A).

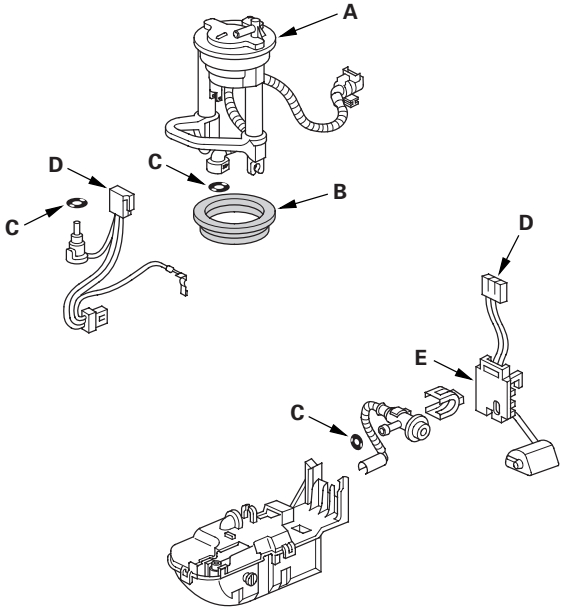

3. Install the filter in the reverse order of removal with a new base gasket (B) and new O-rings (C), then check these items:

   - When connecting the wire harness, make sure the connection is secure and the connectors (D) are firmly locked into place.
   - When installing the fuel gauge sending unit (E), make sure the connection is secure and the connector is firmly locked into place. Be careful not to bend or twist it excessively.

Fuel Pump/Fuel Gauge Sending Unit Replacement

Special Tools Required
Fuel sender wrench 07AAA-S0XA100

2002-2004 models

1. Relieve the fuel pressure (see page 11-360).
2. Remove the fuel fill cap.
3. Remove the rear seat cushion (see page 20-85).
4. Remove the access panel (A) from the floor.

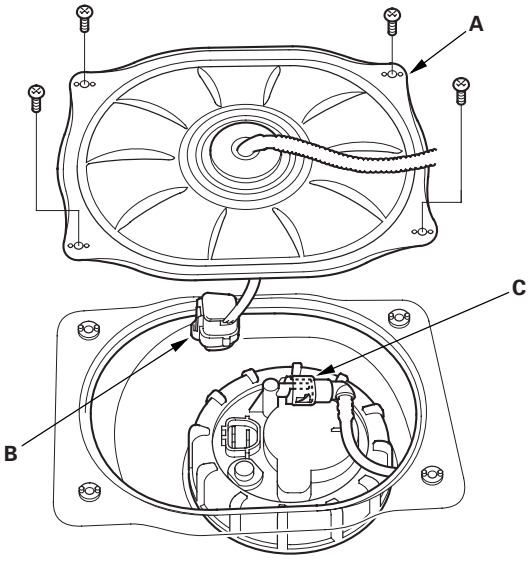

5. Disconnect the fuel pump 5P connector (B).
6. Disconnect the quick-connect fitting (C) from the fuel tank unit.
7. Using the special tool, loosen the fuel tank unit locknut (A).

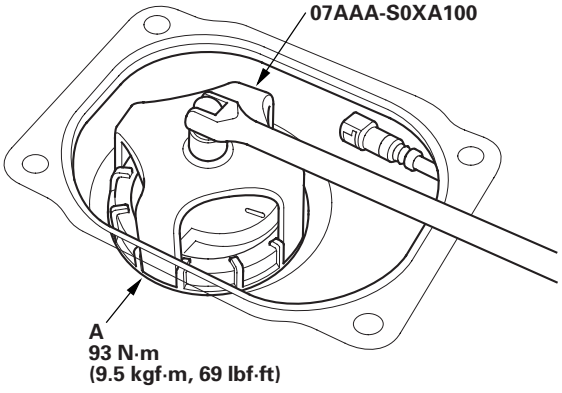

8. Remove the locknut (A) and the fuel tank unit.

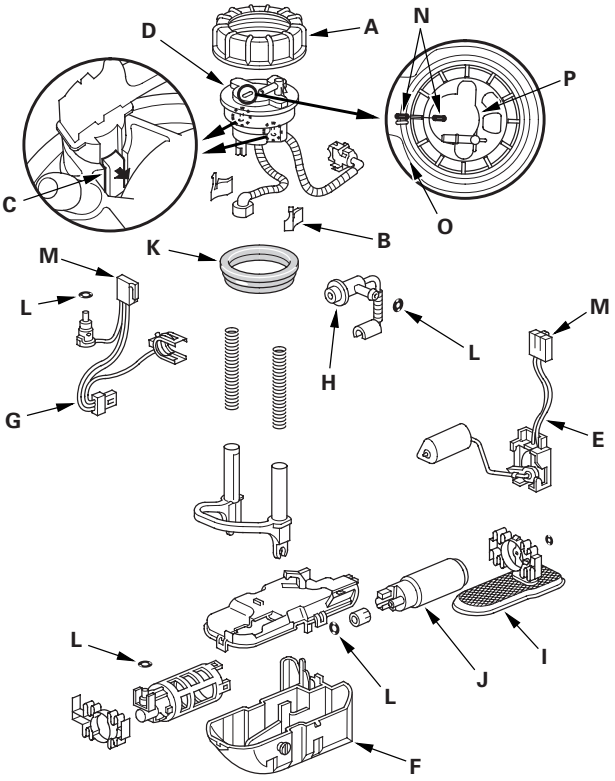

9. Remove the stop (B). Release the hook (C) and remove the fuel filter (D), the fuel gauge sending unit (E), the case (F), the wire harness (G), and the fuel pressure regulator (H).
10. When connecting the fuel tank unit, make sure the connection is secure and the suction filter (I) is firmly connected to the fuel pump (J).
11. Install the fuel tank unit in the reverse order of removal with a new locknut, a new base gasket (K) and new O-rings (L), then check these items:
    - When connecting the wire harness, make sure the connection is secure and the connector (M) is firmly locked into place.
    - When installing the fuel gauge sending unit, make sure the connection is secure and the connector (M) is firmly locked into place. Be careful not to bend or twist it excessively.
    - When installing the fuel tank unit, align the marks (N) on the fuel tank (O) and the fuel tank unit (P).

Fuel Pump/Fuel Gauge Sending Unit Replacement (cont'd)

Special Tools Required
Fuel sender wrench 07AAA-S0XA100

2005-2006 models

1. Relieve the fuel pressure (see page 11-360).
2. Remove the fuel fill cap.
3. Remove the rear seat cushion (see page 20-85).
4. Remove the access panel (A) from the floor.

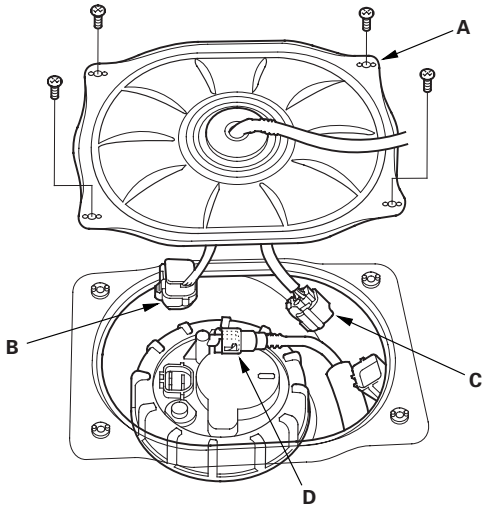

5. Disconnect the fuel pump 5P connector (B) and the EVAP canister vent shut valve and fuel tank pressure sensor subharness 6P connector (C).
6. Disconnect the quick-connect fitting (D) from the fuel tank unit.
7. Using the special tool, loosen the fuel tank unit locknut (A).

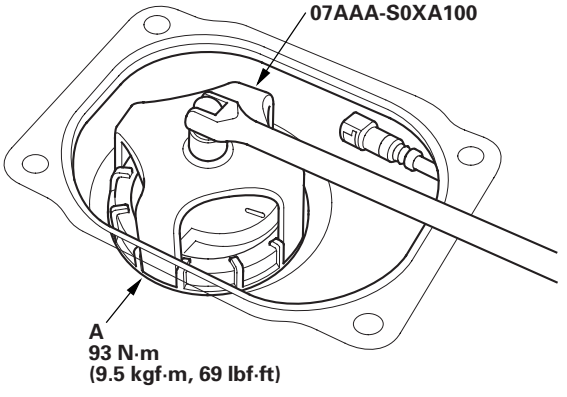

8. Remove the locknut (A) and the fuel tank unit.

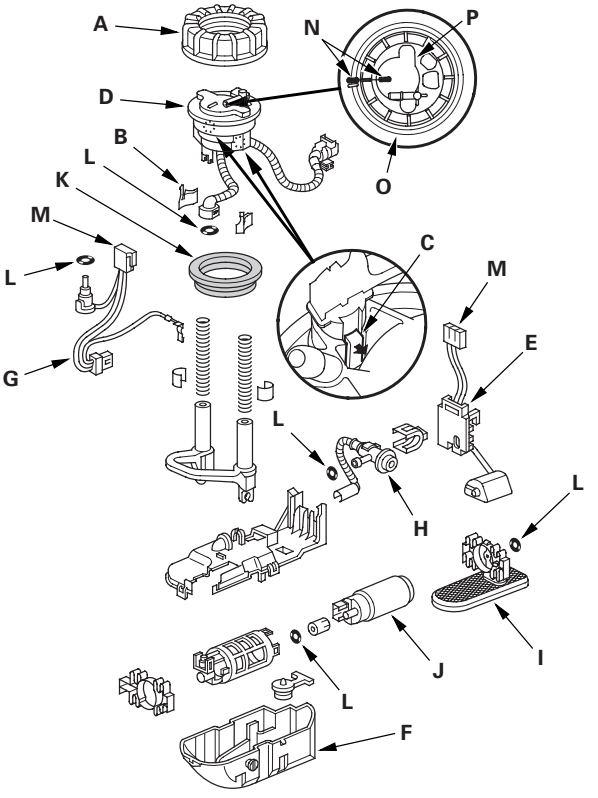

9. Remove the stop (B). Release the hook (C) and remove the fuel filter (D), the fuel gauge sending unit (E), the case (F), the wire harness (G), and the fuel pressure regulator (H).
10. When connecting the fuel tank unit, make sure the connection is secure and the suction filter (I) is firmly connected to the fuel pump (J).
11. Install the fuel tank unit in the reverse order of removal with a new locknut, a new base gasket (K) and new O-rings (L), then check these items:
    - When connecting the wire harness, make sure the connection is secure and the connectors (M) are firmly locked into place.
    - When installing the fuel gauge sending unit, make sure the connection is secure and the connector (M) is firmly locked into place. Be careful not to bend or twist it excessively.
    - When installing the fuel tank unit, align the marks (N) on the fuel tank (O) and the fuel tank unit (P).

Fuel Tank Replacement

2002-2004 models

1. Drain the fuel tank (see page 11-364).

2. Jack up the vehicle, and support it with jackstands.

3. Disconnect the fuel vapor hose and quick-connect fittings.
   Disconnect the hoses. Loosen the clamp (A). Slide back the clamps, then twist the hoses as you pull to avoid damaging them.

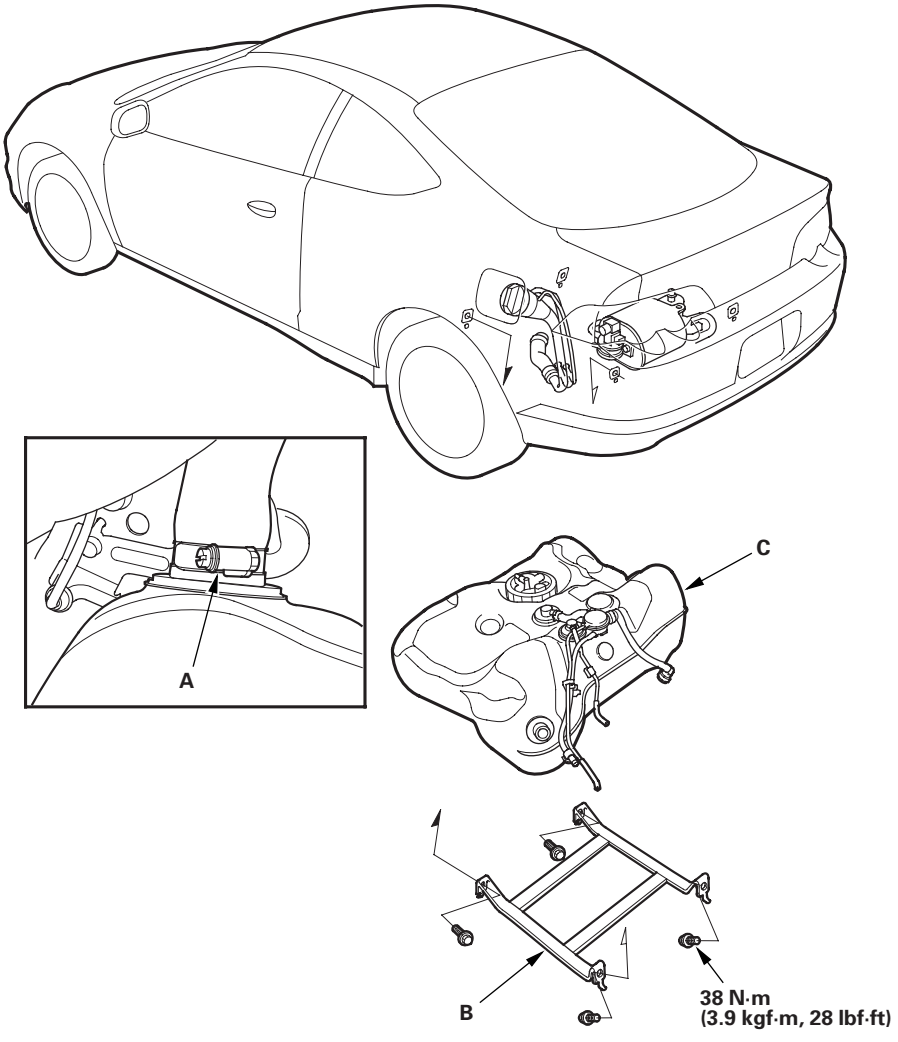

4. Place a jack, or other support, under the tank.

5. Remove the strap bolts, and let the strap (B) fall free.

6. Remove the fuel tank (C). If it sticks to the undercoat on its mount, carefully pry it off the mount.

7. Install the parts in the reverse order of removal.

Fuel Tank Replacement (cont'd)

2005-2006 models

1. Drain the fuel tank (see page 11-364).
2. Jack up the vehicle, and support it with jackstands.
3. Remove the EVAP canister cover (A).

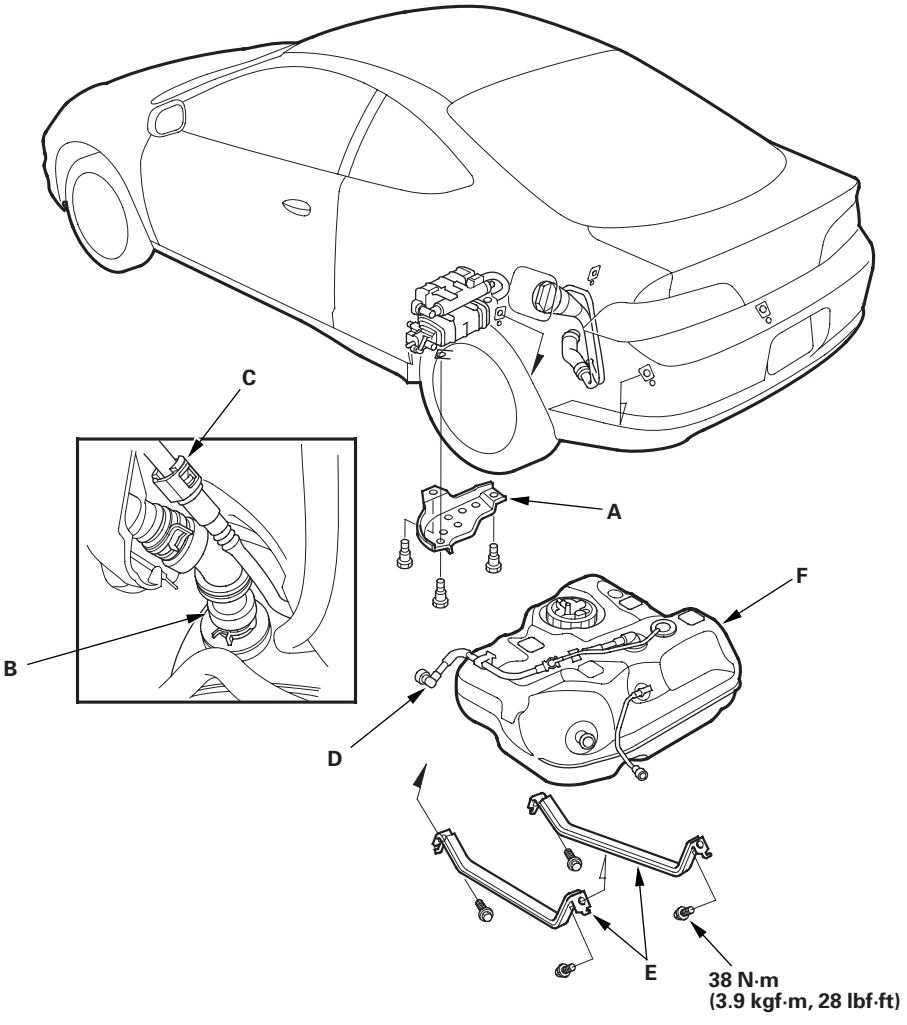

4. Disconnect the fuel fill neck tube (B) and quick-connect fitting (C).
5. Disconnect the vapor line (D) from the EVAP canister.
6. Place a jack, or other support, under the tank.
7. Remove the strap bolts, and let the straps (E) fall free.
8. Remove the fuel tank (F). If it sticks to the undercoat on its mount, carefully pry it off the mount.
9. Install the parts in the reverse order of removal.

Fuel Gauge Sending Unit Test

Special Tools Required
Fuel sender wrench 07AAA-S0XA100

NOTE: For the fuel gauge system circuit diagram, refer to the Gauges Circuit Diagram (see page 22-70).

1. Check the No. 10 METER (7.5 A) fuse in the under-dash fuse/relay box before testing.

2. Do the gauge drive circuit check (see page 22-68).

   - If the fuel gauge needle sweeps from the minimum to maximum position and then returns to the minimum position, the gauge is OK. Go to step 3.
   - If the fuel gauge needle does not sweep from the minimum to maximum position and then return to the minimum position, replace the gauge assembly and retest.

3. Turn the ignition switch OFF.

4. Remove the rear seat cushion (see page 20-85).

5. Remove the access panel (A) from the floor.

2002-2004 models

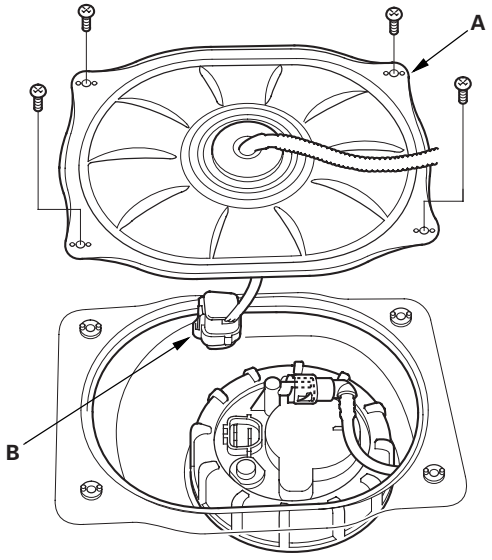

2005-2006 models

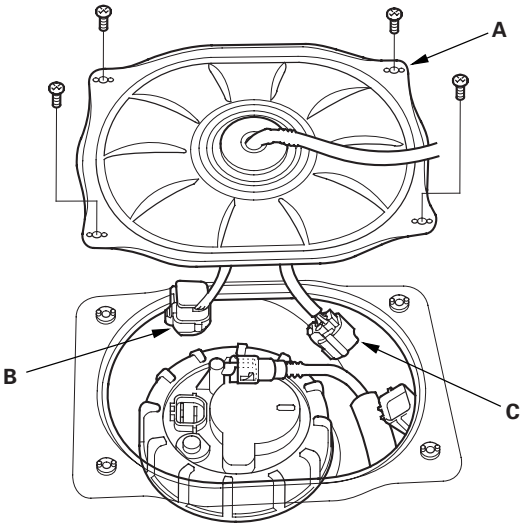

6. Disconnect the fuel pump 5P connector (B).

7. 2005-2006 models; Disconnect the EVAP canister vent shut valve and fuel tank pressure sensor subharness 6P connector (C).

(cont'd)

Fuel Gauge Sending Unit Test (cont'd)

8. Measure voltage between the fuel pump 5P connector terminals No. 1 and No. 2 with the ignition switch ON (II). There should be battery voltage.

   - If the voltage is as specified, go to step 9.
   - If the voltage is not as specified, check for:
     – a short in the YEL/BLK wire to ground.
     – an open in the YEL/BLK or BLK wire.
     – poor ground (G 501).

FUEL PUMP 5P CONNECTOR

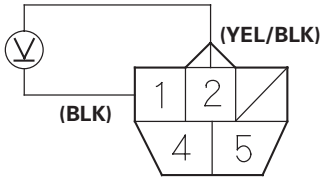

Wire side of female terminals

9. Turn the ignition switch OFF. Remove the No. 9 BACK UP (7.5 A) fuse from the under-hood fuse/relay box for at least 10 seconds, and reinstall it.

10. Install a 2 Ω resistor between the fuel pump 5P connector terminals No. 1 and No. 2, then turn the ignition switch ON (II).

FUEL PUMP 5P CONNECTOR

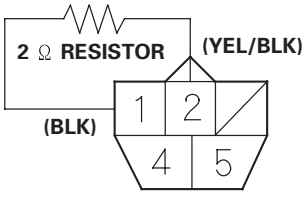

Wire side of female terminals

11. Check that the pointer of the fuel gauge indicates "F".

    - If the pointer of the fuel gauge does not indicate "F", replace the gauge.
    - If the gauge is OK, go to step 12.

    NOTE: The pointer of the fuel gauge returns to the bottom of the gauge dial when the ignition switch is OFF, regardless of the fuel level.

12. Relieve the fuel pressure (see page 11-360).

13. Remove the fuel fill cap.

14. Disconnect the quick-connect fittings from the fuel pump.

15. Using the special tool, loosen the fuel tank unit locknut (A), and remove the fuel tank unit from the fuel tank.

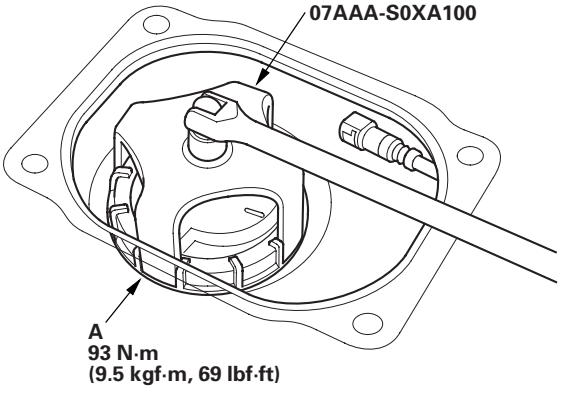

16. Measure resistance between the No. 1 and No. 2 terminals with the float at E (EMPTY), 1/2 (HALF FULL), and F (FULL) positions.
If you do not get the following readings, replace the fuel gauge sending unit, 2002-2004 models (see page 11-375), 2005-2006 models (see page 11-376).

Float Position	F	1/2	LOW	E
2002-2004 models; Resistance (Ω)	11 to 13	68.5 to 74.5	114.4 to 126.6	130 to 132
2005-2006 models; Resistance (Ω)	11 to 13	68.5 to 74.5	114.3 to 129.5	130 to 132

NOTE: Remove the No. 9 BACK UP (7.5 A) fuse from the under-hood fuse/relay box for at least 10 seconds after completing troubleshooting otherwise it may take up to 20 minutes for the fuel gauge to indicate the correct fuel level.

2002-2004 models

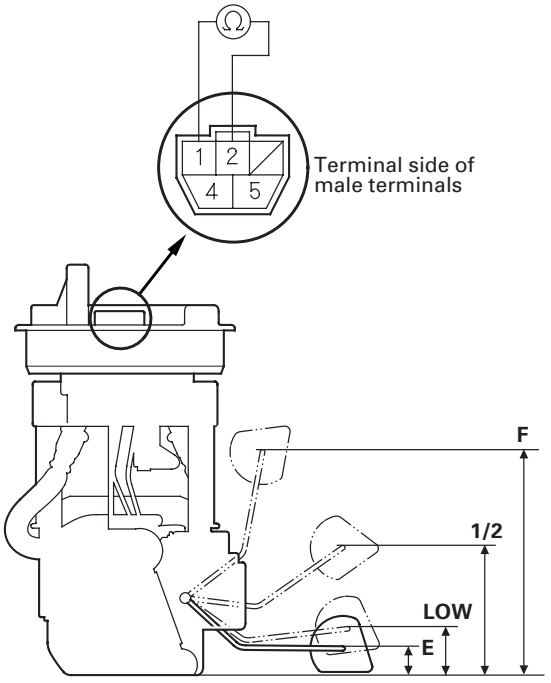

2005-2006 models

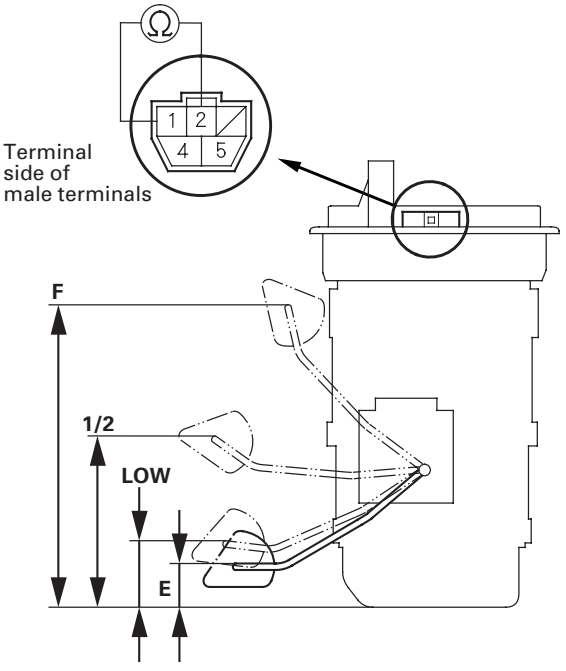

Low Fuel Indicator Test

1. Do the fuel gauge sending unit test (see page 11-379).

   - If the system is OK, go to step 2.
   - If the system has any malfunction, repair it.

2. Turn the ignition switch ON (II) with the float at the E (EMPTY) position.

   - If the low fuel indicator light is on, go to step 3.
   - If the low fuel indicator light is not on, refer to the low fuel indicator Circuit Diagram (see page 22-70) and check the circuit.

3. Lift the float above the LOW position.

   - If the low fuel indicator light goes off, the system is OK.
   - If the low fuel indicator light is still on, refer to the low fuel indicator Circuit Diagram (see page 22-70) and check the circuit.

2002-2004 models

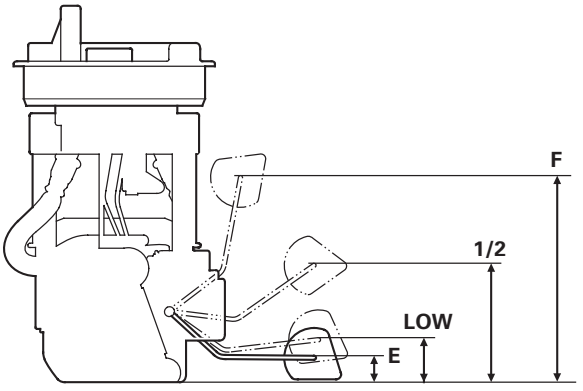

2005-2006 models

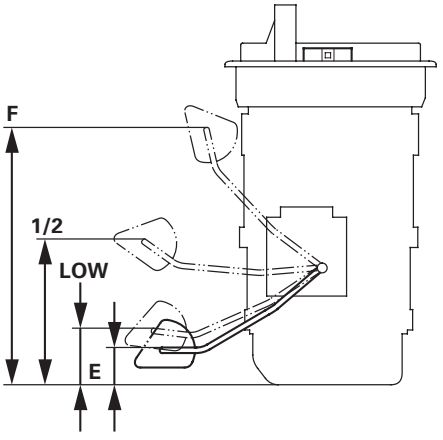

Component Location Index

K20A2/K20Z1 engines

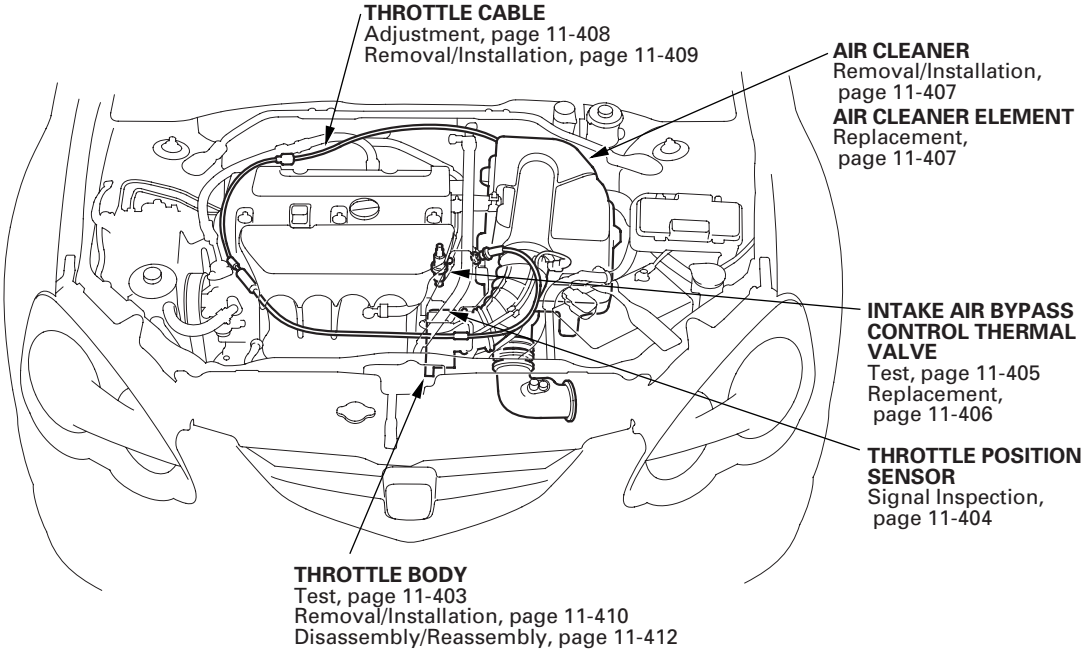

*: This illustration shows the K20A2 engine; the K20Z1 engine is similar.

K20A3 engine

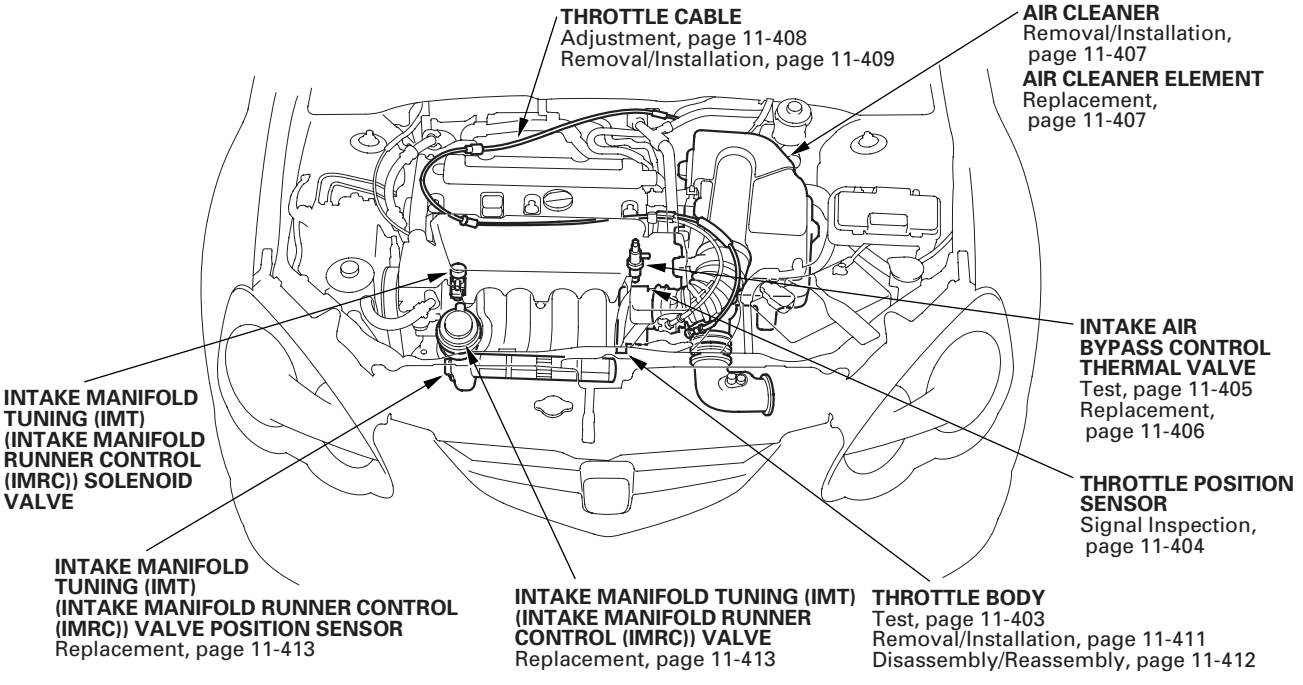

*: This illustration shows the 2002-2004 models; the 2005-2006 models is similar.

DTC Troubleshooting

DTC P0661: IMT (IMRC) Valve Position Sensor Circuit Low Voltage (2002-2004 models)

1. Reset the ECM/PCM (see page 11-4).

2. Turn the ignition switch ON (II).

   Is DTC P0661 indicated?

   YES—Go to step 3.

   NO—Intermittent failure, system is OK at this time. Check for poor connections or loose terminals at the IMT (IMRC) valve position sensor and the ECM/PCM. ■

3. Turn the ignition switch OFF.

4. Disconnect the IMT (IMRC) valve position sensor 3P connector.

5. Turn the ignition switch ON (II).

6. Measure voltage between IMT (IMRC) valve position sensor 3P connector terminals No. 1 and No. 3.

IMT (IMRC) VALVE POSITION SENSOR 3P CONNECTOR

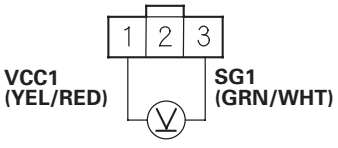

Wire side of female terminals

   Is there about 5 V?

   YES—Go to step 7.

   NO—Go to step 14.

7. Turn the ignition switch OFF.

8. At the sensor side, measure resistance between IMT (IMRC) valve position sensor 3P connector terminals No. 2 and No. 3.

IMT (IMRC) VALVE POSITION SENSOR 3P CONNECTOR

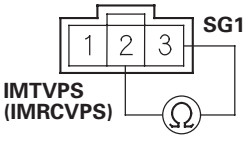

Terminal side of male terminals

   Is there about 3.2 kΩ at room temperature?

   YES—Go to step 9.

   NO—Replace the IMT (IMRC) valve position sensor (see page 11-413). ■

9. Measure resistance between IMT (IMRC) valve position sensor 3P connector terminals No. 1 and No. 2.

IMT (IMRC) VALVE POSITION SENSOR 3P CONNECTOR

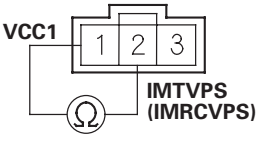

Terminal side of male terminals

   Is there about 9.5 kΩ at room temperature?

   YES—Go to step 10.

   NO—Replace the IMT (IMRC) valve position sensor (see page 11-413). ■

10. Disconnect ECM/PCM connector A (31P).

11. At the wire harness side, check for continuity between IMT (IMRC) valve position sensor 3P connector terminal No. 2 and body ground.

IMT (IMRC) VALVE POSITION SENSOR 3P CONNECTOR

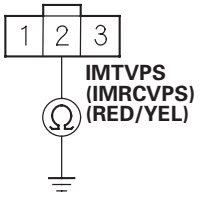

Wire side of female terminals

Is there continuity?

YES—Repair short in the wire between the ECM/PCM (A8) and the IMT (IMRC) valve position sensor. ■

NO—Go to step 12.

12. Connect ECM/PCM connector terminal A8 to body ground with a jumper wire.

ECM/PCM CONNECTOR A (31P)

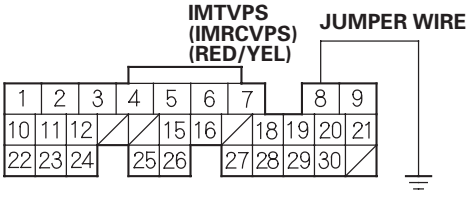

Wire side of female terminals

13. At the wire harness side, check for continuity between IMT (IMRC) valve position sensor 3P connector terminal No. 2 and body ground.

IMT (IMRC) VALVE POSITION SENSOR 3P CONNECTOR

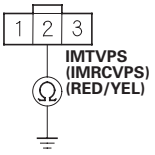

Wire side of female terminals

Is there continuity?

YES—Update the ECM/PCM if it does not have the latest software, or substitute a known-good ECM/PCM (see page 11-6), then recheck. If the symptom/indication goes away with a known-good ECM/PCM, replace the original ECM/PCM (see page 11-284). ■

NO—Repair open in the wire between the ECM/PCM (A8) and the IMT (IMRC) valve position sensor. ■

14. Measure voltage between ECM/PCM connector terminals A11 and A21.

ECM/PCM CONNECTOR A (31P)

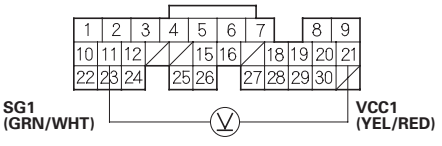

Wire side of female terminals

Is there about 5 V?

YES—Repair open in the wire between the ECM/PCM (A21) and the IMT (IMRC) valve position sensor. ■

NO—Update the ECM/PCM if it does not have the latest software, or substitute a known-good ECM/PCM (see page 11-6), then recheck. If the symptom/indication goes away with a known-good ECM/PCM, replace the original ECM/PCM (see page 11-284). ■

DTC Troubleshooting (cont'd)

DTC P0661: IMT (IMRC) Valve Position Sensor Circuit Low Voltage
(2005-2006 models)

1. Reset the ECM/PCM (see page 11-4).

2. Turn the ignition switch ON (II).

   Is DTC P0661 indicated?

   YES—Go to step 3.

   NO—Intermittent failure, system is OK at this time. Check for poor connections or loose terminals at the IMT (IMRC) valve position sensor and the ECM/PCM. ■

3. Turn the ignition switch OFF.

4. Disconnect the IMT (IMRC) valve position sensor 3P connector.

5. Turn the ignition switch ON (II).

6. Measure voltage between IMT (IMRC) valve position sensor 3P connector terminals No. 1 and No. 3.

IMT (IMRC) VALVE POSITION SENSOR 3P CONNECTOR

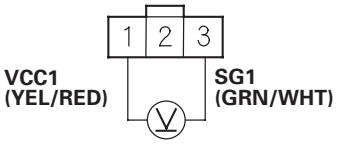

Wire side of female terminals

   Is there about 5 V?

   YES—Go to step 7.

   NO—Go to step 15.

7. Turn the ignition switch OFF.

8. At the sensor side, measure resistance between IMT (IMRC) valve position sensor 3P connector terminals No. 2 and No. 3.

IMT (IMRC) VALVE POSITION SENSOR 3P CONNECTOR

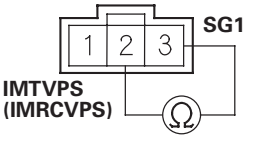

Terminal side of male terminals

   Is there about 3.2 kΩ at room temperature?

   YES—Go to step 9.

   NO—Go to step 16.

9. Measure resistance between IMT (IMRC) valve position sensor 3P connector terminals No. 1 and No. 2.

IMT (IMRC) VALVE POSITION SENSOR 3P CONNECTOR

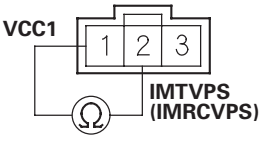

Terminal side of male terminals

   Is there about 9.5 kΩ at room temperature?

   YES—Go to step 10.

   NO—Go to step 16.

10. Jump the SCS line with the HDS.

11. Disconnect ECM/PCM connector A (31P).

12. At the wire harness side, check for continuity between IMT (IMRC) valve position sensor 3P connector terminal No. 2 and body ground.

IMT (IMRC) VALVE POSITION SENSOR 3P CONNECTOR

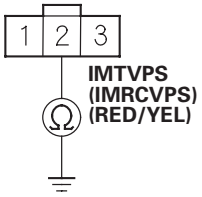

Wire side of female terminals

Is there continuity?

YES—Repair short in the wire between the ECM/PCM (B22) and the IMT (IMRC) valve position sensor, then go to step 17.

NO—Go to step 13.

13. Connect ECM/PCM connector terminal B22 to body ground with a jumper wire.

ECM/PCM CONNECTOR B (24P)

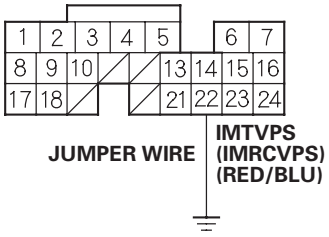

Wire side of female terminals

14. At the wire harness side, check for continuity between IMT (IMRC) valve position sensor 3P connector terminal No. 2 and body ground.

IMT (IMRC) VALVE POSITION SENSOR 3P CONNECTOR

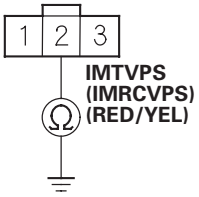

Wire side of female terminals

Is there continuity?

YES—Go to step 22.

NO—Repair open in the wire between the ECM/PCM (B22) and the IMT (IMRC) valve position sensor, then go to step 17.

15. Measure voltage between ECM/PCM connector terminals A21 and A24.

ECM/PCM CONNECTOR A (31P)

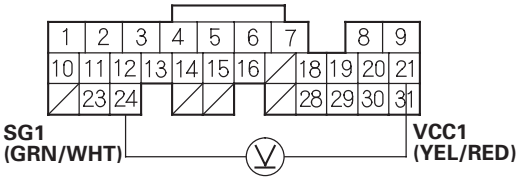

Wire side of female terminals

Is there about 5 V?

YES—Repair open in the wire between the ECM/PCM (A21) and the IMT (IMRC) valve position sensor, then go to step 17.

NO—Go to step 22.

(cont'd)

DTC Troubleshooting (cont'd)

16. Replace the IMT (IMRC) valve position sensor (see page 11-413).

17. Reconnect all connectors.

18. Turn the ignition switch ON (II).

19. Reset the ECM/PCM with the HDS.

20. Do the ECM/PCM idle learn procedure (see page 11-349).

21. Check for Temporary DTCs or DTCs with the HDS.

    Are any Temporary DTCs or DTCs indicated?

    YES—If DTC P0661 is indicated, check for poor connections or loose terminals at the IMT (IMRC) valve position sensor and the ECM/PCM, then go to step 1. If any other Temporary DTCs or DTCs are indicated, go to the indicated DTC's troubleshooting.

    NO—Troubleshooting is complete. ■

22. Update the ECM/PCM if it does not have the latest software, or substitute a known-good ECM/PCM (see page 11-6).

23. Check for Temporary DTCs or DTCs with the HDS.

    Are any Temporary DTCs or DTCs indicated?

    YES—If DTC P0661 is indicated, check for poor connections or loose terminals at the IMT (IMRC) valve position sensor and the ECM/PCM, then go to step 1. If any other Temporary DTCs or DTCs are indicated, go to the indicated DTC's troubleshooting.

    NO—If the ECM/PCM was updated, troubleshooting is complete. If the ECM/PCM was substituted, replace the original ECM/PCM (see page 11-284). ■

DTC P0662: IMT (IMRC) Valve Position Sensor Circuit High Voltage (2002-2004 models)

1. Reset the ECM/PCM (see page 11-4).

2. Turn the ignition switch ON (II).

   Is DTC P0662 indicated?

   YES—Go to step 3.

   NO—Intermittent failure, system is OK at this time. Check for poor connections or loose terminals at the IMT (IMRC) valve position sensor and the ECM/PCM. ■

3. Turn the ignition switch OFF.

4. Disconnect the IMT (IMRC) valve position sensor 3P connector.

5. Turn the ignition switch ON (II).

6. At the wire harness side, measure voltage between IMT (IMRC) valve position sensor 3P connector terminals No. 1 and No. 3.

IMT (IMRC) VALVE POSITION SENSOR 3P CONNECTOR

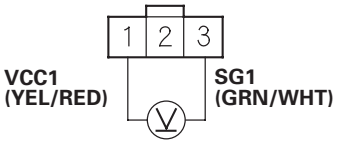

Wire side of female terminals

Is there about 5 V?

YES—Replace the IMT (IMRC) valve position sensor (see page 11-413). ■

NO—Go to step 7.

7. Measure voltage between ECM/PCM connector terminals A11 and A21.

ECM/PCM CONNECTOR A (31P)

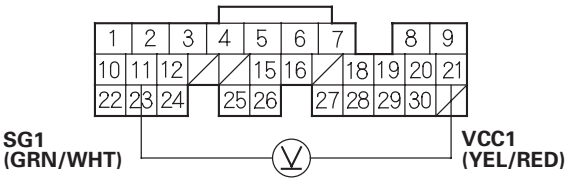

Wire side of female terminals

Is there about 5 V?

YES—Repair open in the wire between the ECM/PCM (A11) and the IMT (IMRC) valve position sensor. ■

NO—Update the ECM/PCM if it does not have the latest software, or substitute a known-good ECM/PCM (see page 11-6), then recheck. If the symptom/indication goes away with a known-good ECM/PCM, replace the original ECM/PCM (see page 11-284). ■

DTC Troubleshooting (cont'd)

DTC P0662: IMT (IMRC) Valve Position Sensor Circuit High Voltage
(2005-2006 models)

1. Reset the ECM/PCM (see page 11-4).

2. Turn the ignition switch ON (II).

   Is DTC P0662 indicated?

   YES—Go to step 3.

   NO—Intermittent failure, system is OK at this time. Check for poor connections or loose terminals at the IMT (IMRC) valve position sensor and the ECM/PCM. ■

3. Turn the ignition switch OFF.

4. Disconnect the IMT (IMRC) valve position sensor 3P connector.

5. Turn the ignition switch ON (II).

6. At the wire harness side, measure voltage between IMT (IMRC) valve position sensor 3P connector terminals No. 1 and No. 3.

IMT (IMRC) VALVE POSITION SENSOR 3P CONNECTOR

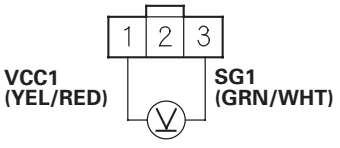

Wire side of female terminals

Is there about 5 V?

YES—Go to step 8.

NO—Go to step 7.

7. Measure voltage between ECM/PCM connector terminals A21 and A24.

ECM/PCM CONNECTOR A (31P)

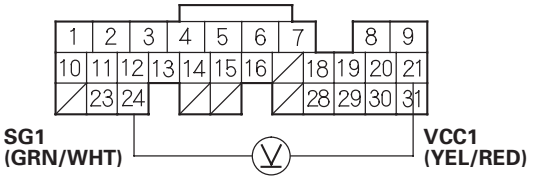

Wire side of female terminals

Is there about 5 V?

YES—Repair open in the wire between the ECM/PCM (A24) and the IMT (IMRC) valve position sensor, then go to step 10.

NO—Go to step 15.

8. Turn the ignition switch OFF.

9. Replace the IMT (IMRC) valve position sensor (see page 11-413).

10. Reconnect all connectors.

11. Turn the ignition switch ON (II).

12. Reset the ECM/PCM with the HDS.

13. Do the ECM/PCM idle learn procedure (see page 11-349).

14. Check for Temporary DTCs or DTCs with the HDS.

    Are any Temporary DTCs or DTCs indicated?

    YES—If DTC P0662 is indicated, check for poor connections or loose terminals at the IMT (IMRC) valve position sensor and the ECM/PCM, then go to step 1. If any other Temporary DTCs or DTCs are indicated, go to the indicated DTC's troubleshooting.

    NO—Troubleshooting is complete. ■

15. Update the ECM/PCM if it does not have the latest software, or substitute a known-good ECM/PCM (see page 11-6).

16. Check for Temporary DTCs or DTCs with the HDS.

    Are any Temporary DTCs or DTCs indicated?

    YES—If DTC P0662 is indicated, check for poor connections or loose terminals at the IMT (IMRC) valve position sensor and the ECM/PCM, then go to step 1. If any other Temporary DTCs or DTCs are indicated, go to the indicated DTC's troubleshooting.

    NO—If the ECM/PCM was updated, troubleshooting is complete. If the ECM/PCM was substituted, replace the original ECM/PCM (see page 11-284). ■

DTC Troubleshooting (cont'd)

DTC P1077: IMT (IMRC) System Malfunction (Low rpm) Stuck Short (2002-2004 models)

Special Tools Required
Vacuum pump/gauge, 0—30 in.Hg, Snap-on YA4000A or equivalent, commercially available

1. Reset the ECM/PCM (see page 11-4).

2. Start the engine. Hold the engine speed at 3,000 rpm without load (in Park or neutral) until the radiator fan comes on.

   Is DTC P1077 indicated?

   YES—Go to step 3.

   NO—Intermittent failure, system is OK at this time. Check for poor connections or loose terminals at the intake manifold tuning (IMT) (intake manifold runner control (IMRC)) solenoid valve and the ECM/PCM. ■

3. Disconnect the vacuum hose (A) from the intake manifold tuning (IMT) (intake manifold runner control (IMRC)) actuator (B), and connect the vacuum pump/gauge, 0—30 in.Hg, to the hose.

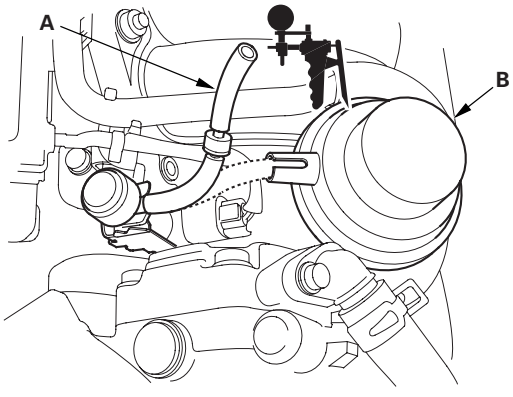

   Is there vacuum?

   YES—Go to step 11.

   NO—Go to step 4.

4. Check the vacuum hose between the IMT (IMRC) actuator and the IMT (IMRC) solenoid valve.

   Is the vacuum hose OK?

   YES—Go to step 5.

   NO—Repair the blockage or vacuum leak between the IMT (IMRC) actuator and the IMT (IMRC) solenoid valve. ■

5. Disconnect the lower vacuum hose (A) from the IMT (IMRC) solenoid valve (B), and connect the vacuum pump/gauge, 0—30 in.Hg, to the hose.

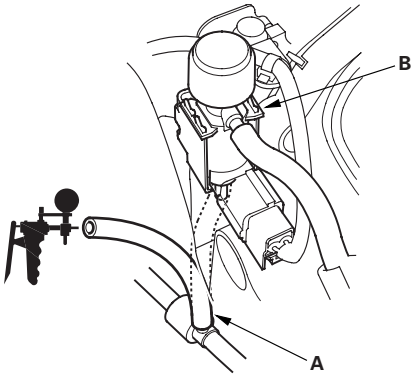

   Is there vacuum?

   YES—Go to step 6.

   NO—Repair the blockage or vacuum leak between the intake manifold and the IMT (IMRC) solenoid valve. ■

6. Reconnect the lower vacuum hose to the IMT (IMRC) solenoid valve, and connect the vacuum pump/gauge, 0—30 in.Hg, to the vacuum hose (A).

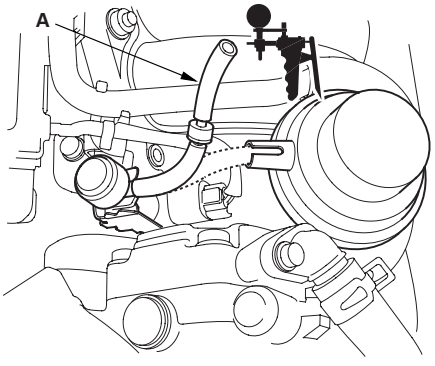

7. Disconnect the IMT (IMRC) solenoid valve 2P connector.

   Is there vacuum?

   YES—Go to step 8.

   NO—Replace the IMT (IMRC) solenoid valve. ■

8. Turn the ignition switch OFF.

9. Disconnect ECM/PCM connector B (24P).

10. Check for continuity between IMT (IMRC) solenoid valve 2P connector terminal No. 2 and body ground.

IMT (IMRC) SOLENOID VALVE 2P CONNECTOR

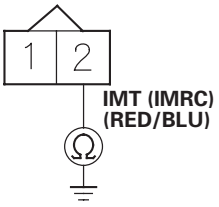

Wire side of female terminals

   Is there continuity?

   YES—Repair short in the wire between the ECM/PCM (B22) and the IMT (IMRC) solenoid valve. ■

   NO—Update the ECM/PCM if it does not have the latest software, or substitute a known-good ECM/PCM (see page 11-6), then recheck. If the symptom/indication goes away with a known-good ECM/PCM, replace the original ECM/PCM (see page 11-284). ■

11. Turn the ignition switch OFF.

12. Connect the vacuum pump/gauge, 0—30 in.Hg, to the IMT (IMRC) actuator (A), then apply vacuum.

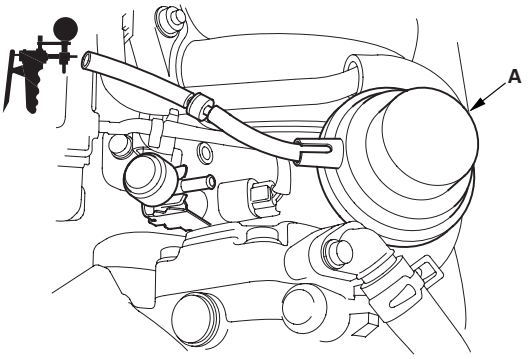

   Does the IMT (IMRC) actuator hold vacuum?

   YES—Go to step 13.

   NO—Replace the IMT (IMRC) valve assembly (see page 11-413). ■

13. Disconnect the IMT (IMRC) valve position sensor 3P connector.

14. At the sensor side, measure resistance between IMT (IMRC) valve position sensor 3P connector terminals No. 2 and No. 3 while applying vacuum to the IMT (IMRC) actuator.

IMT (IMRC) VALVE POSITION SENSOR 3P CONNECTOR

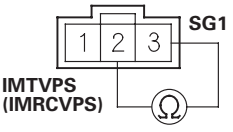

Terminal side of male terminals

   Is there about 9.5 kΩ at room temperature?

   YES—Update the ECM/PCM if it does not have the latest software, or substitute a known-good ECM/PCM (see page 11-6), then recheck. If the symptom/indication goes away with a known-good ECM/PCM, replace the original ECM/PCM (see page 11-284). ■

   NO—Replace the IMT (IMRC) valve assembly (see page 11-413). ■

DTC Troubleshooting (cont'd)

DTC P1077: IMT (IMRC) System Malfunction (Low rpm) Stuck Short (2005-2006 models)

Special Tools Required
Vacuum pump/gauge, 0—30 in.Hg, Snap-on YA4000A or equivalent, commercially available

1. Start the engine. Hold the engine speed at 3,000 rpm without load (in Park or neutral) until the radiator fan comes on, then let it idle.

2. Do the IMT (IMRC) TEST in the INSPECTION MENU with the HDS.

   Is the result OK?

   YES—Intermittent failure, system is OK at this time. Check for poor connections or loose terminals at the intake manifold tuning (IMT) (intake manifold runner control (IMRC)) solenoid valve and the ECM/PCM. ■

   NO—Go to step 3.

3. Turn the ignition switch OFF.

4. Check the vacuum hose and the hose connectors between the IMT (IMRC) actuator and the IMT (IMRC) solenoid valve.

   Are the vacuum hose and the hose connectors OK?

   YES—Go to step 5.

   NO—Repair the blockage or vacuum leak between the IMT (IMRC) actuator and the IMT (IMRC) solenoid valve, then go to step 27.

5. Disconnect the vacuum hose (A) from the IMT (IMRC) actuator (B), and connect the vacuum pump/gauge, 0—30 in.Hg, to the hose.

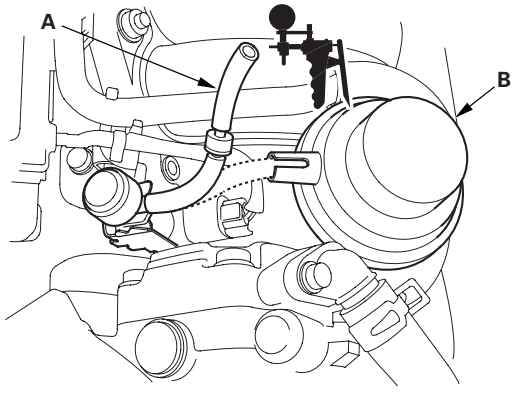

6. Start the engine.

7. Measure the vacuum.

   Is there vacuum?

   YES—Go to step 8.

   NO—Go to step 13.

8. Turn the ignition switch OFF.

9. Reconnect the vacuum hose to the IMT (IMRC) actuator.

10. Disconnect the vacuum hose (A) from the IMT (IMRC) solenoid valve (B), and connect the vacuum pump/gauge, 0—30 in.Hg, to the hose.

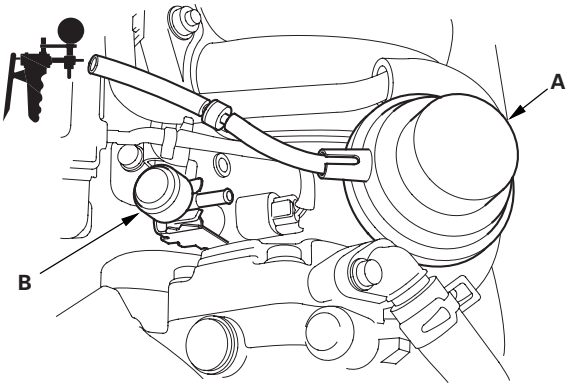

Does the IMT (IMRC) actuator hold vacuum?

YES—Go to step 11.

NO—Replace the IMT (IMRC) valve (see page 11-413), then go to step 27.

11. Do the IMT (IMRC) TEST in the INSPECTION MENU with the HDS.

12. Apply 28 kPa (8.27 in.Hg, 210 mmHg) of vacuum to the hose.

Does the reading on the HDS change?

YES—Go to step 34.

NO—Replace the IMT (IMRC) valve (see page 11-413), then go to step 27.

13. Turn the ignition switch OFF.

14. Connect the vacuum hose to the IMT (IMRC) actuator.

15. Disconnect the lower vacuum hose (A) from the IMT (IMRC) solenoid valve (B), and connect the vacuum pump/gauge, 0—30 in.Hg, to the hose.

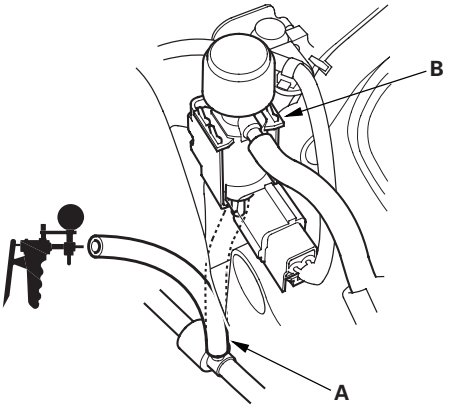

16. Start the engine.

17. Measure the vacuum.

Is there vacuum?

YES—Go to step 20.

NO—Go to step 18.

18. Turn the ignition switch OFF.

19. Check the vacuum hose and the hose connectors between the intake manifold and the IMT (IMRC) solenoid valve.

Are the vacuum hose and the hose connectors OK?

YES—Replace the intake manifold, K20Z1 engine (see page 9-8), K20A3 engine (see page 9-2), then go to step 27.

NO—Repair the blockage or vacuum leak between the intake manifold and the IMT (IMRC) solenoid valve, then go to step 27.

(cont'd)

DTC Troubleshooting (cont'd)

20. Turn the ignition switch OFF.

21. Disconnect the IMT (IMRC) solenoid valve 2P connector.

22. Check for continuity between IMT (IMRC) solenoid valve 2P connector terminal No. 2 and body ground.

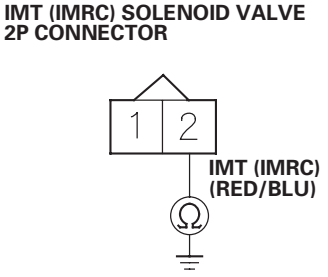

Wire side of female terminals

Is there continuity?

YES—Go to step 23.

NO—Replace the IMT (IMRC) solenoid valve (see page 11-413), then go to step 27.

23. Turn the ignition switch OFF.

24. Jump the SCS line with the HDS.

25. Disconnect ECM/PCM connector A (31P).

26. Check for continuity between IMT (IMRC) solenoid valve 2P connector terminal No. 2 and body ground.

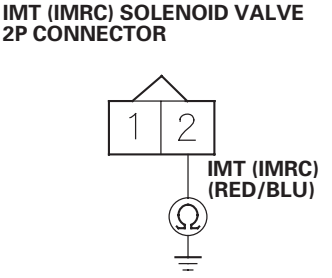

Wire side of female terminals

Is there continuity?

YES—Repair short in the wire between the IMT (IMRC) solenoid valve and the ECM/PCM (A11), then go to step 27.

NO—Go to step 34.

27. Reconnect all connectors.

28. Turn the ignition switch ON (II).

29. Reset the ECM/PCM with the HDS.

30. Do the ECM/PCM idle learn procedure (see page 11-349).

31. Do the IMT (IMRC) TEST in the INSPECTION MENU with the HDS.

32. Check for Temporary DTCs or DTCs with the HDS.

    Are any Temporary DTCs or DTCs indicated?

    YES—If DTC P1077 is indicated, check for poor connections or loose terminals at the IMT (IMRC) solenoid valve and the ECM/PCM, then go to step 1. If any other Temporary DTCs or DTCs are indicated, go to the indicated DTC's troubleshooting.

    NO—Go to step 33.

33. Monitor the OBD STATUS for DTC P1077 in the DTCs MENU with the HDS.

    Does the screen indicate PASSED?

    YES—Troubleshooting is complete. ■

    NO—If the screen indicates FAILED, check for poor connections or loose terminals at the IMT (IMRC) solenoid valve and the ECM/PCM, then go to step 1. If the screen indicates NOT COMPLETED, go to step 30 and recheck.

34. Update the ECM/PCM if it does not have the latest software, or substitute a known-good ECM/PCM (see page 11-6).

35. Check for Temporary DTCs or DTCs with the HDS.

    Are any Temporary DTCs or DTCs indicated?

    YES—If DTC P1077 is indicated, check for poor connections or loose terminals at the IMT (IMRC) solenoid valve and the ECM/PCM, then go to step 1. If any other Temporary DTCs or DTCs are indicated, go to the indicated DTC's troubleshooting.

    NO—If the ECM/PCM was updated, troubleshooting is complete. If the ECM/PCM was substituted, replace the original ECM/PCM (see page 11-284). ■

DTC Troubleshooting (cont'd)

DTC P1078: IMT (IMRC) System Malfunction (High rpm) Stuck Long (2002-2004 models)

Special Tools Required
Vacuum pump/gauge, 0—30 in.Hg, Snap-on YA4000A or equivalent, commercially available

1. Reset the ECM/PCM (see page 11-4).

2. Start the engine. Hold the engine speed at 3,000 rpm without load (in Park or neutral) until the radiator fan comes on.

3. Raise the engine speed to 5,000 rpm.

   Is DTC P1078 indicated?

   YES—Go to step 4.

   NO—Intermittent failure, system is OK at this time. Check for poor connections or loose terminals at the intake manifold tuning (IMT) (intake manifold runner control (IMRC)) solenoid valve and the ECM/PCM. ■

4. Disconnect the vacuum hose (A) from the intake manifold tuning (IMT) (intake manifold runner control (IMRC)) actuator (B), and connect the vacuum pump/gauge, 0—30 in.Hg, to the hose.

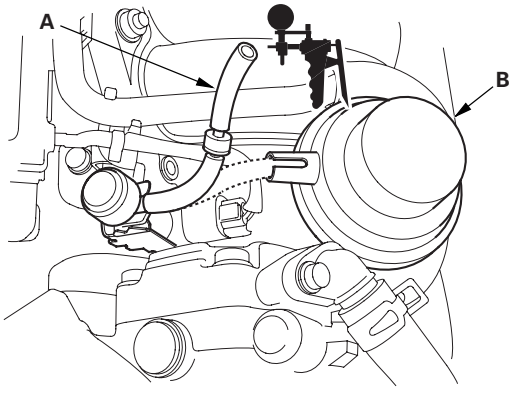

5. Raise the engine speed to 5,000 rpm.

   Is there vacuum?

   YES—Go to step 6.

   NO—Go to step 15.

6. Turn the ignition switch OFF.

7. Disconnect the IMT (IMRC) solenoid valve 2P connector.

8. Start the engine.

9. Raise the engine speed to 5,000 rpm, then measure voltage between IMT (IMRC) solenoid valve 2P connector terminals No. 1 and No. 2.

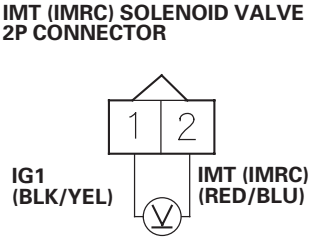

Wire side of female terminals

Is there battery voltage?

YES—Replace the IMT (IMRC) solenoid valve. ■

NO—Go to step 10.

10. Measure voltage between IMT (IMRC) solenoid valve 2P connector terminal No.1 and body ground.

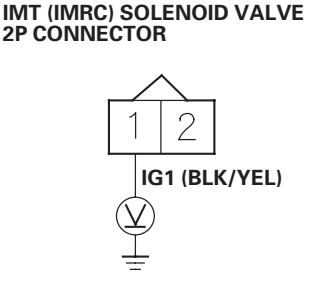

Wire side of female terminals

Is there battery voltage?

YES—Go to step 11.

NO—Check the No. 4 ACG (10 A) fuse in the under-dash fuse/relay box. If the fuse OK, repair open in the wire between the IMT (IMRC) solenoid valve and the No. 4 ACG (10 A) fuse. ■

11. Turn the ignition switch OFF.

12. Disconnect ECM/PCM connector B (24P).

13. Connect IMT (IMRC) solenoid valve 2P connector terminal No. 2 to body ground with a jumper wire.

IMT (IMRC) SOLENOID VALVE 2P CONNECTOR

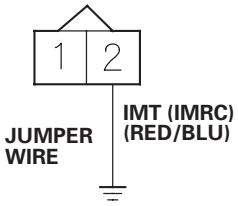

Wire side of female terminals

14. Check for continuity between ECM/PCM connector terminal B22 and body ground.

ECM/PCM CONNECTOR B (24P)

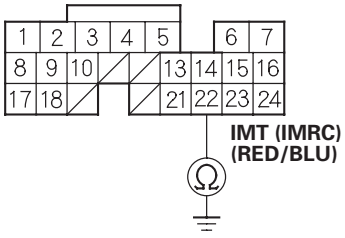

Wire side of female terminals

Is there continuity?

YES—Update the ECM/PCM if it does not have the latest software, or substitute a known-good ECM/PCM (see page 11-6), then recheck. If the symptom/indication goes away with a known-good ECM/PCM, replace the original ECM/PCM (see page 11-284). ■

NO—Repair open in the wire between the ECM/PCM (B22) and the IMT (IMRC) solenoid valve. ■

15. Turn the ignition switch OFF.

16. Connect the vacuum pump/gauge, 0—30 in.Hg, to the IMT (IMRC) actuator (A), then apply vacuum.

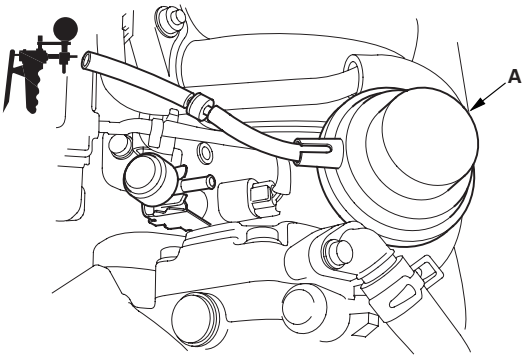

Does the IMT (IMRC) actuator hold vacuum?

YES—Go to step 17.

NO—Replace the IMT (IMRC) valve assembly (see page 11-413). ■

17. Disconnect the IMT (IMRC) valve position sensor 3P connector.

18. At the sensor side, measure resistance between IMT (IMRC) valve position sensor 3P connector terminals No. 2 and No. 3.

IMT (IMRC) VALVE POSITION SENSOR 3P CONNECTOR

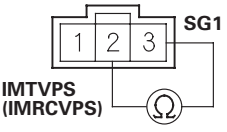

Terminal side of male terminals

Is there about 3.2 kΩ at room temperature?

YES—Update the ECM/PCM if it does not have the latest software, or substitute a known-good ECM/PCM (see page 11-6), then recheck. If the symptom/indication goes away with a known-good ECM/PCM, replace the original ECM/PCM (see page 11-284). ■

NO—Replace the IMT (IMRC) valve assembly (see page 11-413). ■

DTC Troubleshooting (cont'd)

DTC P1078: IMT (IMRC) System Malfunction (High rpm) Stuck Long (2005-2006 models)

Special Tools Required
Vacuum pump/gauge, 0—30 in.Hg, Snap-on YA4000A or equivalent, commercially available

1. Reset the ECM/PCM with the HDS.

2. Start the engine. Hold the engine speed at 3,000 rpm without load (in Park or neutral) until the radiator fan comes on, then let it idle.

3. Do the IMT (IMRC) TEST in the INSPECTION MENU with the HDS.

   Is the result OK?

   YES—Intermittent failure, systems OK at this time. Check for poor connections or loose terminals at the intake manifold tuning (IMT) (intake manifold runner control (IMRC)) solenoid valve and the ECM/PCM. ■

   NO—Go to step 4.

4. Turn the ignition switch OFF.

5. Disconnect the vacuum hose (A) from the IMT (IMRC) actuator (B), and connect the vacuum pump/gauge, 0—30 in. Hg, to the hose.

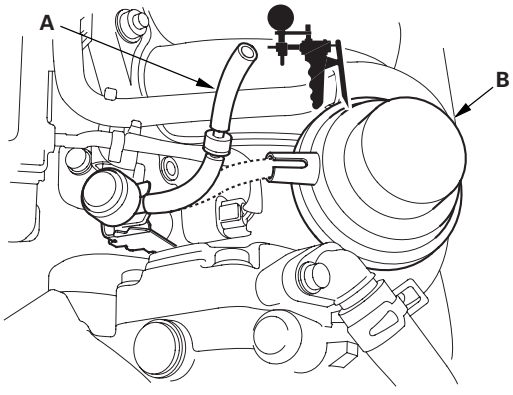

6. Start the engine.

7. Do the IMT (IMRC) TEST in the INSPECTION MENU with the HDS.

   Is about 101 kPa (29.9 in.Hg, 760 mmHg), or about 2.9 V at sea levle indicated with in 5 seconds?

   YES—Replace the IMT (IMRC) solenoid valve (see page 11-413), then go to step 21.

   NO—Go to step 8.

8. Apply vacuum using the vacuum pump/gauge, 0—30 in.Hg, to the hose (A).

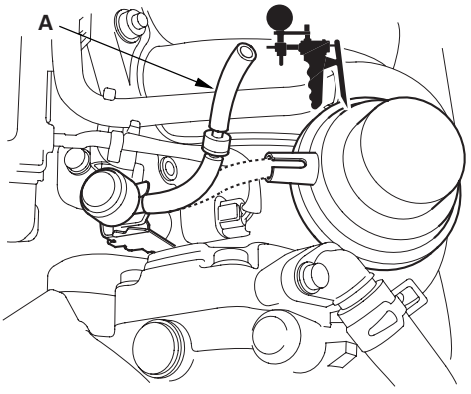

9. Do the IMT (IMRC) TEST in the INSPECTION MENU with the HDS,

   Does the IMT (IMRC) solenoid valve hold vacuum?

   YES—Check for a restricted air cleaner element (see page 11-407). If necessary, replace the IMT (IMRC) solenoid valve (see page 11-413), then go to step 21.

   NO—Go to step 10.

10. Turn the ignition switch OFF.

11. Disconnect the IMT (IMRC) solenoid valve 2P connector.

12. Turn the ignition switch ON (II).

13. Measure voltage between IMT (IMRC) solenoid valve 2P connector terminal No. 1 and body ground.

IMT (IMRC) SOLENOID VALVE 2P CONNECTOR

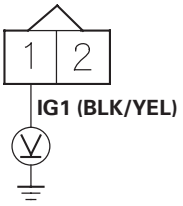

Wire side of female terminals

Is there battery voltage?

YES—Go to step 14.

NO—Repair open in the wire between the IMT (IMRC) solenoid valve and the No. 4 ACG (10 A) fuse in the under-dash fuse/relay box, then go to step 20.

14. Turn the ignition switch OFF.

15. Jump the SCS line with the HDS.

16. Disconnect ECM/PCM connector A (31P).

17. Connect IMT (IMRC) solenoid valve 2P connector terminal No. 2 to body ground with a jumper wire.

IMT (IMRC) SOLENOID VALVE 2P CONNECTOR

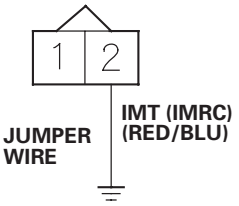

Wire side of female terminals

18. Check for continuity between ECM/PCM connector terminal A11 and body ground.

ECM/PCM CONNECTOR A (31P)

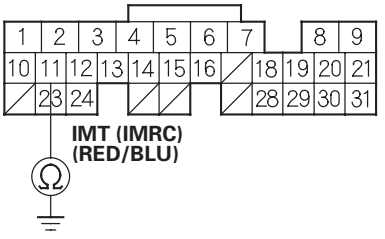

Wire side of female terminals

Is there continuity?

YES—Go to step 19.

NO—Repair open in the wire between the ECM/PCM (A11) and the IMT (IMRC) solenoid valve, then go to step 20.

(cont'd)

DTC Troubleshooting (cont'd)

19. At the sensor side, measure resistance between IMT (IMRC) solenoid valve 2P connector terminals No. 1 and No. 2.

IMT (IMRC) SOLENOID VALVE 2P CONNECTOR

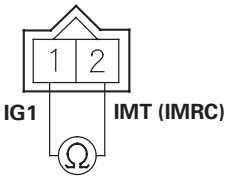

Terminal side of male terminals

Is there about 45 Ω at room temperature?

YES—Go to step 26.

NO—Replace the IMT (IMRC) solenoid valve (see page 11-413), then go to step 20.

20. Reconnect all connectors.

21. Turn the ignition switch ON (II).

22. Reset the ECM/PCM with the HDS.

23. Do the ECM/PCM idle learn procedure (see page 11-349).

24. Check for Temporary DTCs or DTCs with the HDS.

Are any Temporary DTCs or DTCs indicated?

YES—If DTC P1078 is indicated, check for poor connections or loose terminals at the IMT (IMRC) solenoid valve and the ECM/PCM, then go to step 1. If any other Temporary DTCs or DTCs are indicated, go to the indicated DTC's troubleshooting.

NO—Go to step 25.

25. Monitor the OBD STATUS for DTC P1078 in the DTCs MENU with the HDS.

Does the screen indicate PASSED?

YES—Troubleshooting is complete. ■

NO—If the screen indicates FAILED, check for poor connections or loose terminals at the IMT (IMRC) solenoid valve and the ECM/PCM, then go to step 1. If the screen indicates NOT COMPLETED, go to step 23 and recheck.

26. Update the ECM/PCM if it does not have the latest software, or substitute a known-good ECM/PCM (see page 11-6).

27. Check for Temporary DTCs or DTCs with the HDS.

Are any Temporary DTCs or DTCs indicated?

YES—If DTC P1078 is indicated, check for poor connections or loose terminals at the IMT (IMRC) solenoid valve and the ECM/PCM, then go to step 1. If any other Temporary DTCs or DTCs are indicated, go to the indicated DTC's troubleshooting.

NO—If the ECM/PCM was updated, troubleshooting is complete. If the ECM/PCM was substituted, replace the original ECM/PCM (see page 11-284). ■

Throttle Body Test

NOTE:
- Do not adjust the throttle stop screw. It is preset at the factory.
- If the malfunction indicator lamp (MIL) has been reported on, check for diagnostic trouble codes (DTCs) (see page 11-4).

1. With the engine off, check the throttle cable operation. The cable should move without binding or sticking.

   - If the cable operated OK, go to step 2.
   - If the cable binds or sticks, check it and its routing. If the cable is faulty, reroute it or replace it then adjust it, K20A2/K20Z1 engines (see page 11-408), K20A3 engine (see page 11-408). When the cable is properly adjusted, go to step 2.

2. Operate the throttle lever by hand to see if the throttle valve and/or shaft are too loose or too tight.

   - If there is excessive play in the throttle valve shaft, or any binding in the throttle valve at the fully closed position, replace the throttle body.
   - If the throttle valve and shaft are OK, go to step 3.

3. Connect the HDS or a scan tool to the data link connector (DLC).

4. Turn the ignition switch ON (II).

5. Check the throttle position with the HDS or a scan tool. There should be about 10 % or 0.5 V when the throttle is fully closed and about 90 % or 4.5 V when the throttle is fully opened.

   - If the throttle position is correct, check the throttle body for carbon deposits, and clean it if needed.
   - If the throttle position is not correct, replace the throttle body.

Throttle Body Cleaning

1. Check for damage to the air cleaner.

2. Remove the throttle body, K20A2/K20Z1 engines (see page 11-410), K20A3 engine (see page 11-411).

3. Clean off any carbon from the throttle valve and inside of the throttle body with throttle plate and induction cleaner.

4. Install the throttle body, K20A2/K20Z1 engines (see page 11-410), K20A3 engine (see page 11-411).

5. Do the ECM/PCM idle learn procedure, 2002-2004 models (see page 11-349), 2005-2006 models (see page 11-349).

Throttle Position Sensor Signal Inspection

NOTE:
- This procedure is to inspect the abnormalities of the throttle position sensor full closed position.
- Other failures than full closed position will store a DTC, therefore the procedure to inspect them are not included in this procedure.
- Check for Temporary DTCs or DTCs with the HDS before this procedure. If there are any DTCs indicated, troubleshoot them first, then do this procedure.
- Press the accelerator pedal several times, and check the operation. If it does not operate properly check the accelerator pedal, the throttle cable, and the throttle linkage individually. If you fined a problem in one of them, replace the parts that caused the problem.

1. Connect the HDS to the data link connector (DLC) (A) located under the driver's side of the dashboard.

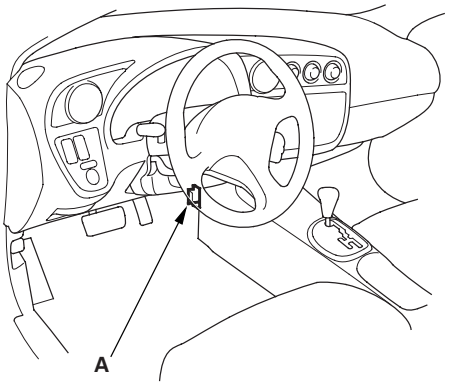

2. Turn the ignition switch ON (II).

3. Make sure the accelerator pedal is not pressed and check the REL TP SENSOR in the DATA LIST with the HDS.

   - If it is below 10 %, the throttle position sensor is OK.
   - If it is above 10 %, adjust the throttle cable, K20A2/K20Z1 engines (see page 11-408), K20A3 engine (see page 11-408), then go to step 4.

4. Make sure the accelerator pedal is not pressed and check the REL TP SENSOR in the DATA LIST with the HDS.

   - If it is below 10 %, the throttle position sensor is OK.
   - If it is above 10 %, update the ECM/PCM if it does not have the latest software, or substitute a known-good ECM/PCM (see page 11-6), then go to step 5.

5. Make sure the accelerator pedal is not pressed and check the REL TP SENSOR in the DATA LIST with the HDS.

   - If it is below 10 %, the throttle position sensor is OK.
   - If it is above 10 %, replace the throttle body assembly, K20A2/K20Z1 engines (see page 11-410), K20A3 engine (see page 11-411), then go to step 1.

Intake Air Bypass Control Thermal Valve Test

Special Tools Required
Vacuum pump/gauge, 0—30 in.Hg, Snap-on YA4000A or equivalent, commercially available

1. Start the engine, and let it idle.

   NOTE: Engine coolant temperature must be below 149 °F (65 °C).

2. Remove the vacuum hose (A) from the intake air duct, and connect the vacuum pump/gauge, 0—30 in.Hg, to the hose.

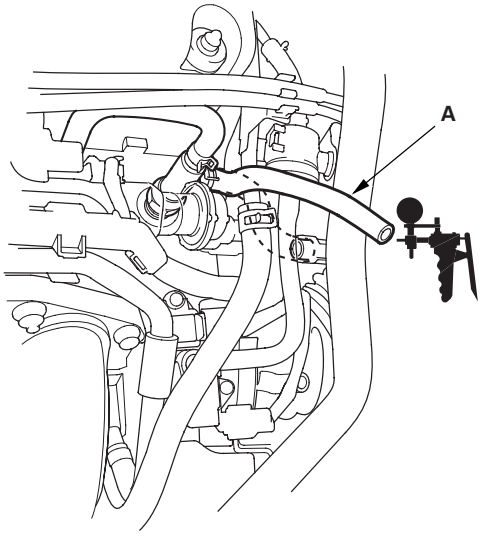

3. Raise and lower the engine speed, and make sure the vacuum gauge reading changes as the engine speed changes.

   If the vacuum reading does not change, check for these problems:

   - Misrouted, leaking, broken, or clogged intake air bypass control system vacuum lines.
   - A cracked or damage intake air bypass control thermal valve.

4. Hold the engine speed at 3,000 rpm without load (in Park or neutral) until the radiator fan comes on, then let it idle.

5. Raise and lower the engine speed, and make sure the vacuum gauge reading does not change as the rpm changes.

   If the vacuum reading changes, check for these problems:

   - Misrouted, leaking, broken, or clogged intake air bypass control system vacuum lines.
   - A cracked or damaged intake air bypass control thermal valve.

Intake Air Bypass Control Thermal Valve Replacement

1. Remove the intake manifold cover, K20A3 engine (see step 1 on page 9-3), K20A2/K20Z1 engines (see step 2 on page 9-9).

2. Disconnect the hoses (A).

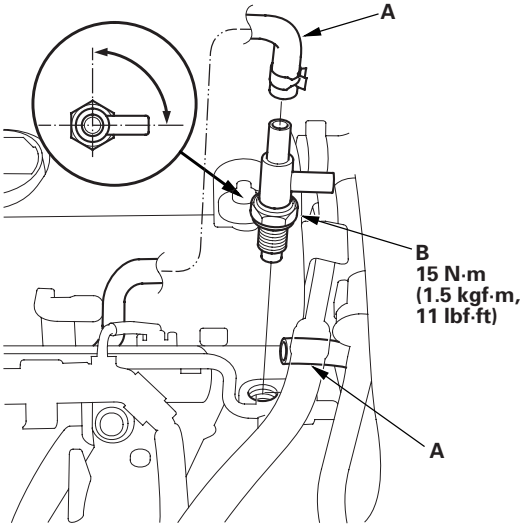

3. Remove the intake air bypass control thermal valve (B).

4. Install the valve in the reverse order of removal.

   NOTE: Position the valve angle as shown.

Air Cleaner Removal/Installation

1. Remove the clamp (A) and the nuts (B).

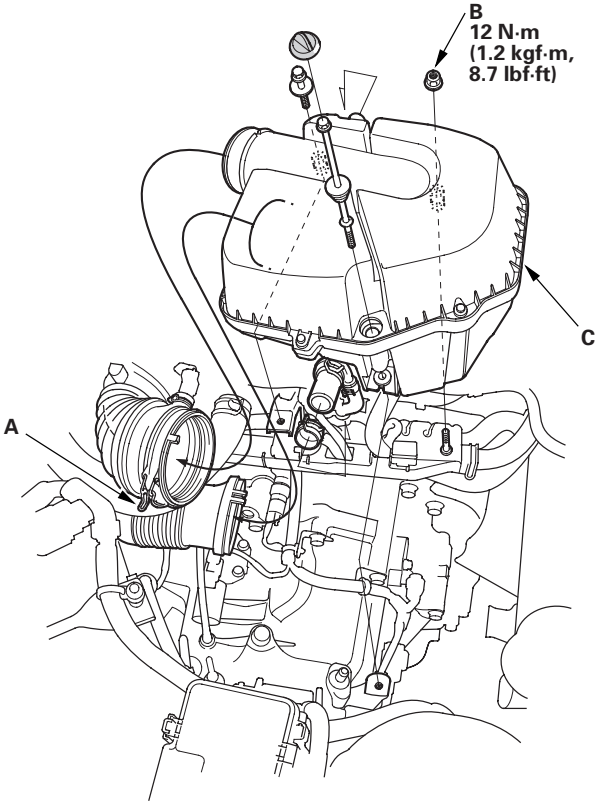

2. Remove the air cleaner (C).

3. Install the parts in the reverse order of removal.

Air Cleaner Element Inspection/ Replacement

1. Remove the clamp (A) and the screws (B), then open the air cleaner housing cover (C).

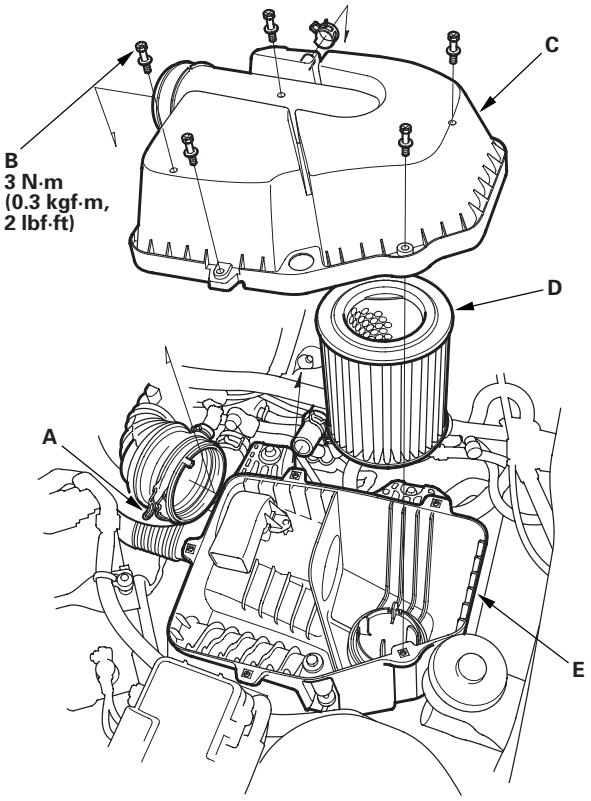

2. Remove the air cleaner (D) from the air cleaner housing (E).

3. Check the air cleaner element for damage or clogging. If it is damaged or clogged, replace it.

   NOTE: Do not use compressed air to clean the air cleaner element.

4. Install the parts in the reverse order of removal.

Throttle Cable Adjustment

K20A2/K20Z1 engines

1. Check cable free play at the throttle linkage. Cable deflection (A) should be 10—12 mm (3/8—1/2 in.).

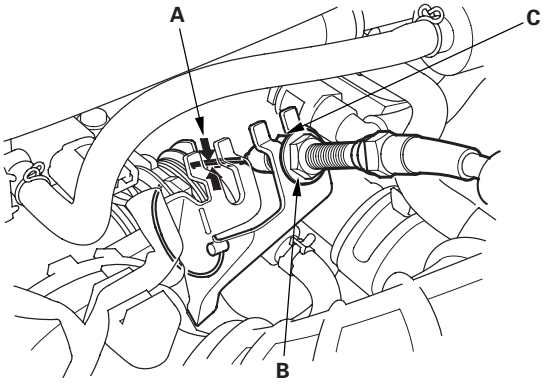

2. If deflection (A) is not within spec (10—12 mm, 3/8—1/2 in.) loosen the locknut (B), turn the adjusting nut (C) until the deflection is as specified, then retighten the locknut.

3. With the cable properly adjusted, check the throttle valve to be sure it opens fully when you push the accelerator pedal to the floor. Also check the throttle valve to be sure it returns to the idle position whenever you release the accelerator pedal.

K20A3 engine

1. Remove the inspection hole plug (A).

2. Check cable free play at the throttle linkage. Cable deflection (B) should be 10—12 mm (3/8—1/2 in.).

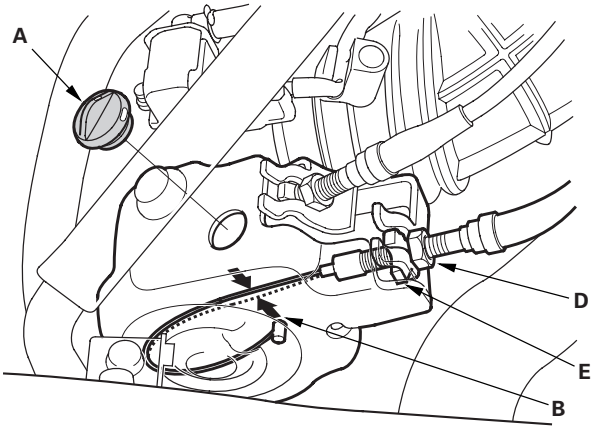

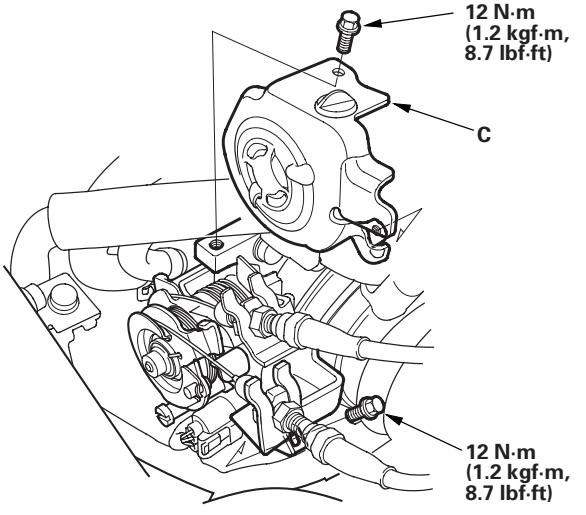

3. If deflection (B) is not within spec (10—12 mm, 3/8—1/2 in.), remove the throttle linkage cover (C), loosen the locknut (D), turn the adjusting nut (E) until the deflection is as specified, then retighten the locknut.

4. With the cable properly adjusted, check the throttle valve to be sure it opens fully when you push the accelerator pedal to the floor. Also check the throttle valve to be sure it returns to the idle position whenever you release the accelerator pedal.

Throttle Cable Removal/Installation

1. Remove the throttle linkage cover (A) (K20A3 engine only).

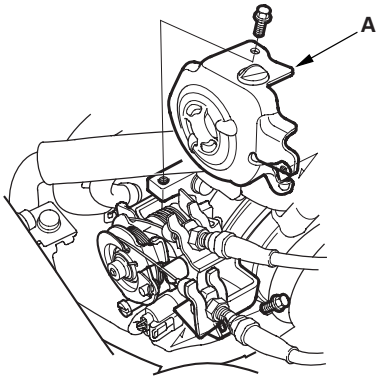

2. Fully open the throttle valve, then remove the throttle cable (A) from the throttle link (B).

K20A2/K20Z1 engines

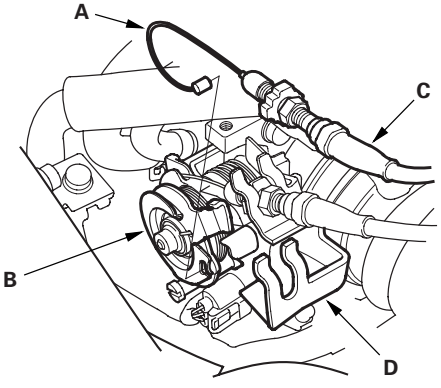

K20A3 engine

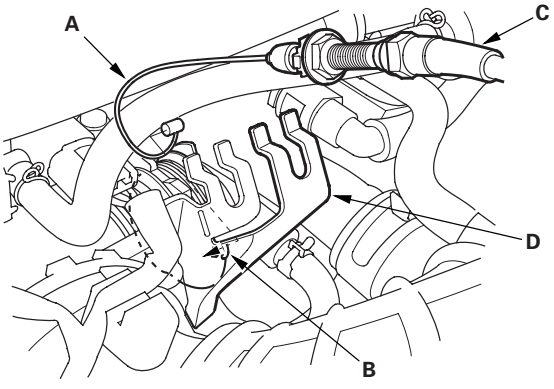

3. Remove the cable housing (C) from the cable bracket (D).

4. Remove the throttle cable (A) from the accelerator pedal (B).

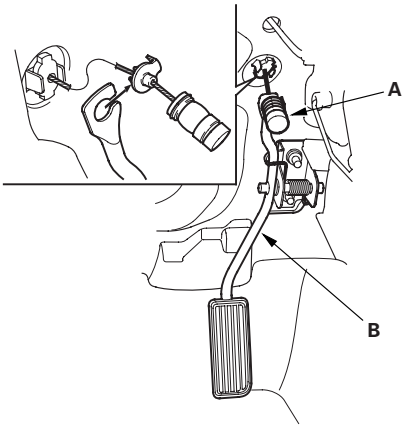

5. Install in the reverse order of removal.

6. After installing, start the engine. Hold the engine speed at 3,000 rpm without load (in Park or neutral) until the radiator fan comes on, then let it idle.

7. Hold the cable, removing all slack from it.

8. Set the locknut on the cable bracket (A). Turn the adjusting nut (B) so that its free play is 0 mm.

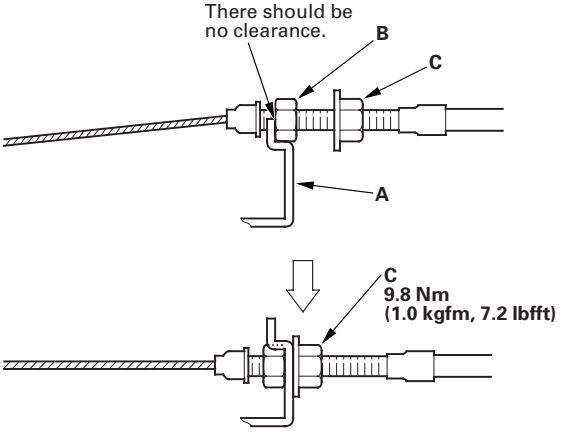

9. Remove the cable from the throttle bracket (A). Reset the adjusting nut (B), and tighten the locknut (C).

10. With the cable properly adjusted, check the throttle valve to be sure it opens fully when you push the accelerator pedal to the floor. Also check the throttle valve to be sure it returns to the idle position whenever you release the accelerator pedal.

Throttle Body Removal/Installation

NOTE:
- Do not adjust the throttle stop screw.
- After reassembly, adjust the cruise control cable (see page 4-71) and the throttle cable (see page 11-409).
- The throttle position (TP) sensor is not removable.

K20A2/K20Z1 engines

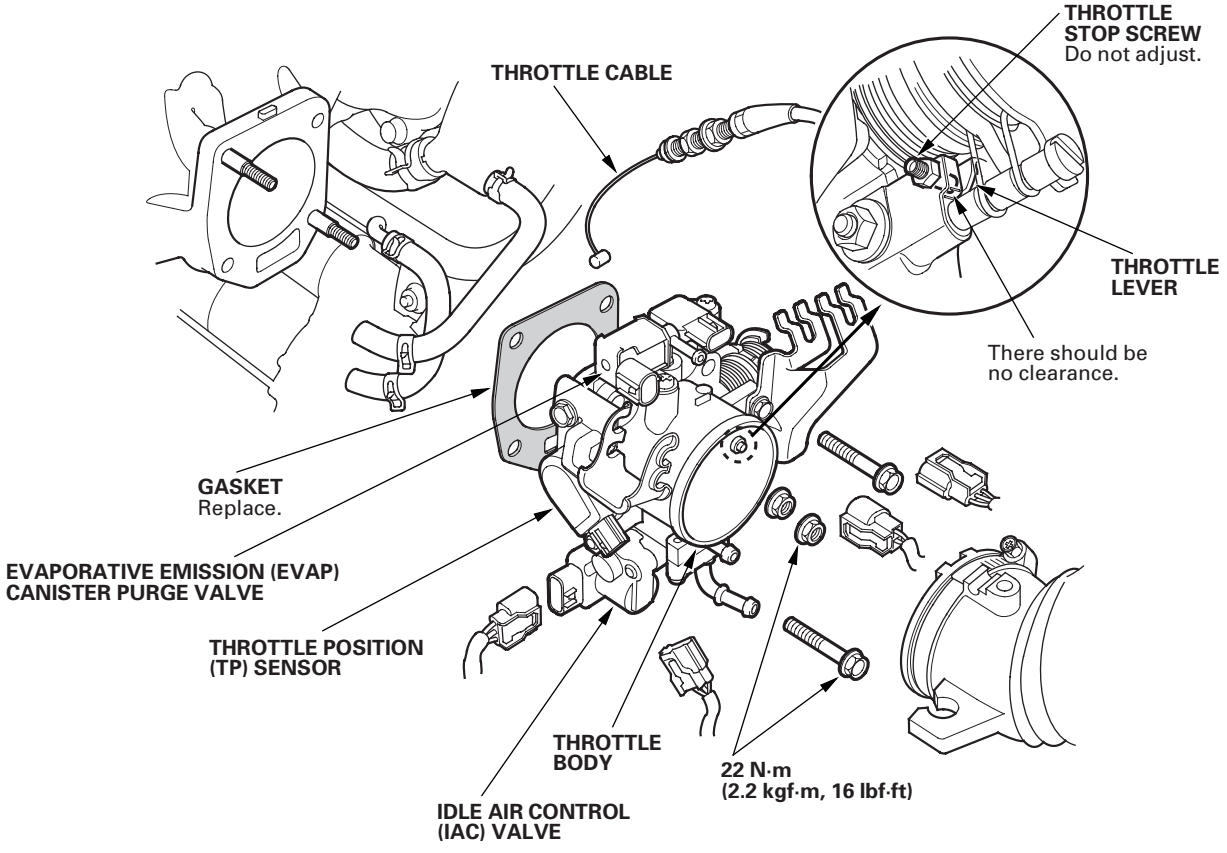

NOTE:
- Do not adjust the throttle stop screw.
- After reassembly, adjust the cruise control cable (see page 4-71) and the throttle cable (see page 11-409).
- The throttle position (TP) sensor is not removable.

K20A3 engine

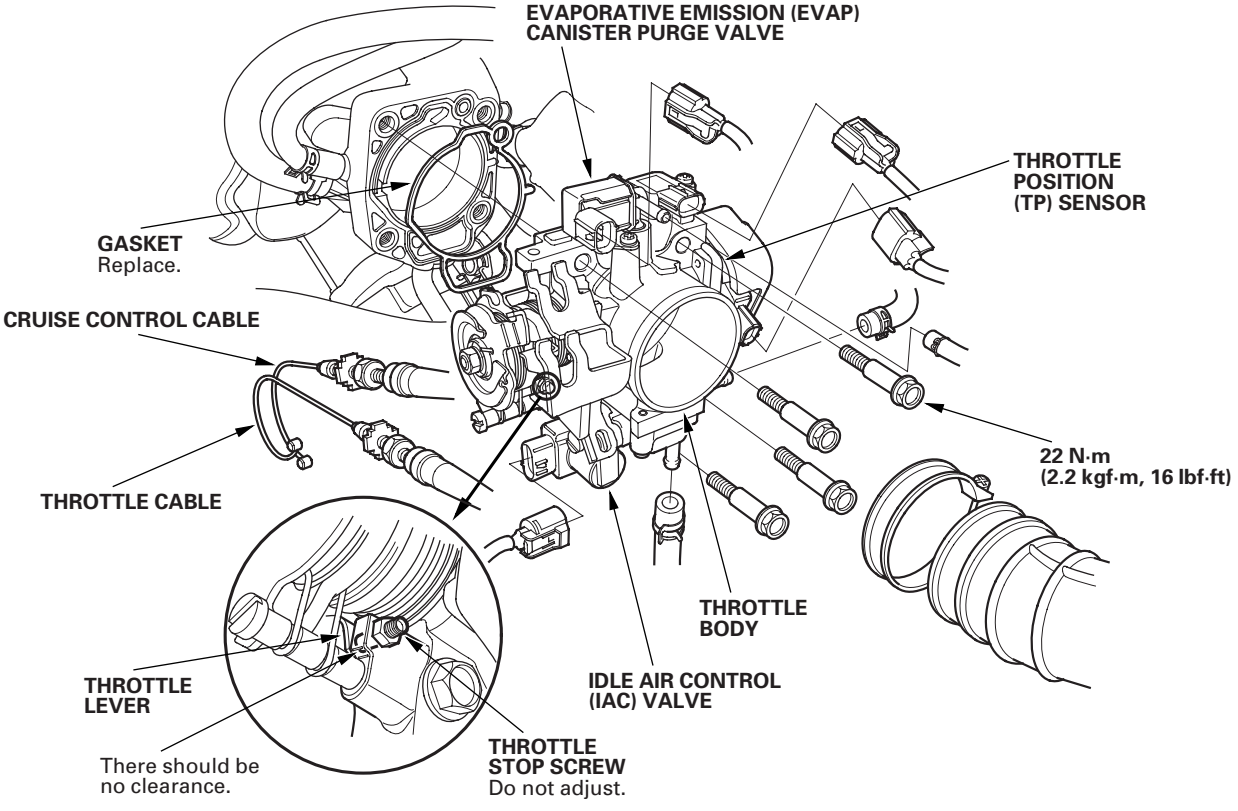

Throttle Body Disassembly/Reassembly

K20A2/K20Z1 engines

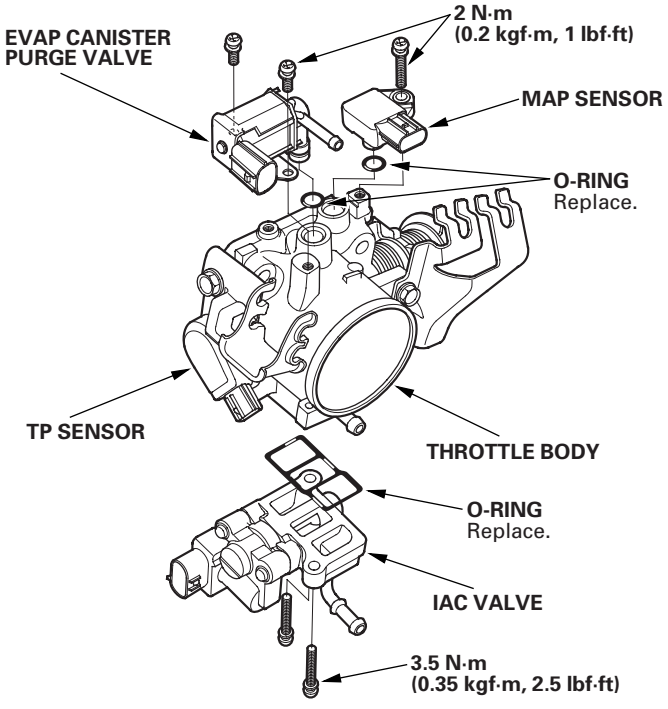

K20A3 engine

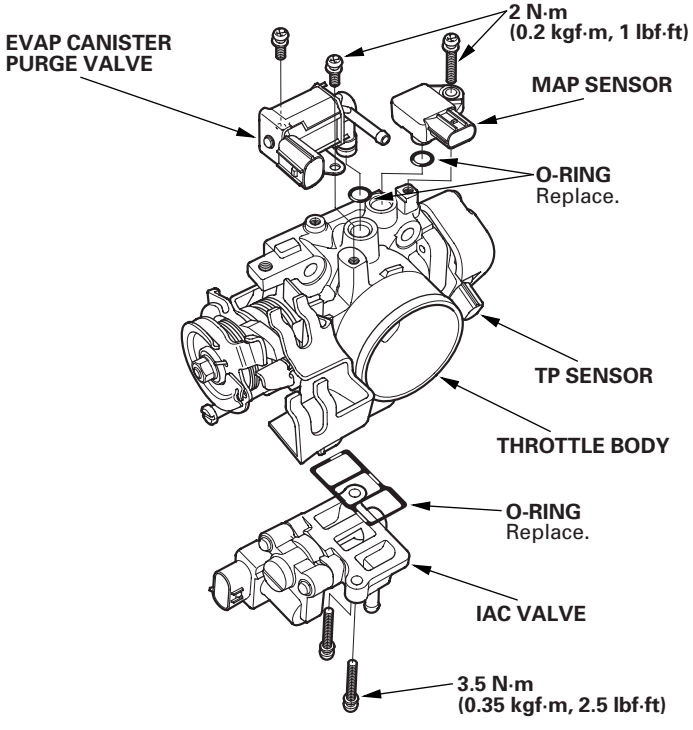

IMT (IMRC) Valve Position Sensor Replacement

1. Remove the two screws (A) and the IMT (IMRC) position sensor (B).

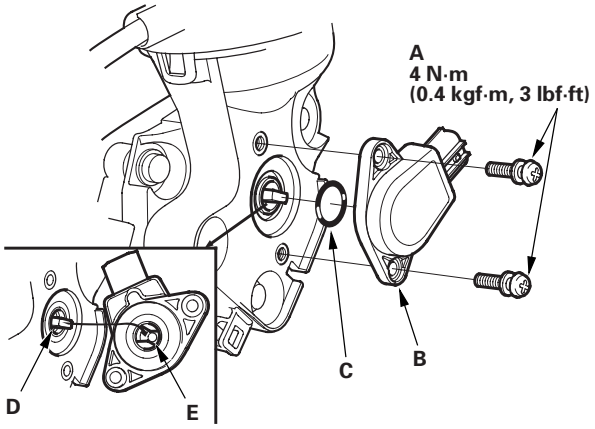

2. Install the sensor with a new O-ring (C), and make sure the projection (D) inside the IMT (IMRC) valve matches up with the groove (E) in the sensor.

IMT (IMRC) Valve Replacement

1. Remove the intake manifold (see page 9-2).

2. Disconnect the vacuum hose (A), then remove the bolts (B), and remove the IMT (IMRC) valve assembly (C).

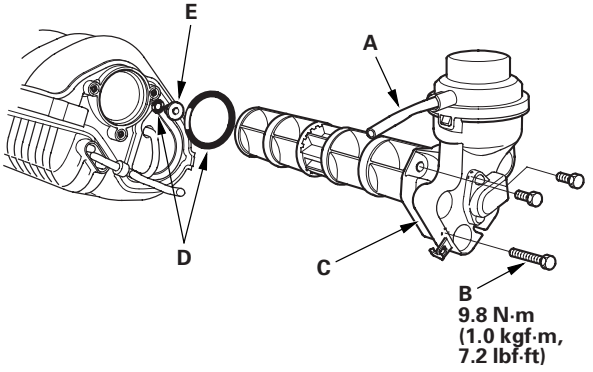

3. Install the parts in the reverse order of removal with a new O-rings (D).

   NOTE: Make sure the bearing (E) is secured into place.

DTC Troubleshooting

DTC P0420: Catalyst System Efficiency Below Threshold (2002-2004 models)

NOTE: If some of the DTCs listed below are stored at the same time as DTC P0420, troubleshoot those DTCs first, then recheck for DTC P0420.

P0137, P0138: Secondary HO2S (Sensor 2)
P0141: Secondary HO2S (Sensor 2) heater

1. Reset the ECM/PCM (see page 11-4).

2. Start the engine. Hold the engine speed at 3,000 rpm without load (in Park or neutral) until the radiator fan comes on.

3. Test-drive at 50—55 mph (80—88 km/h) for about 2 minutes. Then decelerate for at least 4 seconds with the throttle completely closed. Then accelerate to 55 mph (88 km/h), and try to hold the speed until the HDS indicates FAIL or PASS as the TWC test result.

   Is the test result FAIL?

   YES—Check the three way catalytic converter (TWC). If necessary, replace the TWC. ■

   NO—Intermittent failure, system is OK at this time. ■

DTC P0420: Catalyst System Efficiency Below Threshold (2005-2006 models)

NOTE:
- If some of the DTCs listed below are stored at the same time as DTC P0420, troubleshoot those DTCs first, then recheck for DTC P0420.
  P0137, P0138: Secondary HO2S (Sensor 2)
  P0141: Secondary HO2S (Sensor 2) heater
- Poor quality fuel may cause this DTC.

1. Turn the ignition switch ON (II).

2. Clear the DTC with the HDS.

3. Start the engine. Hold the engine speed at 3,000 rpm without load (in Park or neutral) until the radiator fan comes on, then let it idle.

4. Test-drive under these conditions:

   - Engine coolant temperature above 158 °F (70 °C)
   - A/T in D position (M/T in 5th gear)
   - Vehicle speed between 45 mph (72 km/h) and 75 mph (120 km/h) for 5 minutes or more
   - Maintain a vehicle speed 25 mph (40 km/h) or more for 5 minutes with cruise control set

5. Monitor the OBD STATUS for DTC P0420 in the DTCs MENU with the HDS.

   Does the screen indicate EXECUTING?

   YES—Go to step 6.

   NO—Go to step 4 and recheck.

6. Continue test driving until a result comes on.

7. Monitor the OBD STATUS for DTC P0420 in the DTCs MENU with the HDS.

   Does the screen indicate FAILED?

   YES—Go to step 8.

   NO—If the screen indicates PASSED, intermittent failure, system is OK at this time. If the screen indicates EXECUTING, keep driving until a result comes on. If the screen indicates OUT OF CONDITION, go to step 4 and recheck.

8. Turn the ignition switch OFF.

9. Replace the three way catalytic converter (TWC) (see page 9-15).

10. Turn the ignition switch ON (II).

11. Reset the ECM/PCM with the HDS.

12. Do the ECM/PCM idle learn procedure (see page 11-349).

13. Start the engine. Hold the engine speed at 3,000 rpm without load (in Park or neutral) until the radiator fan comes on, then let it idle.

14. Test-drive for about 10 minutes, varying the vehicle speed.

15. Check the CAT MONITOR CONDITION in the DATA LIST with the HDS.

    Is the temperature OK?

    YES—Go to step 16.

    NO—Go to step 13 and recheck.

16. Test-drive under these conditions:

    - Engine coolant temperature above 158 °F (70 °C)
    - A/T in D position (M/T in 5th gear)
    - Vehicle speed between 45 mph (72 km/h) and 75 mph (120 km/h) for 5 minutes or more
    - Maintain a vehicle speed 25 mph (40 km/h) or more for 5 minutes with cruise control set

(cont'd)

DTC Troubleshooting (cont'd)

17. Monitor the OBD STATUS for DTC P0420 in the DTCs MENU with the HDS.

    Does the screen indicate EXECUTING?

    YES—Go to step 18.

    NO—Go to step 16 and recheck.

18. Continue test driving until a result comes on.

19. Check for Temporary DTCs or DTCs with the HDS.

    Are any Temporary DTCs or DTCs indicated?

    YES—Go to the indicated DTC's troubleshooting. ■

    NO—Go to step 20.

20. Monitor the OBD STATUS for DTC P0420 in the DTCs MENU with the HDS.

    Does the screen indicate PASSED?

    YES—Troubleshooting is complete. ■

    NO—If the screen indicates FAILED, check the fuel quality. If the screen indicates EXECUTING, keep driving until a result comes on. If the screen indicates OUT OF CONDITION, go to step 13 and recheck.

DTC Troubleshooting

DTC P2279: Intake Air System Leak Detected (2004 model)

1. Reset the ECM/PCM (see page 11-4).

2. Start the engine. Hold the engine speed at 3,000 rpm without load (in Park or neutral) until the radiator fan comes on.

3. Let the engine idle for at least 40 seconds with the throttle fully closed.

4. Check for Temporary DTCs or DTCs with a scan tool or the HDS.

   Is DTC P2279 indicated ?

   YES—Check for vacuum leaks at these parts: ■

   - PCV valve
   - PCV hose
   - EVAP canister purge valve
   - Throttle body
   - Intake manifold
   - Brake booster hose
   - Intake air bypass control thermal valve

   NO—Intermittent failure, system is OK at this time. ■

DTC Troubleshooting (cont'd)

DTC P2279: Intake Air System Leak Detected (2005-2006 models)

NOTE: If DTC P0443 is stored at the same time as DTC P2279, troubleshoot DTC P0443 first, then recheck for DTC P2279.

1. Check for vacuum leaks at these parts:

   - PCV valve
   - PCV hose
   - EVAP canister purge valve
   - Throttle body
   - Intake manifold
   - Brake booster hose
   - Intake air bypass control thermal valve

   Are the parts OK?

   YES—Go to step 2.

   NO—Repair or replace the leaking part(s), then go to step 4.

2. Start the engine. Hold the engine speed at 3,000 rpm without load (in Park or neutral) until the radiator fan comes on, then let it idle for 1 minute.

3. Monitor the OBD STATUS for DTC P2279 in the DTCs MENU with the HDS.

   Does the screen indicate FAILED?

   YES—Check the camshaft timing (see page 6-17), then go to step 4.

   NO—If the screen indicates PASSED, intermittent failure, system is OK at this time. If the screen indicates NOT COMPLETED, go to step 2 and recheck.

4. Reset the ECM/PCM with the HDS.

5. Do the ECM/PCM idle learn procedure (see page 11-349).

6. Check for Temporary DTCs or DTCs with the HDS.

   Are any Temporary DTCs or DTCs indicated?

   YES—If DTC P2279 is indicated, check for vacuum leaks at the PCV valve, the PCV hose, the purge (PCS) line, the throttle body, or the brake booster hose, then go to step 4. If any other Temporary DTCs or DTCs are indicated, go to the indicated DTC's troubleshooting.

   NO—Go to step 7.

7. Monitor the OBD STATUS for DTC P2279 in the DTCs MENU with the HDS.

   Does the screen indicate PASSED?

   YES—Troubleshooting is complete. ■

   NO—If the screen indicates FAILED, go to step 1 and recheck. If the screen indicates NOT COMPLETED, go to step 6 and recheck.

PCV Valve Inspection

1. Check the PCV valve (A), hoses (B) and connections for leaks or restrictions.

K20A2/K20Z1 engines

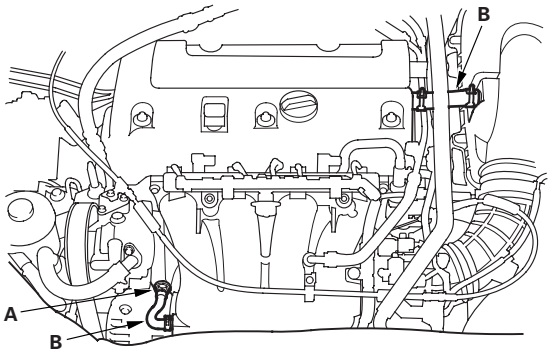

K20A3 engine

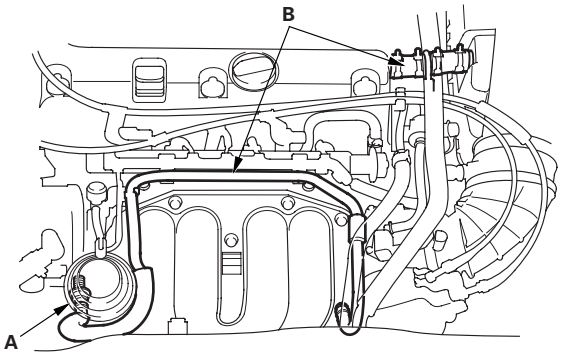

2. At idle, make sure there is a clicking sound from the PCV valve when the hose between the PCV valve and intake manifold is lightly pinched (A) with your fingers or pliers.
   If there is no clicking sound, check the PCV valve grommet for cracks or damage. If the grommet is OK, replace the PCV valve and recheck.

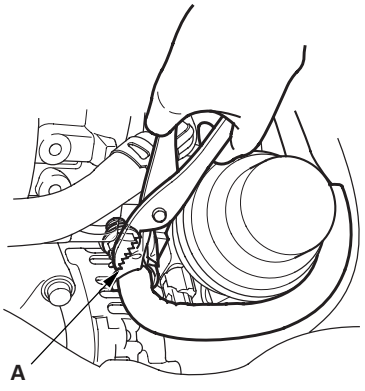

PCV Valve Replacement

1. Unscrew the PCV valve (A) and, remove it.

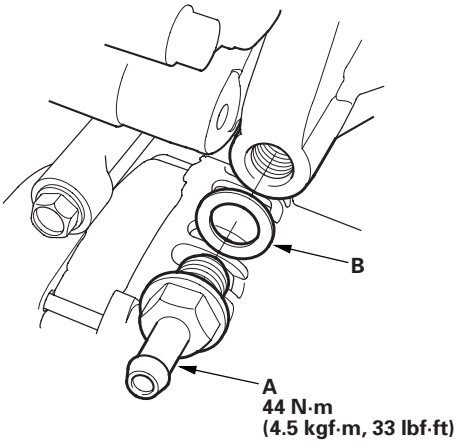

2. Install the valve in the reverse order of removal with a new washer (B).

Component Location Index

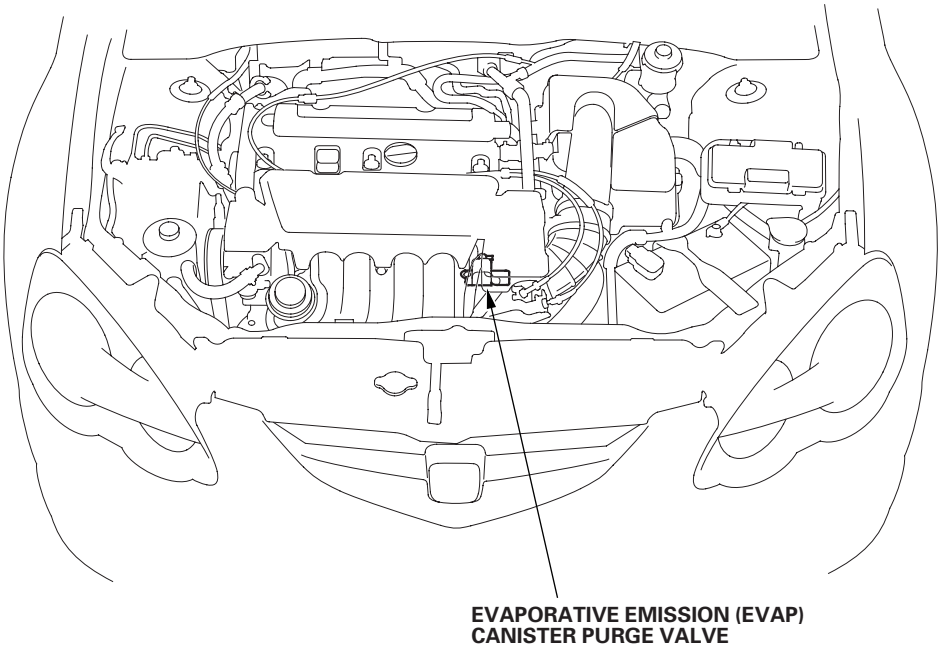

*: This illustration shows the 2002-2004 K20A3 engine model; the other models are similar.

2002-2004 models

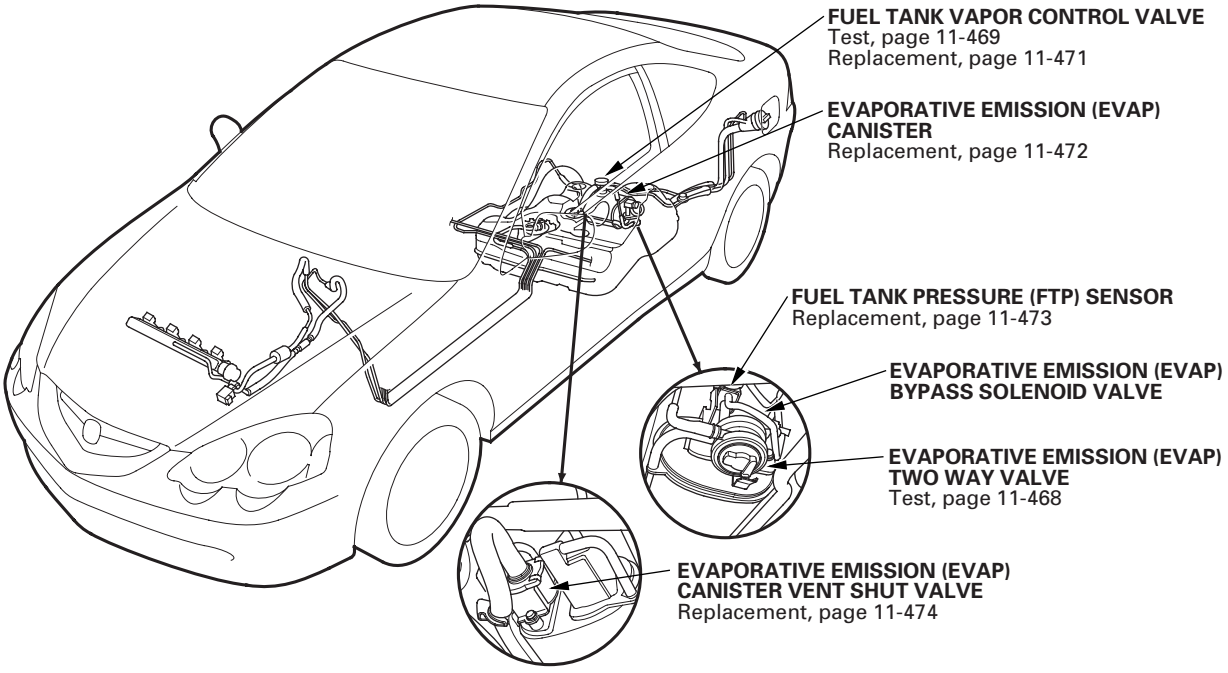

*: This illustration shows the K20A3 engine; the K20A2 engine is similar.

2005-2006 models

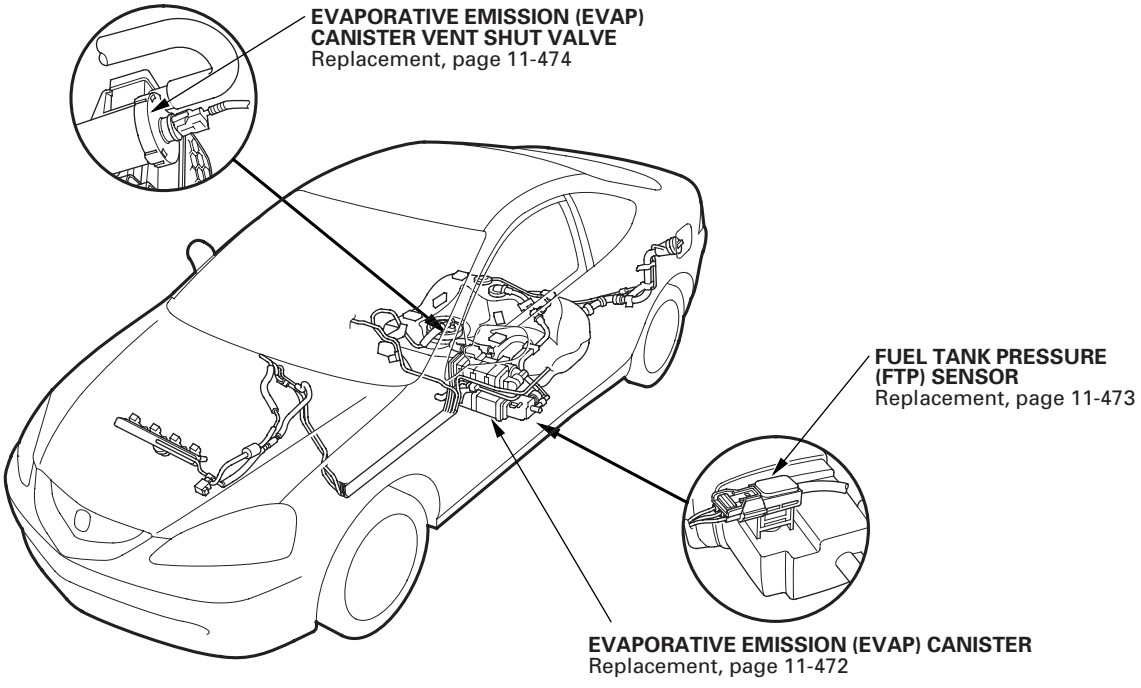

*: This illustration shows the K20A3 engine; the K20Z1 engine is similar.

DTC Troubleshooting

DTC P0442: EVAP System Small Leak Detected
(2005-2006 models)

DTC P0456: EVAP System Very Small Leak Detected
(2005-2006 models)

NOTICE
The fuel system is designed to allow specified maximum vacuum and pressure conditions. Do not deviate from the vacuum and pressure tests as indicated in these procedures. Excessive pressure/vacuum would damage the EVAP components or cause eventual fuel tank failure.

Special Tools Required
- Vacuum/pressure gauge, 0—4 in.Hg, 07JAZ-001000B
- Vacuum pump/gauge, 0—30 in.Hg, Snap-on YA4000A or equivalent, commercially available

NOTE: Fresh fuel has a higher volatility that will create greater pressure/vacuum. The optimum condition for testing is less than a full tank of fresh fuel. If possible, to assist in leak detection, add 1 gallon of fresh fuel to the tank (as long as it will not fill the tank) just before starting these procedures.

1. Check the fuel fill cap (the cap must say ''Tighten click''). It should turn 1/4 turn after it's tight, then it clicks.

   Is the correct fuel fill cap installed and properly tightened?

   YES—Go to step 2.

   NO—Replace or tighten the cap, then go to step 22.

2. Check the fuel fill cap seal (A) and the fuel fill pipe mating surface (B). Verify that the fuel fill cap tether cord (C) is not caught under the cap.

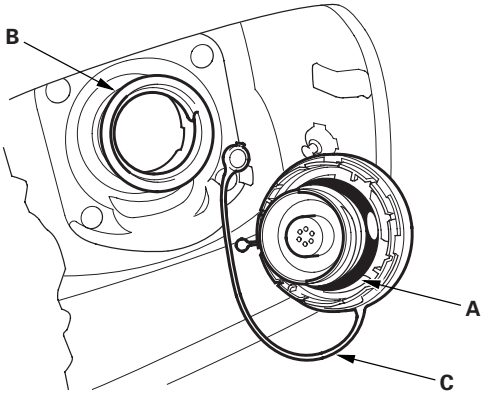

   Is the fuel fill cap seal missing or damaged, is the fuel fill pipe damaged, or is the tether cord caught under the cap?

   YES—Replace the fuel fill cap or the fuel fill pipe, then go to step 22.

   NO—Go to step 3.

3. Turn the ignition switch ON (II).

4. Clear the DTC with the HDS.

5. Do the EVAP FUNCTION TEST in the INSPECTION MENU with the HDS.

   Is the result OK?

   YES—Intermittent failure, system is OK at this time. Check for poor connections or loose terminals at the FTP sensor, the EVAP canister purge valve, or the EVAP canister vent shut valve and the ECM/PCM. ■

   NO—Go to step 6.

6. Turn the ignition switch OFF.

7. Turn the ignition switch ON (II).

8. Check for a poor connection or damage at the fuel tank vapor recirculation tube (see page 11-69).

   Is the tube OK?

   YES—Go to step 9.

   NO—
   - Replace the fuel tank vapor recirculation tube, then go to step 22.
   - If necessary, replace the fuel tank (see page 11-378), then go to step 22.

9. Disconnect the fuel tank vapor recirculation tube (A) from the EVAP canister (B), and plug the EVAP canister port (C).

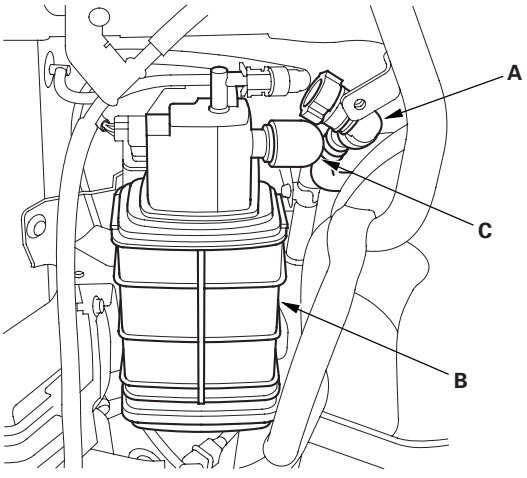

10. Disconnect the vacuum hose (purge line) (A) from the EVAP canister purge valve (B) in the engine compartment, and connect the T-fitting (C) from the vacuum gauge and the vacuum pump/gauge, 0—30 in.Hg, to the hose as shown.

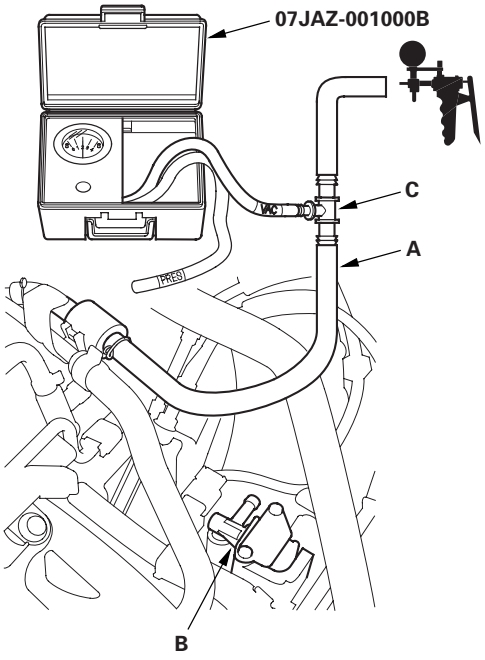

11. Do the EVAP CVS ON in the INSPECTION MENU with the HDS.

12. Apply vacuum to the hose until the FTP reads 1.90 V (—0.5 in.Hg, —14.6 mmHg).

13. Monitor the FTP SENSOR in the DATA LIST for 1 minute with the HDS.

    Does the voltage increase more than 0.2 V (0.1 in.Hg, 0.5 mmHg)?

    YES—Go to step 14.

    NO—Go to step 19.

14. Do the EVAP CVS OFF in the INSPECTION MENU with the HDS.

(cont'd)

DTC Troubleshooting (cont'd)

15. Disconnect the fresh air hose (A) from the EVAP canister vent shut valve (B), and plug the EVAP canister vent shut valve ports (C).

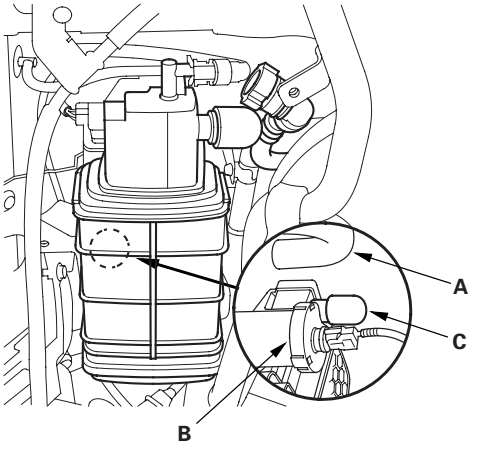

16. Apply vacuum to the hose (disconnected in step 10) until the FTP reads 1.90 V (—0.5 in.Hg, —14.6 mmHg).

17. Monitor the FTP SENSOR in the DATA LIST for 1 minute with the HDS.

    Does the voltage increase more than 0.2 V (0.1 in.Hg, 0.5 mmHg)?

    YES—Go to step 18.

    NO—Replace the EVAP canister vent shut valve, then go to step 21.

18. Check for a loose or damaged PCS line between the EVAP canister and the EVAP canister purge valve.

    Is the line OK?

    YES—Replace these parts, then go to step 21.

    - FTP sensor O-ring
    - EVAP canister vent shut valve case and O-ring
    - EVAP canister

    NO—Reconnect or repair the PCS hose, then go to step 21.

19. Do the EVAP CVS OFF in the INSPECTION MENU with the HDS.

20. Check these parts for looseness or damage.

    - Fuel fill pipe
    - Fuel vapor return pipe

    Are the parts OK?

    YES—Check the fuel pump base gasket (see page 11-376), and check the fuel tank, then go to step 21.

    NO—Repair or replace any damaged parts, then go to step 21.

21. Reconnect all hoses and connectors.

22. Turn the ignition switch ON (II).

23. Reset the ECM/PCM with the HDS.

24. Do the ECM/PCM idle learn procedure (see page 11-349).

25. Do the EVAP FUNCTION TEST in the INSPECTION MENU with the HDS.

    Is the result OK?

    YES—Troubleshooting is complete. ■

    NO—Check for poor connections or loose terminals at the FTP sensor, the EVAP canister purge valve, or the EVAP canister vent shut valve and the ECM/PCM, then go to step 1.

DTC P0443: EVAP Canister Purge Valve Circuit Malfunction (2005-2006 models)

Special Tools Required
Vacuum pump/gauge, 0—30 in.Hg, Snap-on YA4000A or equivalent, commercially available

1. Turn the ignition switch ON (II).

2. Clear the DTC with the HDS.

3. Start the engine. Hold the engine speed at 3,000 rpm without load (in Park or neutral) until the radiator fan comes on, then let it idle.

4. Check for Temporary DTCs or DTCs with the HDS.

   Is DTC P0443 indicated?

   YES—Go to step 5.

   NO—Intermittent failure, system is OK at this time. Check for poor connections or loose terminals at the EVAP canister purge valve and the ECM/PCM. ■

5. Turn the ignition switch OFF, and allow the engine to cool below 131 ℉ (55 ℃).

6. Disconnect the vacuum hose (A) from the EVAP canister purge valve (B) in the engine compartment, and connect the vacuum pump/gauge, 0—30 in.Hg, to the hose.

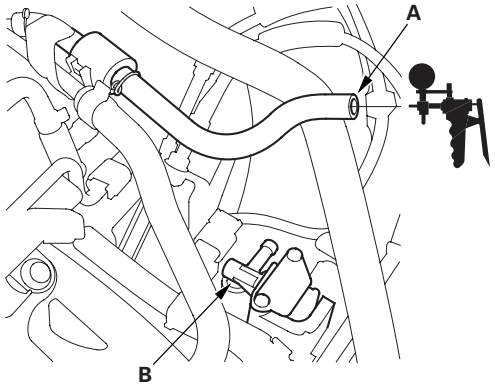

7. Start the engine and let it idle.

   Is there vacuum?

   YES—Go to step 8.

   NO—Go to step 14.

8. Turn the ignition switch OFF.

9. Disconnect the EVAP canister purge valve 2P connector.

10. Check for continuity between EVAP canister purge valve 2P connector No. 2 and body ground.

EVAP CANISTER PURGE VALVE 2P CONNECTOR

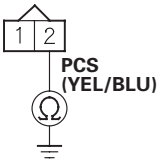

Wire side of female terminals

   Is there continuity?

   YES—Go to step 11.

   NO—Go to step 24.

11. Jump the SCS line with the HDS.

12. Disconnect ECM/PCM connector B (24P).

13. Check for continuity between EVAP canister purge valve 2P connector terminal No. 2 and body ground.

EVAP CANISTER PURGE VALVE 2P CONNECTOR

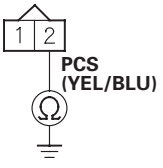

Wire side of female terminals

   Is there continuity?

   YES—Repair short in the wire between the EVAP canister purge valve and the ECM/PCM (B21), then go to step 25.

   NO—Go to step 31.

(cont'd)

DTC Troubleshooting (cont'd)

14. Turn the ignition switch OFF.

15. Disconnect the EVAP canister purge valve 2P connector.

16. Turn the ignition switch ON (II).

17. Measure voltage between EVAP canister purge valve 2P connector terminal No. 1 and body ground.

EVAP CANISTER PURGE VALVE 2P CONNECTOR

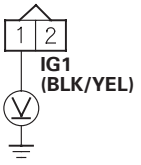

Wire side of female terminals

Is there battery voltage?

YES—Go to step 18.

NO—Repair open in the wire between the EVAP canister purge valve and the No. 4 ACG (10 A) fuse in the under-dash fuse/relay box, then go to step 25.

18. Turn the ignition switch OFF.

19. Jump the SCS line with the HDS.

20. Disconnect ECM/PCM connector B (24P).

21. Connect EVAP canister purge valve 2P connector terminal No. 2 to body ground with a jumper wire.

EVAP CANISTER PURGE VALVE 2P CONNECTOR

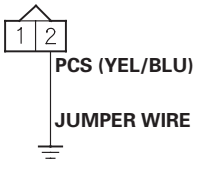

Wire side of female terminals

22. Check for continuity between ECM/PCM connector terminal B21 and body ground.

ECM/PCM CONNECTOR B (24P)

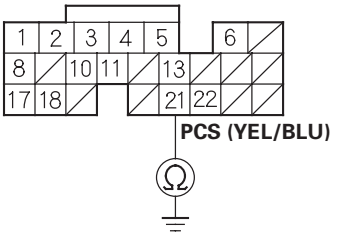

Wire side of female terminals

Is there continuity?

YES—Go to step 23.

NO—Repair open in the wire between the EVAP canister purge valve and the ECM/PCM (B21), then go to step 25.

23. Measure resistance between EVAP canister purge valve 2P connector terminals No. 1 and No. 2.

EVAP CANISTER PURGE VALVE 2P CONNECTOR

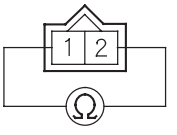

Terminal side of male terminals

Is there about 33 Ω at room temperature?

YES—Go to step 31.

NO—Go to step 24.

24. Replace the EVAP canister purge valve (see page 11-412).

25. Reconnect all connectors.

26. Turn the ignition switch ON (II).

27. Reset the ECM/PCM with the HDS.

28. Do the ECM/PCM idle learn procedure (see page 11-349).

29. Check for Temporary DTCs or DTCs with the HDS.

    Are any Temporary DTCs or DTCs indicated?

    YES—If DTC P0443 is indicated, check for poor connections or loose terminals at the EVAP canister purge valve and the ECM/PCM, then go to step 1. If any other Temporary DTCs or DTCs are indicated, go to the indicated DTC's troubleshooting.

    NO—Troubleshooting is complete. ■

30. Monitor the OBD STATUS for DTC P0443 in the DTCs MENU with the HDS.

    Does the screen indicate PASSED?

    YES—Troubleshooting is complete. ■

    NO—If the screen indicates FAILED, check for poor connections or loose terminals at the EVAP canister purge valve and the ECM/PCM, then go to step 1. If the screen indicates EXECUTING, keep idling until a result comes on. If the screen indicates OUT OF CONDITION, go to step 28 and recheck.

31. Update the ECM/PCM if it does not have the latest software, or substitute a known-good ECM/PCM (see page 11-6).

32. Check for Temporary DTCs or DTCs with the HDS.

    Are any Temporary DTCs or DTCs indicated?

    YES—If DTC P0443 is indicated, check for poor connections or loose terminals at the EVAP canister purge valve and the ECM/PCM, then go to step 1. If any other Temporary DTCs or DTCs are indicated, go to the indicated DTC's troubleshooting.

    NO—If the ECM/PCM was updated, troubleshooting is complete. If the ECM/PCM was substituted, replace the original ECM/PCM (see page 11-284). ■

DTC Troubleshooting (cont'd)

DTC P0451: FTP Sensor Circuit Range/ Performance Problem (2002-2004 models)

Special Tools Required
Vacuum pump/gauge, 0—30 in.Hg, Snap-on YA4000A or equivalent, commercially available

1. Remove the fuel fill cap.
2. Turn the ignition switch ON (II).
3. Monitor the fuel tank pressure (FTP) sensor voltage with the HDS, or measure voltage between ECM/PCM connector terminals E4 and E14.

ECM/PCM CONNECTOR E (31P)

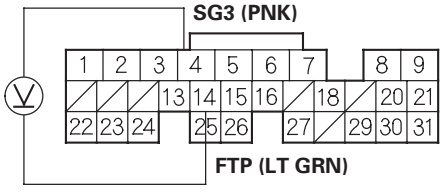

Wire side of female terminals

Is there about 2.5 V?

YES—Go to step 4.

NO—Replace the FTP sensor (see page 11-473). ■

4. Turn the ignition switch OFF.
5. Disconnect the hose between the EVAP two way valve and the FTP sensor at the EVAP two way valve end.
6. Connect the vacuum pump/gauge, 0—30 in.Hg, to the open end of that hose.

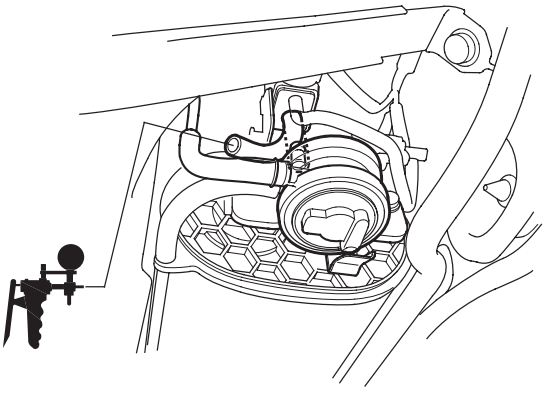

7. Turn the ignition switch ON (II).
8. Monitor the FTP sensor voltage with the HDS, or measure voltage between ECM/PCM connector terminals E4 and E14, and slowly squeeze the vacuum pump/gauge. Stop applying vacuum when the voltage drops to about 1.5 V or damage to the FTP sensor may occur.

ECM/PCM CONNECTOR E (31P)

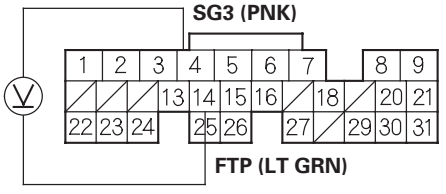

Wire side of female terminals

9. The voltage should drop smoothly from about 2.5 V down to about 1.5 V.

Does the voltage drop to about 1.5 V and hold?

YES—Update the ECM/PCM if it does not have the latest software, or substitute a known-good ECM/PCM (see page 11-6), then recheck. If the symptom/indication goes away with a known-good ECM/PCM, replace the original ECM/PCM (see page 11-284). ■

NO—Replace the FTP sensor (see page 11-473). ■

DTC P0451: FTP Sensor Circuit Range/ Performance Problem (2005-2006 models)

NOTE: If DTC P2422 is stored at the same time as DTC P0451, troubleshoot DTC P2422 first, then recheck for DTC P0451.

1. Turn the ignition switch ON (II).
2. Clear the DTC with the HDS.
3. Start the engine, and let it idle.
4. Monitor the OBD STATUS for DTC P0451 in the DTCs MENU with the HDS.

   Does the screen indicate FAILED?

   YES—Go to step 5.

   NO—If the screen indicates PASSED, intermittent failure, system is OK at this time. Check for poor connections or loose terminals at the FTP sensor and the ECM/PCM. If the screen indicates NOT COMPLETED, go to step 3 and recheck.
5. Turn the ignition switch OFF.
6. Replace the FTP sensor (see page 11-473).
7. Turn the ignition switch ON (II).
8. Reset the ECM/PCM with the HDS.
9. Do the ECM/PCM idle learn procedure (see page 11-349).
10. Start the engine, and let it idle.
11. Check for Temporary DTCs or DTCs with the HDS.

    Are any Temporary DTCs or DTCs indicated?

    YES—If DTC P0451 is indicated, check for poor connections or loose terminals at the FTP sensor and the ECM/PCM, then go to step 1. If any other Temporary DTCs or DTCs are indicated, go to the indicated DTC's troubleshooting.

    NO—Go to step 12.
12. Monitor the OBD STATUS for DTC P0451 in the DTCs MENU with the HDS.

    Does the screen indicate PASSED?

    YES—Troubleshooting is complete. ■

    NO—If the screen indicates FAILED, check for poor connections or loose terminals at the FTP sensor and the ECM/PCM, then go to step 1. If the screen indicates NOT COMPLETED, go to step 10 and recheck.

DTC Troubleshooting (cont'd)

DTC P0452: FTP Sensor Circuit Low Voltage (2002-2004 models)

1. Check the vacuum lines at the FTP sensor for misrouting, leakage, breakage, or clogging.

   Are the vacuum lines OK?

   YES—Go to step 2.

   NO—Repair or replace vacuum lines as necessary. ■

2. Reset the ECM/PCM (see page 11-4).

3. Remove the fuel fill cap.

4. Turn the ignition switch ON (II).

5. Monitor the FTP sensor voltage with the HDS, or measure voltage between body ground and ECM/PCM connector terminal E14.

ECM/PCM CONNECTOR E (31P)

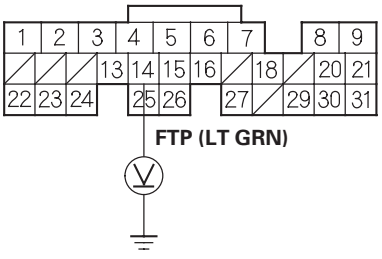

Wire side of female terminals

Is there about 2.5 V?

YES—Intermittent failure, system is OK at this time. Check for poor connections or loose terminals at the FTP sensor and the ECM/PCM. ■

NO—Go to step 6.

6. Turn the ignition switch OFF.

7. Reinstall the fuel fill cap.

8. Disconnect the FTP sensor 3P connector.

9. Turn the ignition switch ON (II).

10. Measure voltage between FTP sensor 3P connector terminals No. 1 and No. 2.

FTP SENSOR 3P CONNECTOR

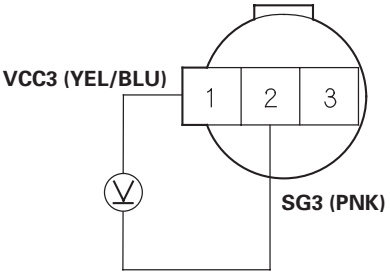

Wire side of female terminals

Is there about 5 V?

YES—Go to step 11.

NO—Repair open in the wire between the FTP sensor and the ECM/PCM (E5). ■

11. Measure voltage between FTP sensor 3P connector terminals No. 2 and No. 3.

FTP SENSOR 3P CONNECTOR

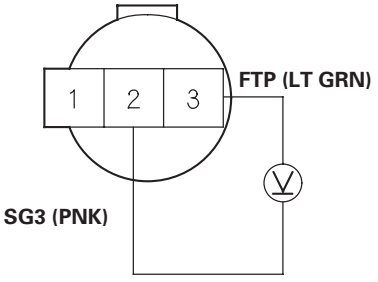

Wire side of female terminals

Is there about 5 V?

YES—Replace the FTP sensor (see page 11-473). ■

NO—Go to step 12.

12. Turn the ignition switch OFF.

13. Disconnect ECM/PCM connector E (31P).

14. Check for continuity between FTP 3P connector terminal No. 3 and body ground.

FTP SENSOR 3P CONNECTOR

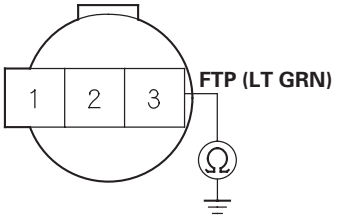

Wire side of female terminals

Is there continuity?

YES—Repair short in the wire between the FTP sensor and the ECM/PCM (E14). ■

NO—Update the ECM/PCM if it does not have the latest software, or substitute a known-good ECM/PCM (see page 11-6), then recheck. If the symptom/indication goes away with a known-good ECM/PCM, replace the original ECM/PCM (see page 11-284). ■

DTC Troubleshooting (cont'd)

DTC P0452: FTP Sensor Circuit Low Voltage (2005-2006 models)

1. Turn the ignition switch ON (II).
2. Clear the DTC with the HDS.
3. Turn the ignition switch OFF.
4. Remove the fuel fill cap.
5. Turn the ignition switch ON (II).
6. Check the FTP SENSOR in the DATA LIST with the HDS.

   Is about −7.3 kPa (−2.16 in.Hg, −55 mmHg), 0.3 V or less indicated?

   YES—Go to step 10.

   NO—Go to step 7.
7. Install the fuel fill cap.
8. Start the engine.
9. Monitor the OBD STATUS for DTC P0452 in the DTCs MENU with the HDS.

   Does the screen indicate FAILED?

   YES—Go to step 10.

   NO—If the screen indicates PASSED, intermittent failure, system is OK at this time. Check for poor connections or loose terminals at the FTP sensor and the ECM/PCM. If the screen indicates NOT COMPLETED, go to step 5 and recheck.
10. Turn the ignition switch OFF.
11. Disconnect the FTP sensor 3P connector.
12. Turn the ignition switch ON (II).
13. Check the FTP SENSOR in the DATA LIST with the HDS.

    Is about 7.3 kPa (2.15 in.Hg, 54.7 mmHg), 4.90 V indicated?

    YES—Go to step 20.

    NO—Go to step 14.
14. Measure voltage between FTP sensor 3P connector terminal No. 1 and body ground.

FTP SENSOR 3P CONNECTOR

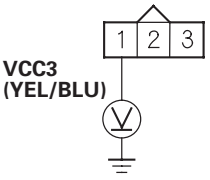

Wire side of female terminals

Is there about 5 V?

YES—Go to step 16.

NO—Go to step 15.

15. Measure voltage between ECM/PCM connector terminal E5 and body ground.

ECM/PCM CONNECTOR E (31P)

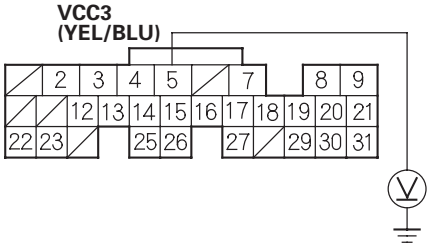

Wire side of female terminals

Is there about 5 V?

YES—Repair open in the wire between the ECM/PCM (E5) and the FTP sensor, then go to step 22.

NO—Go to step 28.

16. Turn the ignition switch OFF.

17. Jump the SCS line with the HDS.

18. Disconnect ECM/PCM connector E (31P).

19. Check for continuity between FTP sensor 3P connector terminal No. 2 and body ground.

FTP SENSOR 3P CONNECTOR

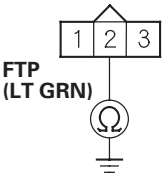

Wire side of female terminals

Is there continuity?

YES—Repair short in the wire between the ECM/PCM (E14) and the FTP sensor, then go to step 22.

NO—Go to step 28.

20. Turn the ignition switch OFF.

21. Replace the FTP sensor (see page 11-473).

22. Reconnect all connectors.

23. Turn the ignition switch ON (II).

24. Reset the ECM/PCM with the HDS.

25. Do the ECM/PCM idle learn procedure (see page 11-349).

26. Check for Temporary DTCs or DTCs with the HDS.

Are any Temporary DTCs or DTCs indicated?

YES—If DTC P0452 is indicated, check for poor connections or loose terminals at the FTP sensor and the ECM/PCM, then go to step 1. If any other Temporary DTCs or DTCs are indicated, go to the indicated DTC's troubleshooting.

NO—Go to step 27.

27. Monitor the OBD STATUS for DTC P0452 in the DTCs MENU with the HDS.

Does the screen indicate PASSED?

YES—Troubleshooting is complete. ■

NO—If the screen indicates FAILED, check for poor connections or loose terminals at the FTP sensor and the ECM/PCM, then go to step 1. If the screen indicates NOT COMPLETED, go to step 25 and recheck.

(cont'd)

DTC Troubleshooting (cont'd)

28. Update the ECM/PCM if it does not have the latest software, or substitute a known-good ECM/PCM (see page 11-6).

29. Check for Temporary DTCs or DTCs with the HDS.

    Are any Temporary DTCs or DTCs indicated?

    YES—If DTC P0452 is indicated, check for poor connections or loose terminals at the FTP sensor and the ECM/PCM, then go to step 1. If any other Temporary DTCs or DTCs are indicated, go to the indicated DTC's troubleshooting.

    NO—If the ECM/PCM was updated, troubleshooting is complete. If the ECM/PCM was substituted, replace the original ECM/PCM (see page 11-284). ■

DTC P0453: FTP Sensor Circuit High Voltage (2002-2004 models)

1. Check the vacuum lines of the FTP sensor for misrouting, leakage, breakage, or clogging.

   Are the vacuum lines OK?

   YES—Go to step 2.

   NO—Repair or replace vacuum lines as necessary. ■

2. Reset the ECM/PCM (see page 11-4).

3. Remove the fuel fill cap.

4. Turn the ignition switch ON (II).

5. Monitor the FTP sensor voltage with the HDS, or measure voltage between body ground and ECM/PCM connector terminal E14.

ECM/PCM CONNECTOR E (31P)

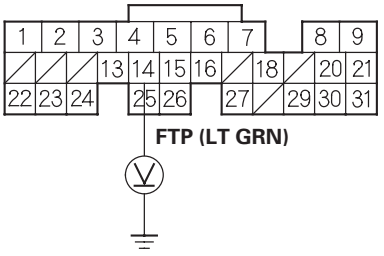

Wire side of female terminals

Is there about 2.5 V?

YES—Intermittent failure, system is OK at this time. Check for poor connections or loose terminals at the FTP sensor and the ECM/PCM. ■

NO—Go to step 6.

(cont'd)

DTC Troubleshooting (cont'd)

6. Turn the ignition switch OFF.
7. Reinstall the fuel fill cap.
8. Disconnect the FTP sensor 3P connector.
9. Turn the ignition switch ON (II).
10. Measure voltage between FTP 3P connector terminals No. 1 and No. 2.

FTP SENSOR 3P CONNECTOR

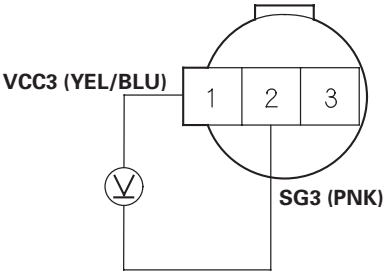

Wire side of female terminals

Is there about 5 V?

YES—Go to step 11.

NO—Repair open in the wire between the FTP sensor and the ECM/PCM (E4). ■

11. Measure voltage between FTP sensor 3P connector terminals No. 2 and No. 3.

FTP SENSOR 3P CONNECTOR

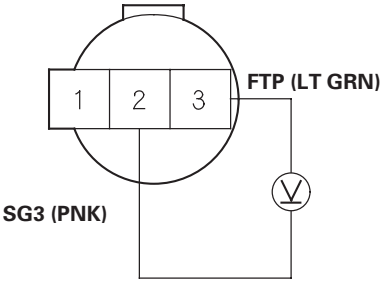

Wire side of female terminals

Is there about 5 V?

YES—Replace the FTP sensor (see page 11-473). ■

NO—Go to step 12.

12. Measure voltage between ECM/PCM connector terminals E4 and E14.

ECM/PCM CONNECTOR E (31P)

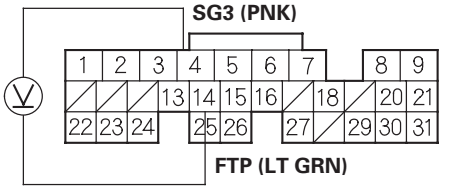

Wire side of female terminals

Is there about 5 V?

YES—Repair open in the wire between the FTP sensor and the ECM/PCM (E14). ■

NO—Update the ECM/PCM if it does not have the latest software, or substitute a known-good ECM/PCM (see page 11-6), then recheck. If the symptom/indication goes away with a known-good ECM/PCM, replace the original ECM/PCM (see page 11-284). ■

DTC P0453: FTP Sensor Circuit High Voltage (2005-2006 models)

1. Turn the ignition switch ON (II).
2. Clear the DTC with the HDS.
3. Turn the ignition switch OFF.
4. Remove the fuel fill cap.
5. Turn the ignition switch ON (II).
6. Check the FTP SENSOR in the DATA LIST with the HDS.

   Is about 7.3 kPa (2.16 in.Hg, 55 mmHg), 4.7 V, or more indicated?

   YES—Go to step 10.

   NO—Go to step 7.
7. Install the fuel fill cap.
8. Start the engine. Hold the engine speed at 3,000 rpm without load (in Park or neutral) until the radiator fan comes on, then let it idle.
9. Monitor the OBD STATUS for DTC P0453 in the DTCs MENU with the HDS.

   Does the screen indicate FAILED?

   YES—Go to step 10.

   NO—If the screen indicates PASSED, intermittent failure, system is OK at this time. Check for poor connections or loose terminals at the FTP sensor and the ECM/PCM. If the screen indicates NOT COMPLETED, go to step 6 and recheck.
10. Turn the ignition switch OFF.
11. Disconnect the FTP sensor 3P connector.
12. Connect FTP sensor 3P connector terminals No. 2 and No. 3 with a jumper wire.

FTP SENSOR 3P CONNECTOR

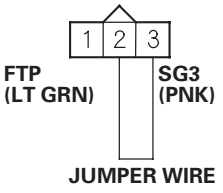

Wire side of female terminals

13. Turn the ignition switch ON (II).
14. Check the FTP SENSOR in the DATA LIST with the HDS.

    Is about 7.3 kPa (2.16 in.Hg, 55 mmHg), 4.7 V, or more indicated?

    YES—Go to step 15.

    NO—Go to step 25.
15. Measure voltage between FTP sensor 3P connector terminals No. 1 and No. 3.

FTP SENSOR 3P CONNECTOR

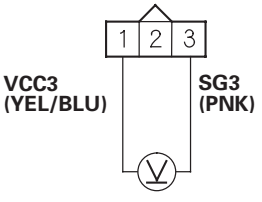

Wire side of female terminals

Is there about 5 V?

YES—Go to step 21.

NO—Go to step 16.

(cont'd)

DTC Troubleshooting (cont'd)

16. Turn the ignition switch OFF.

17. Jump the SCS line with the HDS.

18. Disconnect ECM/PCM connector E (31P).

19. Connect FTP sensor 3P connector terminal No. 3 to body ground with a jumper wire.

FTP SENSOR 3P CONNECTOR

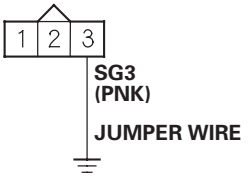

Wire side of female terminals

20. Check for continuity between ECM/PCM connector terminal E4 and body ground.

ECM/PCM CONNECTOR E (31P)

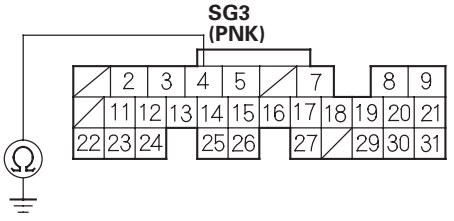

Wire side of female terminals

Is there continuity?

YES—Go to step 33.

NO—Repair open in the wire between the ECM/PCM (E4) and the FTP sensor, then go to step 27.

21. Turn the ignition switch OFF.

22. Connect ECM/PCM connector terminals E4 and E14 with a jumper wire.

ECM/PCM CONNECTOR E (31P)

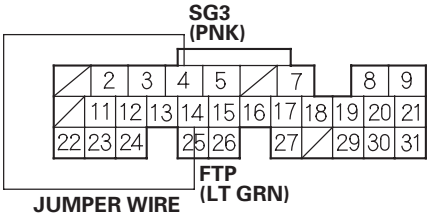

Wire side of female terminals

23. Turn the ignition switch ON (II).

24. Check the FTP SENSOR in the DATA LIST with the HDS.

    Is about 7.3 kPa (2.16 in.Hg, 55 mmHg), 4.7 V, or more indicated?

    YES—Go to step 33.

    NO—Repair open in the wire between the ECM/PCM (E14) and the FTP sensor, then go to step 27.

25. Turn the ignition switch OFF.

26. Replace the FTP sensor (see page 11-473).

27. Reconnect all connectors.

28. Turn the ignition switch ON (II).

29. Reset the ECM/PCM with the HDS.

30. Do the ECM/PCM idle learn procedure (see page 11-349).

31. Check for Temporary DTCs or DTCs with the HDS.

    Are any Temporary DTCs or DTCs indicated?

    YES—If DTC P0453 is indicated, check for poor connections or loose terminals at the FTP sensor and the ECM/PCM, then go to step 1. If any other Temporary DTCs or DTCs are indicated, go to the indicated DTC's troubleshooting.

    NO—Go to step 32.

32. Monitor the OBD STATUS for DTC P0453 in the DTCs MENU with the HDS.

    Does the screen indicate PASSED?

    YES—Troubleshooting is complete. ■

    NO—If the screen indicates FAILED, check for poor connections or loose terminals at the FTP sensor and the ECM/PCM, then go to step 1. If the screen indicates NOT COMPLETED, go to step 30 and recheck.

33. Update the ECM/PCM if it does not have the latest software, or substitute a known-good ECM/PCM (see page 11-6).

34. Check for Temporary DTCs or DTCs with the HDS.

    Are any Temporary DTCs or DTCs indicated?

    YES—If DTC P0453 is indicated, check for poor connections or loose terminals at the FTP sensor and the ECM/PCM, then go to step 1. If any other Temporary DTCs or DTCs are indicated, go to the indicated DTC's troubleshooting.

    NO—If the ECM/PCM was updated, troubleshooting is complete. If the ECM/PCM was substituted, replace the original ECM/PCM (see page 11-284). ■

DTC Troubleshooting (cont'd)

DTC P0457: EVAP System Leak Detected/Fuel Fill Cap Loose or Missing (2005-2006 models)

1. Check the fuel fill cap (the cap must say ''Tighten to click''). It should turn 1/4 turn after it's tight, then it clicks.

   Is the correct fuel fill cap installed and properly tightened?

   YES—Go to step 2.

   NO—Replace or tighten the cap, then go to step 19.

2. Check the fuel fill cap seal (A) and the fuel fill pipe mating surface (B). Make sure the fuel fill cap tether cord (C) is not caught under the cap.

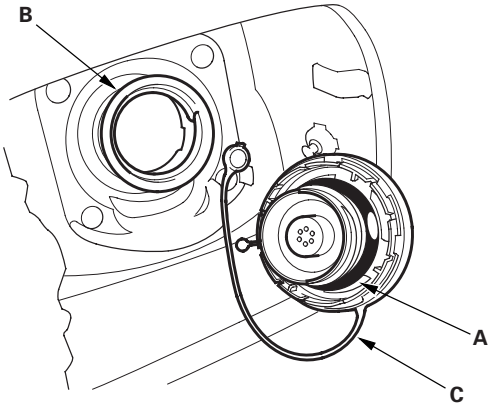

   Is the fuel fill cap seal missing or damaged, is the fuel fill pipe damaged, or is the tether cord caught under the cap?

   YES—Replace the fuel fill cap or the fuel fill pipe, then go to step 19.

   NO—Go to step 3.

3. Turn the ignition switch ON (II).

4. Clear the DTC with the HDS.

5. Do the EVAP FUNCTION TEST in the INSPECTION MENU with the HDS.

   Is the result OK?

   YES—Intermittent failure, system is OK at this time. Check for poor connections or loose terminals at the FTP sensor or the EVAP canister vent shut valve and the ECM/PCM.■

   NO—Go to step 6.

6. Turn the ignition switch OFF.

7. Remove the EVAP canister vent shut valve from the EVAP canister (see page 11-474).

8. Connect the 2P connector to the EVAP canister vent shut valve.

9. Turn the ignition switch ON (II).

10. Do the EVAP CVS ON in the INSPECTION MENU with the HDS.

11. Check the EVAP canister vent shut valve (A) operation.

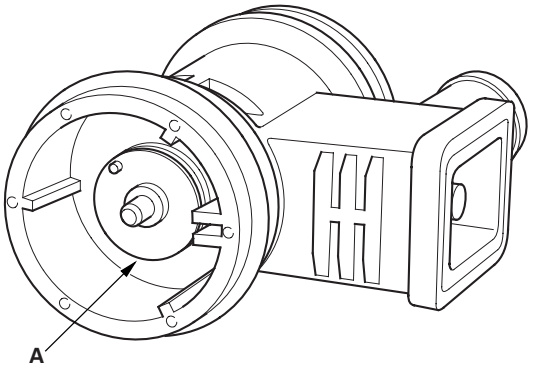

   Does the valve operate?

   YES—Check the routing of the EVAP canister vent tube, then go to step 18.

   NO—Go to step 12.

12. Turn the ignition switch OFF.

13. Replace the EVAP canister vent shut valve (see page 11-474).

14. Turn the ignition switch ON (II).

15. Reset the ECM/PCM with the HDS.

16. Do the ECM/PCM idle learn procedure (see page 11-349).

17. Do the EVAP FUNCTION TEST in the INSPECTION MENU with the HDS.

    Is the result OK?

    YES—Troubleshooting is complete. ■

    NO—Check for poor connections or loose terminals at the FTP sensor or the EVAP canister vent shut valve and the ECM/PCM, then go to step 16.

18. Reinstall the EVAP canister vent shut valve (see page 11-474).

19. Turn the ignition switch ON (II).

20. Reset the ECM/PCM with the HDS.

21. Do the ECM/PCM idle learn procedure (see page 11-349).

22. Do the EVAP FUNCTION TEST in the INSPECTION MENU with the HDS.

    Is the result OK?

    YES—Troubleshooting is complete. ■

    NO—Check for poor connections or loose terminals at the FTP sensor or the EVAP canister vent shut valve and the ECM/PCM, then go to step 2.

DTC Troubleshooting (cont'd)

DTC P0496: EVAP System High Purge Flow (2005-2006 models)

1. Turn the ignition switch ON (II).
2. Clear the DTC with the HDS.
3. Do the EVAP FUNCTION TEST in the INSPECTION MENU with the HDS.

   Is the result OK?

   YES—Intermittent failure, system is OK at this time. Check for poor connections or loose terminals at the FTP sensor, the EVAP canister purge valve, or the EVAP canister vent shut valve and the ECM/PCM. ■

   NO—Go to step 4.
4. Turn the ignition switch OFF.
5. Replace the EVAP canister purge valve (see page 11-412).
6. Turn the ignition switch ON (II).
7. Reset the ECM/PCM with the HDS.
8. Do the ECM/PCM idle learn procedure (see page 11-349).
9. Do the EVAP FUNCTION TEST in the INSPECTION MENU with the HDS.

   Is the result OK?

   YES—Troubleshooting is complete. ■

   NO—Check for poor connections or loose terminals at the FTP sensor, the EVAP canister purge valve, or the EVAP canister vent shut valve and the ECM/PCM, then go to step 1.

DTC P0497: EVAP System Low Purge Flow (2004 model)

Special Tools Required
Vacuum pump/gauge, 0—30 in.Hg, Snap-on YA4000A or equivalent, commercially available

1. Turn the ignition switch ON (II).

2. Measure voltage between ECM/PCM connector terminal B21 and body ground.

ECM/PCM CONNECTOR B (24P)

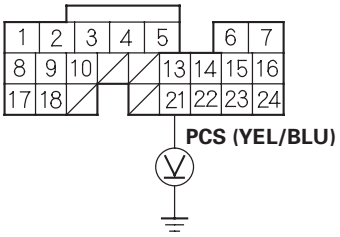

Wire side of female terminals

Is there battery voltage?

YES—Go to step 3.

NO—Go to step 8.

3. Turn the ignition switch OFF.

4. Disconnect the vacuum hose (A) from the EVAP canister purge valve (B) in the engine compartment and connect the vacuum pump/gauge, 0—30 in.Hg, to the hose.

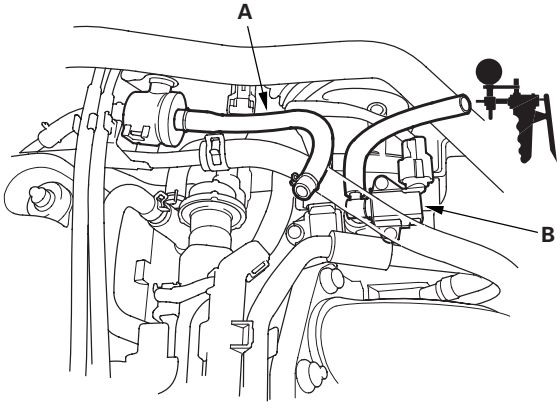

5. Connect ECM/PCM connector terminal B21 to body ground with a jumper wire.

ECM/PCM CONNECTOR B (24P)

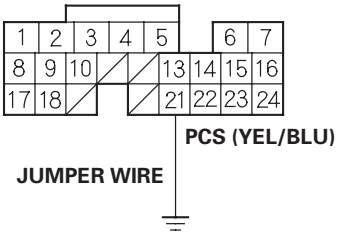

Wire side of female terminals

6. Turn the ignition switch ON (II).

7. Apply vacuum to the hose.

Does the valve hold vacuum?

YES—Replace the EVAP canister purge valve (see page 11-412). ■

NO—Go to step 16.

8. Turn the ignition switch OFF.

9. Disconnect ECM/PCM connector B (24P).

10. Connect ECM/PCM connector terminal B21 to body ground with a jumper wire.

ECM/PCM CONNECTOR B (24P)

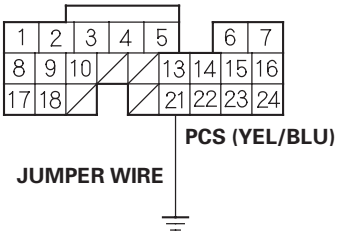

Wire side of female terminals

(cont'd)

DTC Troubleshooting (cont'd)

11. Disconnect the EVAP canister purge valve 2P connector.

12. Check for continuity between EVAP canister purge valve 2P connector terminal No. 2 and body ground.

EVAP CANISTER PURGE VALVE 2P CONNECTOR

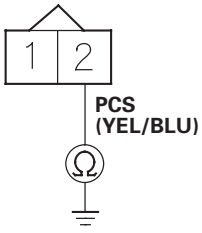

Wire side of female terminals

Is there continuity?

YES—Go to step 13.

NO—Repair open in the wire between the EVAP canister purge valve the ECM/PCM (B21). ■

13. Turn the ignition switch ON (II).

14. Measure voltage between EVAP canister purge valve 2P connector terminal No. 1 and body ground.

EVAP CANISTER PURGE VALVE 2P CONNECTOR

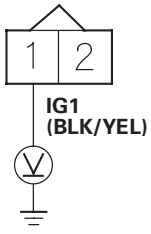

Wire side of female terminals

Is there battery voltage?

YES—Go to step 15.

NO—Repair open in the wire between the EVAP canister purge valve and the No. 4 ACG (10 A) fuse in the under-dash fuse/relay box. ■

15. Measure resistance between EVAP canister purge valve 2P connector terminals No. 1 and No. 2.

EVAP CANISTER PURGE VALVE 2P CONNECTOR

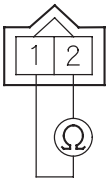

Terminal side of male terminals

Is there about 33 Ω at room temperature?

YES—Update the ECM/PCM if it does not have the latest software, or substitute a known-good ECM/PCM (see page 11-6), then recheck. If the symptom/indication goes away with a known-good ECM/PCM, replace the original ECM/PCM (see page 11-284). ■

NO—Replace the EVAP canister purge valve (see page 11-412). ■

16. Measure voltage between ECM/PCM connector terminal E21 and body ground.

ECM/PCM CONNECTOR E (31P)

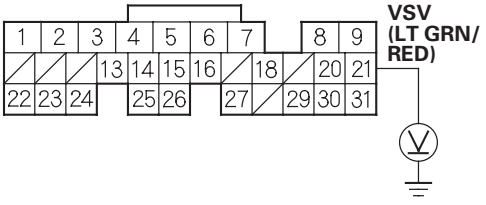

Wire side of female terminals

Is there battery voltage?

YES—Go to step 17.

NO—Go to step 22.

17. Turn the ignition switch OFF.

18. Disconnect the vacuum hose from the EVAP canister vent filter line (A) and connect the vacuum pump/gauge, 0—30 in.Hg, to the hose.

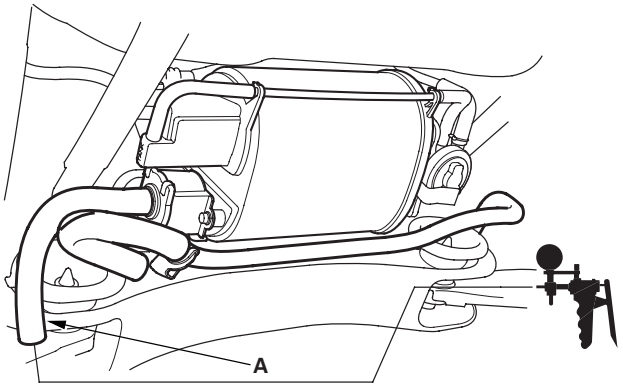

19. Connect ECM/PCM connector terminal E21 to body ground with a jumper wire.

ECM/PCM CONNECTOR E (31P)

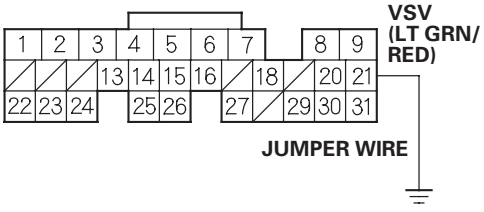

Wire side of female terminals

20. Turn the ignition switch ON (II).

21. Apply vacuum to the hose.

Does the valve hold vacuum?

YES—Inspect the vacuum line between the EVAP canister purge valve and the EVAP canister. ■

NO—Replace the EVAP canister vent shut valve (see page 11-474). ■

22. Turn the ignition switch OFF.

23. Disconnect ECM connector E (31P).

24. Connect ECM/PCM connector terminal E21 to body ground with a jumper wire.

ECM/PCM CONNECTOR E (31P)

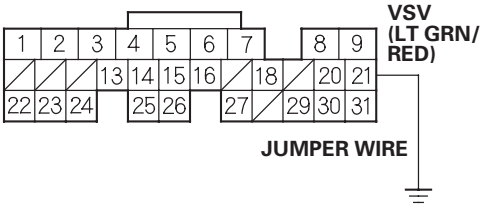

Wire side of female terminals

25. Disconnect the EVAP canister vent shut valve 2P connector.

26. Check for continuity between EVAP canister vent shut valve 2P connector terminal No. 2 and body ground.

EVAP CANISTER VENT SHUT VALVE 2P CONNECTOR

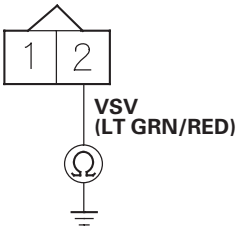

Wire side of female terminals

Is there continuity?

YES—Go to step 27.

NO—Repair open in the wire between the EVAP canister vent shut valve and the ECM/PCM (E21). ■

(cont'd)

DTC Troubleshooting (cont'd)

27. Turn the ignition switch ON (II).

28. Measure voltage between EVAP canister vent shut valve 2P connector terminal No. 1 and body ground.

EVAP CANISTER VENT SHUT VALVE 2P CONNECTOR

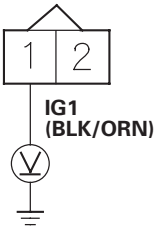

Wire side of female terminals

Is there battery voltage?

YES—Go to step 29.

NO—Repair open in the wire between the EVAP canister vent shut valve and the No. 4 ACG (10 A) fuse in the under-dash fuse/relay box.■

29. Measure resistance between EVAP canister vent shut valve 2P connector terminals No. 1 and No. 2.

EVAP CANISTER VENT SHUT VALVE 2P CONNECTOR

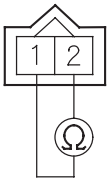

Terminal side of male terminals

Is there about 33 Ω at room temperature?

YES—Update the ECM/PCM if it does not have the latest software, or substitute a known-good ECM/PCM (see page 11-6), then recheck. If the symptom/indication goes away with a known-good ECM/PCM, replace the original ECM/PCM (see page 11-284).■

NO—Replace the EVAP canister vent shut valve (see page 11-474).■

DTC P0497: EVAP System Low Purge Flow (2005-2006 models)

Special Tools Required
- Vacuum/pressure gauge, 0—4 in.Hg, 07JAZ-001000B
- Fuel pressure gauge attachment set 07AAJ-S6MA150
- Vacuum pump/gauge, 0—30 in.Hg, Snap-on YA4000A or equivalent, commercially available

1. Check the fuel fill cap installation.

   Is the fuel fill cap installed and properly tightened?

   YES—Go to step 2.

   NO—Properly install the fuel fill cap (the cap mast say ''Tighten to click''). It should turn 1/4 turn after it's tight, then go to step 24.

2. Turn the ignition switch ON (II).

3. Clear the DTC with the HDS.

4. Do the EVAP FUNCTION TEST in the INSPECTION MENU with the HDS.

   Is the result OK?

   YES—Intermittent failure, system is OK at this time. Check for poor connections or loose terminals at the FTP sensor, the EVAP canister purge valve, the EVAP canister vent shut valve, and the ECM/PCM. ■

   NO—Go to step 5.

5. Check for a loose or damaged EVAP canister purge line between the intake manifold and the EVAP canister purge valve.

   Is the line OK?

   YES—Go to step 6.

   NO—Reconnect or repair the EVAP canister purge line, then go to step 23.

6. Disconnect the vacuum hose (A) from the EVAP canister purge valve (B) in the engine compartment, and connect a T-fitting (C) from the vacuum gauge and the vacuum pump/gauge, 0—30 in.Hg, to the EVAP canister purge valve as shown.

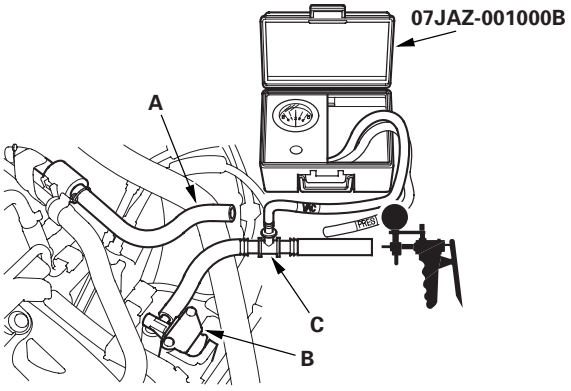

7. Do the EVAP PCS ON in the INSPECTION MENU with the HDS.

8. Slowly apply about 2 kPa (0.6 in.Hg, 15 mmHg) of vacuum to the hose.

   Does it hold vacuum?

   YES—Check for blockage on the EVAP canister purge line between the intake manifold and the EVAP canister purge valve. If the vacuum hose is OK, replace the EVAP canister purge valve, then go to step 23.

   NO—Go to step 9.

9. Reconnect the vacuum hose to the EVAP canister purge valve.

(cont'd)

DTC Troubleshooting (cont'd)

10. Disconnect the vacuum hose from the EVAP canister purge line (EVAP canister side), and connect a T-fitting (A) from the vacuum gauge and the vacuum pump/gauge, 0—30 in.Hg, to the hose as shown.

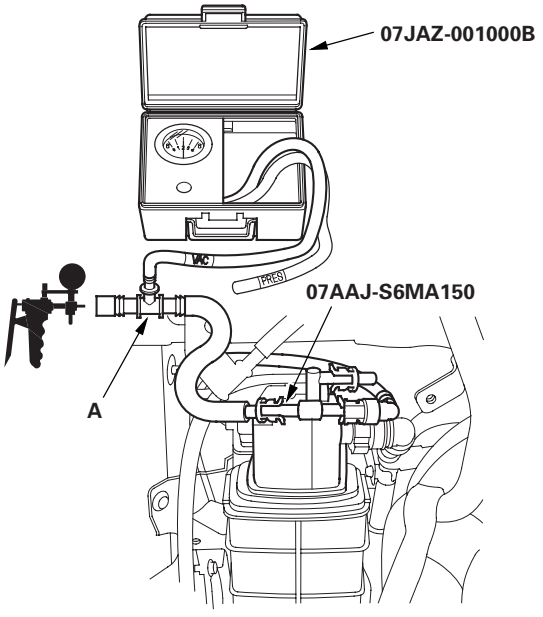

11. Do the EVAP PCS ON in the INSPECTION MENU with the HDS.

12. Slowly apply about 2 kPa (0.6 in.Hg, 15 mmHg) of vacuum to the hose.

    Does it hold vacuum?

    YES—Check for a restricted EVAP canister purge line between the EVAP canister purge valve and the EVAP canister, then go to step 23.

    NO—Go to step 13.

13. Remove the FTP sensor with its connector connected (see page 11-473).

14. Connect a T-fitting (A) from the vacuum gauge and the vacuum pump/gauge, 0—30 in.Hg, to the FTP sensor (B) as shown.

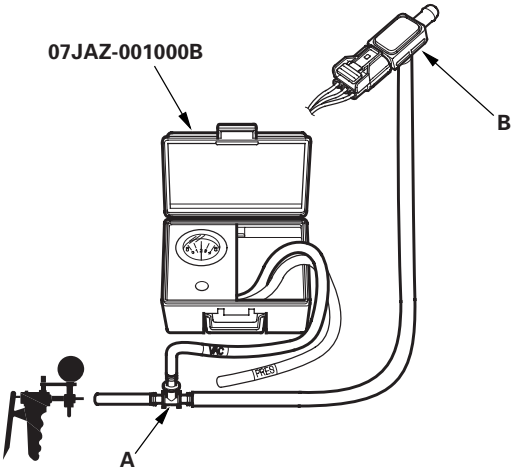

15. Note the FTP SENSOR reading in the DATA LIST with the HDS.

16. Slowly apply about 1.3 kPa (0.4 in.Hg, 10 mmHg) of vacuum to the hose.

17. Check the FTP SENSOR in the DATA LIST with the HDS.

    Is the difference more than 1.1 kPa (0.31 in.Hg, 8 mmHg.) before and after applying vacuum?

    YES—Go to step 18.

    NO—Replace the FTP sensor (see page 11-473), then go to step 23.

18. Reconnect the vacuum hose to the EVAP canister purge line (EVAP canister side) and reinstall the FTP sensor.

19. Disconnect the vacuum hose (A) from the EVAP canister purge line (EVAP canister purge valve side), and connect a T-fitting (B) from the vacuum gauge and the vacuum pump/gauge, 0—30 in.Hg, to the hose.

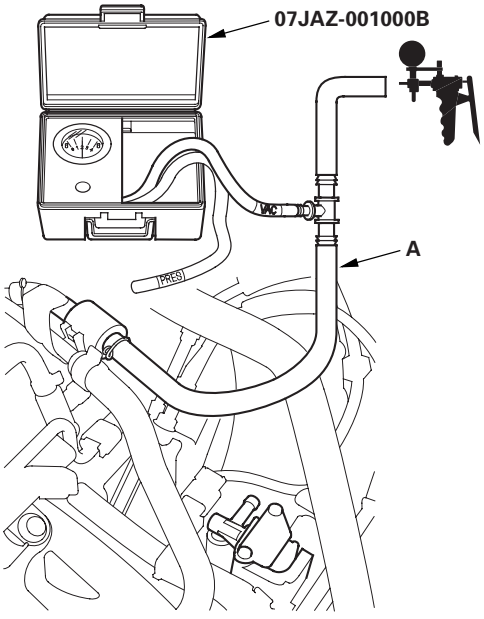

20. Do the EVAP CVS ON in the INSPECTION MENU with the HDS.

21. Slowly apply about 2 kPa (0.6 in.Hg, 15 mmHg) of vacuum to the hose.

    Does the hose hold vacuum?

    YES—Check for blockage at the EVAP canister port, then go to step 22.

    NO—Replace the EVAP canister vent shut valve, then go to step 22.

22. Install the FTP sensor (see page 11-473).

23. Reconnect all hoses.

24. Turn the ignition switch ON (II).

25. Reset the ECM/PCM with the HDS.

26. Do the ECM/PCM idle learn procedure (see page 11-349).

27. Do the EVAP FUNCTION TEST in the INSPECTION MENU with the HDS.

    Is the result OK?

    YES—Troubleshooting is complete. ■

    NO—Check for poor connections or loose terminals at the FTP sensor, the EVAP canister purge valve, the EVAP canister vent shut valve, and the ECM/PCM, then go to step 1.

DTC Troubleshooting (cont'd)

DTC P0498: EVAP Canister Vent Shut Valve Circuit Low Voltage
(2005-2006 models)

1. Turn the ignition switch ON (II).
2. Clear the DTC with the HDS, then wait 5 seconds.
3. Check for Temporary DTCs or DTCs with the HDS.

   Is DTC P0498 indicated?

   YES—Go to step 6.

   NO—Go to step 4.
4. Do the EVAP CVS ON in the INSPECTION MENU with the HDS.
5. Check for Temporary DTCs or DTCs with the HDS.

   Is DTC P0498 indicated?

   YES—Go to step 6.

   NO—Intermittent failure, system is OK at this time. Check for poor connections or loose terminals at the EVAP canister vent shut valve and the ECM/PCM. ■
6. Turn the ignition switch OFF.
7. Disconnect the EVAP canister vent shut valve 2P connector.
8. Measure resistance between EVAP canister vent shut valve 2P connector terminals No. 1 and No. 2.

EVAP CANISTER VENT SHUT VALVE 2P CONNECTOR

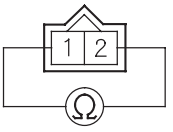

Terminal side of male terminals

Is there about 25—30 Ω at room temperature?

YES—Go to step 9.

NO—Go to step 12.

9. Jump the SCS line with the HDS.
10. Disconnect ECM/PCM connector E (31P).
11. Check for continuity between ECM/PCM connector terminal E19 and body ground.

ECM/PCM CONNECTOR E (31P)

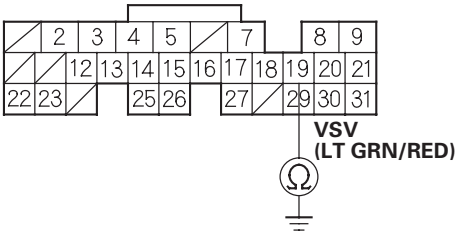

Wire side of female terminals

Is there continuity?

YES—Repair short in the wire between the EVAP canister vent shut valve and the ECM/PCM (E19), then go to step 13.

NO—Go to step 19.

12. Replace the EVAP canister vent shut valve (see page 11-474).

13. Reconnect all connectors.

14. Turn the ignition switch ON (II).

15. Reset the ECM/PCM with the HDS.

16. Do the ECM/PCM idle learn procedure (see page 11-349).

17. Do the EVAP CVS ON in the INSPECTION MENU with the HDS.

18. Check for Temporary DTCs or DTCs with the HDS.

    Are any Temporary DTCs or DTCs indicated?

    YES—If DTC P0498 is indicated, check for poor connections or loose terminals at the EVAP canister vent shut valve and the ECM/PCM, then go to step 1. If any other Temporary DTCs or DTCs are indicated, go to the indicated DTC's troubleshooting.

    NO—Troubleshooting is complete. ■

19. Update the ECM/PCM if it does not have the latest software, or substitute a known-good ECM/PCM (see page 11-6).

20. Do the EVAP CVS ON in the INSPECTION MENU with the HDS.

21. Check for Temporary DTCs or DTCs with the HDS.

    Are any Temporary DTCs or DTCs indicated?

    YES—If DTC P0498 is indicated, check for poor connections or loose terminals at the EVAP canister vent shut valve and the ECM/PCM, then go to step 1. If any other Temporary DTCs or DTCs are indicated, go to the indicated DTC's troubleshooting.

    NO—If the ECM/PCM was updated, troubleshooting is complete. If the ECM/PCM was substituted, replace the original ECM/PCM (see page 11-284). ■

DTC Troubleshooting (cont'd)

DTC P0499: EVAP Canister Vent Shut Valve Circuit High Voltage
(2005-2006 models)

1. Turn the ignition switch ON (II).
2. Clear the DTC with the HDS, then wait 5 seconds.
3. Do the EVAP CVS ON in the INSPECTION MENU with the HDS.
4. Check for Temporary DTCs or DTCs with the HDS.

   Is DTC P0499 indicated?

   YES—Go to step 5.

   NO—Intermittent failure, system is OK at this time. Check for poor connections or loose terminals at the EVAP canister vent shut valve and the ECM/PCM. ■
5. Turn the ignition switch OFF.
6. Disconnect the EVAP canister vent shut valve 2P connector.
7. Turn the ignition switch ON (II).
8. Measure voltage between EVAP canister vent shut valve 2P connector terminal No. 2 and body ground.

EVAP CANISTER VENT SHUT VALVE 2P CONNECTOR

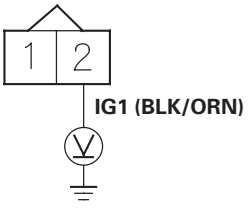

Wire side of female terminals

Is there battery voltage?

YES—Go to step 9.

NO—Repair open in the wire between the EVAP canister vent shut valve and the No. 4 ACG (10 A) fuse in the under-dash fuse/relay box, then go to step 16.

9. Turn the ignition switch OFF.
10. Measure resistance between EVAP canister vent shut valve 2P connector terminals No. 1 and No. 2.

EVAP CANISTER VENT SHUT VALVE 2P CONNECTOR

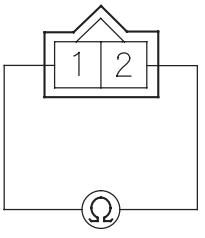

Terminal side of male terminals

Is there about 25—30 Ω at room temperature?

YES—Go to step 11.

NO—Go to step 15.

11. Jump the SCS line with the HDS.

12. Disconnect ECM/PCM connector E (31P).

13. Connect EVAP canister vent shut valve 2P connector terminal No. 1 to body ground with a jumper wire.

EVAP CANISTER VENT SHUT VALVE 2P CONNECTOR

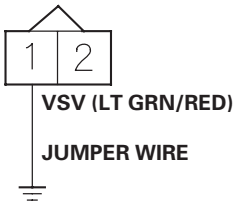

Wire side of female terminals

14. Check for continuity between ECM/PCM connector terminal E19 and body ground.

ECM/PCM CONNECTOR E (31P)

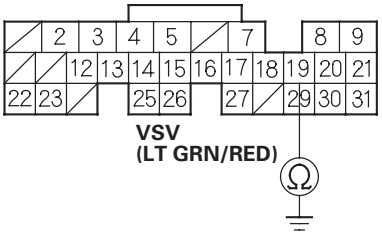

Wire side of female terminals

Is there continuity?

YES—Go to step 22.

NO—Repair open in the wire between the EVAP canister vent shut valve and the ECM/PCM (E19), then go to step 16.

15. Replace the EVAP canister vent shut valve (see page 11-474).

16. Reconnect all connectors.

17. Turn the ignition switch ON (II).

18. Reset the ECM/PCM with the HDS.

19. Do the ECM/PCM idle learn procedure (see page 11-349).

20. Do the EVAP CVS ON in the INSPECTION MENU with the HDS.

21. Check for Temporary DTCs or DTCs with the HDS.

Are any Temporary DTCs or DTCs indicated?

YES—If DTC P0499 is indicated, check for poor connections or loose terminals at the EVAP canister vent shut valve and the ECM/PCM, then go to step 1. If any other Temporary DTCs or DTCs are indicated, go to the indicated DTC's troubleshooting.

NO—Troubleshooting is complete. ■

22. Update the ECM/PCM if it does not have the latest software, or substitute a known-good ECM/PCM (see page 11-6).

23. Do the EVAP CVS ON in the INSPECTION MENU with the HDS.

24. Check for Temporary DTCs or DTCs with the HDS.

Are any Temporary DTCs or DTCs indicated?

YES—If DTC P0499 is indicated, check for poor connections or loose terminals at the EVAP canister vent shut valve and the ECM/PCM, then go to step 1. If any other Temporary DTCs or DTCs are indicated, go to the indicated DTC's troubleshooting.

NO—If the ECM/PCM was updated, troubleshooting is complete. If the ECM/PCM was substituted, replace the original ECM/PCM (see page 11-284). ■

DTC Troubleshooting (cont'd)

DTC P1454: FTP Sensor Circuit Range/ Performance Problem (2005-2006 models)

DTC P2422: EVAP Canister Vent Shut Valve Stuck Closed Malfunction (2005-2006 models)

1. Turn the ignition switch ON (II).
2. Clear the DTC with the HDS.
3. Turn the ignition switch OFF.
4. Remove the fuel fill cap, and wait 1 minute.
5. Check the FTP SENSOR in the DATA LIST with the HDS.

   Is it between −0.67 kPa and 0.67 kPa (−0.2−0.2 in.Hg, −5−5 mmHg), or 2.4−2.6 V?

   YES—Go to step 6.

   NO—Go to step 17.
6. Install the fuel fill cap.
7. Clear the DTC with the HDS.
8. Start the engine. Hold the engine speed at 3,000 rpm without load (in Park or neutral) until the radiator fan comes on, then let it idle.
9. Monitor the OBD STATUS for DTC P1454 or P2422 in the DTCs MENU with the HDS.

   Does the screen indicate FAILED?

   YES—Go to step 10.

   NO—If the screen indicates PASSED, intermittent failure, system is OK at this time. Check for poor connections or loose terminals at the FTP sensor, or the EVAP canister vent shut valve and the ECM/ PCM. If the screen indicates NOT COMPLETED, go to step 7 and recheck.
10. Clear the DTC with the HDS.
11. Turn the ignition switch OFF.
12. Remove the EVAP canister vent shut valve from the EVAP canister (see page 11-474).
13. Connect the 2P connector to the EVAP canister vent shut valve.
14. Turn the ignition switch ON (II).
15. Do the EVAP CVS ON in the INSPECTION MENU with the HDS.
16. Check the EVAP canister vent shut valve (A) operation.

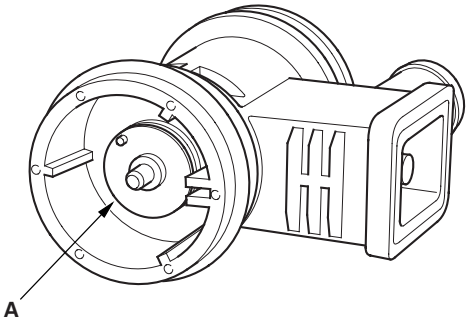

Does the valve operate?

YES—Check for a blockage in the EVAP canister, and install the EVAP canister vent shut valve, then go to step 23.

NO—Replace the EVAP canister vent shut valve (see page 11-474), then go to step 23.

17. Disconnect the air tube (A) from the FTP sensor (B).

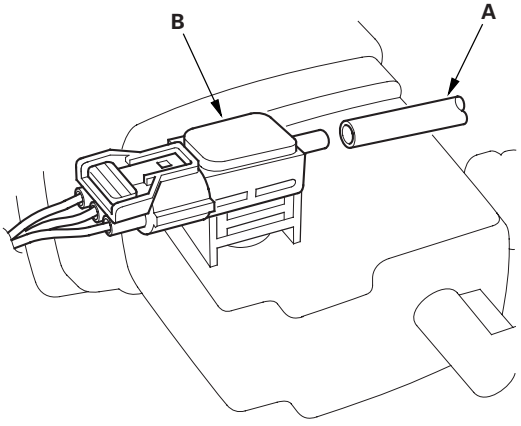

18. Check the FTP SENSOR in the DATA LIST with the HDS.

    Is it between −0.67 kPa and 0.67 kPa (−0.2−0.2 in.Hg, −5−5 mmHg), or 2.4−2.6 V?

    YES—Check for a blockage in the FTP sensor air tube, then go to step 23.

    NO—Go to step 19.

19. Turn the ignition switch OFF.

20. Remove the FTP sensor (A) from the EVAP canister with its connector connected.

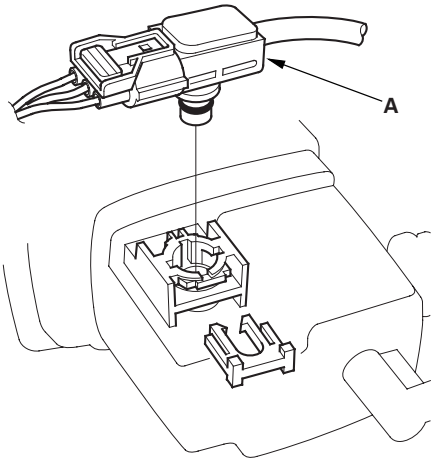

21. Turn the ignition switch ON (II).

22. Check the FTP SENSOR in the DATA LIST with the HDS.

    Is it between −0.67 kPa and 0.67 kPa (−0.2−0.2 in.Hg, −5−5 mmHg), or 2.4−2.6 V?

    YES—Check for debris or clogging at the EVAP canister and the FTP sensor port, then go to step 23.

    NO—Replace the FTP sensor (see page 11-473), then go to step 23.

23. Turn the ignition switch ON (II).

24. Reset the ECM/PCM with the HDS.

25. Do the ECM/PCM idle learn procedure (see page 11-349).

26. Start the engine. Hold the engine speed at 3,000 rpm without load (in Park or neutral) until the radiator fan comes on, then let it idle.

27. Check for Temporary DTCs or DTCs with the HDS.

    Are any Temporary DTCs or DTCs indicated?

    YES—If DTC P1454 and/or P2422 is indicated, check for poor connections or loose terminals at the FTP sensor, or the EVAP canister vent shut valve and the ECM/PCM, then go to step 1. If any other Temporary DTCs or DTCs are indicated, go to the indicated DTC's troubleshooting.

    NO—Go to step 28.

(cont'd)

DTC Troubleshooting (cont'd)

28. Monitor the OBD STATUS for DTC P1454 in the DTCs MENU with the HDS.

    Does the screen indicate PASSED?

    YES—Troubleshooting is complete. ■

    NO—If the screen indicates FAILED, check for poor connections or loose terminals at the FTP sensor, or the EVAP canister vent shut valve and the ECM/PCM, then go to step 1. If the screen indicates NOT COMPLETED, go to step 26 and recheck.

DTC P1456: EVAP Control System Leakage (Fuel Tank System) (2002-2004 models)

NOTICE

The fuel system is designed to allow specified maximum vacuum and pressure conditions. Do not deviate from the vacuum and pressure tests as indicated in these procedures. Excessive pressure/vacuum would damage the EVAP components or cause eventual fuel tank failure.

Special Tools Required

Vacuum pump/gauge, 0—30 in.Hg, Snap-on YA4000A or equivalent, commercially available

Please note that this is a two-trip code. Once cleared, it cannot be reproduced in one trip. Also, certain specific driving and ambient conditions must occur before the ECM/PCM will complete the system checks. Additional test drives may still not meet the specific conditions needed to reproduce the code.

Follow these troubleshooting procedures carefully to ensure the integrity of the system and to comfirm the cause of the problem or code.

NOTE: Fresh fuel has a higher volatility that will create greater pressure/vacuum. The optimum condition for testing is fresh fuel, and must be less than a full tank of gas. If possible, to assist in leak detection, add 1 gallon of fresh fuel to the tank (as long as it will not fill the tank), just before starting these procedures.

Fuel Fill Cap Check

1. Check the fuel fill cap (the cap must say ''If not tightened 3 clicks check engine light may come on'').

   Is the proper fuel fill cap installed and properly tightened?

   YES—Go to step 2.

   NO—Replace or tighten the cap. ■

2. Check the fuel fill cap seal and the fuel fill pipe sealing surface.

   Is the fuel fill cap seal missing or damaged, or is the fill pipe damaged?

   YES—Replace the fuel fill cap (gray or black colored cap), or the fuel fill pipe. ■

   NO—The fuel fill cap is OK. Go to step 3.

EVAP Canister Purge Valve Test

3. Disconnect the vacuum hose from the EVAP canister purge valve (A), and connect the vacuum pump/gauge, 0—30 in.Hg, to the hose.

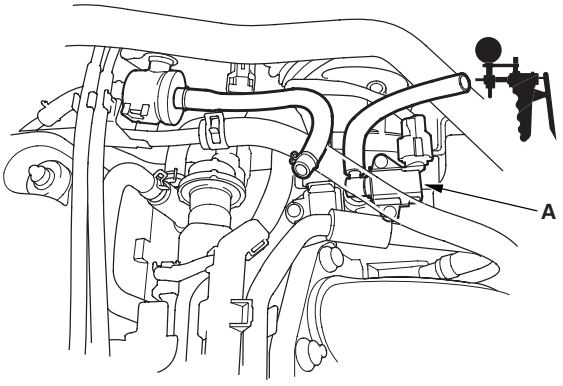

4. Turn the ignition switch ON (II).

5. Apply vacuum to the hose.

   Does the valve hold vacuum?

   YES—The EVAP canister purge valve is OK. Go to step 11.

   NO—Go to step 6.

6. Turn the ignition switch OFF.

7. Disconnect the EVAP canister purge valve 2P connector.

(cont'd)

DTC Troubleshooting (cont'd)

8. Check for continuity between EVAP canister purge valve 2P connector terminal No. 2 and body ground.

EVAP CANISTER PURGE VALVE 2P CONNECTOR

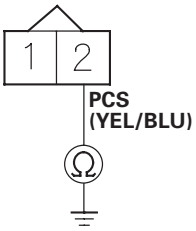

Wire side of female terminals

Is there continuity?

YES—Go to step 9.

NO—Replace the EVAP canister purge valve (see page 11-412).■

9. Disconnect ECM/PCM connector B (24P).

10. Check for continuity between EVAP canister purge valve 2P connector terminal No. 2 and body ground.

EVAP CANISTER PURGE VALVE 2P CONNECTOR

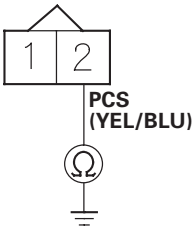

Wire side of female terminals

Is there continuity?

YES—Repair short in the wire between the EVAP canister purge valve and the ECM/PCM (B21).■

NO—Update the ECM/PCM if it does not have the latest software, or substitute a known-good ECM/PCM (see page 11-6), then recheck. If the symptom/indication goes away with a known-good ECM/PCM, replace the original ECM/PCM (see page 11-284).■

EVAP Bypass Solenoid Valve Test

11. Disconnect both vacuum hoses from the EVAP two way valve (A), and connect the vacuum pump/gauge, 0—30 in.Hg, to the canister port on the EVAP two way valve.

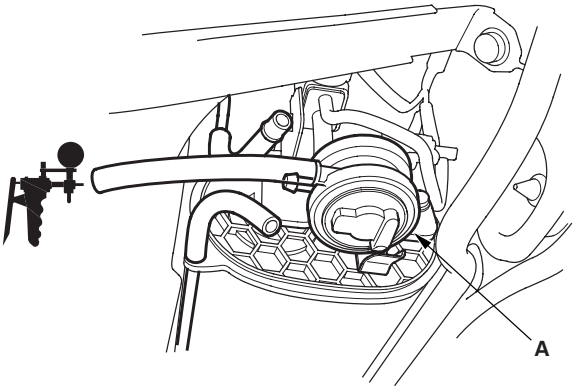

12. Turn the EVAP bypass solenoid valve on with the HDS, or connect ECM/PCM connector terminal E20 to body ground with a jumper wire.

ECM/PCM CONNECTOR E (31P)

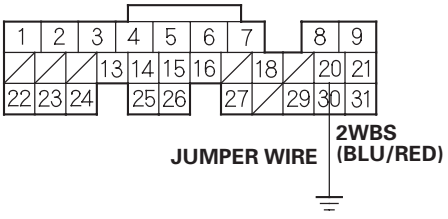

Wire side of female terminals

13. Turn the ignition switch ON (II).

14. Apply vacuum to the hose.

Does the valve hold vacuum?

YES—Go to step 15.

NO—Go to step 20.

15. Turn the ignition switch OFF.

16. Disconnect the EVAP bypass solenoid valve 2P connector.

17. Check for continuity between EVAP bypass solenoid valve 2P connector terminal No. 2 and body ground.

EVAP BYPASS SOLENOID VALVE 2P CONNECTOR

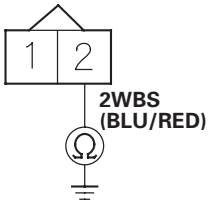

Wire side of female terminals

Is there continuity?

YES—Go to step 18.

NO—Repair open in the wire between the EVAP bypass solenoid valve and the ECM/PCM (E20).■

18. Turn the ignition switch ON (II).

19. Measure voltage between EVAP bypass solenoid valve 2P connector terminal No. 1 and body ground.

EVAP BYPASS SOLENOID VALVE 2P CONNECTOR

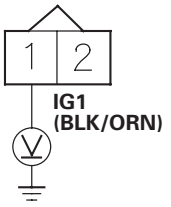

Wire side of female terminals

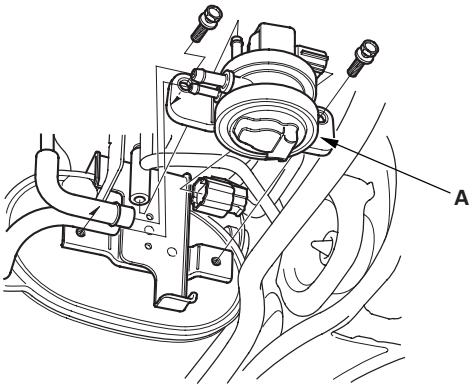

Is there battery voltage?

YES—Replace the EVAP two way/bypass solenoid valve (A).■

NO—Repair open in the wire between the EVAP bypass solenoid valve and the No. 4 ACG (10 A) fuse.■

(cont'd)

DTC Troubleshooting (cont'd)

20. Plug the fuel tank port (A) of the EVAP two way valve.

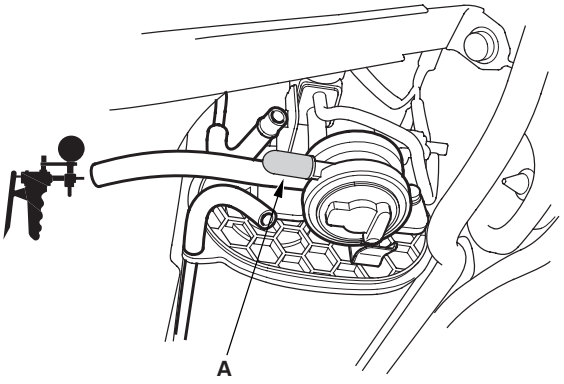

21. While monitoring the FTP sensor voltage with the HDS, or measuring the voltage between ECM/PCM connector terminals E4 and E14, slowly pump the vacuum pump until the voltage drops to about 1.5 V. Stop applying vacuum at about 1.5 V or damage to the system could occur.

ECM/PCM CONNECTOR E (31P)

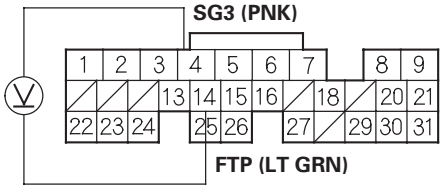

Wire side of female terminals

Does the voltage drop to 1.5 V and hold for at least 20 seconds?

YES—The EVAP bypass solenoid valve/EVAP two way valve is OK. Go to step 22.

NO—Repair the leak from EVAP bypass solenoid valve, EVAP two way valve, and FTP sensor. ■

EVAP Canister Vent Shut Valve Test

22. Disconnect the vacuum hose from the EVAP canister vent filter line (A), and connect a vacuum pump/gauge, 0—30 in.Hg, to the hose.

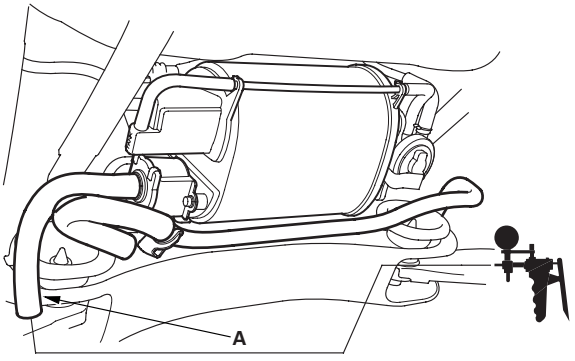

23. Turn the ignition switch ON (II).

24. Apply vacuum to the hose with 5 strokes of the pump.

    Does the valve hold vacuum?

    YES—Go to step 25.

    NO—EVAP canister vent shut valve is OK. Go to step 30.

25. Turn the ignition switch OFF.

26. Disconnect the EVAP canister vent shut valve 2P connector.

27. Check for continuity between EVAP canister vent shut valve 2P connector terminal No. 2 and body ground.

EVAP CANISTER VENT SHUT VALVE 2P CONNECTOR

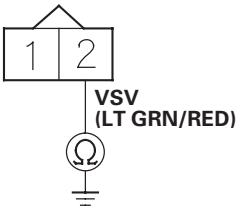

Wire side of female terminals

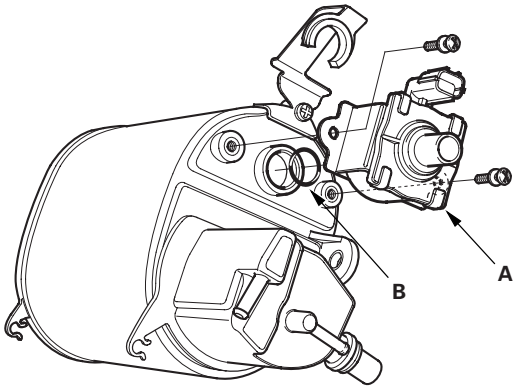

Is there continuity?

YES—Go to step 28.

NO—Replace the EVAP canister vent shut valve (A) and O-ring (B). ■

28. Disconnect ECM/PCM connector E (31P).

29. Check for continuity between EVAP canister vent shut valve 2P connector terminal No. 2 and body ground.

EVAP CANISTER VENT SHUT VALVE 2P CONNECTOR

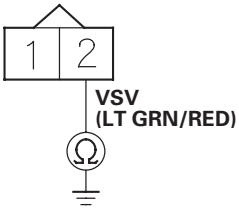

Wire side of female terminals

Is there continuity?

YES—Repair short in the wire between the EVAP canister vent shut valve and the ECM/PCM (E21). ■

NO—Update the ECM/PCM if it does not have the latest software, or substitute a known-good ECM/PCM (see page 11-6), then recheck. If the symptom/indication goes away with a known-good ECM/PCM, replace the original ECM/PCM (see page 11-284). ■

Vacuum Hoses and Connections Test

30. Perform the fuel tank vapor control valve test (see page 11-469).

Is the fuel tank vapor control valve OK?

YES—Go to step 31.

NO—Replace the fuel tank vapor control valve (see page 11-471). ■

31. Tighten the fuel cap 3 ''clicks,'' then monitor the FTP readings with the HDS.

32. Start the engine, and let it idle for 5 minutes.

33. Check the FTP sensor readings.

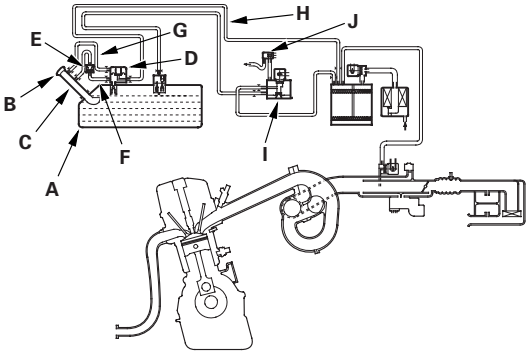

Is the reading above 0.5 kPa (0.16 in.Hg, 4 mmHg) pressure, or about 3 V?

YES—Update the ECM/PCM if it does not have the latest software, or substitute a known-good ECM/PCM (see page 11-6), then recheck. If the symptom/indication goes away with a known-good ECM/PCM, replace the original ECM/PCM (see page 11-284). ■

NO—Check these parts for leaks: ■

- Fuel tank (A)
- Fuel fill cap (B)
- Fuel fill pipe (C)
- Fuel tank vapor control valve (D)
- Fuel tank vapor recirculation valve (E)
- Fuel tank vapor recirculation tube (F)
- Fuel tank vapor signal tube (G)
- Fuel tank vapor control vent tube (H)
- EVAP two way valve (I)
- FTP sensor (J)
  – Repair or replace any leaking parts.

DTC Troubleshooting (cont'd)

DTC P1457: EVAP Control System Leakage (EVAP Canister System) (2002-2004 models)

NOTICE

The fuel system is designed to allow specified maximum vacuum and pressure conditions. Do not deviate from the vacuum and pressure tests as indicated in these procedures. Excessive pressure/vacuum would damage the EVAP components or cause eventual fuel tank failure.

Special Tools Required

Vacuum pump/gauge, 0—30 in.Hg, Snap-on YA4000A or equivalent, commercially available

This is a two-trip code; once cleared, it cannot be reproduced in one trip. Also, certain specific driving and ambient conditions must occur before the ECM/PCM will complete the system checks. Additional test drives may still not meet the specific conditions needed to reproduce the code. If necessary, use the test drive procedures for setting the readiness code (see page 11-90).

Therefore, follow these troubleshooting procedures carefully to ensure the integrity of the system and to comfirm the cause of the problem or code.

NOTE: Fresh fuel has a higher volatility that will create greater pressure/vacuum. The optimum condition for testing is fresh fuel, and must be less than a full tank of fuel. If possible, to assist in leak detection, add 1 gallon of fresh fuel to the tank (as long as it will not fill the tank), just before starting these procedures.

EVAP Canister Purge Valve Test

1. Disconnect the vacuum hose from the EVAP canister purge valve (A), and connect the vacuum pump/gauge, 0—30 in.Hg, to the hose.

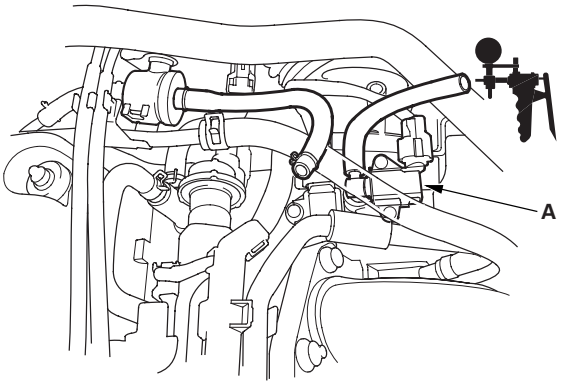

2. Turn the EVAP canister purge valve on with the HDS, or connect ECM/PCM connector terminal B21 to body ground with a jumper wire.

ECM/PCM CONNECTOR B (24P)

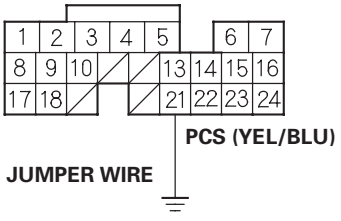

Wire side of female terminals

3. Turn the ignition switch ON (II).

4. Apply vacuum to the hose.

   Does the valve hold vacuum?

   YES—Go to step 5.

   NO—The EVAP canister purge valve is OK. Go to step 10.

5. Turn the ignition switch OFF.

6. Disconnect the EVAP canister purge valve 2P connector.

7. Check for continuity between EVAP canister purge valve 2P connector terminal No. 2 and body ground.

EVAP CANISTER PURGE VALVE 2P CONNECTOR

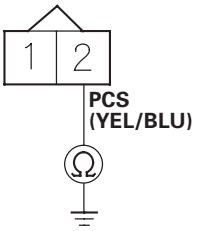

Wire side of female terminals

Is there continuity?

YES—Go to step 8.

NO—Repair open in the wire between the EVAP canister purge valve and the ECM/PCM (B21).■

8. Turn the ignition switch ON (II).

9. Measure voltage between EVAP canister purge valve 2P connector terminal No. 1 and body ground.

EVAP CANISTER PURGE VALVE 2P CONNECTOR

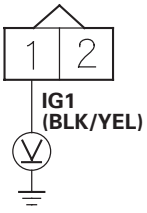

Wire side of female terminals

Is there battery voltage?

YES—Replace the EVAP canister purge valve (see page 11-412).■

NO—Repair open in the wire between the EVAP canister purge valve and the No. 4 ACG (10 A) fuse.■

EVAP Bypass Solenoid Valve Test

10. Disconnect both vacuum hoses from the EVAP two way valve (A), and connect the vacuum pump/gauge, 0—30 in.Hg, to the canister port on the two way valve.

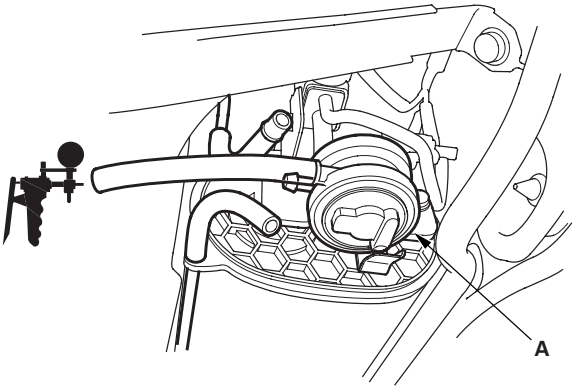

11. Turn the ignition switch ON (II).

12. Apply vacuum to the hose.

Does the valve hold vacuum?

YES—The EVAP two way/bypass solenoid valve is OK. Go to step 18.

NO—Go to step 13.

13. Turn the ignition switch OFF.

14. Disconnect the EVAP bypass solenoid valve 2P connector.

(cont'd)

DTC Troubleshooting (cont'd)

15. Check for continuity between EVAP bypass solenoid valve 2P connector terminal No. 2 and body ground.

EVAP BYPASS SOLENOID VALVE 2P CONNECTOR

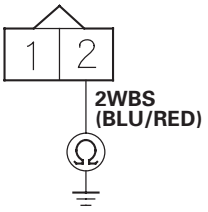

Wire side of female terminals

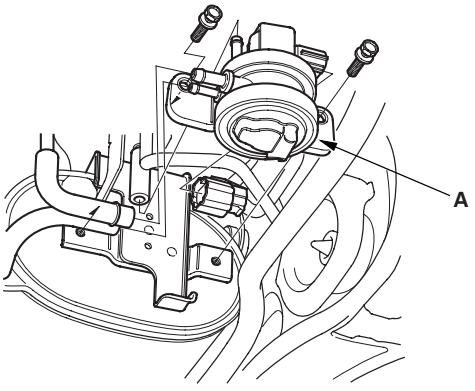

Is there continuity?

YES—Go to step 16.

NO—Replace the EVAP two way/bypass solenoid valve (A).■

16. Disconnect ECM/PCM connector E (31P).

17. Check for continuity between EVAP bypass solenoid valve 2P connector terminal No. 2 and body ground.

EVAP BYPASS SOLENOID VALVE 2P CONNECTOR

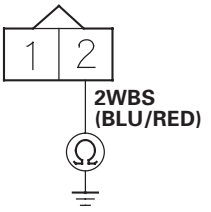

Wire side of female terminals

Is there continuity?

YES—Repair short in the wire between the EVAP bypass solenoid valve and the ECM/PCM (E20).■

NO—Update the ECM/PCM if it does not have the latest software, or substitute a known-good ECM/PCM (see page 11-6), then recheck. If the symptom/indication goes away with a known-good ECM/PCM, replace the original ECM/PCM (see page 11-284).■

EVAP Canister Vent Shut Valve Test

18. Disconnect the vacuum hose from the EVAP canister vent filter line (A), and connect the vacuum pump/gauge, 0—30 in.Hg, to the hose.

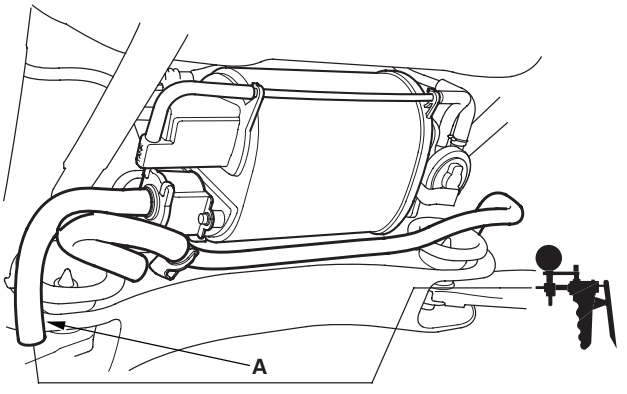

19. Turn the EVAP canister vent shut valve on with the HDS, or connect ECM/PCM connector terminal E21 to body ground with a jumper wire.

ECM/PCM CONNECTOR E (31P)

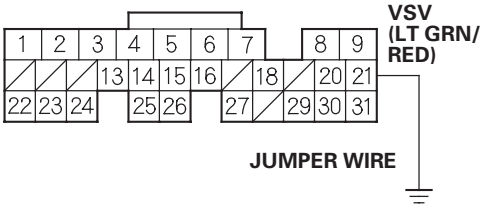

Wire side of female terminals

20. Turn the ignition switch ON (II).

21. Apply vacuum to the hose.

    Does the valve hold vacuum?

    YES—The EVAP canister vent shut valve is OK. Go to step 27.

    NO—Go to step 22.

22. Turn the ignition switch OFF.

23. Disconnect the EVAP canister vent shut valve 2P connector.

24. Check for continuity between EVAP canister vent shut valve 2P connector terminal No. 2 and body ground. If using the HDS to turn the EVAP canister vent shut valve ON, turn the ignition switch ON (II).

EVAP CANISTER VENT SHUT VALVE 2P CONNECTOR

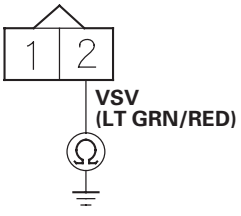

Wire side of female terminals

Is there continuity?

YES—Go to step 25.

NO—Repair open in the wire between the EVAP canister vent shut valve and the ECM/PCM (E21). ■

25. Turn the ignition switch ON (II).

26. Measure voltage between EVAP canister vent shut valve 2P connector terminal No. 1 and body ground.

EVAP CANISTER VENT SHUT VALVE 2P CONNECTOR

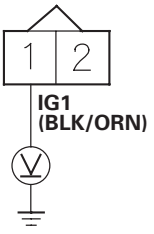

Wire side of female terminals

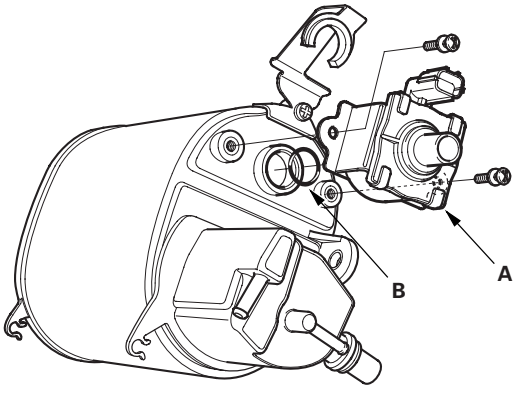

Is there battery voltage?

YES—Replace the EVAP canister vent shut valve (A) and the O-ring (B). ■

NO—Repair open in the wire between the EVAP canister vent shut valve and the No. 4 ACG (10 A) fuse. ■

(cont'd)

DTC Troubleshooting (cont'd)

Canister System Leak Test

27. Turn the ignition switch OFF.

28. Connect 2 three-way T-fittings (A) into the hose from the EVAP canister to the EVAP two way valve. Connect the FTP sensor to one of the T-fittings and the vacuum pump/gauge, 0—30 in.Hg, to the other.

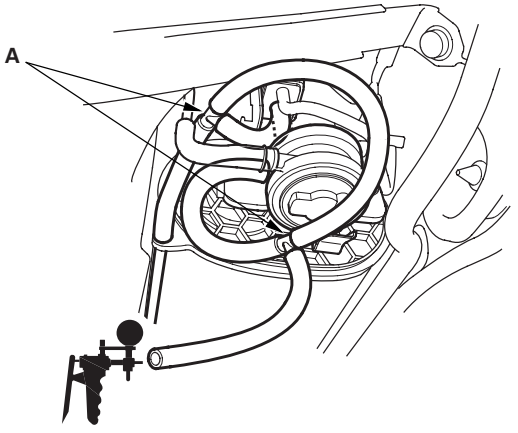

29. Remove the vent hose from the EVAP canister vent shut valve (A), and cap the port (B) to seal the fresh air vent for the EVAP canister.

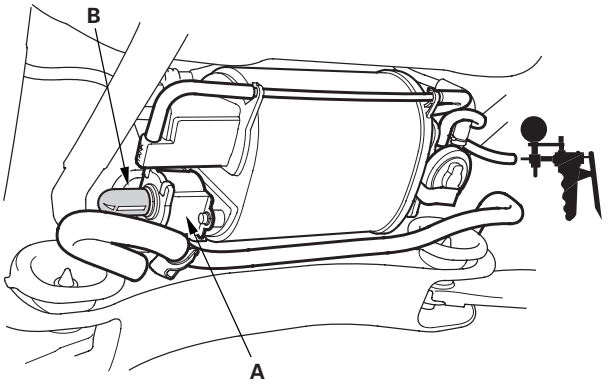

30. Turn the ignition switch ON (II).

31. While monitoring FTP sensor voltage with the HDS, or measuring voltage between ECM/PCM connector terminals E4 and E14, slowly pump the vacuum pump.

ECM/PCM CONNECTOR E (31P)

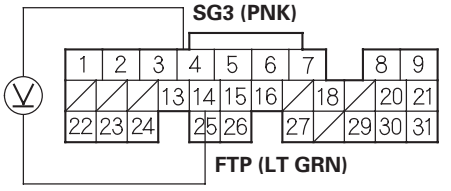

Wire side of female terminals

32. Continue to pump until the voltage drops to about 1.5 V. Make sure your vacuum pump has no leak.

33. Monitor the voltage for 20 seconds.

    Does the voltage drop to 1.5 V and hold for at least 20 seconds?

    YES—Inspect the EVAP canister vent shut valve line and connections. ■

    NO—Go to step 34.

34. Turn the ignition switch OFF.

35. Disconnect the quick-connect fitting (A) from the EVAP canister, and plug the canister port (B).

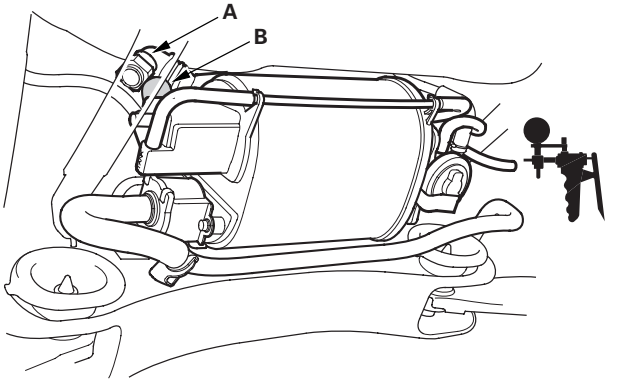

36. Turn the ignition switch ON (II).

37. While monitoring FTP sensor voltage with the HDS, or measuring voltage between ECM/PCM connector terminals E4 and E14, slowly pump the vacuum pump.

ECM/PCM CONNECTOR E (31P)

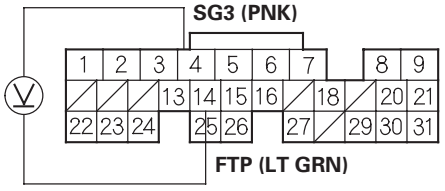

Wire side of female terminals

38. Continue to pump until the voltage drops to about 1.5 V. Make sure your vacuum pump has no leak.

39. Monitor the voltage for 20 seconds.

Does the voltage drop to 1.5 V and hold for at least 20 seconds?

YES—Inspect the fuel tank vapor control line and connections. Also test the fuel tank vapor control valve (see page 11-469). ■

NO—Go to step 40.

40. Turn the ignition switch OFF.

41. Disconnect the purge line hose (A) from the canister at the metal line, and plug the hose (B).

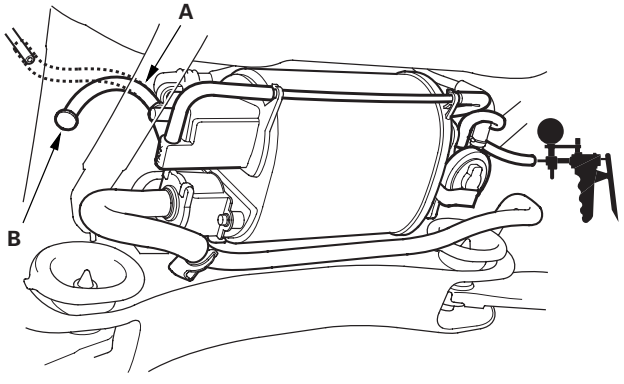

42. Turn the ignition switch ON (II).

43. While monitoring FTP sensor voltage with the HDS, or measuring voltage between ECM/PCM connector terminals E4 and E14, slowly pump the vacuum pump.

ECM/PCM CONNECTOR E (31P)

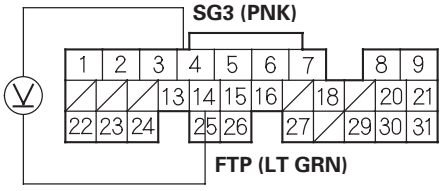

Wire side of female terminals

44. Continue to pump until the voltage drops to about 1.5 V. Make sure your vacuum pump has no leak.

45. Monitor the voltage for 20 seconds.

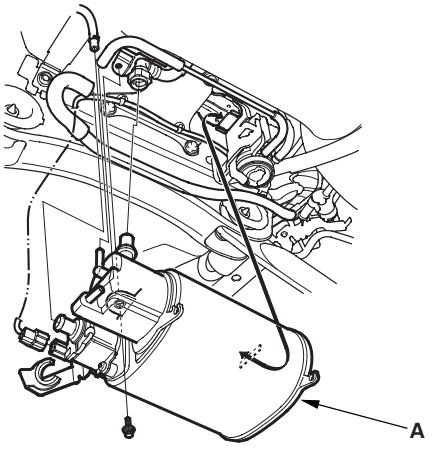

Does the voltage drop to 1.5 V and hold for at least 20 seconds?

YES—Inspect the EVAP canister purge valve line and connections. If they are OK, do the EVAP two way valve test (see page 11-468) and the fuel tank vapor control valve test (see page 11-469). ■

NO—Replace the EVAP canister (A). ■

EVAP Two Way Valve Test

Special Tools Required
- Vacuum/pressure gauge, 0—4 in.Hg, 07JAZ-001000B
- Vacuum pump/gauge, 0—30 in.Hg, Snap-on YA4000A or equivalent, commercially available

2002-2004 models

1. Remove the fuel fill cap.

2. Disconnect the vapor line from the EVAP two way valve (A). Connect the line to a T-fitting (B) from the vacuum gauge and the vacuum pump/gauge, 0—30 in.Hg, as shown.

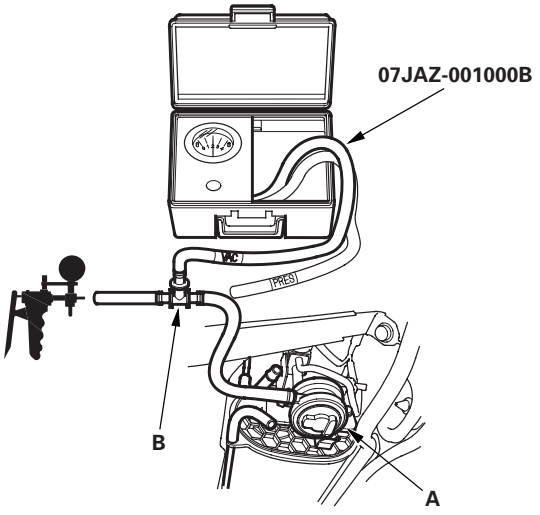

3. Apply vacuum slowly and continuously while watching the gauge. The vacuum should stabilize momentarily at 0.8—2.1 kPa (0.2—0.6 in.Hg, 6—16 mmHg).
   If the vacuum stabilizes (valve opens) below 0.8 kPa (0.2 in.Hg, 6 mmHg) or above 2.1 kPa (0.6 in.Hg, 16 mmHg), install a new valve and retest.

4. Move the vacuum pump hose from the vacuum fitting to the pressure fitting, and move the vacuum gauge hose from the vacuum side to the pressure side (A) as shown.

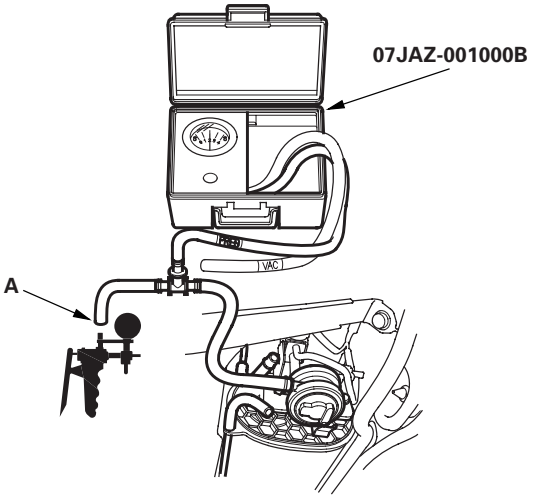

5. Slowly pressurize the vapor line while watching the gauge. The pressure should stabilize momentarily above 1.0 kPa (0.3 in.Hg, 8 mmHg).

   - If the pressure momentarily stabilizes (valve opens) above 1.0 kPa (0.3 in.Hg, 8 mmHg), the valve is OK.
   - If the pressure stabilizes below 1.0 kPa (0.3 in.Hg, 8 mmHg), install a new valve and retest.

Fuel Tank Vapor Control Valve Test

Special Tools Required
Vacuum pump/gauge, 0—30 in.Hg, Snap-on YA4000A or equivalent, commercially available

2002-2004 models

Float Test

1. Make sure the fuel tank is less than half full.
2. Remove the fuel fill cap to relieve fuel tank pressure, then reinstall the cap.
3. Disconnect the fuel tank vapor recirculation tube (A), and connect the vacuum pump/gauge, 0—30 in.Hg, to the tube.

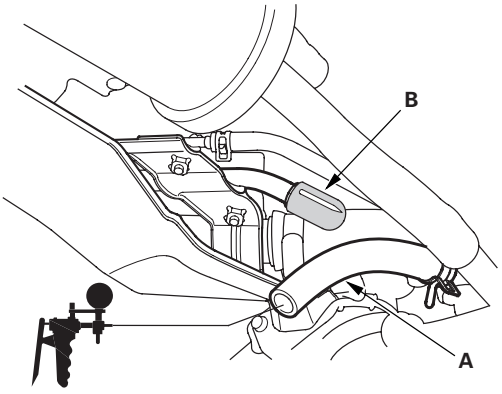

4. Plug the line (B).
5. Apply vacuum to the fuel tank vapor recirculation tube.
   - If the vacuum holds, replace the fuel tank vapor control valve (see page 11-471).
   - If the vacuum does not hold, the float is OK. Do the valve test.

Valve Test

1. Make sure the fuel tank is less than half full.
2. Remove the fuel fill cap.
3. Disconnect the fuel tank vapor signal tube (A).

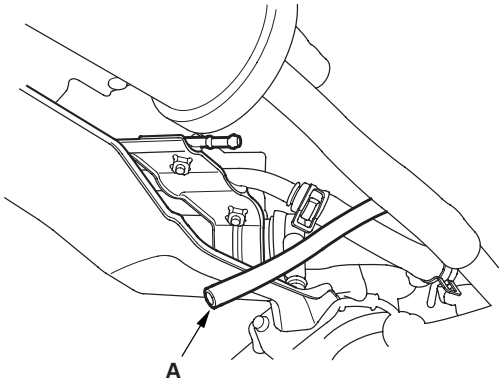

4. Disconnect the vacuum hoses (A) from the EVAP canister (B), then plug the ports with plugs (C).

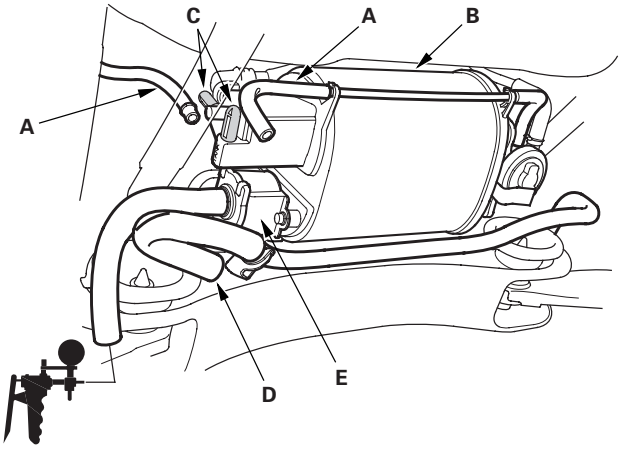

5. Disconnect the vacuum hose (D) from the EVAP canister vent shut valve (E), and connect the vacuum pump/gauge, 0—30 in.Hg, to the vacuum hose.
6. Pump the vacuum pump 80 times.
   - If the vacuum holds, go to step 7.
   - If the vacuum does not hold, go to step 10.

(cont'd)

Fuel Tank Vapor Control Valve Test (cont'd)

7. Connect another vacuum pump/gauge, 0—30 in.Hg, to the fuel tank vapor signal tube (A).

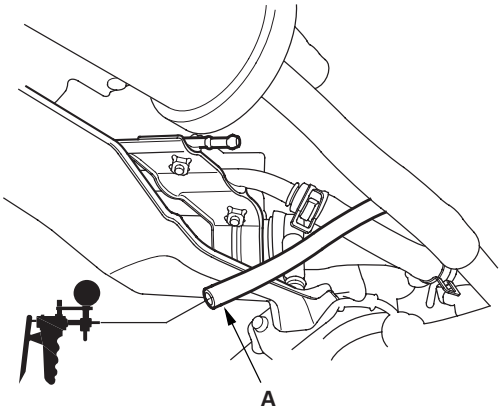

8. Apply vacuum (1 pump) to the fuel tank vapor signal tube (A), then check the vacuum on the pump in step 6.

   - If the vacuum holds, replace the fuel tank vapor control valve (see page 11-471).
   - If the vacuum is released, go to step 9.

9. Fill the fuel tank with fuel, then check for fuel in the EVAP two way valve (A), and fuel tank vapor recirculation hose (B).

   NOTE: At either location, tiny droplets of fuel are normal.

   - If fuel runs out of the hoses at either location, replace the fuel tank vapor control valve.
   - If the fuel does not run out of the hoses at either location, the fuel tank vapor system is OK.

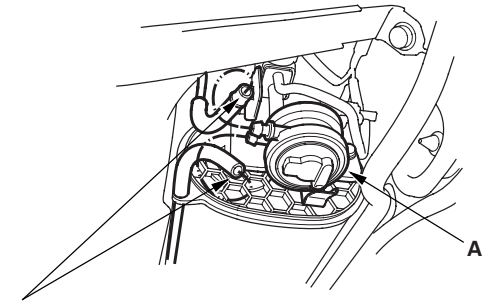

Check for fuel running out.

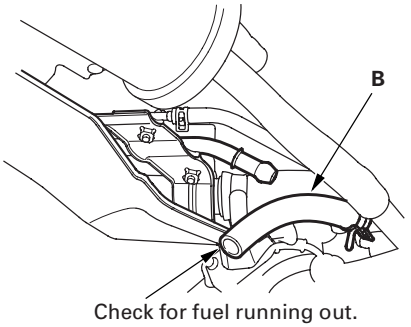

Check for fuel running out.

10. Disconnect the fuel tank vapor vent tube from the EVAP canister, then plug the port on the canister. Reapply vacuum (80 pumps).

    - If the vacuum holds, replace the fuel tank vapor control valve (see page 11-471).
    - If the vacuum does not hold, inspect the EVAP canister vent shut valve O-ring. If the O-ring is OK, replace the EVAP canister and repeat step 4.

Fuel Tank Vapor Control Valve Replacement

2002-2004 models

1. Remove the fuel tank (see page 11-377).

2. Remove the fuel tank vapor control valve (A) from the fuel tank (B).

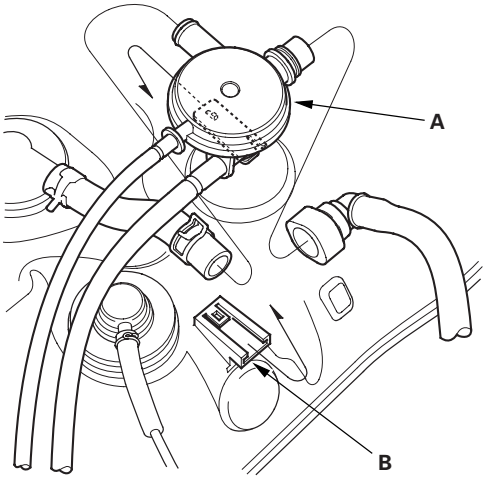

3. Install the fuel tank vapor control valve.

4. Install the fuel tank (see page 11-377).

EVAP Canister Replacement

2002-2004 models

1. Remove the hoses (A) and the EVAP canister vent shut valve 2P connector (B).

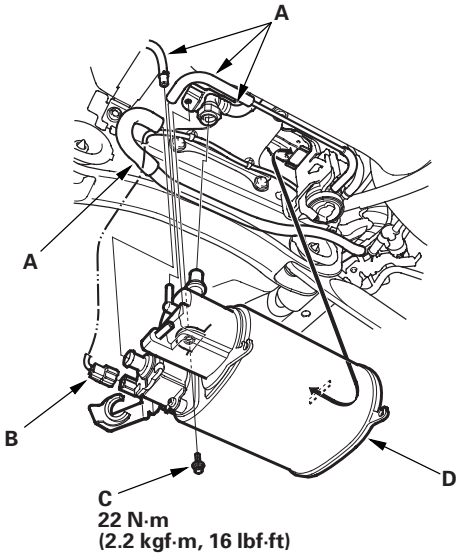

2. Remove the bolt (C).
3. Remove the EVAP canister assembly (D).
4. Install the canister in the reverse order of removal.

2005-2006 models

1. Remove the EVAP canister cover (A).

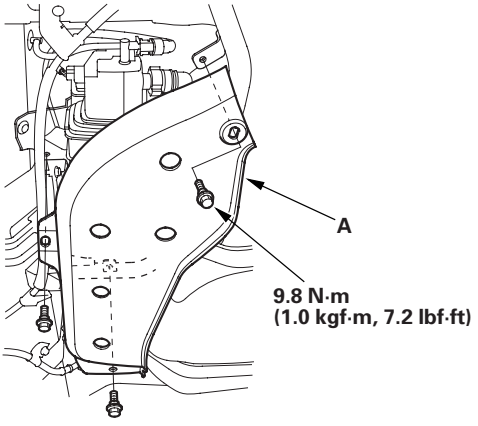

2. Remove the hoses (A), the FTP sensor 3P connector (B), the EVAP canister vent shut valve 2P connector (C) and the quick-connect fittings (D).

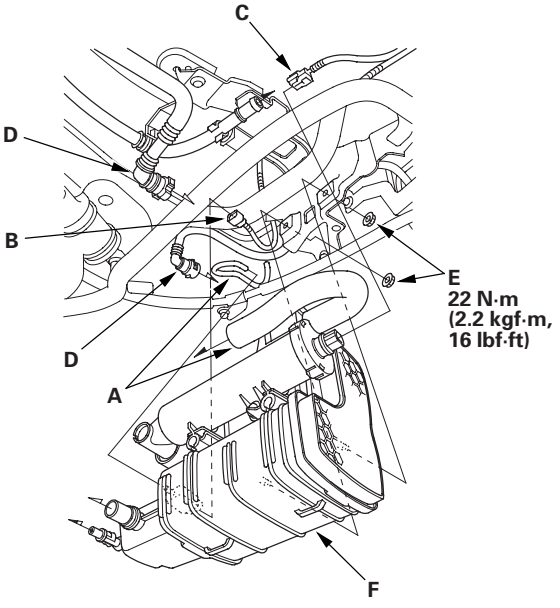

3. Remove the nuts (E).
4. Remove the EVAP canister assembly (F).
5. Install the canister in the reverse order of removal.

FTP Sensor Replacement

2002-2004 models

1. Remove the EVAP canister (see page 11-472).

2. Remove the clips, hoses, connectors and bolts, then remove FTP sensor assembly (A).

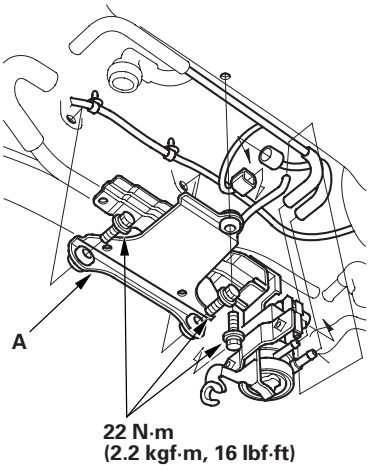

3. Remove the FTP sensor (A).

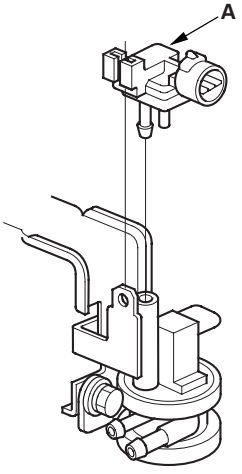

4. Install the sensor in the reverse order of removal.

2005-2006 models

1. Remove the EVAP canister (see page 11-472).

2. Remove the retaining clip (A).

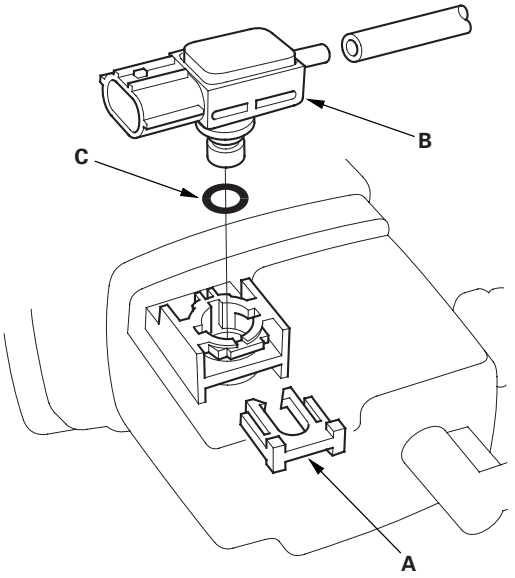

3. Remove the FTP sensor (B).

4. Install the sensor in the reverse order of removal with a new O-ring (C).

EVAP Canister Vent Shut Valve Replacement

2002-2004 models

1. Remove the EVAP canister (see page 11-472).

2. Remove the screw, and remove the EVAP canister vent shut valve (A).

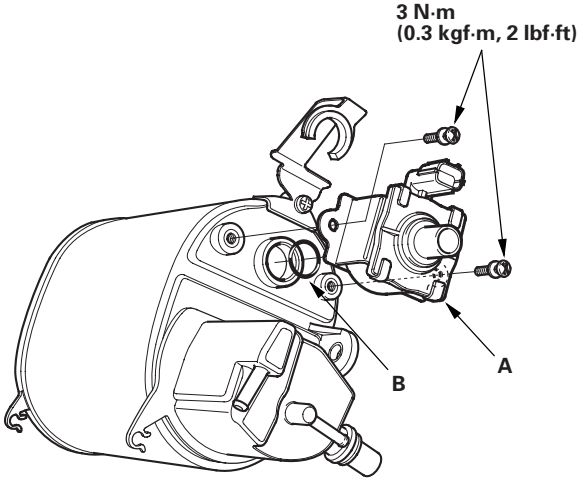

3. Installl the valve in the reverse order of removal with a new O-ring (B).

   NOTE: Do not coat the O-ring with oil, etc.

2005-2006 models

1. Remove the EVAP canister (see page 11-472).

2. Pry the lock tabs (A) outward and remove the EVAP canister vent shut valve (B).

   NOTE: Be careful not to damage the lock tabs.

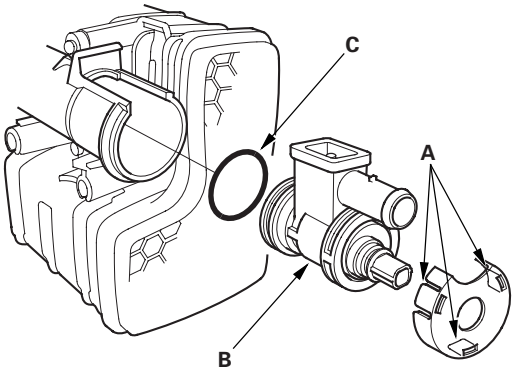

3. Installl the valve in the reverse order of removal with a new O-ring (C).

   NOTE: Do not coat the O-ring with oil, etc.

Transaxle

Clutch **12-1**

Manual Transmission **13-1**

Automatic Transmission **14-1**

Driveline/Axle **16-1**

Clutch

Special Tools 12-2
Component Location Index 12-3
System Description 12-4
Clutch Pedal, Clutch Pedal Position Switch, and
Clutch Interlock Switch Adjustment 12-6
Clutch Master Cylinder Replacement 12-7
Slave Cylinder Replacement 12-9
Clutch Replacement 12-12

Special Tools

Ref. No.	Tool Number	Description	Qty
①	07JAF-PM7011A	Clutch Alignment Disc	1
②	07LAB-PV00100 or 07924-PD20003	Ring Gear Holder	1
③	07ZAF-PR8A100	Clutch Alignment Shaft	1
④	07936-3710100	Remover Handle	1

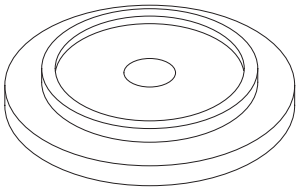

①

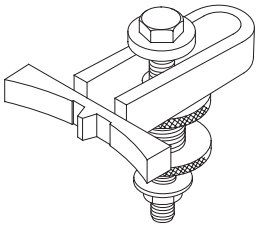

②

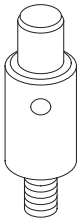

③

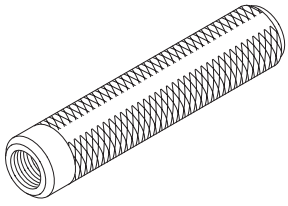

④

Component Location Index

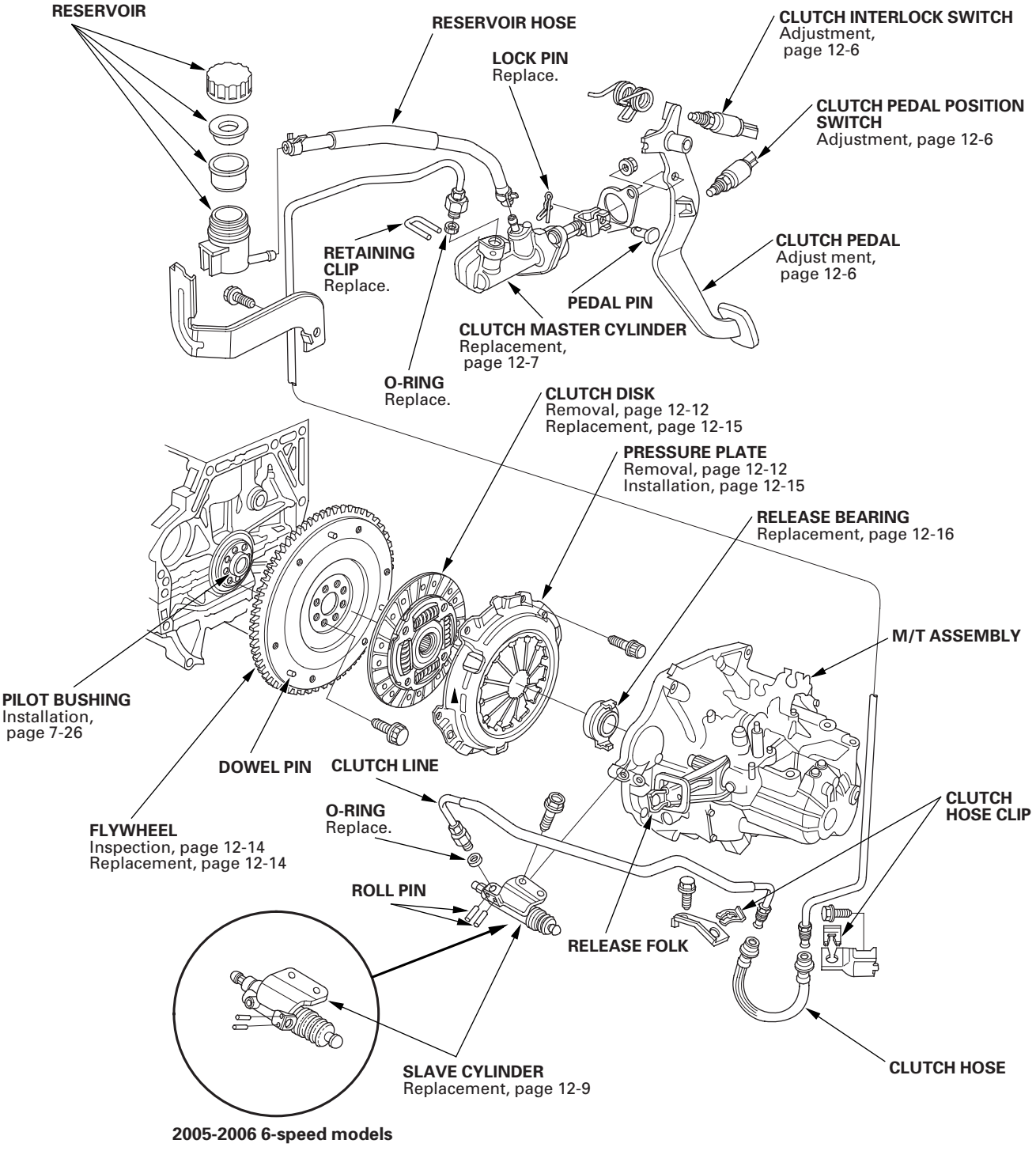

System Description

Delay Orifice Mechanism (2005-2006 6-speed models)

Function
The delay orifice mechanism improves clutch operation by delaying the slave cylinder release speed when the clutch pedal is suddenly released. The delay orifice mechanism is built into the slave cylinder.

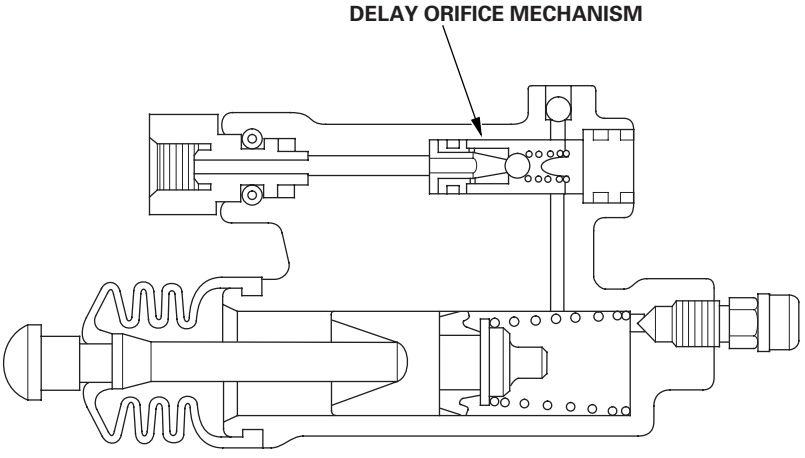

Operation
When the clutch pedal is pressed, the fluid pressure from the master cylinder moves the one-way valve in the direction shown in the illustration. The fluid flows through two passages: the orifice part and the filter part. It then flows out to the slave cylinder to release the pressure plate and clutch disc joint.

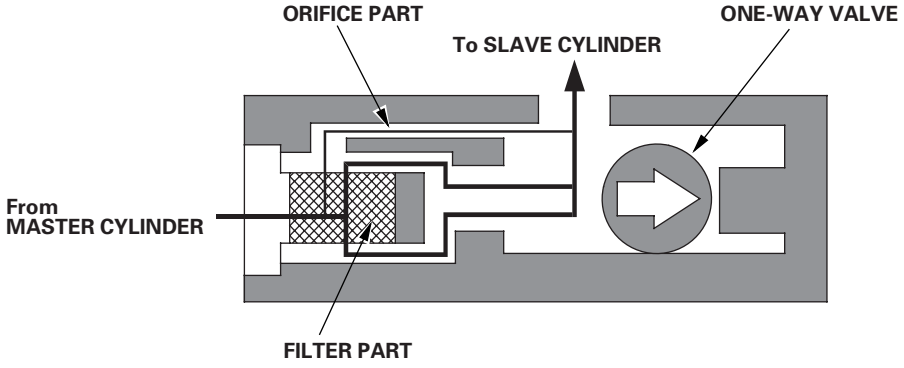

When the clutch pedal is released, the fluid pressure from the slave cylinder moves the one-way valve in the direction shown in the illustration. The one-way valve blocks the filter-part passage and delays the clutch release speed by returning the fluid to the master cylinder through only the orifice-part passage.

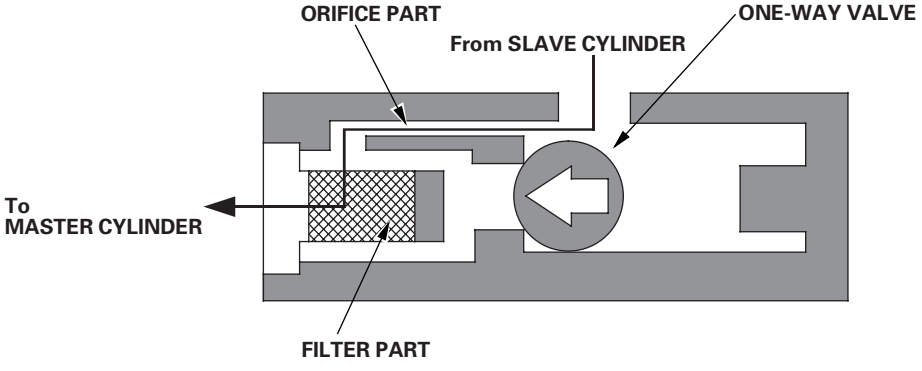

Clutch Pedal, Clutch Pedal Position Switch, and Clutch Interlock Switch Adjustment

NOTE:
- Check the clutch pedal position switch (see page 4-71).
- Check the clutch interlock switch (see page 4-8).
- Remove the driver's floor mat before adjusting the clutch pedal.
- The clutch is self-adjusting to compensate for wear.
- If there is no clearance between the master cylinder piston and pushrod, the release bearing will be held against the diaphragm spring, which can result in clutch slippage or other clutch problems.

1. Loosen the clutch pedal position switch locknut (A), and back off the clutch pedal position switch (B) (or adjusting bolt; without cruise control model) until it no longer touches the clutch pedal (C).

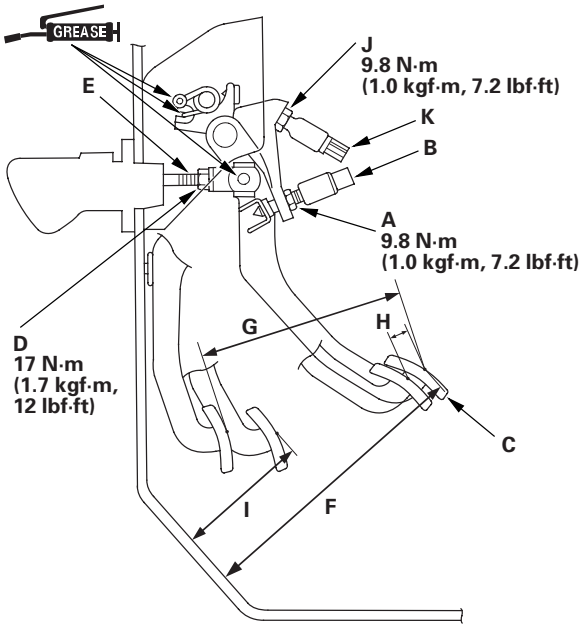

2. Loosen the clutch pushrod locknut (D), and turn the pushrod (E) in or out to get the specified height (F), stroke (G), free play (H) and disengement height (I) at the clutch pedal.

   Clutch Pedal Stroke:
   130—140 mm (5.12—5.51 in.)
   Clutch Pedal Free Play:
   10—16 mm (0.39—0.63 in.)
   Clutch Pedal Height:
   197 mm (7.76 in.)
   Clutch Pedal Disengement Height:
   115 mm (4.53 in.)

3. Tighten the clutch pushrod locknut.

4. With the clutch pedal released, turn in the clutch pedal position switch until it contacts the clutch pedal.

5. Turn in the clutch pedal position switch an additional 3/4 to 1 turn.

6. Tighten the clutch pedal position switch locknut.

7. Loosen the clutch interlock switch locknut (J) and the clutch interlock switch (K).

8. Press the clutch pedal to the floor.

9. Release the clutch pedal 10—16 mm (0.39—0.63 in.) from the fully pressed position, and hold it there. Adjust the position of the clutch interlock switch so the engine will start with the clutch pedal in this position.

10. Tighten the clutch interlock switch locknut.

Clutch Master Cylinder Replacement

NOTE:
- Use fender covers to a void damaging painted surfaces.
- Do not spill brake fluid on the vehicle; it may damage the paint; if brake fluid does contact the paint, wash it off immediately with water.

1. Remove the brake fluid from the clutch master cylinder reservoir with a syringe.

2. Pry out the lock pin (A), and pull the pedal pin (B) out of the yoke. Remove the master cylinder mounting nuts (C).

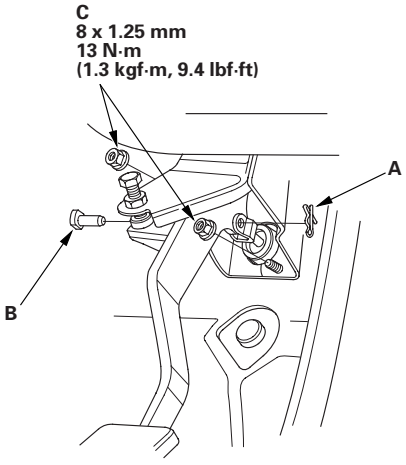

3. Remove the clutch master cylinder (A), and pull it toward the middle of the engine compartment. Remove the retaining clip (B). Disconnect the clutch line (C). Plug the end of the clutch line with a shop towel to prevent brake fluid from coming out.

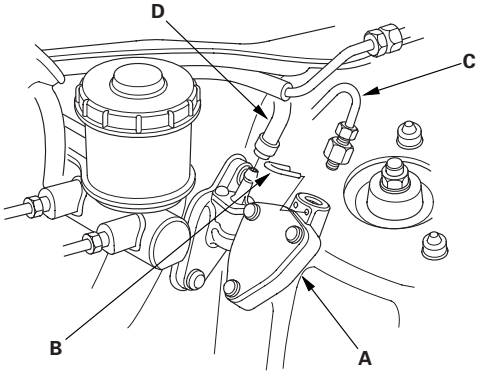

4. Disconnect reservoir hose (D) from the clutch master cylinder reservoir. Plug the end of the reservoir hose with a shop towel to prevent brake fluid from coming out.

5. Remove the clutch master cylinder (A).

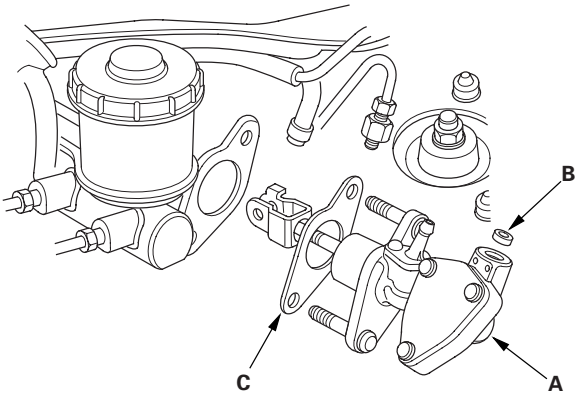

6. Remove the O-ring (B) and the clutch master cylinder seal (C) from the master cylinder.

7. Install the clutch master cylinder in the reverse order of removal. Install a new O-ring and new lock pin. Tighten the master cylinder mounting nuts to 13 N·m (1.3 kgf·m, 9.4 lbf·ft). Make sure the hose clamps (A) are positioned on the master cylinder (B) and reservoir (C) as shown.

   NOTE: When attaching the reservoir hose to the reservoir, make sure you align the yellow mark on the hose with the rib on the reservoir.

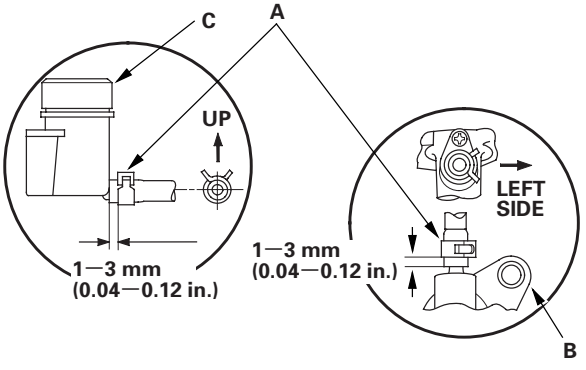

(cont'd)

Clutch Master Cylinder Replacement (cont'd)

8. To prevent the retaining clip (A) from coming off, pry apart the tip of the retaining clip (B) with a screwdriver.

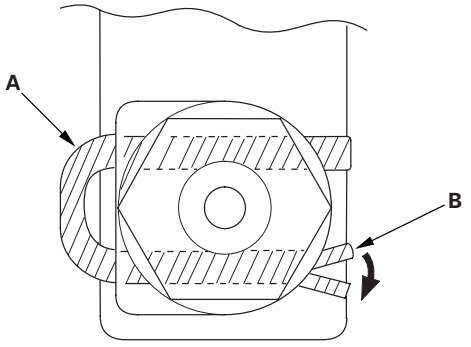

9. Bleed the clutch master hydraulic system (see step 11 on page 12-10).

   NOTE: Reservoir filling is covered in the bleeding procedure.

Slave Cylinder Replacement

NOTE:
- Use fender covers to avoid damaging painted surfaces.
- Do not spill brake fluid on the vehicle; it may damage the paint; if brake fluid does contact the paint, wash it off immediately with water.

1. Make sure you have the anti-theft codes for the radio, then write down the customers radio station presets. Disconnect the negative cable from the battery first, then disconnect the positive cable. Remove the battery.

2. Remove the battery base.

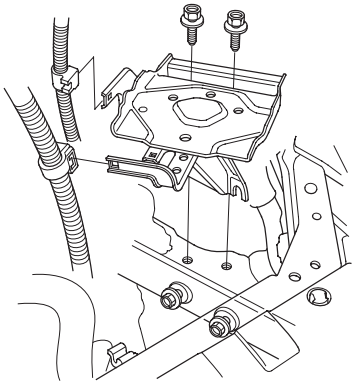

3. Remove the air cleaner housing (see step 7 on page 5-2).

4. Remove the intake air duct (see step 8 on page 5-2).

5. Remove the clutch line bracket (A).

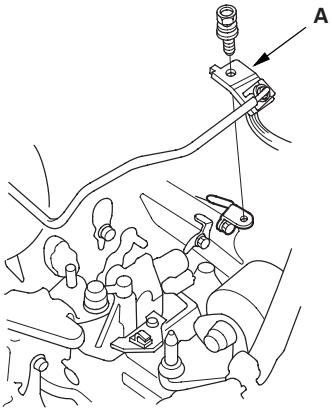

6. Remove the mounting bolts (A) and the slave cylinder (B).

Other models

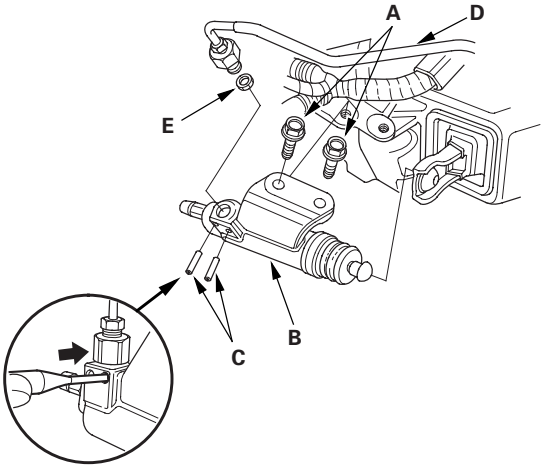

2005-2006 6-speed models

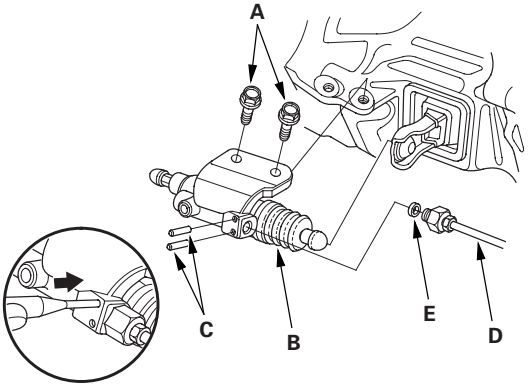

7. Remove the roll pins (C). Disconnect the clutch line (D), and remove the O-ring (E). Plug the end of the clutch line with a shop towel to prevent brake fluid from coming out.

(cont'd)

Slave Cylinder Replacement (cont'd)

8. Install the slave cylinder in the reverse order of removal. Install a new O-ring (A).

Other models

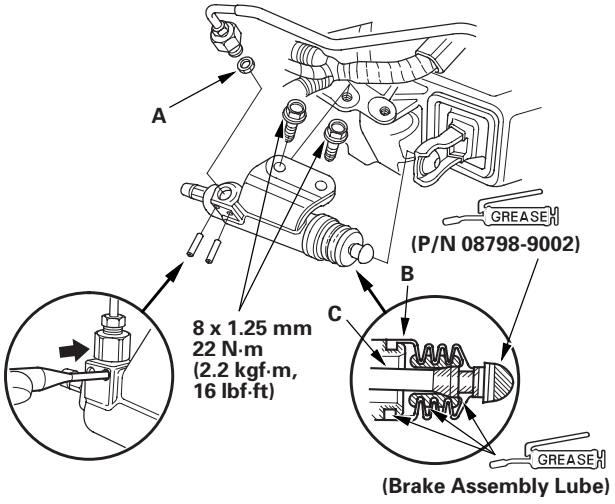

2005-2006 6-speed models

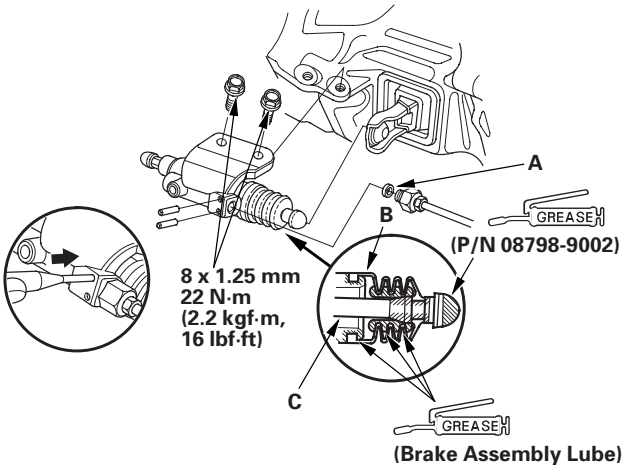

9. Pull back the boot (B), and apply brake assembly lube to the boot and slave cylinder rod (C). Reinstall the boot.

10. Apply super high temp urea grease (P/N 08798-9002) to the pushrod of the slave cylinder. Tighten the slave cylinder mounting bolts to 22 N· m (2.2 kgf·m, 16 lbf·ft).

11. Bleed the clutch hydraulic system.

- Attach a hose to the bleeder screw (A), and suspend the hose in a container of brake fluid.
- Make sure there is an adequate supply of fluid at the clutch master cylinder, then slowly pump the clutch pedal until no more bubbles appear at the bleeder hose.
- It may be necessary to limit the movement of the release fork (B) with a block of wood to remove all the air from system.
- Tighten the bleed screw to 8 N·m (0.8 kgf·m, 6 lbf·ft); do not overtighten it.
- Refill the clutch master cylinder with fluid when done.
- Always use only ACURA DOT 3 Brake Fluid.

Other models

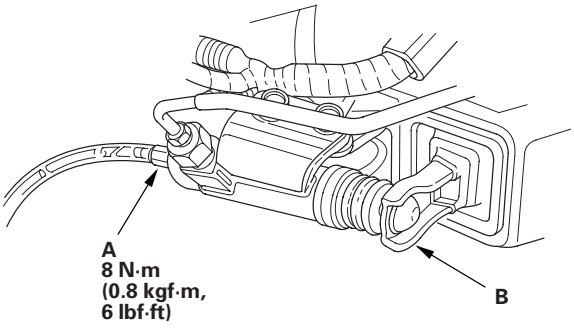

2005-2006 6-speed models

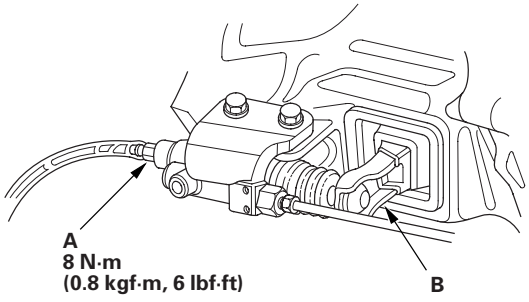

12. Install the clutch line bracket (A).

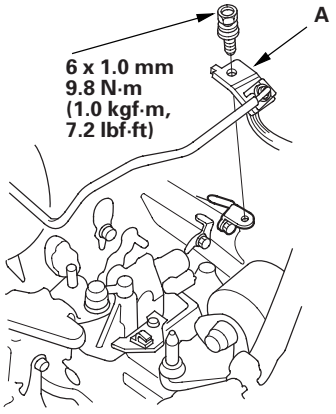

13. Install the intake air duct (see step 42 on page 5-19).

14. Install the air cleaner housing (see step 43 on page 5-19).

15. Install the battery base.

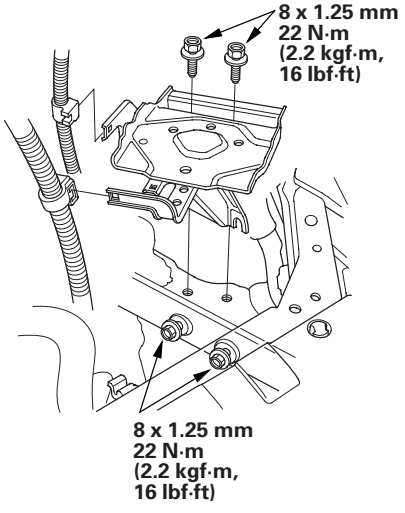

16. Install the battery. Clean the battery posts and cable terminals with sandpaper, then assemble them and apply grease to prevent corrosion. Connect the positive cable to the battery first, then connect the negative cable.

17. Enter the audio anti-theft codes, then enter the customer's audio station presets, and set the clock.

18. 2002-2004 models: Do the ECM idle learn procedure (see page 11-349).

19. Do the power window control unit reset procedure (see page 22-148).

Clutch Replacement

Special Tools Required
- Clutch alignment shaft 07ZAF-PR8A100
- Clutch alignment disc 07JAF-PM7011A
- Remover handle 07936-3710100
- Ring gear holder 07LAB-PV00100 or 07924-PD20003

Pressure Plate and Clutch Disc Removal

1. Check the height of the diaphragm spring fingers using the special tools and a feeler gauge. If the height is more than the service limit, replace the pressure plate.

   Standard (New): 0.6 mm (0.02 in.) max.
   Service Limit: 0.8 mm (0.03 in.)

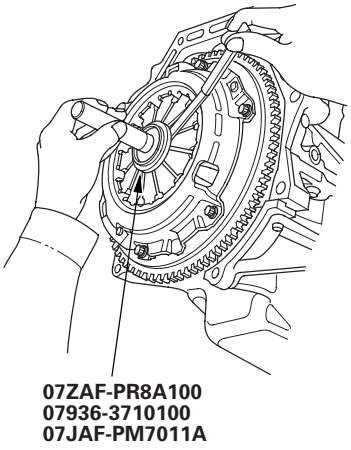

2. Install the special tools.

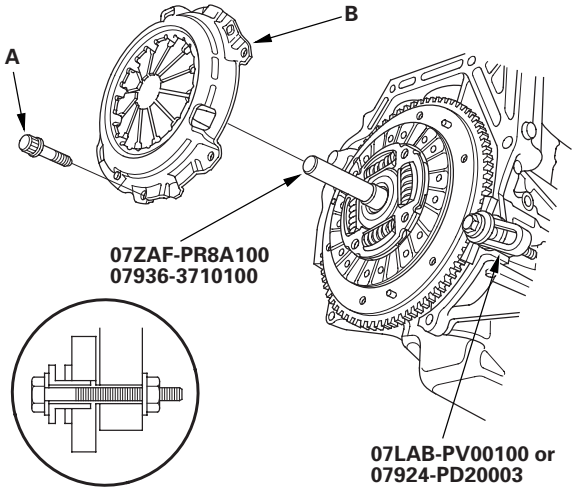

3. To prevent warping, unscrew the pressure plate mounting bolts (A) in a crisscross pattern in several steps, then remove the pressure plate (B).

4. Inspect the fingers of the diaphragm spring (A) for wear at the release bearing contact area.

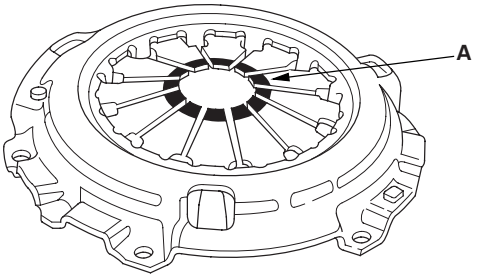

5. Inspect the surface of the pressure plate (A) for wear, cracks, and burning.

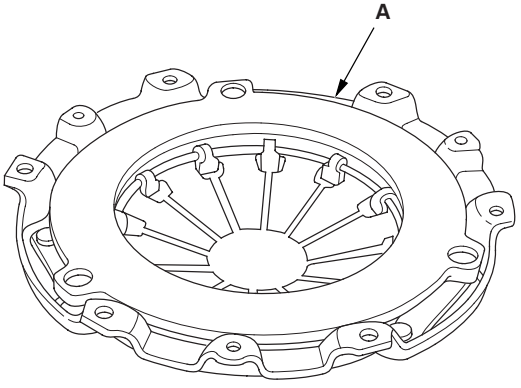

6. Inspect for warpage using a straight edge (A) and a feeler gauge (B). Measure across the pressure plate (C). If the warpage is more than the service limit, replace the pressure plate.

Standard (New): 0.03 mm (0.001 in.) max.
Service Limit: 0.15 mm (0.006 in.)

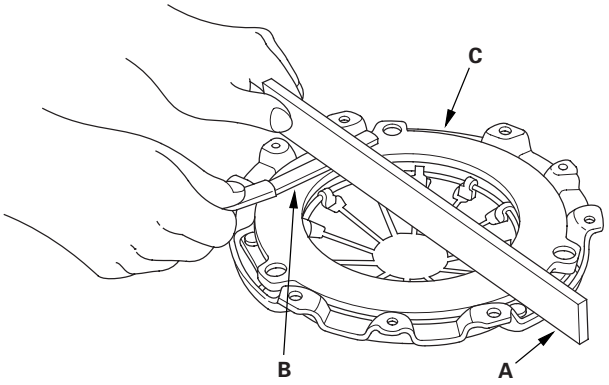

7. Remove the clutch disc and special tools.

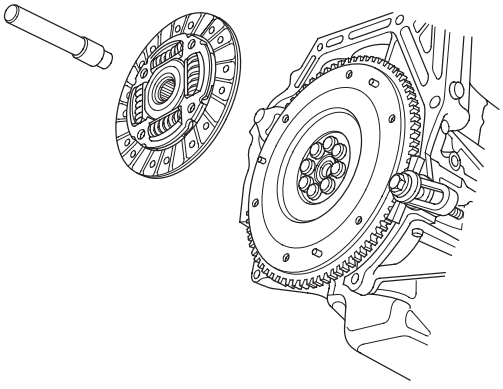

8. Inspect the lining of the clutch disc for signs of slippage or oil. If the clutch looks burnt or is oil soaked, replace it. Find and repair the source of the oil leak if the clutch disc is soaked.

9. Measure the clutch disc thickness. If the thickness is less than the service limit, replace the clutch disc.

Standard (New): 8.3—8.9 mm (0.33—0.35 in.) max.
Service Limit: 6.0 mm (0.24 in.)

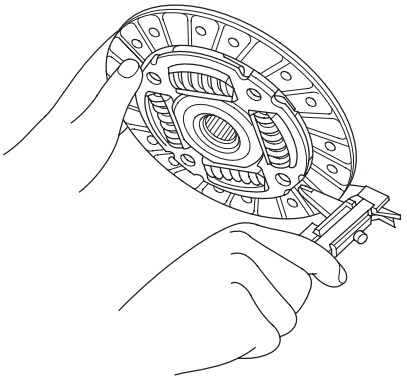

10. Measure the rivet depth from the clutch disc lining surface (A) to the rivets (B) on both sides. If the rivet depth is less than the service limit, replace the clutch disc.

Standard (New): 1.65—2.25 mm (0.065—0.089 in.) max.
Service Limit: 0.7 mm (0.03 in.)

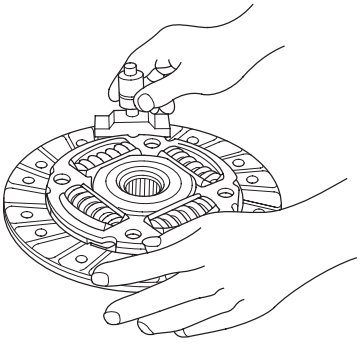

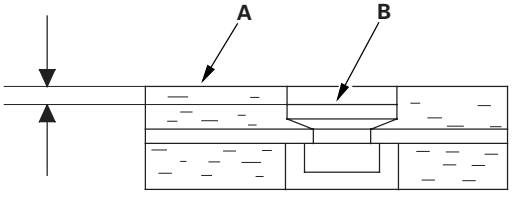

(cont'd)

Clutch Replacement (cont'd)

Flywheel Inspection

1. Inspect the ring gear teeth for wear and damage.

2. Inspect the clutch disc mating surface on the flywheel for wear, cracks, and burning.

3. Measure the flywheel (A) runout using a dial indicator (B) through at least two full turns with the engine installed. Push against the flywheel each time you turn it to take up the crankshaft thrust washer clearance. If the runout is more than the service limit, replace the flywheel, and recheck the runout. Resurfacing the flywheel is not recommended.

   Standard (New): 0.05 mm (0.002 in.) max.
   Service Limit: 0.15 mm (0.006 in.)

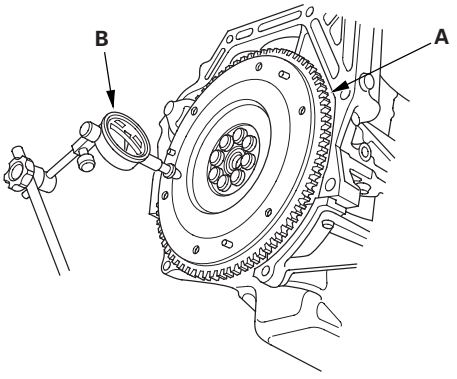

Flywheel Replacement

1. Install the special tool.

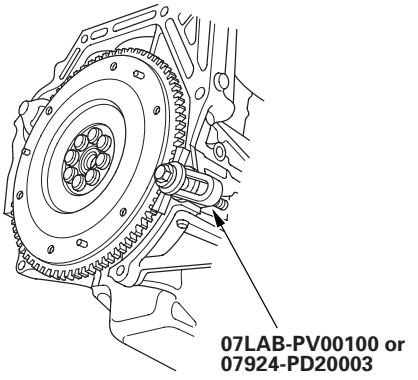

2. Remove the flywheel mounting bolts in a crisscross pattern in several steps, then remove the flywheel.

3. Install the flywheel on the crankshaft, and install the mounting bolts, finger-tight.

4. Install the special tool, then torque the flywheel mounting bolts in a crisscross pattern in several steps.

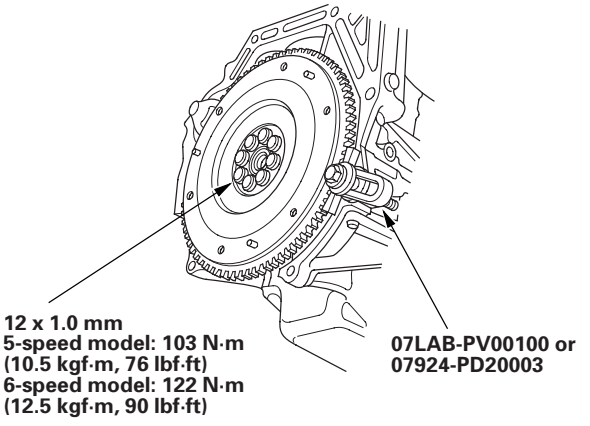

Clutch Disc and Pressure Plate Installation

1. Temporarily install the clutch disc onto the splines of the transmission mainshaft. Make sure the clutch disc slides freely on the mainshaft.

2. Install the ring gear holder.

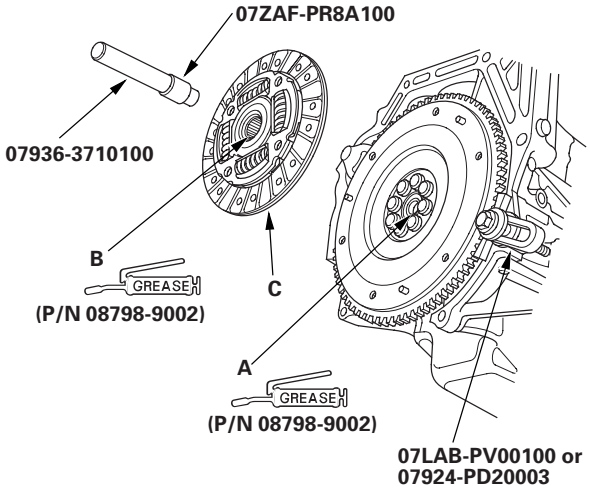

3. Apply a light coat of super high temp urea grease (P/N 08798-9002) to the crankshaft pilot bushing (A).

4. Apply super high temp urea grease (P/N 08798-9002) to the splines (B) of the clutch disc (C), then install the clutch disc using the special tools.

5. Install the pressure plate (A) and the mounting bolts (B), finger-tight.

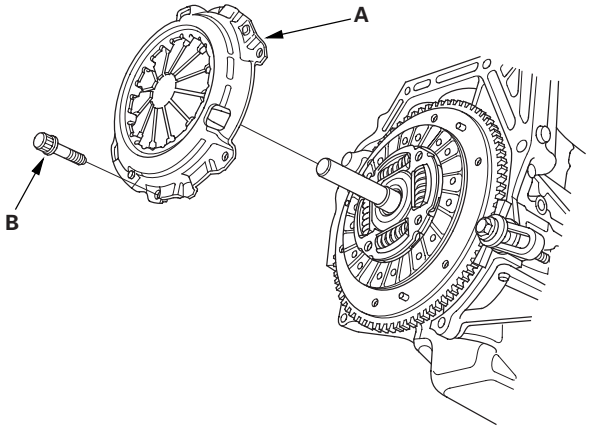

6. Torque the mounting bolts in a crisscross pattern. Tighten the bolts in several steps to prevent warping the diaphragm spring.

   Pressure Plate Mounting Bolt Torque:
   25 N·m (2.6 kgf·m, 19 lbf·ft)

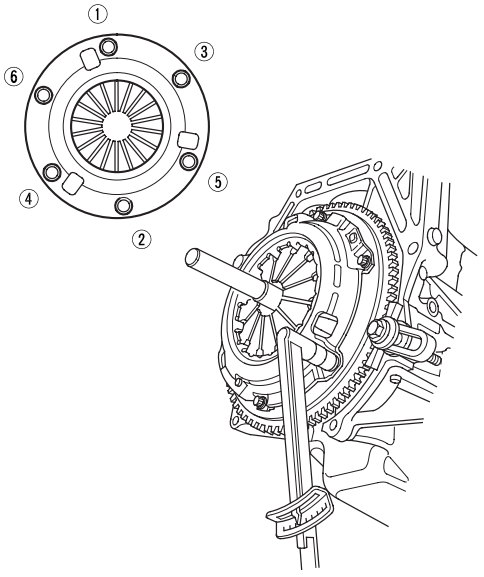

7. Remove the special tools.

8. Make sure the diaphragm spring fingers are all the same height.

(cont'd)

Clutch Replacement (cont'd)

Release Bearing Replacement

1. Remove the release fork boot (A) from the clutch housing (B).

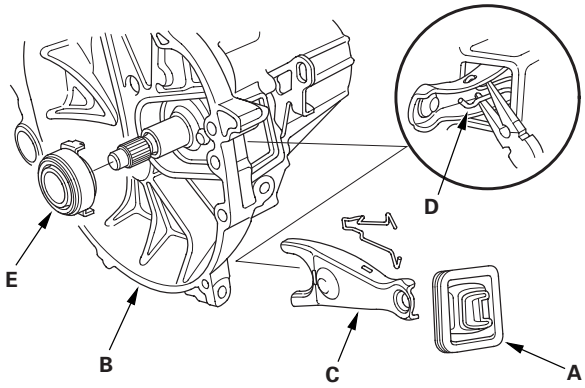

2. Remove the release fork (C) from the clutch housing by squeezing the release fork set spring (D) with pliers. Remove the release bearing (E).

3. Check the play of the release bearing by spinning it with your hand. If there is excessive play, replace the release bearing.

   NOTE: The release bearing is packed with grease. Do not wash it in solvent.

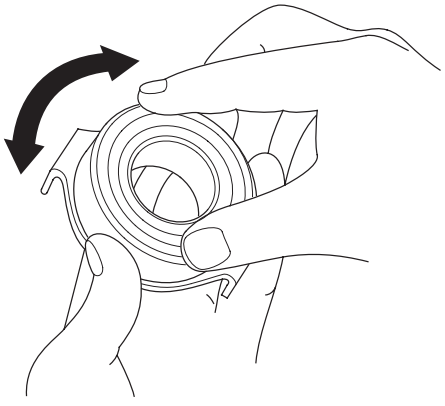

4. Apply super high temp urea grease (P/N 08798-9002) to the release fork (A), the release fork bolt (B), the release bearing (C), and the release bearing guide (D) in the shaded areas.

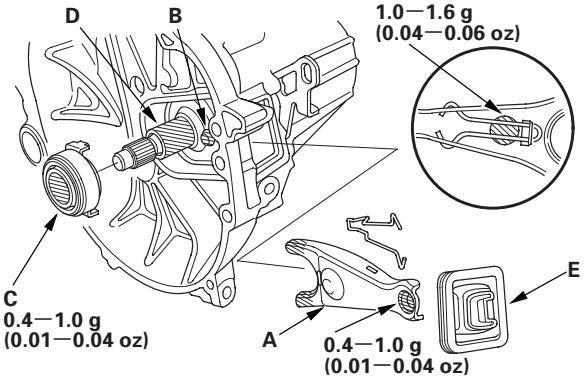

5. With the release fork slid between the release bearing pawls, install the release bearing on the mainshaft while inserting the release fork through the hole in the clutch housing.

6. Align the detent of the release fork with the release fork bolt, then press the release fork over the release fork bolt squarely.

7. Install the release fork boot (E). Make sure the boot seals around the release fork and clutch housing.

8. Move the release fork (A) right and left to make sure that it fits properly against the release bearing (B), and the release bearing slides smoothly.

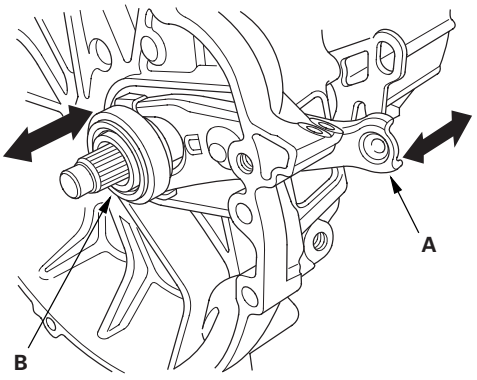

Manual Transmission

Special Tools 13-2
General Troubleshooting Information 13-3
Transmission Fluid Inspection and Replacement 13-4
Back-up Light Switch Test 13-4
Transmission Removal 13-5
Transmission Installation 13-12
Transmission Disassembly 13-19
Reverse Shift Fork Clearance Inspection 13-30
Change Lever Clearance Inspection 13-31
Change Lever Assembly Disassembly/Reassembly 13-32
Shift Fork Clearance Inspection 13-34
Shift Fork Disassembly/Reassembly 13-35
Mainshaft Assembly Clearance Inspection 13-37
Mainshaft Disassembly 13-42
Mainshaft Inspection 13-43
Mainshaft Reassembly 13-44
Countershaft Assembly Clearance Inspection 13-52
Countershaft Disassembly 13-54
Countershaft Inspection 13-55
Countershaft Reassembly 13-56
Synchro Sleeve and Hub Inspection and Reassembly 13-62
Synchro Ring and Gear Inspection 13-63
Mainshaft Bearing and Oil Seal Replacement 13-64
Countershaft Bearing Replacement 13-65
Mainshaft Thrust Clearance Adjustment 13-66
Transmission Reassembly 13-69
Gearshift Mechanism Replacement 13-74

Reverse Lockout System

Component Location Index 13-75
System Description 13-76
Circuit Diagram 13-77
Circuit Troubleshooting 13-78
Reverse Lockout Solenoid Test 13-80
Reverse Lockout Solenoid Disassembly/Reassembly 13-80

M/T Differential

Component Location Index 13-82
Backlash Inspection 13-84
Differential Carrier, Final Driven Gear Replacement 13-84
Carrier Bearing Replacement 13-85
Oil Seal Replacement 13-86
Differential Thrust Clearance Adjustment 13-87

Special Tools

Ref. No.	Tool Number	Description	Qty
*①	07GAJ-PG20110	Mainshaft Holder	1
*②	07GAJ-PG20130	Mainshaft Base	1
③	07JAD-PL90100	Oil Seal Driver	1
④	07NAD-P20A100	Oil Seal Driver Attachment	1
⑤	07SAZ-001000A	Backprobe Set	2
**⑥	07736-A01000B	Adjustable Bearing Puller, 20—40 mm	1
⑦	07746-0010300	Driver Attachment, 42 x 47 mm	1
⑧	07746-0030100	Driver, 40 mm I.D.	1
⑨	07746-0030300	Driver Attachment, 30 mm I.D.	1
⑩	07749-0010000	Driver	1

* Part of Mainshaft Inspection Tool Set, 07GAJ-PG20102.
** Must be used with commercially available 3/8''-16 Slide Hammer.

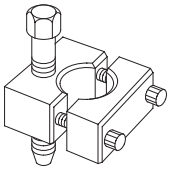
①

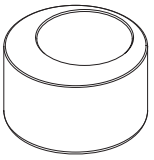
②

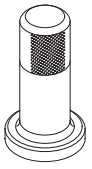
③

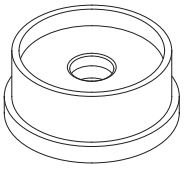
④

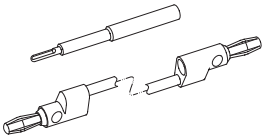
⑤

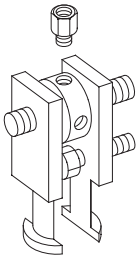
⑥

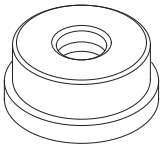
⑦

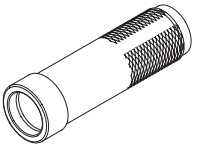
⑧

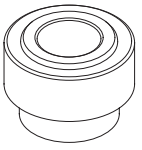
⑨

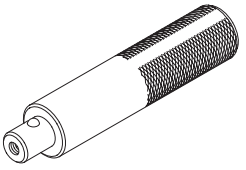
⑩

General Troubleshooting Information

How to Troubleshoot Circuits at the ECM

Special Tools Required
Backprobe set 07SAZ-001000A (2 required)

1. Remove the passenger's dashboard lower cover (see page 20-67).

2. Connect the backprobe adapters (A) to the stacking patch cords (B), and connect the cords to a digital multimeter (C).

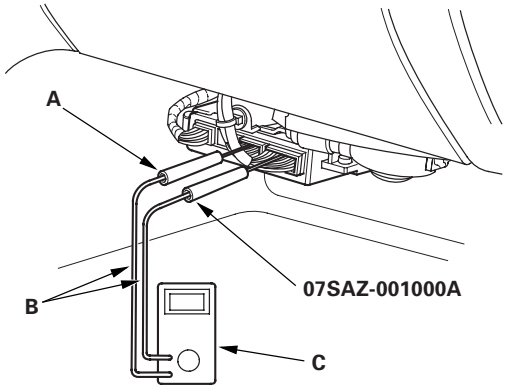

3. Using the wire insulation as a guide for the contoured tip of the backprobe adapter, gently slide the tip into the connector from the wire side until it touches the end of the wire terminal.

Transmission Fluid Inspection and Replacement

1. Park the vehicle on level ground, and turn the ignition switch to LOCK (0).

2. Remove the oil filler plug (A) and filler plug washer (B), check the condition of the fluid, and make sure it is at the proper level (C).

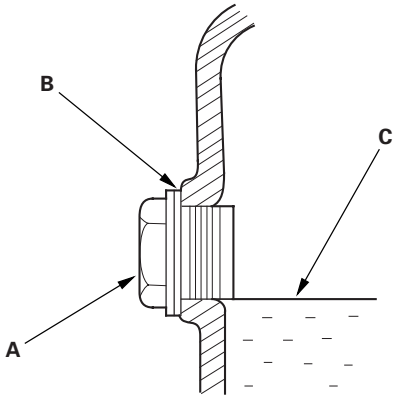

3. If the fluid is dirty, remove the drain plug (D) and drain it.

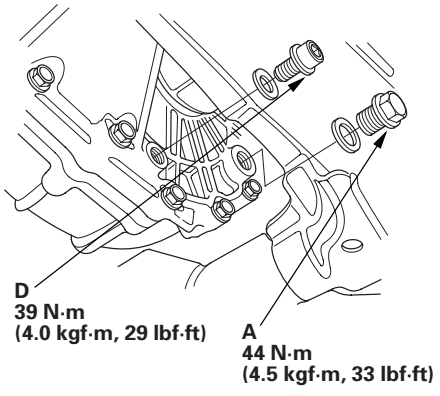

4. Install the drain plug with a new drain plug washer, and refill the transmission fluid to the proper level.

   Fluid Capacity
   1.5 L (1.6 US qt) at fluid change
   1.7 L (1.8 US qt) at overhaul

   Always use ACURA Manual Transmission Fluid (MTF). Using engine oil can cause stiffer shifting because it does not contain the proper additives.

5. Reinstall the oil filler plug with a new filler plug washer.

Back-up Light Switch Test

1. Disconnect the back-up light switch connector.

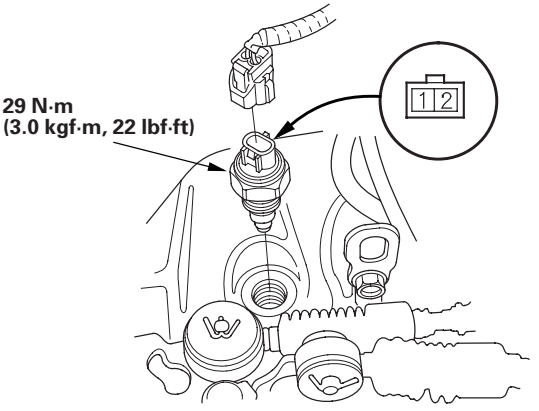

2. Check for continuity between the No. 1 and No. 2 terminals of the back-up light switch 2P connector. There should be continuity when the shift lever is in reverse.

3. If necessary, replace the back-up light switch. Apply liquid gasket (P/N 08718-0001 or 08718-0002) to threads of the switch, and install the switch on the transmission housing.

   NOTE: Do not install the back-up light switch if too much time has passed after applying the liquid gasket (for P/N 08718-0002, no more than 4 minutes, for all others, no more than 5 minutes). Instead, remove the old residue and reapply the riquid gusket.

Transmission Removal

Special Tools Required
- Engine hanger adapter EQS00BRSX0 *
- Engine support hanger, A & Reds AAR-T-12566 *
- Subframe adapter EQS02C000011 *

* Available through the Honda Tool Equipment Program 1-888-424-6857.

NOTE: Use fender covers to avoid damaging painted surfaces.

1. Make sure you have the anti-theft code for the radio, then write down the customers radio station presets. Disconnect the negative cable from the battery first, then disconnect the positive cable from the battery. Remove the battery.

2. Remove the intake manifold cover (see step 6 on page 5-2).

3. Remove the air cleaner housing (see step 7 on page 5-2).

4. Remove the intake air duct (see step 8 on page 5-2).

5. Remove the battery base (A).

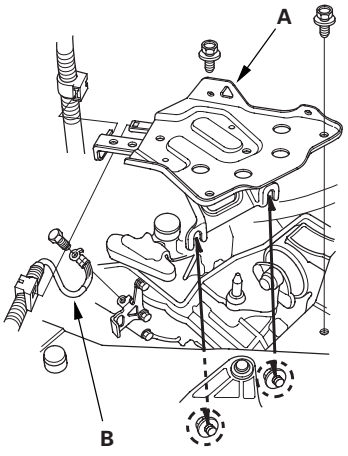

6. Disconnect the transmission ground cable (B).

7. Disconnect the back-up light switch connector (A), the vehicle speed sensor (VSS) connector (B), the reverse lockout solenoid connector (6-speed model) (C), and the output shaft (countershaft) speed sensor connector (D).

2002-2004 models:

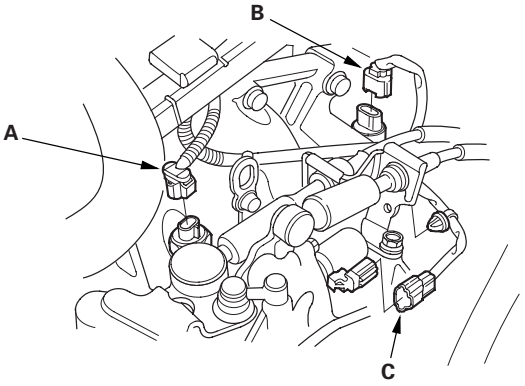

2005-2006 models:

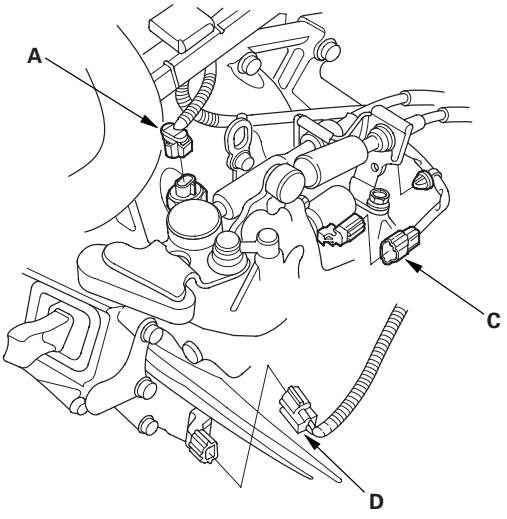

(cont'd)

Transmission Removal (cont'd)

8. Remove the cable bracket (A), then disconnect the cables (B) from the top of the transmission housing. Carefully remove both cables and the bracket together to avoid bending the cables.

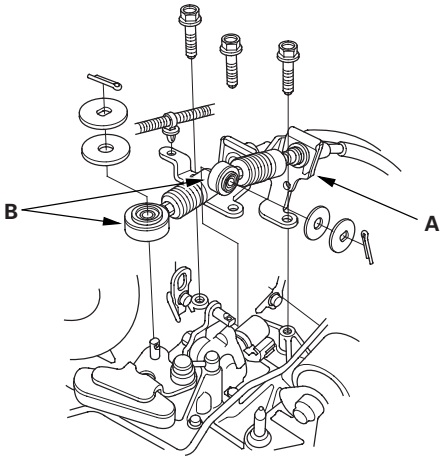

9. Remove the harness clips.

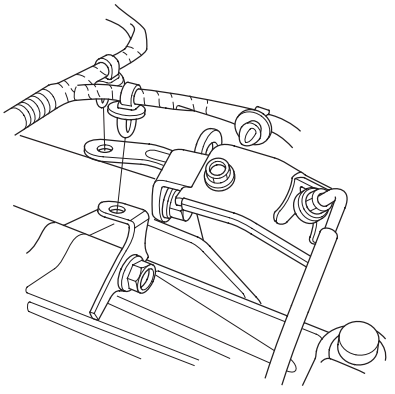

10. Carefully remove the slave cylinder without bending the clutch line. Do not press the clutch pedal once the slave cylinder has been removed.

Other models:

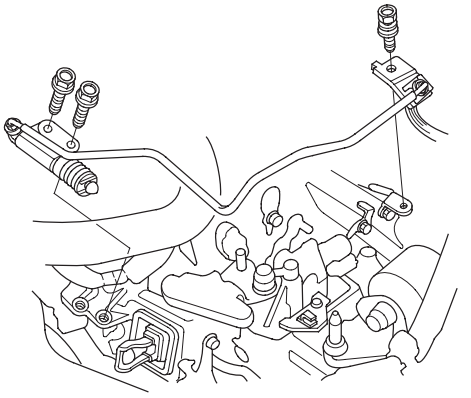

2005-2006 model 6-speed models:

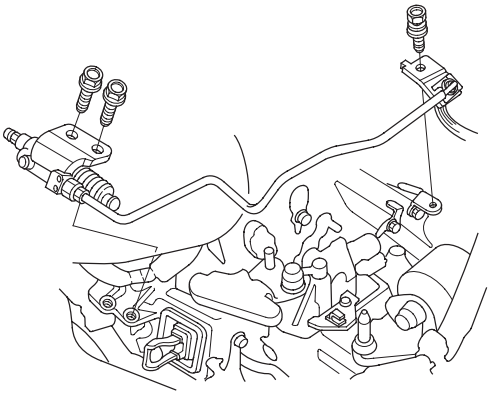

11. Remove the engine wire harness cover (A) by lifting up on the lock tab (B), then slide the harness forward off the air cleaner housing mounting bracket (C).

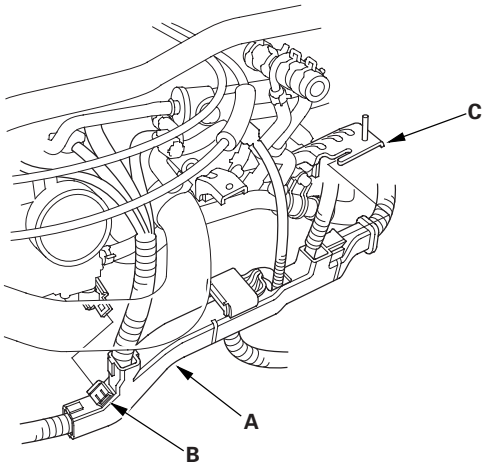

12. Remove the water pipe mounting bolt (A), and lower the water pipe slighty. Loosen the air cleaner housing bracket mounting bolt (B), and remove the mounting bolt (C).

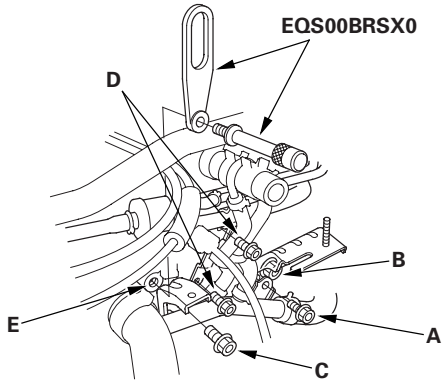

13. Remove the brake booster and evaporative emission (EVAP) line bracket mounting bolts (D), and attach the special tool to the threaded hole (E) in the cylinder head.

14. Install the engine support hanger (A) to the vehicle, and attach the hook to the special tool.

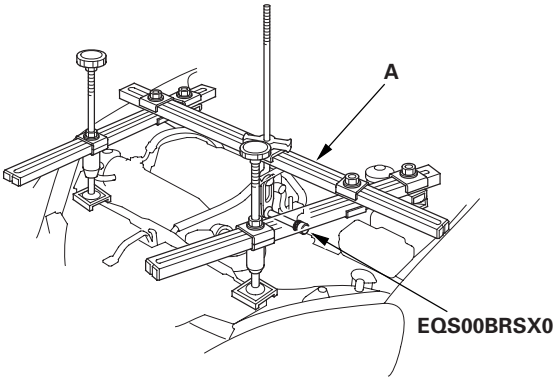

15. Remove the two transmission upper mounting bolts.

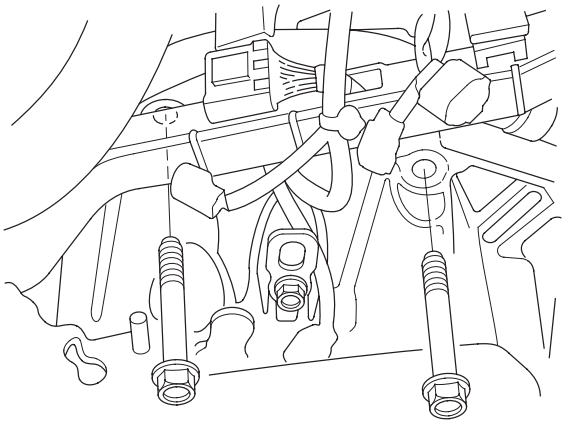

(cont'd)

Transmission Removal (cont'd)

16. Remove the transmission mount bracket (A) and the transmission mounting bolt (B).

2002 model:

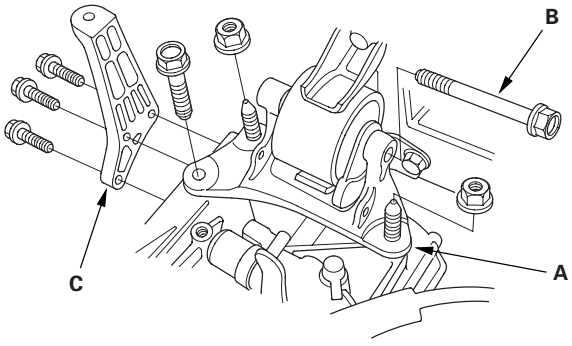

2003-2006 models:

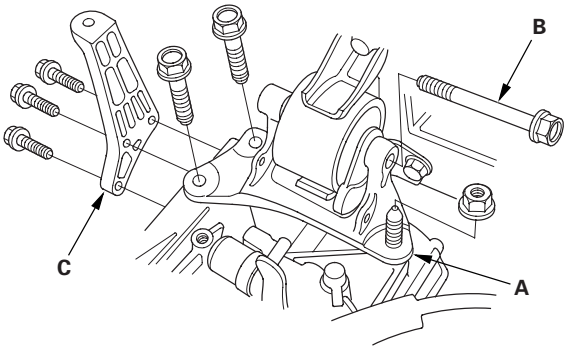

17. Remove the air cleaner bracket (C).

18. Raise the vehicle, and make sure it is securely supported.

19. Drain the transmission fluid. Reinstall the drain plug using a new drain plug washer (see page 13-4).

20. Remove the splash shield.

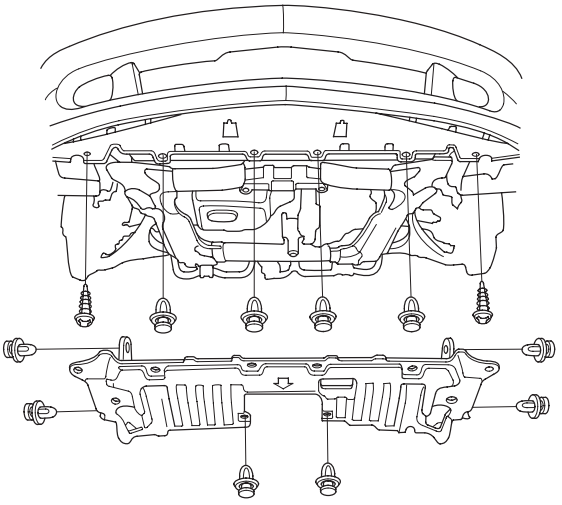

21. Remove the three way catalytic converter (TWC) assembly (see step 29 on page 5-6).

22. Remove the driveshafts (see page 16-4).

23. Remove the intermediate shaft (see page 16-19).

24. Remove the front engine mount bracket mounting bolt.

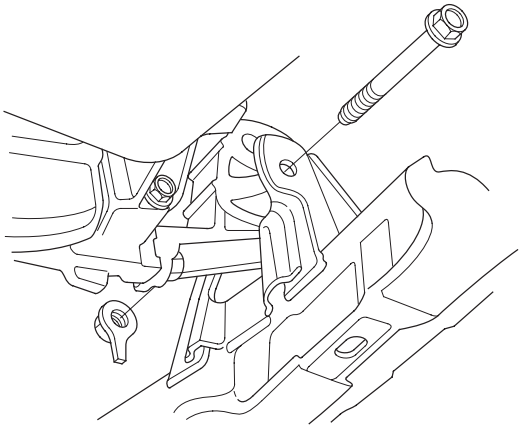

25. Remove the three bolts securing the transmission rear mount.

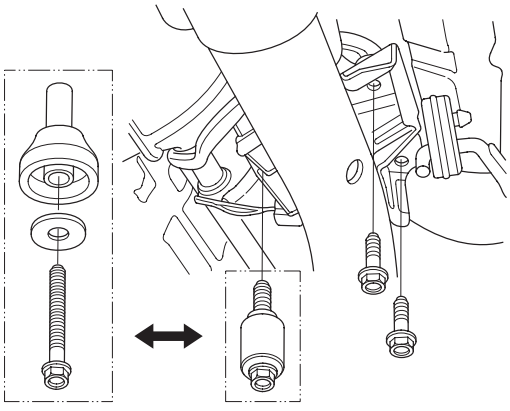

2005-2006 6-speed models **Other models**

26. Support the front suspension subframe with the subframe adapter and a jack.

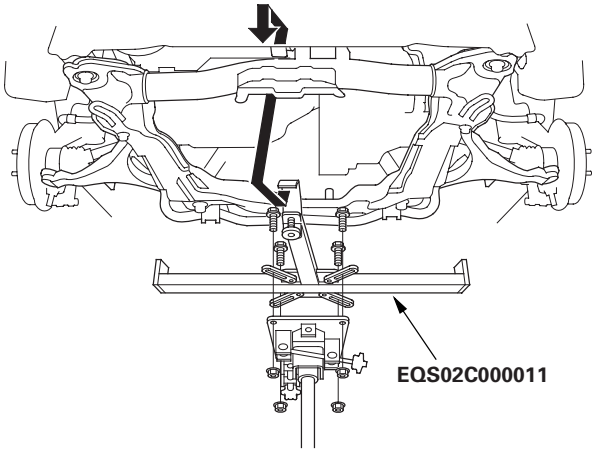

27. Make reference marks (A) on the front suspension subframe (B) and mounting bolts (C), then remove the front suspension subframe.

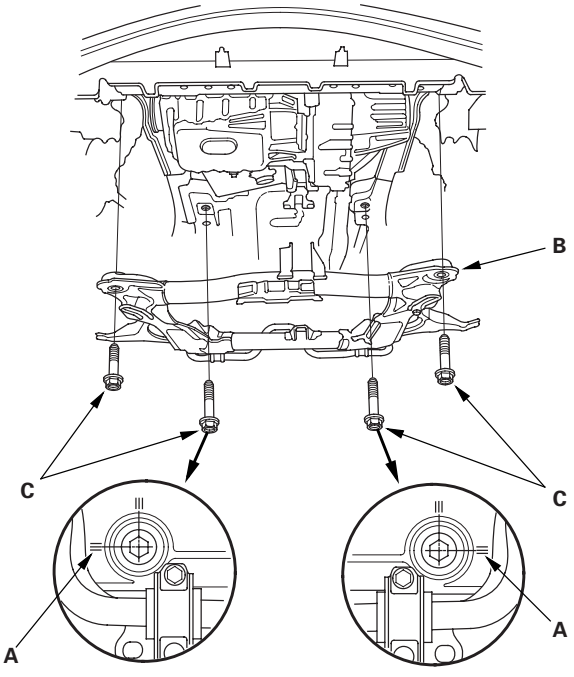

(cont'd)

Transmission Removal (cont'd)

28. Remove the clutch cover.

5-speed model:

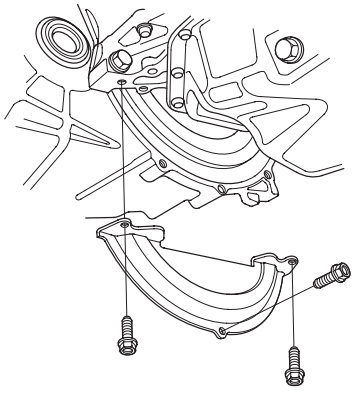

6-speed model:

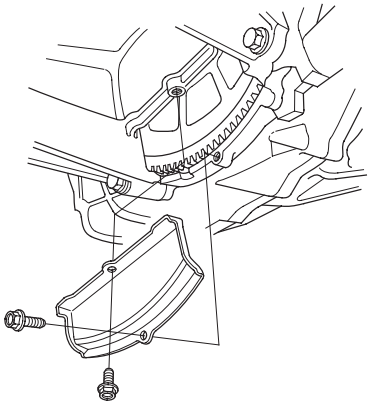

29. Remove the front engine mount.

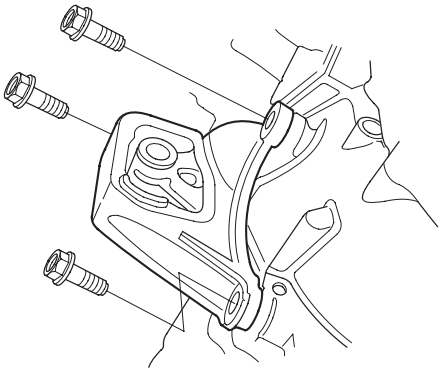

30. Place the transmission jack under the transmission, and remove the transmission mounting bolts.

5-speed model: Four lower bolts

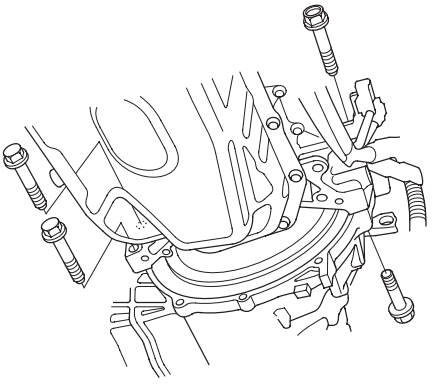

6-speed model: Two rear and two lower bolts

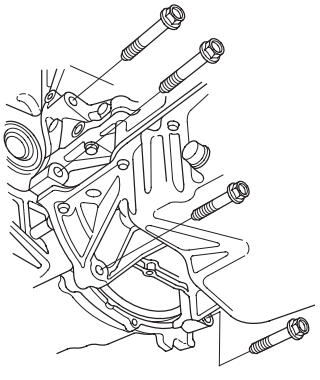

31. 6-speed model: Remove the harness bracket (A), then remove the intake manifold bracket (B).

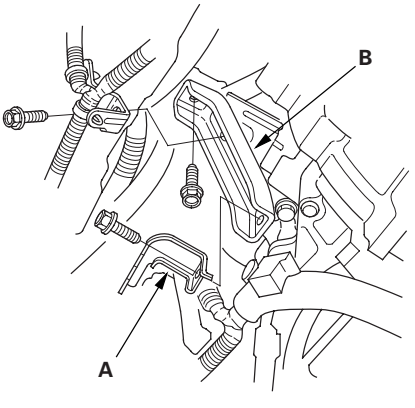

32. 6-speed model: Remove the two front transmission mounting bolts.

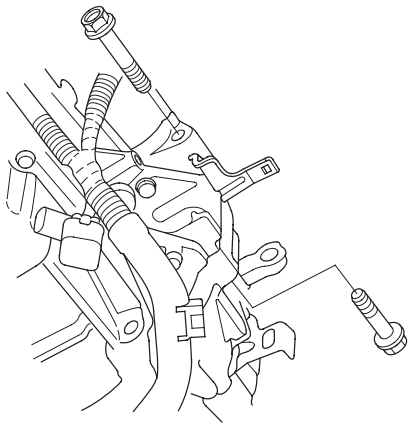

33. Pull the transmission away from the engine until the transmission mainshaft clears the clutch pressure plate, then lower the transmission on the transmission jack.

34. Remove the transmission rear mount (A) and the transmission rear mount bracket (B).

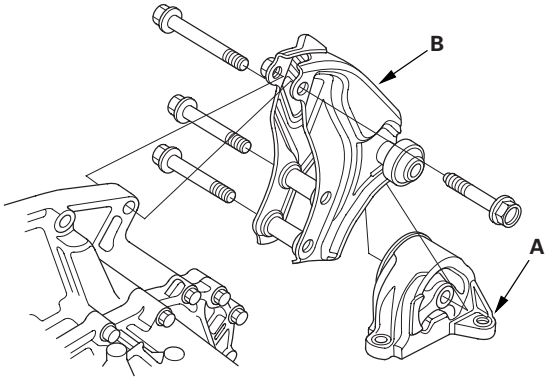

35. Remove the release fork boot (A) from the clutch housing (B).

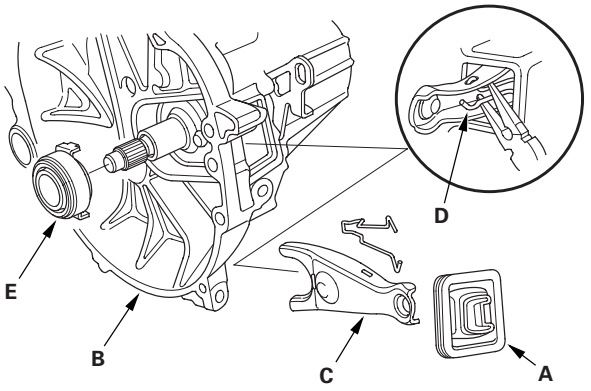

36. Remove the release fork (C) from the clutch housing by squeezing the release fork set spring (D) with pliers. Remove the release bearing (E).

Transmission Installation

Special Tools Required
- Engine hanger adapter EQS00BRSX0 *
- Engine support hanger, A & Reds AAR-T-12566 *
- Subframe adapter EQS02C000011 *

* Available through the Honda Tool and Equipment Program 1-888-424-6857.

1. Make sure the two dowel pins are installed in the clutch housing.

2. Apply super high temp urea grease (P/N 08798-9002) to the release fork (A) and the release bearing (B). Install the release fork, the release bearing, and the boot (C).

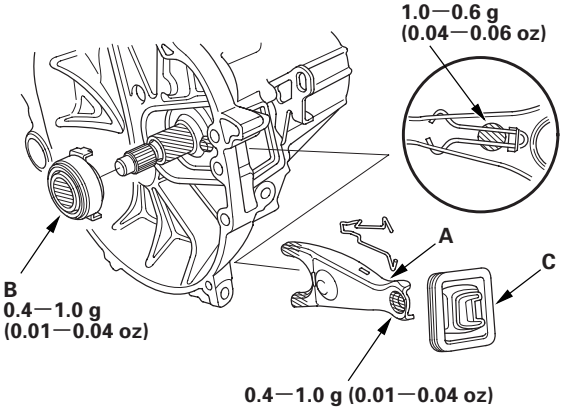

3. Install the transmission rear mount bracket (A) and the transmission rear mount (B).

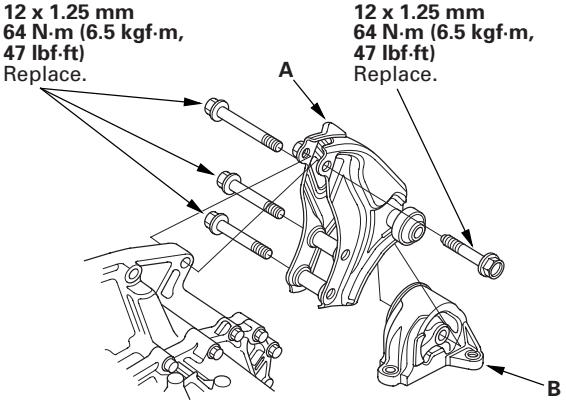

4. Place the transmission on the transmission jack, and raise it to the engine level.

5. 6-speed model: Install the two front transmission mounting bolts.

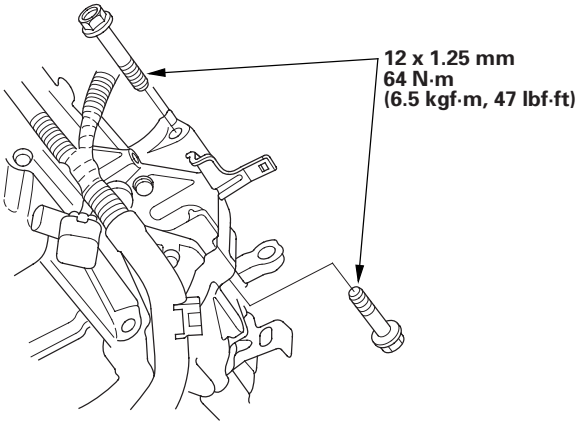

6. 6-speed model: Install the intake manifold bracket (A), then install the harness bracket (B).

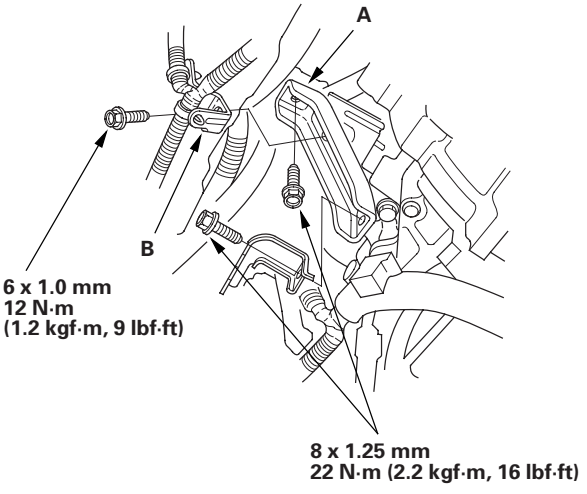

7. Install the transmission mounting bolts.

5-speed model: Four lower bolts

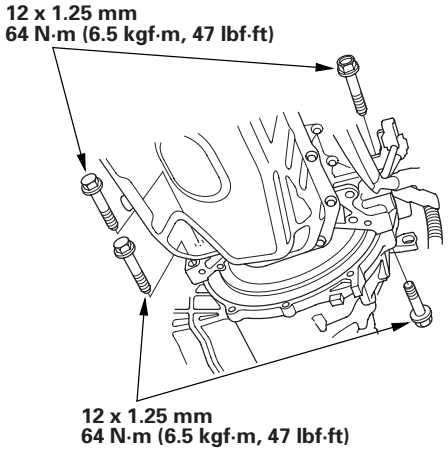

6-speed model: Two rear and two lower bolts

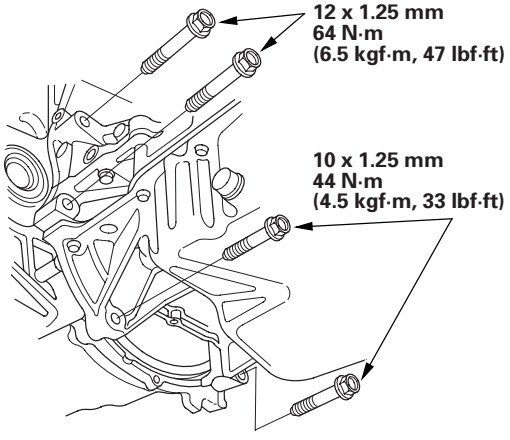

8. Install the front engine mount.

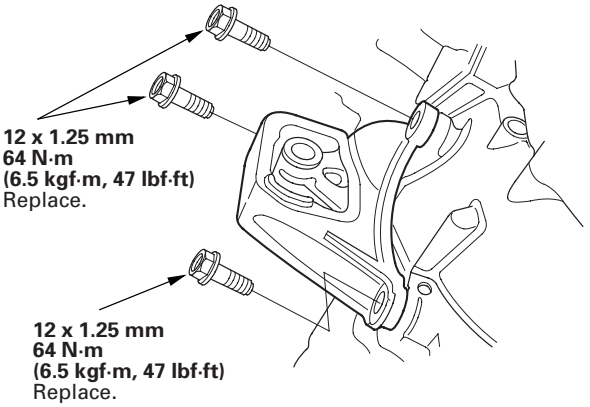

9. Install the clutch cover.

5-speed model:

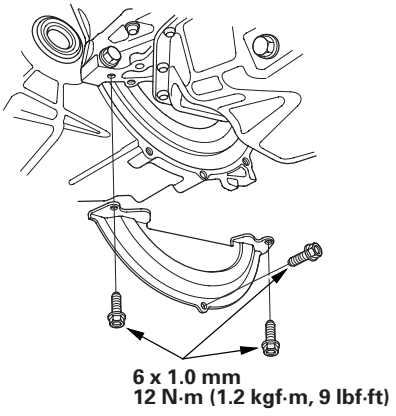

6-speed model:

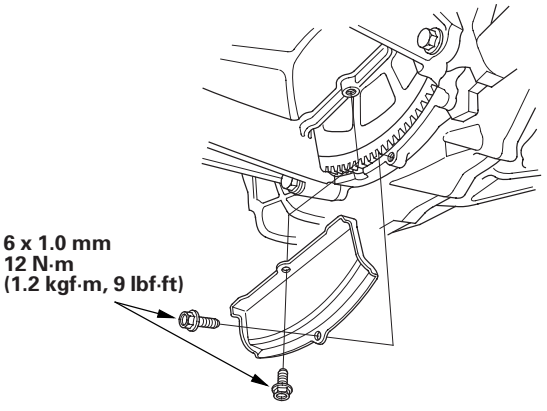

(cont'd)

Transmission Installation (cont'd)

10. Support the front suspension subframe with the subframe adapter and a jack.

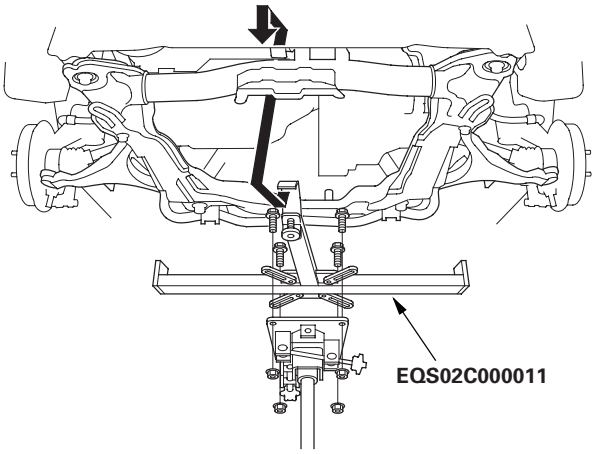

11. Install the front suspension subframe (A) in its original position by aligning it with the marks (B) you made in the removal procedure.

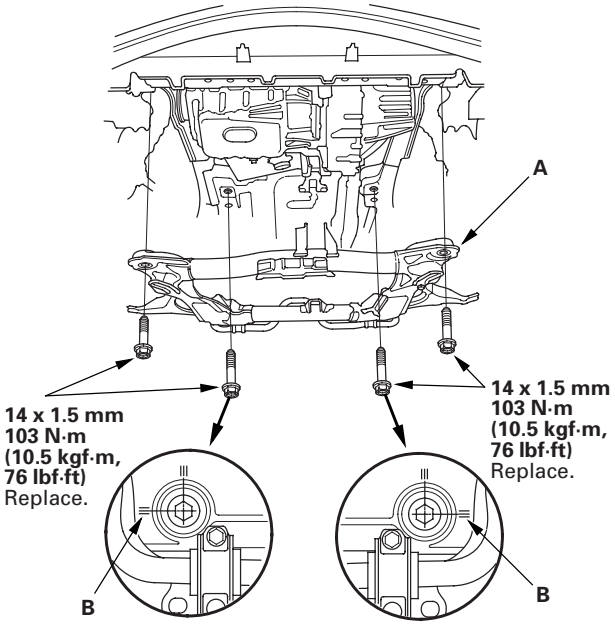

12. Install the three rear mounting bolts for the transmission rear mount.

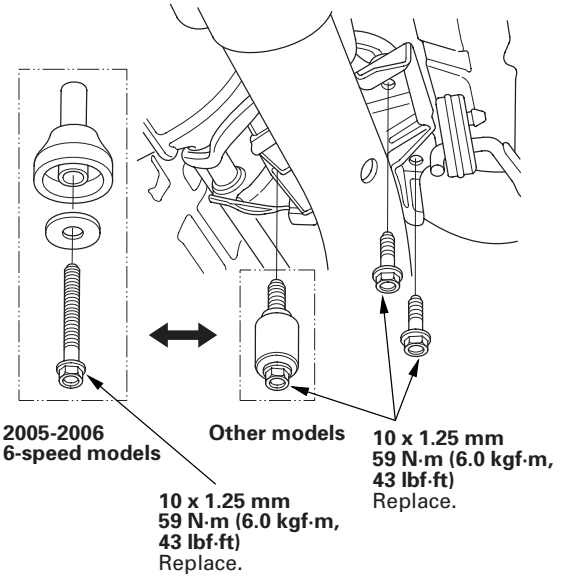

13. Install the front engine mount bracket mounting bolt.

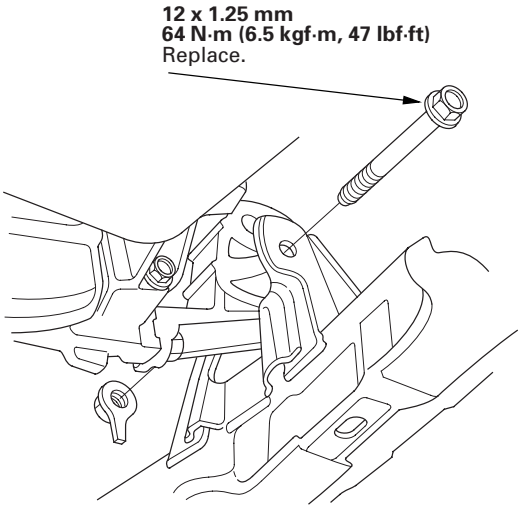

14. Install the intermediate shaft (see page 16-24).

15. Install the driveshafts (see page 16-17).

16. Install the three way catalytic converter (TWC) assembly (see step 20 on page 5-15).

17. Install the splash shield.

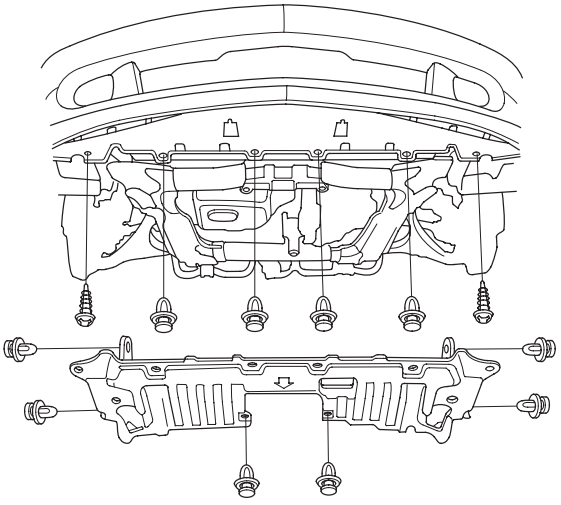

18. Install the transmission mount bracket (A) and the transmission mounting bolt (B).

2002 model:

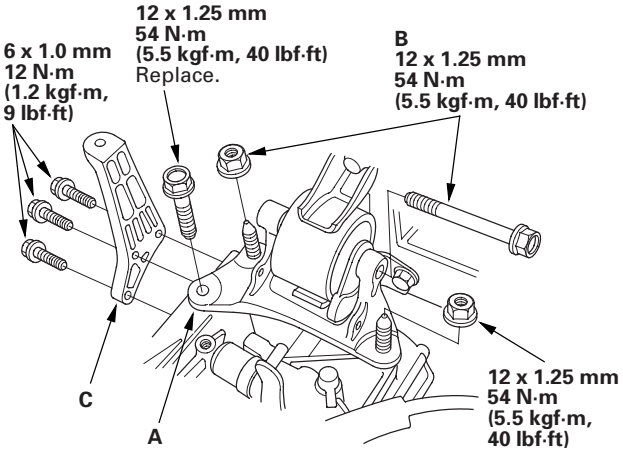

2003-2006 models:

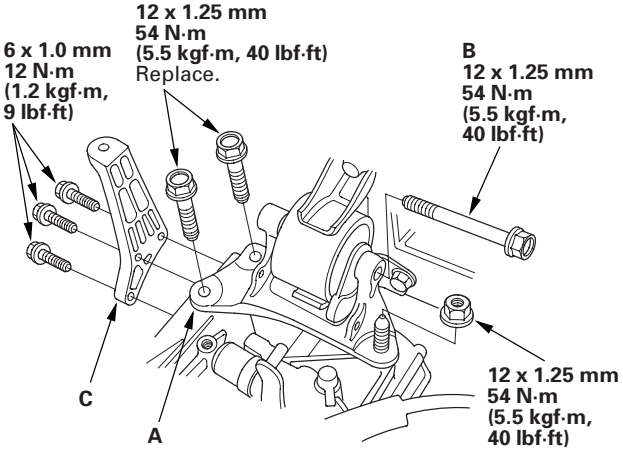

19. Install the air cleaner bracket (C).

(cont'd)

Transmission Installation (cont'd)

20. Install the two transmission upper mounting bolts.

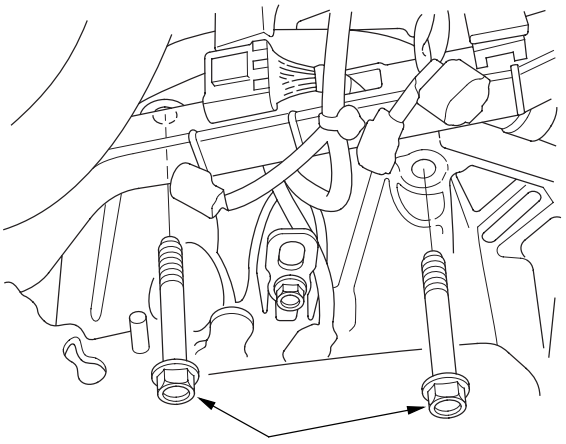

21. Remove the engine hanger and special tool from the engine.

22. Install the brake booster and evaporative emission (EVAP) line bracket mounting bolts (A), and the air cleaner housing bracket mounting bolt (B). Tighten the air cleaner housing bracket mounting bolt (C), and install the water pipe mounting bolt (D).

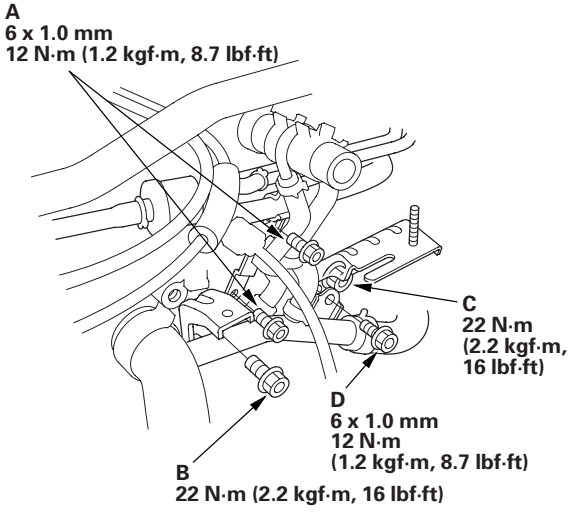

23. Install the engine harness cover.

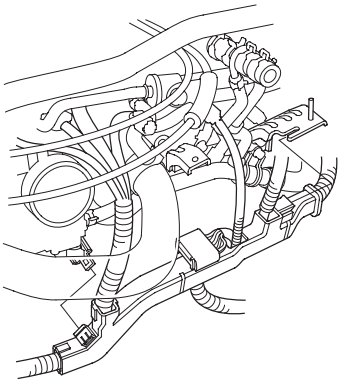

24. Apply super high temp urea grease (P/N 08798-9002) to the end of the slave cylinder rod. Install the slave cylinder. Be careful not to bend the clutch line.

Other models:

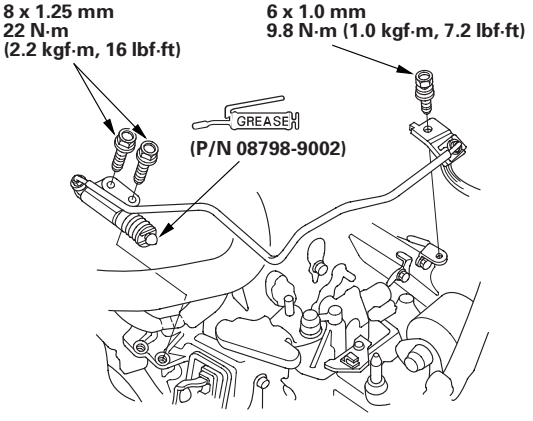

2005-2006 6-speed models:

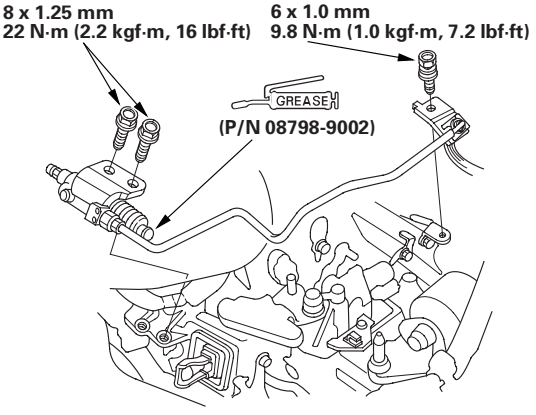

25. Install the harness clip.

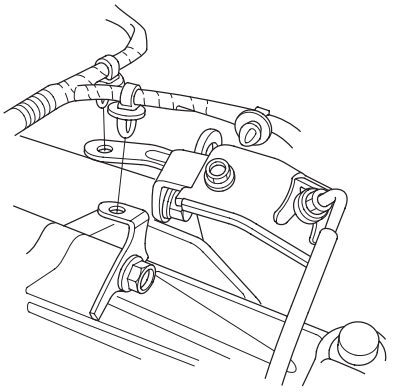

26. Install the cable bracket (A) and cables (B).

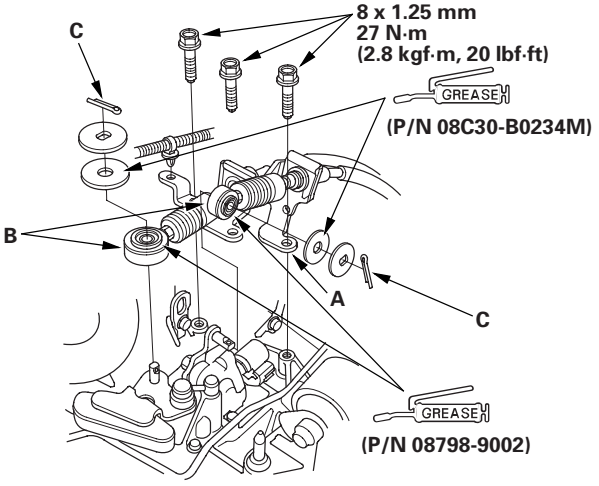

27. Apply a light coat of super high temp urea grease (P/N 08798-9002) and Honda silicone grease (P/N 08C30-B0234M) to the cable ends, and install new cotter pins (C).

28. Connect the back-up light switch connector (A), the vehicle speed sensor (VSS) connector (B), the reverse lockout solenoid connector (6-speed model) (C), and the output shaft (countershaft) speed sensor connector (D).

2002-2004 models:

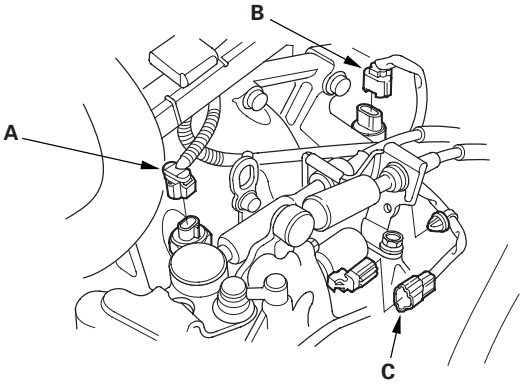

2005-2006 models:

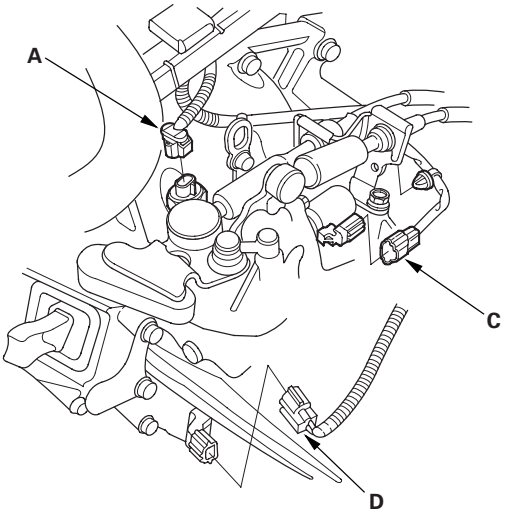

(cont'd)

Transmission Installation (cont'd)

29. Connect the transmission ground cable (A).

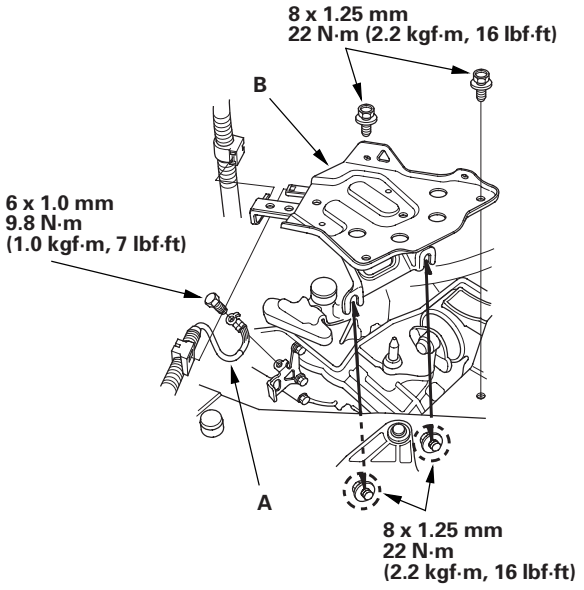

30. Install the battery base (B).

31. Install the intake air duct (see step 42 on page 5-19).

32. Install the air cleaner housing (see step 43 on page 5-19).

33. Install the intake manifold cover (see step 45 on page 5-19).

34. Install the battery. Clean the battery posts and cable terminals with sandpaper, then assemble them and apply grease to prevent corrosion. Connect the positive cable to the battery first, then connect the negative cable.

35. Refill the transmission fluid (see page 13-4).

36. Check the shift lever and clutch operation.

37. Check the front wheel alignment (see page 18-4).

38. Enter the audio anti-theft codes, then enter the customer's audio station presets, and set the clock.

39. 2002-2004 models: Do the ECM idle learn procedure (see page 11-349).

40. Do the power window control unit reset procedure (see page 22-148).

41. Test-drive the vehicle.

Transmission Disassembly

Exploded View-Clutch Housing

2002-2004 5-speed models:

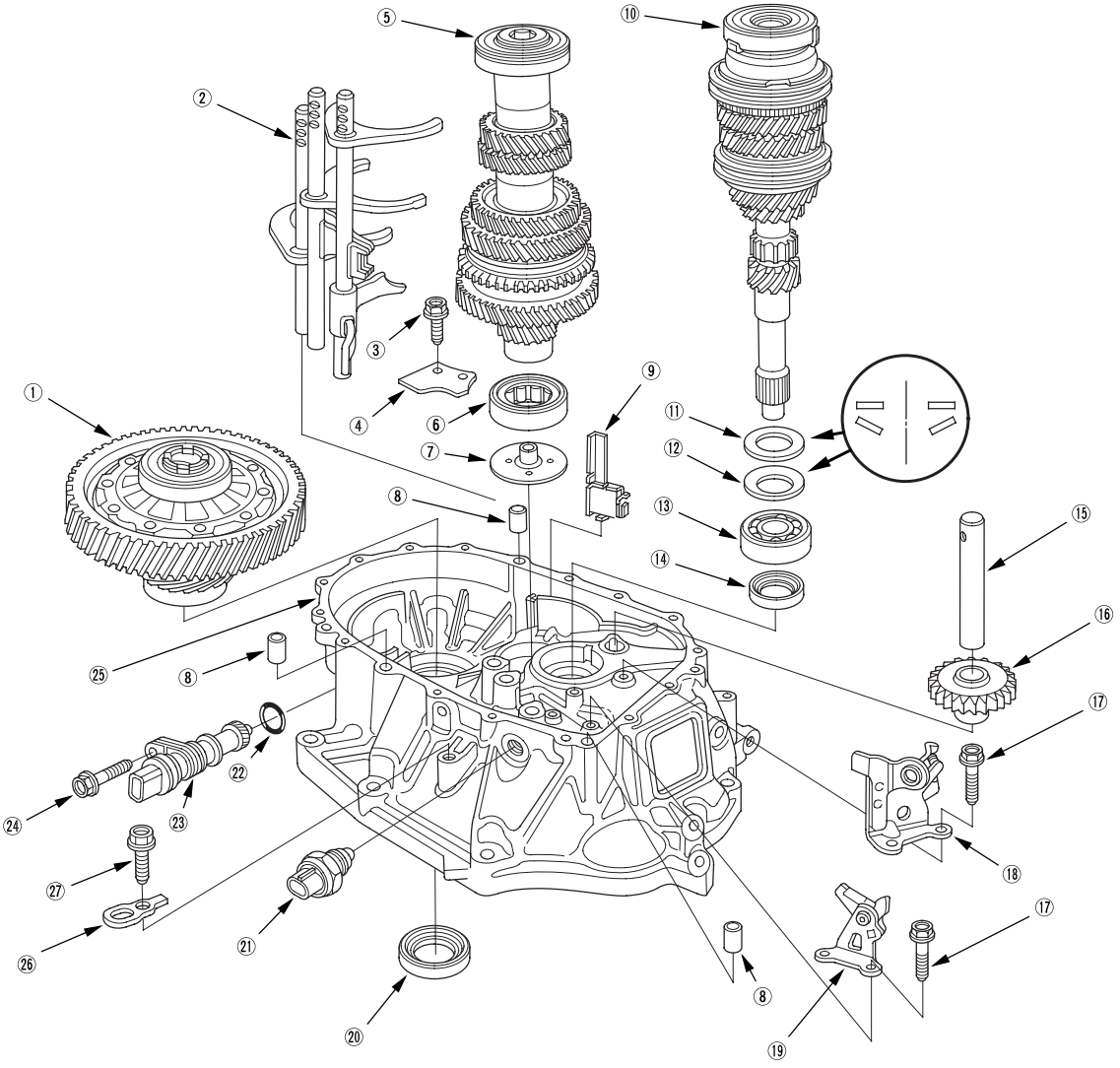

① **DIFFERENTIAL ASSEMBLY**
② **SHIFT FORK ASSEMBLY**
③ **6 mm FLANGE BOLT**
12 N·m (1.2 kgf·m, 9 lbf·ft)
④ **BEARING SET PLATE**
⑤ **COUNTERSHAFT ASSEMBLY**
⑥ **NEEDLE BEARING**
⑦ **OIL GUIDE PLATE C**
⑧ **14 x 20 mm DOWEL PIN**
⑨ **MAGNET**
⑩ **MAINSHAFT ASSEMBLY**
⑪ **28 mm WASHER**
⑫ **28 mm SPRING WASHER**
⑬ **BALL BEARING**
⑭ **28 x 43 x 7 mm OIL SEAL**
Replace.
⑮ **REVERSE GEAR SHAFT**
⑯ **REVERSE IDLER GEAR**
⑰ **6 mm SPECIAL BOLT**
15 N·m (1.5 kgf·m, 11 lbf·ft)
⑱ **REVERSE SHIFT FORK**
⑲ **REVERSE LOCK CAM**
⑳ **35 x 58 x 8 mm OIL SEAL**
Replace.
㉑ **BACK-UP LIGHT SWITCH**
29 N·m (3.0 kgf·m, 22 lbf·ft)
㉒ **O-RING**
Replace.
㉓ **VEHICLE SPEED SENSOR (VSS)**
㉔ **8 mm FLANGE BOLT**
22 N·m (2.2 kgf·m, 16 lbf·ft)
㉕ **CLUTCH HOUSING**
㉖ **TRANSMISSION HANGER**
㉗ **10 mm FLANGE BOLT**
44 N·m (4.5 kgf·m, 33 lbf·ft)

(cont'd)

Transmission Disassembly (cont'd)

Exploded View-Clutch Housing

2005-2006 5-speed models:

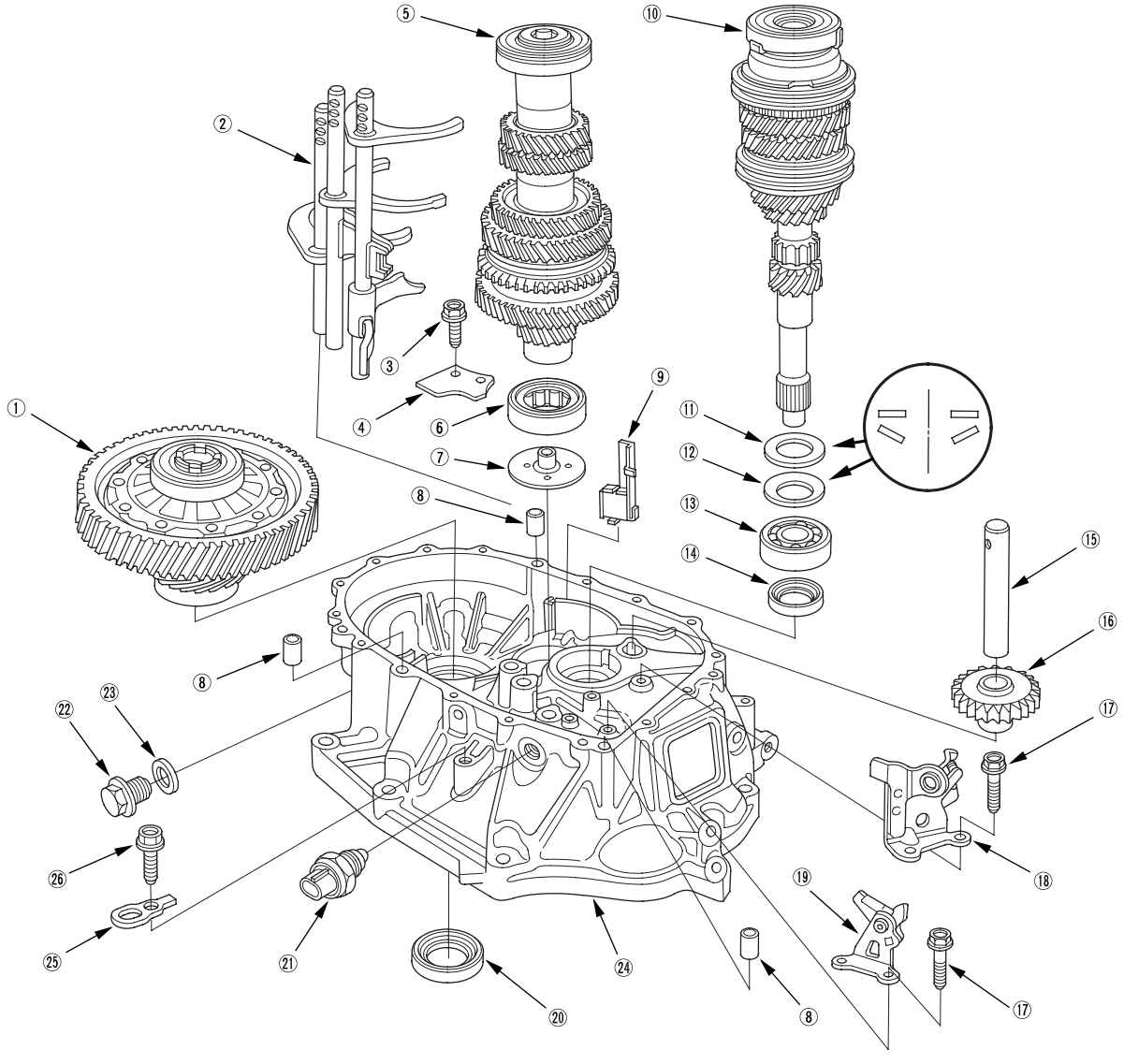

① **DIFFERENTIAL ASSEMBLY**
② **SHIFT FORK ASSEMBLY**
③ **6 mm FLANGE BOLT**
12 N·m (1.2 kgf·m, 8.7 lbf·ft)
④ **BEARING SET PLATE**
⑤ **COUNTERSHAFT ASSEMBLY**
⑥ **NEEDLE BEARING**
⑦ **OIL GUIDE PLATE C**
⑧ **14 x 20 mm DOWEL PIN**
⑨ **MAGNET**
⑩ **MAINSHAFT ASSEMBLY**
⑪ **28 mm WASHER**
⑫ **28 mm SPRING WASHER**
⑬ **BALL BEARING**
⑭ **28 x 43 x 7 mm OIL SEAL**
Replace.
⑮ **REVERSE GEAR SHAFT**
⑯ **REVERSE IDLER GEAR**
⑰ **6 mm SPECIAL BOLT**
15 N·m (1.5 kgf·m, 11 lbf·ft)
⑱ **REVERSE SHIFT FORK**
⑲ **REVERSE LOCK CAM**
⑳ **35 x 58 x 8 mm OIL SEAL**
Replace.
㉑ **BACK-UP LIGHT SWITCH**
29 N·m (3.0 kgf·m, 22 lbf·ft)
㉒ **20 mm BOLT**
44 N·m (4.5 kgf·m, 33 lbf·ft)
㉓ **20 mm WASHER**
Replace.
㉔ **CLUTCH HOUSING**
㉕ **TRANSMISSION HANGER**
㉖ **10 mm FLANGE BOLT**
44 N·m (4.5 kgf·m, 33 lbf·ft)

2002-2004 6-speed models:

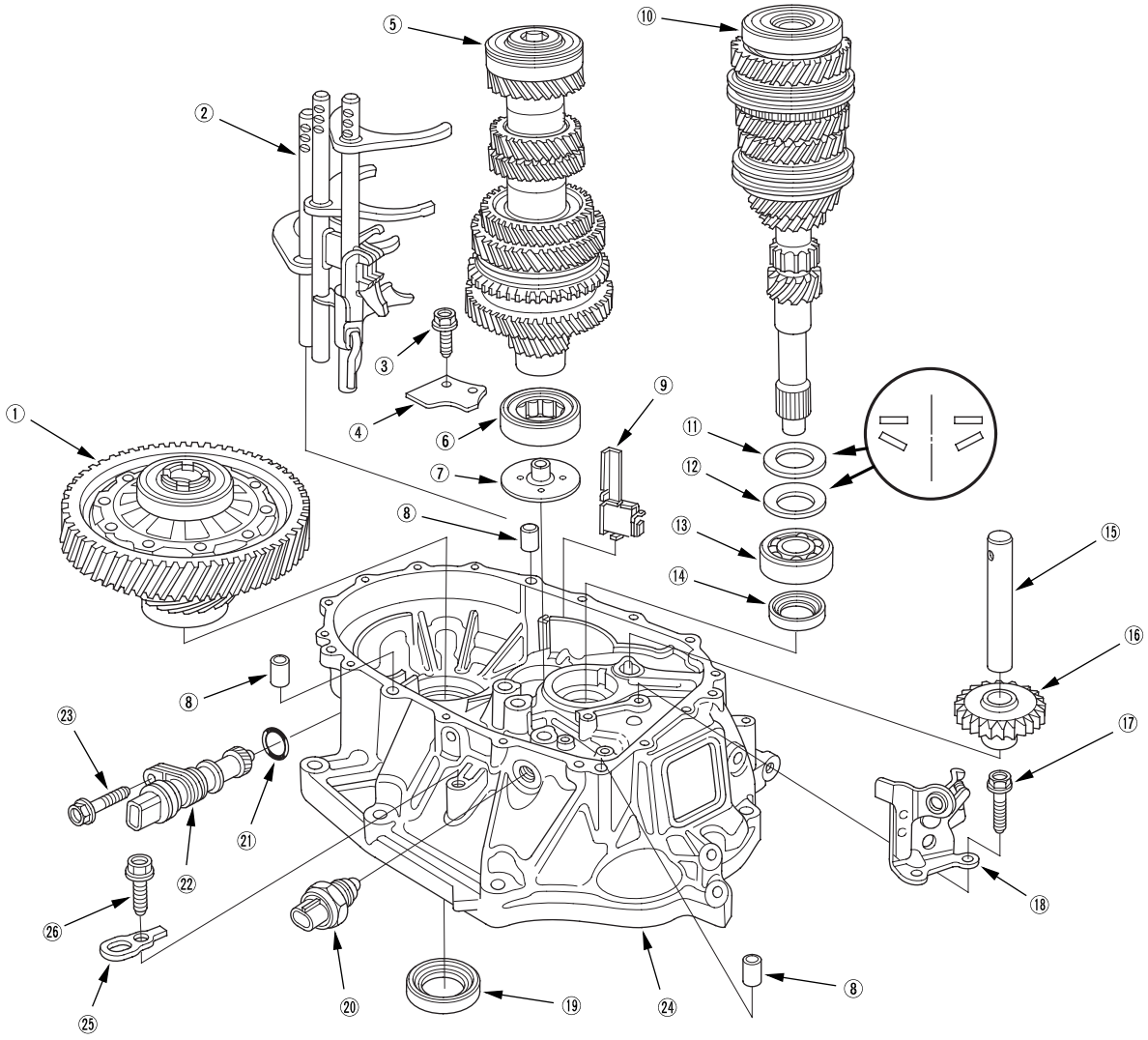

① **DIFFERENTIAL ASSEMBLY**
② **SHIFT FORK ASSEMBLY**
③ **6 mm FLANGE BOLT**
12 N·m (1.2 kgf·m, 9 lbf·ft)
④ **BEARING SET PLATE**
⑤ **COUNTERSHAFT ASSEMBLY**
⑥ **NEEDLE BEARING**
⑦ **OIL GUIDE PLATE C**
⑧ **14 x 20 mm DOWEL PIN**
⑨ **MAGNET**
⑩ **MAINSHAFT ASSEMBLY**
⑪ **28 mm WASHER**
⑫ **28 mm SPRING WASHER**
⑬ **BALL BEARING**
⑭ **28 x 43 x 7 mm OIL SEAL**
Replace.
⑮ **REVERSE GEAR SHAFT**
⑯ **REVERSE IDLER GEAR**
⑰ **6 mm SPECIAL BOLT**
15 N·m (1.5 kgf·m, 11 lbf·ft)
⑱ **REVERSE SHIFT FORK**
⑲ **35 x 58 x 8 mm OIL SEAL**
Replace.
⑳ **BACK-UP LIGHT SWITCH**
29 N·m (3.0 kgf·m, 22 lbf·ft)
㉑ **O-RING**
Replace.
㉒ **VEHICLE SPEED SENSOR (VSS)**
㉓ **8 mm FLANGE BOLT**
22 N·m (2.2 kgf·m, 16 lbf·ft)
㉔ **CLUTCH HOUSING**
㉕ **TRANSMISSION HANGER**
㉖ **10 mm FLANGE BOLT**
44 N·m (4.5 kgf·m, 33 lbf·ft)

(cont'd)

Transmission Disassembly (cont'd)

Exploded View-Clutch Housing

2005-2006 6-speed models:

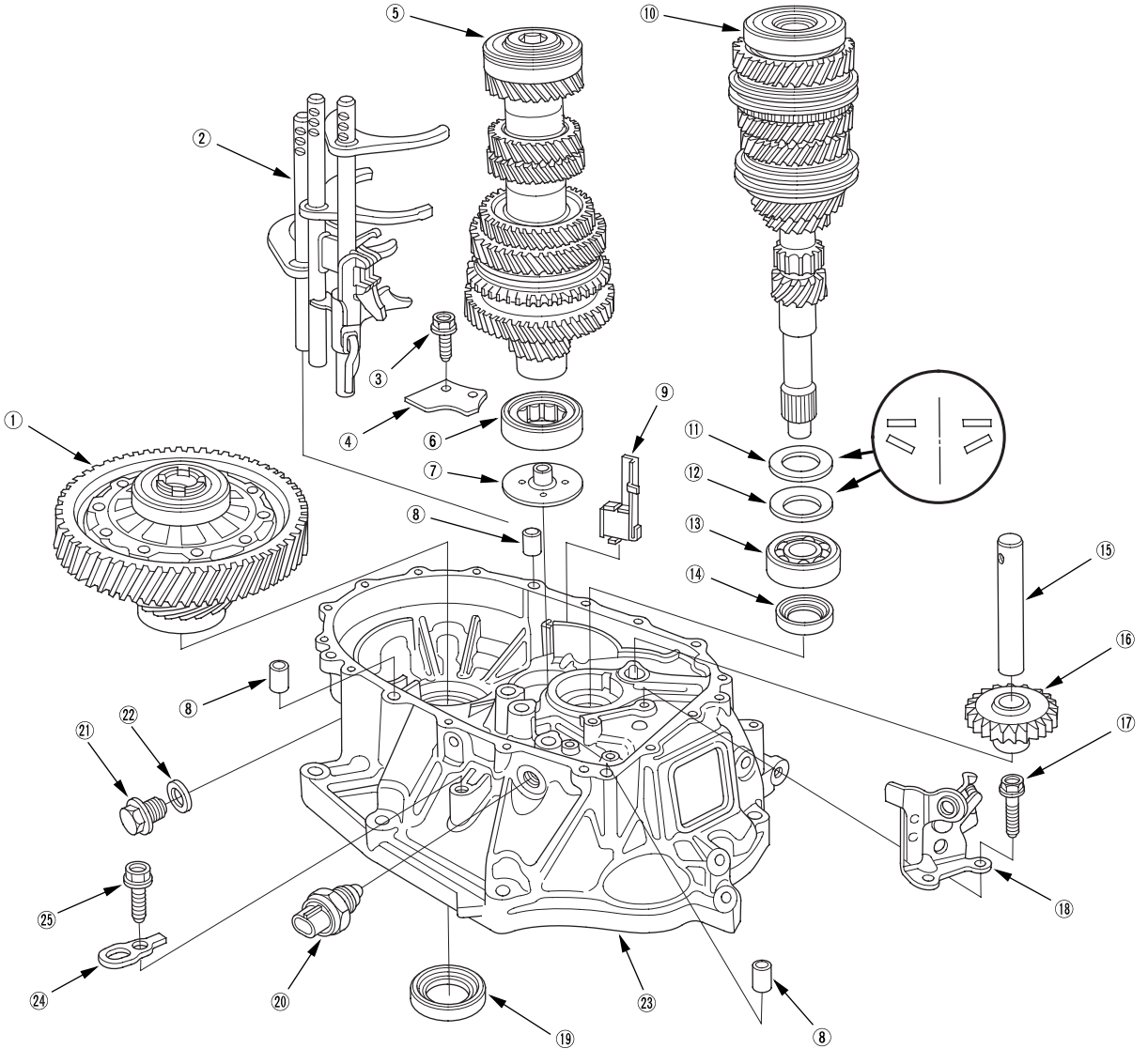

① **DIFFERENTIAL ASSEMBLY**
② **SHIFT FORK ASSEMBLY**
③ **6 mm FLANGE BOLT**
12 N·m (1.2 kgf·m, 8.7 lbf·ft)
④ **BEARING SET PLATE**
⑤ **COUNTERSHAFT ASSEMBLY**
⑥ **NEEDLE BEARING**
⑦ **OIL GUIDE PLATE C**
⑧ **14 x 20 mm DOWEL PIN**
⑨ **MAGNET**
⑩ **MAINSHAFT ASSEMBLY**
⑪ **28 mm WASHER**
⑫ **28 mm SPRING WASHER**
⑬ **BALL BEARING**
⑭ **28 x 43 x 7 mm OIL SEAL**
Replace.
⑮ **REVERSE GEAR SHAFT**
⑯ **REVERSE IDLER GEAR**
⑰ **6 mm SPECIAL BOLT**
15 N·m (1.5 kgf·m, 11 lbf·ft)
⑱ **REVERSE SHIFT FORK**
⑲ **35 x 58 x 8 mm OIL SEAL**
Replace.
⑳ **BACK-UP LIGHT SWITCH**
29 N·m (3.0 kgf·m, 22 lbf·ft)
㉑ **20 mm BOLT**
44 N·m (4.5 kgf·m, 33 lbf·ft)
㉒ **20 mm WASHER**
Replace.
㉓ **CLUTCH HOUSING**
㉔ **TRANSMISSION HANGER**
㉕ **10 mm FLANGE BOLT**
44 N·m (4.5 kgf·m, 33 lbf·ft)

Exploded View-Transmission Housing

2002-2004 5-speed models:

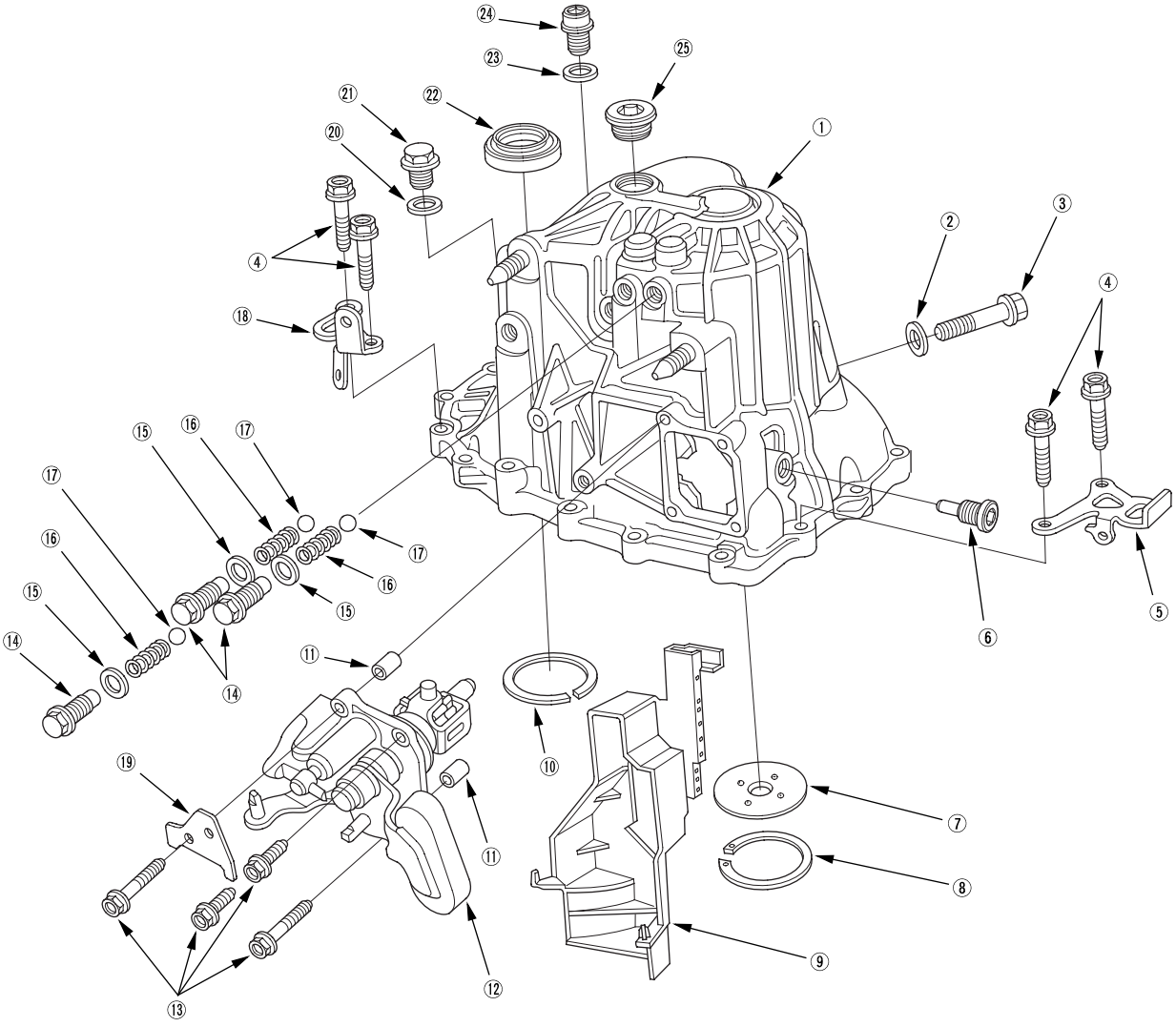

① **TRANSMISSION HOUSING**
② **10 mm WASHER**
Replace.
③ **10 mm FLANGE BOLT**
44 N·m (4.5 kgf·m, 33 lbf·ft)
④ **8 mm FLANGE BOLT**
27 N·m (2.8 kgf·m, 20 lbf·ft)
⑤ **TRANSMISSION HANGER A**
⑥ **INTERLOCK BOLT**
39 N·m (4.0 kgf·m, 29 lbf·ft)
⑦ **OIL GUIDE PLATE M**
⑧ **72 mm SHIM**
⑨ **OIL GUTTER PLATE**
⑩ **80 mm SHIM**
⑪ **8 x 14 mm DOWEL PIN**
⑫ **CHANGE LEVER ASSEMBLY**
⑬ **6 mm FLANGE BOLT**
12 N·m (1.2 kgf·m, 9 lbf·ft)
⑭ **DETENT BOLT**
22 N·m (2.2 kgf·m, 16 lbf·ft)
⑮ **12 mm WASHER**
Replace.
⑯ **SPRING**
⑰ **STEEL BALL**
⑱ **TRANSMISSION HANGER B**
⑲ **CLUTCH LINE CLIP BRACKET**
⑳ **20 mm WASHER**
Replace.
㉑ **FILLER PLUG**
44 N·m (4.5 kgf·m, 33 lbf·ft)
㉒ **40 x 56 x 8 mm OIL SEAL**
Replace.
㉓ **14 mm WASHER**
Replace.
㉔ **DRAIN PLUG**
39 N·m (4.0 kgf·m, 29 lbf·ft)
㉕ **32 mm SEALING CAP**
34 N·m (3.5 kgf·m, 25 lbf·ft)

(cont'd)

Transmission Disassembly (cont'd)

Exploded View-Transmission Housing

2005-2006 5-speed models:

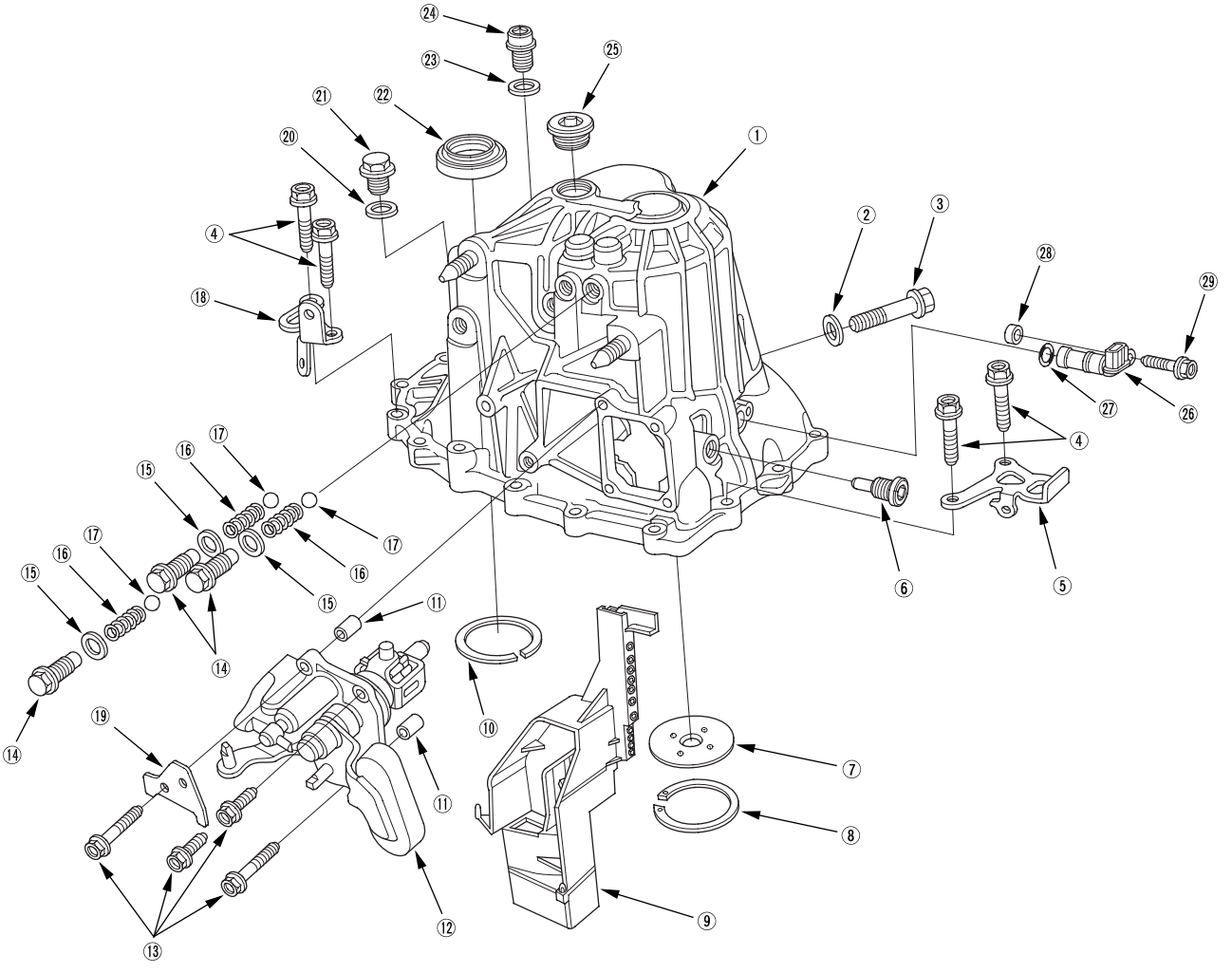

① **TRANSMISSION HOUSING**
② **10 mm WASHER**
Replace.
③ **10 mm FLANGE BOLT**
44 N·m (4.5 kgf·m, 33 lbf·ft)
④ **8 mm FLANGE BOLT**
27 N·m (2.8 kgf·m, 20 lbf·ft)
⑤ **TRANSMISSION HANGER A**
⑥ **INTERLOCK BOLT**
39 N·m (4.0 kgf·m, 29 lbf·ft)
⑦ **OIL GUIDE PLATE M**
⑧ **72 mm SHIM**
⑨ **OIL GUTTER PLATE**
⑩ **80 mm SHIM**
⑪ **8 x 14 mm DOWEL PIN**
⑫ **CHANGE LEVER ASSEMBLY**
⑬ **6 mm FLANGE BOLT**
12 N·m (1.2 kgf·m, 8.7 lbf·ft)
⑭ **DETENT BOLT**
22 N·m (2.2 kgf·m, 16 lbf·ft)
⑮ **12 mm WASHER**
Replace.
⑯ **SPRING**
⑰ **STEEL BALL**
⑱ **TRANSMISSION HANGER B**
⑲ **CLUTCH LINE CLIP BRACKET**
⑳ **20 mm WASHER**
Replace.
㉑ **FILLER PLUG**
44 N·m (4.5 kgf·m, 33 lbf·ft)
㉒ **40 x 56 x 8 mm OIL SEAL**
Replace.
㉓ **14 mm WASHER**
Replace.
㉔ **DRAIN PLUG**
39 N·m (4.0 kgf·m, 29 lbf·ft)
㉕ **32 mm SEALING CAP**
34 N·m (3.5 kgf·m, 25 lbf·ft)
㉖ **OUTPUT SHAFT (COUNTERSHAFT) SPEED SENSOR**
㉗ **O-RING**
Replace.
㉘ **PLAIN WASHER**
㉙ **6 mm FLANGE BOLT**
12 N·m (1.2 kgf·m, 8.7 lbf·ft)

2002-2004 6-speed models:

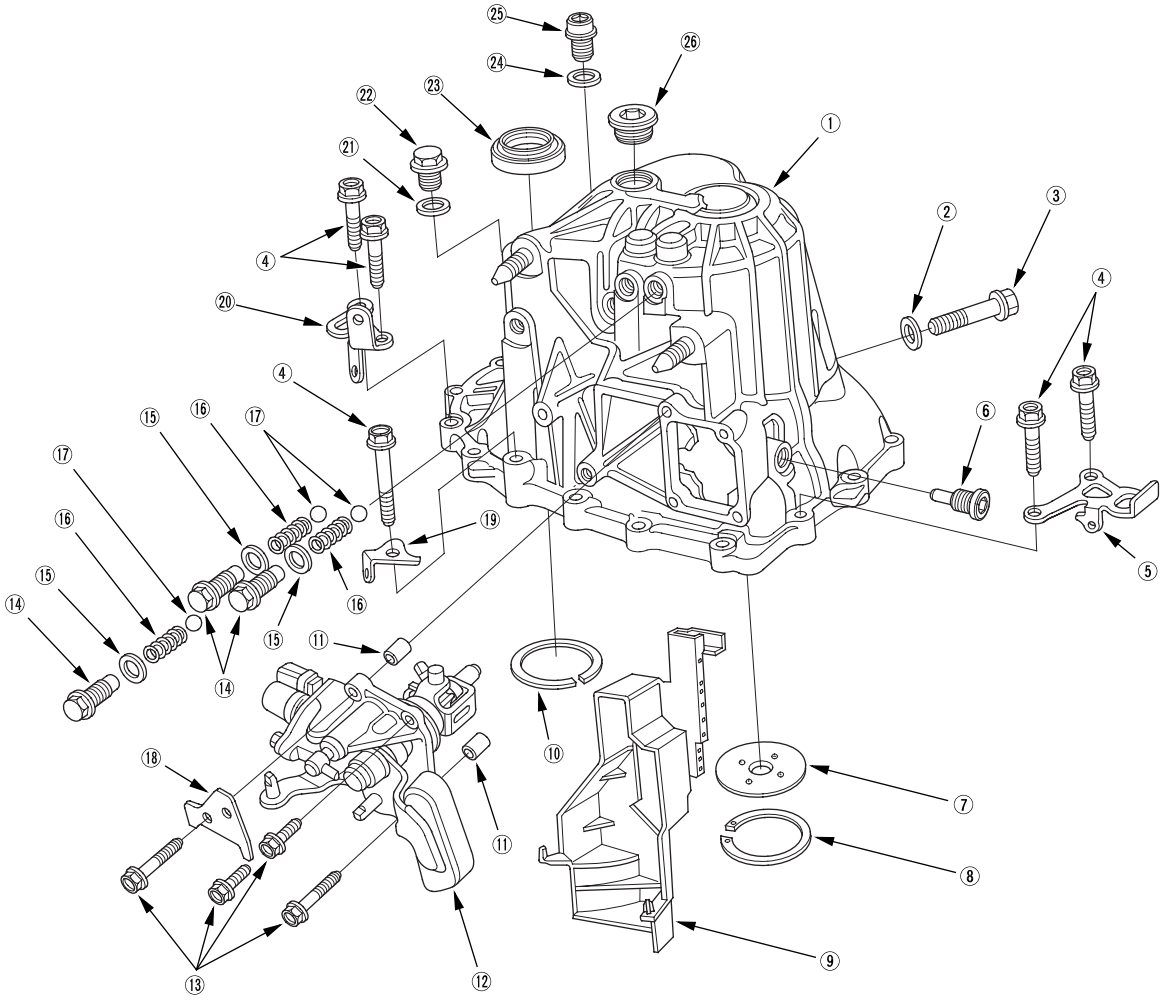

① **TRANSMISSION HOUSING**
② **10 mm WASHER**
Replace.
③ **10 mm FLANGE BOLT**
44 N·m (4.5 kgf·m, 33 lbf·ft)
④ **8 mm FLANGE BOLT**
27 N·m (2.8 kgf·m, 20 lbf·ft)
⑤ **TRANSMISSION HANGER A**
⑥ **INTERLOCK BOLT**
39 N·m (4.0 kgf·m, 29 lbf·ft)
⑦ **OIL GUIDE PLATE M**
⑧ **72 mm SHIM**
⑨ **OIL GUTTER PLATE**
⑩ **80 mm SHIM**
⑪ **8 x 14 mm DOWEL PIN**
⑫ **CHANGE LEVER ASSEMBLY**
⑬ **6 mm FLANGE BOLT**
12 N·m (1.2 kgf·m, 9 lbf·ft)
⑭ **DETENT BOLT**
22 N·m (2.2 kgf·m, 16 lbf·ft)
⑮ **12 mm WASHER**
Replace.
⑯ **SPRING**
⑰ **STEEL BALL**
⑱ **CLUTCH LINE CLIP BRACKET**
⑲ **HARNESS STAY**
⑳ **TRANSMISSION HANGER B**
㉑ **20 mm WASHER**
Replace.
㉒ **FILLER PLUG**
44 N·m (4.5 kgf·m, 33 lbf·ft)
㉓ **40 x 56 x 8 mm OIL SEAL**
Replace.
㉔ **14 mm WASHER**
Replace.
㉕ **DRAIN PLUG**
39 N·m (4.0 kgf·m, 29 lbf·ft)
㉖ **32 mm SEALING CAP**
34 N·m (3.5 kgf·m, 25 lbf·ft)

(cont'd)

Transmission Disassembly (cont'd)

Exploded View-Transmission Housing

2005-2006 6-speed models:

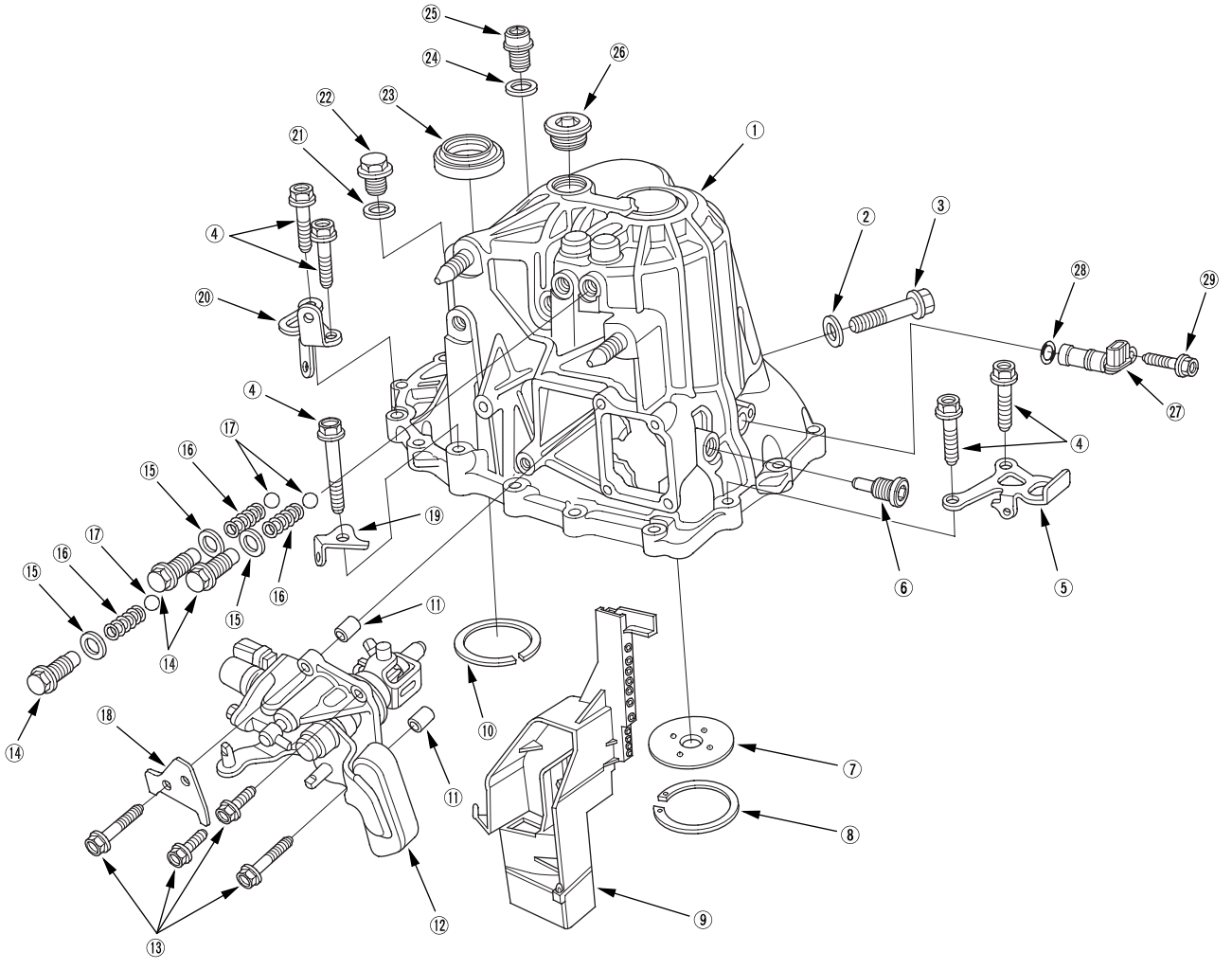

① **TRANSMISSION HOUSING**
② **10 mm WASHER**
Replace.
③ **10 mm FLANGE BOLT**
44 N·m (4.5 kgf·m, 33 lbf·ft)
④ **8 mm FLANGE BOLT**
27 N·m (2.8 kgf·m, 20 lbf·ft)
⑤ **TRANSMISSION HANGER A**
⑥ **INTERLOCK BOLT**
39 N·m (4.0 kgf·m, 29 lbf·ft)
⑦ **OIL GUIDE PLATE M**
⑧ **72 mm SHIM**
⑨ **OIL GUTTER PLATE**
⑩ **80 mm SHIM**
⑪ **8 x 14 mm DOWEL PIN**
⑫ **CHANGE LEVER ASSEMBLY**
⑬ **6 mm FLANGE BOLT**
12 N·m (1.2 kgf·m, 8.7 lbf·ft)
⑭ **DETENT BOLT**
22 N·m (2.2 kgf·m, 16 lbf·ft)
⑮ **12 mm WASHER**
Replace.
⑯ **SPRING**
⑰ **STEEL BALL**
⑱ **CLUTCH LINE CLIP BRACKET**
⑲ **HARNESS STAY**
⑳ **TRANSMISSION HANGER B**
㉑ **20 mm WASHER**
Replace.
㉒ **FILLER PLUG**
44 N·m (4.5 kgf·m, 33 lbf·ft)
㉓ **40 x 56 x 8 mm OIL SEAL**
Replace.
㉔ **14 mm WASHER**
Replace.
㉕ **DRAIN PLUG**
39 N·m (4.0 kgf·m, 29 lbf·ft)
㉖ **32 mm SEALING CAP**
34 N·m (3.5 kgf·m, 25 lbf·ft)
㉗ **OUTPUT SHAFT (COUNTERSHAFT) SPEED SENSOR**
㉘ **O-RING**
Replace.
㉙ **6 mm FLANGE BOLT**
12 N·m (1.2 kgf·m, 8.7 lbf·ft)

NOTE:
- Place the clutch housing on two pieces of wood thick enough to keep the mainshaft from hitting the workbench.
- 6-speed model is shown, 5-speed model is similar.

1. Remove the detent bolts (A), springs, steel balls, and the back-up light switch (B).

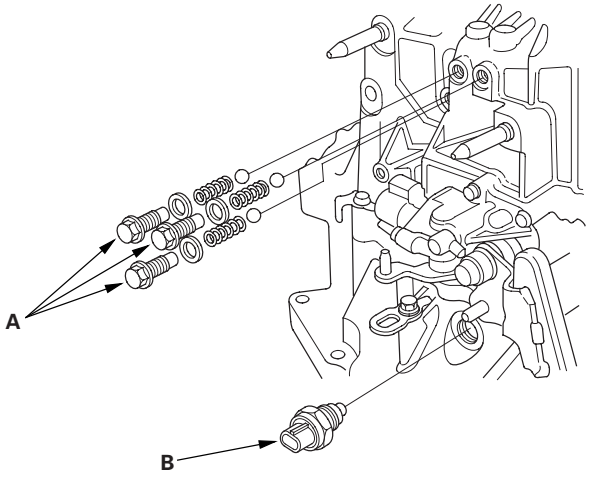

2. 2002-2004 models: Remove the vehicle speed sensor (VSS) (A) and O-ring (B).

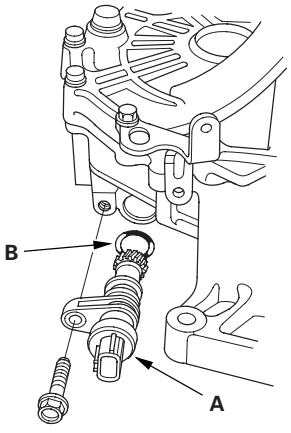

3. 2005-2006 models: Remove the 20 mm bolt (A) and the 20 mm washer (B).

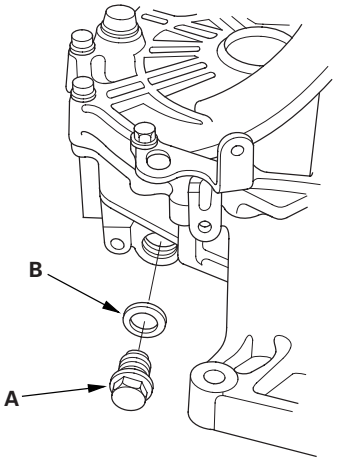

4. Remove the change lever assembly (A), the 8 x 14 mm dowel pins (B), the clutch line clip bracket (C), and the interlock bolt (D).

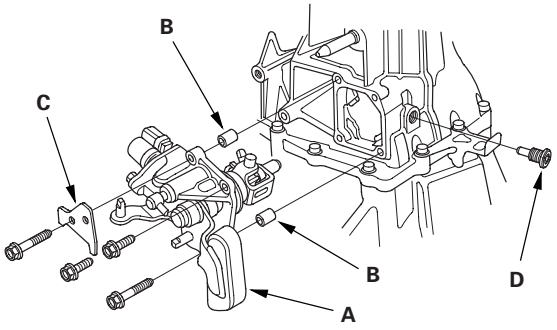

(cont'd)

Transmission Disassembly (cont'd)

5. 2002-2004 models: Remove the drain plug (A), the filler plug (B), and the 10 mm flange bolt (C).

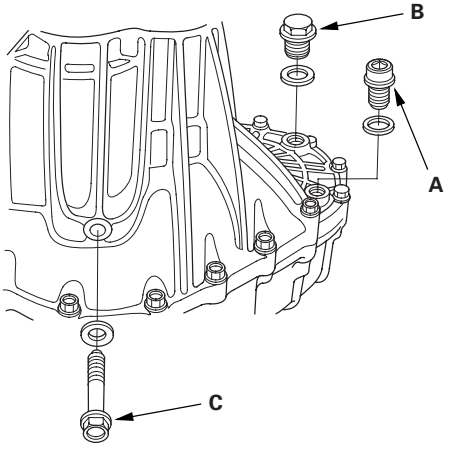

6. 2005-2006 models: Remove the drain plug (A), the filler plug (B), the 10 mm flange bolt (C), the output shaft (countershaft) speed sensor (D), the plain washer (5-speed model) (E), and the O-ring (F).

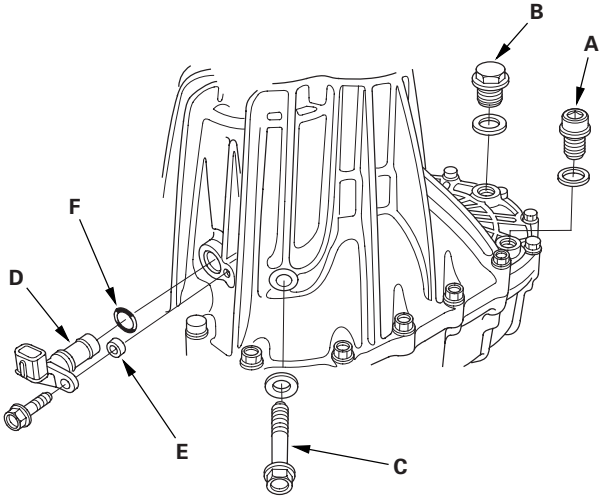

7. Remove the 8 mm flange bolts in a crisscross pattern in several steps.

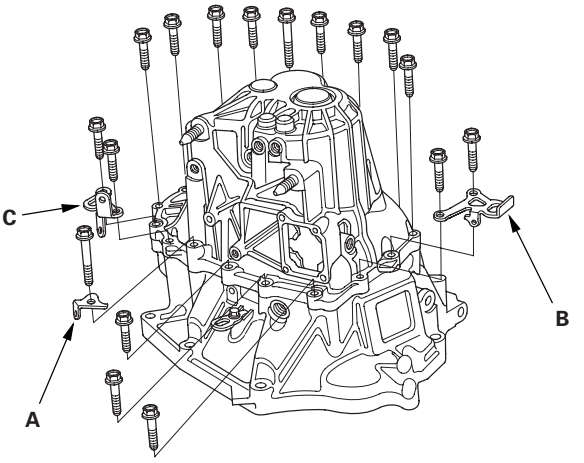

8. Remove the harness bracket (A) (6-speed model only), the transmission hanger A (B), and the transmission hanger B (C).

9. Remove the 32 mm sealing cap (A).

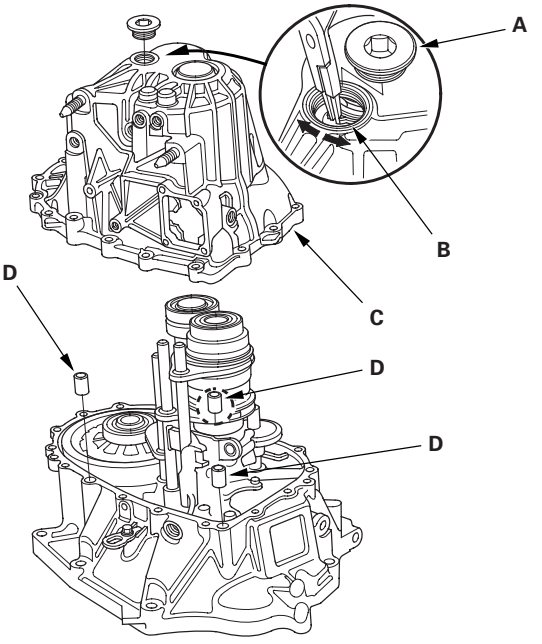

10. Expand the 72 mm snap ring (B) on the countershaft ball bearing, and remove it from the groove using a pair of snap ring pliers.

11. Remove the transmission housing (C) and the 14 x 20 mm dowel pins (D).

12. 5-speed model: Remove the reverse lock cam.

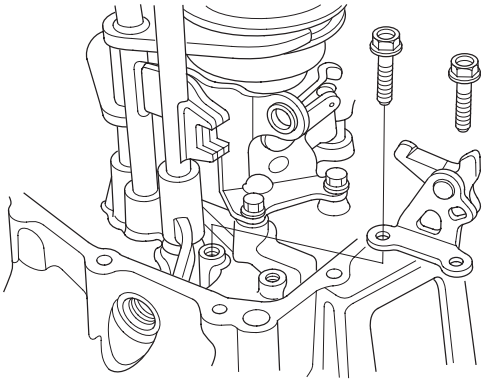

13. Remove the reverse idler gear (A) and the reverse gear shaft (B).

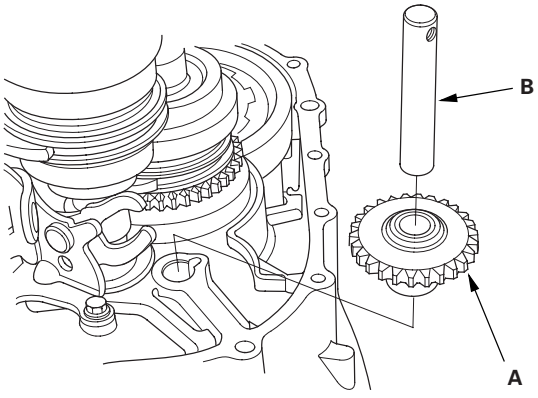

14. Remove the reverse shift fork.

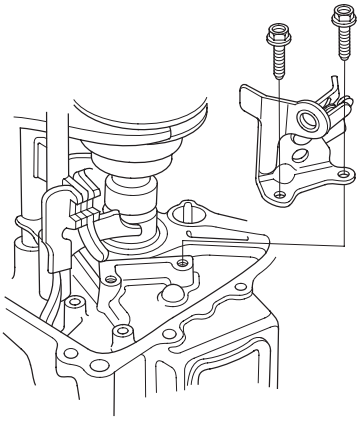

15. Apply tape to the mainshaft splines to protect the seal, then remove the mainshaft assembly (A) and the countershaft assembly (B) with the shift forks (C) from the clutch housing (D).

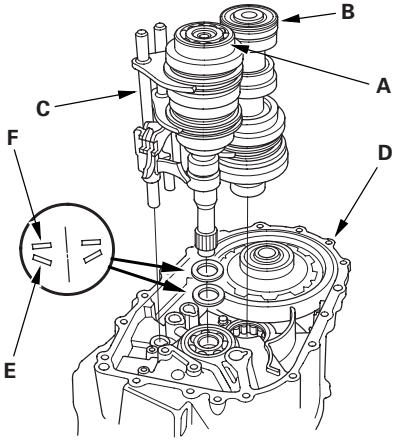

16. Remove the 28 mm spring washer (E) and the 28 mm washer (F).

(cont'd)

Transmission Disassembly (cont'd)

17. Remove the differential assembly (A) and the magnet (B).

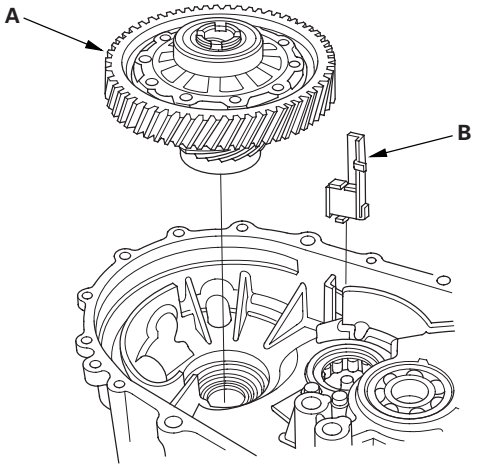

18. Remove the oil gutter plate (A), the oil guide plate M, and the 72 mm shim (B).

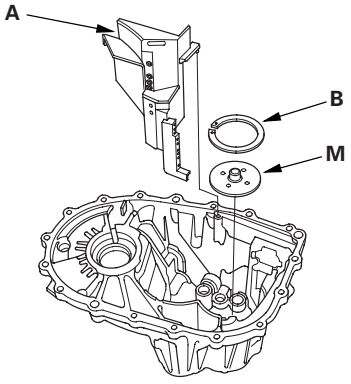

Reverse Shift Fork Clearance Inspection

1. Measure the clearance between the reverse idler gear (A) and the reverse shift fork (B) with a feeler gauge (C). If the clearance is more than the service limit, go to step 2.

   Standard: 0.20—0.59 mm (0.007—0.024 in.)
   Service Limit: 1.3 mm (0.051 in.)

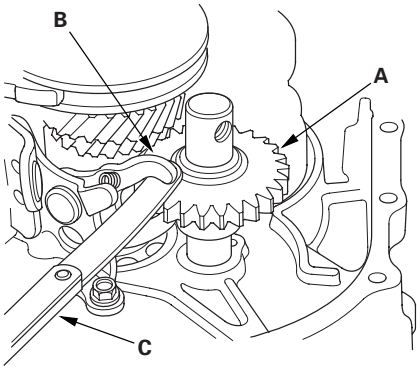

2. Measure the width of the reverse shift fork.

   - If the width is not within the standard, replace the reverse shift fork.
   - If the width is within the standard, replace the reverse gear.

   Standard: 13.4—13.7 mm (0.527—0.539 in.)

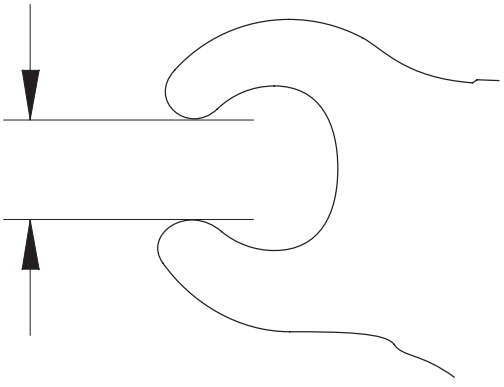

Change Lever Clearance Inspection

1. Measure the clearance between the change lever (A) and the select lever (B) with a feeler gauge (C). If the clearance is more than the service limit, go to step 2.

   Standard: 0.05—0.25 mm (0.002—0.010 in.)
   Service Limit: 0.50 mm (0.020 in.)

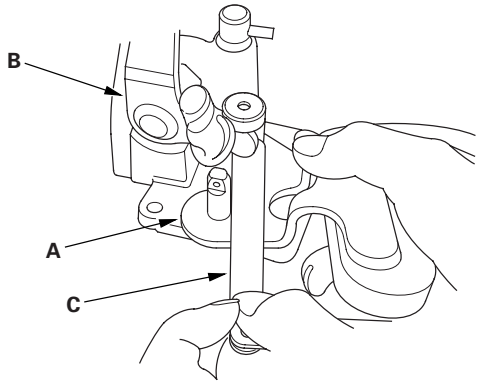

2. Measure the groove of the change lever.

   - If the groove is not within the standard, replace the change lever.
   - If the groove is within the standard, replace the select lever.

   Standard: 15.00—15.10 mm (0.591—0.594 in.)

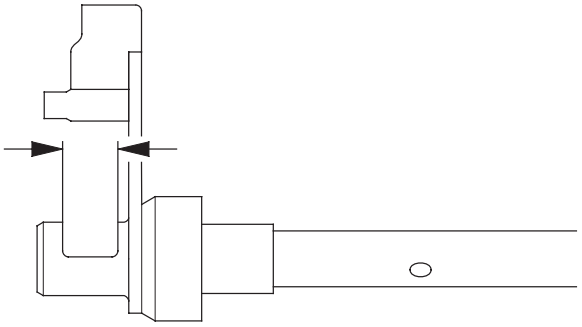

Change Lever Assembly Disassembly/Reassembly

Prior to reassembling, clean all the parts in solvent, dry them, and apply grease to the contact surfaces as shown.

5-speed model:

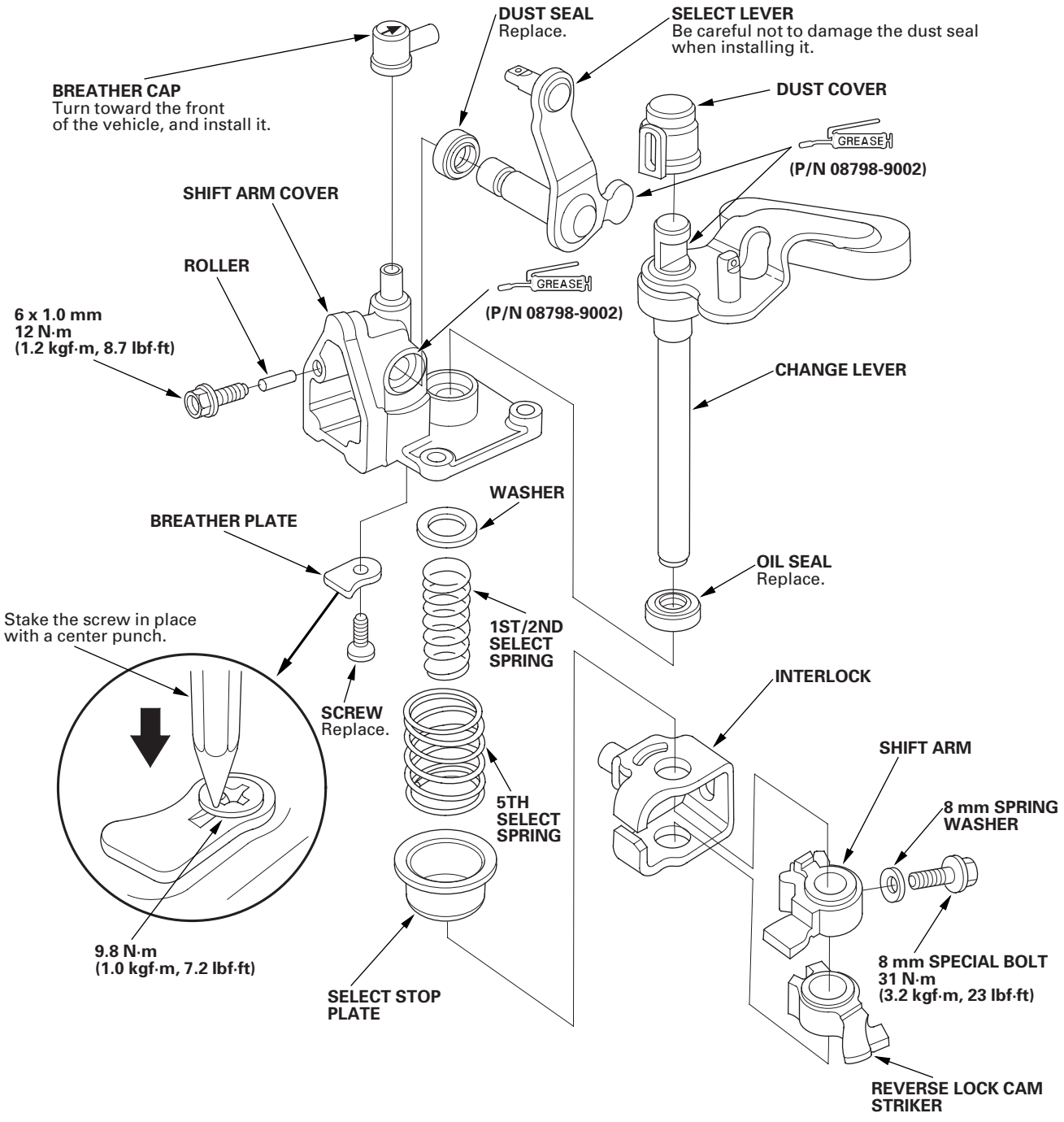

6-speed model:

NOTE:
- Do not assemble the shift arm cover if too much time has passed after applying the liquid gasket (for P/N 08718-0002, no more than 4 minutes, for all others, no more than 5 minutes). Instead, remove the old residue and reapply the liquid gasket.
- Prior to reassembling, clean all parts in solvent, dry them, and apply grease to the contact surfaces as shown.

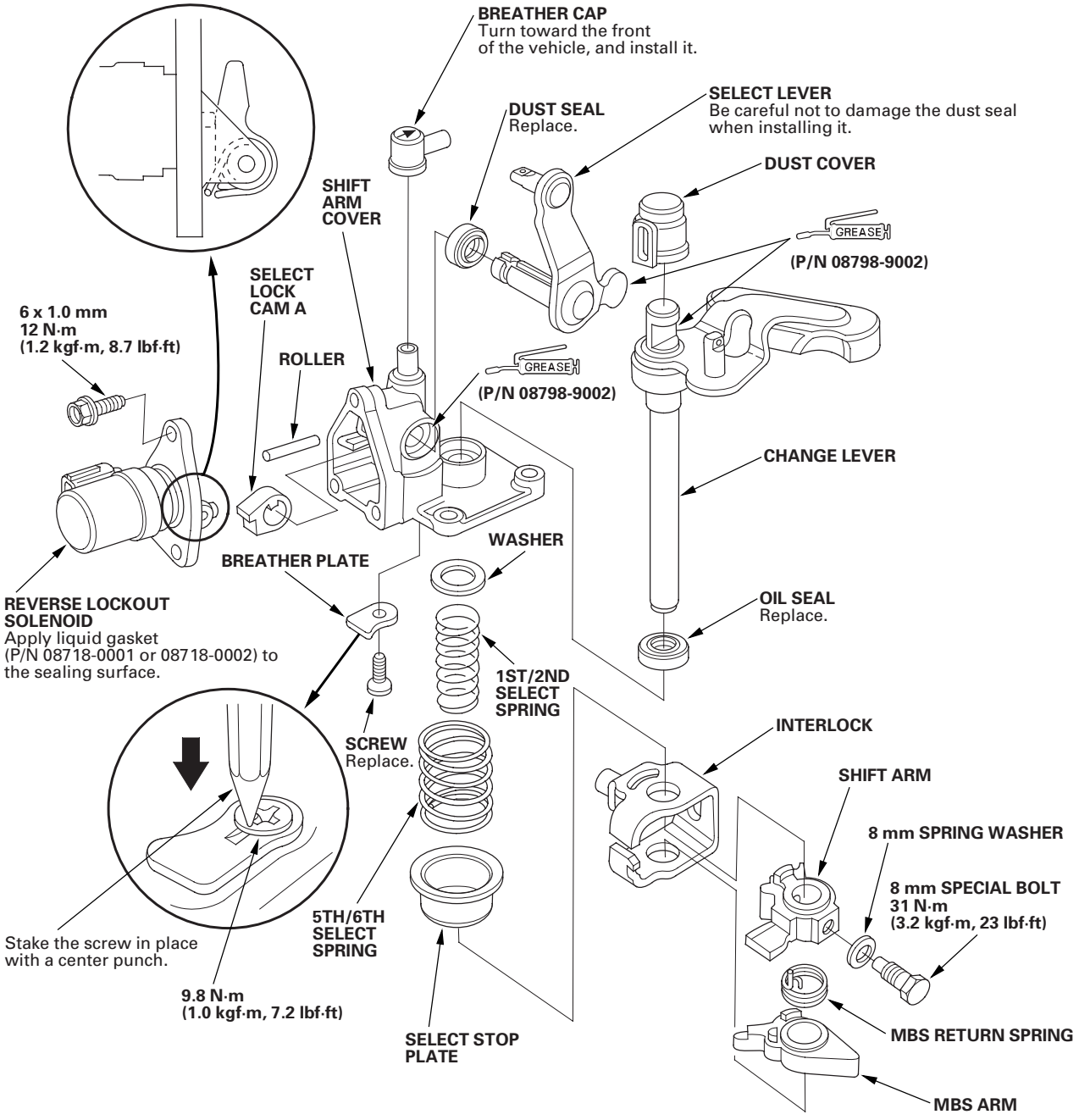

Shift Fork Clearance Inspection

NOTE: The synchro sleeve and synchro hub should be replaced as a set.

1. Measure the clearance between each shift fork (A) and its matching synchro sleeve (B). If the clearance exceeds the service limit, go to step 2.

   Standard: 0.35—0.65 mm (0.014—0.026 in.)
   Service Limit: 1.0 mm (0.039 in.)

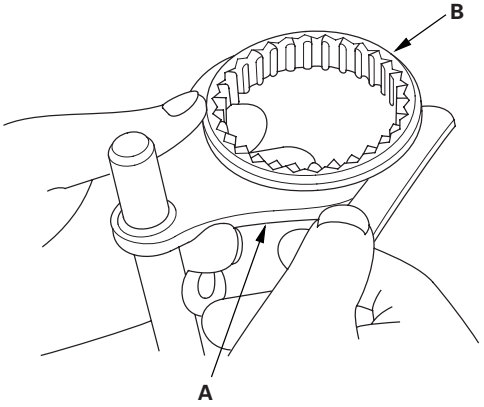

2. Measure the thickness of the shift fork fingers.

   - If the thickness is not within the standard, replace the shift fork.
   - If the thickness is within the standard, replace the synchro sleeve.
   - If one arm of the shift fork shows more wear than others, the fork may be bent and needs to be replaced.

   Standard: 7.4—7.6 mm (0.29—0.30 in.)

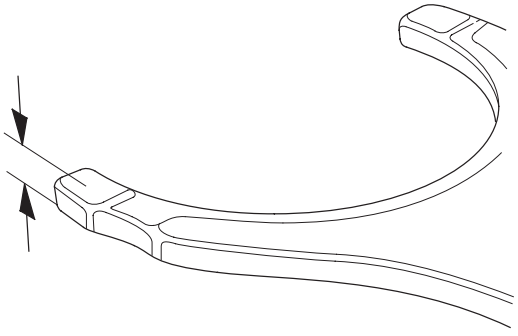

3. Measure the clearance between the shift fork (A) and the shift arm (B). If the clearance exceeds the service limit, go to step 4.

   Standard: 0.2—0.5 mm (0.007—0.020 in.)
   Service Limit: 0.62 mm (0.024 in.)

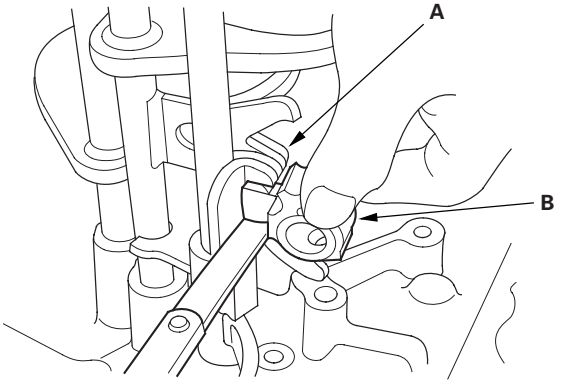

NOTE: 6-speed model is shown.

4. Measure the width of the shift arm.

   - If the width is not within the standard, replace the shift arm.
   - If the width is within the standard, replace the shift fork or shift piece.

   Standard: 16.9—17.0 mm (0.665—0.669 in.)

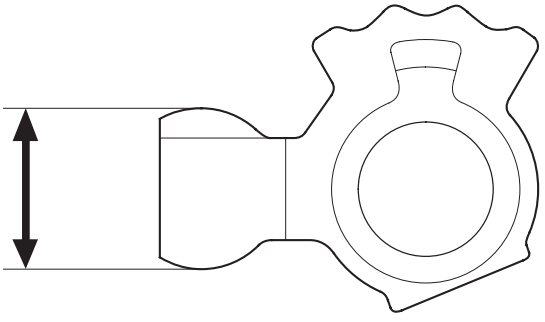

Shift Fork Disassembly/Reassembly

Prior to reassembling, clean all the parts in solvent, dry them, and apply lubricant to all contact surfaces.

5-speed model:

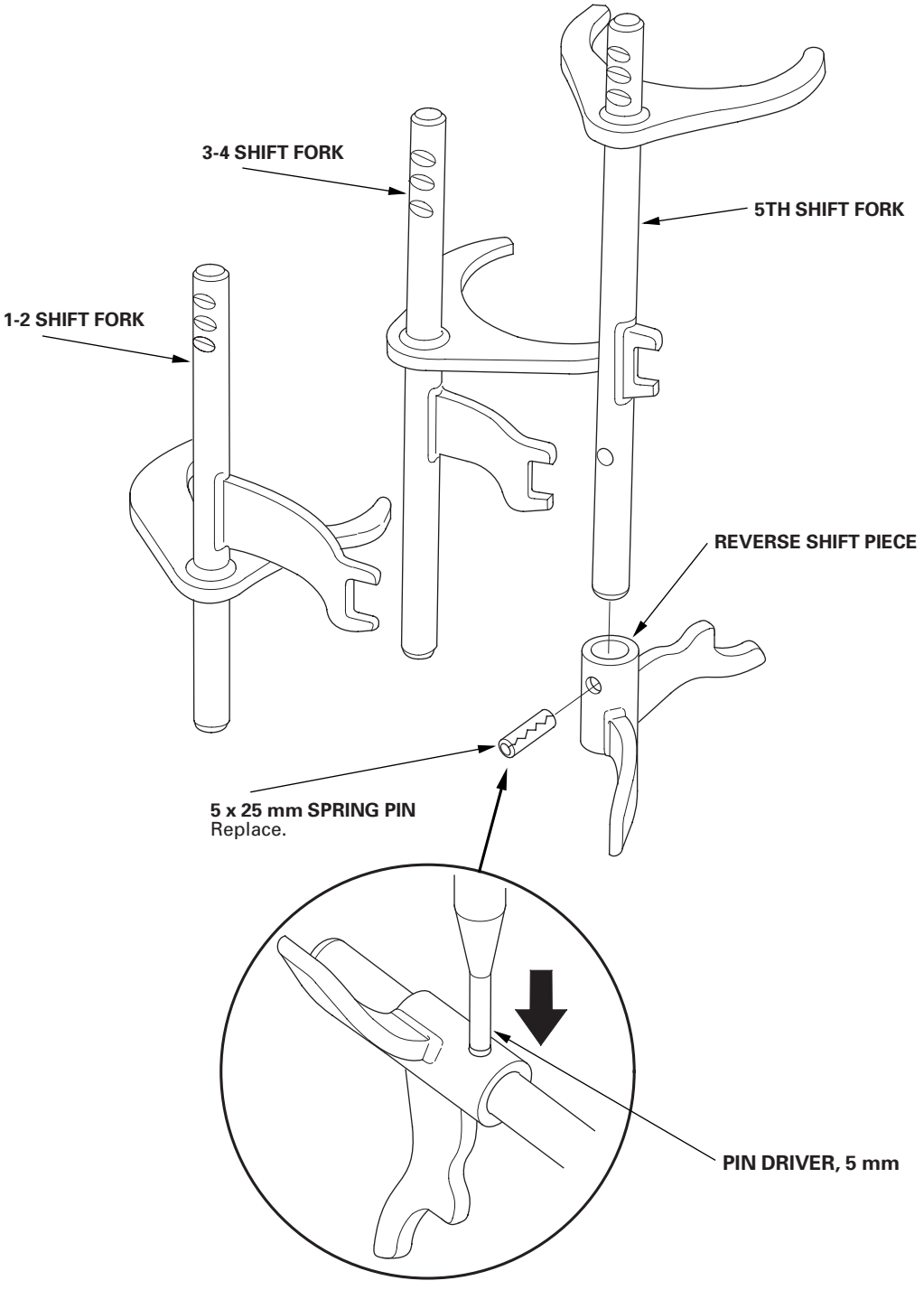

(cont'd)

Shift Fork Disassembly/Reassembly (cont'd)

6-speed model:

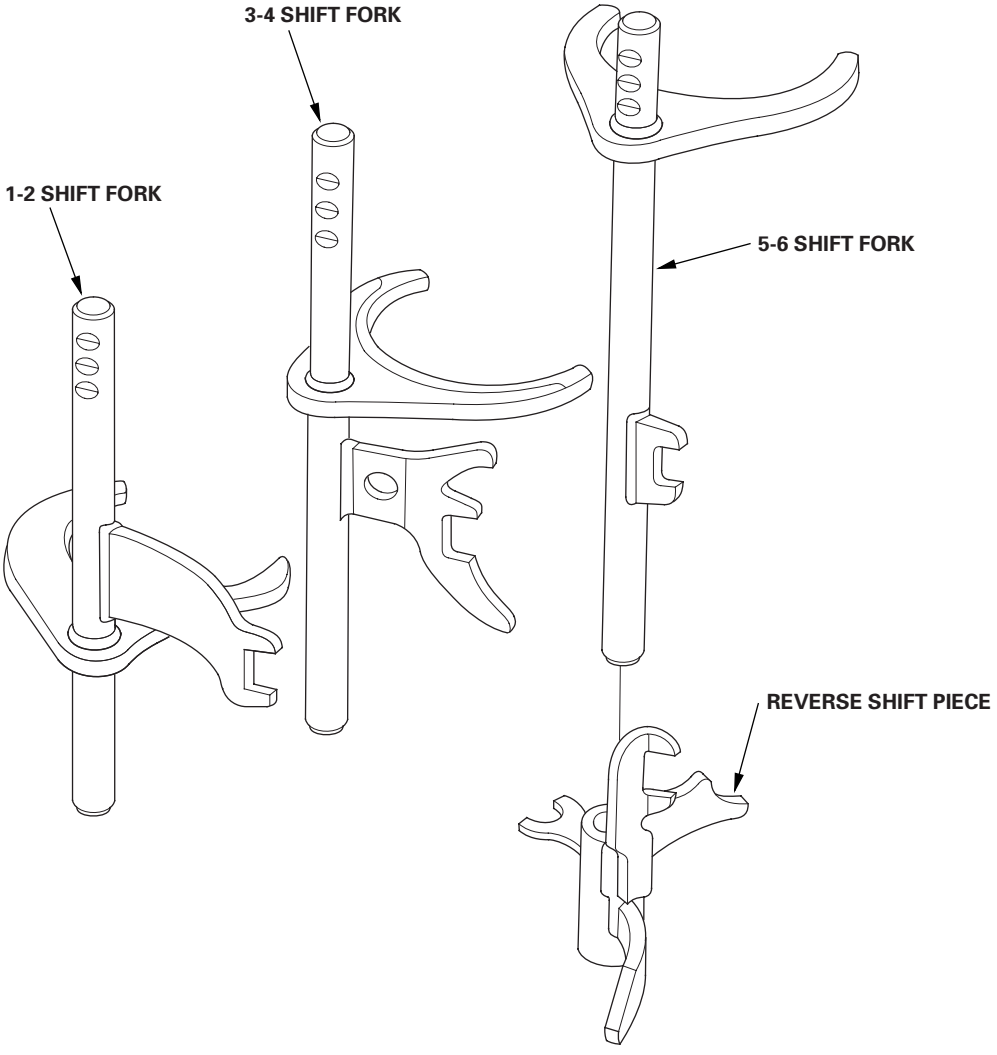

Mainshaft Assembly Clearance Inspection

NOTE:
- If replacement is required, always replace the synchro sleeve and hub as a set.
- 6-speed model is shown, 5-speed model is similar.

1. Support the bearing inner race with an appropriate sized socket (A), and push down on the mainshaft (B).

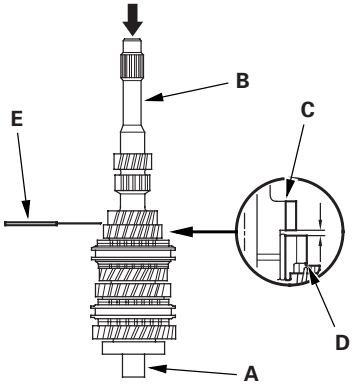

2. Measure the clearance between 2nd (C) and 3rd (D) gears with a feeler gauge (E).

   - If the clearance is more than the service limit, go to step 3.
   - If the clearance is within the service limit, go to step 4.

   Standard: 0.06—0.16 mm (0.002—0.006 in.)
   Service Limit: 0.25 mm (0.010 in.)

3. Measure the thickness of 3rd gear.

   - If the thickness is less than the service limit, replace 3rd gear.
   - If the thickness is within the service limit, replace the 3rd/4th synchro hub.

   Standard: 23.92—23.97 mm (0.941—0.944 in.)
   Service Limit: 23.80 mm (0.937 in.)

   5-speed model:

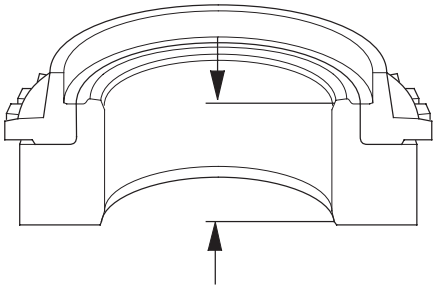

   6-speed model:

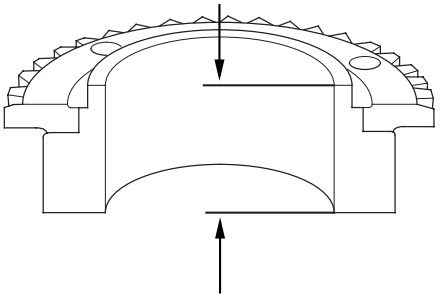

(cont'd)

Mainshaft Assembly Clearance Inspection (cont'd)

4. Measure the clearance between 4th gear (A) and the distance collar (B) with a dial indicator (C). If the clearance is more than the service limit, go to step 5.

   Standard: 0.06—0.16 mm (0.002—0.006 in.)
   Service Limit: 0.25 mm (0.010 in.)

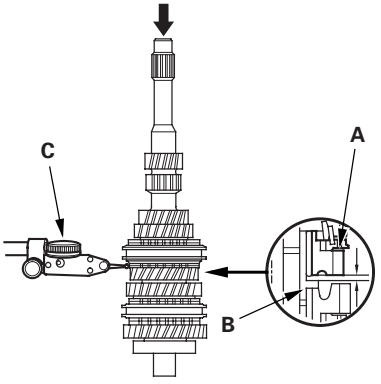

5. Measure distance ① on the distance collar.

   - If distance ① is not within the standard, replace the distance collar.
   - If distance ① is within the standard, go to step 6.

   Standard: 24.03—24.08 mm (0.946—0.948 in.)

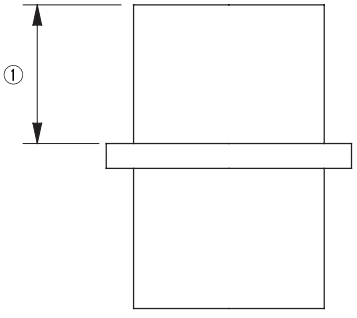

6. Measure the thickness of 4th gear.

   - If the thickness is less than the service limit, replace 4th gear.
   - If the thickness is within the service limit, replace the 3rd/4th synchro hub.

   Standard: 23.92—23.97 mm (0.941—0.944 in.)
   Service Limit: 23.80 mm (0.937 in.)

   5-speed model:

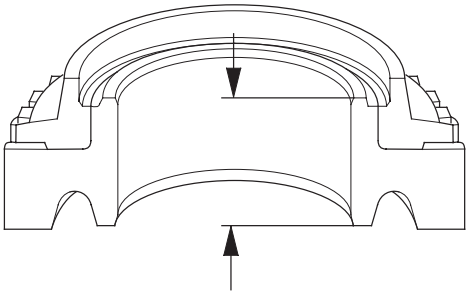

   6-speed model:

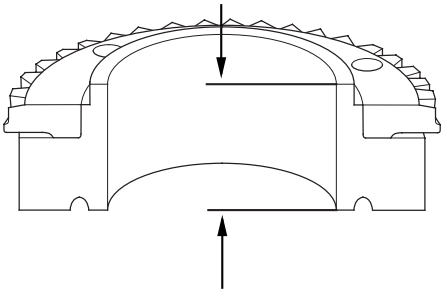

7. Measure the clearance between the distance collar (A) and 5th gear (B) with a dial indicator (C). If the clearance is more than the service limit, go to step 8.

Standard: 0.06—0.16 mm (0.002—0.006 in.)
Service Limit: 0.25 mm (0.010 in.)

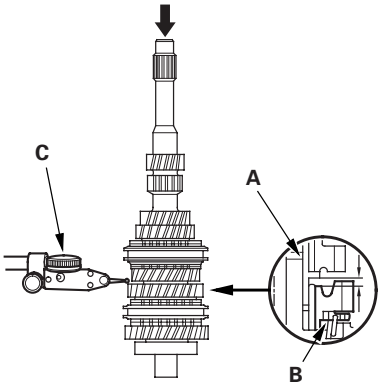

8. Measure distance ② on the distance collar.

- If distance ② is not within the standard, replace the distance collar.
- If distance ② is within the standard, go to step 9.

Standard: 24.03—24.08 mm (0.946—0.948 in.)

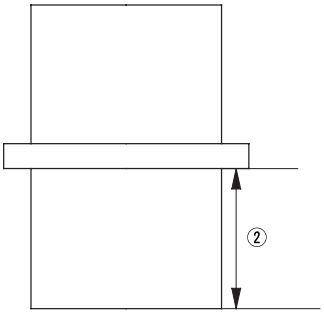

9. Measure the thickness of 5th gear.

- If the thickness is less than the service limit, replace 5th gear.
- If the thickness is within the service limit, replace the 5th synchro hub (5-spped model) or 5th/6th synchro hub (6-spped model).

Standard: 23.92—23.97 mm (0.941—0.944 in.)
Service Limit: 23.80 mm (0.937 in.)

5-speed model:

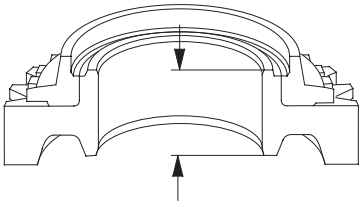

2002-2003 6-speed models, and 2004 6-speed model: X2M5 Transmission Number: 3000001-3004679:

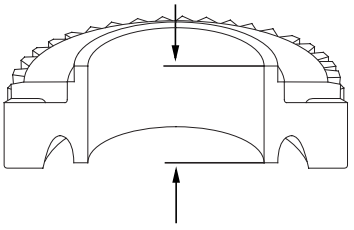

2004 6-speed model: X2M5 Transmission Number: 3004680 or later, and 2005-2006 6-speed models:

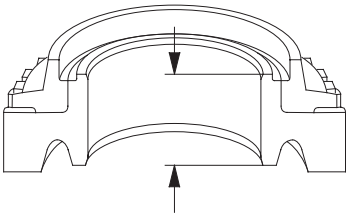

(cont'd)

Mainshaft Assembly Clearance Inspection (cont'd)

10. 5-speed model: Measure the thickness of the MBS distance collar. If the thickness is not within standard, replace the MBS distance collar.

    Standard: 23.95—24.05 mm (0.943—0.947 in.)

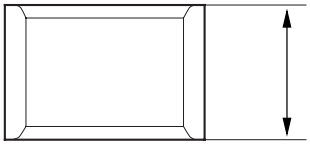

11. 6-speed model: Measure the clearance between 6th gear (A) and the angular ball bearing (B) with a feeler gauge (C). If the clearance is more than the service limit, go to step 12.

    Standard: 0.06—0.16 mm (0.002—0.006 in.)
    Service Limit: 0.25 mm (0.010 in.)

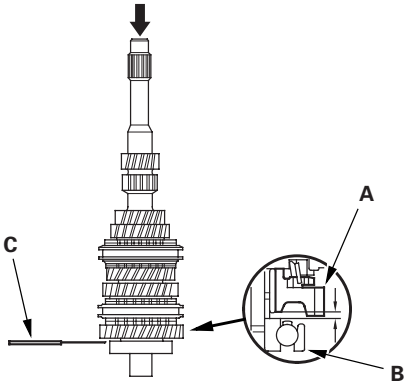

12. 6-speed model: Measure the thickness of the distance collar.

    - If the thickness is not within the standard, replace the distance collar.
    - If the thickness is within the standard, go to step 13.

    Standard: 24.03—24.08 mm (0.946—0.948 in.)

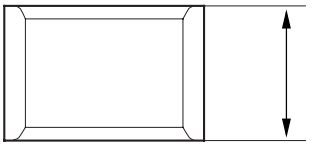

13. 6-speed model: Measure the thickness of 6th gear.

- If the thickness is less than the service limit, replace 6th gear.
- If the thickness is within the service limit, replace the 5th/6th synchro hub.

Standard: 23.92—23.97 mm (0.941—0.944 in.)
Service Limit: 23.80 mm (0.937 in.)

2002-2003 6-speed models, and 2004 6-speed model: X2M5 Transmission Number: 3000001-3004679:

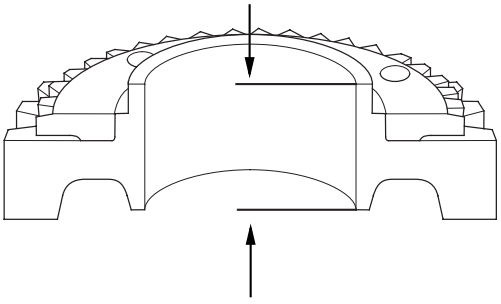

2004 6-speed model: X2M5 Transmission Number: 3004680 or later, and 2005-2006 6-speed models:

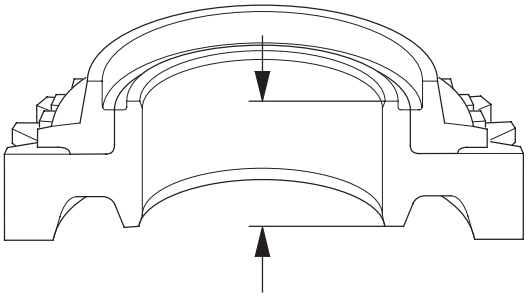

Mainshaft Disassembly

NOTE: 6-speed model is shown, 5-speed model is similar.

1. Remove the angular ball bearing (A) and the tapered cone ring using a commercially available bearing separator (B) and bearing puller (C). Make sure the bearing separator is under the tapered cone ring (5-speed model).

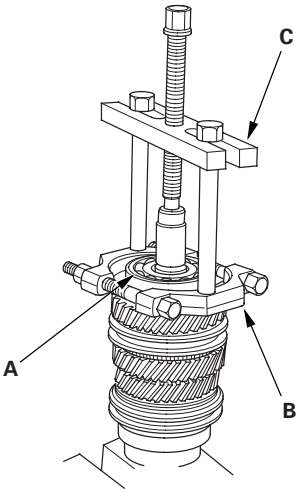

2. Support 5th gear (A) on steel blocks, and press the mainshaft out of the 5th syncro hub (5-speed model) or 5th/6th synchro hub (6-speed model) (B). Use of a jaw-type puller can damage the gear teeth.

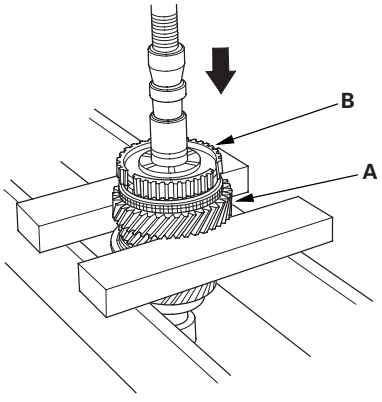

3. Support 3rd gear (A) on steel blocks, and press the mainshaft out of the 3rd/4th synchro hub (B). Use of a jaw-type puller can damage the gear teeth.

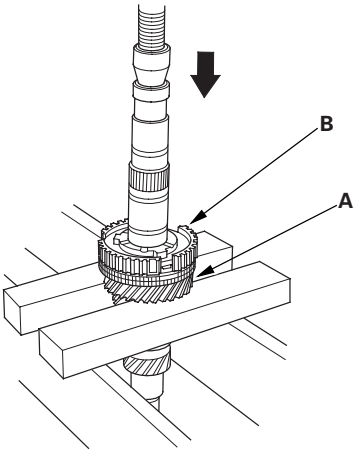

Mainshaft Inspection

1. Inspect the gear and bearing surfaces for wear and damage, then measure the mainshaft at points A, B, C, D, and E. If any part of the mainshaft is less than the service limit, replace it.

   Standard:
   A Ball bearing surface (transmission housing side):
   27.987—28.000 mm (1.1019—1.1024 in.)
   B Distance collar surface:
   31.984—32.000 mm (1.2594—1.2598 in.)
   C Needle bearing surface:
   38.984—39.000 mm (1.5348—1.5354 in.)
   D Ball bearing surface (clutch housing side):
   27.977—27.990 mm (1.1015—1.1020 in.)
   E Bushing surface:
   20.80—20.85 mm (0.819—0.821 in.)
   Service Limit:
   A: 27.93 mm (1.100 in.)
   B: 31.93 mm (1.257 in.)
   C: 38.93 mm (1.533 in.)
   D: 27.92 mm (1.099 in.)
   E: 20.75 mm (0.817 in.)

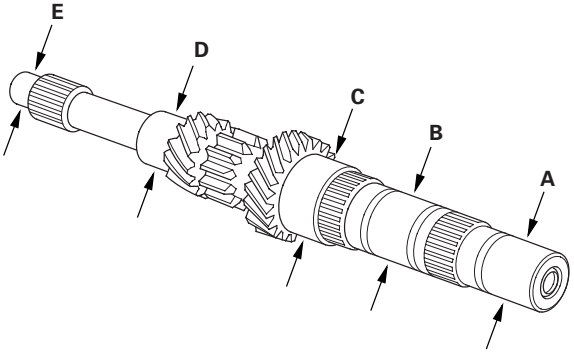

2. Inspect the runout by supporting both ends of the mainshaft. Then rotate mainshaft two complete turns while measuring with a dial gauge. If the runout is more than the service limit, replace the mainshaft.

   Standard: 0.02 mm (0.001 in.) max.
   Service Limit: 0.05 mm (0.002 in.)

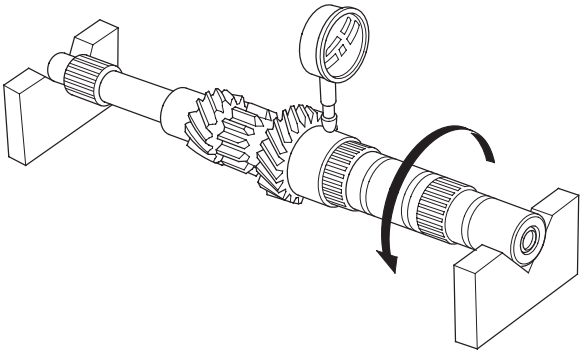

Mainshaft Reassembly

Exploded View

5-speed model:

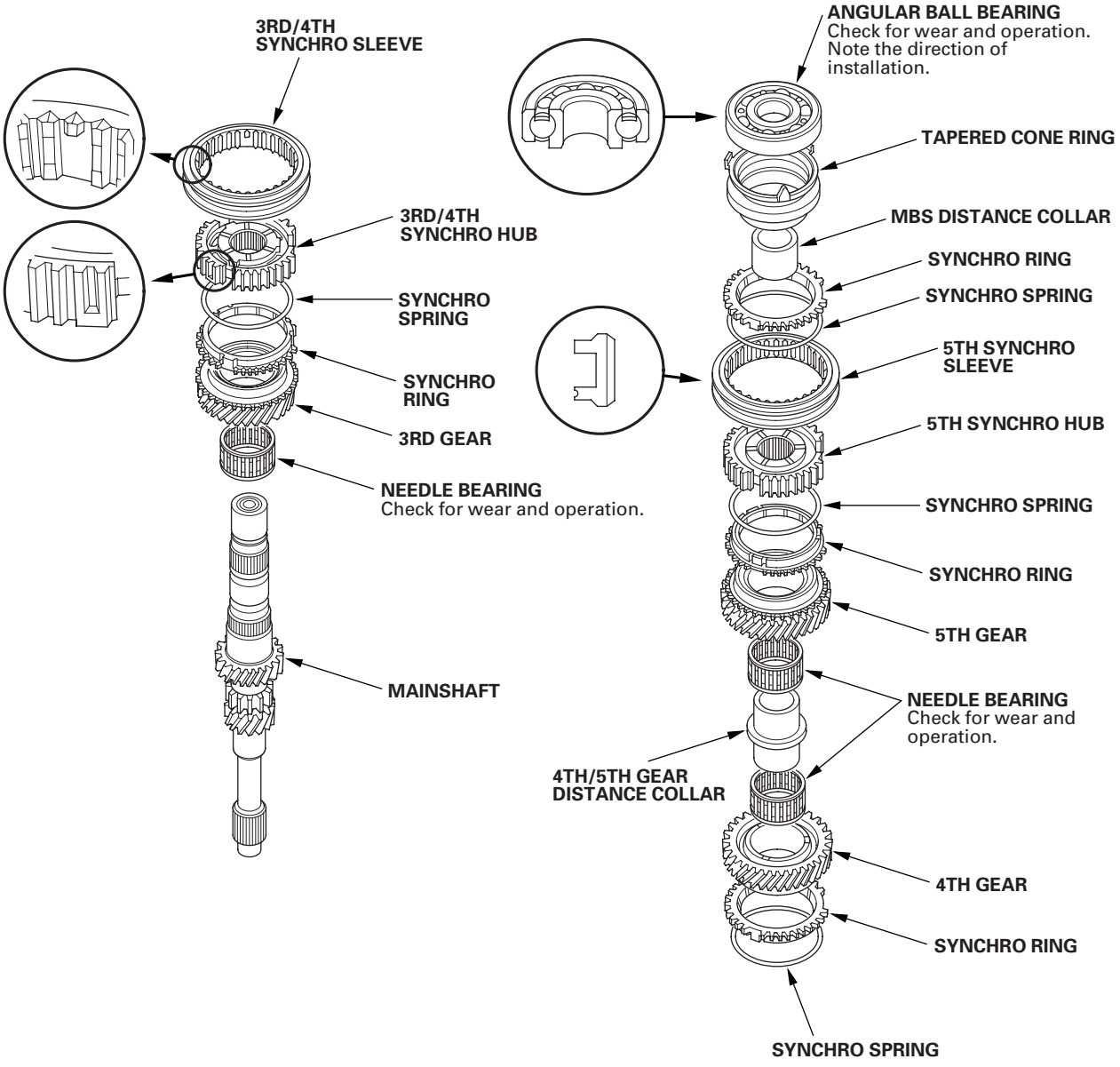

2002-2003 6-speed models, and 2004 6-speed model: X2M5 Transmission Number: 3000001-3004679

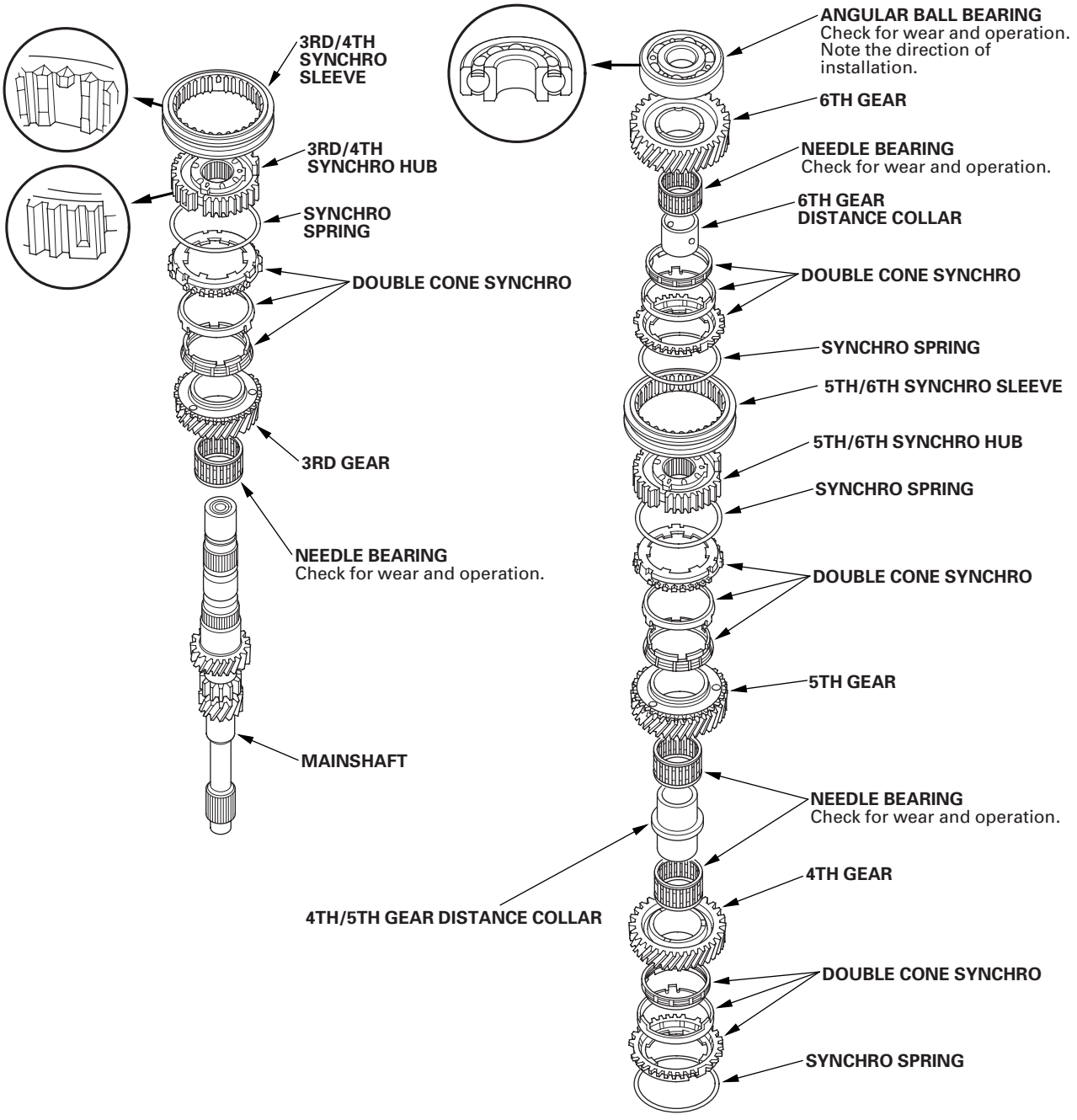

(cont'd)

Mainshaft Reassembly (cont'd)

Exploded View

2004 6-speed model: X2M5 Transmission Number: 3004680 or later, and 2005-2006 speed models:

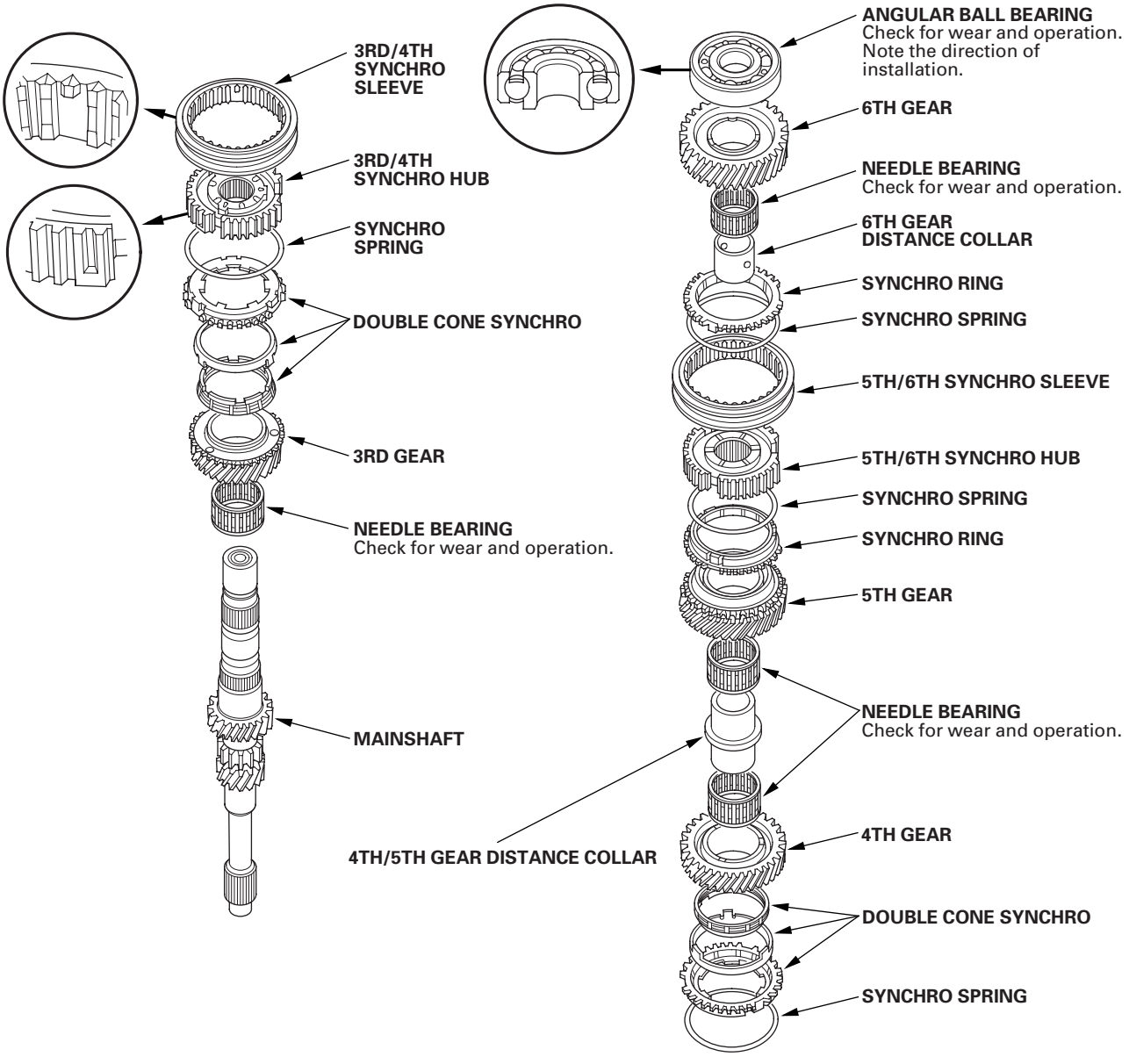

Special Tools Required
• Driver, 40 mm I.D. 07746-0030100
• Driver attachment, 30 mm I.D. 07746-0030300

NOTE: Refer to the Exploded View as needed during this procedure.

1. Clean all the parts in solvent, dry them, and apply lubricant to all contact surfaces except the 3rd/4th and 5th synchro hubs.

2. Install the needle bearing and 3rd gear on the mainshaft.

3. 5-speed model: Install the synchro ring (A) and the synchro spring (B).

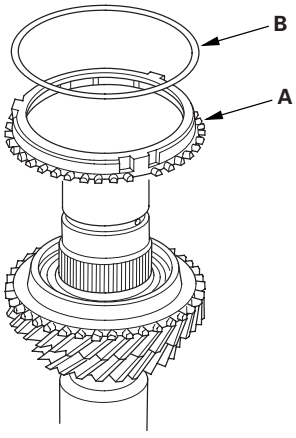

4. 6-speed model: Install the double cone synchro assembly (A) by aligning the synchro cone fingers (B) with the holes in 3rd gear (C), then install the synchro spring (D).

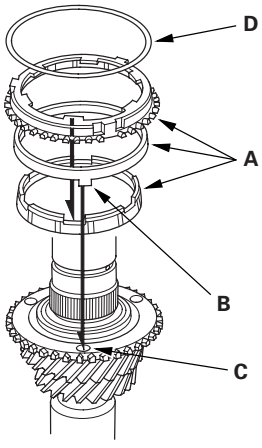

5. Install the 3rd/4th synchro hub (A) by aligning the synchro ring grooves (B) with the fingers in the 3rd/4th synchro hub (C).

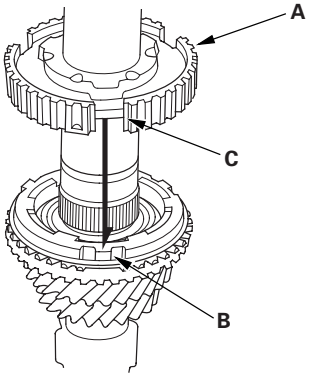

6. Install the 3rd/4th synchro hub (A) using the special tool.

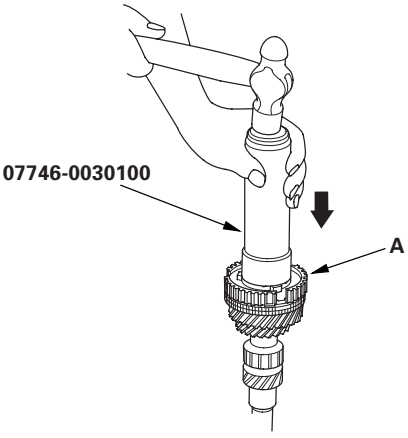

(cont'd)

Mainshaft Reassembly (cont'd)

7. Install the 3rd/4th synchro sleeve (A) by aligning the stops (B) with the 3rd/4th synchro sleeve and hub. After installing, check the operation of the 3rd/4th synchro hub set.

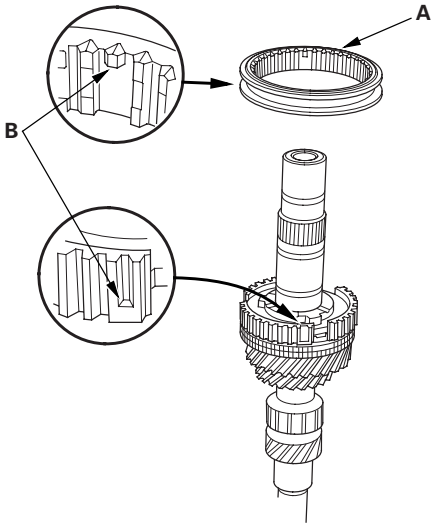

8. Install the synchro spring (A).

5-speed model:

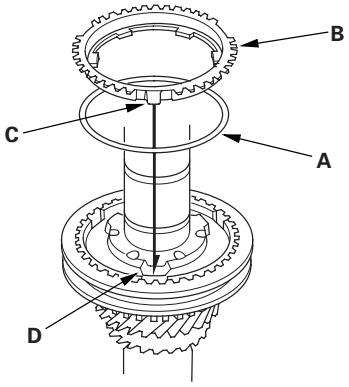

6-speed model:

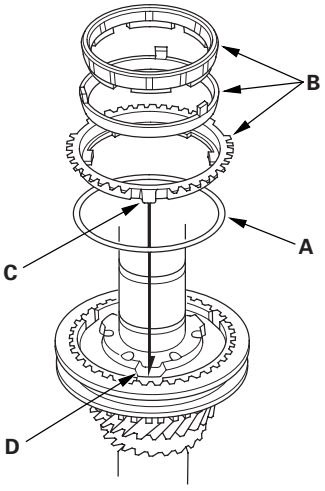

9. Install the syncro ring (B) (5-speed model) or the double cone synchro assembly (B) (6-speed model) by aligning the synchro ring fingers (C) with the grooves in the 3rd/4th synchro hub (D).

10. 5-speed model: Install 4th gear (A).

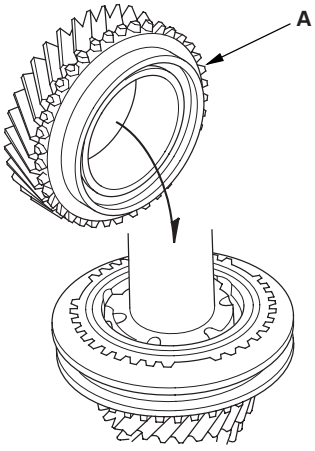

11. 6-speed model: Install 4th gear (A) by aligning the synchro cone fingers (B) with the holes in 4th gear (C).

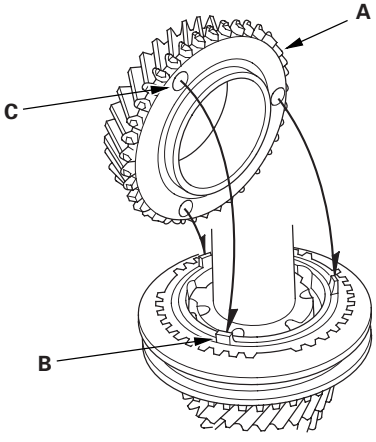

12. Install the needle bearings, the distance collar, and 5th gear.

13. 5-speed model, 2004 6-speed model: X2M5 Transmission Number: 3004680 or later, and 2005-2006 6-speed models: Install the syncro ring (A) and syncro spring (B).

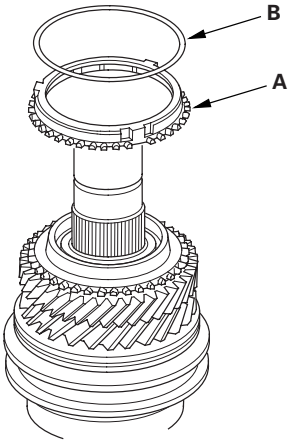

14. 2002-2003 6-speed models, and 2004 6-speed model: X2M5 Transmission Number: 3000001-3004679: Install the double cone synchro assembly (A) by aligning the synchro cone fingers (B) with the holes in 5th gear (C), then install the synchro spring (D).

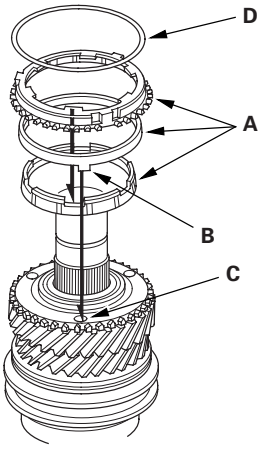

(cont'd)

Mainshaft Reassembly (cont'd)

15. Install the 5th synchro hub (A) by aligning the synchro ring grooves (B) with the fingers in the 5th synchro hub (C).

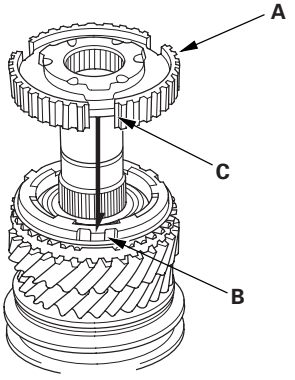

16. Install the 5th synchro hub (A) using the special tools.

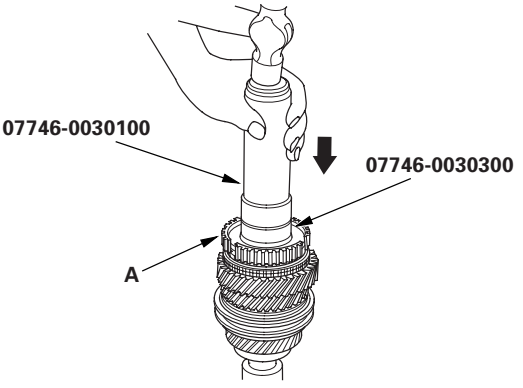

17. 5-speed model: Install the 5th synchro sleeve.

18. 6-speed model: Install the 5th/6th synchro sleeve.

19. 5-speed model, and 2004 6-speed model: X2M5 Transmission Number: 3004680 or later, 2005-2006 6-speed models: Install the synchro spring (A). Install the synchro ring (B) by aligning the synchro cone fingers (C) with the grooves in the 5th synchro hub (5-speed model) or 5th/6th synchro hub (6-speed model) (D).

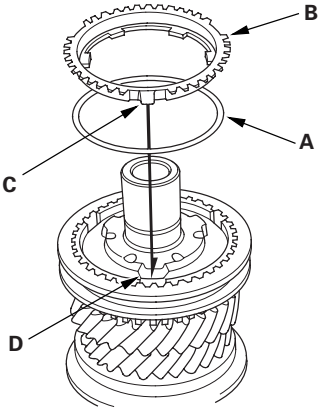

20. 2002-2003 6-speed models, and 2004 6-speed model: X2M5 Transmission Number: 3000001-3004679: Install the synchro spring (A). Install the double cone synchro assembly (B) by aligning the synchro ring fingers (C) with the grooves in the 5th/6th synchro hub (D).

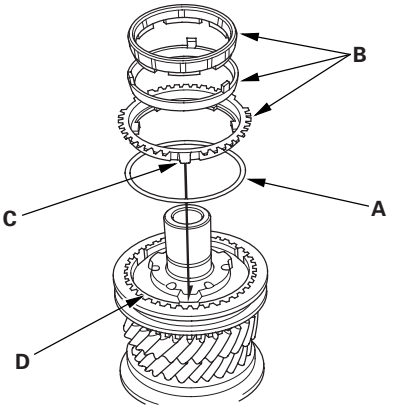

21. 5-speed model: Install the MBS distance collar and tapered cone ring.

22. 6-speed model: Install the distance collar and the needle bearing.

23. 2002-2003 6-speed models, and 2004 6-speed model: X2M5 Transmission Number 3000001-3004679: Install 6th gear (A) by aligning the synchro cone fingers (B) with the holes in 6th gear (C).

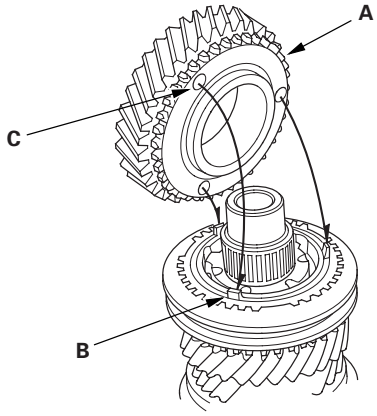

24. 2004 6-speed model: X2M5 Transmission Number: 3004680 or later, and 2005-2006 6-speed models: Install the 6th gear (A).

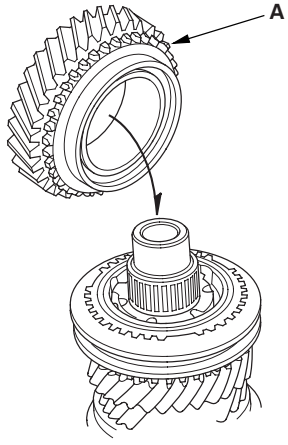

25. Install the new ball bearing (A) using the special tools and a press (B).

5-speed model:

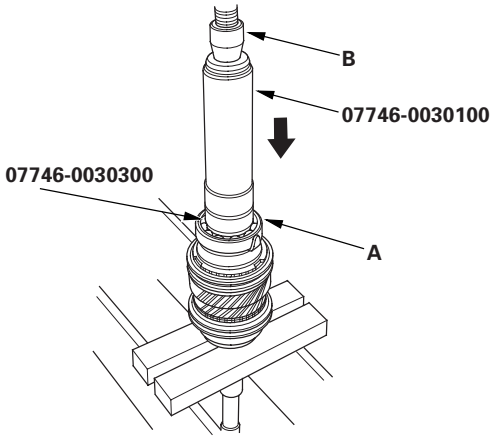

6-speed model:

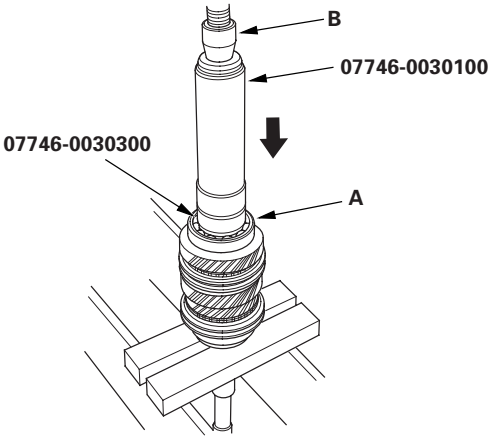

Countershaft Assembly Clearance Inspection

NOTE: 6-speed model is shown, 5-speed model is similar.

1. Measure the clearance between 1st gear (A) and the distance collar (B) with a feeler gauge (C). If the clearance is more than the service limit, go to step 2.

   Standard: 0.06—0.16 mm (0.002—0.006 in.)
   Service Limit: 0.25 mm (0.010 in.)

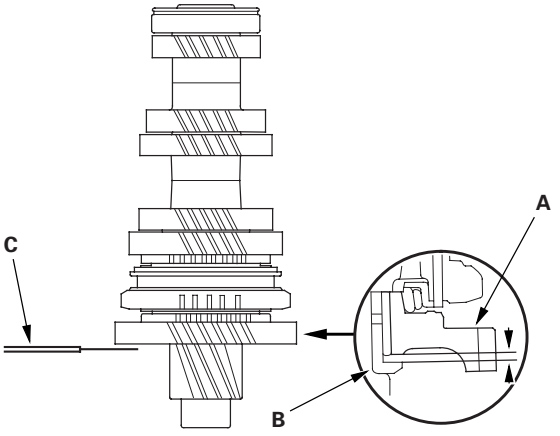

2. Measure the thickness of the distance collar.

   - If the thickness is not within the standard, replace the distance collar.
   - If the thickness is within the standard, go to step 3.

   Standard: 23.03—23.08 mm (0.907—0.909 in.)

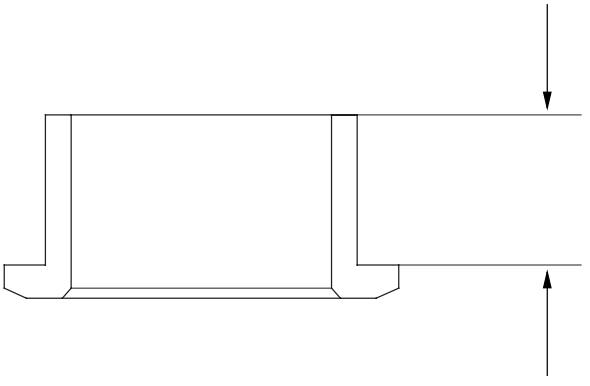

3. Measure the thickness of 1st gear.

   - If the thickness is less than the service limit, replace 1st gear.
   - If the thickness is within the service limit, replace the 1st/2nd synchro hub.

   Standard: 22.92—22.97 mm (0.902—0.904 in.)
   Service Limit: 22.87 mm (0.900 in.)

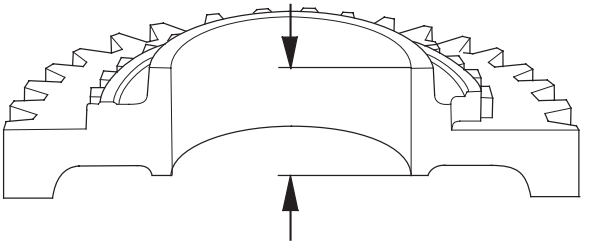

4. Measure the clearance between 2nd gear (A) and 3rd gear (B) with a feeler gauge (C). If the clearance is more than the service limit, go to step 5.

   Standard: 0.06—0.16 mm (0.002—0.006 in.)
   Service Limit: 0.25 mm (0.010 in.)

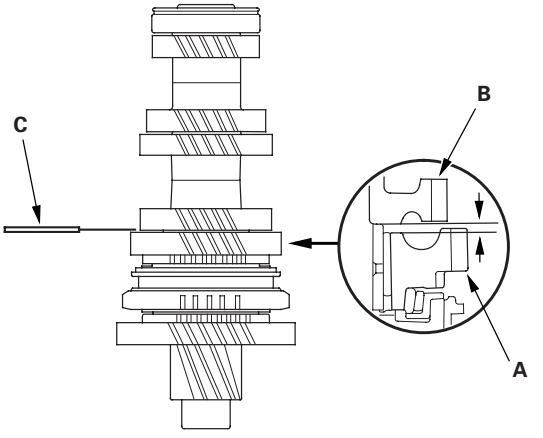

5. Measure the thickness of the distance collar.

- If the thickness is not within the standard, replace the distance collar.
- If the thickness is within the standard, go to step 6.

Standard: 28.03—28.08 mm (1.104—1.106 in.)

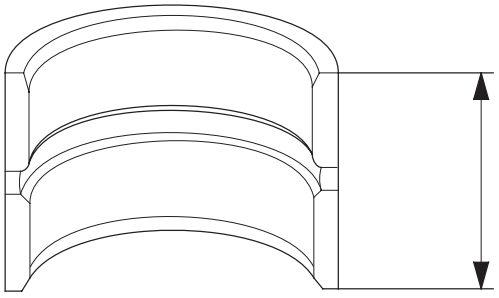

6. Measure the thickness of 2nd gear.

- If the thickness is less than the service limit, replace 2nd gear.
- If the thickness is within the service limit, replace the 1st/2nd synchro hub.

Standard: 27.92—27.97 mm (1.099—1.101 in.)
Service Limit: 27.87 mm (1.097 in.)

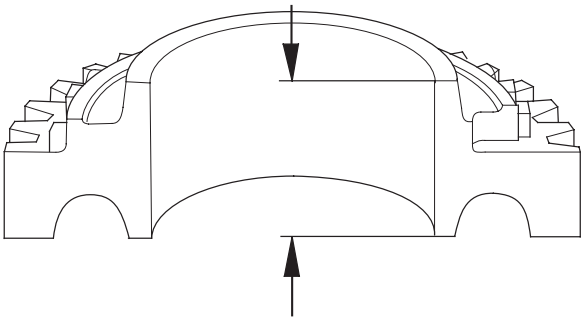

Countershaft Disassembly

NOTE: 6-speed model is shown, 5-speed model is similar.

1. Securely clamp the countershaft assembly in a bench vise with wood blocks.

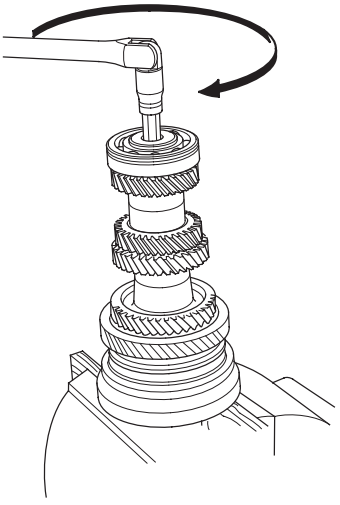

2. Remove the special bolt (left-hand threads).

3. Support the ball bearing (A) (5-speed model) or 6th gear (B) (6-speed model) on steel blocks (C), then use a press (D) and an attachment (E) to press the countershaft out of the ball bearing.

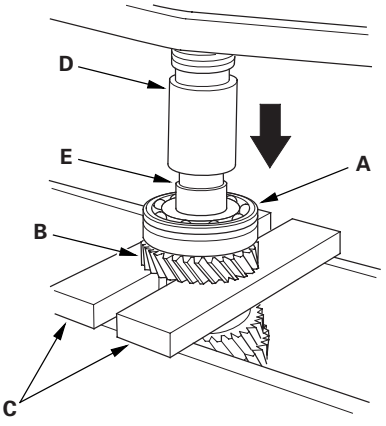

4. 5-speed model: Remove the 35 mm shim and the distance collar.

5. Support 4th gear (A) on steel blocks (B), then use a press (C) and an attachment (D) to press the countershaft (E) out of 5th gear.

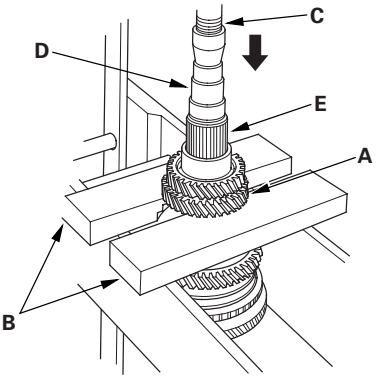

6. Support 2nd gear (A) on steel blocks (B), then use a press (C) and an attachment (D) to press the countershaft (E) out of 3rd gear.

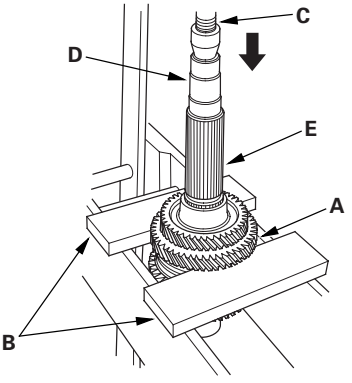

Countershaft Inspection

1. Inspect the gear and bearing surfaces for wear and damage, then measure the countershaft at points A, B, and C. If any part of the countershaft is less than the service limit, replace it.

   Standard:
   A Ball bearing surface (transmission housing side):
   30.020—30.033 mm (1.1819—1.1824 in.)
   B Distance collar surface:
   39.937-39.950 mm (1.5723-1.5728 in.)
   C Needle bearing surface (clutch housing side):
   5-speed model:
   40.000-40.015 mm (1.5748-1.5754 in.)
   6-speed model:
   35.000-35.015 mm (1.3780-1.3785 in.)
   Service Limit:
   A: 29.97 mm (1.180 in.)
   B: 39.883 mm (1.5702 in.)
   C: 5-speed model: 39.95 mm (1.5723 in.)
   6-speed model: 34.95 mm (1.3760 in.)

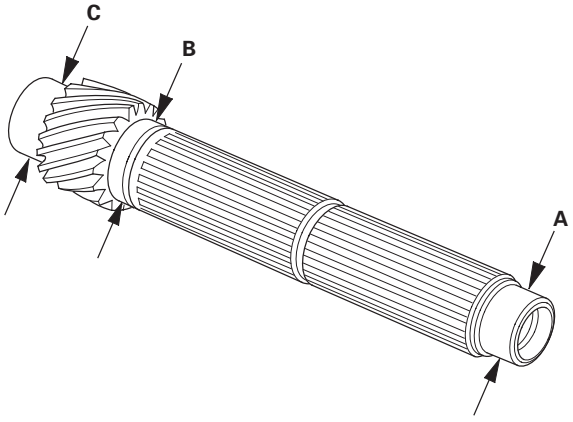

2. Inspect the runout by supporting both ends of the countershaft. Then rotate the countershaft two complete turns while measuring with a dial gauge. If the runout exceeds the service limit, replace the countershaft.

   Standard: 0.02 mm (0.001 in.) max.
   Service Limit: 0.05 mm (0.002 in.)

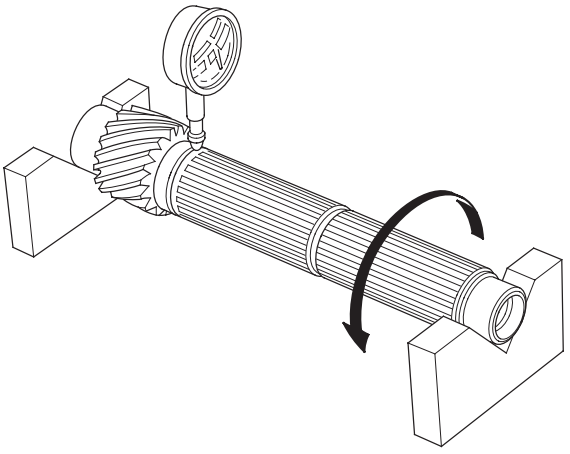

Countershaft Reassembly

Exploded View

5-speed model:

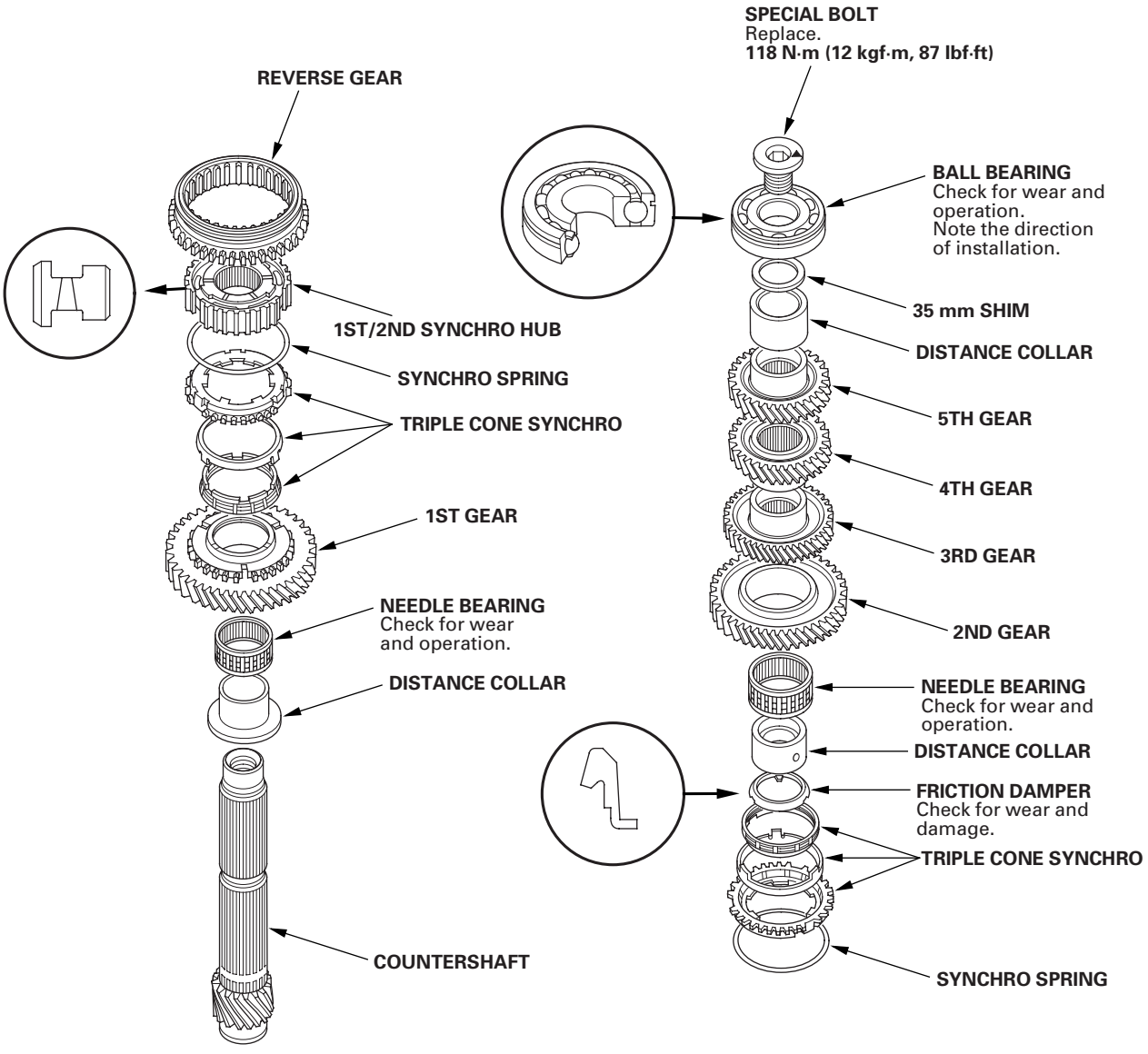

6-speed model:

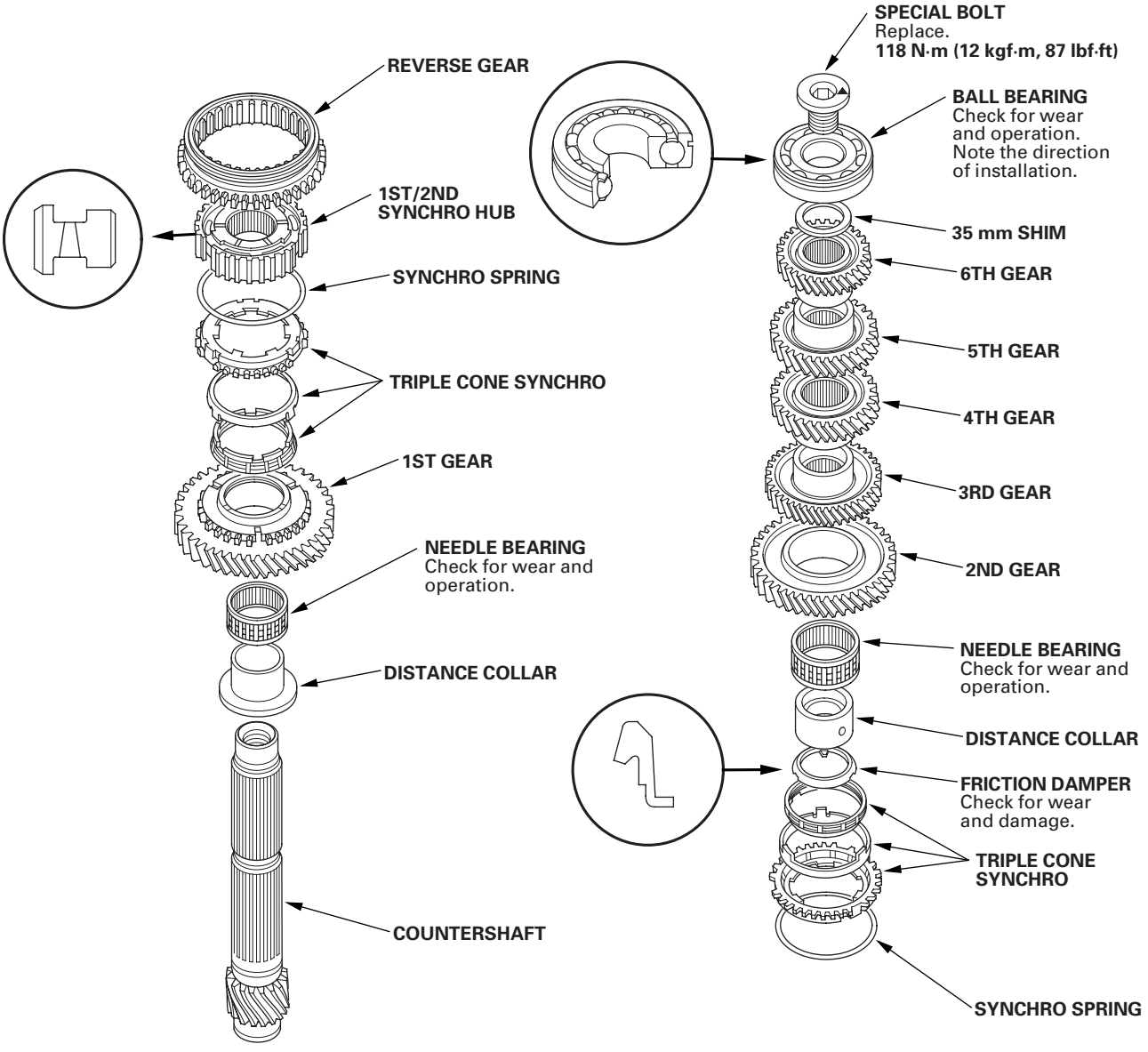

(cont'd)

Countershaft Reassembly (cont'd)

Special Tools Required
- Driver, 40 mm I.D. 07746-0030100
- Driver attachment, 30 mm I.D. 07746-0030300

NOTE:
- Refer to the Exploded View as needed during this procedure.
- 6-speed model is shown, 5-speed model is similar.

1. Clean all parts in solvent, dry them, and apply lubricant to all contact surfaces.

2. Install the distance collar, needle bearing, and 1st gear onto the countershaft.

3. Install the triple cone synchro assembly (A) by aligning the synchro cone fingers (B) with the grooves in 1st gear (C), then install the synchro spring (D).

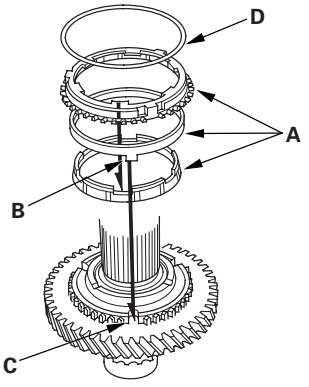

4. Install the 1st/2nd synchro hub (A) by aligning the synchro ring grooves (B) with the fingers in the 1st/2nd synchro hub (C).

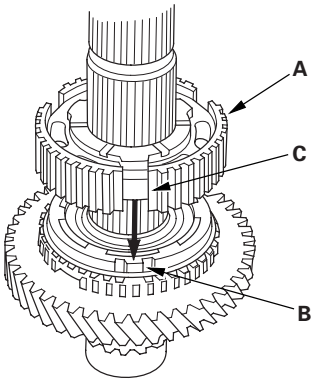

5. Install reverse gear.

6. Install the synchro spring (A).

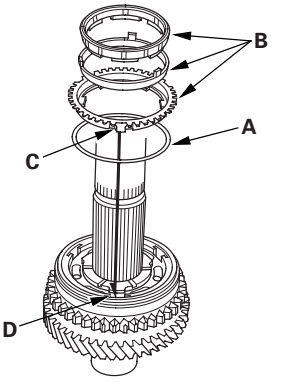

7. Install the triple cone synchro assembly (B) by aligning the synchro ring fingers (C) with the grooves in the 1st/2nd synchro hub (D).

8. Install the distance collar (A) and the friction damper (B) by aligning the friction damper fingers (C) with the grooves in the 1st/2nd synchro hub (D).

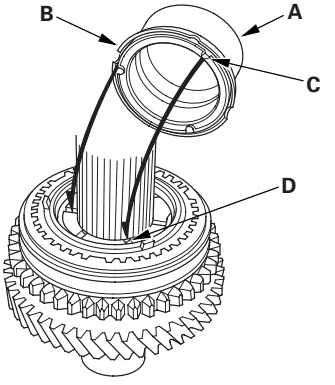

9. Install the needle bearing.

10. Install 2nd gear (A) by aligning the synchro cone fingers (B) with the grooves in 2nd gear (C).

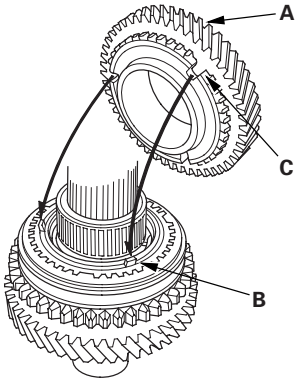

11. Support the countershaft (A) on the steel blocks, then install 3rd gear (B) using the special tool and a press (C). Do not exceed the maximum pressure.

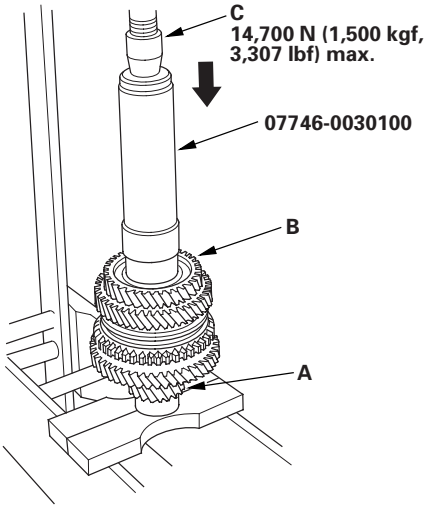

12. Install 4th gear (A) using the special tool and a press (B). Do not exceed the maximum pressure.

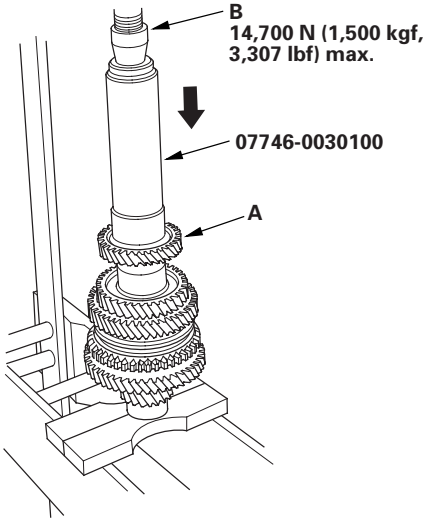

13. Install 5th gear (A) using the special tool and a press (B). Do not exceed the maximum pressure.

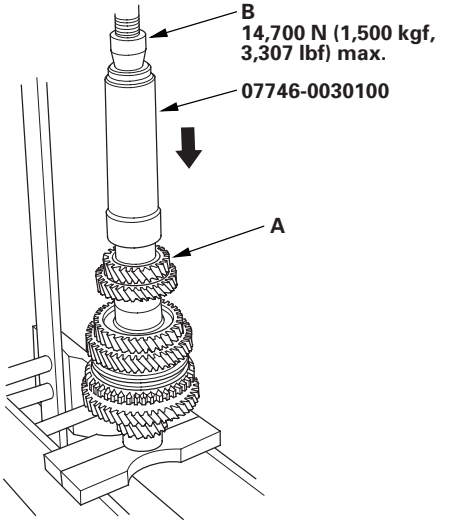

(cont'd)

Countershaft Reassembly (cont'd)

14. 5-speed model: Install the distance collar.

15. 6-speed model: Install 6th gear (A) using the special tools and a press (B). Do not exceed the maximum pressure.

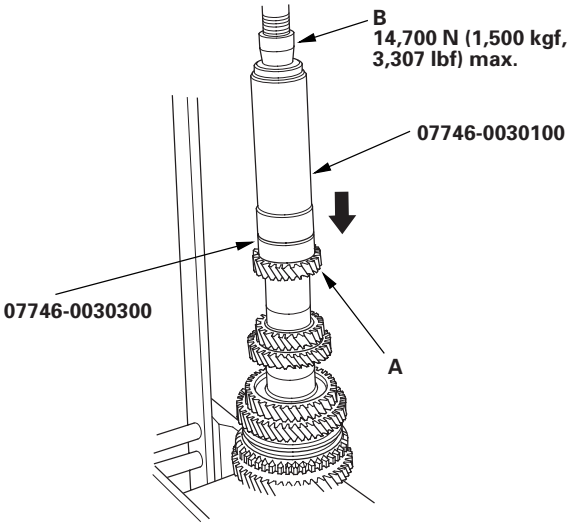

16. Install the 35 mm shim and the old ball bearing (A) using the special tools and a press (B).

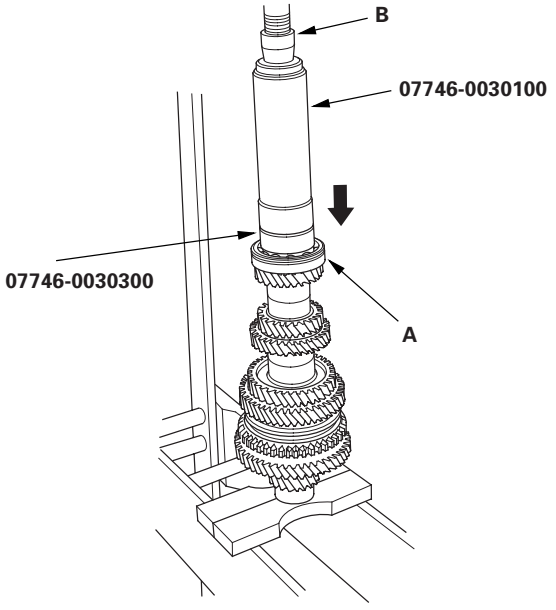

17. Measure the clearance between the old bearing (A) and the 35 mm shim (B) with a feeler gauge (C).

Standard: 0.04—0.10 mm (0.0016—0.0039 in.)

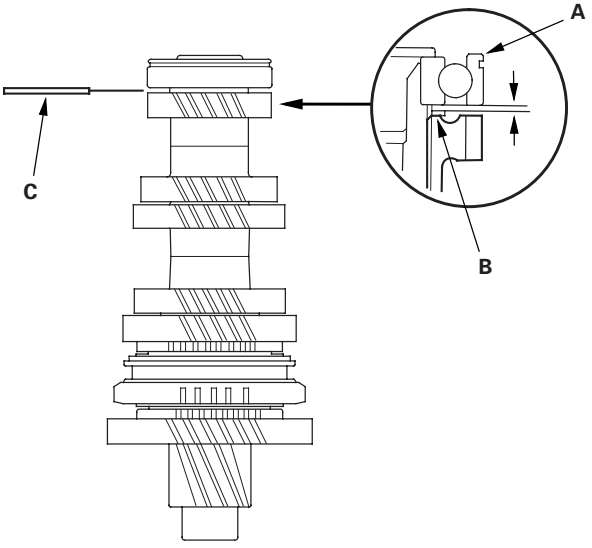

18. If the clearance is more than the standard, select a new shim from the following table. If the clearance measured in step 17 is within the standard, replace only the ball bearing.

35 mm Shim

	Part Number	Thickness
A	23981-PPP-000	0.87 mm (0.0343 in.)
AA	23981-PPP-900	0.91 mm (0.0358 in.)
B	23982-PPP-000	0.95 mm (0.0374 in.)
AB	23982-PPP-900	0.99 mm (0.0390 in.)
C	23983-PPP-000	1.03 mm (0.0406 in.)
AC	23983-PPP-900	1.07 mm (0.0421 in.)
D	23984-PPP-000	1.11 mm (0.0437 in.)
AD	23984-PPP-900	1.15 mm (0.0453 in.)
E	23985-PPP-000	1.19 mm (0.0469 in.)
AE	23985-PPP-900	1.23 mm (0.0484 in.)
F	23986-PPP-000	1.27 mm (0.0500 in.)
AF	23986-PPP-900	1.31 mm (0.0516 in.)
G	23987-PPP-000	1.35 mm (0.0531 in.)
AG	23987-PPP-900	1.39 mm (0.0547 in.)
H	23988-PPP-000	1.43 mm (0.0563 in.)
AH	23988-PPP-900	1.47 mm (0.0579 in.)
J	23989-PPP-000	1.51 mm (0.0594 in.)
AJ	23989-PPP-900	1.55 mm (0.0610 in.)
K	23990-PPP-000	1.59 mm (0.0626 in.)
AK	23990-PPP-900	1.63 mm (0.0642 in.)
L	23991-PPP-000	1.67 mm (0.0657 in.)
AL	23991-PPP-900	1.71 mm (0.0673 in.)
M	23992-PPP-000	1.75 mm (0.0689 in.)
AM	23992-PPP-900	1.79 mm (0.0705 in.)
N	23993-PPP-000	1.83 mm (0.0720 in.)
AN	23993-PPP-900	1.87 mm (0.0736 in.)
P	23994-PPP-000	1.91 mm (0.0752 in.)
AP	23994-PPP-900	1.95 mm (0.0768 in.)
Q	23995-PPP-000	1.99 mm (0.0783 in.)

19. Support the ball bearing (A) (5-speed model) or 6th gear (B) (6-speed model) on steel blocks (C), then use a press (D) and an attachment (E) to press the countershaft out of the ball bearing.

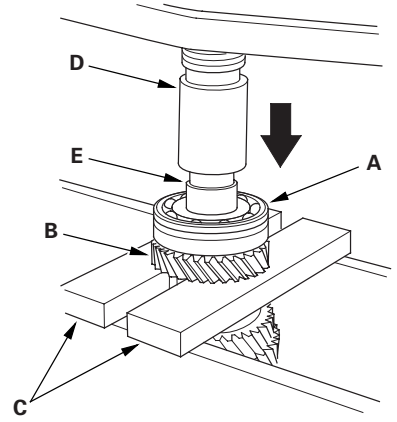

20. If necessary, install the 35 mm shim selected in step 18, then recheck the clearance.

21. 6-speed model: Install 6th gear (A) using the special tools and a press (B). Do not exceed the maximum pressure.

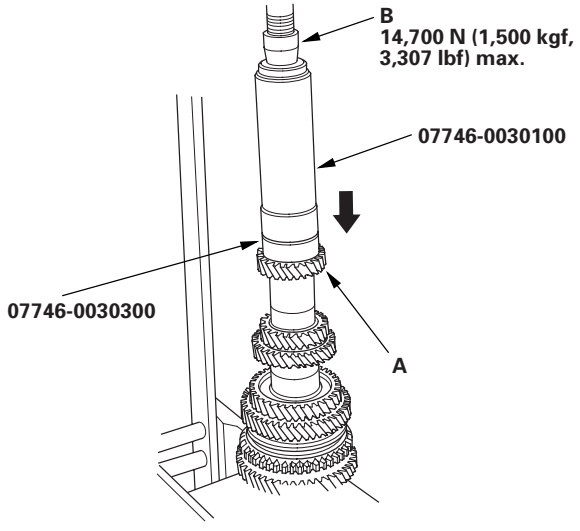

(cont'd)

Countershaft Reassembly (cont'd)

22. Install the new ball bearing (A) using the special tools and a press (B).

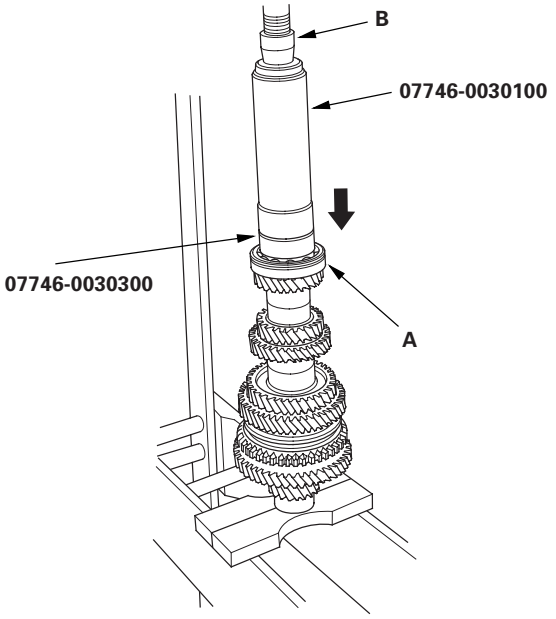

23. Securely clamp the countershaft assembly in a bench vise with wood blocks (A).

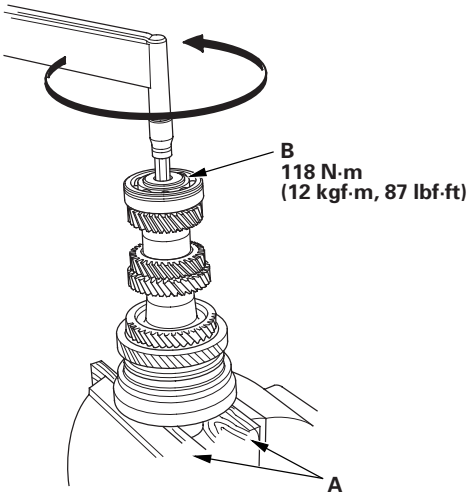

24. Tighten the new special bolt (B) (left-hand threads).

Synchro Sleeve and Hub Inspection and Reassembly

1. Inspect gear teeth on all synchro hubs and synchro sleeves for wear (rounded off corners).

2. Install each synchro hub (A) in its mating synchro sleeve (B), and check for free movement. Make sure you match the three sets of longer teeth (C) (120 degrees apart) on the synchro sleeve with the three sets of deeper grooves (D) in the synchro hub. Do not install the synchro sleeve with its longer teeth in the 1st/2nd synchro hub slots (E) because it will damage the spring ring.

   NOTE: If replacement is required, always replace the synchro sleeve and the synchro hub as a set.

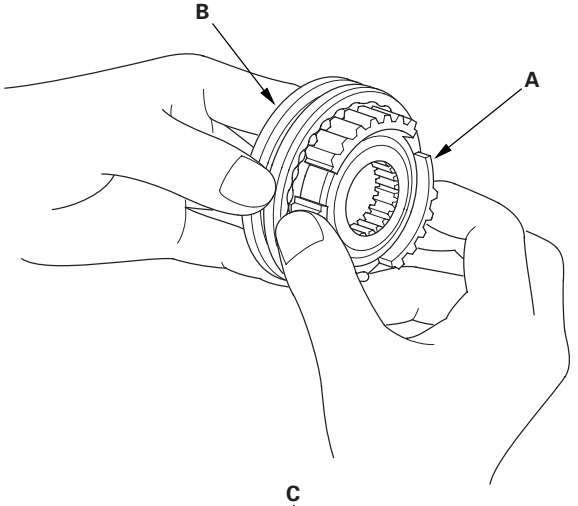

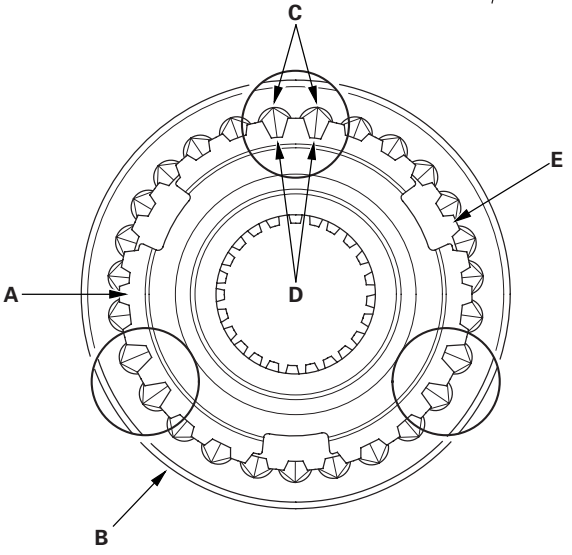

Synchro Ring and Gear Inspection

1. Inspect the inside of each synchro ring (A) for wear. Inspect the teeth (B) on each synchro ring for wear (rounded off).

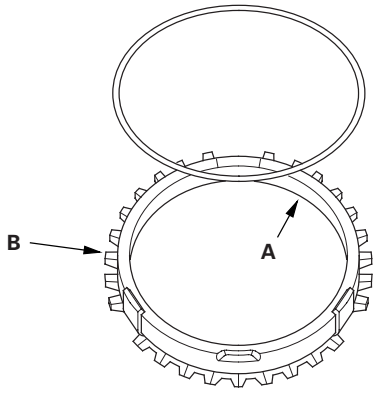

Example of synchro ring teeth

2. Inspect the teeth (C) on each synchro sleeve and matching teeth on each gear for wear (rounded off).

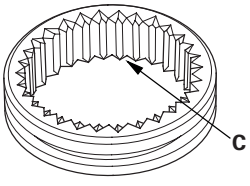

Example of synchro sleeve teeth and gear teeth

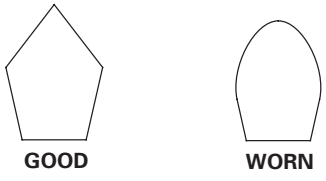

3. Inspect the thrust surface (D) on each gear hub for wear.

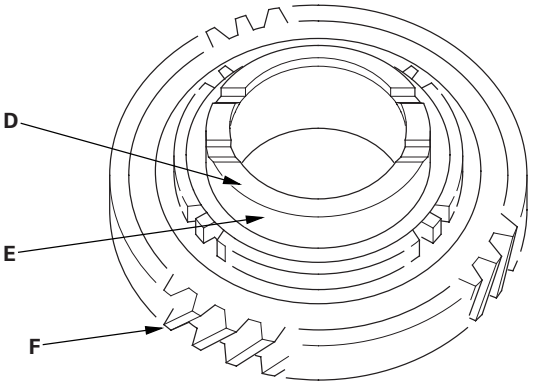

4. Inspect the cone surface (E) on each gear hub for wear and roughness.

5. Inspect the teeth on all gears (F) for uneven wear, scoring, galling, and cracks.

6. Coat the cone surface of each gear (E) with transmission fluid, and place its synchro ring on it. Rotate the synchro ring, making sure it does not slip.

(cont'd)

Synchro Ring and Gear Inspection (cont'd)

7. Measure the clearance between each gear (A) and its synchro ring (B) all around the gear. Hold the synchro ring against the gear evenly while measuring the clearance. If the clearance is less than the service limit, replace the synchro ring and gear.

Synchro Ring-to-Gear Clearance
(5-speed model only)
Standard: 0.70—1.49 mm (0.028—0.059 in.)
Service Limit: 0.4 mm (0.016 in.)

Synchro Ring-to-Gear Clearance
(2005-2006 6-speed models)
Standard: 0.70—1.49 mm (0.028—0.059 in.)
Service Limit: 0.4 mm (0.016 in.)

Double Cone Synchro (6-speed model only) and Triple Cone Synchro-to-Gear Clearance
Standard:
①: Outer Synchro Ring (B) to Synchro Cone (C) 0.70—1.19 mm (0.028—0.047 in.)
②: Synchro Cone (C) to Gear (A) 0.50—1.04 mm (0.020—0.041 in.)
③: Outer Synchro Ring (B) to Gear (A) 0.95—1.68 mm (0.037—0.066 in.)
Service Limit:
①: 0.3 mm (0.012 in.)
②: 0.3 mm (0.012 in.)
③: 0.6 mm (0.024 in.)

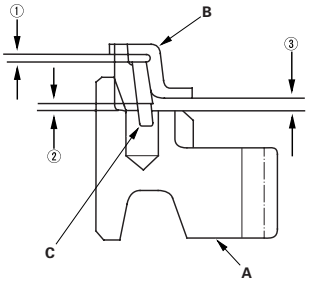

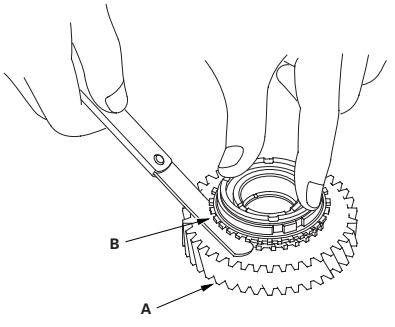

Mainshaft Bearing and Oil Seal Replacement

Special Tools Required
- Oil seal driver 07JAD-PL90100
- Adjustable bearing puller, 20—40 mm 07736-A01000B
- Driver attachment, 42 x 47 mm 07746-0010300
- Driver 07749-0010000

1. Remove the differential assembly.

2. Remove the ball bearing (A) from the clutch housing (B) using the special tools.

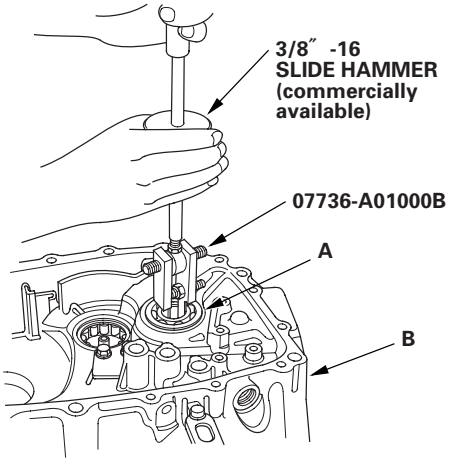

3. Remove the oil seal (A) from the clutch side. Be careful when removing the seal so the clutch housing is not damaged.

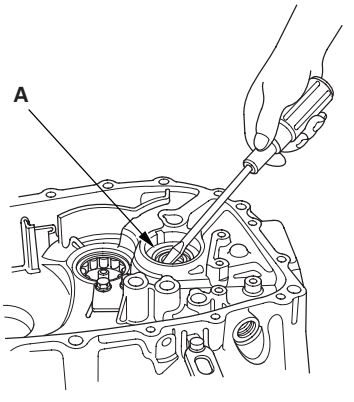

4. Drive in the new oil seal from the transmission side using the special tools.

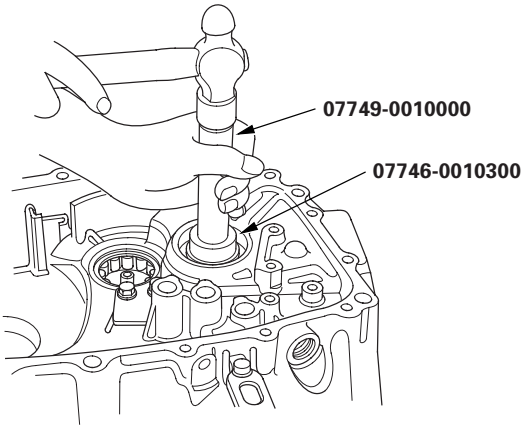

5. Drive in the new ball bearing (A) from the transmission side using the special tools.

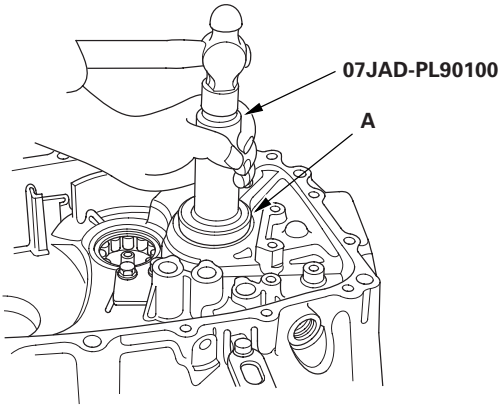

Special Tools Required
- Oil seal driver 07JAD-PL90100
- Adjustable bearing puller, 20—40 mm 07736-A01000B

1. Remove the bearing set plate (A) from the clutch housing (B).

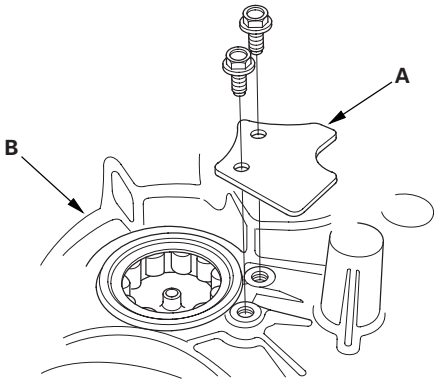

2. Remove the needle bearing (A) using the special tools, then remove the oil guide plate C.

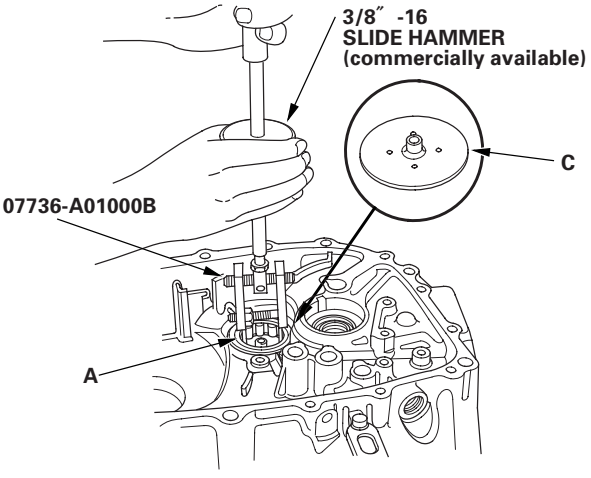

(cont'd)

Countershaft Bearing Replacement (cont'd)

3. Position the oil guide plate C and new needle bearing (A) in the bore of the clutch housing (B).

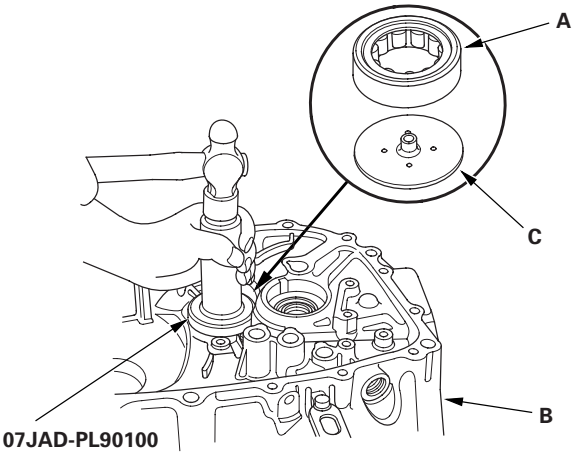

4. Install the needle bearing using the special tools.

5. Install the bearing set plate (A) with the bolts (B).

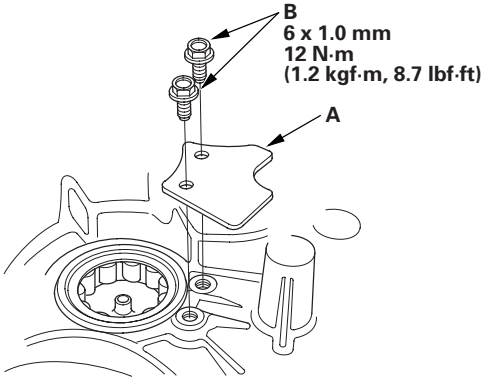

Mainshaft Thrust Clearance Adjustment

Special Tools Required
- Mainshaft holder 07GAJ-PG20110
- Mainshaft base 07GAJ-PG20130

1. Remove the 72 mm shim (A) and oil guide plate M from the transmission housing (B).

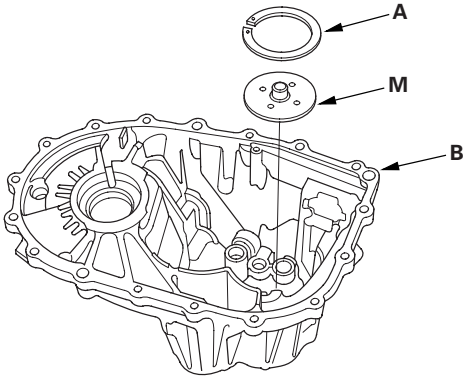

2. Thoroughly clean the spring washer (A) and washer (B) before installing them on the clutch housing side ball bearing (C). Note the installation direction of the spring washer.

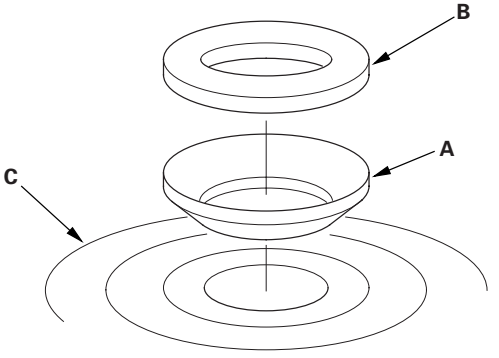

3. Install the 3rd/4th synchro hub, the distance collar, the 5th synchro hub (5-speed model) or 5th/6th synchro hub (6-speed model), the distance collar, and the ball bearing on the mainshaft.

   NOTE: Refer to the mainshaft reassembly Exploded View (see page 13-44).

4. Install the mainshaft in the clutch housing.

5. Place the transmission housing over the mainshaft and onto the clutch housing.

6. Secure the clutch and transmission housings with several 8 mm bolts.

   NOTE: It is not necessary to use sealing agent between the housing for this procedure.

7. Lightly tap on the mainshaft with a plastic hammer.

8. Attach the special tool to the mainshaft as follows:

   - Back-out the mainshaft holder bolt (A), and loosen the two hex bolts (B).
   - Fit the holder over the mainshaft so its lip is towards the transmission.
   - Align the mainshaft holder lip around the groove at the inside of the mainshaft splines, then tighten the hex bolts.

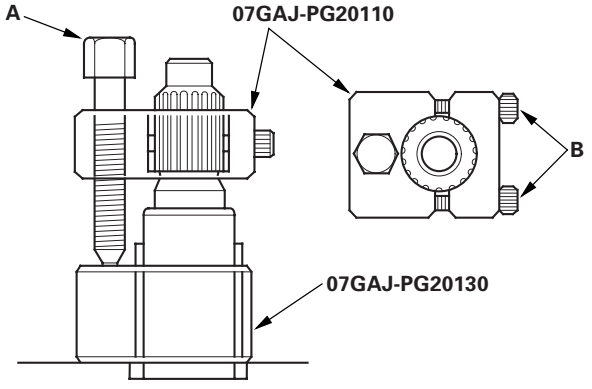

9. Fully seat the mainshaft by tapping its end with a plastic hammer.

10. Thread the mainshaft holder bolt in until it just contacts the wide surface of the mainshaft base.

11. Zero a dial gauge (A) on the end of the mainshaft.

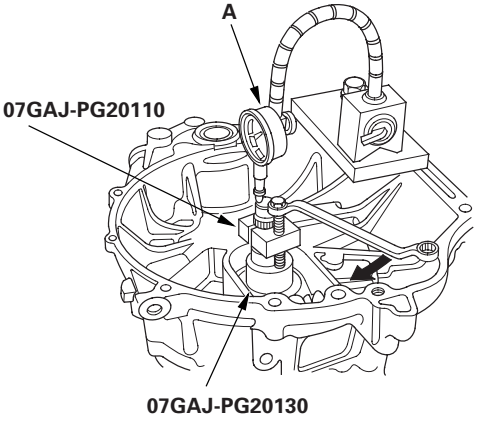

12. Turn the mainshaft holder bolt (B) clockwise; stop turning when the dial gauge has reached its maximum movement. The reading on the dial gauge is the amount of mainshaft thrust clearance.

    NOTE: Do not turn the mainshaft holder bolt more than 60 degrees after the needle of the dial gauge stops moving. Applying more pressure with the mainshaft holder bolt may damage the transmission.

13. If the reading is within the standard, the clearance is correct. If the reading is not within the standard, select the appropriate shim needed from the table, and recheck the thrust clearance.

    Standard: 0.11—0.17 mm (0.004—0.007 in.)

    (Example)
    Measure reading: 1.93 mm (0.0759 in.)

    Subtract the total clearance measurement from the middle of the clearance standard 0.14 mm (0.0056 in.).

    1.93—0.14=1.79 mm (0.0704 in.)

    Select the shim closest to the amount calculated. For this example, the 1.80 mm (0.0709 in.) shim is best.

14. With the oil guide plate M and the appropriate size shim installed in the transmission housing, check the thrust clearance again to verify the clearance is within the standard.

(cont'd)

Mainshaft Thrust Clearance Adjustment (cont'd)

72 mm Shim

	Part Number	Thickness
A	23931-P21-000	0.60 mm (0.0236 in.)
B	23932-P21-000	0.63 mm (0.0248 in.)
C	23933-P21-000	0.66 mm (0.0260 in.)
D	23934-P21-000	0.69 mm (0.0271 in.)
E	23935-P21-000	0.72 mm (0.0283 in.)
F	23936-P21-000	0.75 mm (0.0295 in.)
G	23937-P21-000	0.78 mm (0.0307 in.)
H	23938-P21-000	0.81 mm (0.0319 in.)
I	23939-P21-000	0.84 mm (0.0331 in.)
J	23940-P21-000	0.87 mm (0.0343 in.)
K	23941-P21-000	0.90 mm (0.0354 in.)
L	23942-P21-000	0.93 mm (0.0366 in.)
M	23943-P21-000	0.96 mm (0.0378 in.)
N	23944-P21-000	0.99 mm (0.0390 in.)
O	23945-P21-000	1.02 mm (0.0402 in.)
P	23946-P21-000	1.05 mm (0.0413 in.)
Q	23947-P21-000	1.08 mm (0.0425 in.)
R	23948-P21-000	1.11 mm (0.0437 in.)
S	23949-P21-000	1.14 mm (0.0449 in.)
T	23950-P21-000	1.17 mm (0.0461 in.)
U	23951-P21-000	1.20 mm (0.0472 in.)
V	23952-P21-000	1.23 mm (0.0484 in.)
W	23953-P21-000	1.26 mm (0.0496 in.)
X	23954-P21-000	1.29 mm (0.0508 in.)
Y	23955-P21-000	1.32 mm (0.0520 in.)
Z	23956-P21-000	1.35 mm (0.0531 in.)
AA	23957-P21-000	1.38 mm (0.0543 in.)
AB	23958-P21-000	1.41 mm (0.0555 in.)
AC	23959-P21-000	1.44 mm (0.0567 in.)
AD	23960-P21-000	1.47 mm (0.0579 in.)
AE	23961-P21-000	1.50 mm (0.0591 in.)
AF	23962-P21-000	1.53 mm (0.0602 in.)
AG	23963-P21-000	1.56 mm (0.0614 in.)
AH	23964-P21-000	1.59 mm (0.0626 in.)
AI	23965-P21-000	1.62 mm (0.0638 in.)
AJ	23966-P21-000	1.65 mm (0.0650 in.)
AK	23967-P21-000	1.68 mm (0.0661 in.)
AL	23968-P21-000	1.71 mm (0.0673 in.)
AM	23969-P21-000	1.74 mm (0.0685 in.)
AN	23970-P21-000	1.77 mm (0.0697 in.)
AO	23971-P21-000	1.80 mm (0.0709 in.)
AP	23972-PPP-J00	1.83 mm (0.0720 in.)
AQ	23973-PPP-J00	1.86 mm (0.0732 in.)
AR	23974-PPP-J00	1.89 mm (0.0744 in.)
AS	23975-PPP-J00	1.92 mm (0.0756 in.)
AT	23976-PPP-J00	1.95 mm (0.0768 in.)
AV	23977-PPP-J00	1.98 mm (0.0779 in.)
AW	23978-PPP-J00	2.01 mm (0.0791 in.)
AX	23979-PPP-J00	2.04 mm (0.0803 in.)
AY	23980-PPP-J00	2.07 mm (0.0815 in.)
AZ	23981-PPP-J00	2.10 mm (0.0827 in.)
BA	23982-PPP-J00	2.13 mm (0.0839 in.)
BB	23983-PPP-J00	2.16 mm (0.0850 in.)
BC	23984-PPP-J00	2.19 mm (0.0862 in.)
BD	23985-PPP-J00	2.22 mm (0.0874 in.)
BE	23986-PPP-J00	2.25 mm (0.0886 in.)

Transmission Reassembly

NOTE:
- Prior to reassembling, clean all the parts in solvent, dry them, and apply lubricant to any contact surfaces.
- 6-speed model is shown, 5-speed model is similar.

1. Install the magnet (A) and the differential assembly (B).

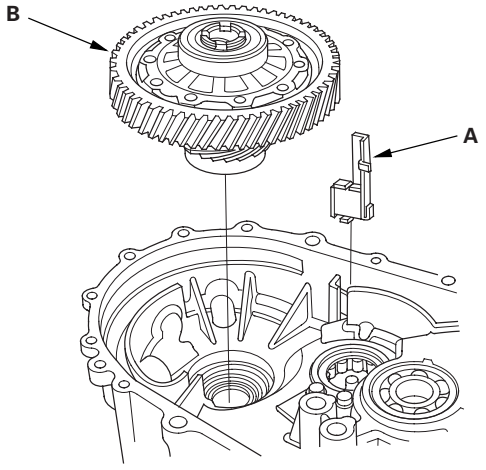

2. Install the 28 mm spring washer (A) and the 28 mm washer (B) over the ball bearing (C). Note the installation direction of the spring washer.

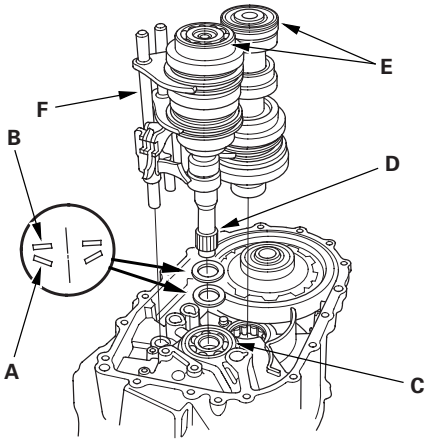

3. Apply tape to the mainshaft splines (D) to protect the seal. Install the mainshaft and the countershaft (E) into the shift forks (F), and install them as an assembly.

4. Install the reverse shift fork.

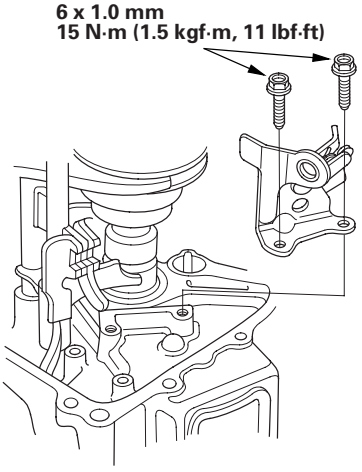

5. Install the reverse idler gear (A) and the reverse gear shift (B) by aligning the mark (C) with the reverse gear shaft hole (D).

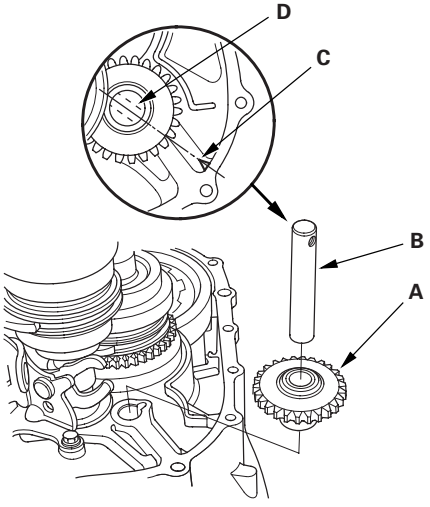

(cont'd)

Transmission Reassembly (cont'd)

6. 5-speed model: Install the reverse lock cam.

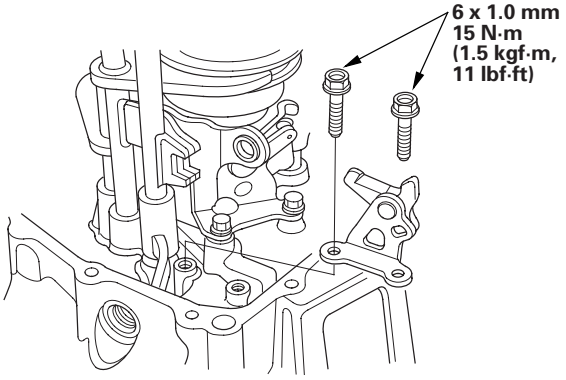

7. Select the proper size 72 mm shim (A) according to the measurements made during the Mainshaft Thrust Clearance Adjustment (see page 13-66). Install the oil gutter plate (B), the oil guide plate M, and the 72 mm shim into the transmission housing (C).

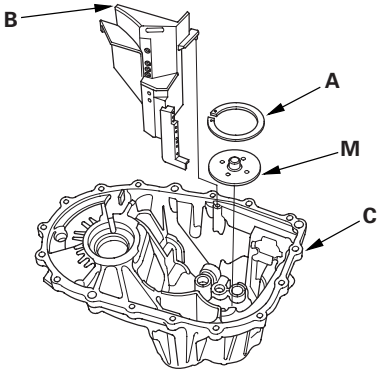

8. Remove any dirt and oil from the transmission housing sealing surface. Apply liquid gasket (P/N 08718-0001 or 08718-0002) to the sealing surface. Make sure you seal the entire circumference of the bolt holes to prevent leakage.

   NOTE: Do not assemble the housings if too much time has passed after applying the liquid gasket (for P/N 08718-0002, no more than 4 minutes, for all others, no more than 5 minutes). Instead, remove the old residue and reapply the riquid gasket.

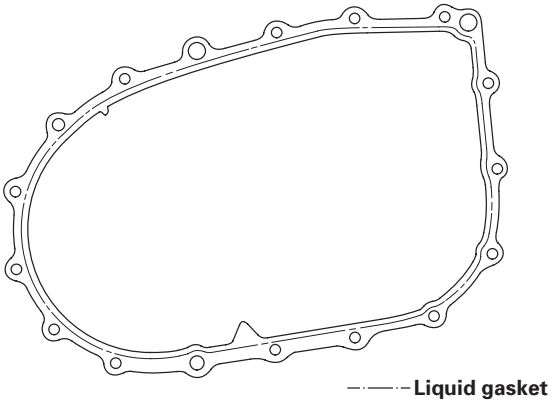

9. Install the 14 x 20 mm dowel pins (A).

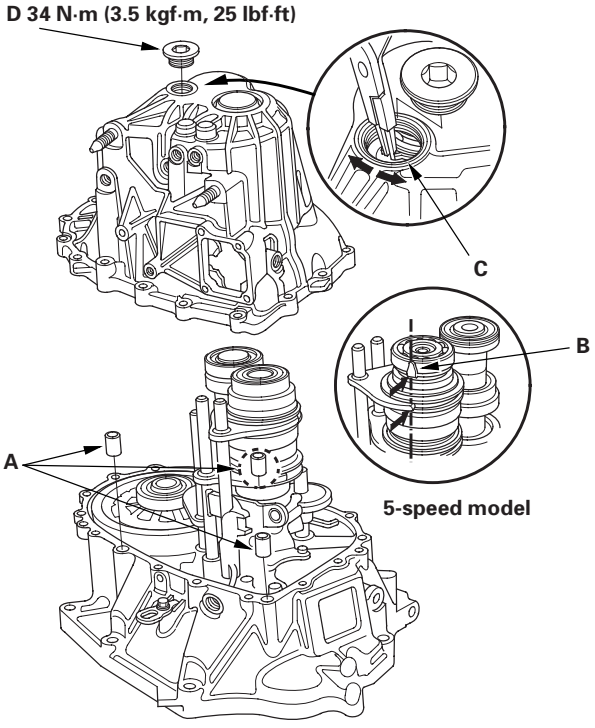

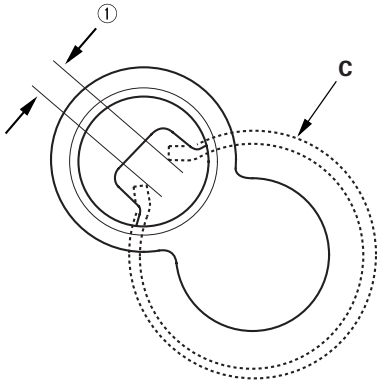

10. Set the tapered cone ring (B) as shown (5-speed model). Place the transmission housing over the clutch housing, being careful to line up the shafts.

11. Lower the transmission housing the rest of the way as you expand the 72 mm snap ring (C). Release the snap ring so it seats in the groove of the countershaft bearing.

12. Make sure the 72 mm snap ring is securely seated in the groove of the countershaft bearing.

    Dimension ① as installed: 3.3—6.0 mm (0.13—0.24 in.)

13. Apply liquid gasket (P/N 08718-0001 or 08718-0002) to the threads of the 32 mm sealing cap (D), and install it on the transmission housing.

    NOTE: Do not install the 32 mm sealing cap if too much time has passed after applying the liquid gasket (for P/N 08718-0002, no more than 4 minutes, for all others, no more than 5 minutes). Instead, remove the old residue and reapply the riquid gasket.

14. Install the harness bracket (A) (6-speed model), the transmission hanger A (B), the transmission hanger B (C), and the 8 mm flange bolts, finger-tight.

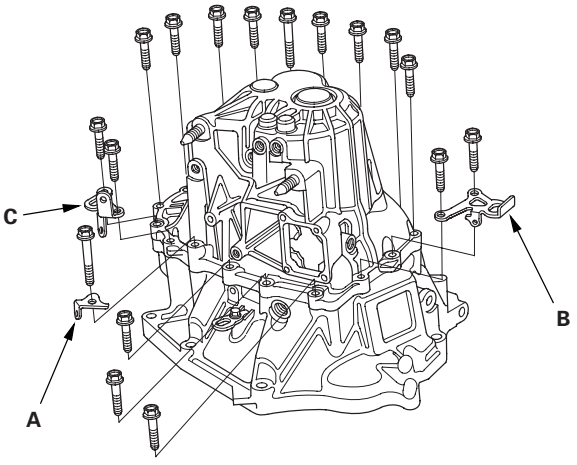

(cont'd)

Transmission Reassembly (cont'd)

15. Tighten the 8 mm flange bolts in a crisscross pattern in several steps.

    8 x 1.25 mm
    27 N·m (2.8 kg·m, 20 lbf·ft)

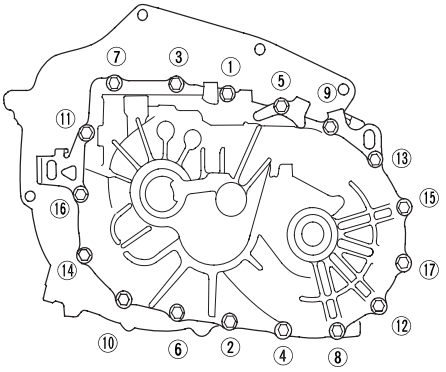

16. Remove any dirt and oil from the change lever cover sealing surface. Apply liquid gasket (P/N 08718-0001 or 08718-0002) to the sealing surface.

    NOTE: Do not install the change lever cover if too much time has passed after applying the liquid gasket (for P/N 08718-0002, no more than 4 minutes, for all others, no more than 5 minutes). Instead, remove the old residue and reapply the liquid gasket.

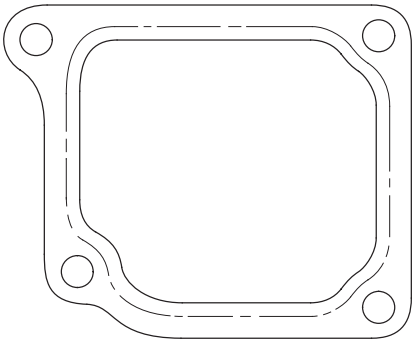

Liquid gasket

17. Install the 8 x 14 mm dowel pins (A), the change lever assembly (B), and the clutch line clip bracket (C).

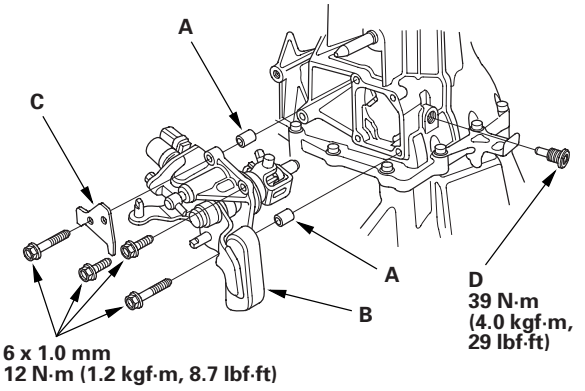

18. Apply liquid gasket (P/N 08718-0001 or 08718-0002) to the threads of the interlock bolt (D), and install it on the transmission housing.

    NOTE: Do not install the interlock bolt if too much time has passed after applying the liquid gasket (for P/N 08718-0002, no more than 4 minutes, for all others, no more than 5 minutes). Instead, remove the old residue and reapply the riquid gasket.

19. 2002-2004 models: Install the drain plug (A), the filler plug (B), and the 10 mm flange bolt (C) with new washers.

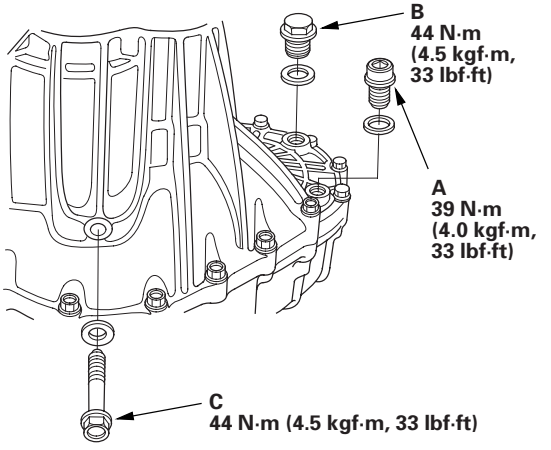

20. 2005-2006 models: Install the drain plug (A), the filler plug (B), the 10 mm flange bolt (C), the output shaft (countershaft) speed sensor (D), the plain washer (5-speed model) (E), and the new O-ring (F).

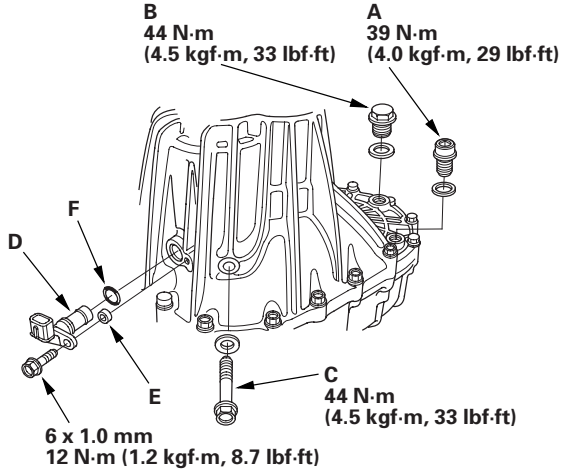

21. Install the detent bolts (A), the springs, and the steel balls with new washers.

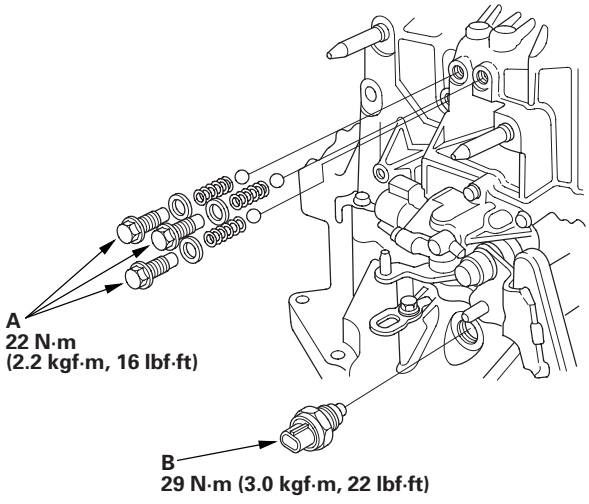

22. Apply liquid gasket (P/N 08718-0001 or 08718-0002) to the threads of the back-up light switch (B), and install it on the transmission housing.

    NOTE: Do not install the back-up light switch if too much time has passed after applying the liquid gasket (for P/N 08718-0002, no more than 4 minutes, for all others, no more than 5 minutes). Instead, remove the old residue and reapply the riquid gasket.

23. 2002-2004 models: Install the vehicle speed sensor (VSS) (A) and the O-ring (B).

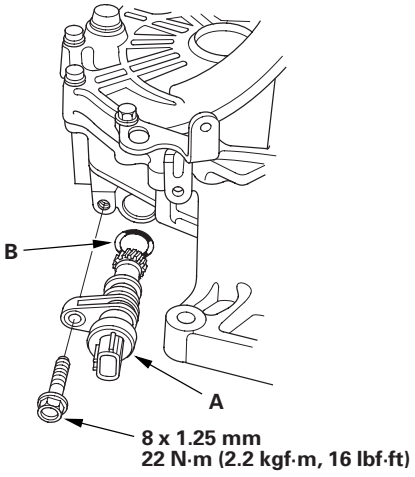

24. 2005-2006 models: Install the 20 mm bolt (A) and the new 20 mm washer (B).

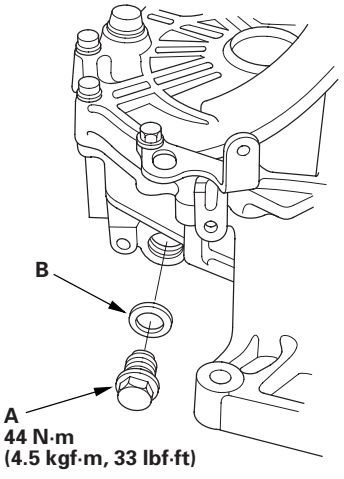

Gearshift Mechanism Replacement

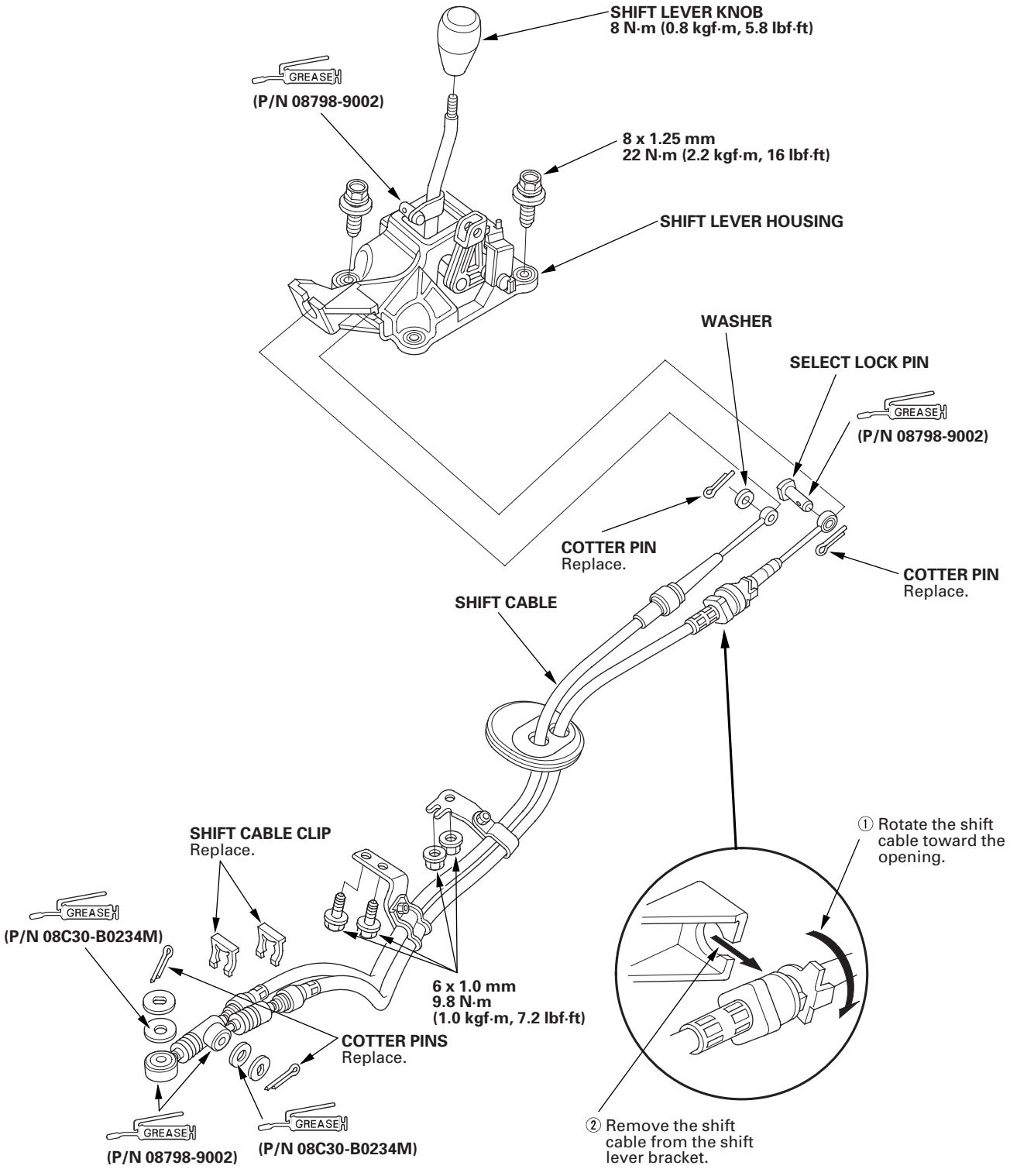

Component Location Index

NOTE: 6-speed model has reverse lockout system. 5-speed model does not have this system.

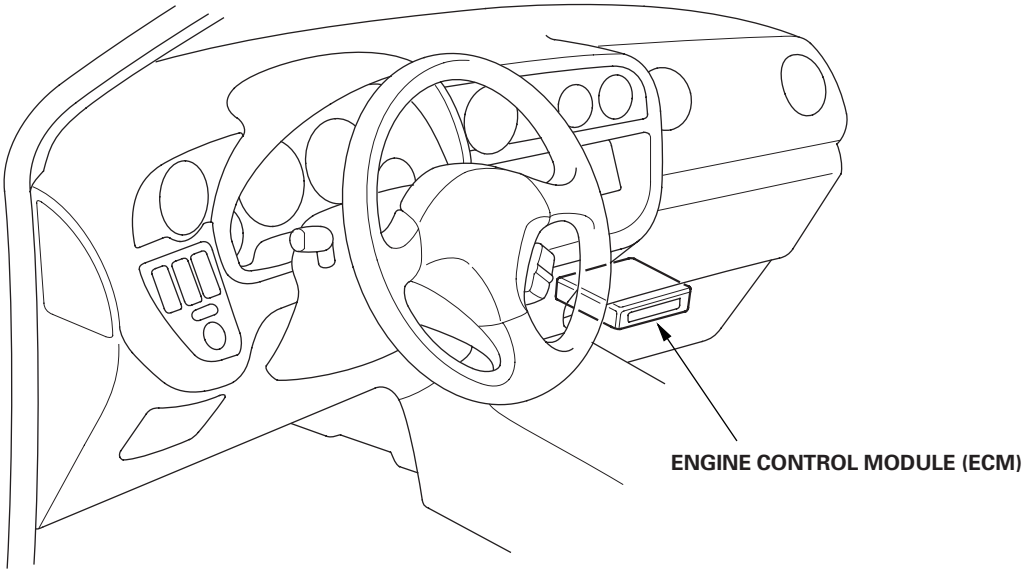

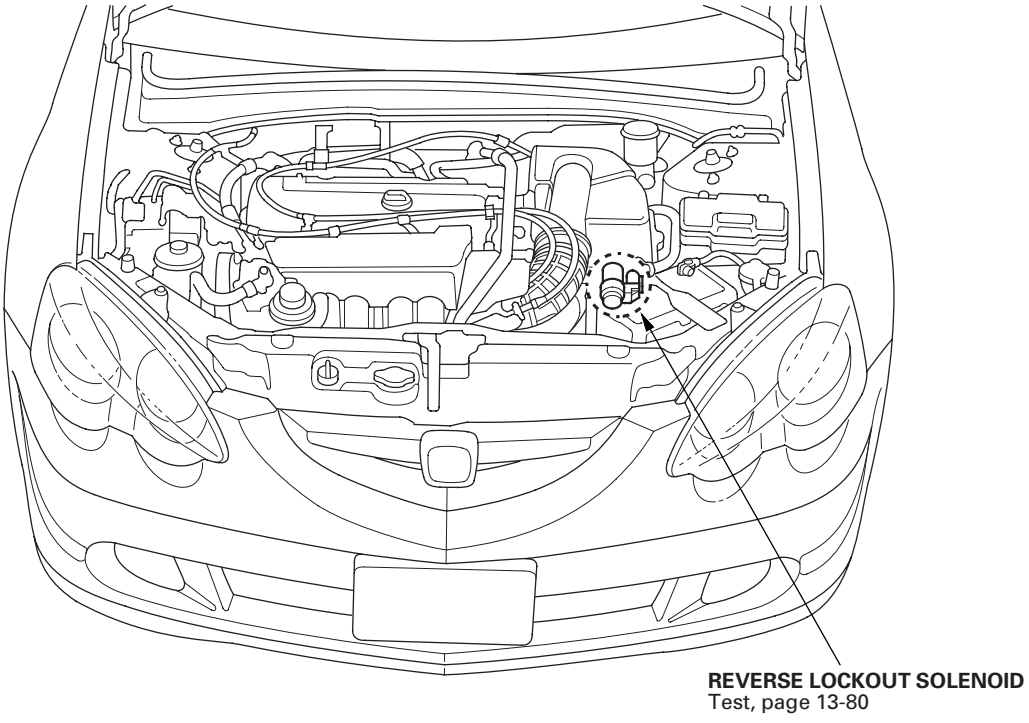

Reverse Lockout System

System Description

At a vehicle speed of 12 mph (20 km/h) or more, a signal from the ECM activates the reverse lockout solenoid, which pushes the select lock cam B into the locked position. As a result, the select lever cannot rotate to the reverse select position, making it impossible to engage reverse gear. At a vehicle speed of 9 mph (15 km/h) or less, the signal from the ECM is interrupted, which turns off the reverse lockout solenoid. The select lock return spring pulls back the select lock cam B, enabling the select lever to move freely so the reverse gear can be selected.

Vehicle speed	Inhibitor	Reverse selection
Above 12 mph (20 km/h)	ON	Not allowed
Below 9 mph (15 km/h)	OFF	OK
IG-S/W OFF	OFF	OK

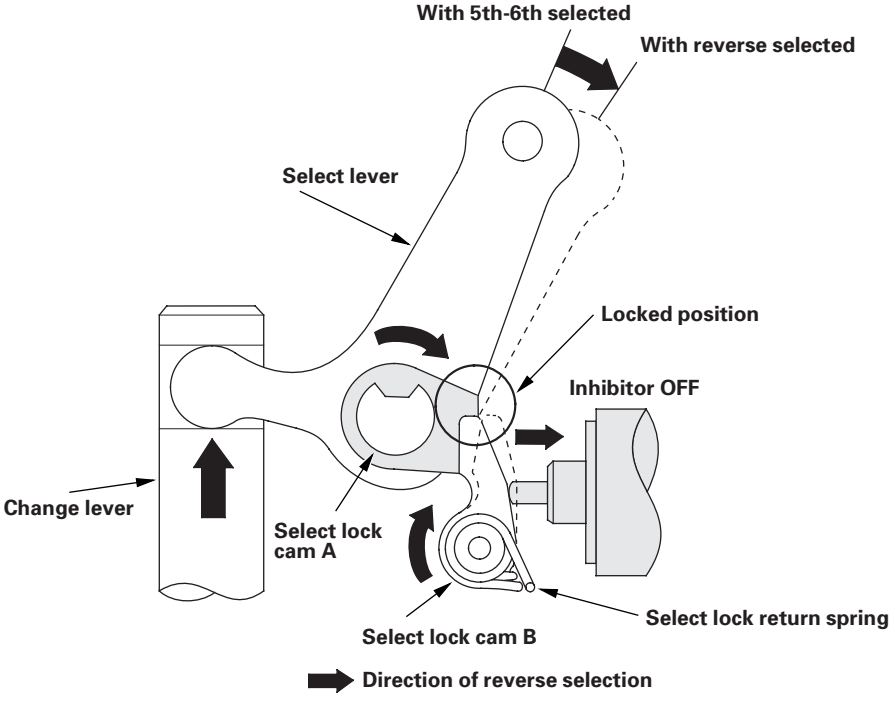

Circuit Diagram

2002-2004 models

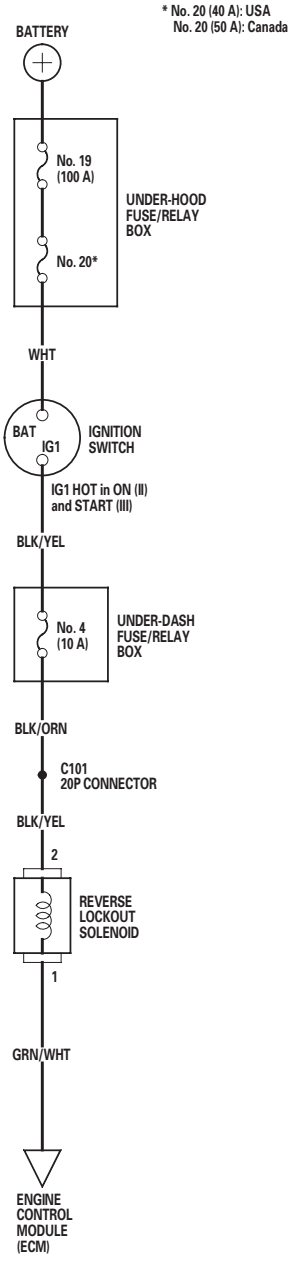

2005-2006 models

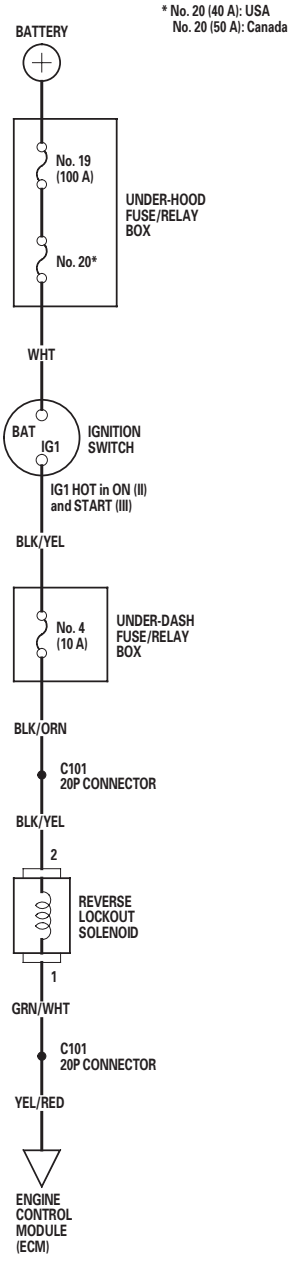

Circuit Troubleshooting

1. Check the No. 4 (10A) fuse in the under-dash fuse/relay box.

   Is the fuse OK?

   YES—Go to step 2.

   NO—Replace the fuse, and recheck. ■

2. Start the engine, and check the Malfunction Indicator Lamp (MIL).

   Does the MIL come on?

   YES—Troubleshoot the DTC (see page 11-3), and recheck. ■

   NO—Go to step 3.

3. Turn the ignition switch OFF.

4. Shift into reverse gear.

   Can the transmission be shifted into reverse gear?

   YES—Go to step 5.

   NO—Repair the transmission, and recheck. ■

5. Turn the ignition switch ON (II). With the vehicle moving slowly (vehicle speed below 9 mph (15 km/h)), shift the transmission into reverse gear.

   Can the transmission be shifted into reverse gear?

   YES—Go to step 6.

   NO—Go to step 7.

6. Raise the front wheels, and block the rear wheels. Run the vehicle to a speed above 12 mph (20 km/h).

   Can the transmission be shifted into reverse gear?

   YES—Go to step 7.

   NO—Intermittent failure, system is OK at this time. ■

7. Turn the ignition switch OFF.

8. Disconnect the reverse lockout solenoid 2P connector.

9. Turn the ignition switch ON (II).

10. Measure the voltage between the reverse lockout solenoid 2P connector terminal No. 2 and body ground.

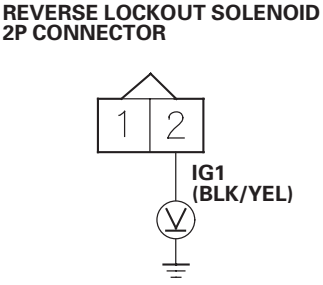

Wire side of female terminals

   Is there battery voltage?

   YES—Go to step 11.

   NO—Check for loose or poor connections at C101 (20P) connector. If the connections are OK, repair open in the wire between No. 4 (10 A) fuse in the under-dash fuse/relay box and the reverse lockout solenoid. ■

11. Turn the ignition switch OFF.

12. Remove the reverse lockout solenoid (see page 13-80).

13. Connect the No. 2 terminal of the reverse lockout solenoid 2P connector to the battery positive terminal, and connect the No. 1 terminal to the battery negative terminal. Make sure the reverse lockout solenoid operates.

REVERSE LOCKOUT SOLENOID 2P CONNECTOR

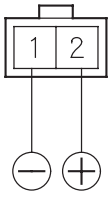

Terminal side of male terminals

Does the reverse lockout solenoid operate properly?

YES—Go to step 14.

NO—Replace the reverse lockout solenoid. ■

14. Reinstall the reverse lockout solenoid, and reconnect the solenoid 2P connector.

15. Turn the ignition switch ON (II).

16. Measure the voltage between ECM connector B7 terminal (2002-2004 models) or E2 terminal (2005-2006 models) and body ground.

2002-2004 models:

ECM CONNECTOR B (24P)

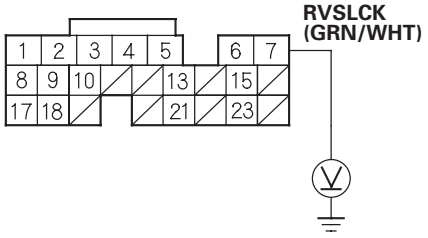

Wire side of female terminals

2005-2006 models:

ECM CONNECTOR E (31P)

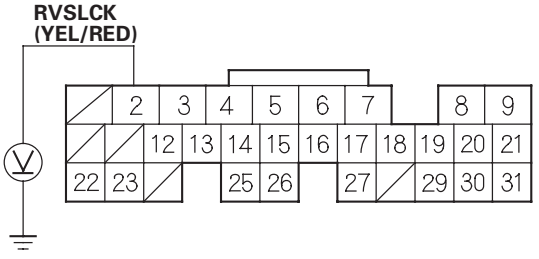

Wire side of female terminals

Is there battery voltage?

YES—Check for loose connectors at ECM connector B (24P) (2002-2004 models) or E (31P) (2005-2006 models). If necessary, update the ECM if it does not have the latest software, or substitute a known-good ECM (see page 11-7), then recheck. If the symptom/indication goes away with a known-good ECM, replace the original ECM (see page 11-284). ■

NO—Repair open in the wire between the reverse lockout solenoid and the ECM (B7) (2002-2004 models) or ECM (E2) (2005-2006 models). ■

Reverse Lockout Solenoid Test

1. Remove the reverse lockout solenoid (see page 13-80).

2. Connect battery positive terminal to the No. 2 terminal of the reverse lockout solenoid 2P connector, and connect the battery negative terminal to the No. 1 terminal.

REVERSE LOCKOUT SOLENOID 2P CONNECTOR

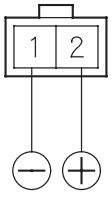

Terminal side of male terminals

3. Make sure the reverse lockout solenoid operates. If the reverse lockout solenoid does not work, replace it.

Reverse Lockout Solenoid Disassembly/Reassembly

1. Make sure you have the anti-theft codes for the radio, then write down the customer's radio station presets. Disconnect the negative cable from the battery first, then disconnect the positive cable. Remove the battery.

2. Remove the intake manifold cover (see step 6 on page 5-2).

3. Remove the air cleaner housing (see step 7 on page 5-2).

4. Remove the intake air duct (see step 8 on page 5-2).

5. Remove the battery base (see step 5 on page 13-5).

6. Disconnect the trasmission ground cable (see step 6 on page 13-5).

7. Disconnect the back-up light switch connector, the vehicle speed sensor (VSS) connector, the reverse lockout solenoid connector, and the output shaft speed sensor connector (see step 7 on page 13-5).

8. Carefully remove the shift cable, select cable, and cable bracket together to avoid bending the cables (see step 8 on page 13-6).

9. Remove the bolts (A) and reverse lockout solenoid (B).

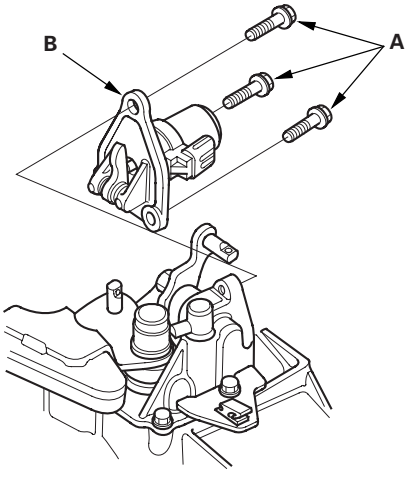

10. Remove the roller (A), the select lock return spring (C), and the select lock cam B.

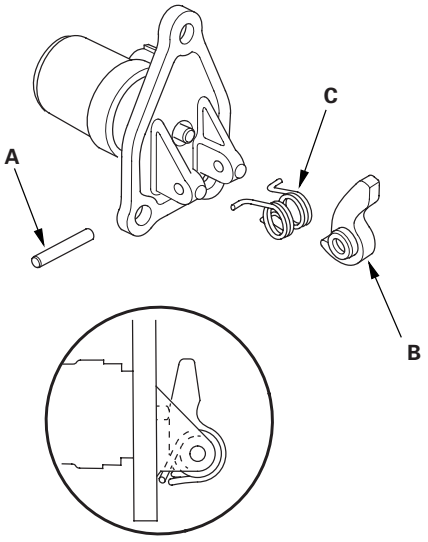

11. Install in the reverse order of removal.

12. Remove any dirt and oil from the sealing surface. Apply liquid gasket (P/N 08718-0001 or 08718-0002) to the sealing surface.

    NOTE: Do not install reverse locknut solenoid if too much time has passed after applying the liquid gasket (for P/N 08718-0002, no more than 4 minutes, for all others, no more than 5 minutes). Instead, remove the old residue and reapply the riquid gasket.

13. Install the reverse lockout solenoid.

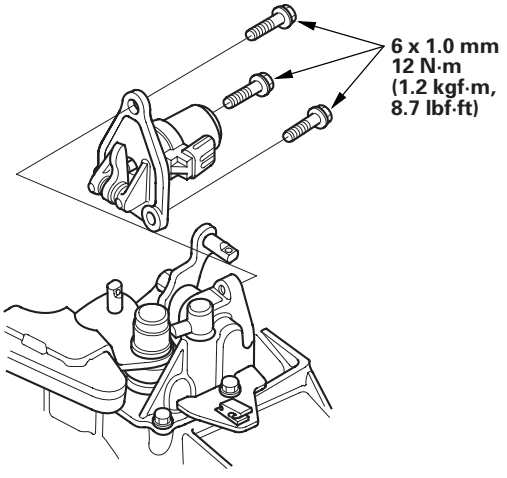

14. Install the cable bracket, select cable, and shift cable (see step 26 on page 13-17).

15. Connect the back-up light switch connector, the vehicle speed sensor (VSS) connector, the reverse lockout solenoid connector, and the output shaft (countershaft) speed sensor connector (see step 28 on page 13-17).

16. Connect the transmission ground cable (see step 29 on page 13-18).

17. Install the battery base (see step 30 on page 13-18).

18. Install the intake air duct (see step 42 on page 5-19).

19. Install the air cleaner housing (see step 43 on page 5-19).

20. Install the intake manifold cover (see step 45 on page 5-19).

21. Install the battery. Clean the battery posts and cable terminals with sandpaper, then assemble them apply grease to prevent corrosion. Connect the positive cable to the battery first, then connect the negative cable.

22. Enter the audio anti-theft codes, then enter the customer's audio station presets, and set the clock.

23. 2002-2004 models: Do the ECM idle learn procedure (see page 11-349).

24. Do the power window control unit reset procedure (see page 22-148).

Component Location Index

2002-2004 models:

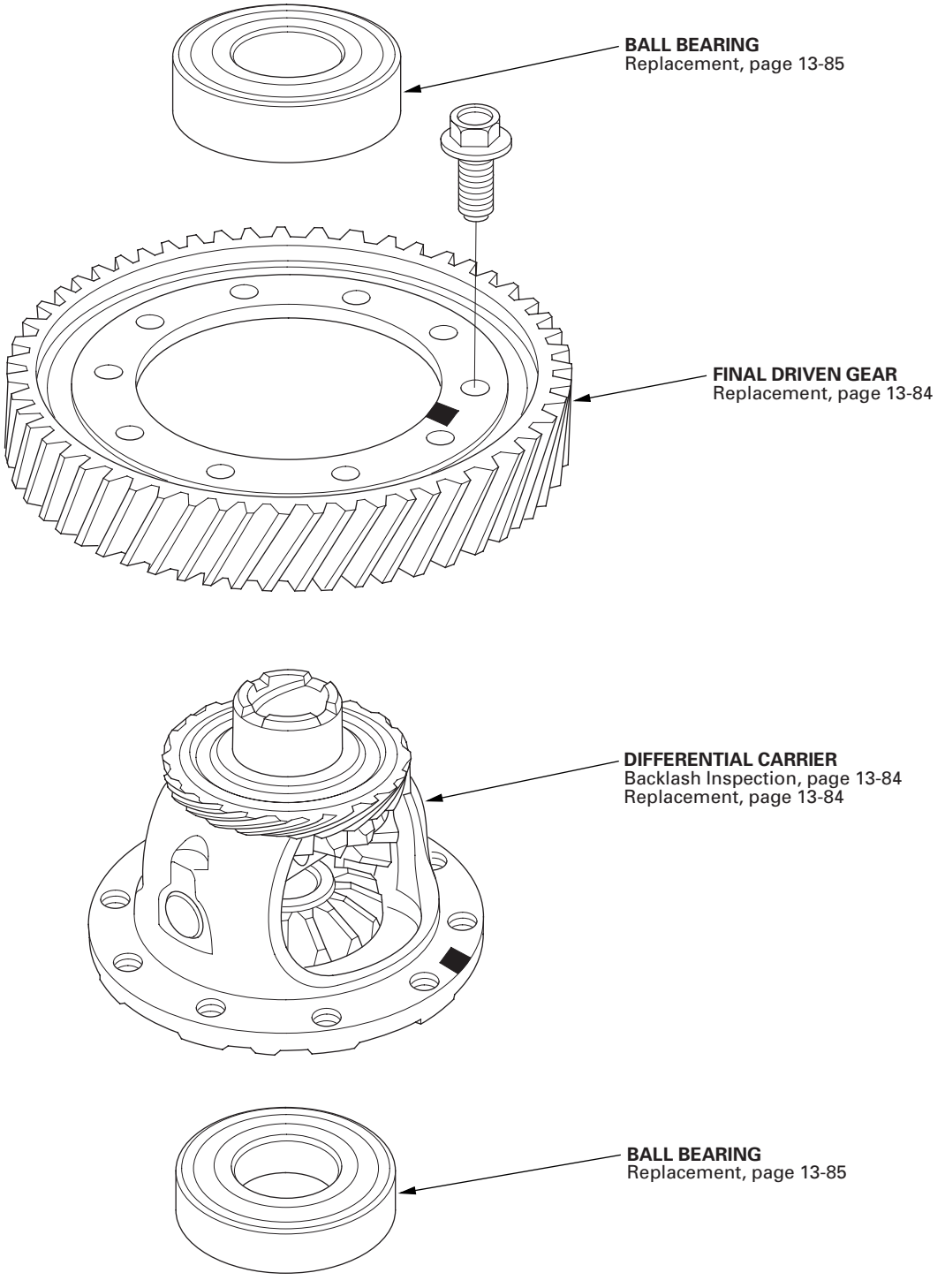

2005-2006 models:

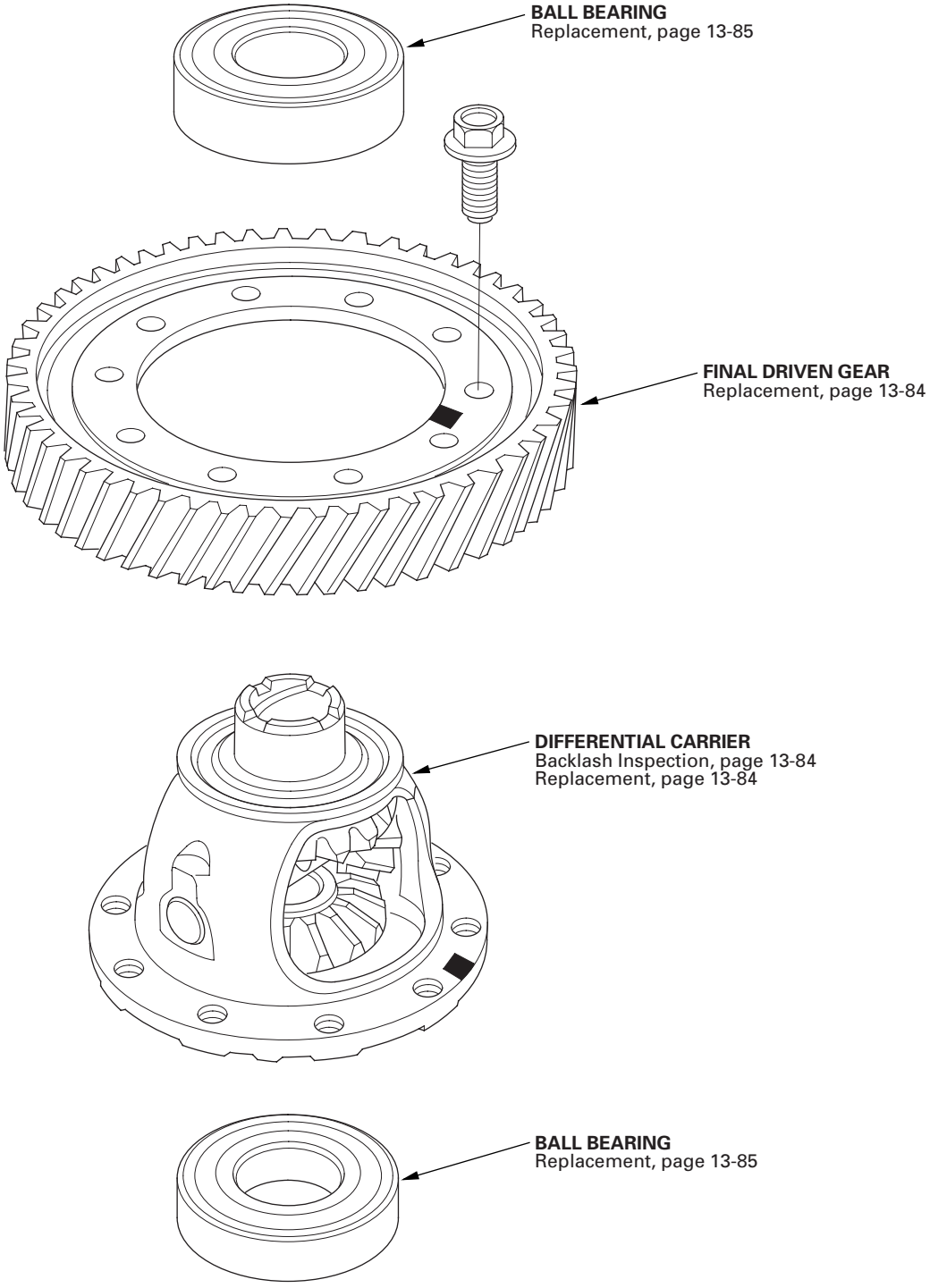

Backlash Inspection

1. Place the differential assembly on V-blocks (A), and install both axles.

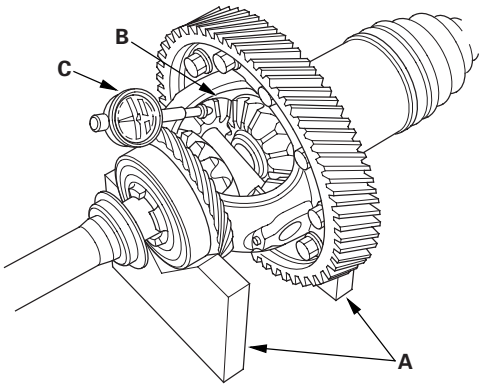

2. Measure the backlash of both pinion gears (B) with a dial indicator (C). If the backlash is not within the standard, replace the differential carrier.

   Standard (New): 0.05—0.15 mm (0.002—0.006 in.)

Differential Carrier, Final Driven Gear Replacement

1. Remove the bolts (left-hand threads) in a crisscross pattern in several steps, then remove the final driven gear (A) from the differential carrier (B).

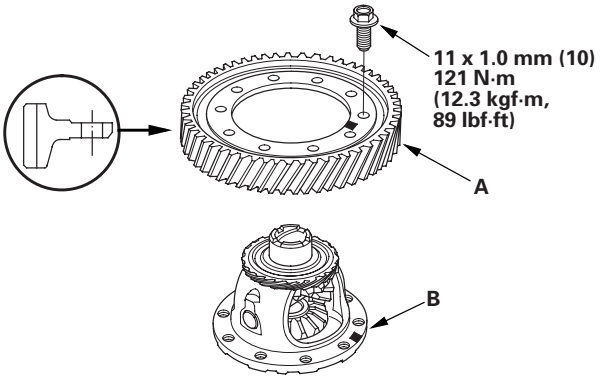

2. Install the final driven gear with the chamfer on the inside diameter facing the carrier. Tighten the bolts in a crisscross pattern in several steps.

Carrier Bearing Replacement

Special Tools Required
Driver, 40 mm I.D. 07746-0030100

1. Check the carrier bearings for wear and rough rotation. If they rotate smoothly and their rollers show no signs of wear, the bearings are OK.

2. Remove the carrier bearing (A) with a commercially-available bearing puller (B).

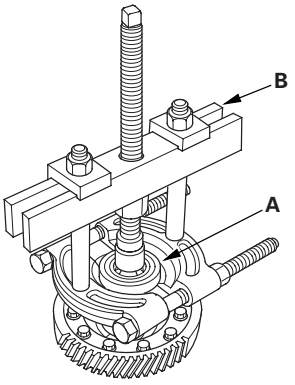

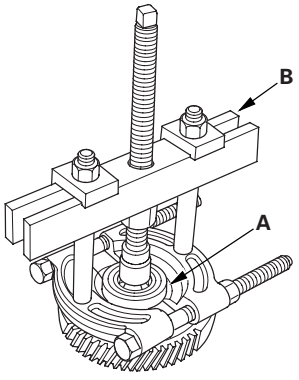

3. Install the new bearings (A) with the special tool and a press. Press on each bearing until it bottoms. There should be no clearance between the bearings and the carrier.

   NOTE: Place the seal part of the bearing (B) towards the outside of the differential, then install it.

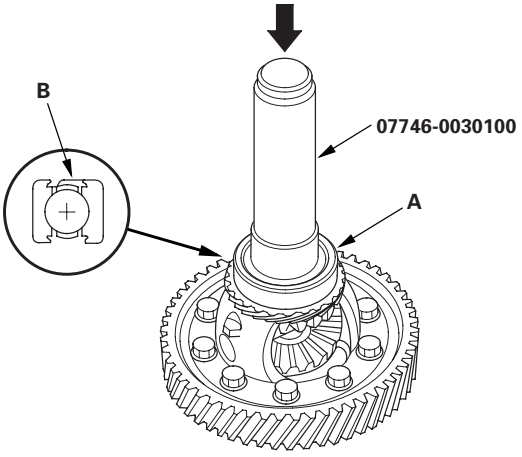

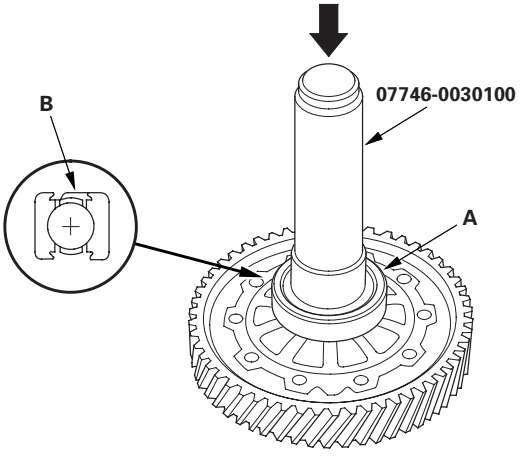

Oil Seal Replacement

Special Tools Required
- Driver 07749-0010000
- Oil seal driver attachment 07NAD-P20A100

1. Remove the differential assembly.

2. Remove the oil seal (A) from the transmission housing (B).

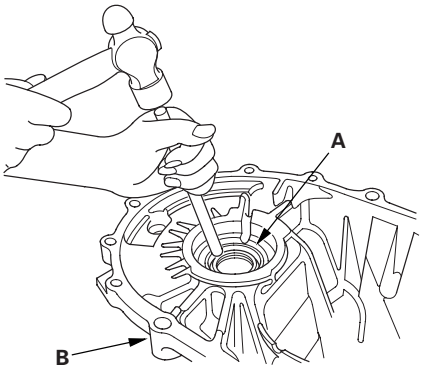

3. Remove the oil seal (A) from the clutch housing (B).

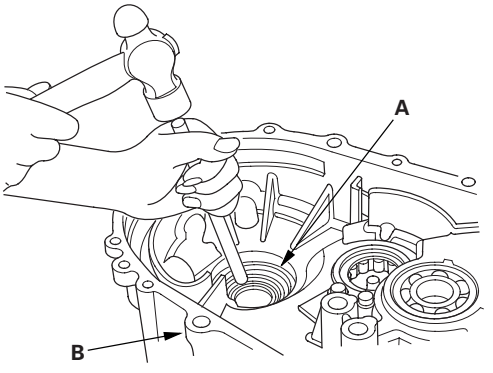

4. Install the new oil seal in the transmission housing with the special tools.

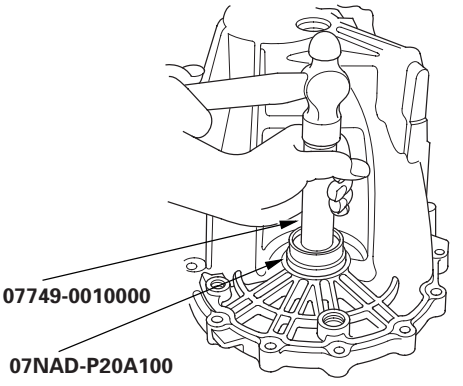

5. Install the new oil seal in the clutch housing with the special tools.

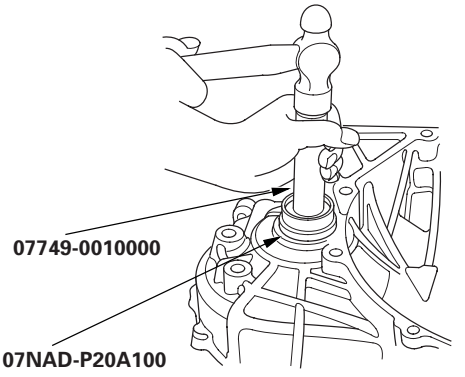

Differential Thrust Clearance Adjustment

Special Tools Required
Driver, 40 mm I.D. 07746-0030100

1. If you removed the 80 mm shim from the transmission housing, reinstall the same sized shim.

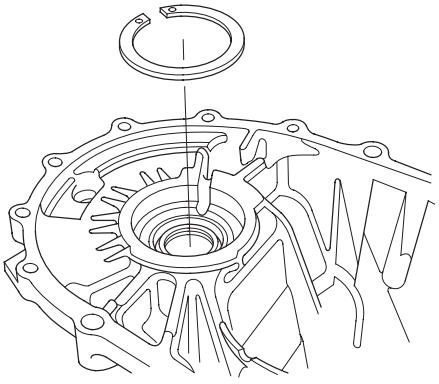

2. Install the differential assembly into the clutch housing.

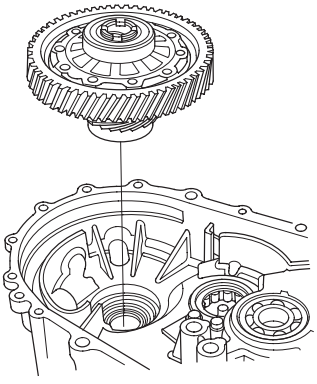

3. Install the transmission housing onto the clutch housing, then tighten the 8 mm flange bolts in a crisscross pattern in several steps (see step 15 on page 13-72).

   8 x 1.25 mm
   27 N·m (2.8 kgf·m, 20 lbf·ft)

4. Use the special tool to bottom the differential assembly in the clutch housing.

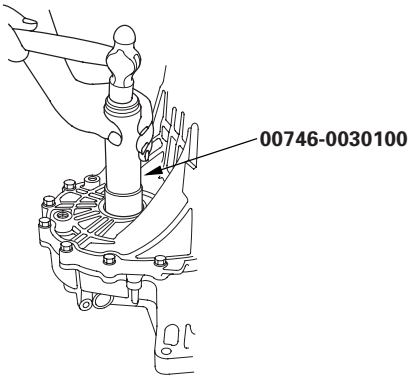

5. Measure the clearance between the 80 mm shim and the bearing outer race in the transmission housing.

   Standard: 0—0.10 mm (0—0.0039 in.)

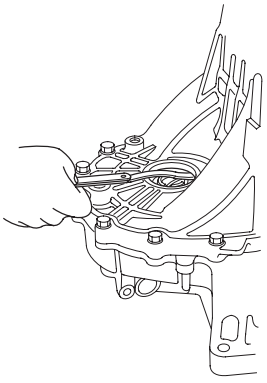

(cont'd)

Differential Thrust Clearance Adjustment (cont'd)

6. If the clearance is more than the standard, select a new shim from the following table. If the clearance measured in step 5 is within the standard, go to step 9.

80 mm Shim

	Part Number	Thickness
A	41441-PL3-B00	1.0 mm (0.0394 in.)
B	41442-PL3-B00	1.1 mm (0.0433 in.)
C	41443-PL3-B00	1.2 mm (0.0472 in.)
D	41444-PL3-B00	1.3 mm (0.0512 in.)
E	41445-PL3-B00	1.4 mm (0.0551 in.)
F	41446-PL3-B00	1.5 mm (0.0591 in.)
G	41447-PL3-B00	1.6 mm (0.0630 in.)
H	41448-PL3-B00	1.7 mm (0.0669 in.)
J	41449-PL3-B00	1.8 mm (0.0709 in.)
K	41450-PL3-B00	1.05 mm (0.0413 in.)
L	41451-PL3-B00	1.15 mm (0.0453 in.)
M	41452-PL3-B00	1.25 mm (0.0492 in.)
N	41453-PL3-B00	1.35 mm (0.0531 in.)
P	41454-PL3-B00	1.45 mm (0.0571 in.)
Q	41455-PL3-B00	1.55 mm (0.0610 in.)
R	41456-PL3-B00	1.65 mm (0.0650 in.)
S	41457-PL3-B00	1.75 mm (0.0689 in.)

7. Remove the bolts and the transmission housing.

8. Replace the thrust shim selected in step 6, then recheck the clearance.

9. Reinstall the transmission.

Automatic Transmission

Automatic Transmission

Special Tools 14-2
General Troubleshooting Information
2002-2004 Models 14-3
2005-2006 Models 14-8
DTC Troubleshooting Index
2002-2004 Models 14-13
2005-2006 Models 14-14
Symptom Troubleshooting Index 14-17
System Description 14-28
DTC Troubleshooting
2002-2004 Models 14-88
2005-2006 Models 14-139
Road Test 14-251
Stall Speed Test 14-253
Pressure Test 14-254
Shift Solenoid Valve Test 14-258
Shift Solenoid Valve Replacement 14-260
A/T Clutch Pressure Control Solenoid Valve
Solenoid Valve A Test 14-262
Solenoid Valve A Replacement 14-263
Solenoid Valve B and C Test 14-264
Solenoid Valve B and C Replacement ... 14-265
Input Shaft (Mainshaft) and Output Shaft (Countershaft) Speed Sensor Replacement 14-266
2nd Clutch Transmission Fluid Pressure Switch Replacement 14-267
3rd Clutch Transmission Fluid Pressure Switch Replacement 14-267
ATF Temperature Sensor Test/ Replacement 14-268
Transmission Gear Selection Switch Test 14-270
Transmission Gear Selection Switch Replacement 14-270
ATF Level Check 14-271
ATF Replacement 14-272
Transmission Removal 14-273
Drive Plate Removal and Installation 14-281
Transmission Installation 14-282
ATF Cooler Cleaning 14-291
ATF Cooler Hose Replacement 14-293
Shift Lever Removal 14-294
Shift Lever Installation 14-295
Shift Lever Disassembly/Reassembly 14-296
Shift Cable Replacement 14-297
Shift Cable Adjustment 14-299

A/T Gear Position Indicator

Component Location Index 14-301
Circuit Diagram
2002-2004 Models 14-302
2005-2006 Models 14-303
Indicator Input Test
2002-2004 Models 14-304
2005-2006 Models 14-305
Transmission Range Switch Test 14-306
Transmission Range Switch Replacement 14-308

A/T Interlock System

Component Location Index 14-310
Circuit Diagram
2002-2004 Models 14-311
2005-2006 Models 14-312
Shift Lock System Circuit Troubleshooting
2002-2004 Models 14-313
2005-2006 Models 14-317
Reverse Lock System Circuit Troubleshooting 14-321
Key Interlock System Circuit Troubleshooting
2002-2004 Models 14-323
2005-2006 Models 14-325
Key Interlock Solenoid Test 14-328
Shift Lock Solenoid Test 14-328
Shift Lock Solenoid Replacement 14-329
Park Pin Switch Test 14-329
Park Pin Switch Replacement 14-330

Transmission End Cover

End Cover Removal 14-331
Park Lever Stop Inspection and Adjustment 14-334
Idler Gear Shaft Bearing Replacement 14-335
Selector Control Shaft Oil Seal Replacement 14-335
Selector Control Shaft Bearing Replacement 14-336
ATF Feed Pipe Replacement 14-336
End Cover Installation 14-394

Transmission Housing

Housing and Shaft Assembly Removal 14-337
Bearing Removal 14-340
Bearing Installation 14-341
Reverse Idler Gear Removal and Installation 14-342
Shaft Assembly and Housing Installation 14-389

Valve Body

Valve Body and ATF Strainer Removal 14-343
Valve Body Repair 14-345
Valve Body Valve Installation 14-346
Main Valve Body Disassembly, Inspection, and Reassembly 14-347
ATF Pump Inspection 14-348
Regulator Valve Body Disassembly, Inspection, and Reassembly 14-349
Servo Body Disassembly, Inspection, and Reassembly 14-350
Shift Solenoid Valve Installation 14-351
Valve Body and ATF Strainer Installation 14-387

Torque Converter Housing

Mainshaft Bearing and Oil Seal Replacement 14-352
Countershaft Bearing Replacement 14-353
Secondary Shaft Bearing Replacement 14-354
Selector Control Shaft Oil Seal Replacement 14-355

Shafts and Clutches

Mainshaft Disassembly, Inspection, and Reassembly 14-356
Mainshaft 5th Gear Clearance Inspection 14-357
Countershaft Disassembly, Inspection, and Reassembly 14-359, 362
Countershaft Reverse Selector Hub, 4th Gear Collar, and 3rd Gear Removal 14-360
Countershaft 3rd Gear, 4th Gear Collar, and Reverse Selector Hub Installation 14-361
Countershaft Reverse Selector Hub and 3rd Gear Removal 14-363
Countershaft 3rd Gear and Reverse Selector Hub Installation 14-364
Secondary Shaft Disassembly, Inspection, and Reassembly 14-365
Secondary Shaft Ball Bearing, Idle Gear Removal and Installation 14-366
Secondary Shaft 2nd Gear Clearance Inspection 14-367
Secondary Shaft 1st Gear Clearance Inspection 14-369
Idler Gear Shaft Removal and Installation 14-371
Idler Gear/Idler Gear Shaft Replacement 14-372
Clutch Disassembly 14-373
Clutch Inspection 14-377
Clutch Waved-plate Phase Difference Inspection 14-378
Clutch Clearance Inspection 14-379
Clutch Reassembly 14-382

A/T Differential

Component Location Index 14-400
Backlash Inspection 14-400
Carrier Bearing Replacement 14-401
Differential Carrier, Final Driven Gear Replacement 14-401
Oil Seal Replacement 14-402
Carrier Bearing Outer Race Replacement 14-403
Carrier Bearing Preload Inspection 14-405

Special Tools

Ref. No.	Tool Number	Description	Qty
①	07GAB-PF50101 or 07GAB-PF50100	Mainshaft Holder	1
②	07GAD-SD40101	Attachment, 78 x 90 mm	1
③	07GAE-PG40200 or 07GAE-PG4020A	Clutch Spring Compressor Bolt Assembly	1
④	07HAC-PK40102	Housing Puller	1
⑤	07HAJ-PK40201	Preload Inspection Tool	1
⑥	07JAD-PH80101	Oil Seal Driver Attachment	1
⑦	07KAF-PS30200	Bearing Separator	1
⑧	07LAD-PW50601	Attachment, 40 x 50 mm	1
⑨	07LAE-PX40100	Clutch Spring Compressor Attachment	2
⑩	07MAJ-PY4011A	A/T Pressure Hose, 2,210 mm	3
⑪	07MAJ-PY40120	A/T Pressure Hose Adapter	3
⑫	07QAD-P0A0100	Attachment, 42 mm I.D.	1
⑬	07SAZ-001000A	Backprobe Set	2
⑭	07ZAE-PRP0100	Clutch Compressor Attachment	1
⑮	07406-0020400 or 07406-0020401	A/T Oil Pressure Gauge Set w/Panel	1
⑯	07736-A01000B or 07736-A01000A	Adjustable Bearing Puller, 25—40 mm	1
⑰	07746-0010100	Attachment, 32 x 35 mm	1
⑱	07746-0010300	Attachment, 42 x 47 mm	1
⑲	07746-0010400	Attachment, 52 x 55 mm	1
⑳	07746-0010500	Attachment, 62 x 68 mm	1
㉑	07746-0010600	Attachment, 72 x 75 mm	1
㉒	07746-0010800	Attachment, 22 x 24 mm	1
㉓	07746-0030100	Driver, 40 mm I.D.	1
㉔	07746-0030400	Attachment, 35 mm I.D.	1
㉕	07749-0010000	Driver	1
㉖	07947-SD90101	Oil Seal Driver Attachment	1
㉗	07947-ZV00100	Oil Seal Driver Attachment	1

④: If the top arm is too short, replace it with 07SAC-P0Z01001.
⑨: 07HAE-PL50101 may be used to substitute one of these tools.
⑯: Must be used with commercially available 3/8 ′′-16 slide hammer.

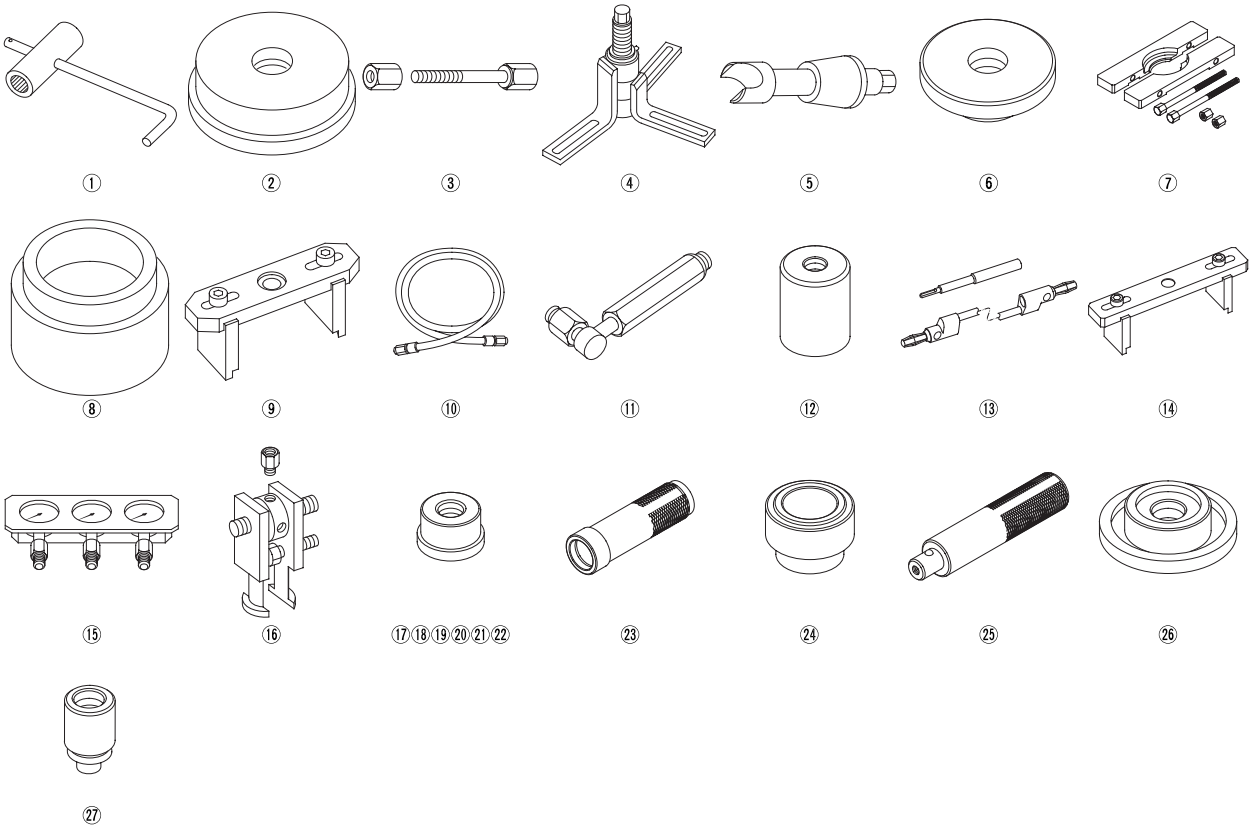

General Troubleshooting Information

2002-2004 Models

How to Check for DTCs with the Honda Diagnostic System/Scan Tool

When the powertrain control module (PCM) senses an abnormality in the input or output systems, the D indicator (A) in the gauge assembly (B) will usually blink.

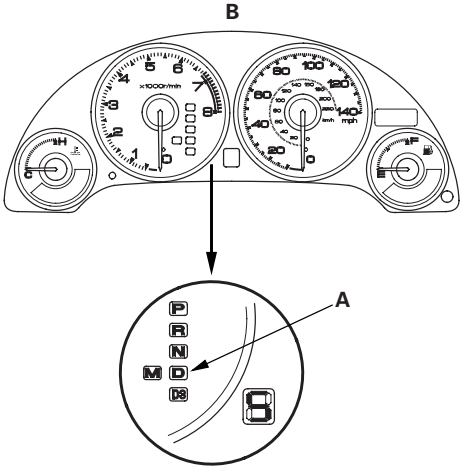

When the Scan Tool or Honda Diagnostic System (HDS) is connected to the data link connector (DLC) (A) (located under the dash behind the center console) and SCS mode is selected, it will indicate the diagnostic trouble code (DTC) when the ignition switch is turned ON (II) and appropriate menu is selected.

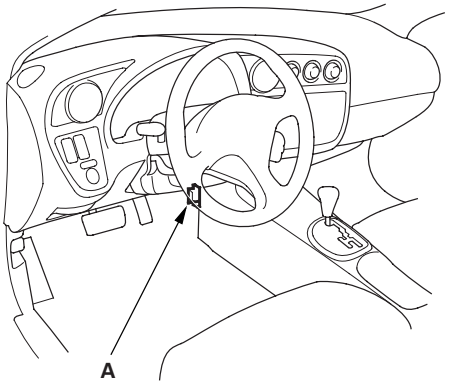

If the D indicator or malfunction indicator lamp (MIL) has been reported on, or if a driveability problem is suspected, follow this procedure:

1. Connect the Scan Tool (conforming to SAE J1978) or HDS to the DLC. (See the Scan Tool or HDS user's manual for specific instructions.
2. Turn the ignition switch ON (II), select A/T system, and observe the DTC in the DTCs menu on the tester screen.
3. Record all fuel and emissions DTCs, A/T DTCs, and freeze data.
4. If there is a fuel and emissions DTC, first check the fuel and emissions system as indicated by the DTC (except for DTC P0700, DTC P0700 means there is one or more A/T DTCs, and no problems were detected in the fuel and emissions circuit of the PCM).
5. Reset the memory with the HDS, Scan Tool or by removing the No. 6 ECU fuse in the under-hood fuse/relay box for more than 10 seconds.
6. Do the PCM idle learn procedure (see page 11-349).
7. Drive the vehicle for several minutes under the same conditions as those indicated by the freeze data, and then recheck for a DTC. If the A/T DTC returns, go to the DTC troubleshooting Index. If the DTC does not return, there was an intermittent problem within the circuit. Make sure all pins and terminals in the circuit are tight.

Symptom Troubleshooting Versus DTC Troubleshooting

Some symptoms will not trigger diagnostic trouble codes (DTCs) or cause the D indicator to blink. If the malfunction indicator lamp (MIL) was reported on or the D indicator has been blinking, check for DTCs. If the vehicle has an abnormal symptom, and there are no DTCs stored, go to the symptom troubleshooting index. Check the list of probable cause(s) for the symptom, in the sequence listed, until you find the problem.

(cont'd)

General Troubleshooting Information (cont'd)

How to Check for DTCs with the SCS Mode (retrieving the flash codes)

When the PCM senses an abnormality in the input or output system, the D indicator (A) in the gauge assembly (B) will usually blink.

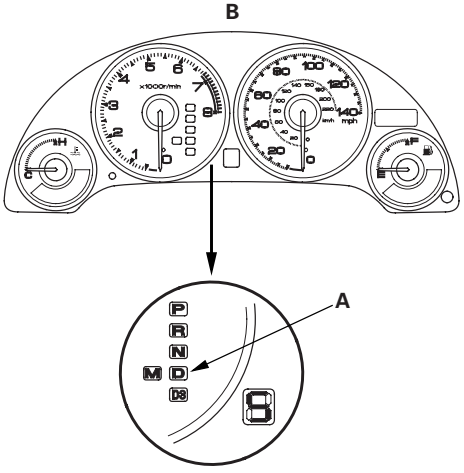

When the D indicator has been reported on, connect the HDS to the DLC (A) (located under the dash behind the center console). Turn the ignition switch ON (II), select SCS mode, then the D indicator will indicate (blink) the DTC.

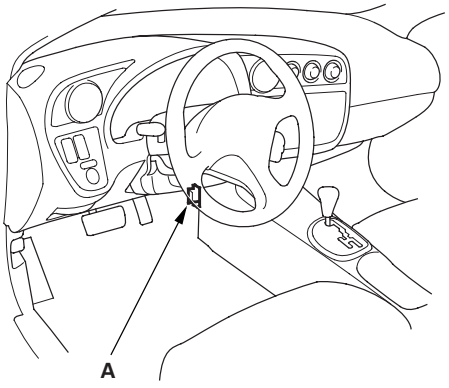

If the D indicator and the MIL come on at the same time, or if a driveability problem is suspected, follow this procedure:

1. Connect the HDS to the DLC. (See the HDS user's manual for specific instructions.)

2. Turn the ignition switch ON (II), select SCS mode, then observe the D indicator in the gauge assembly. Codes 1 through 9 are indicated by individual short blinks. Codes 10 and above are indicated by a series of long and short blinks. One long blink equals 10 short blinks. Add the long and short blinks together to determine the code.

Example: DTC 1

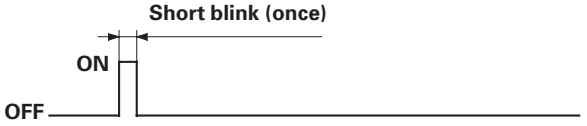

Example: DTC 15

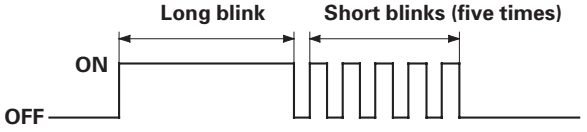

3. Record all fuel and emissions DTCs and A/T DTCs.

4. If there is a fuel and emissions DTC, first check the fuel and emissions system as indicated by the DTC (except DTC 70, DTC 70 means there is one or more A/T DTCs, and no problems were detected in the fuel and emissions circuit of the PCM).

5. Reset the memory with the HDS.

   NOTE: You can also reset the memory by removing the No. 6 ECU fuse in the under-hood fuse/relay box for more than 10 seconds.

6. Do the PCM idle learn procedure (see page 11-349).

7. Drive the vehicle for several minutes at speeds over 30 mph (50 km/h), and then recheck for DTC. If the A/T DTC returns, go to the DTC troubleshooting index. If the DTC does not return, there was an intermittent problem within the circuit. Make sure all pins and terminals in the circuit are tight.

How to Troubleshoot Circuits at the PCM

Special Tools Required
Backprobe set 07SAZ-001000A (two required)

1. Remove the dashboard lower cover (A) under the glove box (B), then you can see the PCM connectors (C).

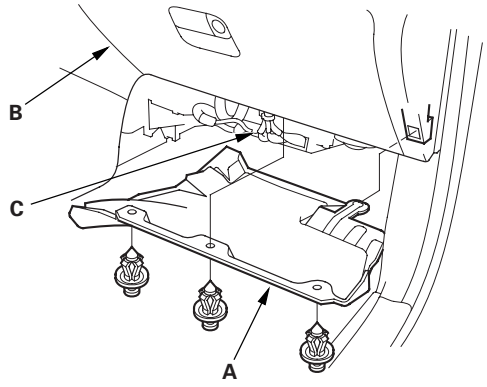

2. Connect the backprobe adapters (A) to the stacking patch cords (B), and connect the cords to a multimeter (C).

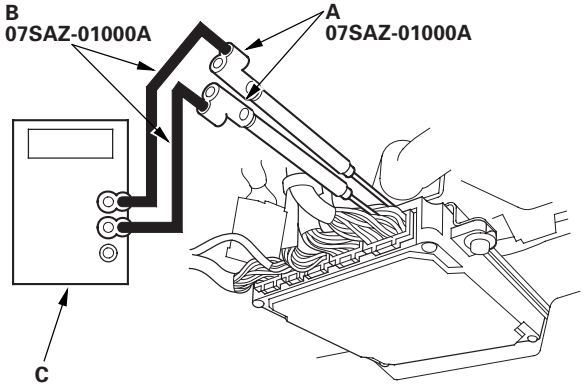

3. Using the wire insulation as a guide for the contoured tip of the backprobe adapter, gently slide the tip into the connector from the wire side until it touches the end of the wire terminal.

4. If you cannot get to the wire side of the connector or the wire side is sealed, disconnect the connector and use the tester probe to probe the connectors from the terminal side. Do not force the probe into the connector.

How to Remove and Install the PCM

1. Remove the dashboard lower cover from under the glove box.

2. Disconnect PCM connectors.

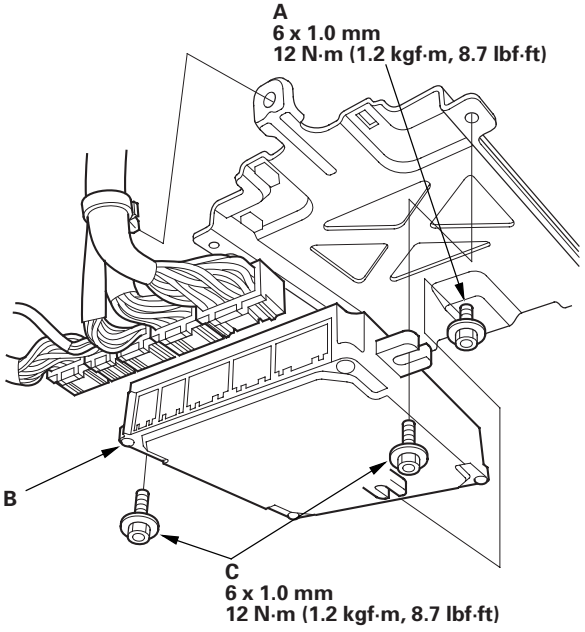

3. Loosen the bolt (A) on the back of the PCM (B), and remove the two bolts (C) and PCM.

4. Install the PCM in the reverse order of the removal.

(cont'd)

General Troubleshooting Information (cont'd)

PCM Reset Procedures

NOTE: After resetting the PCM, do the PCM idle learn procedure (see page 11-349).

1. Turn the ignition switch OFF.
2. Use one of these methods to reset the PCM memory.

- Use the Scan Tool or the HDS to the DLC (A).

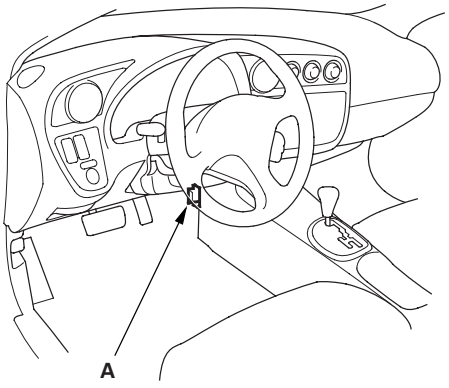

- Remove the No. 6 ECU fuse (A) in the under-hood fuse/relay box (B) for more than 10 seconds.

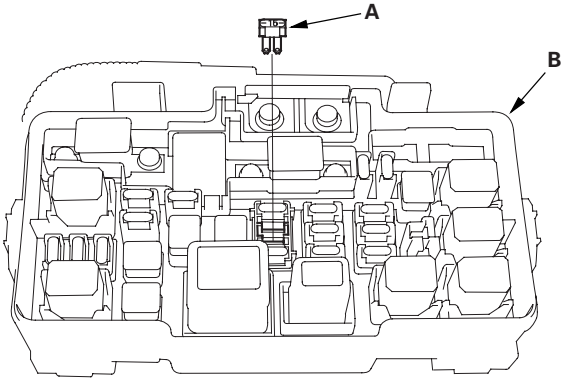

How to End a Troubleshooting Session

This procedure must be done after any troubleshooting.

1. Turn the ignition switch OFF.
2. Reset the PCM using one of these methods:
   - Use the Scan Tool or the HDS, then disconnect the Scan Tool or the HDS from the DLC.
   - Disconnect the Scan Tool or the HDS from the DLC, then reset the PCM by removing the No. 6 ECU fuse in the under-hood relay/fuse box for more than 10 seconds.

     NOTE: After resetting the PCM, do the PCM idle learn procedure (see page 11-349).
3. To verify that the problem is repaired, test-drive the vehicle for several minutes at speeds over 30 mph (50 km/h) or in freeze data range.

PCM Updating and Substitution for Testing

Special Tools Required
Honda Interface Module (HIM) EQS05A35570

Use this procedure when you have to substitute a known-good PCM in a troubleshooting procedure. Update the PCM only if the PCM does not already have the latest software loaded.

NOTE: Do not turn the ignition switch OFF while reprogramming the PCM. If you turn the ignition switch OFF, the PCM can be damaged.

How to Update the PCM

1. Turn the ignition switch ON (II). Do not start the engine.

2. Connect the Honda Interface Module (HIM) to the Data Link Connector (DLC) (A) located under the driver's side of dashboard.

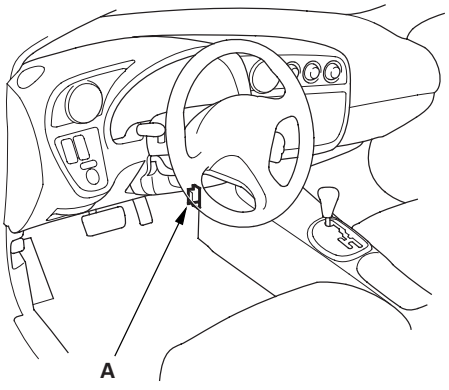

3. Do the PCM update procedure as described on the HIM label and in the PCM update system. If the software in the PCM is the latest version, substitute the PCM.

How to Substitute the PCM

1. Remove the PCM from the vehicle.

2. Install a known-good PCM in the vehicle.

3. Rewrite the immobilizer code with the PCM replacement procedure on the HDS. It allows you to start the engine.

4. After completing your tests, reinstall the original PCM and rewrite the immobilizer code with the PCM replacement procedure on the HDS again.

General Troubleshooting Information (cont'd)

2005-2006 Models

How to Check for DTCs with the Honda Diagnostic System

When the powertrain control module (PCM) senses an abnormality in the input or output systems, the D indicator (A) in the gauge assembly (B) will usually blink.

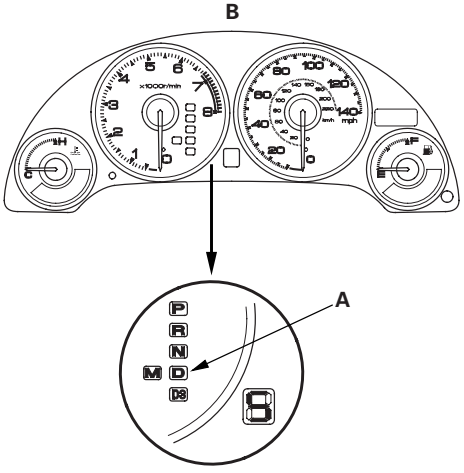

When the Honda diagnostic system (HDS) is connected to the data link connector (DLC) (A) (located under the dash behind the center console), it will indicate the diagnostic trouble code (DTC) when the ignition switch is turned ON (II) and appropriate menu is selected.

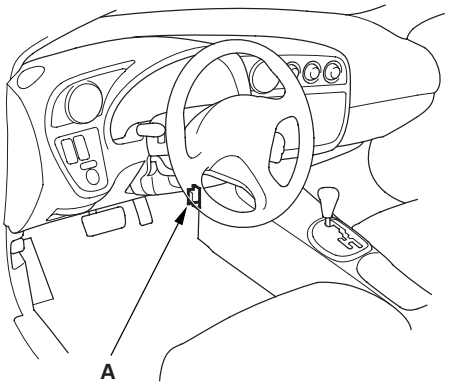

If the D indicator or malfunction indicator lamp (MIL) has been reported on, or if a driveability problem is suspected, follow this procedure:

1. Connect the HDS to the DLC. (See the HDS user's manual for specific instructions.)
2. Turn the ignition switch ON (II), select A/T system, and observe the DTC in the DTCs MENU on the HDS screen.
3. Record all fuel and emissions DTCs, A/T DTCs, and freeze data.
4. If there is a fuel and emissions DTC, first check the fuel and emissions system as indicated by the DTC. (except for DTC P0700, DTC P0700 means there is one or more A/T DTCs, and no problems were detected in the fuel and emissions circuit of the PCM).
5. Clear the DTC and data.
6. Drive the vehicle for several minutes under the same conditions as those indicated by the freeze data, and then recheck for a DTC. If the A/T DTC returns, go to the DTC troubleshooting index. If the DTC does not return, there was an intermittent problem within the circuit. Make sure all pins and terminals in the circuit are tight.

Symptom Troubleshooting Versus DTC Troubleshooting

Some symptoms will not trigger diagnostic trouble codes (DTCs) or cause the D indicator to blink. If the malfunction indicator lamp (MIL) was reported on or the D indicator has been blinking, check for DTCs. If the vehicle has an abnormal symptom, and there are no DTCs stored, go to the symptom troubleshooting index. Check the list of probable cause(s) for the symptom, in the sequence listed, until you find the problem.

How to Check for DTCs with the SCS Mode (retrieving the flash codes)

When the PCM senses an abnormality in the input or output system, the D indicator (A) in the gauge assembly (B) will usually blink.

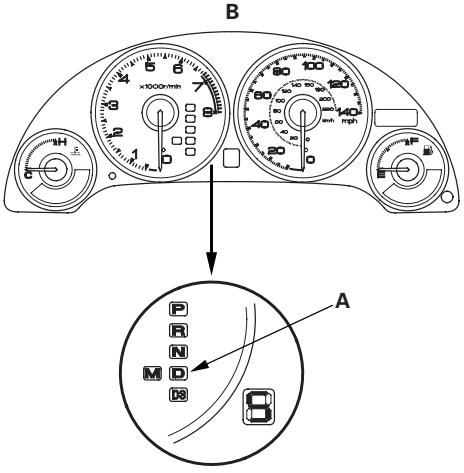

When the D indicator has been reported on, connect the HDS to the DLC (A) (located under the dash behind the center console). Turn the ignition switch ON (II), select SCS mode, then the D indicator will indicate (blink) the DTC.

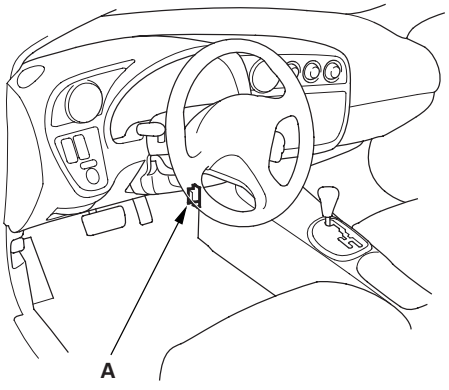

If the D indicator and the MIL come on at the same time, or if a driveability problem is suspected, follow this procedure:

1. Connect the HDS to the DLC. (See the HDS user's manual for specific instructions.)

2. Turn the ignition switch ON (II), select SCS mode, then observe the D indicator in the gauge assembly. Codes 1 through 9 are indicated by individual short blinks. Codes 10 and above are indicated by a series of long and short blinks. One long blink equals 10 short blinks. Add the long and short blinks together to determine the code.

Example: DTC 1-1

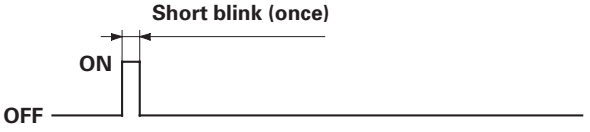

Example: DTC 15-5

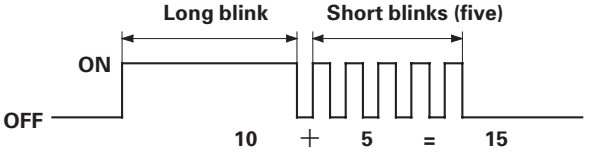

3. Record all fuel and emissions DTCs and A/T DTCs.

4. If there is a fuel and emissions DTC, first check the fuel and emissions system as indicated by the DTC (except DTC 70, DTC 70 means there is one or more A/T DTCs, and no problems were detected in the fuel and emissions circuit of the PCM).

5. Clear the DTC and data.

6. Drive the vehicle for several minutes under the same conditions as those indicated by the freeze data, and then recheck for DTC. If the A/T DTC returns, go to the DTC troubleshooting index. If the DTC does not return, there was an intermittent problem within the circuit. Make sure all pins and terminals in the circuit are tight.

(cont'd)

General Troubleshooting Information (cont'd)

How to Troubleshoot Circuits at the PCM

Special Tools Required
Backprobe set 07SAZ-001000A (two required)

1. Remove the dashboard lower cover (A) under the glove box (B), then you can see the PCM connectors (C).

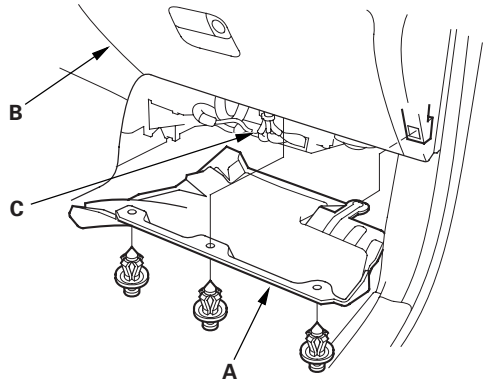

2. Connect the backprobe adapters (A) to the stacking patch cords (B), and connect the cords to a multimeter (C).

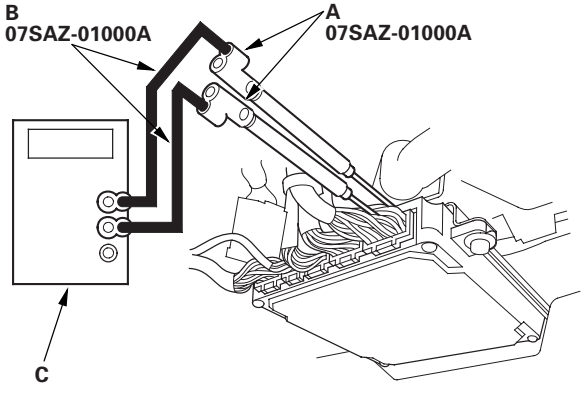

3. Using the wire insulation as a guide for the contoured tip of the backprobe adapter, gently slide the tip into the connector from the wire side until it touches the end of the wire terminal.

4. If you cannot get to the wire side of the connector or the wire side is sealed, disconnect the connector and use the tester probe to probe the connectors from the terminal side. Do not force the probe into the connector.

DTC Clear Procedure

1. Connect the HDS to the DLC.
2. Turn the ignition switch ON (II).
3. Clear the DTC(s) on the HDS screen.

PCM Reset Procedure

1. Connect the HDS to the DLC.
2. Turn the ignition switch ON (II).
3. Reset the PCM with the HDS.
4. Turn the ignition switch OFF.
5. Turn the ignition switch ON (II), and wait 30 seconds.
6. Turn the ignition switch OFF, and disconnect the HDS from the DLC.
7. Do the PCM idle learn procedure (see page 11-349).

OBD Status

The OBD Status shows the current system status of each DTC and all of the parameters. This function is used to see if the technician's repair was successfully finished. The results of diagnostic tests for the DTC are displayed as:

- PASSED: On Board Diagnosis is successfully finished.
- FAILED: On Board Diagnosis has finished but failed.
- NOT COMPLETED: The On Board Diagnosis was running but is out of the Enable conditions of the DTC.

PCM Updating and Substitution for Testing

Special Tools Required
Honda Interface Module (HIM) EQS05A35570

Use this procedure when you have to substitute a known-good PCM in a troubleshooting procedure. Update the PCM only if the PCM does not already have the latest software loaded.

Do not turn the ignition switch OFF while updating the PCM. If you turn the ignition switch OFF, the PCM can be damaged.

How to Update PCM

NOTE:
- To ensure the latest program is installed, update a PCM whenever the PCM is substituted or replaced.
- You cannot update a PCM with the program it already has. It will only accept a new program.
- Before you update the PCM, make sure the vehicle's battery is fully charged.
- To prevent PCM damage, do not operate any electrical system; audio system, brakes, air conditioning, power windows, moonroof, and door locks, during the update.
- If you need to diagnose the Honda interface module (HIM) because the HIM's red (#3) light came on or was flashing during the update, leave the ignition switch in the ON (II) position when you disconnect the HIM from the DLC. This will prevent PCM damage.

1. Turn the ignition switch ON (II). Do not start the engine.

2. Connect the Honda interface module (HIM) to the DLC (A) located under the dash behind the center console.

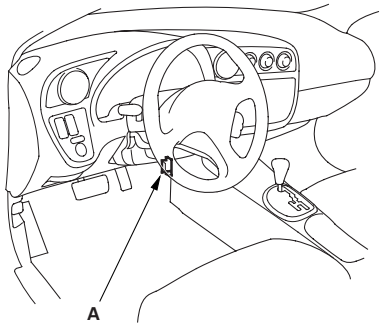

3. Update the PCM according to the procedures described on the HIM label. If the software in the PCM is the latest, replace the PCM.

How to Substitute the PCM

1. Connect the HDS to the DLC.

2. Turn the ignition switch OFF.

3. Jump the SCS line with the HDS.

4. Remove the PCM, and install a known-good PCM.

5. Open the SCS with the HDS.

6. Turn the ignition switch ON (II).

   NOTE: If DTC: P0630 ''VIN Not Programmed or Mismatch'' is stored at this time, ignore it and continue this procedure.

7. Input the VIN to the PCM with the HDS.

8. Rewrite the immobilizer code with the PCM replacement procedure in the HDS; it allows you to start the engine.

9. Reset the PCM with the HDS.

10. Do the PCM idle learn procedure (see page 11-349).

11. Do the CKP pattern learn procedure.

12. After completing your test, reinstall the original PCM and rewrite the immobilizer code with the PCM replacement procedure in the HDS again.

(cont'd)

General Troubleshooting Information (cont'd)

How to Remove and Install the PCM

1. Jump the SCS line with the HDS.
2. Remove the dashboard lower cover from under the glove box.
3. Disconnect PCM connectors.

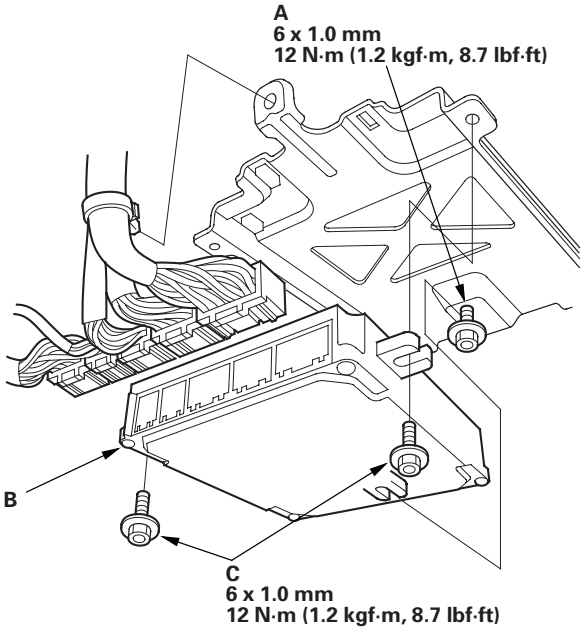

4. Loosen the bolt (A) on the back of the PCM (B), and remove the two bolts (C) and PCM.
5. Install the PCM in the reverse order of the removal.

How to End a Troubleshooting Session

This procedure must be done after any troubleshooting.

1. Turn the ignition switch OFF.
2. Connect the HDS to the DLC.
3. Turn the ignition switch ON (II).
4. Clear the DTC(s) on the HDS screen.
5. Turn the ignition switch ON (II).
6. Start the engine in the P or N position, and warm it up to normal operating temperature (the radiator fan comes on).
7. To verify that the problem is repaired, test-drive the vehicle for several minutes at speeds over 30mph (50 km/h) or in freeze data range.

DTC Troubleshooting Index

2002-2004 Models

NOTE: Record all freeze data and review General Troubleshooting Information (see page 14-3) before you troubleshoot.

DTC * (1)	D Indicator	MIL	Detection Item	Page
P0710 (28) * (2)	Blinks	OFF	ATF temperature sensor	(see page 14-88)
P0715 (15)	Blinks	ON	Input shaft (mainshaft) speed sensor	(see page 14-90)
P0720 (9)	Blinks	ON	Output shaft (countershaft) speed sensor	(see page 14-94)
P0730 (41)	OFF	ON	Shift control system	(see page 14-98)
P0740 (40)	OFF	ON	Lock-up control system	(see page 14-99)
P0745 (76)	Blinks	ON	Mechanical problem in hydraulic system	(see page 14-100)
P0748 (16) * (2)	Blinks	ON	A/T clutch pressure control solenoid valve A	(see page 14-101)
P0750 (70)	Blinks	ON	Mechanical problem in hydraulic system	(see page 14-103)
P0753 (7) * (2)	Blinks	ON	Shift solenoid valve A	(see page 14-105)
P0758 (8) * (2)	Blinks	ON	Shift solenoid valve B	(see page 14-107)
P0763 (22) * (2)	Blinks	ON	Shift solenoid valve C	(see page 14-109)
P0768 (60) * (2)	Blinks	ON	Shift solenoid valve D	(see page 14-111)
P0773 (61) * (2)	Blinks	ON	Shift solenoid valve E	(see page 14-113)
P0775 (77)	Blinks	ON	Mechanical problem in hydraulic system	(see page 14-115)
P0778 (23) * (2)	Blinks	ON	A/T clutch pressure control solenoid valve B	(see page 14-116)
P0780 (45) * (2)	Blinks	ON	Mechanical problem in hydraulic system	(see page 14-118)
P0795 (78)	Blinks	ON	Mechanical problem in hydraulic system	(see page 14-120)
P0798 (29) * (2)	Blinks	ON	A/T clutch pressure control solenoid valve C	(see page 14-122)
P0840 (25)	Blinks	OFF	2nd clutch transmission fluid pressure switch	(see page 14-124)
P0845 (26)	Blinks	OFF	3rd clutch transmission fluid pressure switch	(see page 14-126)
P1705 (5) * (2)	Blinks	ON	Transmission range switch (short circuit)	(see page 14-128)
P1706 (6) * (2)	OFF	ON	Transmission range switch (open)	(see page 14-132)
P1709 (24) * (2)	Blinks	ON	Transmission gear selection switch	(see page 14-134)
P1717 (62) * (2)	Blinks	OFF	Transmission range switch (R position circuit)	(see page 14-137)

* (1): The DTC in parentheses is the flash code the D indicator indicates when the date link connector is connected to the HDS, and in the SCS mode.
* (2): This code is caused by an electrical circuit problem and cannot be caused by a mechanical problem in the transmission.

DTC Troubleshooting Index (cont'd)

2005-2006 Models

NOTE: Record all freeze data and review General Troubleshooting Information (see page 14-3) before you troubleshoot.

DTC * (1)	D Indicator	MIL	Detection Item	Page
P0705 (5-2) * (2)	Blinks	ON	Transmission range switch (multiple shift-position input)	(see page 14-139)
P0706 (6-2) * (2)	OFF	ON	Transmission range switch (open)	(see page 14-147)
P0711 (28-5) * (2)	Blinks	OFF	ATF temperature sensor (range/performance)	(see page 14-150)
P0712 (28-3) * (2)	Blinks	OFF	ATF temperature sensor (short)	(see page 14-151)
P0713 (28-4) * (2)	Blinks	OFF	ATF temperature sensor (open)	(see page 14-152)
P0716 (15-5) * (2)	Blinks	ON	Input shaft (mainshaft) speed sensor (range/ performance)	(see page 14-154)
P0717 (15-3) * (2)	Blinks	ON	Input shaft (mainshaft) speed sensor (no signal input)	(see page 14-158)
P0718 (15-6) * (2)	Blinks	ON	Input shaft (mainshaft) speed sensor (intermittent failure)	(see page 14-162)
P0721 (9-5) * (2)	Blinks	ON	Output shaft (countershaft) speed sensor (range/ performance)	(see page 14-164)
P0722 (9-3) * (2)	Blinks	ON	Output shaft (countershaft) speed sensor (no signal input)	(see page 14-168)
P0723 (9-6) * (2)	Blinks	ON	Output shaft (countershaft) speed sensor (intermittent failure)	(see page 14-172)
P0731 (64-1)	Blinks	OFF	1st gear incorrect ratio	(see page 14-174)
P0732 (64-2)	Blinks	OFF	2nd gear incorrect ratio	(see page 14-175)
P0733 (64-3)	Blinks	OFF	3rd gear incorrect ratio	(see page 14-176)
P0734 (64-4)	Blinks	OFF	4th gear incorrect ratio	(see page 14-177)
P0735 (64-5)	Blinks	OFF	5th gear incorrect ratio	(see page 14-178)
P0741 (40-3)	Blinks	OFF	Torque converter clutch circuit performance or stuck OFF	(see page 14-179)
P0747 (76-4)	Blinks	ON	A/T clutch pressure control solenoid valve A stuck ON	(see page 14-180)
P0752 (70-4)	Blinks	ON	Shift solenoid valve A stuck ON	(see page 14-181)
P0756 (71-3)	Blinks	ON	Shift solenoid valve B stuck OFF	(see page 14-182)
P0757 (71-4)	Blinks	ON	Shift solenoid valve B stuck ON	(see page 14-183)
P0761 (72-3)	Blinks	ON	Shift solenoid valve C stuck OFF	(see page 14-184)

NOTE:
* (1): The DTC in parentheses is the Honda code that you will see when you use the HDS. The first number(s) before the - (hyphen) is the flash code the D indicator indicates when the data link connector is connected to the HDS, and in the SCS mode.
* (2): This code is caused by an electrical circuit problem and cannot be caused by a mechanical problem in the transmission.

2005-2006 Models

NOTE: Record all freeze data and review General Troubleshooting Information (see page 14-3) before you troubleshoot.

DTC * (1)	D Indicator	MIL	Detection Item	Page
P0771 (74-3)	Blinks	ON	Shift solenoid valve E stuck OFF	(see page 14-185)
P0776 (77-3)	Blinks	ON	A/T clutch pressure control solenoid valve B stuck OFF	(see page 14-186)
P0777 (77-4)	Blinks	ON	A/T clutch pressure control solenoid valve B stuck ON	(see page 14-187)
P0780 (45-1)	Blinks	ON	Shift control system	(see page 14-188)
P0796 (78-3)	Blinks	ON	A/T clutch pressure control solenoid valve C stuck OFF	(see page 14-189)
P0797 (78-4)	Blinks	ON	A/T clutch pressure control solenoid valve C stuck ON	(see page 14-190)
P0812 (62-2) * (2)	Blinks	OFF	Transmission range switch ATP RVS switch	(see page 14-191)
P0815 (24-5) * (2)	Blinks	ON	Transmission gear selection switch upshift switch (short or stuck ON)	(see page 14-193)
P0816 (24-6) * (2)	Blinks	ON	Transmission gear selection switch downshift switch (short or stuck ON)	(see page 14-195)
P0842 (25-3) * (2)	Blinks	ON	2nd clutch transmission fluid pressure switch (short or stuck ON)	(see page 14-197)
P0843 (25-4) * (2)	Blinks	ON	2nd clutch transmission fluid pressure switch (open or stuck OFF)	(see page 14-199)
P0847 (26-3) * (2)	Blinks	OFF	3rd clutch transmission fluid pressure switch (short or stuck ON)	(see page 14-201)
P0848 (26-4) * (2)	Blinks	OFF	3rd clutch transmission fluid pressure switch (open or stuck OFF)	(see page 14-203)
P0957 (24-3) * (2)	Blinks	ON	Transmission gear selection switch (short or stuck ON)	(see page 14-205)
P0958 (24-4) * (2)	Blinks	ON	Transmission gear selection switch (open or stuck OFF)	(see page 14-207)
P0962 (16-3) * (2)	Blinks	ON	A/T clutch pressure control solenoid valve A (open/ short)	(see page 14-209)
P0963 (16-4) * (2)	Blinks	ON	A/T clutch pressure control solenoid valve A	(see page 14-211)
P0966 (23-3) * (2)	Blinks	ON	A/T clutch pressure control solenoid valve B (open/ short)	(see page 14-213)
P0967 (23-4) * (2)	Blinks	ON	A/T clutch pressure control solenoid valve B	(see page 14-215)
P0970 (29-3) * (2)	Blinks	ON	A/T clutch pressure control solenoid valve C (open/ short)	(see page 14-217)
P0971 (29-4) * (2)	Blinks	ON	A/T clutch pressure control solenoid valve C	(see page 14-219)
P0973 (7-3) * (2)	Blinks	ON	Shift solenoid valve A (short)	(see page 14-221)

NOTE:

* (1): The DTC is parentheses is the Honda code that you will see when you use the HDS. The first number(s) before the - (hyphen) is the flash code the D indicator indicates when the data link connector is connected to the HDS, and in the SCS mode.
* (2): This code is caused by an electrical circuit problem and cannot be caused by a mechanical problem in the transmission.

(cont'd)

DTC Troubleshooting Index (cont'd)

2005-2006 Models

NOTE: Record all freeze data and review General Troubleshooting Information (see page 14-3) before you troubleshoot.

DTC * (1)	D Indicator	MIL	Detection Item	Page
P0974 (7-4) * (2)	Blinks	ON	Shift solenoid valve A (open)	(see page 14-223)
P0976 (8-3) * (2)	Blinks	ON	Shift solenoid valve B (short)	(see page 14-225)
P0977 (8-4) * (2)	Blinks	ON	Shift solenoid valve B (open)	(see page 14-227)
P0979 (22-3) * (2)	Blinks	ON	Shift solenoid valve C (short)	(see page 14-229)
P0980 (22-4) * (2)	Blinks	ON	Shift solenoid valve C (open)	(see page 14-231)
P0982 (60-3) * (2)	Blinks	ON	Shift solenoid valve D (short)	(see page 14-233)
P0983 (60-4) * (2)	Blinks	ON	Shift solenoid valve D (open)	(see page 14-235)
P0985 (61-3) * (2)	Blinks	ON	Shift solenoid valve E (short)	(see page 14-237)
P0986 (61-4) * (2)	Blinks	ON	Shift solenoid valve E (open)	(see page 14-239)
P1730 (45-2)	Blinks	ON	Shift control system • Shift solenoid valves A or D stuck OFF • Shift solenoid valve B stuck ON • Shift valves A, B, or D stuck	(see page 14-241)
P1731 (45-3)	Blinks	ON	Shift control system • Shift solenoid valve E stuck ON • Shift valve E stuck • A/T clutch pressure control solenoid valve A stuck OFF	(see page 14-243)
P1732 (45-4)	Blinks	ON	Shift control system • Shift solenoid valves B or C stuck ON • Shift valves B or C stuck	(see page 14-245)
P1733 (45-5)	Blinks	ON	Shift control system • Shift solenoid valve D stuck ON • Shift valve D stuck • A/T clutch pressure control solenoid valve C stuck OFF	(see page 14-247)
P1734 (45-6)	Blinks	ON	Shift control system • Shift solenoid valves B or C stuck OFF • Shift valves B or C stuck	(see page 14-249)

NOTE:
* (1): The DTC is parentheses is the Honda code that you will see when you use the HDS. The first number(s) before the - (hyphen) is the flash code the D indicator indicates when the data link connector is connected to the HDS, and in the SCS mode.
* (2): This code is caused by an electrical circuit problem and cannot be caused by a mechanical problem in the transmission.

Symptom Troubleshooting Index

Symptom	Probable cause(s)	Notes
When you turn the ignition switch ON (II), the D indicator comes on and stays on in all shift lever positions, or it never comes on at all	Communication line between multiplex control unit and gauge assembly defective	Check if the MIL indicates the code for the communication line between the multiplex control unit and gauge assembly (see page 22-189).
D3 or M indicator does not work	Communication line between multiplex control unit and gauge assembly defective	Check if the MIL indicates the code for the communication line between the multiplex control unit and gauge assembly (see page 22-189).
Shift lever cannot be moved from P while you're pressing on the brake pedal	A problem in the shift lock system (interlock system)	Check the interlock system-shift lock system circuit (see page 14-313).
Shift lever cannot pass through R from N	A problem in the reverse lock system (interlock system)	Check the interlock system-reverse lock system circuit (see page 14-321).
Ignition switch cannot be moved from ACC (I) to LOCK (0) (key is pushed in, shift lever in P)	A problem in the key interlock system (interlock system)	Check the interlock system-key interlock system circuit (see page 14-323).

(cont'd)

Symptom Troubleshooting Index (cont'd)

Symptom	Probable cause(s)	Notes
Engine runs, but vehicle does not move in any gear	1. Low ATF level 2. Shift cable broken or out of adjustment 3. Connection between the shift cable and transmission or body is worn 4. ATF pump worn or binding 5. Regulator valve stuck or spring worn 6. ATF strainer clogged 7. Mainshaft worn or damaged 8. Final gears worn or damaged 9. Transmission-to-engine assembly error 10. Axle disengaged	• Check the ATF level, and check the ATF cooler lines for leakage and loose connections. If necessary, clean the ATF cooler lines. • Check for a loose shift cable at the shift lever and the transmission control shaft. • Improper alignment of ATF pump and torque converter housing may cause ATF pump seizure. The symptoms are mostly an rpm-related ticking noise or a high pitched squeak. • Check the line pressure. • Be careful not to damage the torque converter housing when replacing the main ball bearing. You may also damage the ATF pump when you torque down the main valve body. This will result in ATF pump seizure if not detected. Use the proper tools. • Install the main seal flush with the torque converter housing. If you push it into the torque converter housing until it tops out, it will block the fluid return passage and result in damage. • Check the ATF strainer for debris. If the ATF strainer is clogged with particles of steel or aluminum, inspect the ATF pump. If the ATF pump is OK, find the damaged components that caused debris. If no cause for contamination is found, replace the torque converter. • Inspect the differential pinion shaft for wear under the pinion gears. If the differential pinion shaft is worn, overhaul the differential assembly, replace the ATF strainer, thoroughly clean the transmission, and clean the torque converter, cooler, and lines.
Vehicle moves in R, but not in D, D3, or 1st in M	1. 1st accumulator defective 2. 1st gears worn or damaged 3. 1st clutch defective	• Check the 1st clutch pressure. • Inspect the clutch piston, clutch piston check valve, and O-rings. Check the spring retainer and retainer seal for wear and damage. Inspect the clutch-end-plate-to-top-disc clearance. If the clearance is out of tolerance, inspect the clutch discs and plates for wear and damage. If the discs are worn or damaged, replace the discs as a set. Inspect the clutch waved-plate height. If the height is out of tolerance, replace the waved-plate. If the discs and plates are OK, adjust the clearance with the clutch and plate. • Inspect the 1st clutch feed pipe. If the 1st clutch feed pipe is scored, replace the end cover. • Replace the secondary shaft if the bushing for the 1st clutch feed pipe is loose or damaged.

Symptom	Probable cause(s)	Notes
Vehicle moves in D, D3, and R, but not in 2nd in M	1. 2nd accumulator defective 2. 2nd gears worn or damaged 3. 2nd clutch defective	• Check the 2nd clutch pressure. • Inspect the clutch piston, clutch piston check valve, and O-rings. Check the spring retainer and retainer seal for wear and damage. Inspect the clutch end-plate-to-top-disc clearance. If the clearance is out of tolerance, inspect the clutch discs and plates for wear and damage. If the discs are worn or damaged, replace the discs as a set. Inspect the clutch waved-plate height. If the height is out of tolerance, replace the waved-plate. If the discs and plates are OK, adjust the clearance with the clutch end plate.
Vehicle moves in D, D3, and M, but not in R	1. Shift solenoid valve E defective 2. Shift fork shaft stuck 3. Shift valve E defective 4. 4th/reverse accumulator defective 5. 4th clutch defective 6. Reverse gears worn or damaged	• Check the D indicator, and check for loose connectors. • Inspect the shift solenoid valve E for seizure, and O-rings for wear and damage. • Check for a missing shift fork bolt on the shift fork shaft. • Check the 4th clutch pressure. • Inspect the clutch piston, clutch piston check valve, and O-rings. Check the spring retainer and retainer seal for wear and damage. Inspect the clutch-end-plate-to-top-disc clearance. If the clearance is out of tolerance, inspect the clutch discs and plates for wear and damage. If the discs are worn or damaged, replace the discs as a set. Inspect the clutch waved-plate height. If the height is out of tolerance, replace the waved-plate. If the discs and plates are OK, adjust the clearance with the clutch end plate. • Inspect the reverse selector gear teeth chamfers, and inspect engagement teeth chamfers of the countershaft 4th gear and reverse gear. Replace the reverse gears and the reverse selector if they are worn or damaged. If the transmission makes a clicking, grinding, or whirring noise, also replace the mainshaft 4th gear, reverse idler gear, and countershaft 4th gear.
Poor acceleration; flares when starting off in D, D3, R, and M; stall speed high in D, D3, and M in 1st and 2nd	1. Low ATF level 2. Shift cable broken or out of adjustment 3. ATF pump worn or binding 4. Regulator valve stuck or spring worn 5. ATF strainer clogged 6. Torque converter check valve defective	• Check the ATF level, and check the ATF cooler lines for leakage and loose connections. If necessary, clean the ATF cooler lines. • Check for a loose shift cable at the shift lever and the transmission control shaft. • Improper alignment of ATF pump and torque converter housing may cause ATF pump seizure. The symptoms are mostly an rpm-related ticking noise or a high pitched squeak. • Check the ATF strainer for clogging. If the ATF strainer is clogged with particles of steel or aluminum, inspect the ATF pump. If the ATF pump is OK, find the damaged components that caused debris, and no cause for contamination is found, replace the torque converter.

(cont'd)

Symptom Troubleshooting Index (cont'd)

Symptom	Probable cause(s)	Notes
Poor acceleration; flares when starting off in D, D3, R, and M; stall speed high when starting off in M in 2nd	2nd clutch defective	• Check the 2nd clutch pressure. • Inspect the clutch piston, clutch piston check valve, and O-rings. Check the spring retainer and retainer seal for wear and damage. Inspect the clutch-end-plate-to-top-disc clearance. If the clearance is out of tolerance, inspect the clutch discs and plates for wear and damage. If the discs are worn or damaged, replace the discs as a set. Inspect the clutch waved-plate height. If the height is out of tolerance, replace the waved-plate. If the discs and plates are OK, adjust the clearance with the clutch end plate.
Poor acceleration; flares when starting off in D, D3, R, and M; stall speed high in R	1. Shift cable broken or out of adjustment 2. 4th clutch defective	• Check for a loose shift cable at the shift lever and the transmission control shaft. • Check the 4th clutch pressure in the D and R positions. • Inspect the clutch piston, clutch piston check valve, and O-rings. Check the spring retainer and retainer seal for wear and damage. Inspect the clutch-end-plate-to-top-disc clearance. If the clearance is out of tolerance, inspect the clutch discs and plates for wear and damage. If the discs are worn or damaged, replace the discs as a set. Inspect the clutch waved-plate height. If the height is out of tolerance, replace the waved-plate. If the discs and plates are OK, adjust the clearance with the clutch end plate.
Poor acceleration; flares when starting off in D, D3, R, and M; stall speed low in D, D3, and M in 1st and 2nd	1. Shift solenoid valve E defective 2. Torque converter one-way clutch defective 3. Engine output low 4. Torque converter clutch piston defective 5. Lock-up shift valve defective	• Check the D indicator, and check for loose connectors. • Inspect the shift solenoid valve E for seizure, and O-ring for wear and damage. • Replace the torque converter.
Poor acceleration; flares when starting off in D, D3, R, and M; stall speed low in R	1. Torque converter one-way clutch defective 2. Engine output low 3. Torque converter clutch piston defective 4. Lock-up shift valve defective	Replace the torque converter.

Symptom	Probable cause(s)	Notes
Engine idle vibration	1. Low ATF level 2. Shift solenoid valve E defective 3. Drive plate defective or transmission misassembled 4. Engine output low 5. Torque converter clutch piston defective 6. ATF pump worn or binding 7. Lock-up shift valve defective 8. Misadjusted engine and transmission mounts	• Check the ATF level, and check the ATF cooler lines for leakage and loose connections. If necessary, clean the ATF cooler lines. • Improper alignment of ATF pump and torque converter housing may cause ATF pump seizure. The symptoms are mostly an rpm-related ticking noise or a high pitched squeak. • Inspect the ATF strainer for clogged with particles of steel or aluminum. If the ATF strainer is clogged, replace it, and clean the torque converter, cooler, and lines. • Check the D indicator, and check for loose connectors. Inspect the shift solenoid valve E for seizure, and O-rings for wear and damage. • Check for a misinstalled/damaged drive plate. • Set idle rpm in gear to the specified idle speed. If still no good, adjust the engine and transmission mount. • Replace the torque converter.
Vehicle moves in N	1. Excessive ATF 2. Foreign material in separator plate orifice 3. Relief valve defective 4. 1st clutch defective 5. 2nd clutch defective 6. 3rd clutch defective 7. 4th clutch defective 8. 5th clutch defective 9. Clutch-end-plate-to-top-disc clearance incorrect 10. Needle bearing seized, worn, or damaged 11. Thrust washer seized up, worn, or damaged	• Check the ATF level, and drain any excess. • Check if the ATF strainer is clogged. If the ATF strainer is clogged with particles of steel or aluminum, inspect the ATF pump. If the ATF pump is OK, find the damaged components that caused debris, and if no cause for contamination is found, replace the torque converter. • Check the 1st, 2nd, 3rd, 4th, and 5th clutch pressures. • Inspect the clutch piston, clutch piston check valve, and O-rings. Check the spring retainer and retainer seal for wear and damage. Inspect the clutch-end-plate-to-top-disc clearance. If the clearance is out of tolerance, inspect the clutch discs and plates for wear and damage. If the discs are worn or damaged, replace the discs as a set. Inspect the clutch waved-plate height. If the height is out of tolerance, replace the waved-plate. If the discs and plates are OK, adjust the clearance with the clutch end plate. • Inspect the 1st clutch feed pipe. If the 1st clutch feed pipe is scored, replace the end cover. • Inspect the 3rd clutch feed pipe. If the 3rd clutch feed pipe is scored, replace it and O-ring under the feed pipe guide. • Replace the secondary shaft if the bushing for the 1st or 3rd clutch feed pipe is loose or damaged. • Inspect the 5th clutch feed pipe. If the 5th clutch feed pipe is scored, replace it and O-ring under the feed pipe guide. • Replace the mainshaft if the bushing for the 5th clutch feed pipe is loose or damaged.

(cont'd)

Symptom Troubleshooting Index (cont'd)

Symptom	Probable cause(s)	Notes
Late shift after shifting from N to D or D3, or excessive shock when shifting	1. Shift solenoid valve E defective 2. A/T clutch pressure control solenoid valve A defective 3. A/T clutch pressure control solenoid valve B defective 4. A/T clutch pressure control solenoid valve C defective 5. Shift cable broken or out of adjustment 6. Connection between the shift cable and transmission or body is worn 7. Input shaft (mainshaft) speed sensor defective 8. Output shaft (countershaft) speed sensor defective 9. ATF temperature sensor defective 10. Foreign material in separator plate orifice 11. Servo control valve defective 12. 1st accumulator defective 13. 1st check ball stuck 14. Lock-up shift valve defective 15. 1st clutch defective	• Check the D indicator, and check for loose connectors. • Inspect the solenoid valve filter/gasket and O-rings for wear and damage, and inspect the solenoid valves for seizure. • Check the input shaft (mainshaft) speed sensor and output shaft (countershaft) speed sensor installation. • Check for a loose shift cable at the shift lever and the transmission control shaft. • Check the 1st clutch pressure. • Inspect the clutch piston, clutch piston check valve, and O-rings. Check the spring retainer and retainer seal for wear and damage. Inspect the clutch-end-plate-to-top-disc clearance. If the clearance is out of tolerance, inspect the clutch discs and plates for wear and damage. If the discs are worn or damaged, replace the discs as a set. Inspect the clutch waved-plate height. If the height is out of tolerance, replace the waved-plate. If the discs and plates are OK, adjust the clearance with the clutch end plate. • Inspect the 1st clutch feed pipe. If the 1st clutch feed pipe is scored, replace the end cover.
Late shift after shifting from N to R, or excessive shock when shifting	1. Shift solenoid valve E defective 2. A/T clutch pressure control solenoid valve A defective 3. Shift cable broken or out of adjustment 4. Connection between the shift cable and transmission or body is worn 5. Input shaft (mainshaft) speed sensor defective 6. Output shaft (countershaft) speed sensor defective 7. ATF temperature sensor defective 8. Shift fork shaft stuck 9. Foreign material in separator plate orifice 10. Shift valve E defective 11. 4th/reverse accumulator defective 12. Lock-up shift valve defective 13. 4th clutch defective	• Check the D indicator, and check for loose connectors. • Inspect the solenoid valve filter/gasket and O-rings for wear and damage, and inspect the solenoid valves for seizure. • Check the input shaft (mainshaft) speed sensor and output shaft (countershaft) speed sensor installation. • Check for a loose shift cable at the shift lever and the transmission control shaft. • Inspect the clutch piston, clutch piston check valve, and O-rings. Check the spring retainer and retainer seal for wear and damage. Inspect the clutch-end-plate-to-top-disc clearance. If the clearance is out of tolerance, inspect the clutch discs and plates for wear and damage. If the discs are worn or damaged, replace the discs as a set. Inspect the clutch waved-plate height. If the height is out of tolerance, replace the waved-plate. If the discs and plates are OK, adjust the clearance with the clutch end plate. • Check for a missing shift fork bolt on the shift fork shaft. • Check the 4th clutch pressure. • Inspect the servo valve and O-ring.

Symptom	Probable cause(s)	Notes
The transmission does not shift	1. Input shaft (mainshaft) speed sensor defective 2. Output shaft (countershaft) speed sensor defective	• Check the D indicator, and check for loose connectors. • Check the input shaft (mainshaft) and output shaft (countershaft) speed sensor installation.
Excessive shock or flares on all upshifts and downshifts	1. A/T clutch pressure control solenoid valve B defective 2. A/T clutch pressure control solenoid valve C defective 3. Input shaft (mainshaft) speed sensor defective 4. Output shaft (countershaft) speed sensor defective 5. ATF temperature sensor defective 6. Foreign material in separator plate orifice	• Check the D indicator, and check for loose connectors. • Inspect the solenoid valve filter/gasket and O-rings for wear and damage, and inspect the solenoid valves for seizure. • Check the input shaft (mainshaft) speed sensor and output shaft (countershaft) speed sensor installation.
Excessive shock or flares on 1-2 upshift or 2-1 downshift	1. Shift solenoid valve E defective 2. A/T clutch pressure control solenoid valve A defective 3. A/T clutch pressure control solenoid valve B defective 4. A/T clutch pressure control solenoid valve C defective 5. 2nd clutch transmission fluid pressure switch defective 6. Foreign material in separator plate orifice 7. 1st accumulator defective 8. 2nd accumulator defective 9. 1st check ball stuck 10. 2nd check ball stuck 11. Lock-up shift valve defective 12. 1st clutch defective 13. 2nd clutch defective	• Check the D indicator, and check for loose connectors. • Inspect the solenoid valve filter/gasket and O-rings for wear and damage, and inspect the solenoid valves for seizure. • Check the 1st and 2nd clutch pressures. • Inspect the clutch piston, clutch piston check valve, and O-rings. Check the spring retainer and retainer seal for wear and damage. Inspect the clutch-end-plate-to-top-disc clearance. If the clearance is out of tolerance, inspect the clutch discs and plates for wear and damage. If the discs are worn or damaged, replace the discs as a set. Inspect the clutch waved-plate height. If the height is out of tolerance, replace the waved-plate. If the discs and plates are OK, adjust the clearance with the clutch end plate. • Inspect the 1st clutch feed pipe. If the 1st clutch feed pipe is scored, replace the end cover. • Replace the secondary shaft if the bushing for the 3rd clutch feed pipe is loose or damaged.

(cont'd)

Symptom Troubleshooting Index (cont'd)

Symptom	Probable cause(s)	Notes
Excessive shock or flares on 2-3 upshift or 3-2 downshift	1. A/T clutch pressure control solenoid valve B defective 2. A/T clutch pressure control solenoid valve C defective 3. 3rd clutch transmission fluid pressure switch defective 4. Foreign material in separator plate orifice 5. 2nd accumulator defective 6. 3rd accumulator defective 7. 2nd check ball stuck 8. 2nd clutch defective 9. 3rd clutch defective	• Check the D indicator, and check for loose connectors. • Inspect the solenoid valve filter/gasket and O-rings for wear and damage, and inspect the solenoid valves for seizure. • Check the 2nd and 3rd clutch pressures. • Inspect the clutch piston, clutch piston check valve, and O-rings. Check the spring retainer and retainer seal for wear and damage. Inspect the clutch-end-plate-to-top-disc clearance. If the clearance is out of tolerance, inspect the clutch discs and plates for wear and damage. If the discs are worn or damaged, replace the discs as a set. Inspect the clutch waved-plate height. If the height is out of tolerance, replace the waved-plate. If the discs and plates are OK, adjust the clearance with the clutch end plate. • Inspect the 3rd clutch feed pipe. If the 3rd clutch feed pipe is scored, replace it and O-ring under the feed pipe guide. • Replace the secondary shaft if the bushing for the 3rd clutch feed pipe is loose or damaged.
Excessive shock or flares on 3-4 upshift or 4-3 downshift	1. A/T clutch pressure control solenoid valve B defective 2. A/T clutch pressure control solenoid valve C defective 3. Foreign material in separator plate orifice 4. 3rd accumulator defective 5. 4th accumulator defective 6. 3rd clutch defective 7. 4th clutch defective	• Check the D indicator, and check for loose connectors. • Inspect the solenoid valve filter/gasket and O-rings for wear and damage, and inspect the solenoid valves for seizure. • Check the 3rd and 4th clutch pressures. • Inspect the clutch piston, clutch piston check valve, and O-rings. Check the spring retainer and retainer seal for wear and damage. Inspect the clutch-end-plate-to-top-disc clearance. If the clearance is out of tolerance, inspect the clutch discs and plates for wear and damage. If the discs are worn or damaged, replace the discs as a set. Inspect the clutch waved-plate height. If the height is out of tolerance, replace the waved-plate. If the discs and plates are OK, adjust the clearance with the clutch end plate. • Inspect the 3rd clutch feed pipe. If the 3rd clutch feed pipe is scored, replace it and O-ring under the feed pipe guide. • Replace the secondary shaft if the bushing for the 3rd clutch feed pipe is loose or damaged.

Symptom	Probable cause(s)	Notes
Excessive shock or flares on 4-5 upshift or 5-4 downshift	1. A/T clutch pressure control solenoid valve B defective 2. A/T clutch pressure control solenoid valve C defective 3. Foreign material in separator plate orifice 4. 4th accumulator defective 5. 5th accumulator defective 6. 4th clutch defective 7. 5th clutch defective	• Check the D indicator, and check for loose connectors. • Inspect the solenoid valve filter/gasket and O-rings for wear and damage, and inspect the solenoid valves for seizure. • Check the 4th and 5th clutch pressures. • Inspect the clutch piston, clutch piston check valve, and O-rings. Check the spring retainer and retainer seal for wear and damage. Inspect the clutch-end-plate-to-top-disc clearance. If the clearance is out of tolerance, inspect the clutch discs and plates for wear and damage. If the discs are worn or damaged, replace the discs as a set. Inspect the clutch waved-plate height. If the height is out of tolerance, replace the waved-plate. If the discs and plates are OK, adjust the clearance with the clutch end plate. • Inspect the 5th clutch feed pipe. If the 5th clutch feed pipe is scored, replace it and O-ring under the feed pipe guide. • Replace the mainshaft if the bushing for the 5th clutch feed pipe is loose or damaged.
Noise from transmission in all shift lever positions	1. ATF pump worn or binding 2. Mainshaft bearing, countershaft bearing or secondary shaft bearing defective	• Improper alignment of ATF pump and torque converter housing may cause ATF pump seizure. The symptoms are mostly an rpm-related ticking noise or a high pitched squeak. • Be careful not to damage the torque converter housing when replacing the main ball bearing. You may also damage the ATF pump when you torque down the main valve body. This will result in ATF pump seizure if not detected. Use the proper tools. • Install the main seal flush with the torque converter housing. If you push it into the torque converter housing until it tops out, it will block the fluid return passage and result in damage. • Inspect the ATF strainer is clogged with particles of steel or aluminum. If the ATF strainer is clogged, replace it, and clean the torque converter, cooler, and lines. • Inspect the mainshaft and countershaft for wear or damage.
Vehicle does not accelerate above 31 mph (50 km/h)	Torque converter one-way clutch defective	Replace the torque converter.
Vibration in all shift lever positions	Drive plate defective or transmission misassembled	• Check for a misinstalled/damaged drive plate. • Set idle rpm in gear to the specified idle speed. If still no good, adjust the engine and transmission mounts.

(cont'd)

Symptom Troubleshooting Index (cont'd)

Symptom	Probable cause(s)	Notes
Shift lever does not operate smoothly	1. Transmission range switch defective or out of adjustment 2. Shift cable broken or out of adjustment 3. Connection between the shift cable and transmission or body is worn	• Check the D indicator, and check for loose connectors. • Inspect the transmission range switch for operation. • Check for a loose shift cable at the shift lever and the transmission control shaft.
Transmission does not shift into P	1. Shift cable broken or out of adjustment 2. Connection between the shift cable and transmission or body is worn 3. Park mechanism defective	• Check for a loose shift cable at the shift lever and the transmission control shaft. • Check the park pawl spring installation and the park lever spring installation. If installation is incorrect, install the spring correctly. Make sure that the park lever stop is not installed upside down. Check the distance between the park pawl shaft and park lever roller pin. If the distance is out of tolerance, adjust the distance with the park lever stop.
Torque converter clutch does not disengage	1. Shift solenoid valve E defective 2. A/T clutch pressure control solenoid valve A defective 3. Torque converter clutch piston defective 4. Lock-up shift valve defective 5. Lock-up control valve defective	• Check the D indicator, and check for loose connectors. • Inspect the solenoid valve filter/gasket and O-rings for wear and damage, and inspect the solenoid valves for seizure. • Replace the torque converter.
Torque converter clutch does not operate smoothly	1. Shift solenoid valve E defective 2. A/T clutch pressure control solenoid valve A defective 3. Torque converter clutch piston defective 4. Torque converter check valve defective 5. Lock-up shift valve defective 6. Lock-up control valve defective	• Check the D indicator, and check for loose connectors. • Inspect the solenoid valve filter/gasket and O-ings for wear and damage, and inspect the solenoid valves for seizure. • Replace the torque converter.

Symptom	Probable cause(s)	Notes
Torque converter clutch does not engage	1. Shift solenoid valve E defective 2. A/T clutch pressure control solenoid valve A defective 3. Input shaft (mainshaft) speed sensor defective 4. Output shaft (countershaft) speed sensor defective 5. Torque converter clutch piston defective 6. Torque converter check valve defective 7. Lock-up shift valve defective 8. Lock-up control valve defective	• Check the D indicator, and check for loose connectors. • Inspect the solenoid valve filter/gasket and O-rings for wear and damage, and inspect the solenoid valves for seizure. • Replace the torque converter. • Check the input shaft (mainshaft) speed sensor and output shaft (countershaft) speed sensor installation.
A/T gear position indicator does not indicate shift lever positions	1. Transmission range switch defective or out of adjustment 2. Shift cable broken or out of adjustment 3. Connection between the shift cable and transmission or body is worn	• Check the D indicator, and check for loose connectors. • Inspect the transmission range switch operation. • Check for a loose shift cable at the shift lever and the transmission control shaft.
Speedometer and odometer do not work	Output shaft (countershaft) speed sensor defective	• Check the D indicator, and check for loose connectors. • Inspect the transmission range switch operation. • Check the output shaft (countershaft) speed sensor installation.
The engine does not rev to high rpm, and the transmission upshifts at low rpm	VTEC rocker arms defective	Check the engine rocker arms.

System Description

General Operation

The automatic transmission is a combination of a 3-element torque converter and triple-shaft electronically controlled unit which provides 5 speeds forward and 1 reverse. The entire unit is positioned in line with the engine.

Torque Converter, Gears, and Clutches
The torque converter consists of a pump, turbine, and stator assembly in a single unit. The converter housing (pump) is connected to the engine crankshaft and turn as the engine turns. Around the outside of the torque converter is a ring gear which meshes with the starter pinion when the engine is being started. The entire torque converter assembly serves as a flywheel while transmitting power to the transmission mainshaft, the transmission has three parallel shafts; the mainshaft, the countershaft and the secondary shaft. The mainshaft is in line with the engine crankshaft, and includes the 4th and 5th clutches, and gears for 5th, 4th, reverse, and idler. The mainshaft reverse gear is integral with the mainshaft 4th gear. The countershaft includes the gears for 1st, 2nd, 3rd, 4th, 5th, reverse, park, and the final drive. The final drive gear is integral with the countershaft. The countershaft 4th gear and the countershaft reverse gear can be locked to the countershaft providing the 4th or reverse gear, depending on which way the selector is moved. The secondary shaft includes the 1st, 2nd, and 3rd clutches, and gears for 1st, 2nd, 3rd, and idler. The idler shaft is located between the mainshaft and secondary shaft, and the idler gear transmits power between the mainshaft and the secondary shaft. The gears on the mainshaft and the secondary shaft are in constant mesh with those on the countershaft. When certain combinations of gears in the transmission are engaged by the clutches, power is transmitted through the mainshaft, then to the secondary shaft to the countershaft or through the mainshaft to the countershaft to provide drive.

Electronic Control
The electronic control system consists of the powertrain control module (PCM), sensors, and solenoid valves. Shifting and lock-up are electronically controlled for comfortable driving under all conditions. The PCM is located below the dashboard, under the glove box.

Hydraulic Control
The valve bodies include the main valve body, the regulator valve body, and the servo body. They are bolted to the torque converter housing. The main valve body contains the manual valve, the shift valves A, B, C, and E, the relief valve, the lock-up control valve, the cooler check valve, the servo control valve, and the ATF pump gears. The regulator valve body contains the regulator valve, the torque converter check valve, lock-up shift valve, and the 1st and 3rd accumulators. The servo body contains the servo valve, the shift valve D, accumulators for 2nd, 4th, and 5th, and shift solenoid valves for A, B, C, D, and E. Fluid from the regulator passes through the manual valve to the various control valves. The 1st, 3rd, 5th clutches receive fluid from their respective feed pipes, and the 2nd and the 4th clutches receive fluid from the internal hydraulic circuit.

Shift Control Mechanism
The PCM controls to shift gears the shift solenoid valves A, B, C, D, and E, and the A/T clutch pressure control solenoid valves A, B, and C, while receiving input signals from various sensors and switches located throughout the vehicle. The shift solenoid valves shift the positions of the shift valves to switch the port leading hydraulic pressure to the clutch. The A/T clutch pressure control solenoid valves A, B, and C regulate their respective pressure, and pressurize to the clutches to engage it and its corresponding gear. The pressures of the A/T clutch pressure control solenoid valves also apply to the shift valves to switch the port.

Lock-up Mechanism
The lock-up mechanism operates in D position (2nd, 3rd, 4th, and 5th), in D3 position (2nd and 3rd), and M (sequential sportshift mode) position (3rd, 4th, and 5th). The pressurized fluid is drained from the back of the torque converter through a fluid passage, causing the torque converter clutch piston to be held against the torque converter cover. As this takes place, the mainshaft rotates at the same speed as the engine crankshaft. Together with the hydraulic control, the PCM optimizes the timing and volume of the lock-up mechanism. When the shift solenoid valve E is turned on by the PCM, shift solenoid valve E pressure switches the lock-up shift valve lock-up on and off. The A/T clutch pressure control solenoid valve A and the lock-up control valve control the volume of the lock-up conditions.

Gear Selection
The shift lever has five positions: P: PARK, R: REVERSE, N: NEUTRAL, D: DRIVE 1st through 5th gear range with automatic shift and sequential sportshift in M (sequential sportshift mode) position, and D3: DRIVE 1st through 3rd gear range with automatic shift.

Position		Description
P: PARK		Front wheels locked; park pawl engaged with park gear on countershaft. All clutches are released.
R: REVERSE		Reverse; reverse selector engaged with countershaft reverse gear and 4th clutch engaged.
N: NEUTRAL		All clutches are released.
D: DRIVE (1st through 5th)	Automatic shift	General driving; starts off in 1st, shifts automatically to 2nd, 3rd, 4th, then 5th, depending on vehicle speed and throttle position. Downshifts through 4th, 3rd, 2nd, and 1st on deceleration to stop. The lock-up mechanism operates in 2nd, 3rd, 4th, and 5th gears.
	M position Sequential sportshift mode	Manual gear shift driving; vehicle starts off in 1st gear and will shift into 2nd gear automatically, but does not up shift after 2nd gear. The lock-up mechanism operates in 3rd, 4th, and 5th gears.
D3: DRIVE (1st through 3rd)		For rapid acceleration at highway speeds and general driving, up-hill and down-hill driving; starts off in 1st, shifts automatically to 2nd, then 3rd, depending on vehicle speed and throttle position. Downshifts through 2nd to 1st on deceleration to stop. The lock-up mechanism operates in 2nd and 3rd gears.

Starting is possible only in the P and N positions because of a slide-type neutral-safety switch.

Automatic Transmission (A/T) Gear Position Indicator
The A/T gear position indicator in the instrument panel shows which shift lever position has been selected without having to look down at the shift lever. With the shift lever in the M (sequential sportshift mode) position, the shift indicator between the speedometer and tachometer in the instrument panel will display the gear selected.

System Description (cont'd)

Clutches and Gears

The 5-speed automatic transmission uses hydraulically-actuated clutches to engage or disengage the transmission gears. When hydraulic pressure is introduced into the clutch drum, the clutch piston moves. This presses the friction discs and steel plates together, locking them so they don't slip. Power is then transmitted through the engaged clutch pack to its hub-mounted gear. Likewise, when the hydraulic pressure is bled from the clutch pack, the piston releases the friction discs and steel plates, and they are free to slide past each other. This allows the gear to spin independently on its shaft, transmitting no power.

1st Clutch
The 1st clutch engages/disengages 1st gear, and is located at the middle of the secondary shaft. The 1st clutch is joined back-to-back to the 3rd clutch. The 1st clutch is supplied hydraulic pressure by its ATF feed pipe within the secondary shaft.

2nd Clutch
The 2nd clutch engages/disengages 2nd gear, and is located at the end of the secondary shaft, opposite the end cover. The 2nd clutch is supplied hydraulic pressure by a circuit connected to the internal hydraulic circuit.

3rd Clutch
The 3rd clutch engages/disengages 3rd gear, and is located at the middle of the secondary shaft. The 3rd clutch is joined back-to-back to the 1st clutch. The 3rd clutch is supplied hydraulic pressure by its ATF feed pipe within the secondary shaft.

4th Clutch
The 4th clutch engages/disengages 4th gear, as well as reverse gear, and is located at the middle of the mainshaft. The 4th clutch is joined back-to-back to the 5th clutch. The 4th clutch is supplied hydraulic pressure by its ATF feed pipe with in the mainshaft.

5th Clutch
The 5th clutch engages/disengages 5th gear, and is located at the middle of the mainshaft. The 5th clutch is joined back-to-back to the 4th clutch. The 5th clutch is supplied hydraulic pressure by its ATF feed pipe within the mainshaft.

Gear operation
Gears on the mainshaft:
- 4th gear engages/disengages with the mainshaft by the 4th clutch.
- 5th gear engages/disengages with the mainshaft by the 5th clutch.
- Reverse gear engages/disengages with the mainshaft by the 4th clutch.
- Idler gear is splined with the mainshaft, and rotates with the mainshaft.

Gears on the countershaft:
- Final drive gear is integral with the countershaft.
- 1st, 2nd, 3rd, 5th, and park gears are splined with the countershaft, and rotate with the countershaft.
- 4th gear and reverse gear rotate freely from the countershaft. The reverse selector engages 4th gear and reverse gear with the reverse selector hub. The reverse selector hub is splined to the countershaft so that the 4th gear and reverse gear engage with the countershaft.

Gears on the secondary shaft:
- 1st gear engages/disengages with the secondary shaft by the 1st clutch.
- 2nd gear engages/disengages with the secondary shaft by the 2nd clutch.
- 3rd gear engages/disengages with the secondary shaft by the 3rd clutch.
- Idler gear is splined with the secondary shaft, and rotates with the secondary shaft.

The idler gear on the idler shaft transmits power between the mainshaft and the secondary shaft.
The reverse idler gear transmits power from the mainshaft reverse gear to the countershaft reverse gear, and changes rotational direction of the countershaft to reverse.

Transmission Cutaway View

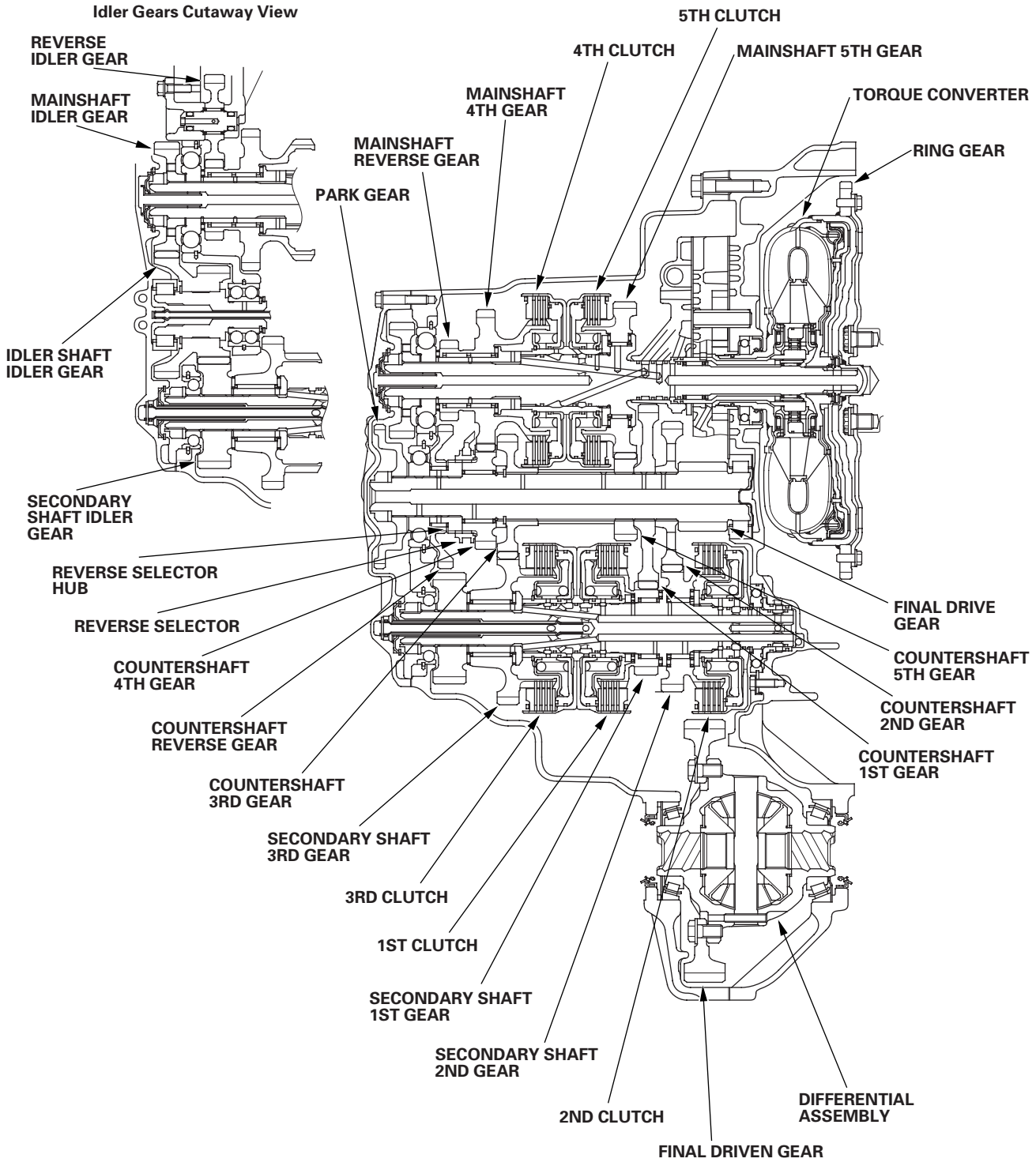

System Description (cont'd)

Power Flow

P Position
Hydraulic pressure is not applied to the clutches. Power is not transmitted to the countershaft. The countershaft is locked by the park pawl, interlocking the park gear.

N Position
Engine power transmitted from the torque converter drives the mainshaft idler gear, the idler shaft idler gear, and the secondary shaft idler gear, but hydraulic pressure is not applied to the clutches. Power is not transmitted to the countershaft.
In this position, the position of the reverse selector differs according to whether the shift lever shifted from the D or R position:

- When shifted from the D position, the reverse selector engages with the countershaft 4th gear and the reverse selector hub, and the 4th gear engages with the countershaft.
- When shifted from the R position, the reverse selector engages with the countershaft reverse gear and the reverse selector hub, and the reverse gear engages with the countershaft.

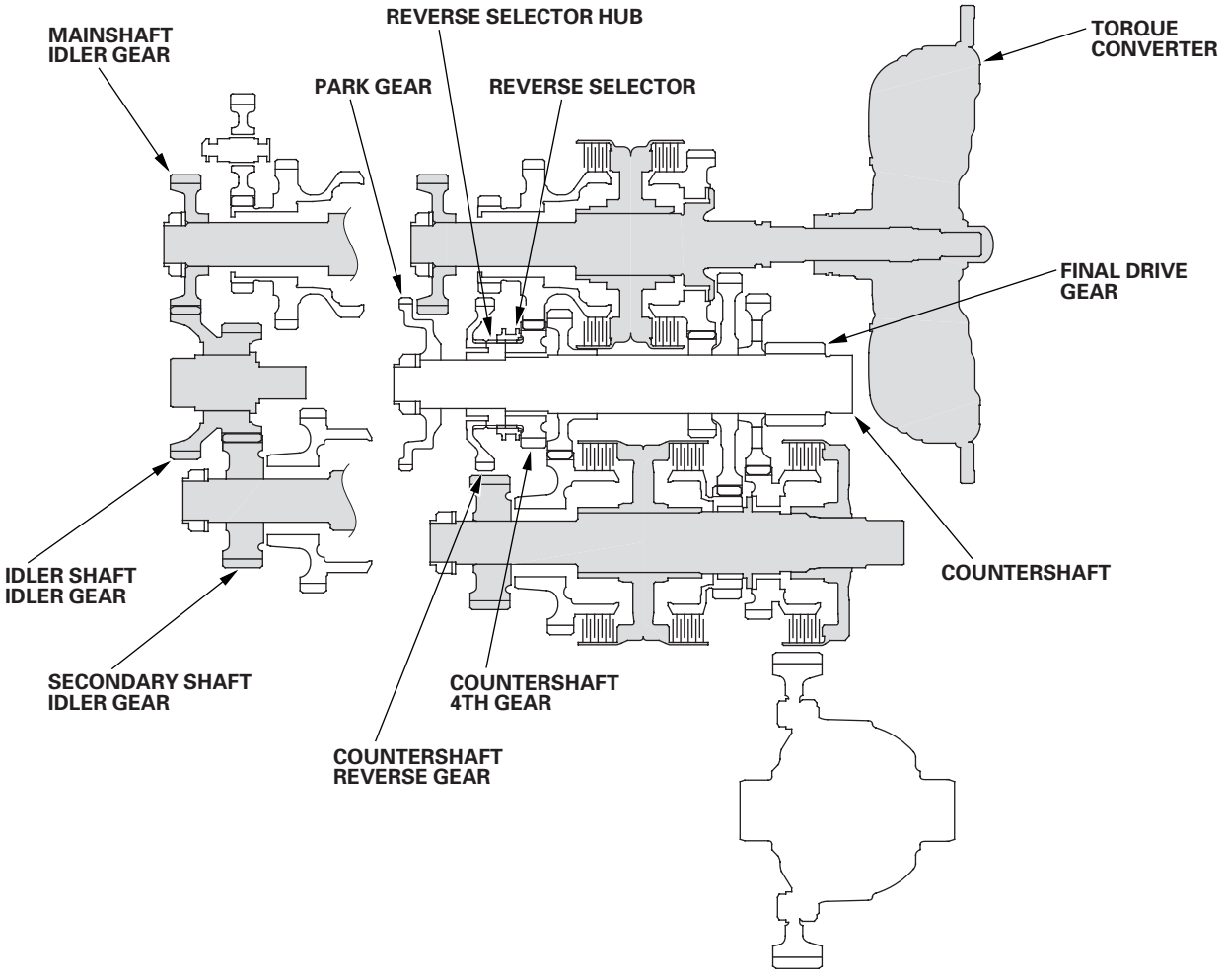

1st Gear

- Hydraulic pressure is applied to the 1st clutch, then the 1st clutch engages the secondary shaft 1st gear with the secondary shaft.
- The mainshaft idler gear drives the secondary shaft via the idler shaft idler gear and the secondary shaft idler gear.
- The secondary shaft 1st gear drives the countershaft 1st gear and the countershaft.
- Power is transmitted to the final drive gear, which in turn drives the final driven gear.

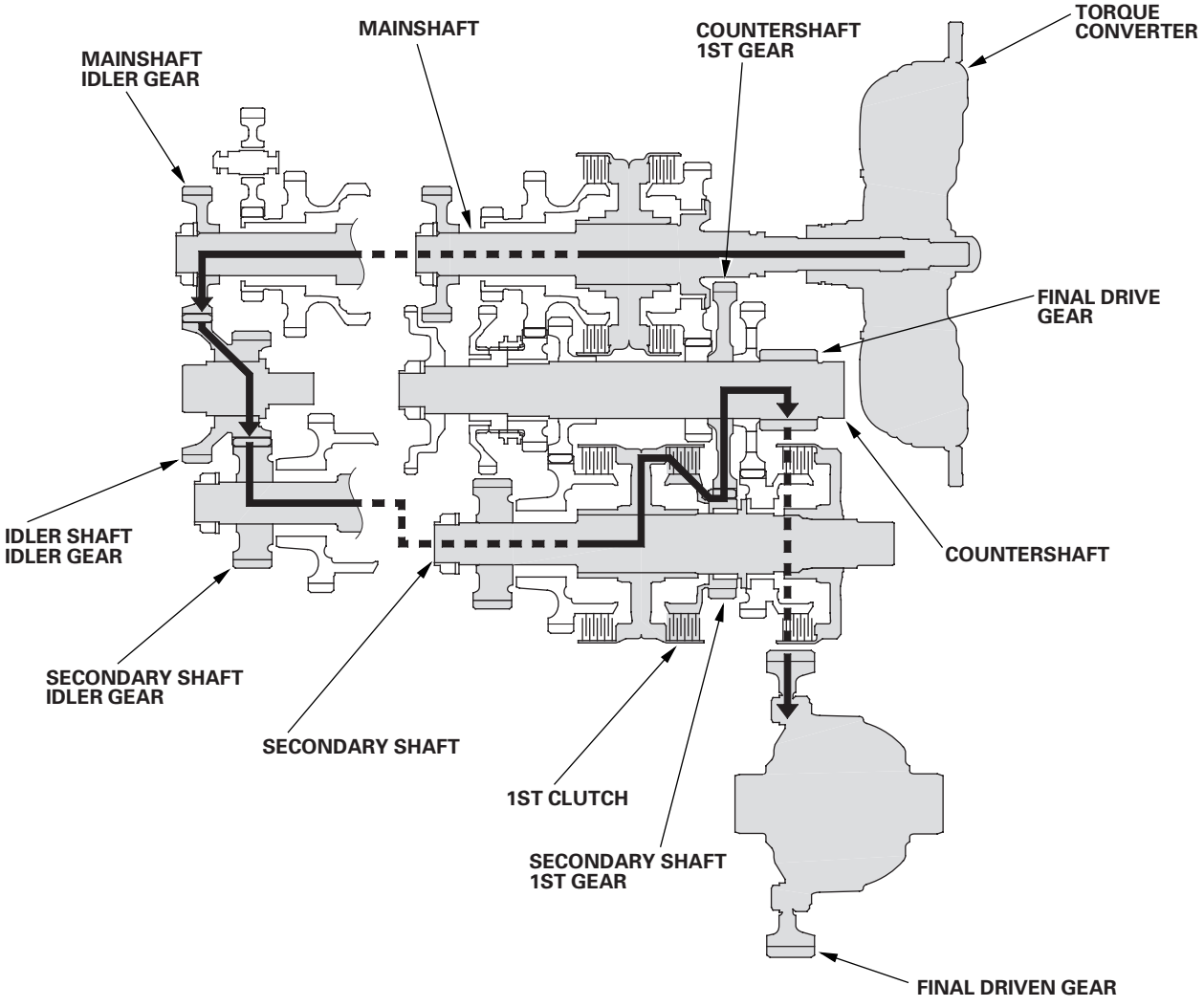

(cont'd)

System Description (cont'd)

Power Flow (cont'd)

2nd Gear

- Hydraulic pressure is applied to the 2nd clutch, then the 2nd clutch engages the secondary shaft 2nd gear with the secondary shaft.
- The mainshaft idler gear drives the secondary shaft via the idler shaft idler gear and the secondary shaft idler gear.
- The secondary shaft 2nd gear drives the countershaft 2nd gear and the countershaft.
- Power is transmitted to the final drive gear, which in turn drives the final driven gear.

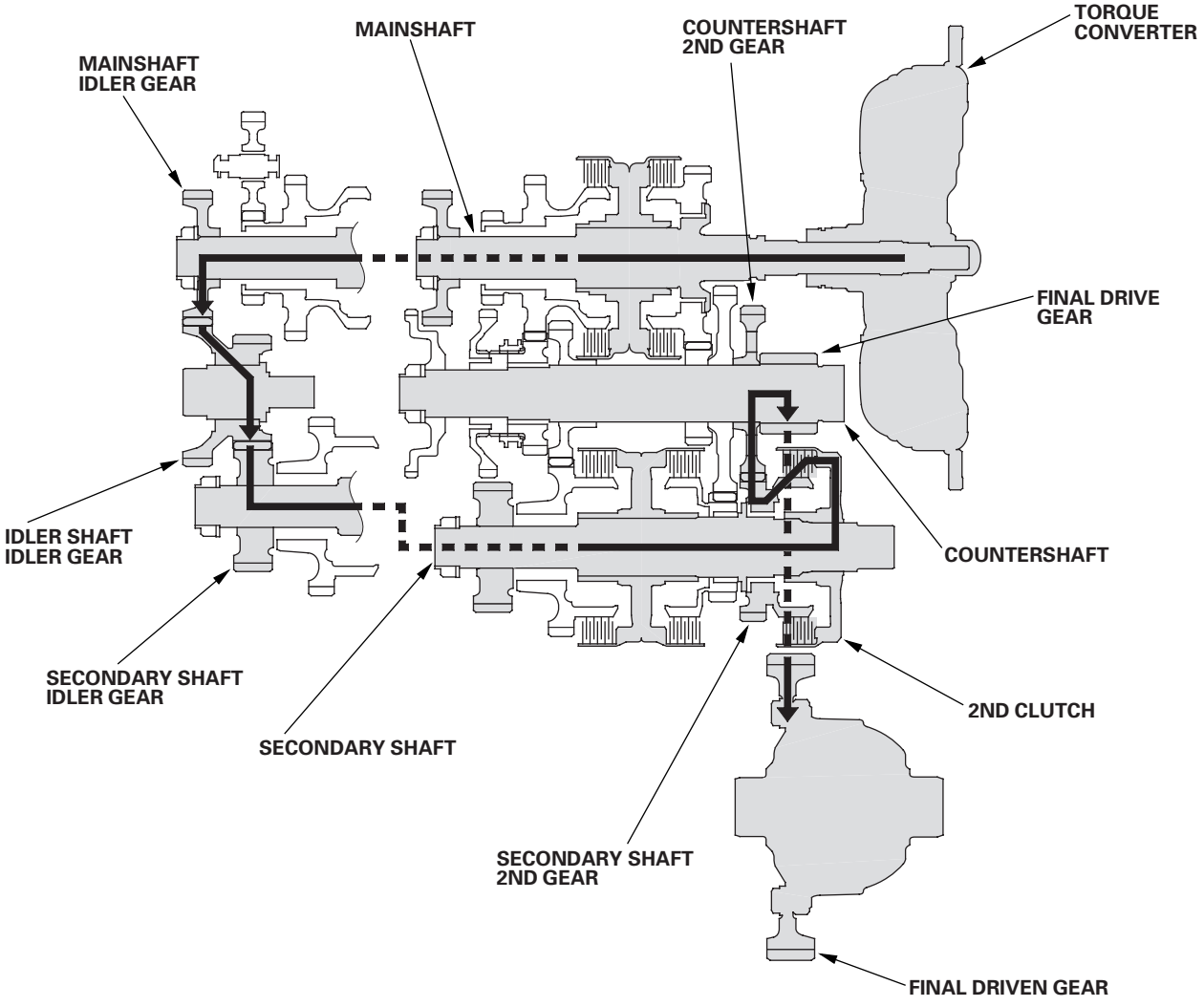

3rd Gear

- Hydraulic pressure is applied to the 3rd clutch, then the 3rd clutch engages the secondary shaft 3rd gear with the secondary shaft.
- The mainshaft idler gear drives the secondary shaft via the idler shaft idler gear and secondary shaft idler gear.
- The secondary shaft 3rd gear drives the countershaft 3rd gear and the countershaft.
- Power is transmitted to the final drive gear, which in turn drives the final driven gear.

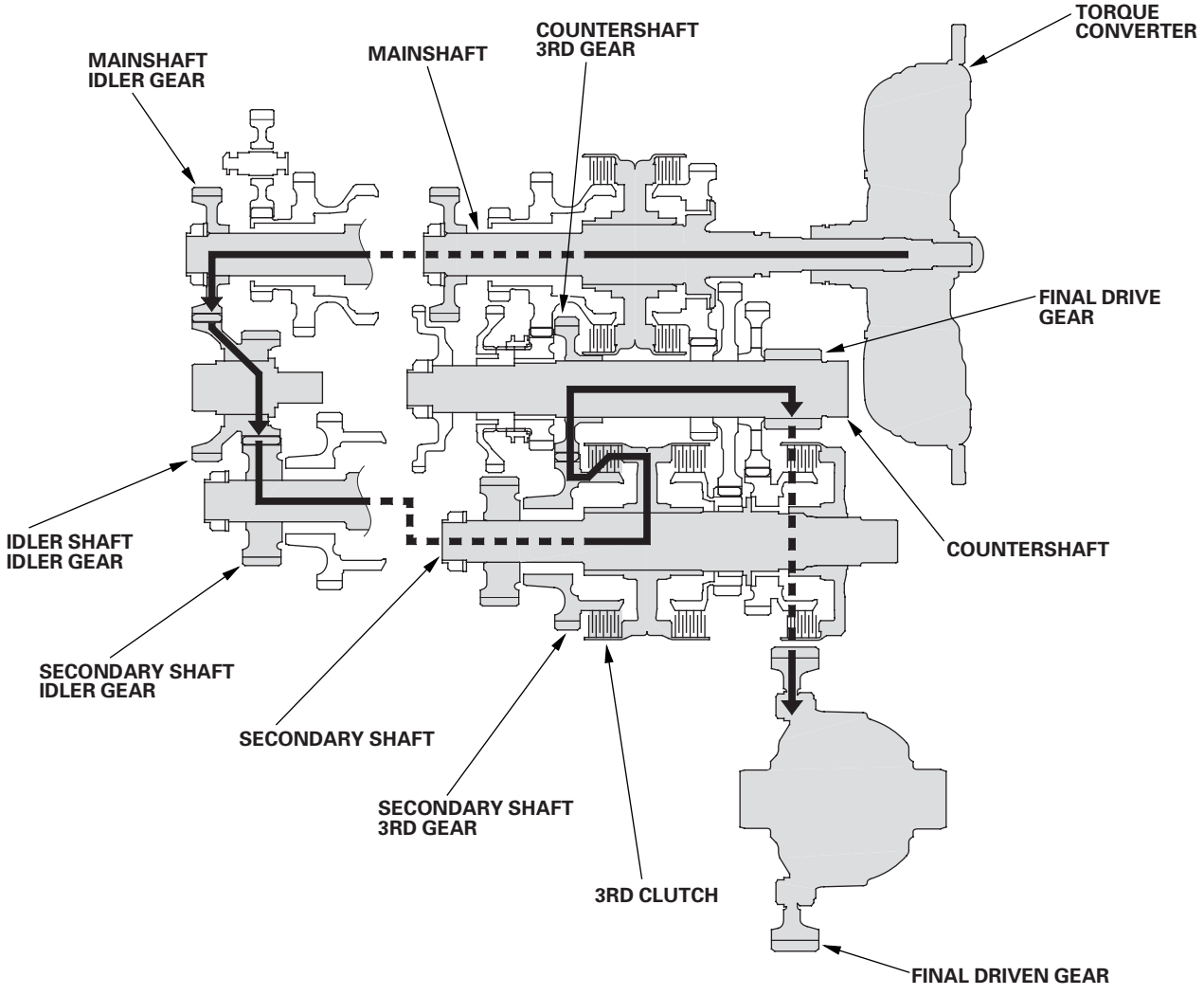

(cont'd)

System Description (cont'd)

Power Flow (cont'd)

4th Gear

- Hydraulic pressure is applied to the servo valve to engage the reverse selector with the countershaft 4th gear and reverse selector hub while the shift lever is in forward range (D, D3, and M positions).
- Hydraulic pressure is also applied to the 4th clutch, then the 4th clutch engages the mainshaft 4th gear with the mainshaft.
- The mainshaft 4th gear drives the countershaft 4th gear and the countershaft.
- Power is transmitted to the final drive gear, which in turn drives the final driven gear.

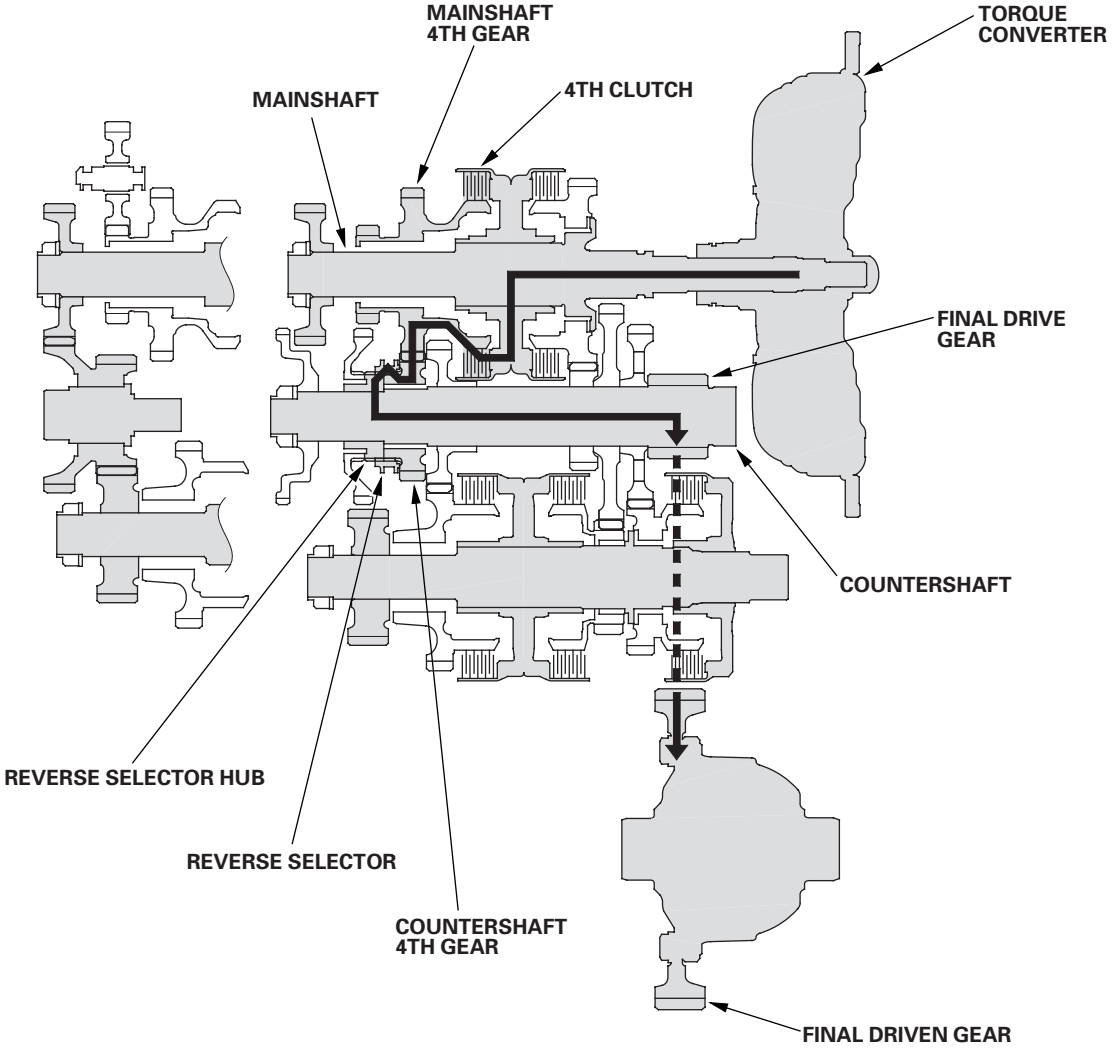

5th Gear

- Hydraulic pressure is applied to the 5th clutch, then the 5th clutch engages the mainshaft 5th gear with the mainshaft.
- The mainshaft 5th gear drives the countershaft 5th gear and the countershaft.
- Power is transmitted to the final drive gear, which in turn drives the final driven gear.

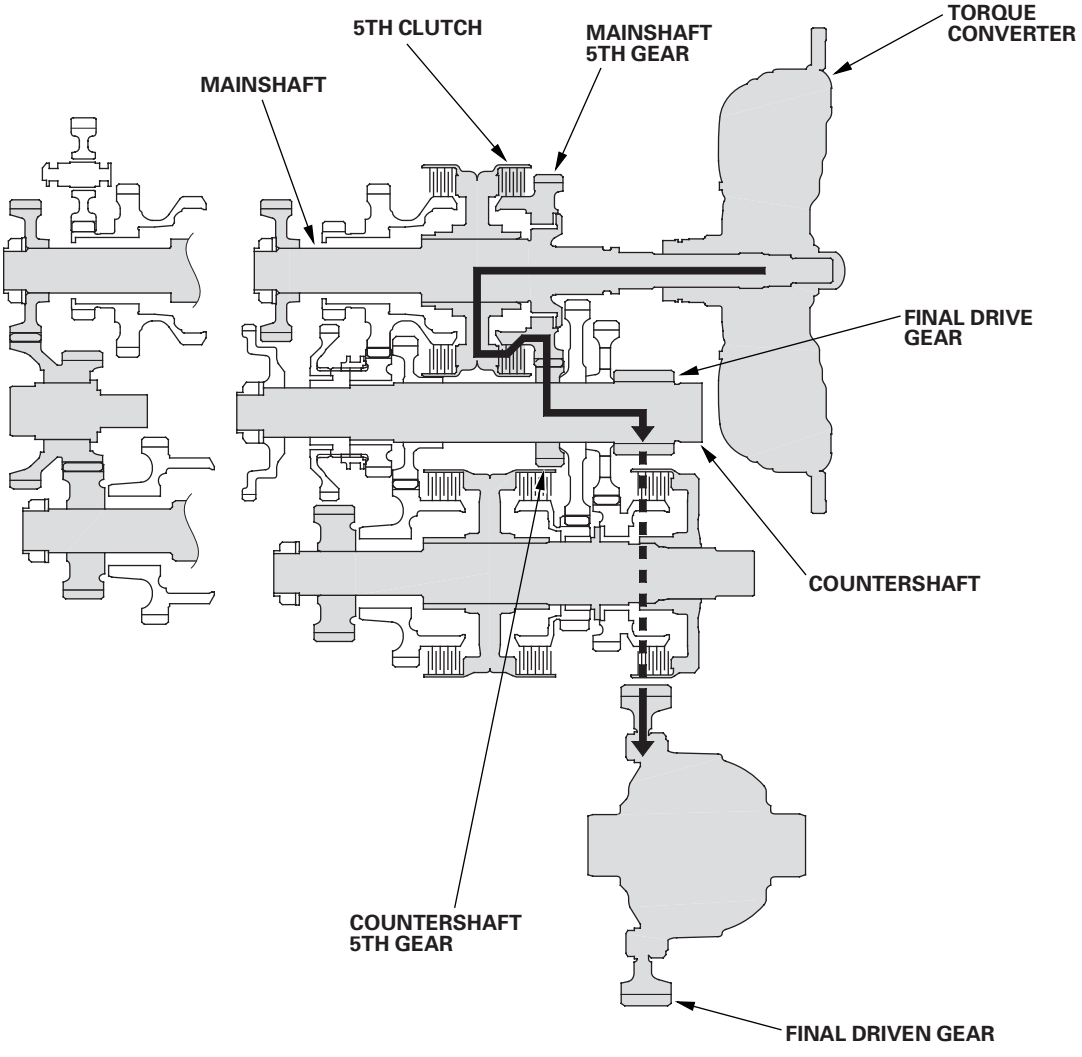

(cont'd)

System Description (cont'd)

Power Flow (cont'd)

R Position

- Hydraulic pressure is applied to the servo valve to engage the reverse selector with the countershaft reverse gear and reverse selector hub while the shift lever is in the R position.
- Hydraulic pressure is also applied to the 4th clutch, then the 4th clutch engages the mainshaft reverse gear with the mainshaft.
- The mainshaft reverse gear drives the countershaft reverse gear via the reverse idler gear.
- The rotational direction of the countershaft reverse gear is changed by the reverse idler gear.
- The countershaft reverse gear drives the countershaft via the reverse selector, which drives the reverse selector hub.
- Power is transmitted to the final drive gear, which in turn drives the final driven gear.

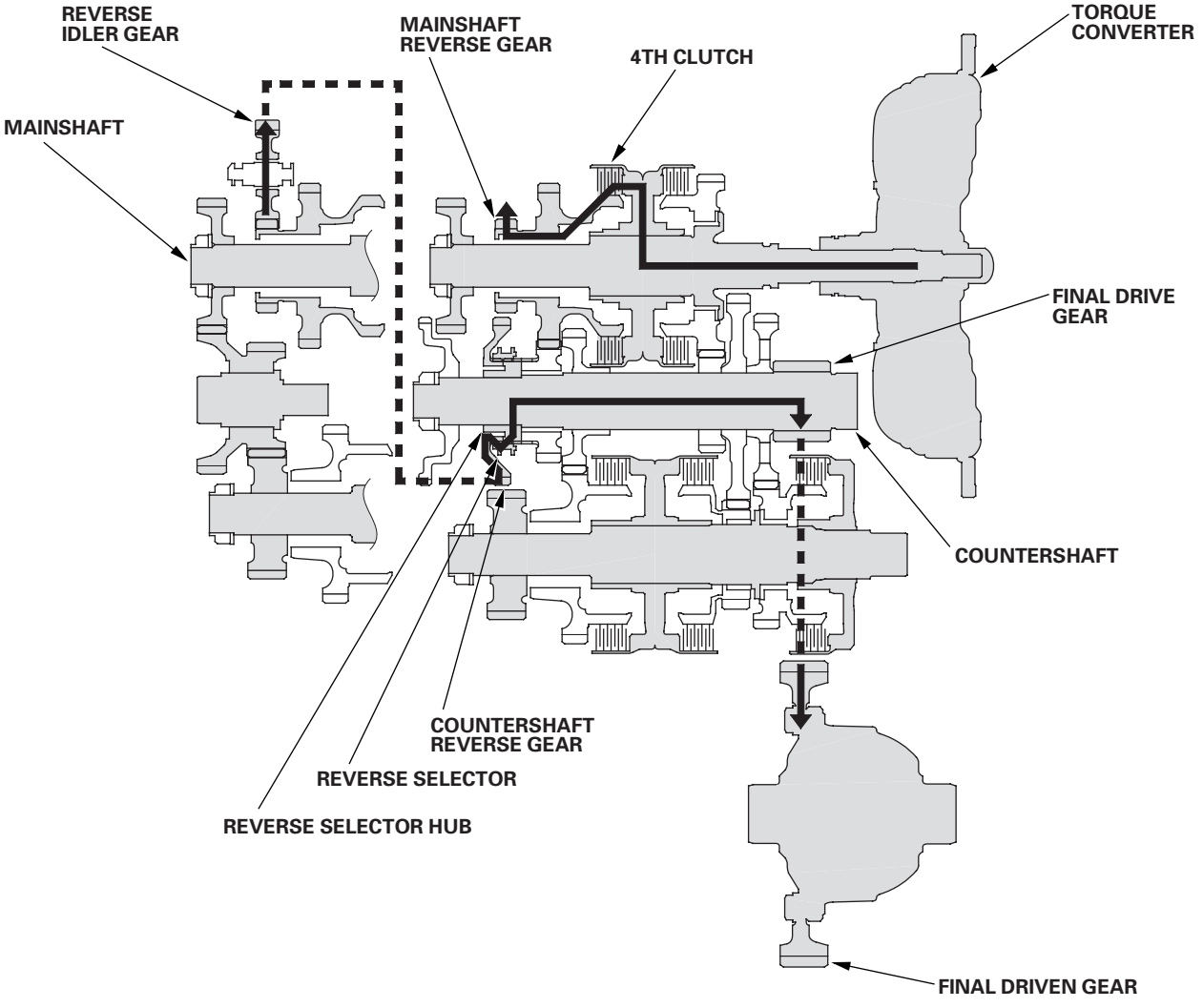

Electronic Control System

Functional Diagram

The electronic control system consists of the powertrain control module (PCM), sensors, and solenoid valves. Shifting and lock-up are electronically controlled for comfortable driving under all conditions.

The PCM receives input signals from the sensors, switches, and other control units, processes data, and outputs signals for the engine control system and A/T control system. The A/T control system includes shift control, grade logic control, clutch pressure control, and lock-up control.
The PCM switches the shift solenoid valves and the A/T clutch pressure control solenoid valves to control shifting transmission gears and lock-up torque converter clutch.

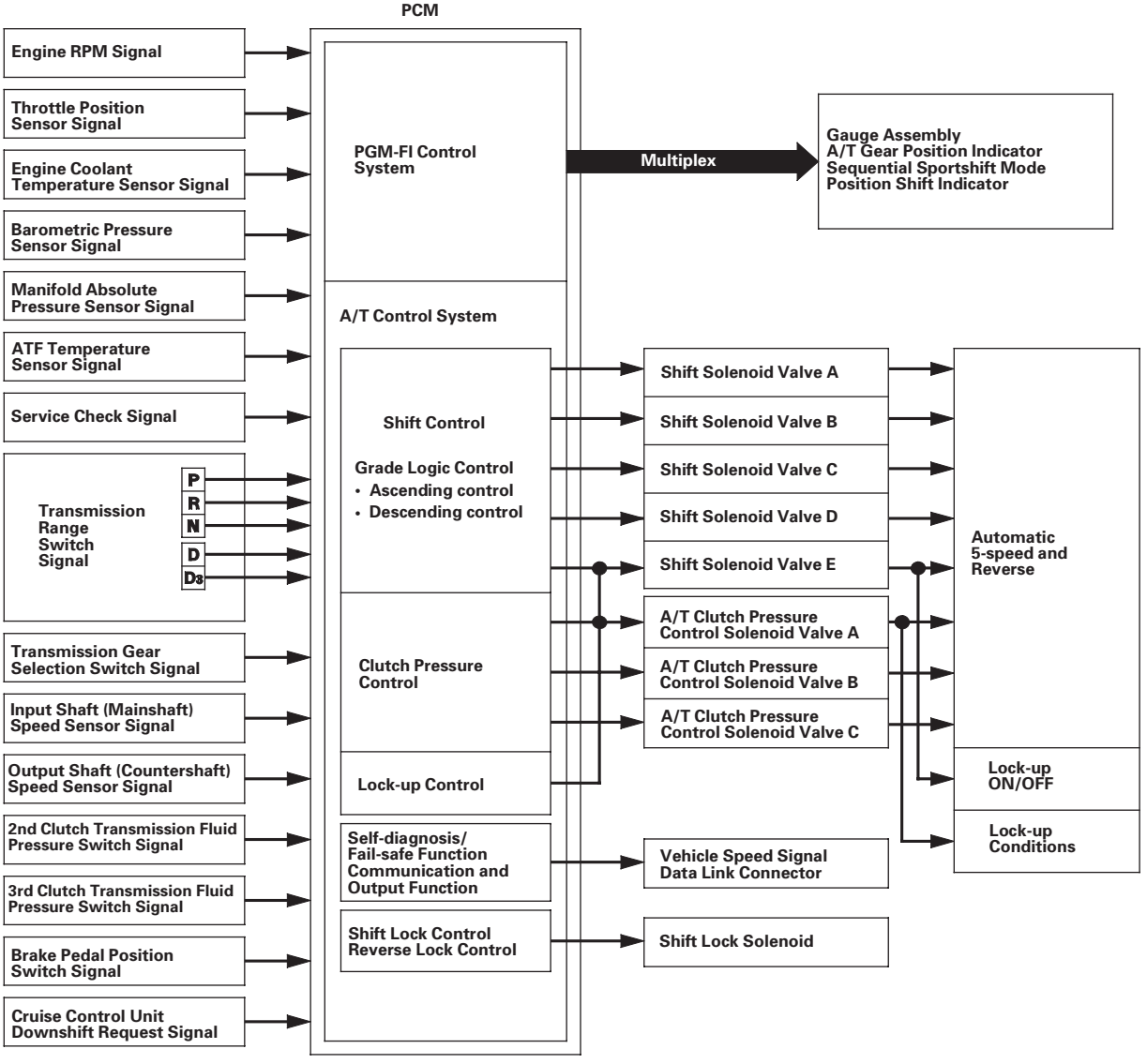

(cont'd)

System Description (cont'd)

Electronic Control System (cont'd)

Electronic Controls Location

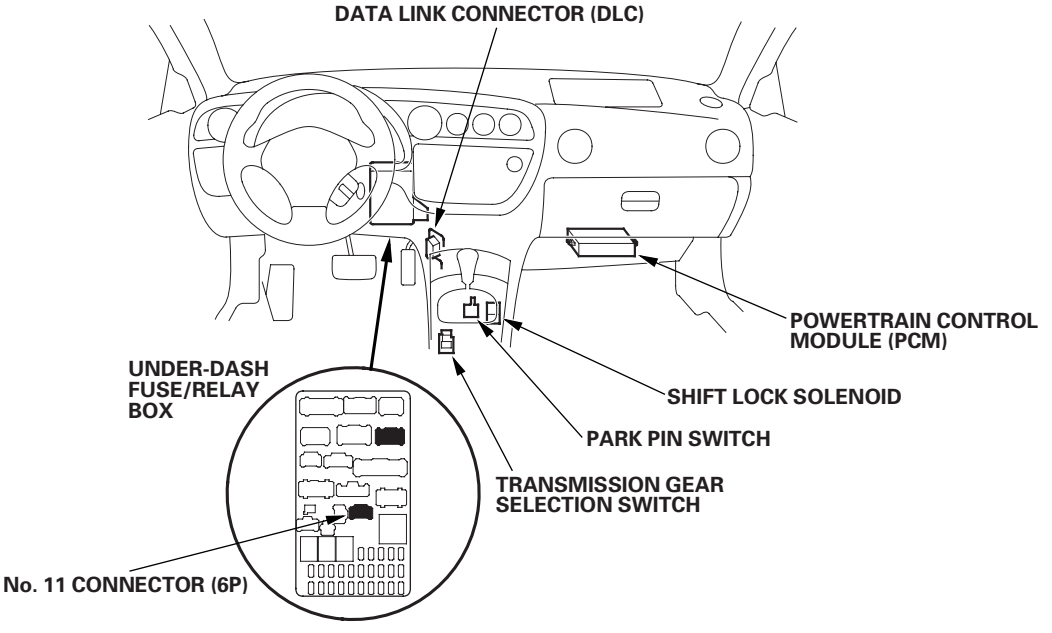

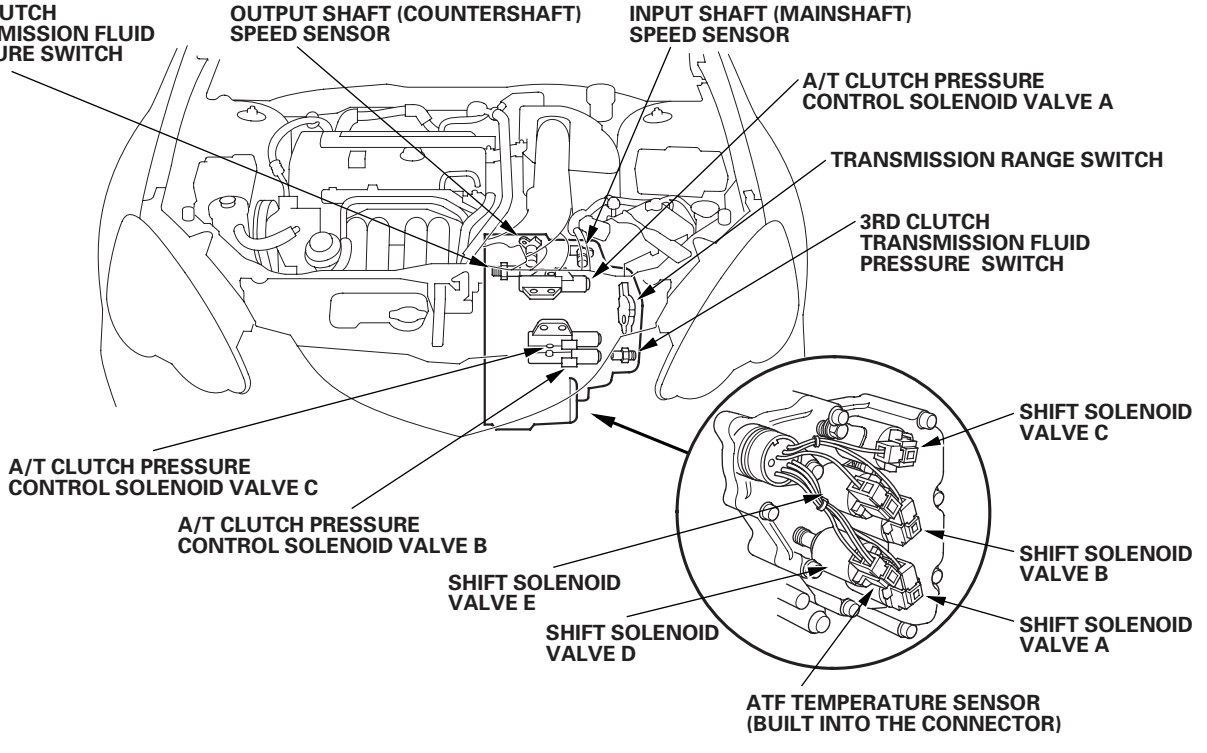

Shift Control
The PCM instantly determines which gear should be selected by various signals sent from sensors and switches, and it actuates the shift solenoid valves A, B, C, D, and E to control shifting.

Also, a grade logic control system has been adopted to control shifting in D and D3 positions. The PCM compares actual driving conditions with memorized driving conditions, based on the input from the throttle position sensor, the engine coolant temperature sensor, the barometric pressure sensor, the brake pedal position switch signal, and the shift lever position signal, to control shifting while the vehicle is ascending or descending a slope.

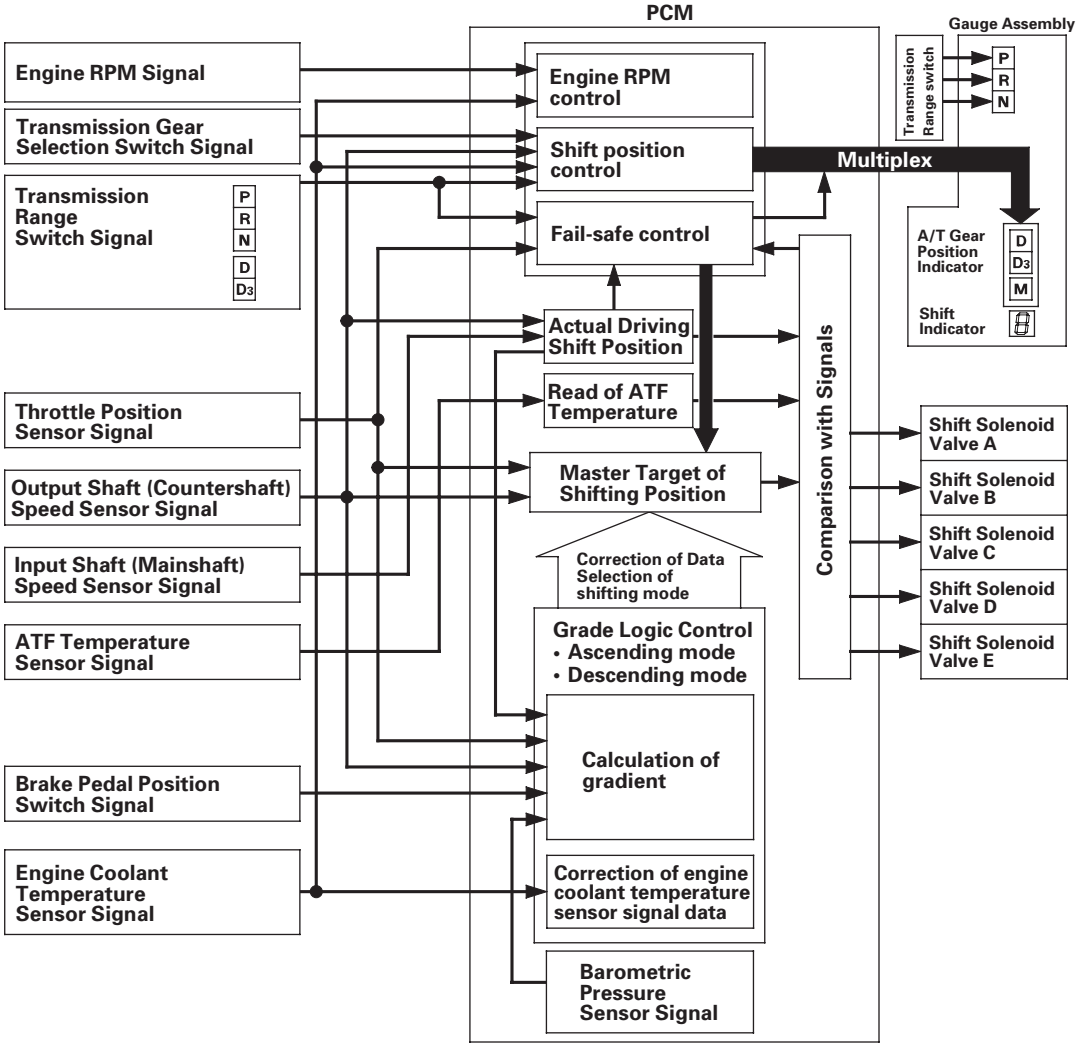

(cont'd)

System Description (cont'd)

Electronic Control System (cont'd)

The PCM turns the shift solenoid valves A, B, C, D, and E ON and OFF to control shifting transmission gear. The combination of driving signals to shift solenoid valves A, B, C, D, and E are shown in table.

Position	Gear position	Shift solenoid valves				
		A	B	C	D	E
D, D3, M	Shifting from N position	OFF	ON	ON	OFF	OFF
	Stays in 1st	ON	ON	ON	OFF	OFF
	Shifting gears between 1st and 2nd	OFF	ON	ON	OFF	OFF
	Stays in 2nd	OFF	ON	OFF	ON	OFF or ON
	Shifting gears between 2nd and 3rd	OFF	ON	ON	ON	OFF or ON
	Stays in 3rd	OFF	OFF	ON	OFF	OFF or ON
D, M	Shifting gears between 3rd and 4th	OFF	OFF	OFF	OFF	OFF or ON
	Stays in 4th	ON	OFF	OFF	OFF	OFF or ON
	Shifting gears between 4th and 5th	ON	OFF	OFF	ON	OFF or ON
	Stays in 5th	ON	OFF	ON	ON	OFF or ON
R	Shifting from P and N position	OFF	ON	OFF	OFF	ON
	Stays in reverse	ON	ON	OFF	OFF	ON
	Reverse inhibit	ON	ON	OFF	OFF	OFF
P	Park	OFF	ON	OFF	OFF	ON
N	Neutral	OFF	ON	ON	OFF	OFF

Grade Logic Control: Ascending Control
When the PCM determines that the vehicle is climbing a hill in D and D3 positions, the system extends the engagement area of 2nd, 3rd, and 4th gears to prevent the transmission from frequently shifting between 2nd and 3rd gears, between 3rd and 4th gears, and between 4th and 5th gears, so the vehicle can run smooth and have more power when needed.
Shift schedules stored in the PCM between 2nd and 3rd gears, between 3rd and 4th gears, and between 4th and 5th gears, enable it to automatically select the most suitable gear according to the magnitude of a gradient.

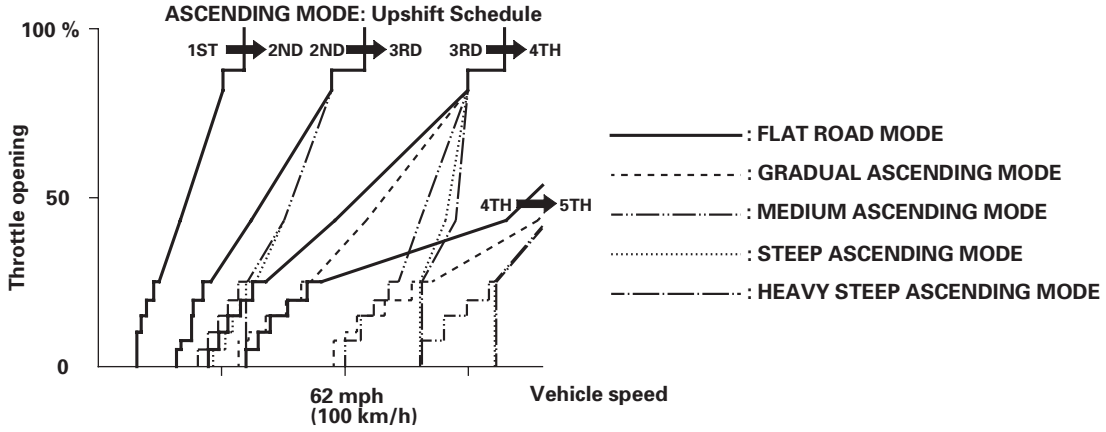

Grade Logic Control: Descending Control
When the PCM determines that the vehicle is going down a hill in D and D3 positions, the shift-up speed from 4th to 5th gear, from 3rd to 4th gear, and from 2nd to 3rd gear (when the throttle is closed) becomes faster than the set speed for flat road driving to widen the 4th gear, 3rd gear, and 2nd gear driving area. This, in combination with engine braking from the deceleration lock-up, achieves smooth driving when the vehicle is descending. There are three descending modes with different 4th gear driving areas, 3rd gear driving areas, and 2nd gear driving areas according to the magnitude of a gradient stored in the PCM. When the vehicle is in 5th gear or 4th gear, and you are decelerating when you are applying the brakes on a steep hill, the transmission will downshift to lower gear. When you accelerate, the transmission will then return to a higher gear.

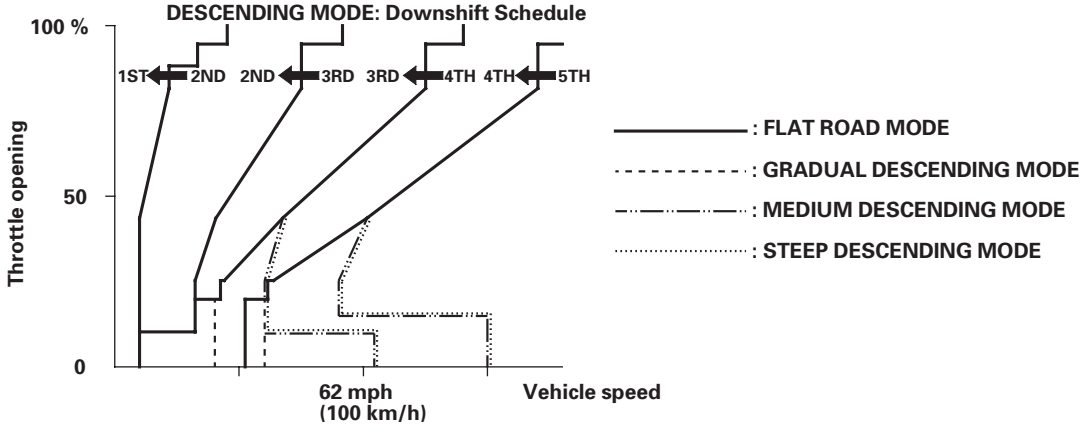

(cont'd)

System Description (cont'd)

Electronic Control System (cont'd)

Deceleration Control
When the vehicle goes around a corner and needs to decelerate first and then accelerate, the PCM sets the data for deceleration control to reduce the number of times the transmission shifts. When the vehicle is decelerating from speeds above 27mph (43 km/h), the PCM shifts the transmission from 5th or 4th to 2nd earlier than normal to cope with upcoming acceleration.

Shift Hold Control
When the vehicle is driven aggressively on a winding road, the PCM will extend the engagement time of 3rd gear and 4th gear to prevent the transmission from frequently shifting between 3rd, 4th, and 5th gears. This allows the driver to have more control for both acceleration and deceleration.
The PCM monitors the average change in vehicle speed and throttle over time. When these values exceed those for normal driving conditions, the shift-up from 3rd to 4th gear and 4th to 5th gear is delayed. This gives more control over power, and engine braking when the driver is driving aggressively around on a winding road. The transmission will resume the normal shift-up pattern after the PCM determines that normal driving has resumed.

Clutch Pressure Control

The PCM actuates the A/T clutch pressure control solenoid valves A, B, and C to control the clutch pressure. When shifting between lower and higher gears, the clutch pressure regulated by the A/T clutch pressure control solenoid valves A, B, and C engages and disengages the clutch smoothly.

The PCM receives input signals from the various sensors and switches, processes data, and outputs a current to the A/T clutch pressure control solenoid valves A, B, and C.

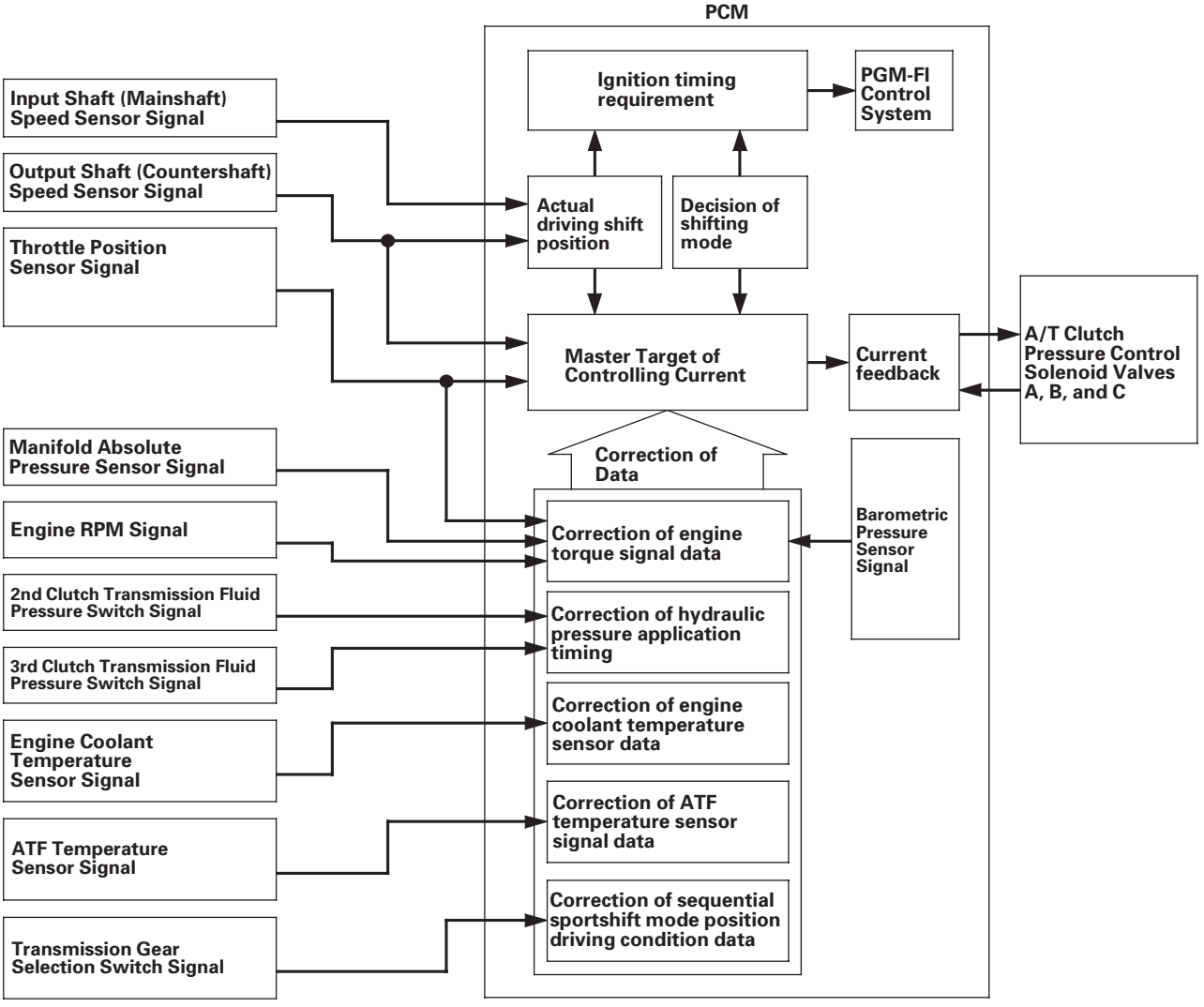

(cont'd)

System Description (cont'd)

Electronic Control System (cont'd)

Lock-up Control

The shift solenoid valve E controls the hydraulic pressure to switch the lock-up shift valve and lock-up ON and OFF. The PCM actuates the shift solenoid valve E and the A/T clutch pressure control solenoid valve A to control the torque converter clutch lock-up. When the shift solenoid valve E is turned ON, the condition of the lock-up starts.
The A/T clutch pressure control solenoid valve A regulates and applies the hydraulic pressure to the lock-up control valve to control the amount of the lock-up.
The lock-up mechanism operates in 2nd, 3rd, 4th, and 5th gears in D position, 2nd and 3rd gears in D3 position, and 3rd, 4th, and 5th gears in M position.

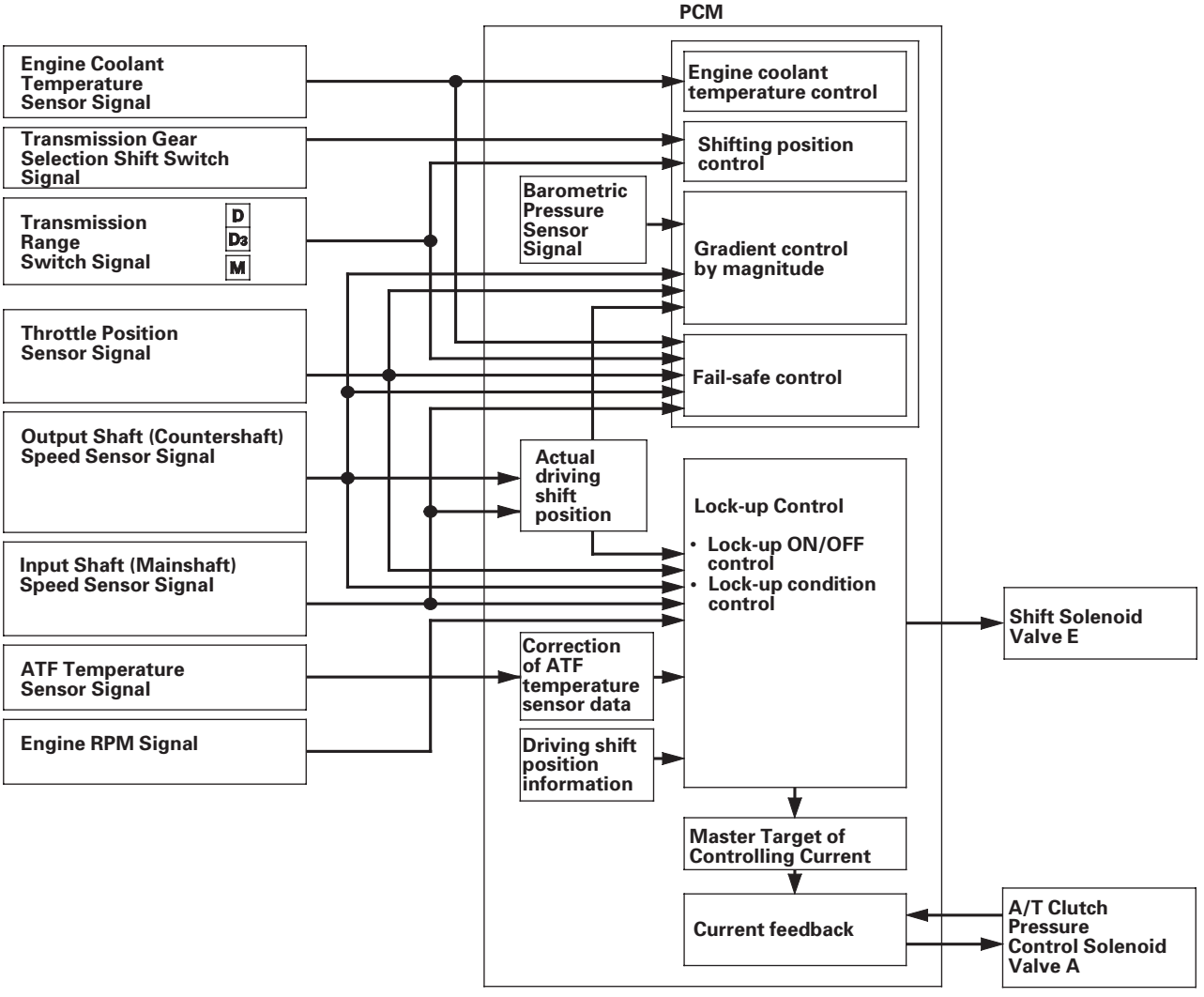

PCM Electrical Connections - 2002-2004 Models

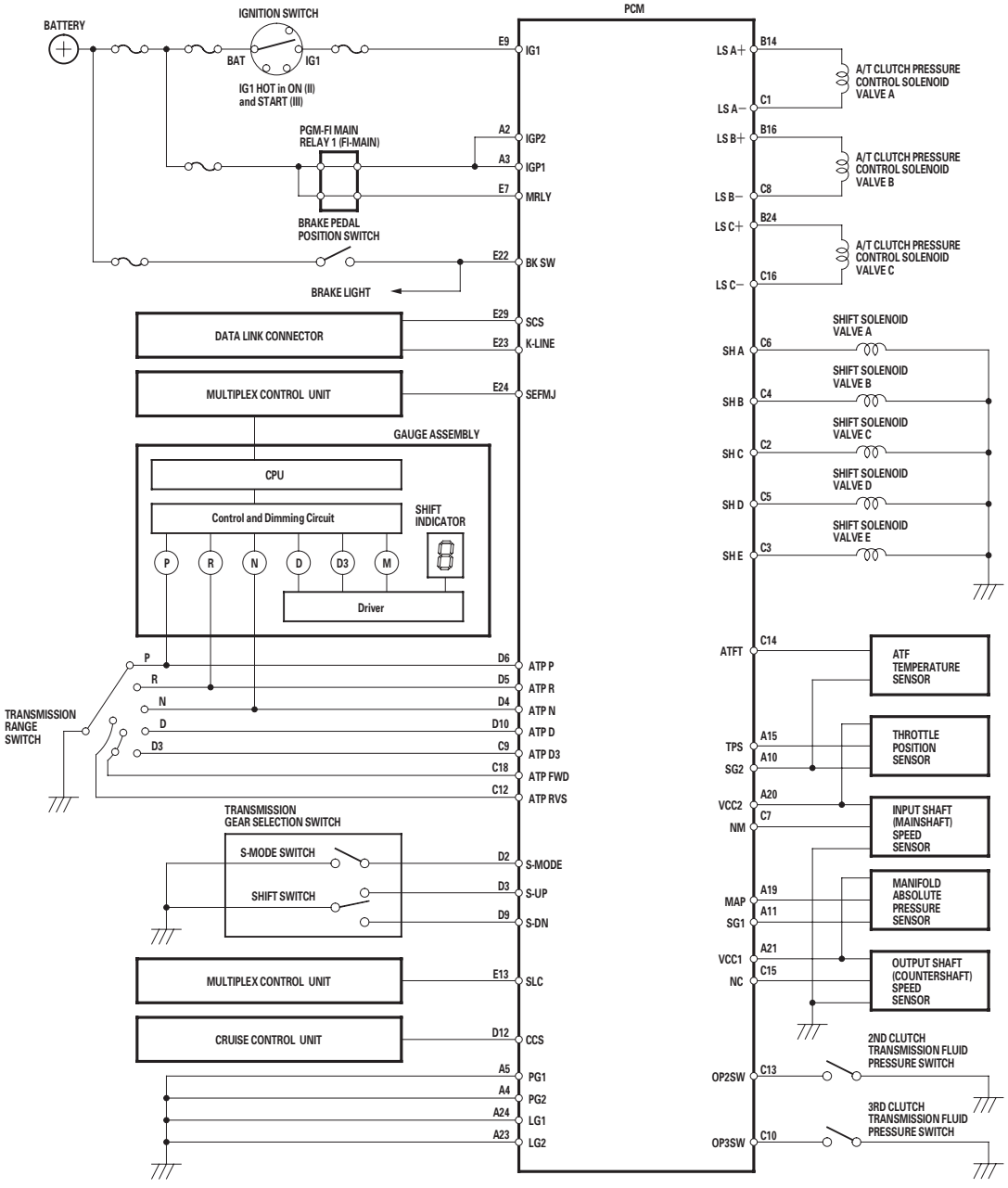

(cont'd)

System Description (cont'd)

Electronic Control System (cont'd)

PCM Electrical Connections - 2005-2006 Models

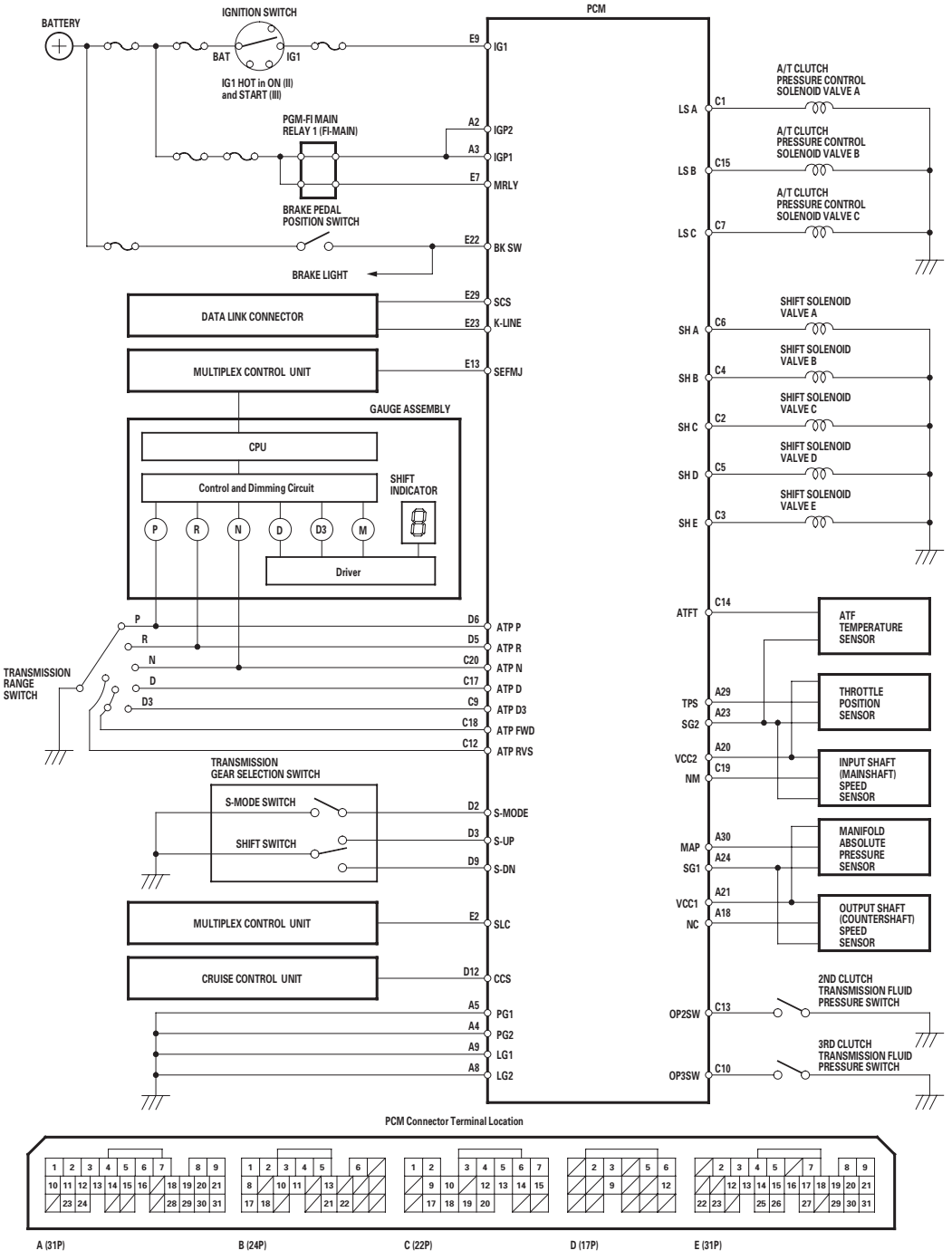

2002-2004 Models

PCM Inputs and Outputs

The PCM terminal voltage and measuring conditions are shown for the connector terminals that are related to the A/T control system.

PCM Connector Terminal Locations

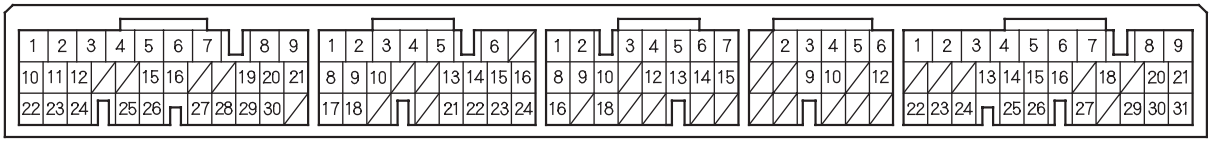

PCM CONNECTOR A (31P)

Terminal Number	Wire Color	Signal	Description	Measuring Conditions/Terminal Voltage
A2	YEL/BLK	IGP2	Power supply circuit from main relay	With ignition switch ON (II): Battery voltage With ignition switch OFF: 0 V
A3	YEL/BLK	IGP1	Power supply circuit from main relay	With ignition switch ON (II): Battery voltage With ignition switch OFF: 0 V
A4	BLK	PG2	Ground	Less than 1.0 V at all times
A5	BLK	PG1	Ground	Less than 1.0 V at all times
A10	GRN/YEL	SG2	Sensor ground	Less than 1.0 V at all times
A11	GRN/WHT	SG1	Sensor ground	Less than 1.0 V at all times
A20	YEL/BLU	VCC2	Power supply circuit for sensors	With ignition switch ON (II): About 5 V With ignition switch OFF: 0 V
A21	YEL/RED	VCC1	Power supply circuit for sensors	With ignition switch ON (II): About 5 V With ignition switch OFF: 0 V
A23	BRN/YEL	LG2	Ground	Less than 1.0 V at all times
A24	BRN/YEL	LG1	Ground	Less than 1.0 V at all times

PCM CONNECTOR B (24P)

Terminal Number	Wire Color	Signal	Description	Measuring Condition/Terminal Voltage
B14	RED/BLK	LS A+	A/T clutch pressure control solenoid valve A power supply positive electrode	With ignition switch ON (II): Pulsing signal
B16	BRN/WHT	LS B+	A/T clutch pressure control solenoid valve B power supply positive electrode	With ignition switch ON (II): Pulsing signal
B24	BLU/YEL	LS C+	A/T clutch pressure control solenoid valve C power supply positive electrode	With ignition switch ON (II): Pulsing signal

(cont'd)

System Description (cont'd)

Electronic Control System (cont'd)

PCM Inputs and Outputs (cont'd)

PCM Connector Terminal Locations

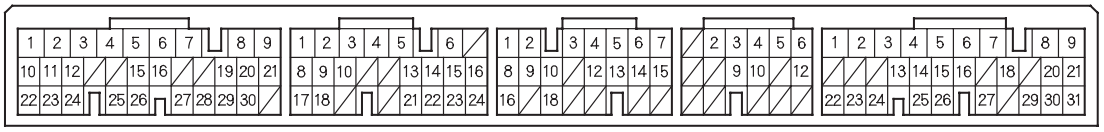

PCM CONNECTOR C (22P)

Terminal Number	Wire Color	Signal	Description	Measuring Condition/Terminal Voltage
C1	WHT/BLK	LS A—	A/T clutch pressure control solenoid valve A power supply negative electrode	With ignition switch ON (II): 0 V
C2	GRN	SH C	Shift solenoid valve C control	Battery voltage in these positions: • N • 1st, 3rd, and 5th gears in D, D3, and M 0 V in these positions: • P and R • 2nd and 4th gears in D, D3, and M
C3	YEL	SH E	Shift solenoid valve E control	Battery voltage in these positions: • P and R 0 V in these positions: • N • 1st gears in D, D3, and M
C4	GRN/WHT	SH B	Shift solenoid valve B control	Battery voltage in these positions: • P, R, and N • 1st and 2nd gears in D, D3, and M 0 V in these positions: • 3rd, 4th, and 5th gears in D, D3, and M
C5	GRN/RED	SH D	Shift solenoid valve D control	Battery voltage in these positions: • 2nd and 5th gears in D, D3, and M 0 V in these positions: • P, R, and N • 1st, 3rd, and 4th gears in D, D3, and M
C6	BLU/BLK	SH A	Shift solenoid valve A control	Battery voltage in these positions: • R • 1st, 4th, and 5th gears in D, D3, and M 0 V in these positions: • P and N • 2nd and 3rd gears in D, D3, and M
C7	WHT/RED	NM	Input shaft (mainshaft) speed sensor signal input	With ignition switch ON (II): 0 V or about 5 V With engine at idle in the N position: About 2.5 V

PCM CONNECTOR C (22P)

Terminal Number	Wire Color	Signal	Description	Measuring Condition/Terminal Voltage
C8	BLK/RED	LS B—	A/T clutch pressure control solenoid valve B control	With ignition switch ON (II): 0 V
C9	RED	ATP D3	Transmission range switch D3 position signal input	In the D3 position: 0 V In other than the D3 position: About 5 V
C10	BLU/WHT	OP3SW	3rd clutch transmission fluid pressure switch signal input	With ignition switch ON (II): About 5 V (No 3rd clutch pressure)
C12	RED/WHT	ATP RVS	A/T gear position switch RVS (R position) signal input	In the R position: 0 V In other the R position: About 5 V
C13	BLU/RED	OP2SW	2nd clutch transmission fluid pressure switch signal input	With ignition switch ON (II): About 5 V (No 2nd clutch pressure)
C14	RED/YEL	ATFT	ATF temperature sensor signal input	With ignition switch ON (II): 0.2 V—4.8 V With ignition switch OFF: 0 V
C15	BLU	NC	Output shaft (countershaft) speed sensor signal input	With ignition switch ON (II): 0 V or about 5 V With driving: About 2.5 V
C16	WHT/BLU	LS C—	A/T clutch pressure control solenoid valve C control	With ignition switch ON (II): 0 V
C18	BLU/YEL	ATP FWD	Transmission range switch D and D3 position signals input	In the D and D3 position: 0 V In other than the D and D3 position: 5 V—battery voltage

PCM CONNECTOR D (17P)

Terminal Number	Wire Color	Signal	Description	Measuring Condition/Terminal Voltage
D2	BRN	S-MODE	Transmission gear selection switch S mode switch signal input	In the M position: 0 V In other than the M position: About 5 V
D3	WHT/BLU	S-UP	Transmission gear selection switch upshift switch signal input	In the M position: • Shift lever pushed toward upshift position (marked with +): 0 V • Shift lever released in neutral position: About 5 V
D4	BLK/RED	ATP N	Transmission range switch N position signal input	In the N position: 0 V In other than the N position: 5 V—battery voltage
D5	WHT	ATP R	Transmission range switch R position signal input	In the R position: 0 V In other than the R position: 5 V—battery voltage
D6	BLU/BLK	ATP P	Transmission range switch P position signal input	In the P position: 0 V In other than the P position: 5 V—battery voltage
D9	BRN/WHT	S-DN	Transmission gear selection switch downshift switch signal input	In the M position: • Shift lever pushed toward downshift position (marked with —): 0 V • Shift lever released in neutral position: About 5 V
D10	RED	ATP D	Transmission range switch D position signal input	In the D position: 0 V In other than the D position: About 5 V
D12	BLU/ORN	CCS	Downshift signal input from cruise control unit	When cruise control is used: Pulsing signal

(cont'd)

System Description (cont'd)

Electronic Control System (cont'd)

2002-2004 Models

PCM Inputs and Outputs (cont'd)

PCM Connector Terminal Locations

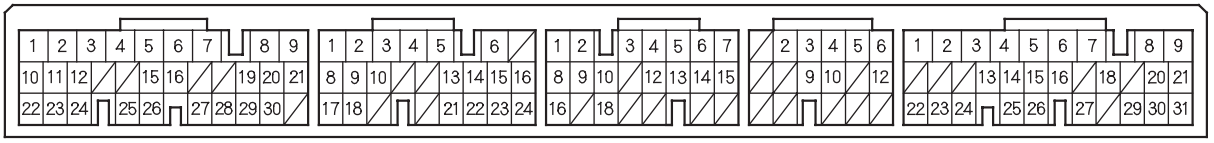

PCM CONNECTOR E (20P)

Terminal Number	Wire Color	Signal	Description	Measuring Conditions/Terminal Voltage
E7	RED/YEL	MRLY	Power supply circuit from main relay 1	With ignition switch ON (II): 0 V With ignition switch OFF: Battery voltage
E9	BLK/YEL	IG1	Power supply circuit for solenoid valves	With ignition switch ON (II): Battery voltage With ignition switch OFF: 0 V
E13	WHT/BLU	SLC	Shift lock control	With ignition switch ON (II), in the P position, brake pedal pressed, and accelerator pedal released: 5 V—battery voltage
E22	WHT/BLK	BK SW	Brake pedal position switch signal input	Brake pedal pressed: Battery voltage Brake pedal released: 0 V
E23	LT BLU	K-LINE	Communication line PCM-to-DLC	With ignition switch ON (II): Battery voltage
E24	YEL	SEFMJ	Multiplex line PCM-to-gauge assembly	With ignition switch ON (II): About 5 V
E29	BRN	SCS	SCS terminal signal input	With ignition switch ON (II) • SCS terminal on the DLC open: About 5 V or battery voltage • SCS terminal on the DLC short-circuited to ground: 0 V

2005-2006 Models

PCM Inputs and Outputs

The PCM terminal voltage and measuring conditions are shown for the connector terminals that are related to the A/T control system. The other terminal voltage and measuring conditions are described in Fuel and Emission.

PCM Connector Terminal Locations

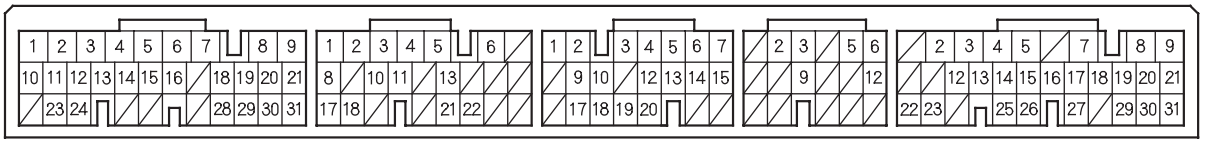

A (31P) **B (24P)** **C (22P)** **D (17P)** **E (31P)**

PCM CONNECTOR A (31P)

Terminal Number	Wire Color	Signal	Description	Measuring Conditions/Terminal Voltage
A2	YEL/BLK	IGP2	Power supply circuit from main relay	With ignition switch ON (II): Battery voltage With ignition switch OFF: 0 V
A3	YEL/BLK	IGP1	Power supply circuit from main relay	With ignition switch ON (II): Battery voltage With ignition switch OFF: 0 V
A4	BLK	PG2	Ground	Less than 1.0 V at all times
A5	BLK	PG1	Ground	Less than 1.0 V at all times
A8	BRN/YEL	LG2	Ground	Less than 1.0 V at all times
A9	BRN/YEL	LG1	Ground	Less than 1.0 V at all times
A18	BLU	NC	Output shaft (countershaft) speed sensor signal input	With ignition switch ON (II): 0 V or about 5 V While driving: About 2.5 V
A20	YEL/BLU	VCC2	Power supply circuit for sensors	With ignition switch ON (II): About 5 V With ignition switch OFF: 0 V
A21	YEL/RED	VCC1	Power supply circuit for sensors	With ignition switch ON (II): About 5 V With ignition switch OFF: 0 V
A23	GRN/YEL	SG2	Sensor ground	Less than 1.0 V at all times
A24	GRN/WHT	SG1	Sensor ground	Less than 1.0 V at all times

(cont'd)

System Description (cont'd)

Electronic Control System (cont'd)

2005-2006 Models

PCM Inputs and Outputs (cont'd)

PCM Connector Terminal Locations

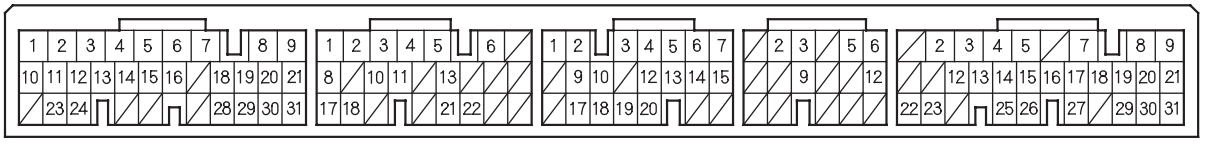

A (31P) **B (24P)** **C (22P)** **D (17P)** **E (31P)**

PCM CONNECTOR C (22P)

Terminal Number	Wire Color	Signal	Description	Measuring Condition/Terminal Voltage
C1	RED/BLK	LS A	A/T clutch pressure control solenoid valve A control	With ignition switch ON (II): Pulsing signal
C2	GRN	SH C	Shift solenoid valve C control	Battery voltage in these positions: • N • 1st, 3rd, and 5th gears in D, D3, and M • Reverse inhibit in R 0 V in these positions: • P and R • 2nd and 4th gears in D, D3, and M
C3	YEL	SH E	Shift solenoid valve E control	Battery voltage in these positions: • P and R 0 V in these positions: • Reverse inhibit in R • N • 1st gear in D, D3, and M
C4	GRN/WHT	SH B	Shift solenoid valve B control	Battery voltage in these positions: • P, R, and N • 1st and 2nd gears in D, D3, and M 0 V in these positions: • Reverse inhibit in R • 3rd, 4th, and 5th gears in D, D3, and M
C5	GRN/RED	SH D	Shift solenoid valve D control	Battery voltage in these positions: • 2nd and 5th gears in D, D3, and M 0 V in these positions: • Reverse inhibit in R • P, R, and N • 1st, 3rd, and 4th gears in D, D3, and M
C6	BLU/BLK	SH A	Shift solenoid valve A control	Battery voltage in these positions: • R • 1st, 4th, and 5th gears in D, D3, and M 0 V in these positions: • Reverse inhibit in R • P and N • 2nd and 3rd gears in D, D3, and M
C7	BLU/YEL	LS C	A/T clutch pressure control solenoid valve C control	With ignition switch ON (II): Pulsing signal

PCM CONNECTOR C (22P)

Terminal Number	Wire Color	Signal	Description	Measuring Condition/Terminal Voltage
C9	RED	ATP D3	Transmission range switch D3 position signal input	In the D3 position: 0 V In other than the D3 position: Battery voltage
C10	BLU/WHT	OP3SW	3rd clutch transmission fluid pressure switch signal input	With ignition switch ON (II): About 5 V With 3rd clutch pressure: 0 V
C12	RED/WHT	ATP RVS	Transmission range switch RVS (R position) signal input	In R position: 0 V In other than the R position: Battery voltage
C13	BLU/RED	OP2SW	2nd clutch transmission fluid pressure switch signal input	With ignition switch ON (II): About 5 V With 2nd clutch pressure: 0 V
C14	RED/YEL	ATFT	ATF temperature sensor signal input	With ignition switch ON (II): 0.2 V—4.8 V (Depending on ATF temperature) With ignition switch OFF: 0 V
C15	BRN/WHT	LS B	A/T clutch pressure control solenoid valve B control	With ignition switch ON (II): Pulsing signal
C17	YEL	ATP D	Transmission range switch D position signal input	In the D position: 0 V In other than the D position: Battery voltage
C18	BLU/YEL	ATP FWD	Transmission range switch D and D3 position signals input	In the D and D3 positions: 0 V In other than the D and D3 positions: Battery voltage
C19	WHT/RED	NM	Input shaft (mainshaft) speed sensor signal input	With ignition switch ON (II): 0 V or about 5 V With engine at idling in N position: About 2.5 V
C20	RED/BLK	ATP N	Transmission range switch N position signal input	In the N position: 0 V In other than the N position: Battery voltage

(cont'd)

System Description (cont'd)

Electronic Control System (cont'd)

2005-2006 Models

PCM Inputs and Outputs (cont'd)

PCM Connector Terminal Locations

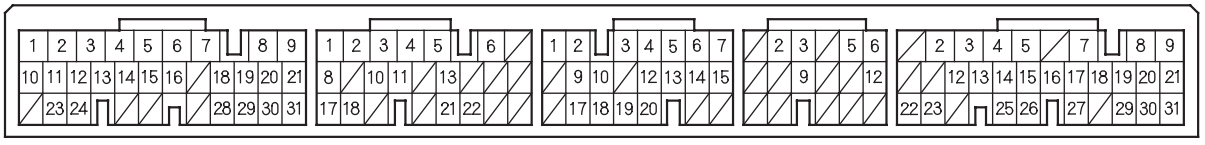

PCM CONNECTOR D (17P)

Terminal Number	Wire Color	Signal	Description	Measuring Conditions/Terminal Voltage
D2	BRN	S-MODE	Transmission gear selection switch S mode switch signal input	In M position: 0 V In other than M position: Battery voltage
D3	WHT/BLU	S-UP	Transmission gear selection switch upshift switch signal input	In M position: • Shift lever pushed toward upshift position (marked with +): 0 V • Shift lever released in neutral position: Battery voltage
D5	WHT	ATP R	Transmission range switch R position input	In the R position: 0 V In other than the R position: Battery voltage
D6	BLU/BLK	ATP P	Transmission range switch P position input	In the P position: 0 V In other than the P position: Battery voltage
D9	BRN/WHT	S-DN	Transmission gear selection switch downshift switch signal input	In M position: • Shift lever pushed toward downshift position (marked with −): 0V • Shift lever released in neutral position: Battery voltage
D12	BLU/ORN	CCS	Downshift signal input from cruise control unit	When cruise control is used: Pulsing signal

PCM CONNECTOR E (31P)

Terminal Number	Wire Color	Signal	Description	Measuring Conditions/Terminal Voltage
E2	WHT/BLU	SLC	Shift lock control	With ignition switch ON (II), in the P position, brake pedal pressed, and accelerator released: 5 V-battery voltage
E7	RED/YEL	MRLY	Power supply circuit from main relay 1	With ignition switch ON (II): 0 V With ignition switch OFF: Battery voltage
E9	BLK/YEL	IG1	Power supply circuit for solenoid valves	With ignition switch ON (II): Battery voltage With ignition switch OFF: 0 V
E13	YEL	SEFMJ	Multiplex line PCM-to-gauge assembly	With ignition switch ON (II): About 5 V
E22	WHT/BLK	BKSW	Brake pedal position switch signal input	Brake pedal pressed: Battery voltage Brake pedal released: 0 V
E23	LT BLU	K-LINE	Communication line PCM-to-DLC	With ignition switch ON (II): Battery voltage
E29	BRN	SCS	Detects service check signal	With the SCS shorted with the HDS: About 0 V With the SCS open: About 5 V

Hydraulic Controls

Valve Bodies

The valve body includes the main valve body, the regulator valve body, and the servo body. The ATF pump is driven by splines on the left end of the torque converter which is attached to the engine. Fluid flows through the regulator valve to maintain specified pressure through the main valve body to the manual valve, directing pressure to the shift valves and to each of the clutches via the solenoid valves. The shift solenoid valves A, B, C, D, and E are bolted on the servo body. The A/T clutch pressure control solenoid valves A, B, and C are mounted on the outside of the transmission housing.

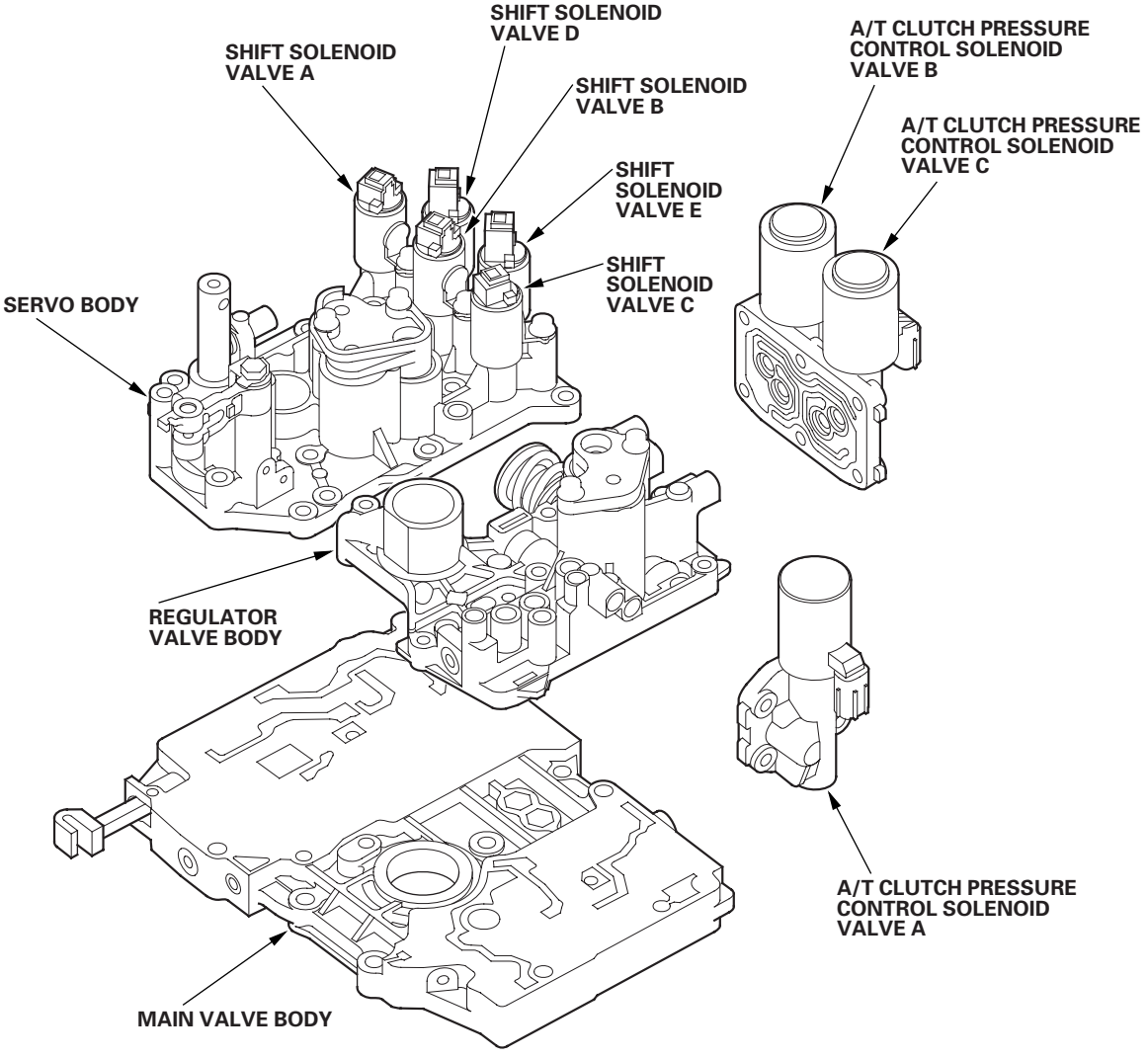

(cont'd)

System Description (cont'd)

Hydraulic Controls (cont'd)

Main Valve Body
The main valve body contains the manual valve, the shift valves A, B, C, and E, the relief valve, the lock-up control valve, the cooler check valve, the servo control valve, and the ATF pump gears. The primary function of the main valve body is to switch fluid pressure on and off, and to control hydraulic pressure going to the hydraulic control system.

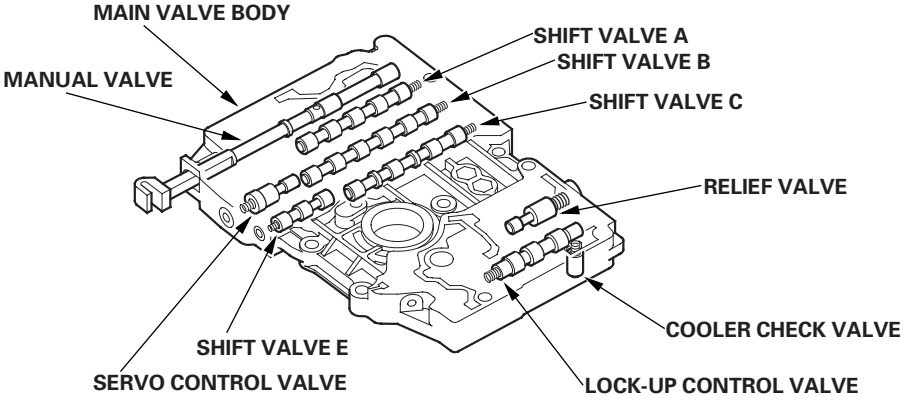

Regulator Valve Body
The regulator valve body contains the regulator valve, the torque converter check valve, lock-up shift valve, and the 1st and 3rd accumulators.

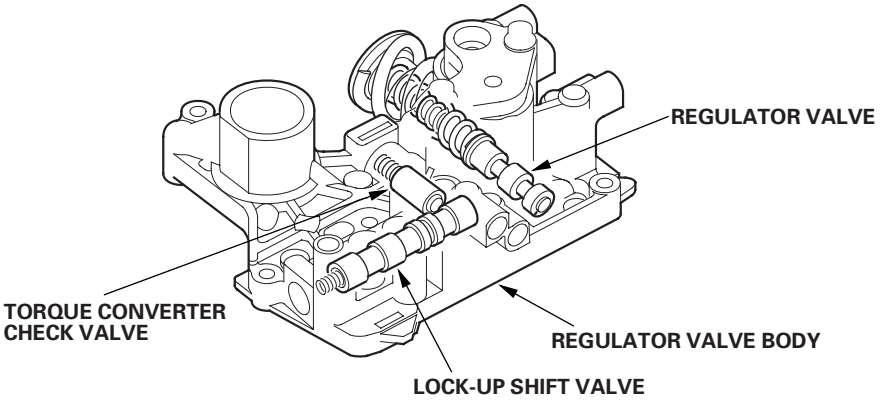

Regulator Valve

The regulator valve maintains a constant hydraulic pressure from the ATF pump to the hydraulic control system, while also furnishing fluid to the lubrication system and torque converter. Fluid from the ATF pump flows through B and B′. Fluid entering from B flows through the valve orifice to the A cavity. This pressure of the A cavity pushes the regulator valve to the right side, and this movement of the regulator valve uncovers the fluid port to the torque converter and the relief valve. The fluid flows out to the torque converter and the relief valve, and the regulator valve moves to the left side. According to the level of the hydraulic pressure through B, the position of the regulator valve changes, and the amount of fluid from B′ through torque converter also changes. This operation is continued, maintaining the line pressure.

NOTE: When used, ''left'' or ''right'' indicates direction on the illustration.

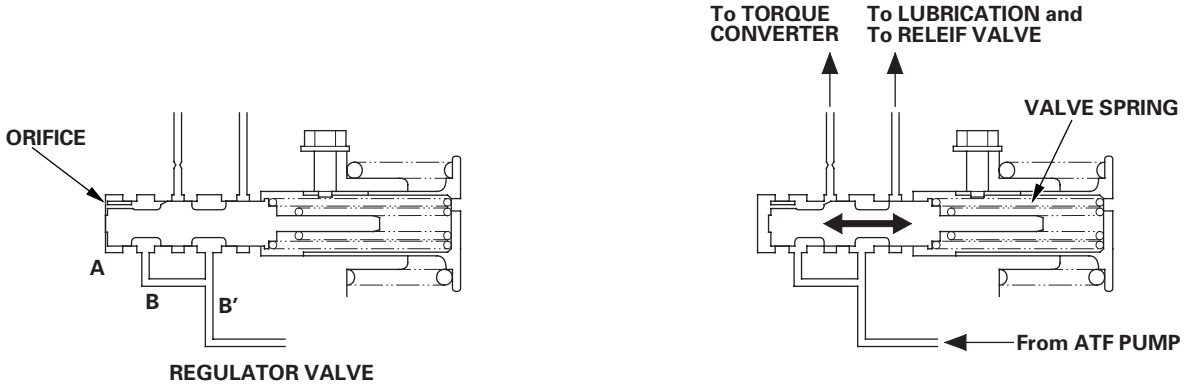

Increases in hydraulic pressure according to torque are performed by the regulator valve using stator torque reaction. The stator shaft is splined with the stator in the torque converter, and its arm end contacts the regulator spring cap. When the vehicle is accelerating or climbing (torque converter range), stator torque reaction acts on the stator shaft, and the stator arm pushes the regulator spring cap in the direction of the arrow in proportion to the reaction. The stator reaction spring compresses, and the regulator valve moves to increase the line pressure which is regulated by the regulator valve. The line pressure reaches its maximum when the stator torque reaction reaches its maximum.

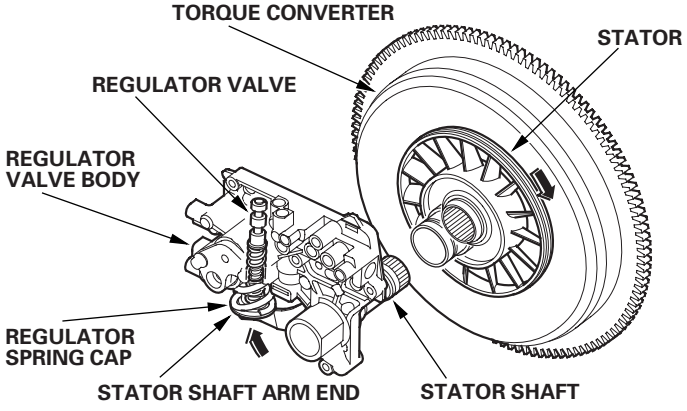

(cont'd)

System Description (cont'd)

Hydraulic Controls (cont'd)

Servo Body
The servo body contains the servo valve, the shift valve D, accumulators for 2nd, 4th, and 5th, and shift solenoid valves for A, B, C, D, and E.

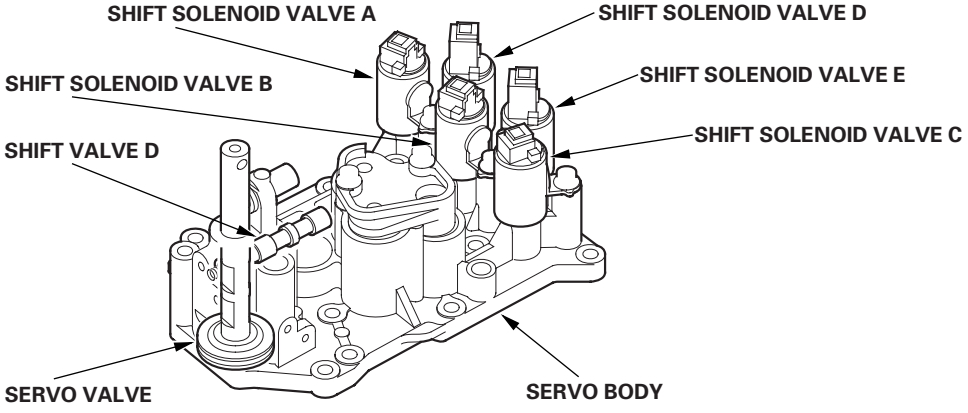

Accumulator
The accumulators are located in the regulator valve body and the servo body. The regulator valve body contains the 1st and 3rd accumulators, and the servo body contains the 2nd, 4th, and 5th accumulators.

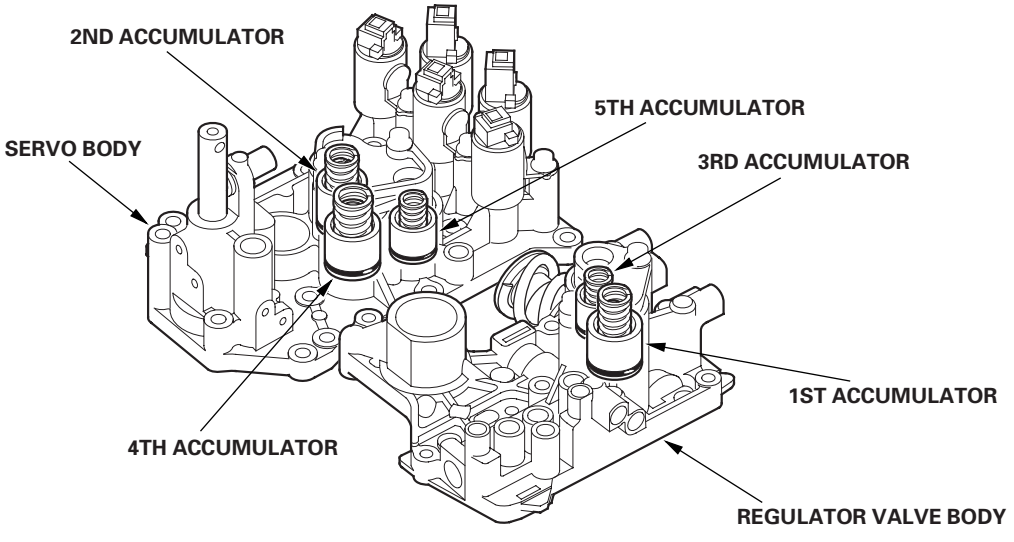

Hydraulic Flow

Distribution of Hydraulic Pressure

As the engine turns, the ATF pump start operate. Automatic transmission fluid (ATF) is drawn through the ATF strainer (filter) and discharged into the hydraulic circuit. Then, ATF flowing from the ATF pump becomes line pressure that's regulated by the regulator valve. Torque converter pressure from the regulator valve enters the torque converter through the lock-up shift valve, and it is discharged from the torque converter. The torque converter check valve prevents torque converter pressure from rising.

The PCM controls the shift solenoid valves ON and OFF. The shift solenoid valve intercepts line pressure from the ATF pump via the manual valve when the shift solenoid valve is OFF. When the shift solenoid valve is turned ON, line pressure changes to shift solenoid valve pressure at the shift solenoid valve, then the solenoid valve pressure flows to the shift valve. Applying shift solenoid pressure to the shift valves moves the position of the shift valve, and switches the port of the hydraulic circuit. The PCM also controls A/T clutch pressure control solenoid valves A, B, and C. The A/T clutch pressure control solenoid valves regulate hydraulic pressure, and apply the pressure to the clutches to engage smoothly. The clutches receive optimum clutch pressure which is regulated by the A/T clutch pressure control solenoid valves for comfortable driving and shifting under all conditions.

Hydraulic pressure at the port is as follows:

PORT NO.	DESCRIPTION OF PRESSURE	PORT NO.	DESCRIPTION OF PRESSURE
1	LINE	SB	SHIFT SOLENOID VALVE B
3	LINE	SC	SHIFT SOLENOID VALVE C
3′	LINE	SD	SHIFT SOLENOID VALVE D
4	LINE	SE	SHIFT SOLENOID VALVE E
4′	LINE	10	1ST CLUTCH
4′′	LINE	20	2ND CLUTCH
7	LINE	30	3RD CLUTCH
1A	LINE or A/T CLUTCH PRESSURE CONTROL SOLENOID VALVE A	40	4TH CLUTCH
1B	LINE	50	5TH CLUTCH
3A	LINE	55	A/T CLUTCH PRESSURE CONTROL SOLENOID VALVE A
3B	LINE	55′	A/T CLUTCH PRESSURE CONTROL SOLENOID VALVE A
3C	LINE	56	A/T CLUTCH PRESSURE CONTROL SOLENOID VALVE B
5A	LINE	57	A/T CLUTCH PRESSURE CONTROL SOLENOID VALVE C
5B	LINE	90	TORQUE CONVERTER
5C	LINE	91	TORQUE CONVERTER
5D	LINE	92	TORQUE CONVERTER
5E	LINE or A/T CLUTCH PRESSURE CONTROL SOLENOID VALVE B	93	ATF COOLER
5F	LINE or A/T CLUTCH PRESSURE CONTROL SOLENOID VALVE A or B	94	TORQUE CONVERTER
5G	A/T CLUTCH PRESSURE CONTROL SOLENOID VALVE B	95	LUBRICATION
5H	A/T CLUTCH PRESSURE CONTROL SOLENOID VALVE C	96	TORQUE CONVERTER
5J	A/T CLUTCH PRESSURE CONTROL SOLENOID VALVE C	97	TORQUE CONVERTER
5K	A/T CLUTCH PRESSURE CONTROL SOLENOID VALVE C	99	SUCTION
5L	A/T CLUTCH PRESSURE CONTROL SOLENOID VALVE C	X	DRAIN
5N	A/T CLUTCH PRESSURE CONTROL SOLENOID VALVE C	HX	HIGH POSITION DRAIN
SA	SHIFT SOLENOID VALVE A	AX	AIR DRAIN

(cont'd)

System Description (cont'd)

Hydraulic Flow (cont'd)

N Position

The PCM controls the shift solenoid valves. The conditions of the shift solenoid valves and positions of the shift valves are as follows:

- Shift solenoid valve A: OFF, and shift valve A stays on the right side
- Shift solenoid valve B: ON, and shift valve B moves to left side
- Shift solenoid valve C: ON, and shift valve C moves to left side
- Shift solenoid valve D: OFF, and shift valve D stays on the left side
- Shift solenoid valve E: OFF, and shift valve E stays on the left side

Line pressure (1) flows to the shift solenoid valves and the A/T clutch pressure control solenoid valve A, and changes to A/T clutch pressure control solenoid valve A pressure (55) at the A/T clutch pressure control solenoid valve A. A/T clutch pressure control solenoid valve A pressure (55) becomes line pressure (1B) at shift valve A, and stops at the manual valve. Under this condition, hydraulic pressure is not applied to the clutches.

NOTE: When used, ''left'' or ''right'' indicates direction on the hydraulic circuit.

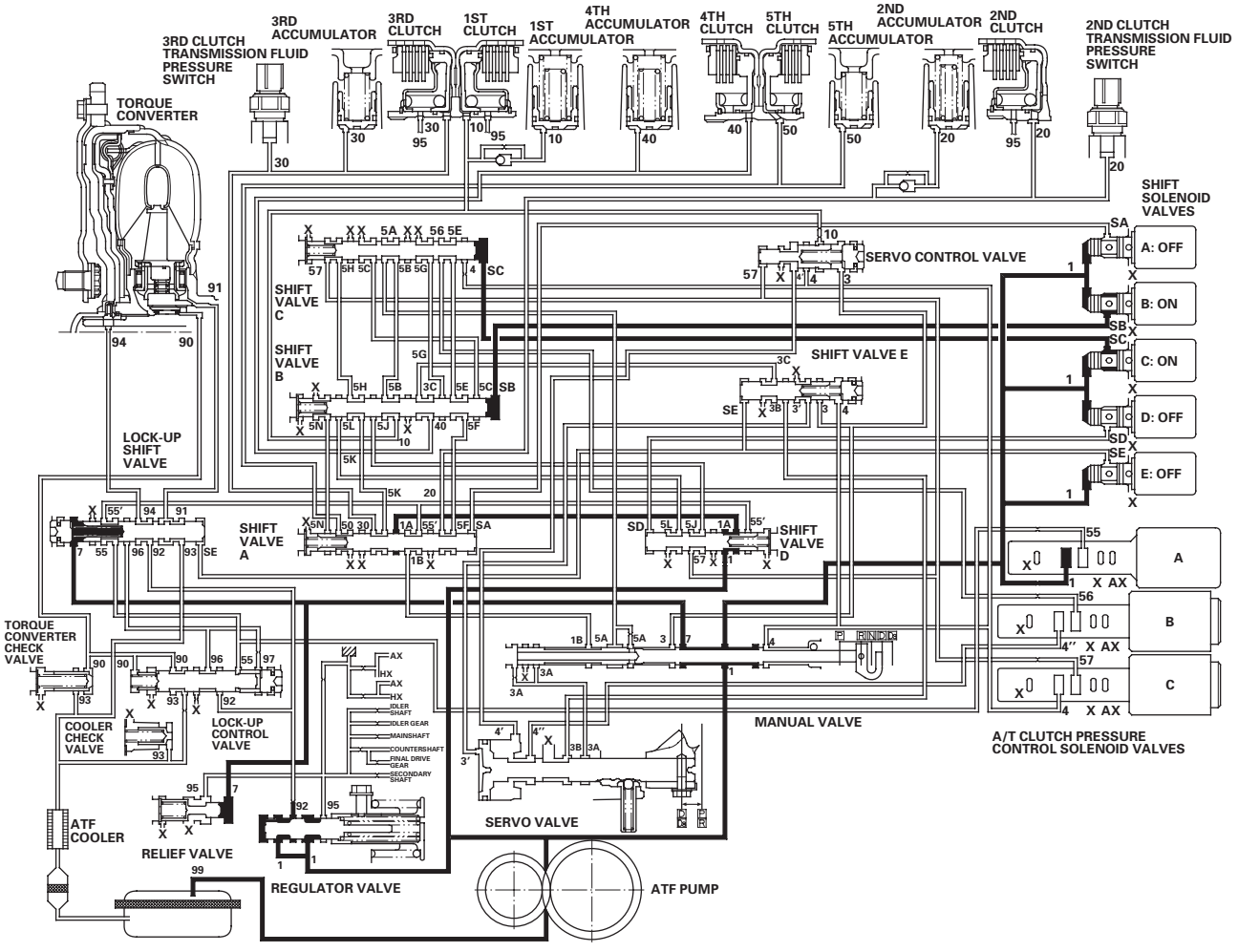

D Position: 1st gear shifting from N position

Shift solenoid valves remain the same as in the N position when shifting to the D position from N. The manual valve is moved to the D position, and switches the port of line pressure (4) leading to the A/T clutch pressure control solenoid valve C. Hydraulic pressure line to the 1st clutch from the A/T clutch pressure control solenoid valve A is available as shift solenoid valve A is OFF, B and C stay ON. A/T clutch pressure control solenoid valve A pressure (55) changes to 1st clutch pressure (10) at the shift valve B, and flows to the 1st clutch. The 1st clutch is engaged gently when shifting to the D position from N.

NOTE: When used, ''left'' or ''right'' indicates direction on the hydraulic circuit.

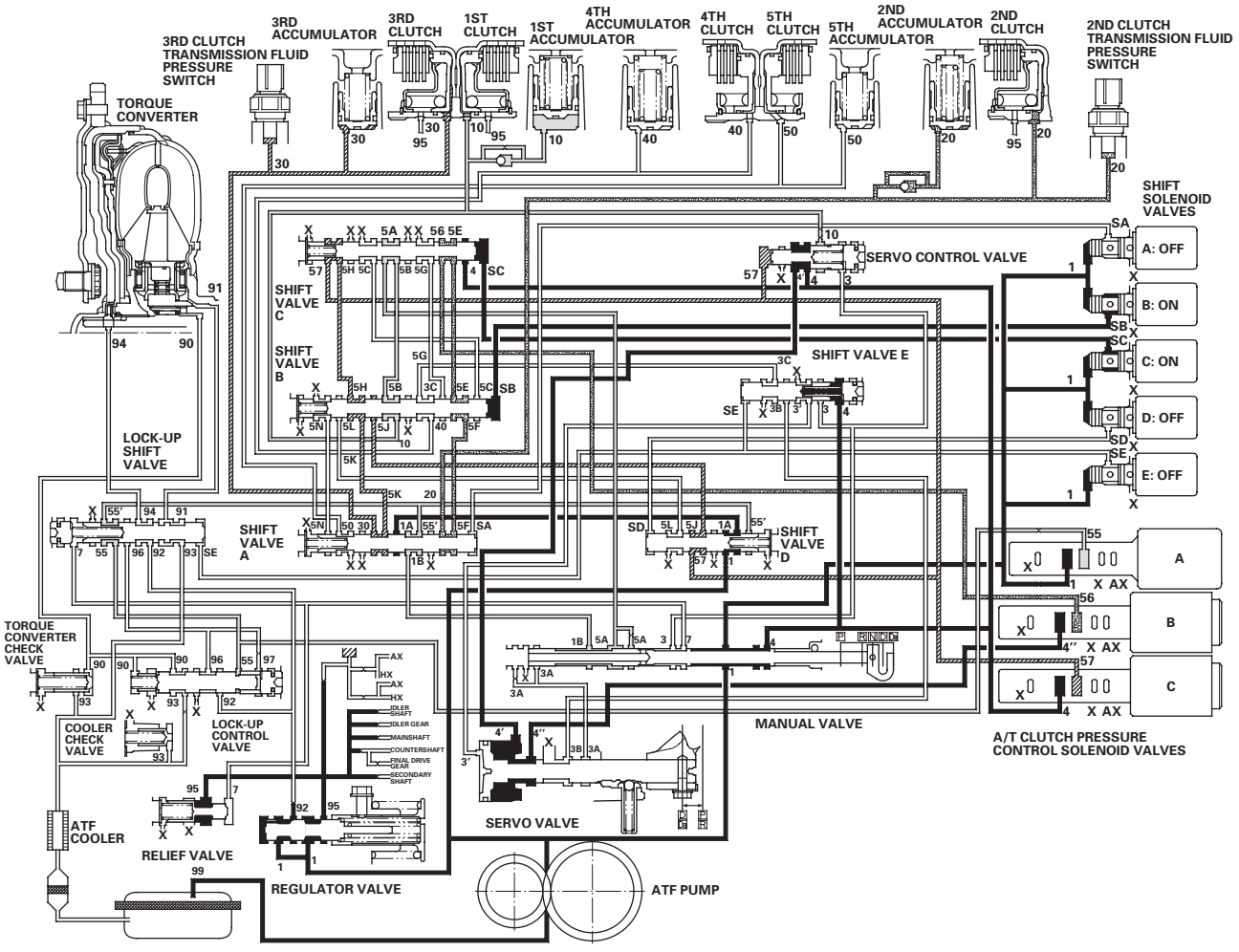

(cont'd)

System Description (cont'd)

Hydraulic Flow (cont'd)

D Position: Driving in 1st gear
The PCM turns shift solenoid valves A ON, and keeps B and C ON, and D and E OFF. Shift solenoid valve A pressure (SA) is applied to the right side of shift valve A. Shift valve A is moved to the left side to uncover the line pressure port leading to the 1st clutch, and to cover the A/T clutch pressure control solenoid valve pressure port.

Fluid flows to the 1st clutch by way of:
Line pressure (1) → Shift valve D—Line pressure (1A) → Shift valve A—Line pressure (1B) → Manual valve—Line pressure (5A) → Shift valve C—Line pressure (5B) → Shift valve B—1st clutch pressure (10) → 1st clutch
The 1st clutch pressure (10) is applied to the 1st clutch, and the 1st clutch is engaged securely.

NOTE: When used, ''left'' or ''right'' indicates direction on the hydraulic circuit.

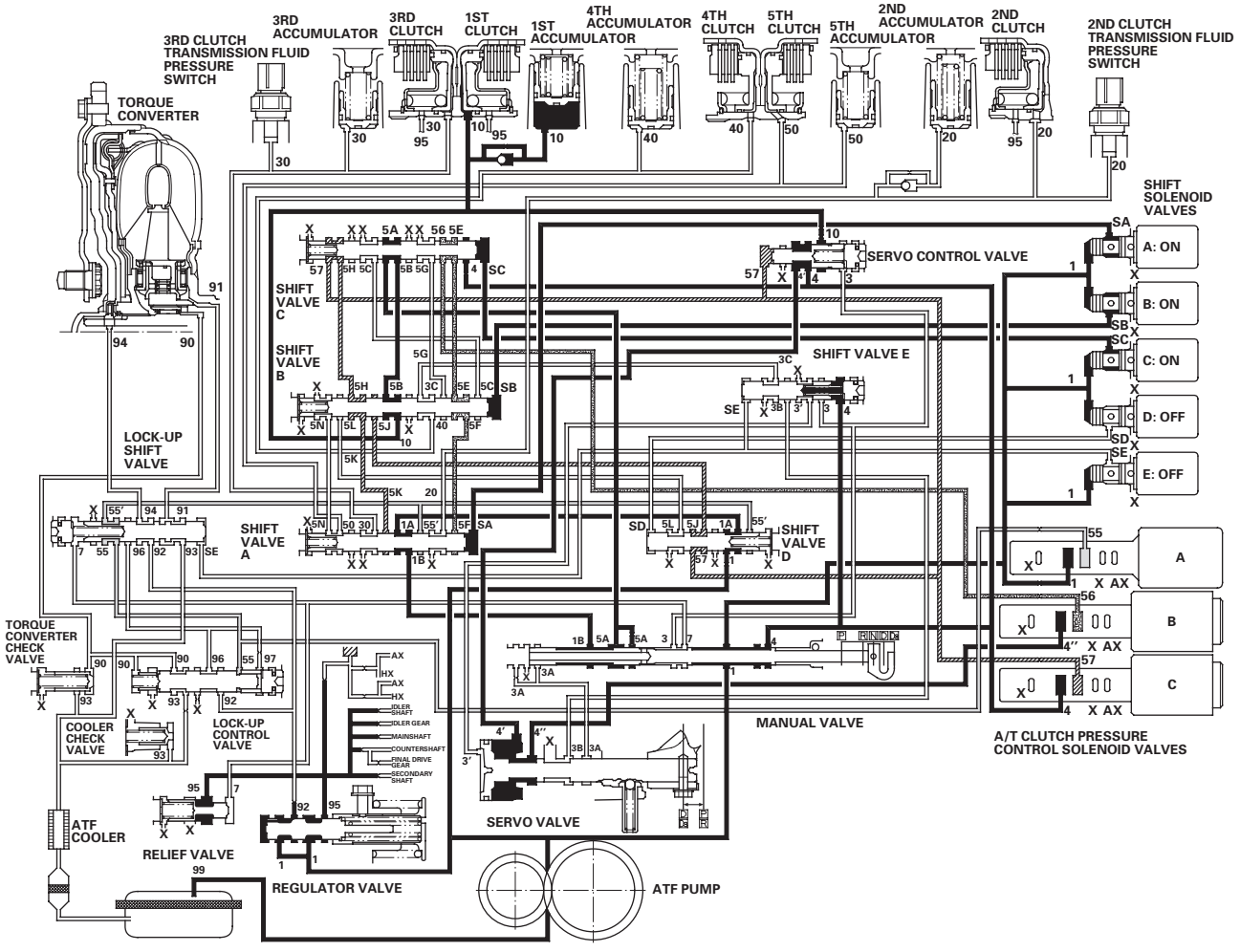

D Position: Shifting between 1st gear and 2nd gear

As the speed of the vehicle reaches the prescribed value, the PCM turns shift solenoid valve A OFF, and keeps B and C ON, and D and E OFF. Shift solenoid valve A pressure (SA) in the right side of the shift valve A is released. Shift valve A is moved to the right side to uncover the A/T clutch pressure control solenoid valve pressure ports leading to the 1st and 2nd clutches. The PCM controls the A/T clutch pressure control solenoid valves to regulate hydraulic pressure. A/T clutch pressure control solenoid valve A pressure (55) changes to 1st clutch pressure (10) at the shift valve B, and A/T clutch pressure control solenoid valve B pressure (56) changes to 2nd clutch pressure (20) at shift valve A. The 1st and 2nd clutches are engaged gently.

NOTE: When used, ''left'' or ''right'' indicates direction on the hydraulic circuit.

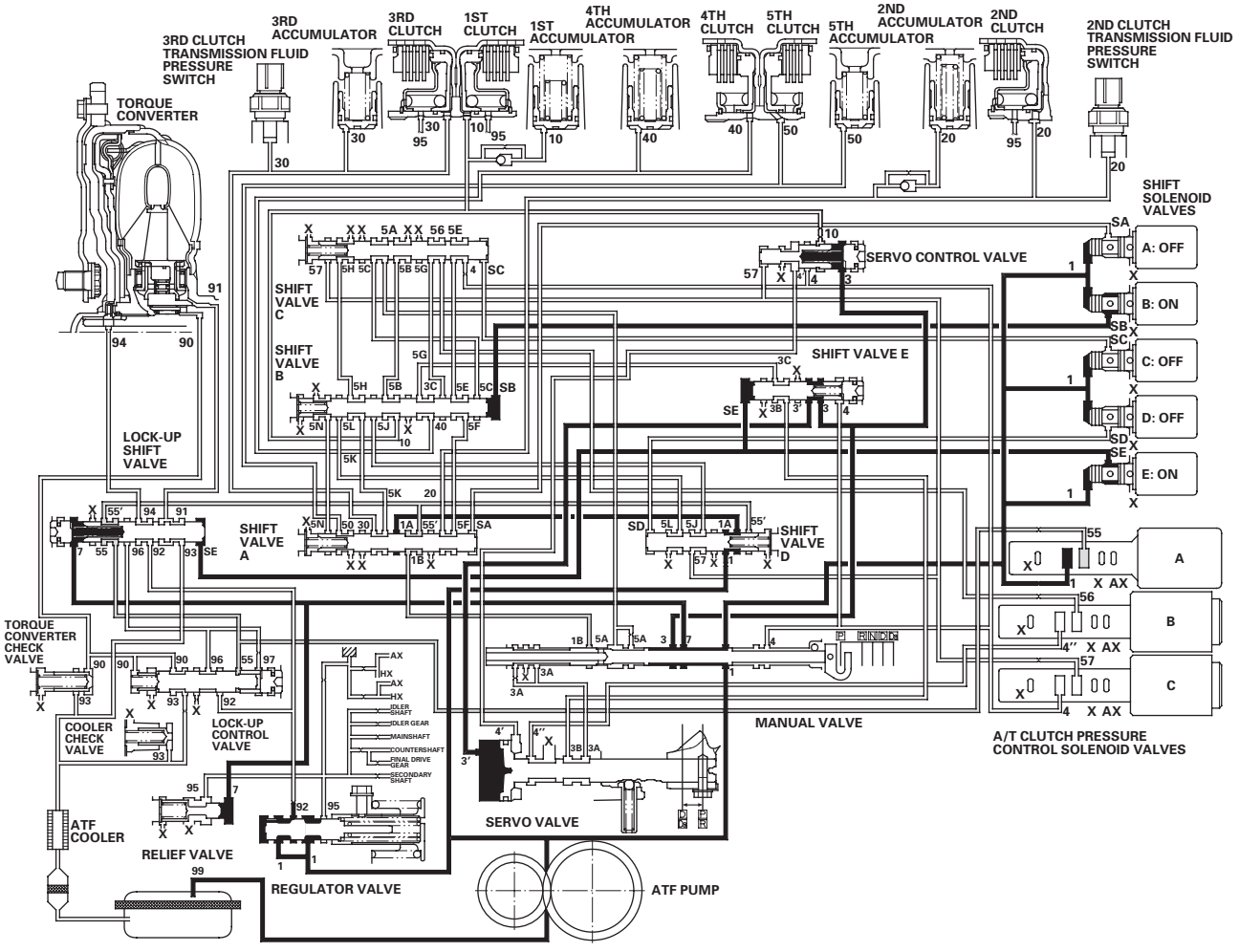

(cont'd)

System Description (cont'd)

Hydraulic Flow (cont'd)

D Position: Driving in 2nd gear
The PCM turns shift solenoid valves C OFF, D ON, and keeps A and E OFF, and B ON. Shift solenoid valve C pressure (SC) in the right side of the shift valve C is released. Shift valve C is moved to the right side to switch the ports. This movement covers A/T clutch pressure control solenoid valve pressure ports to stop at shift valves C and A, and uncover the line pressure port leading to the 2nd clutch.

Fluid flows to 2nd clutch by way of:
Line pressure (1) → Manual valve—Line pressure (4) → Shift valve C—Line pressure (5E) → Shift valve B—Line pressure (5F) → Shift valve A—2nd clutch pressure (20) → 2nd clutch
The 2nd clutch pressure (20) is applied to the 2nd clutch, and the 2nd clutch is engaged securely.

NOTE: When used, ''left'' or ''right'' indicates direction on the hydraulic circuit.

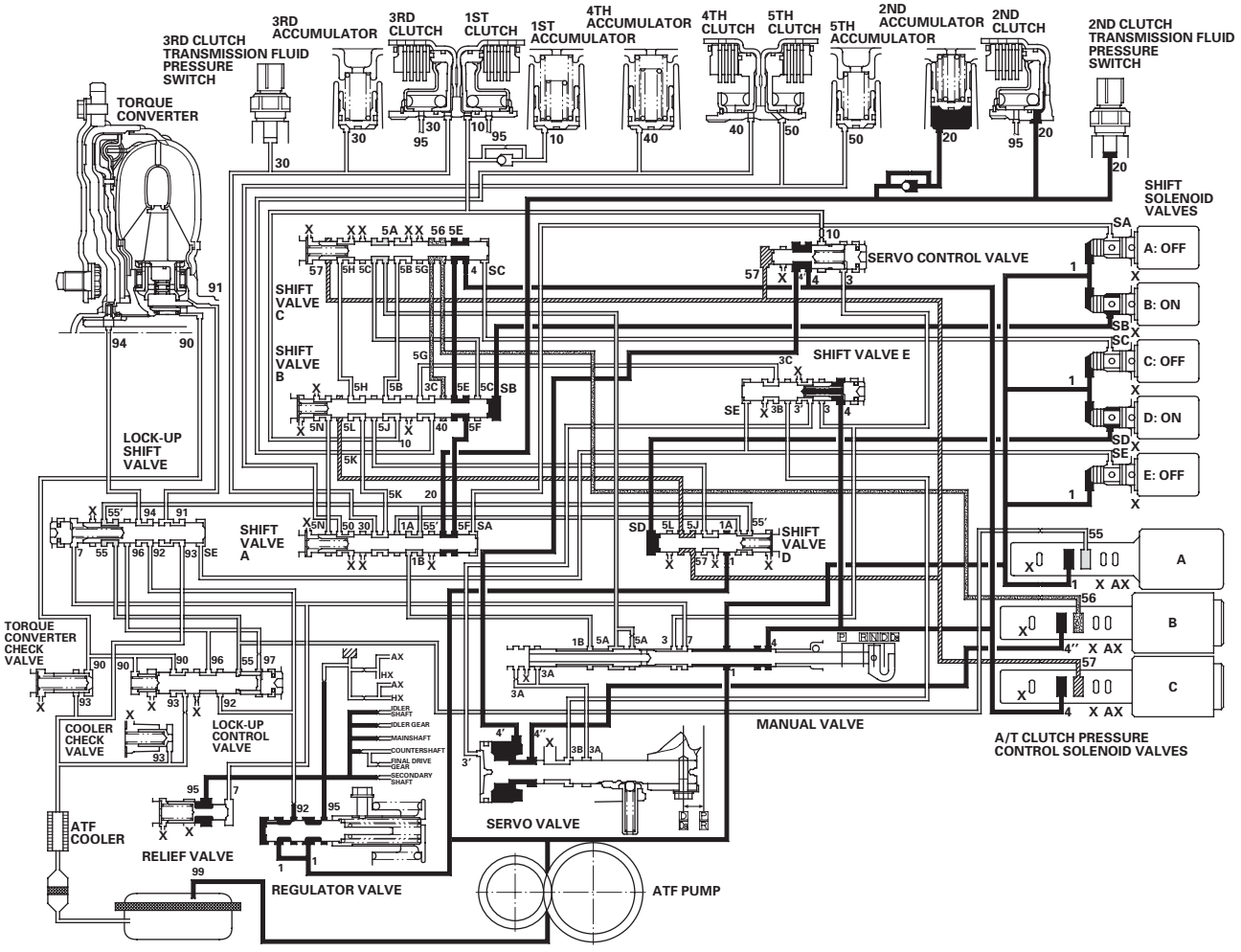

D Position: Shifting between 2nd gear and 3rd gear

As the speed of the vehicle reaches the prescribed value, the PCM turns shift solenoid valves C ON, and keeps A and E OFF, and B and D ON. Shift solenoid valve C pressure (SC) is applied to the right side of the shift valve C. Shift valve C is moved to the left side to uncover the A/T clutch pressure control solenoid valve pressure ports leading to the 2nd and 3rd clutches. The PCM controls the A/T clutch pressure control solenoid valves to regulate hydraulic pressure. A/T clutch pressure control solenoid valve B pressure (56) changes to 2nd clutch pressure (20) at the shift valve A, and A/T clutch pressure control solenoid valve C pressure (57) changes to 3rd clutch pressure (30) at the shift valve A. The 2nd and 3rd clutches are engaged gently.

NOTE: When used, ''left'' or ''right'' indicates direction on the hydraulic circuit.

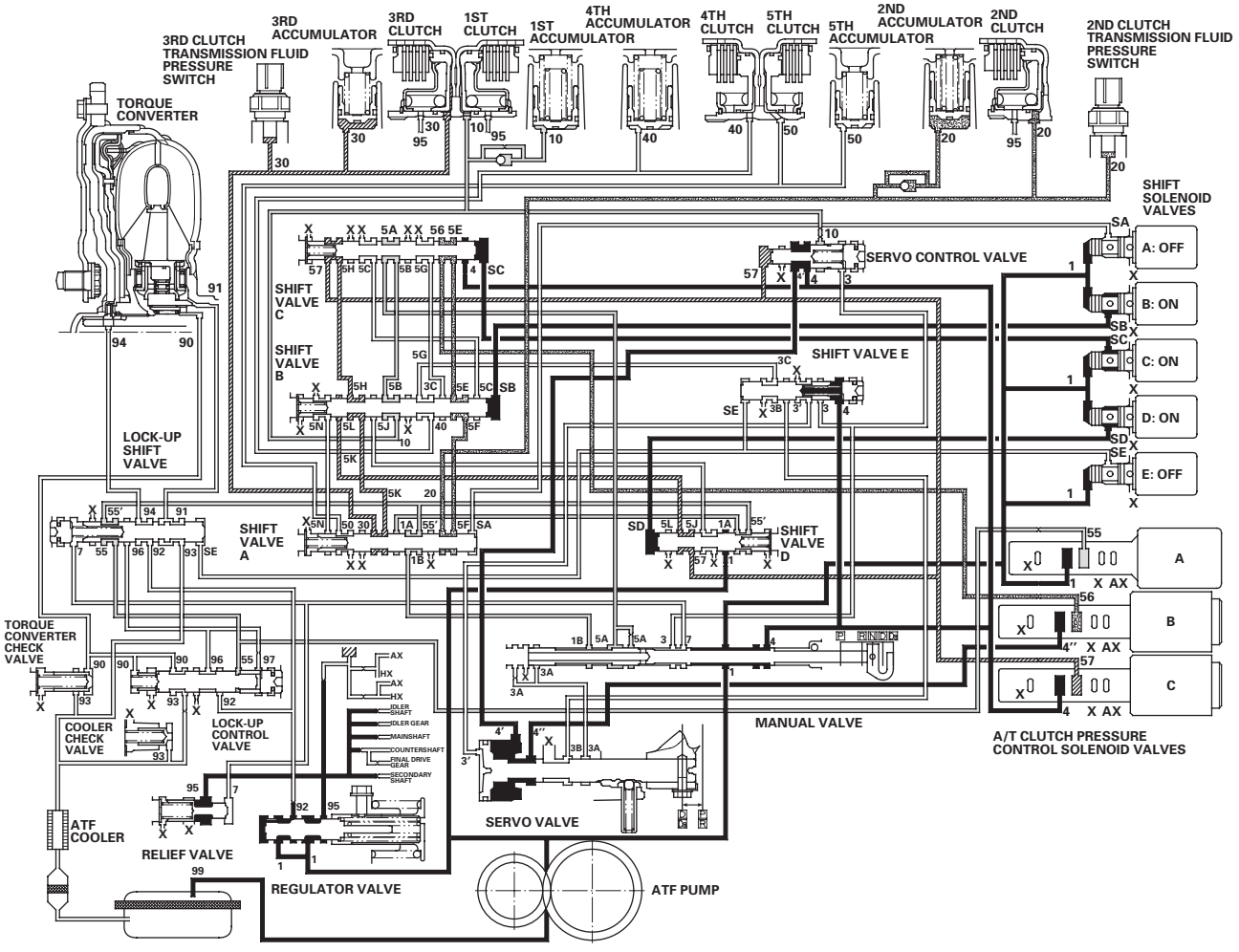

(cont'd)

System Description (cont'd)

Hydraulic Flow (cont'd)

D Position: Driving in 3rd gear

The PCM turns shift solenoid valves B and D OFF, and keeps A and E OFF, and C ON. Shift solenoid valve B pressure (SB) in the right side of the shift valve B is released, and shift valve B is moved to the right side. Shift solenoid valve D pressure (SD) in the left side of shift valve D is released, and shift valve D is moved to the left side. This valve movement switches the A/T clutch pressure control solenoid valve C pressure port leading to the 3rd clutch.
A/T clutch pressure control solenoid valve C pressure (57) changes to (5J) at the shift solenoid valve D and to (5K) at the shift valve B, and becomes 3rd clutch pressure (30) at the shift valve A. The 3rd clutch pressure (30) is applied to the 3rd clutch, and the 3rd clutch is engaged securely.

NOTE: When used, ''left'' or ''right'' indicates direction on the hydraulic circuit.

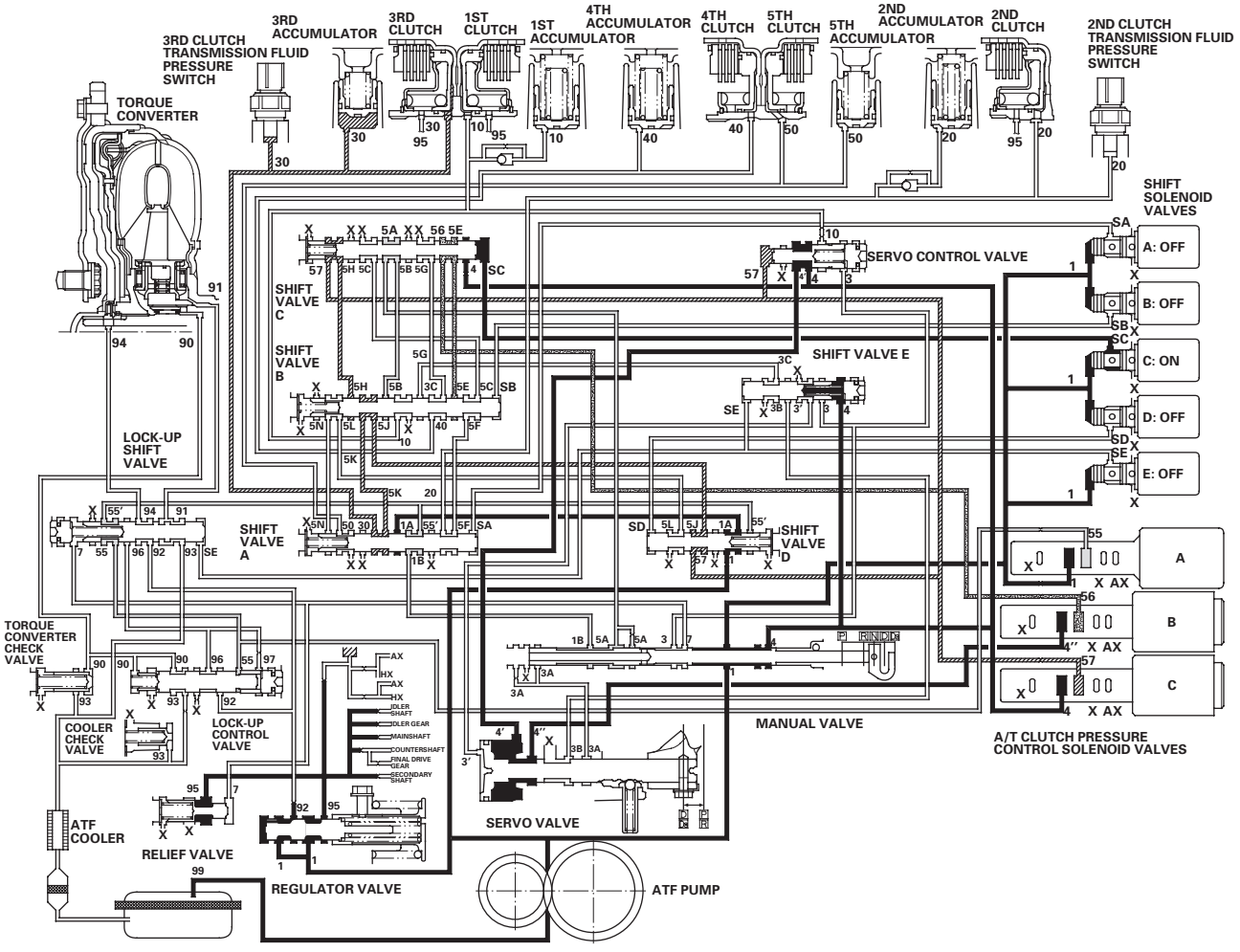

D Position: Shifting between 3rd gear and 4th gear

As the speed of the vehicle reaches the prescribed value, the PCM turns shift solenoid valves C OFF, and keeps A, B, D, and E OFF. Shift solenoid valve C pressure (SC) in the right side of the shift valve C is released. Shift valve C is moved to the right side to uncover the A/T clutch pressure control solenoid valves B and C pressure ports leading to the 3rd and 4th clutches. The PCM controls the A/T clutch pressure control solenoid valves to regulate hydraulic pressure. A/T clutch pressure control solenoid valve C pressure (57) changes to 3rd clutch pressure (30) at the shift valve A, and A/T clutch pressure control solenoid valve B pressure (56) changes to 4th clutch pressure (40) at the shift valve B. The 3rd and 4th clutches are engaged gently.

NOTE: When used, ''left'' or ''right'' indicates direction on the hydraulic circuit.

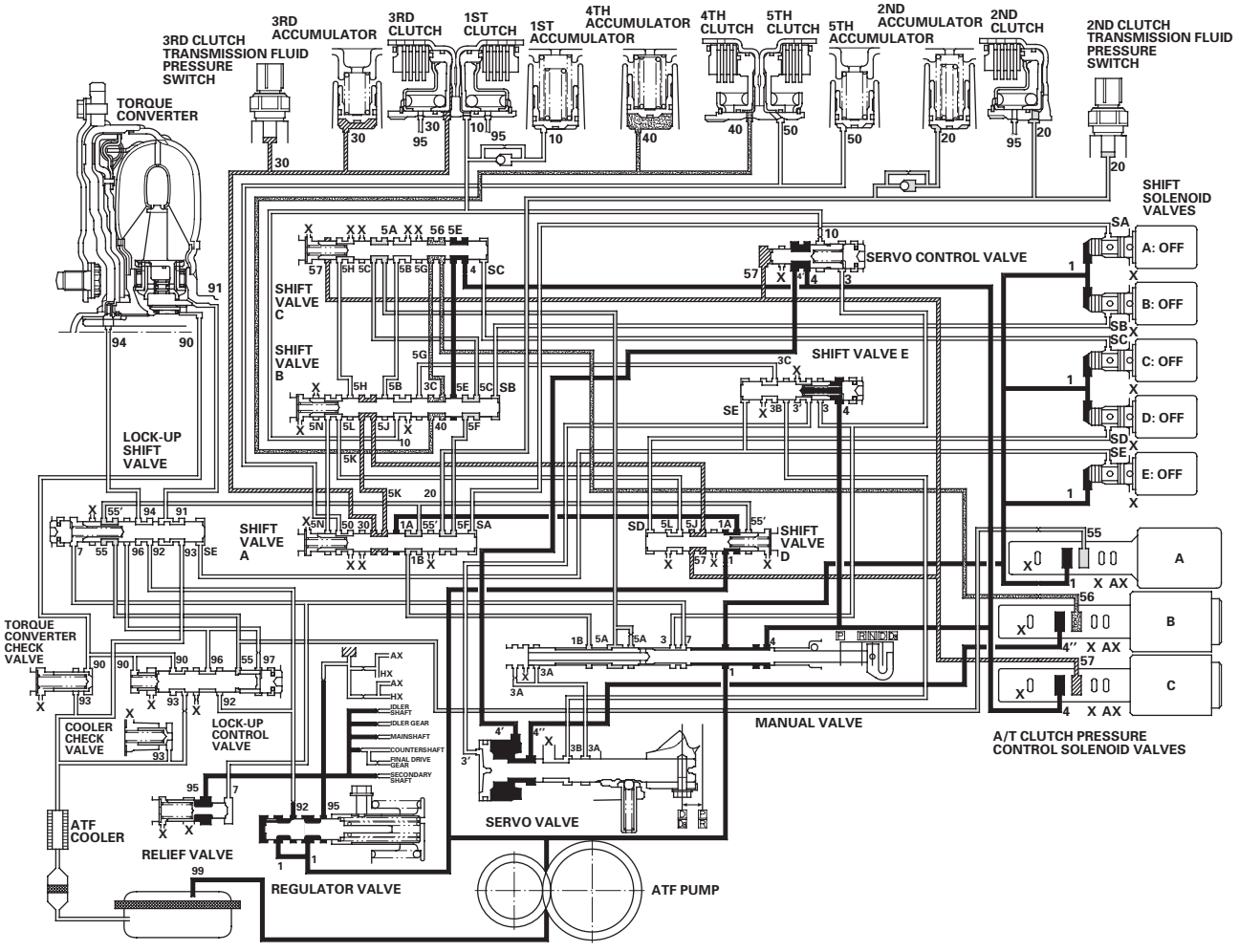

(cont'd)

System Description (cont'd)

Hydraulic Flow (cont'd)

D Position: Driving in 4th gear

The PCM turns shift solenoid valves A ON, and keeps B, C, D, and E OFF. Shift solenoid valve A pressure (SA) is applied to the right side of the shift valve A. Shift valve A is moved to the left side to cover the A/T clutch pressure control solenoid valves A and C pressure ports leading to the 2nd and 3rd clutches.

A/T clutch pressure control solenoid valve B pressure (56) changes to (5G) at the shift solenoid valve C, and becomes 4th clutch pressure (40) at the shift valve B. The 4th clutch pressure (40) is regulated to high by the A/T clutch pressure control solenoid valve B, and the 4th clutch is engaged securely.

NOTE: When used, ''left'' or ''right'' indicates direction on the hydraulic circuit.

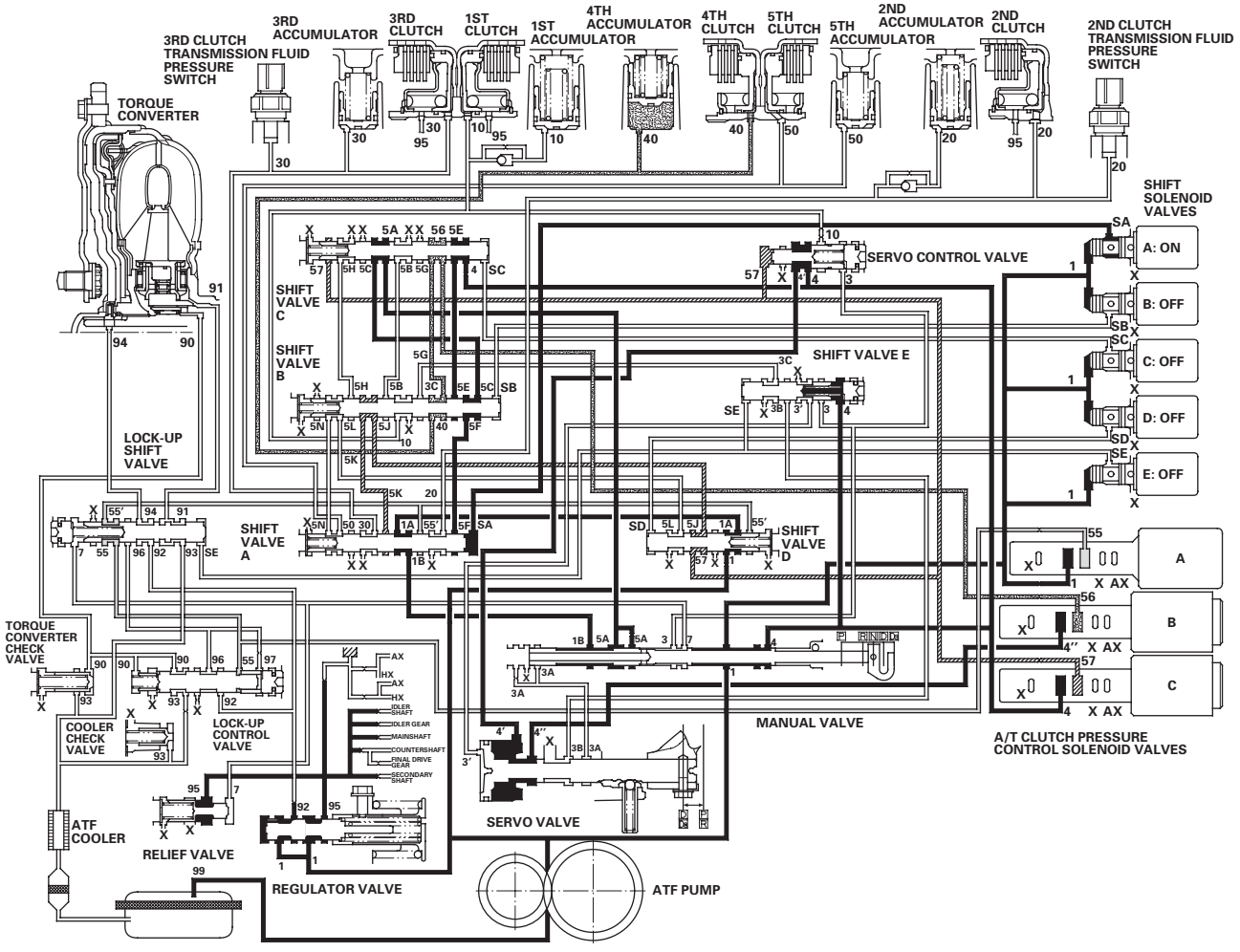

D Position: Shifting between 4th gear and 5th gear

As the speed of the vehicle reaches the prescribed value, the PCM turns shift solenoid valves D ON, and keeps A ON, and B, C, and E OFF. Shift solenoid valve D pressure (SD) is applied to the left side of the shift valve D. Shift valve D is moved to the right side to uncover the A/T clutch pressure control solenoid valve C pressure port leading to the 5th clutch. A/T clutch pressure control solenoid valve B pressure (56) changes to 4th clutch pressure (40) at shift valve B. A/T clutch pressure control solenoid valve C pressure (57) changes to (5L) at shift valve D and to (5N) at shift valve B, and becomes 5th clutch pressure (50) at shift valve A. The 4th and 5th clutches are engaged gently.

NOTE: When used, ''left'' or ''right'' indicates direction on the hydraulic circuit.

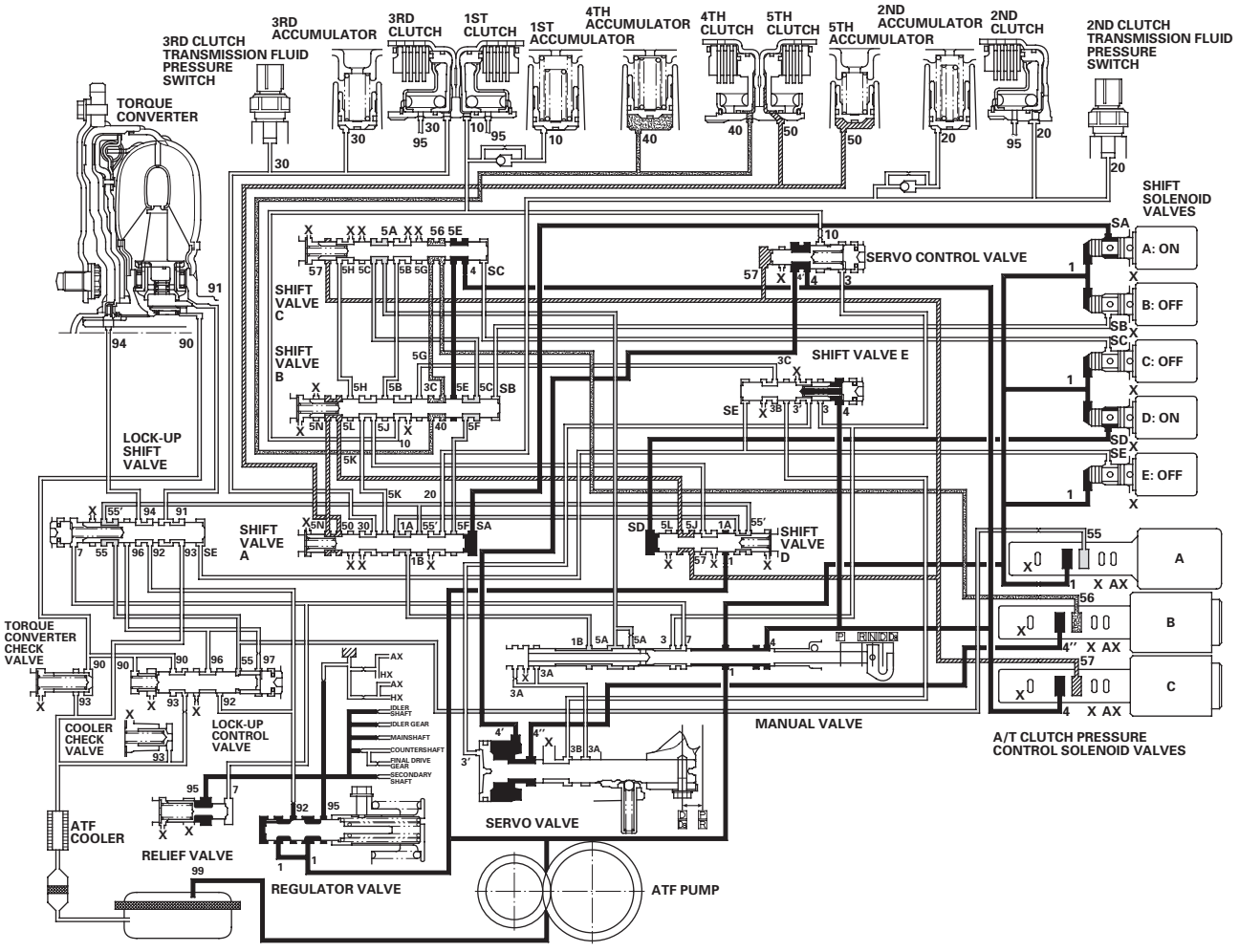

(cont'd)

System Description (cont'd)

Hydraulic Flow (cont'd)

D Position: Driving in 5th gear

The PCM turns shift solenoid valves C ON, and keeps A and D ON, and B and E turned OFF. Shift solenoid valve C pressure (SC) is applied to the right side of the shift valve C. Shift valve C is moved to the left side to switch the A/T clutch pressure control solenoid valve B pressure port leading to the 4th clutch.

The 5th clutch pressure (50) is held to high by the A/T clutch pressure control solenoid valve C, and the 5th clutch is engaged securely.

NOTE: When used, ''left'' or ''right'' indicates direction on the hydraulic circuit.

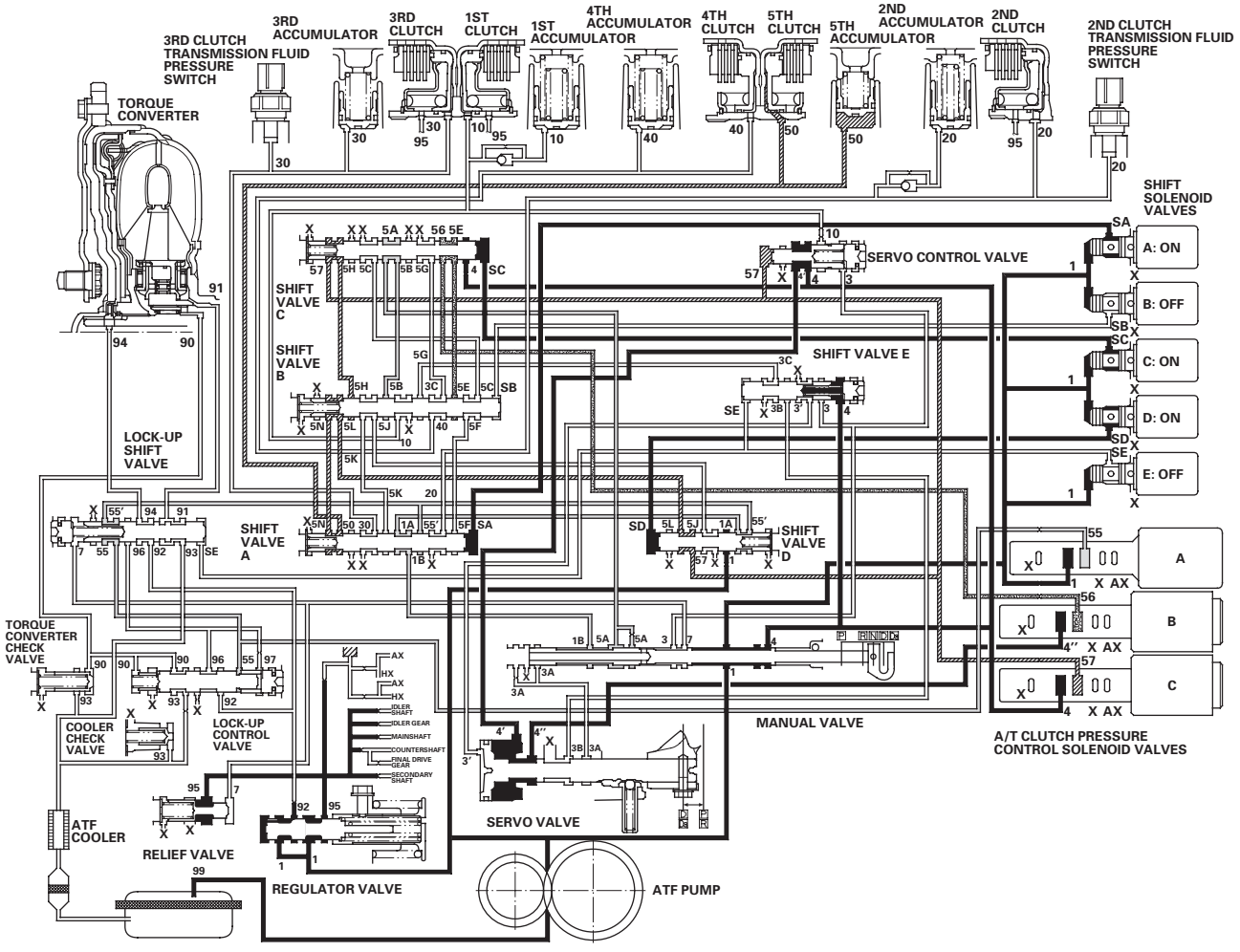

R Position: Shifting to R position from P or N position

When shifting in the R position, the PCM turns shift solenoid valves B and E ON, and A, C, and D OFF. Shift solenoid valve B pressure (SB) is applied to the right side of the shift valve B, and shift valve B is moved to left side. Shift solenoid valve E pressure (SE) is applied to the left side of shift valve E, and shift valve E is moved to the right side. Line pressure (1) changes to (3) at the manual valve, and flows to the servo valve via the shift valve E. The servo valve is moved to reverse range position. Movement of the shift valves B and E, and servo valve creates 4th clutch pressure line between the 4th clutch and the A/T clutch pressure control solenoid valve A. The 4th clutch pressure (40) is applied to the 4th clutch, and the 4th clutch is engaged gently.

NOTE: When used, ''left'' or ''right'' indicates direction on the hydraulic circuit.

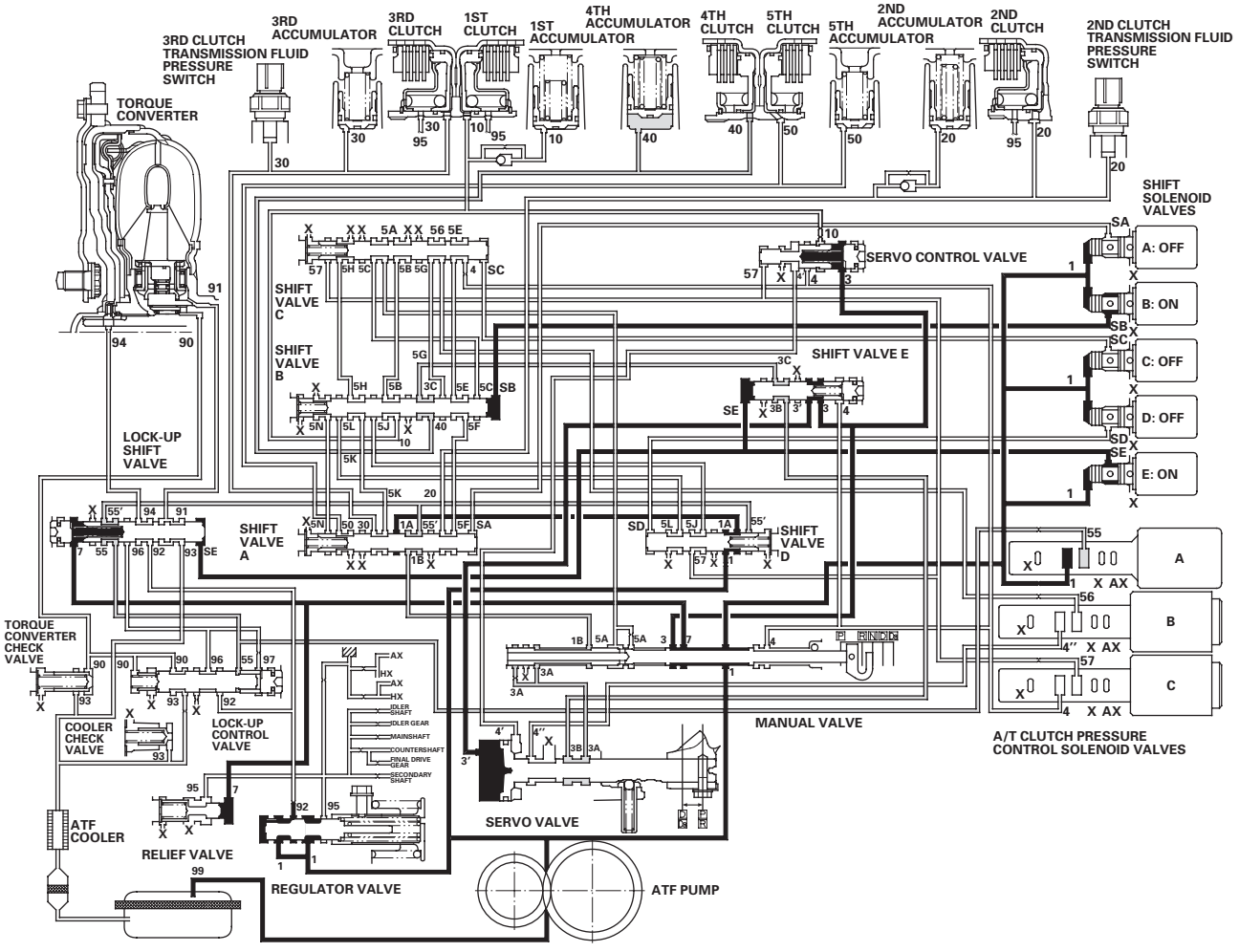

(cont'd)

System Description (cont'd)

Hydraulic Flow (cont'd)

R Position: Driving in reverse gear
After starting off in reverse gear, the PCM turns shift solenoid valves A ON, and keeps B and E ON, and C and D OFF. Shift solenoid valve A pressure (SA) is applied to the right side of shift valve A to cover the A/T clutch pressure control solenoid valve A pressure port, and to uncover the line pressure port leading to the 4th clutch creating full line pressure. The 4th clutch is engaged securely with line pressure.

Reverse Inhibitor Control
While the vehicle is moving forward, the PCM keeps shift solenoid valve E remaining OFF. Shift valve E covers the port of line pressure (3') leading to the servo valve reverse position. The servo valve cannot be shifted to reverse position, and hydraulic pressure is not applied to 4th clutch from servo valve for reverse; as a result, power is not transmitted to the reverse direction.

NOTE: When used, ''left'' or ''right'' indicates direction on the hydraulic circuit.

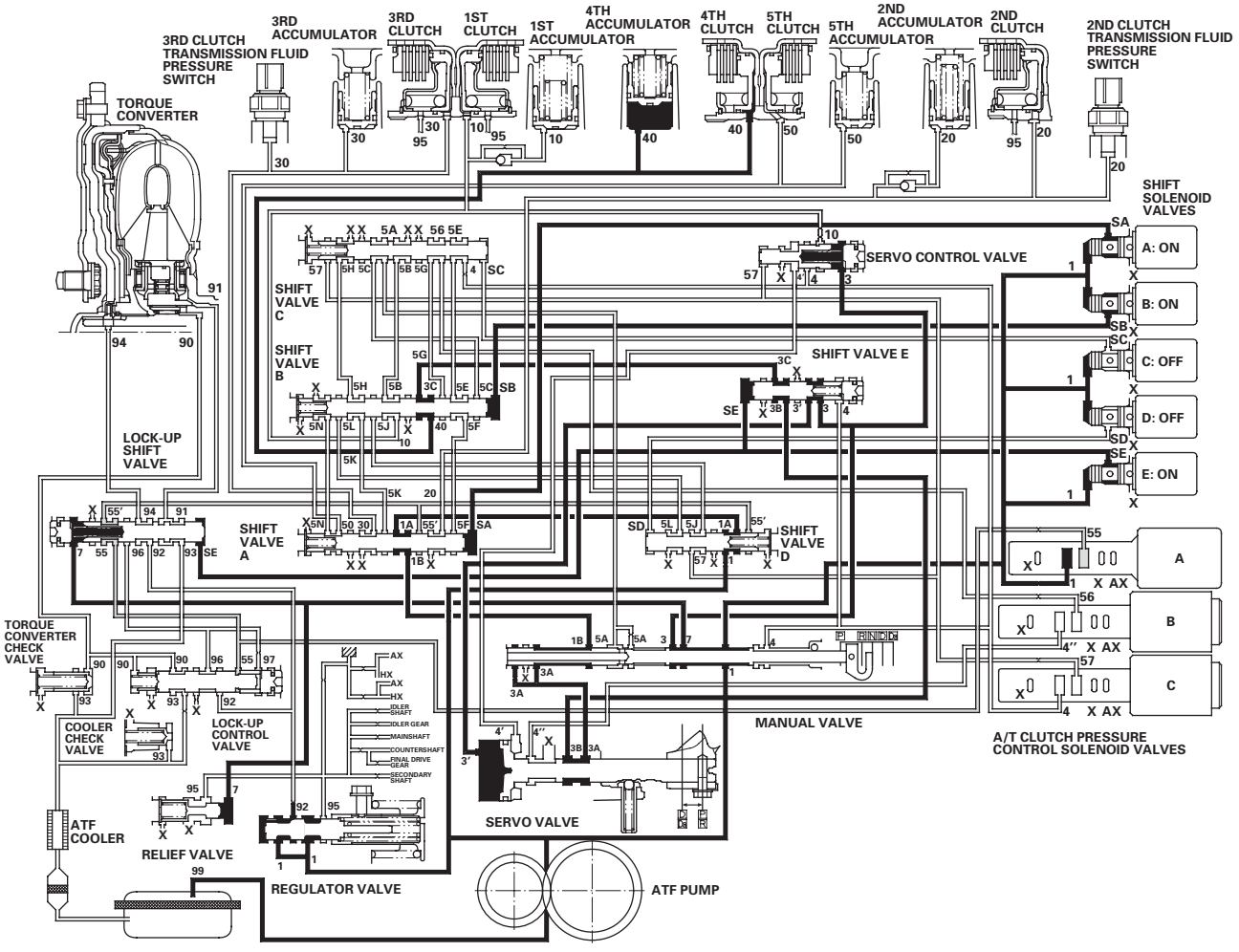

P Position

Shift solenoid valves B and E are turned ON, and A, C, and D are turned OFF by the PCM. Line pressure (1) flows to the shift solenoid valves and A/T clutch pressure control solenoid valve A. Line pressure (3) changes to (3′) at shift valve E, and flows to the servo valve. The servo valve is moved to reverse/park position. Hydraulic pressure is not applied to the clutches.

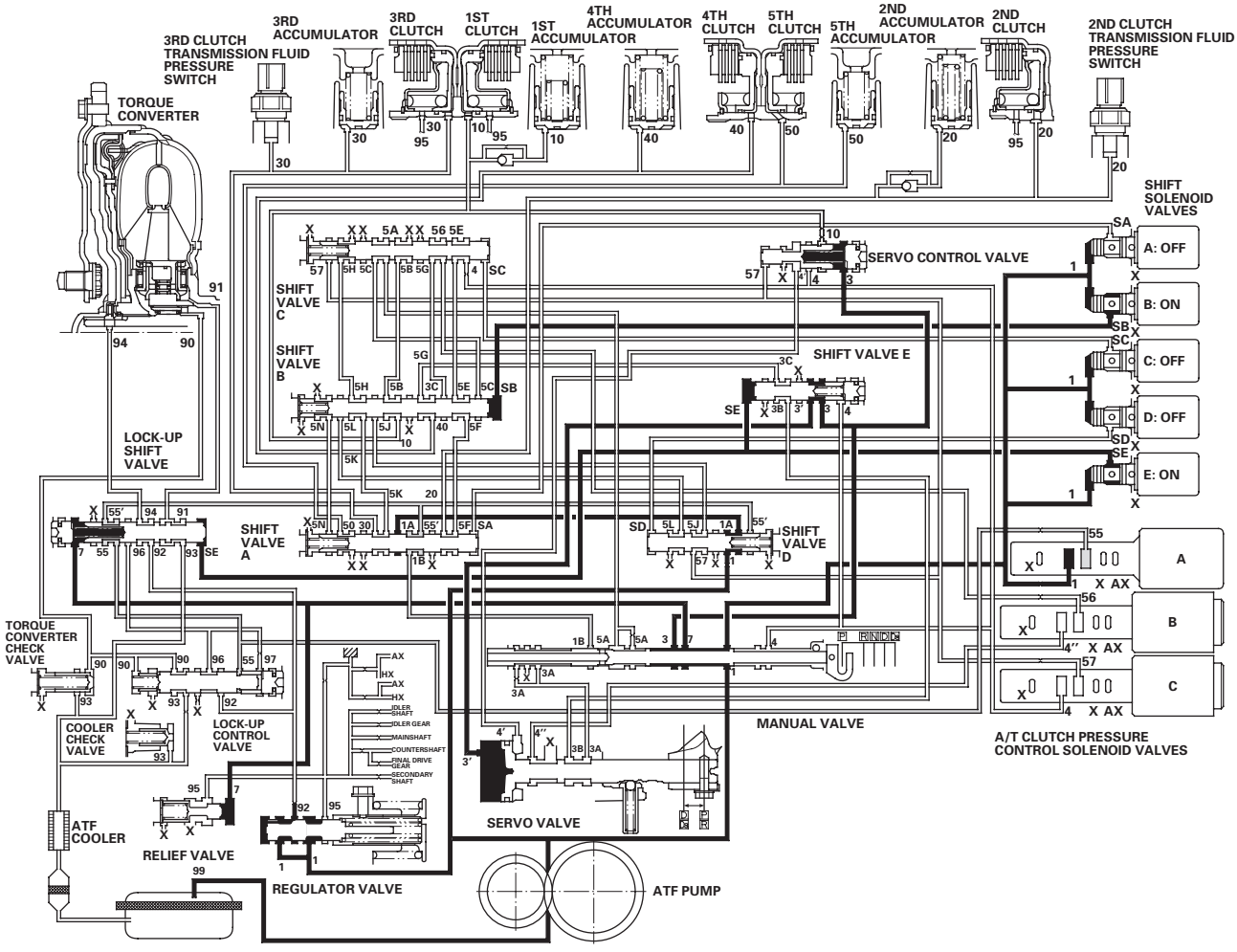

System Description (cont'd)

Lock-up System

The lock-up mechanism of the torque converter clutch operates in D position (2nd, 3rd, 4th, and 5th), and in D3 position (2nd and 3rd), and M (sequential sportshift mode) position (3rd, 4th, and 5th). The pressurized fluid is drained from the back of the torque converter through a fluid passage, causing the torque converter clutch piston to be held against the torque converter cover. As this takes place, the mainshaft rotates at the same speed as the engine crankshaft. Together with the hydraulic control, the PCM optimizes the timing and amount of the lock-up mechanism. When the shift solenoid valve E is turned on by the PCM, shift solenoid valve E pressure switches the lock-up shift valve lock-up on and off. The A/T clutch pressure control solenoid valve A and the lock-up control valve control the amount of the lock-up.

Torque Converter Clutch Lock-up ON (Engaging Torque Converter Clutch)
Fluid in the chamber between the torque converter cover and the torque converter clutch piston is drained off, and fluid entered from the chamber between the pump and stator exerts pressure through the torque converter clutch piston against the torque converter cover. The torque converter clutch piston engages with the torque converter cover; the torque converter clutch lock-up is ON, and the mainshaft rotates at the same speed as the engine.

Power flow

The power flows by way of:

Engine
↓
Drive plate
↓
Torque converter cover
↓
Torque converter clutch piston
↓
Damper spring
↓
Turbine
↓
Mainshaft

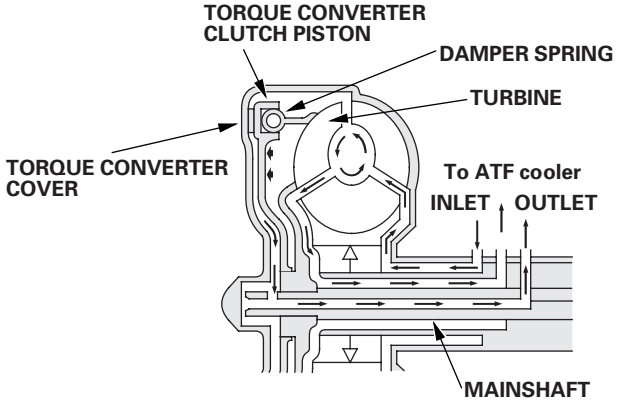

Torque Converter Clutch Lock-up OFF (Disengaging Torque Converter Clutch)
Fluid entering from the chamber between the torque converter cover and the torque converter clutch piston passes through the torque converter and goes out from the chambers between the turbine and the stator, and between the pump and the stator. As a result, the torque converter clutch piston moves away from the torque converter cover, and the torque converter clutch lock-up is released; torque converter clutch lock-up is OFF.

Power flow

The power flows by way of:

Engine
↓
Drive plate
↓
Torque converter cover
↓
Pump
↓
Turbine
↓
Mainshaft

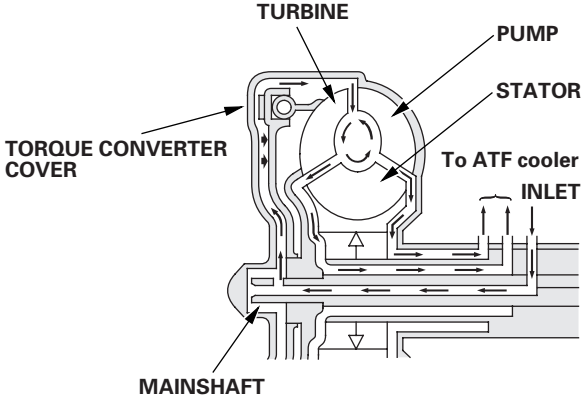

No Lock-up
Shift solenoid valve E is turned OFF by the PCM, and shift solenoid valve E pressure (SE) is not applied to the lock-up shift valve. The lock-up shift valve stays to the right to uncover the torque converter pressure ports leading to the left side of the torque converter and releasing pressure from the right side of the torque converter. Torque converter pressure (92) changes to (94) at the lock-up shift valve, and enters into the left side of the torque converter to disengage the torque converter clutch. This keeps the torque converter clutch piston keeps away from the torque converter cover and the torque converter clutch lock-up is OFF.

NOTE: When used, ''left'' or ''right'' indicates direction on the hydraulic circuit.

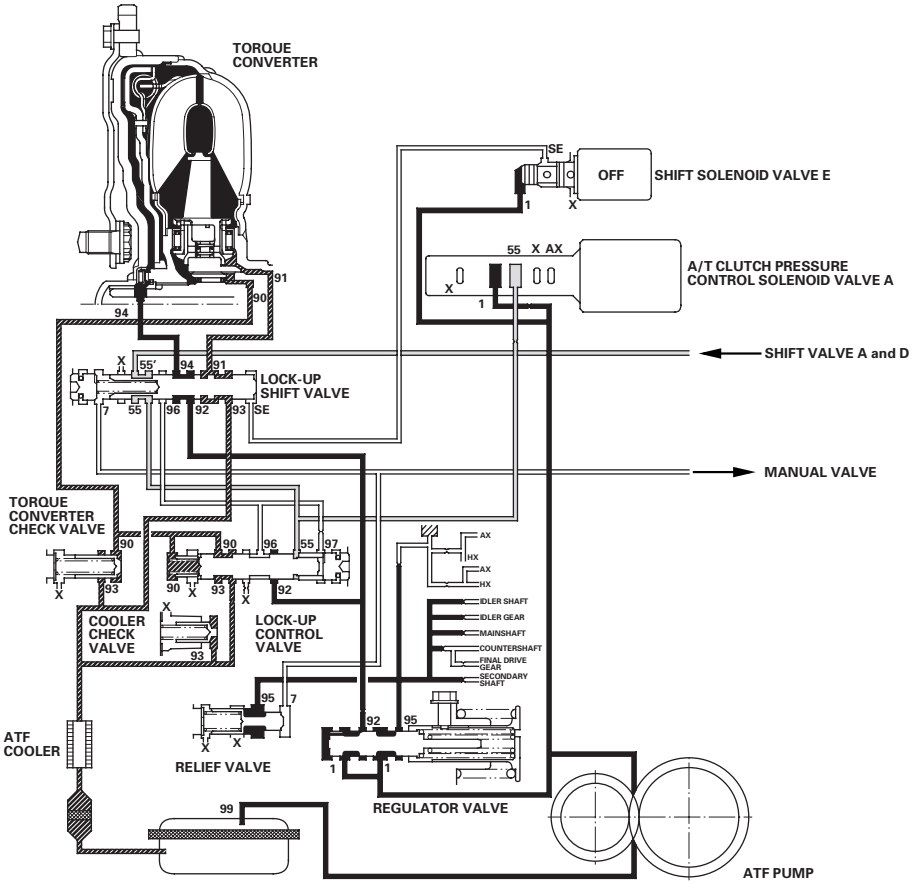

(cont'd)

System Description (cont'd)

Lock-up System (cont'd)

Partial Lock-up

As the speed of the vehicle reaches the prescribed value, shift solenoid valve E is turned ON by the PCM, and shift solenoid valve E pressure (SE) is applied to the right side of the lock-up shift valve. The lock-up shift valve is moved to the left side to switch the torque converter pressure (91) port, which goes to the right side of the torque converter, and the port of torque converter pressure (94) released from the left side of the torque converter. Torque converter pressure (91) flows to the right side of the torque converter to engage the torque converter clutch. The PCM also controls the A/T clutch pressure control solenoid valve A, and A/T clutch pressure control solenoid valve A pressure (55) is applied to the lock-up shift valve and lock-up control valve. The position of the lock-up control valve depends on A/T clutch pressure control solenoid valve A pressure (55) and torque converter pressure released from the torque converter. The lock-up control valve controls the amount of the torque converter clutch lock-up until fluid between the clutch piston and torque converter cover is fully released; the torque converter clutch is in partial lock-up.

NOTE: When used, ''left'' or ''right'' indicates direction on the hydraulic circuit.

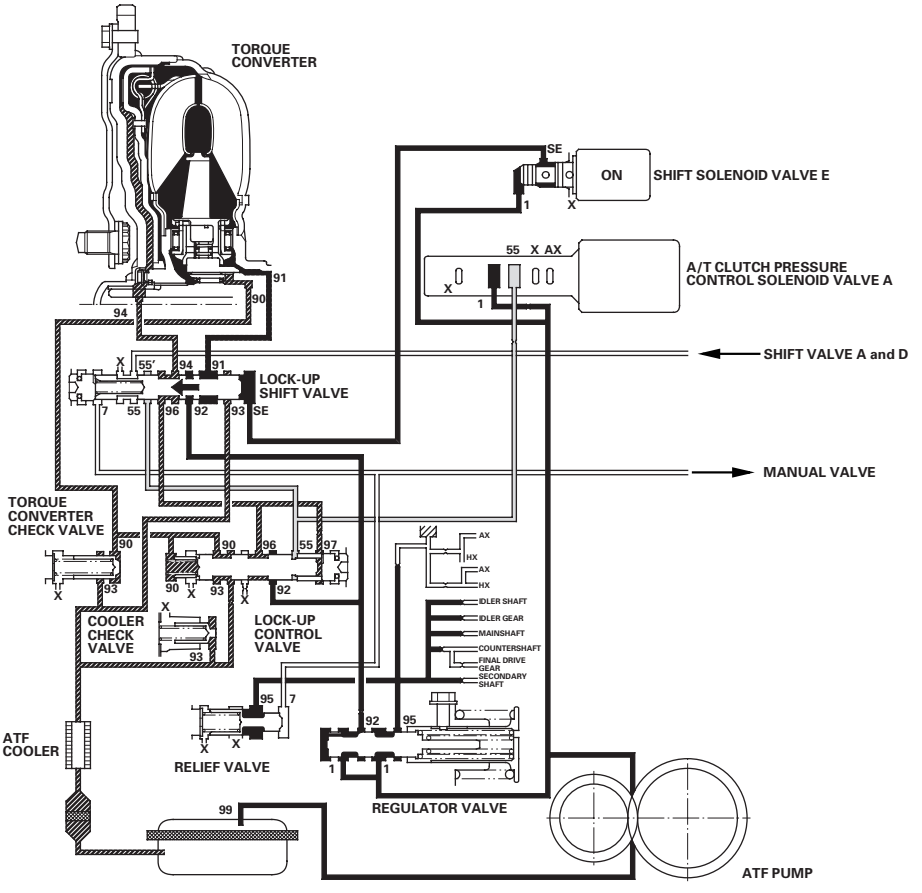

Full Lock-up

When the vehicle speed increases, the PCM sends a signal to A/T clutch pressure control solenoid valve A to increase A/T clutch pressure control solenoid valve A pressure (55), and the lock-up control valve is moved to the left side by the increased pressure. Then converter pressure (94) from the left side of the torque converter is completely released at the lock-up control valve, and torque converter pressure (91) engages the torque converter clutch securely; the torque converter clutch is in full lock-up.

NOTE: When used, ''left'' or ''right'' indicates direction on the hydraulic circuit.

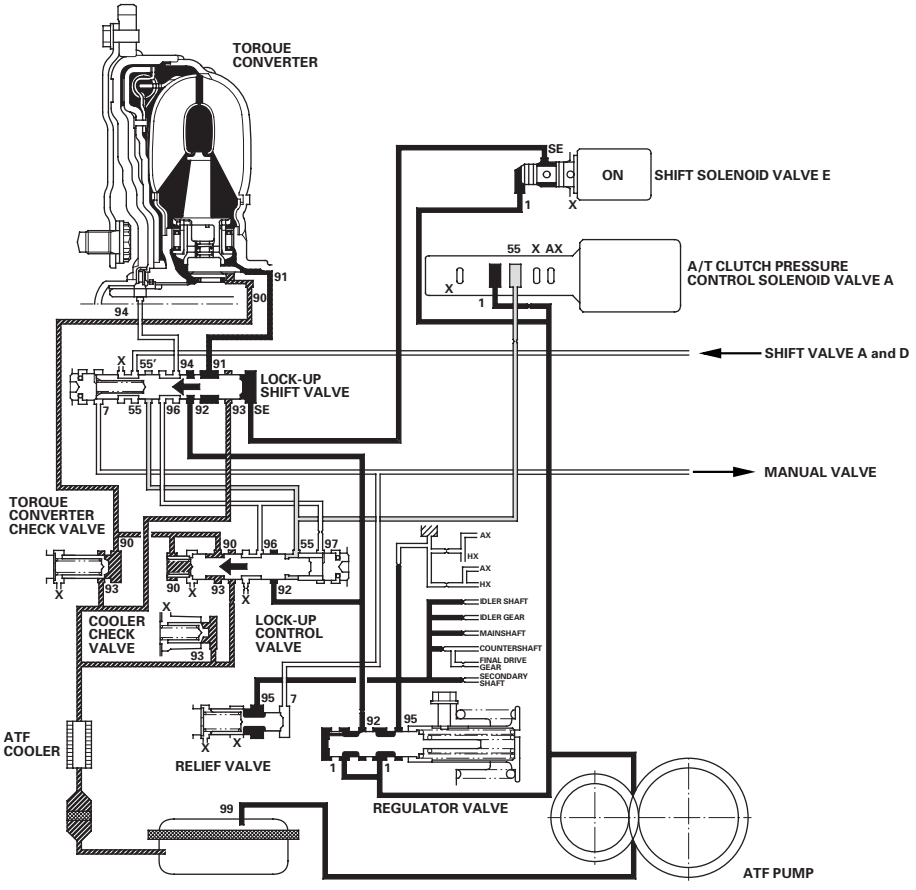

System Description (cont'd)

Shift Lever Mechanism

The shift lever has five positions; the P, R, N, D, and D3 positions. The D position has two modes; automatic shift mode and sequential sportshift mode with the shift lever moved to the M position. The shift lever shifts along with the A/T gear position indicator panel. The shift lever can be shifted out of the P position and into the R position without pressing the shift lever. The shift lock/reverse lock mechanism is an additional shift lever lockout mechanism.
The shift lever is engaged with the shift lever link in the P, R, N, D, and D3 positions. This unit shifts the transmission using the shift cable connected between the shift cable link and the transmission control shaft.

In the M position, the shift lever is disengaged from the shift lever link, and the shift lever can be used to shift gears manually between 1st through 5th, much like a manual transmission.

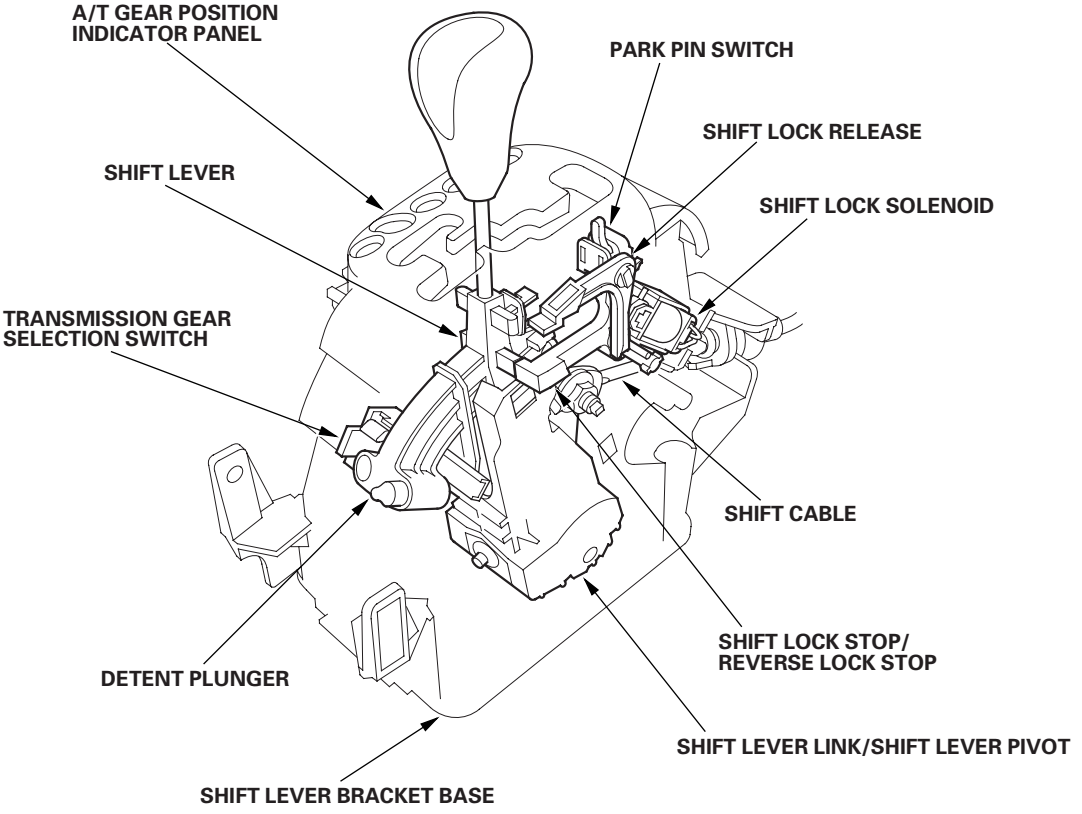

Shift Lever Mechanism in M Position
When the shift lever shifts to the M position, the shift lever is disengaged from the shift lever link/shift lever pivot, and the shift lever link lock pops up to engage with the shift lever bracket base; the shift lever link/shift lever pivot and shifting position in the transmission are held in the D position.

The shift lever link lock is spring loaded, it pops up in the M position, and does not engage the shift lever link/shift lever pivot in any position except M.

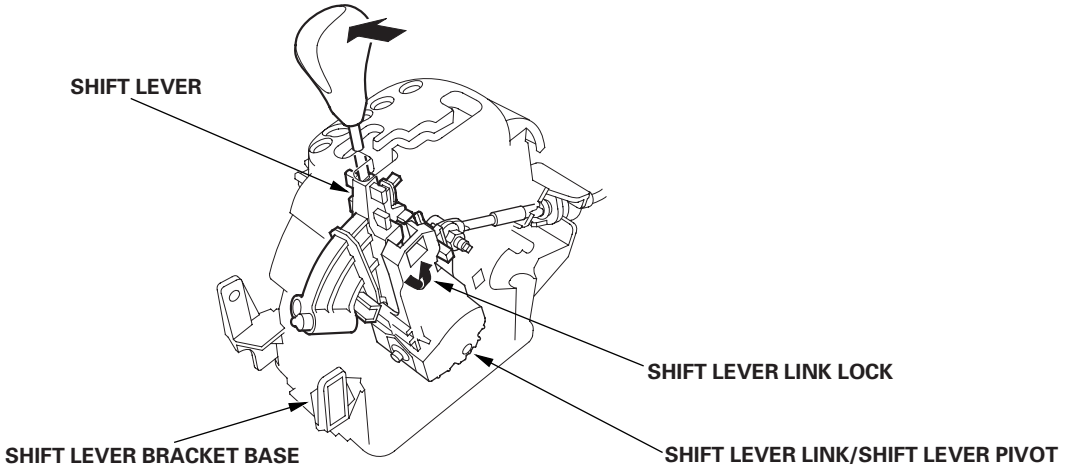

The shift lever fits into the M position by using a detent plunger with a spring. When shifting to upshift and downshift positions, the detent plunger is depressed by the detent bracket inner wall, and the detent plunger spring puts the shift lever back into the neutral position. The detent plunger also works in the P position.

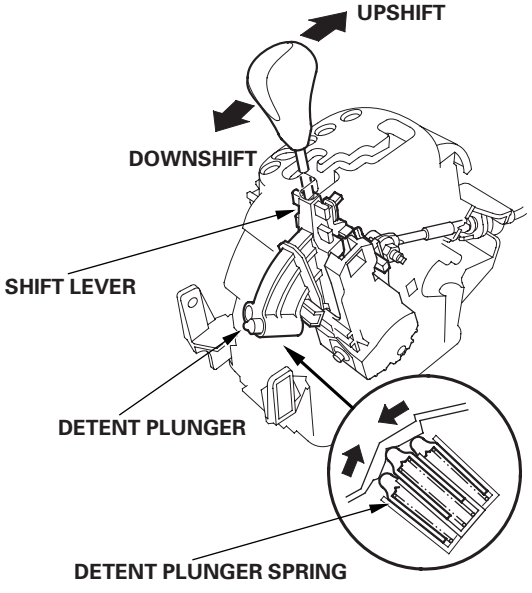

System Description (cont'd)

Shift Lock/Reverse Lock Mechanism

The shift lock system reduces the risk of the starting the engine in gear. Starting the engine is possible only in the P and N positions. The shift lock mechanism consists of the shift lock solenoid, shift lock stop, shift lock release, and related parts. The reverse lock mechanism shares the shift lock mechanism. The shift lock solenoid is electronically controlled by the shift lock/reverse lock control system signals. If the shift lock solenoid does not operate, the shift lock/reverse lock mechanism can be released by pressing the shift lock release.

In the P position while pressing the brake pedal and the throttle is fully closed, the shift lock solenoid is turned ON, and the shift lock solenoid plunger is retracted, releasing the shift lock stop. This allows the shift lever to be moved.

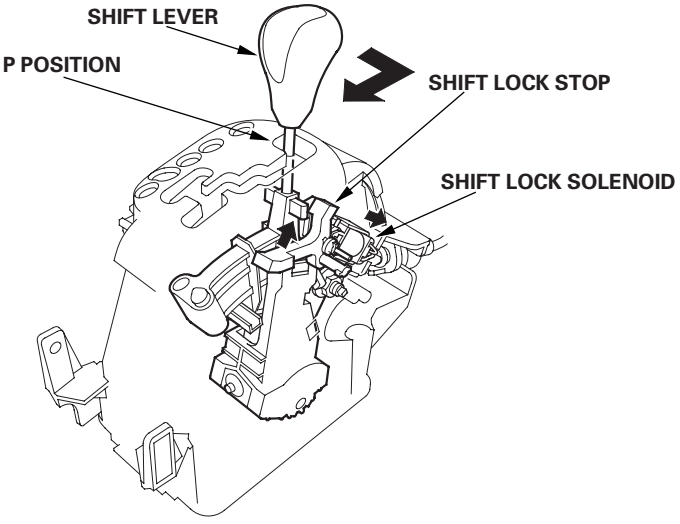

When the brake pedal is released or the accelerator is pressed, the shift lock solenoid stays OFF, and the shift lock stop locks the shift lever in the P position.

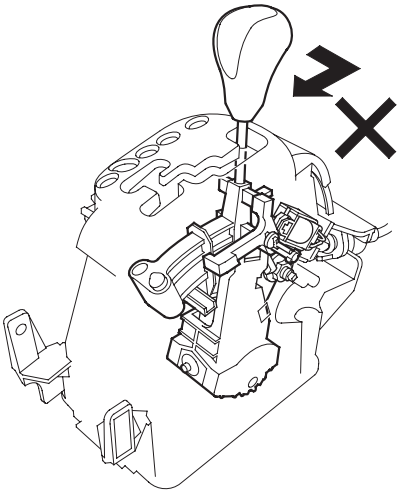

When the shift lever is shifted to the R position from N, the shift lock solenoid is turned ON, and the shift lock solenoid plunger is retracted to release the reverse lock stop. This allows the shift lever to be moved to R position.

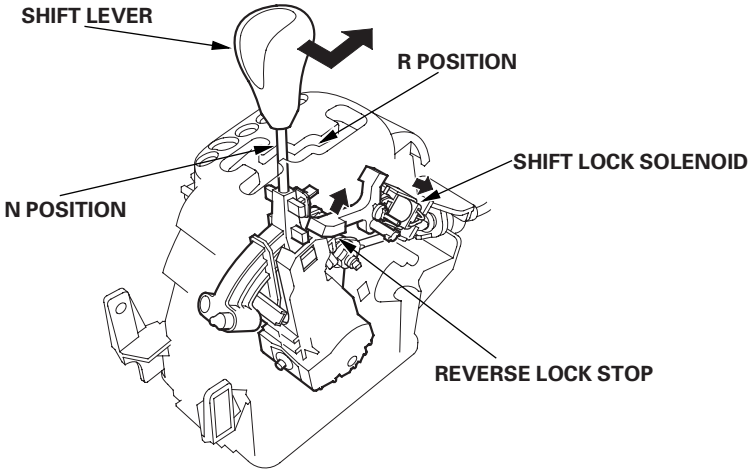

If the conditions (acceleration at 6 mph (10 km/h) or less, and deceleration at 5 mph (8 km/h) or less in the D position) for turning ON the solenoid are not met, the shift lock solenoid stays OFF, and the reverse lock stop locks the shift lever in the N position.

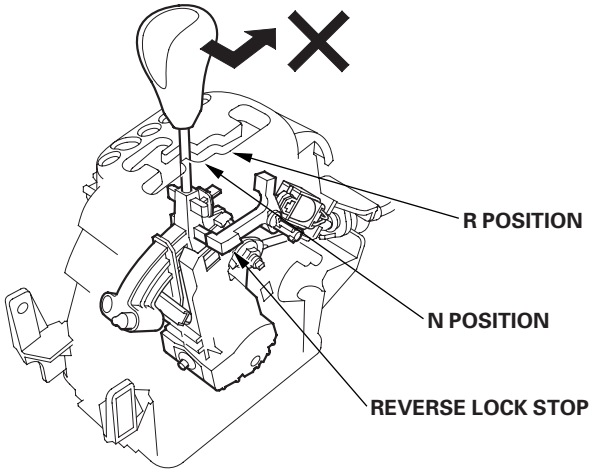

System Description (cont'd)

Circuit Diagram - PCM A/T Control System - 2002-2004 Models

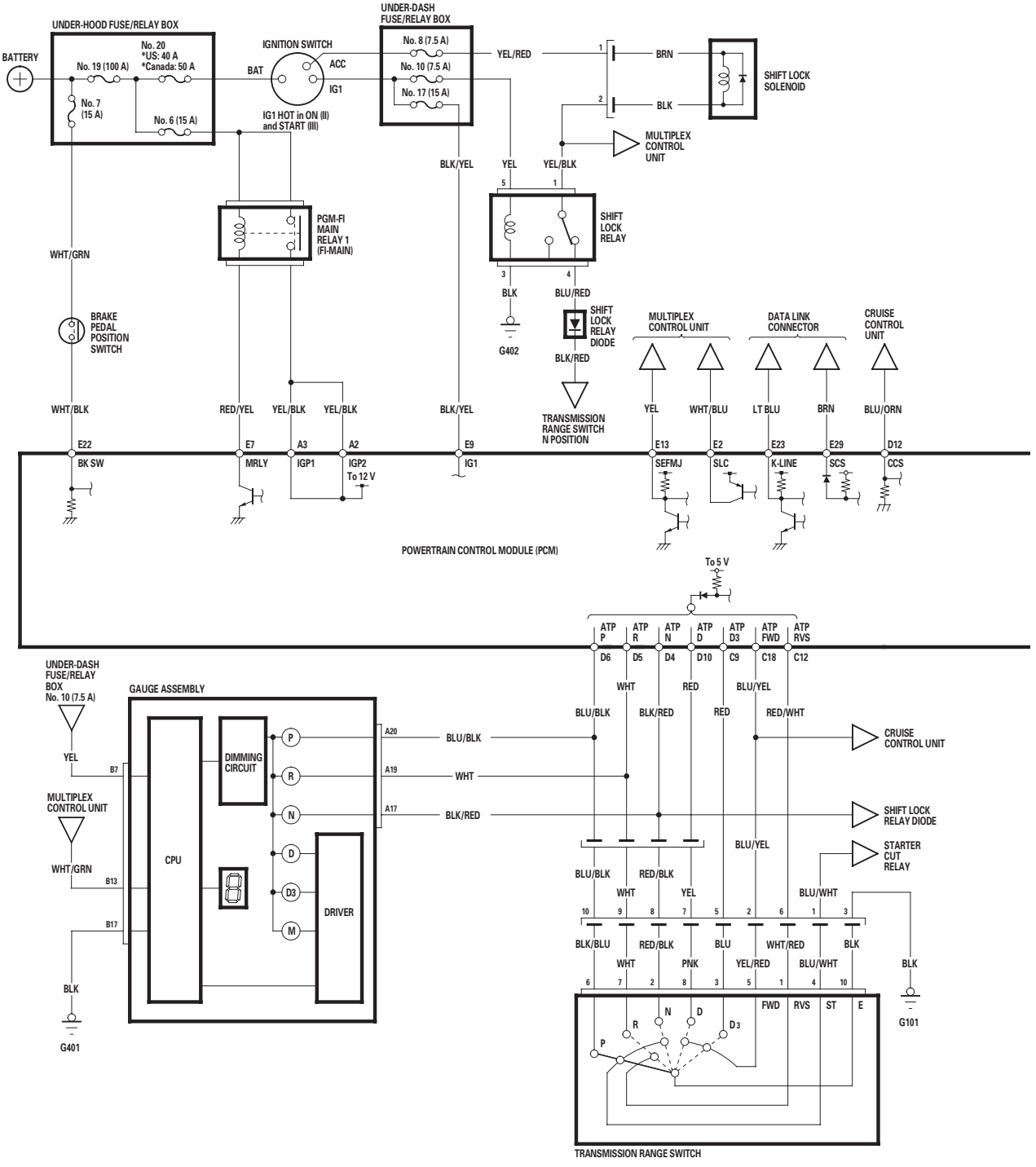

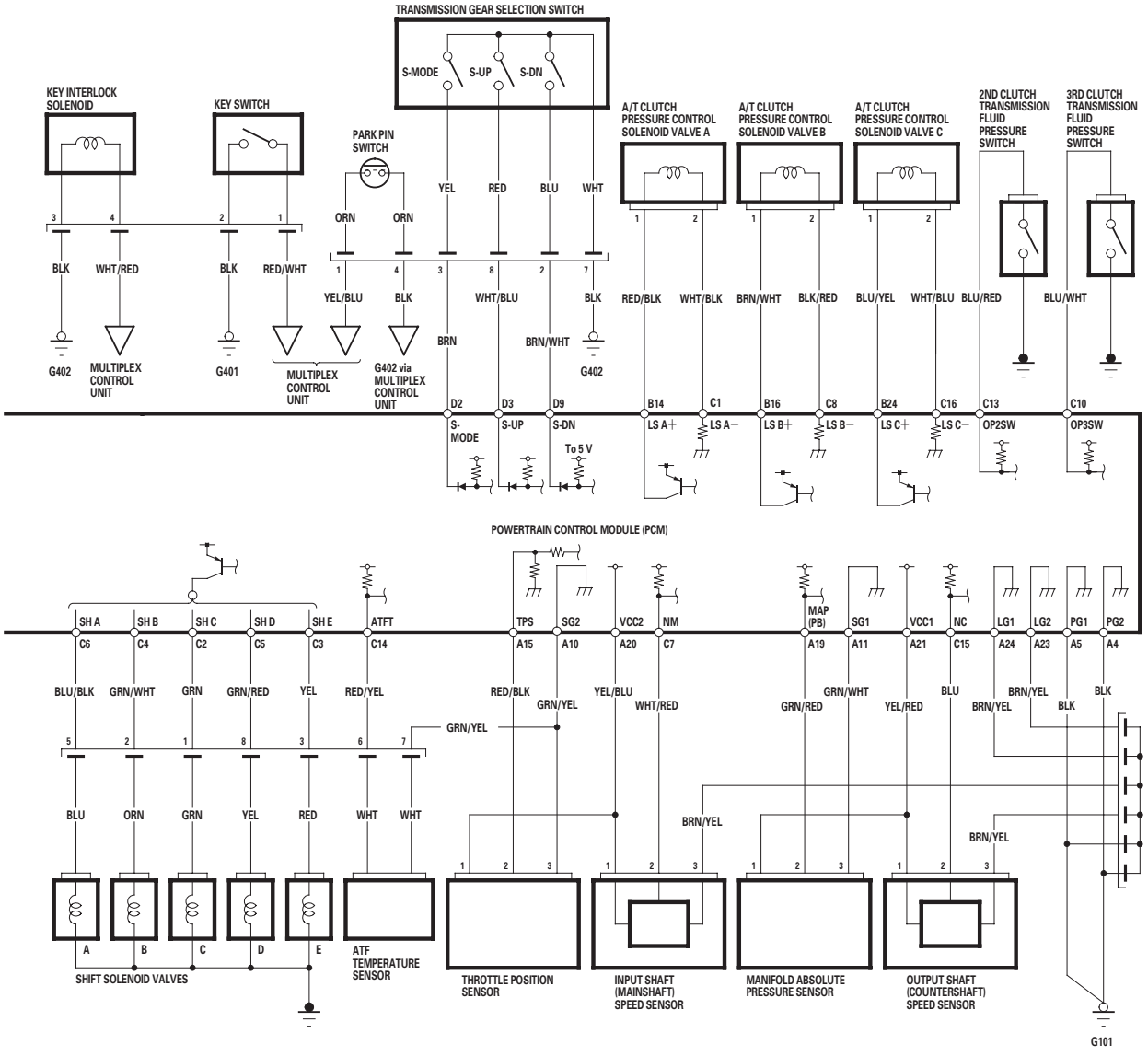

PCM Connector Terminal Locations

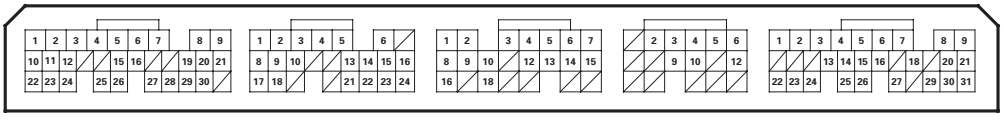

A (31P) B (24P) C (22P) D (17P) E (31P)

System Description (cont'd)

Circuit Diagram - PCM A/T Control System - 2005-2006 Models

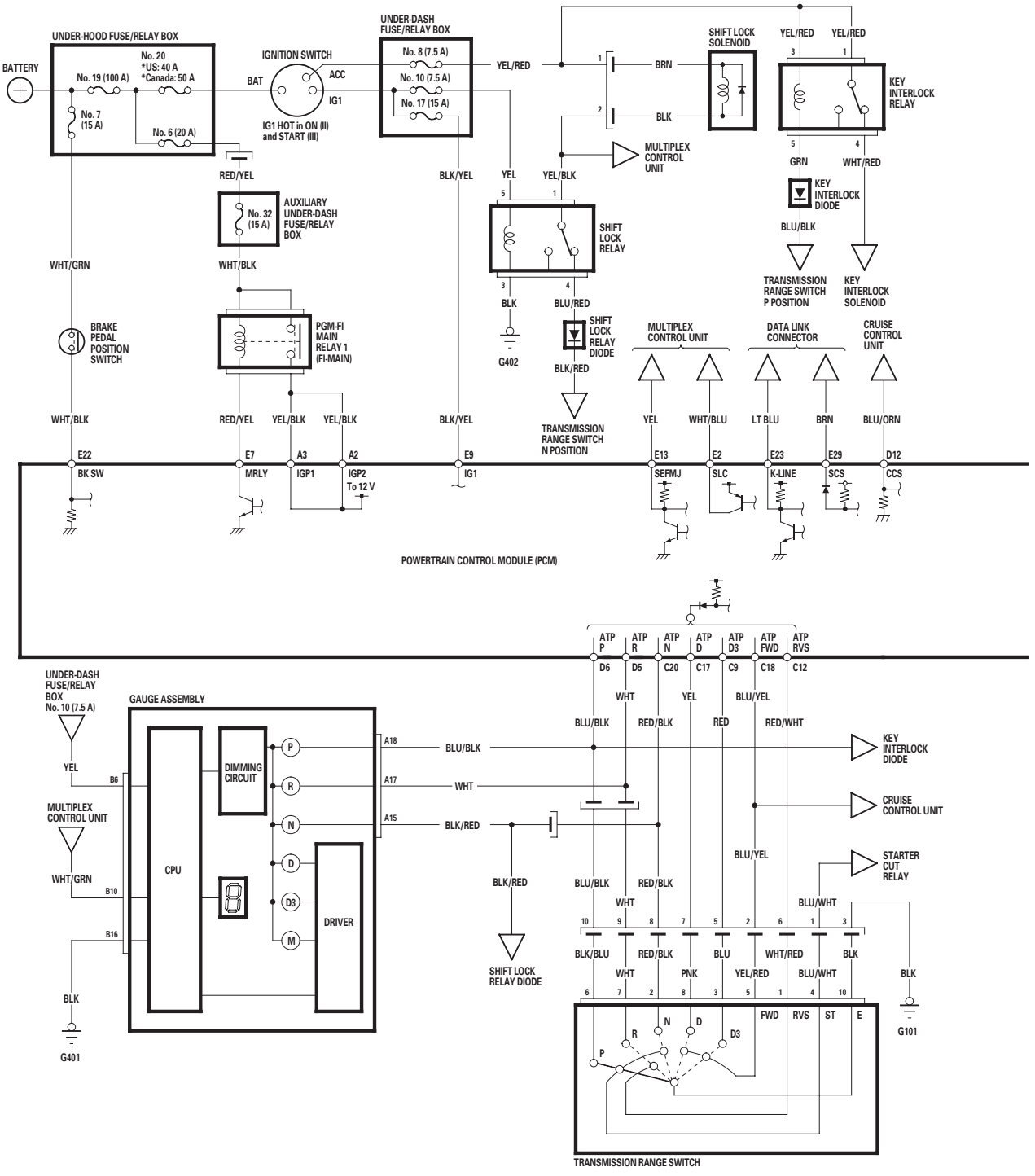

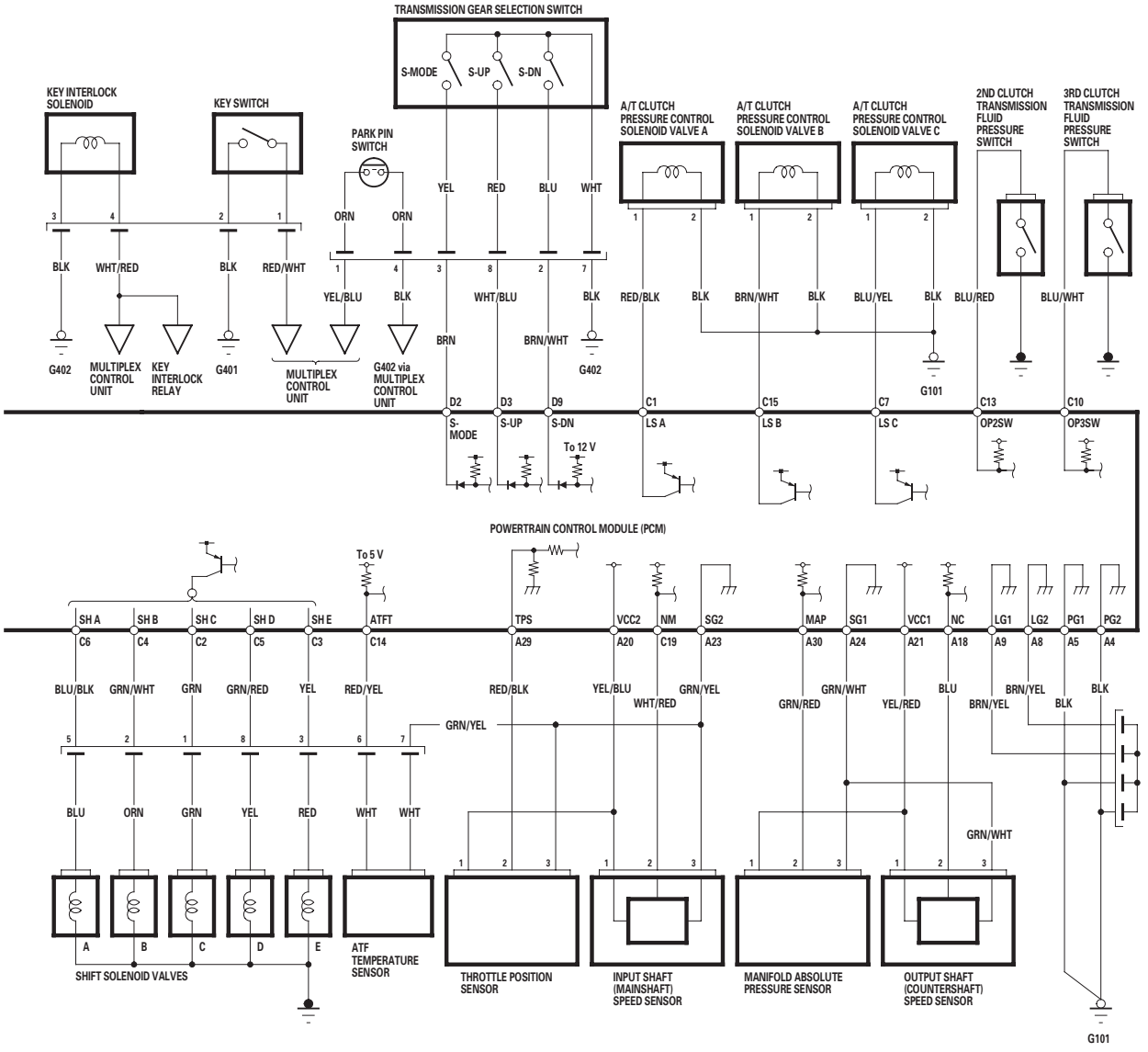

PCM Connector Terminal Location

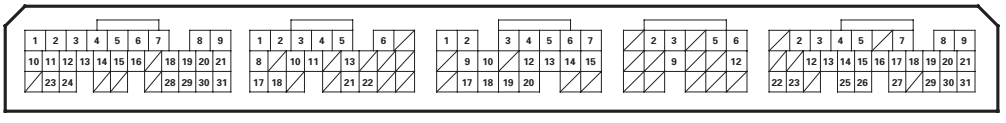

A (31P) B (24P) C (22P) D (17P) E (31P)

DTC Troubleshooting

DTC P0710: Problem in ATF Temperature Sensor Circuit

2002-2004 Models

NOTE:
- Record all freeze data and review General Troubleshooting Information (see page 14-3) before you troubleshoot.
- This code is caused by an electrical circuit problem and cannot be caused by a mechanical problem in the transmission.

1. Turn the ignition switch OFF.
2. Disconnect the shift solenoid harness connector.
3. Turn the ignition switch ON (II).
4. Measure the voltage between shift solenoid harness connector terminal No. 6 and body ground.

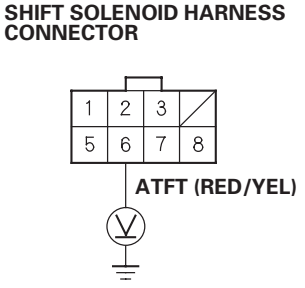

Wire side of female terminals

Is there about 5 V?

YES—Go to step 5.

NO—Go to step 13.

5. Turn the ignition switch OFF.
6. Disconnect PCM connector A (31P).
7. Check for continuity between shift solenoid harness connector terminal No. 7 and PCM connector terminal A10.

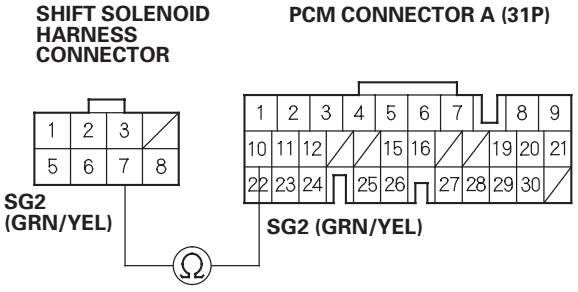

Wire side of female terminals

Is there continuity?

YES—Go to step 8.

NO—Repair open in the wire between PCM connector terminal A10 and the shift solenoid harness connector. ■

8. Connect PCM connector A (31P).
9. Turn the ignition switch ON (II).

10. Measure the voltage between shift solenoid harness connector terminals No. 6 and No. 7.

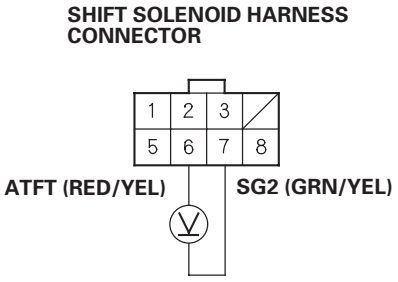

Wire side of female terminals

Is there about 5 V?

YES—Check the ATF temperature sensor and shift solenoid harness in the transmission housing (see page 14-268). ■

NO—Go to step 11.

11. Turn the ignition switch OFF.

12. Check for continuity between shift solenoid harness connector terminal No. 7 and body ground.

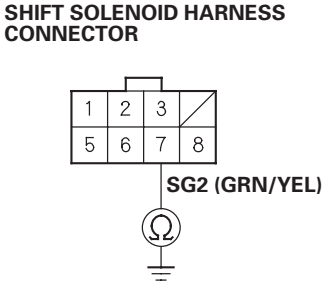

Wire side of female terminals

Is there continuity?

YES—Update the PCM if it does not have the latest software, or substitute a known-good PCM (see page 14-7), then recheck. If the symptom/indication goes away with a known-good PCM, replace the original PCM. ■

NO—Repair open in the wires between PCM connector terminal A23 and ground (G101), between A24 and ground (G101), and repair poor ground (G101).

13. Measure the voltage between PCM connector terminal C14 and body ground.

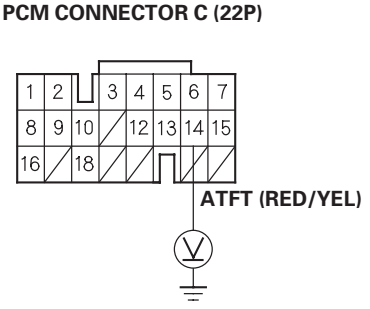

Wire side of female terminals

Is there about 5 V?

YES—Repair open in the wire between PCM connector terminal C14 and the shift solenoid harness connector. ■

NO—Check for a short in the wire between PCM connector terminal C14 and the shift solenoid harness connector. If the wire is OK, update the PCM if it does not have the latest software, or substitute a known-good PCM (see page 14-7), then recheck. If the symptom/indication goes away with a known-good PCM, replace the original PCM. ■

DTC Troubleshooting (cont'd)

DTC P0715: A Problem in Input Shaft (Mainshaft) Speed Sensor Circuit

2002-2004 Models

NOTE: Record all freeze data and review General Troubleshooting Information (see page 14-3) before you troubleshoot.

Code P0715 (15) doesn't always mean there's an electrical problem in the input shaft (mainshaft) or output shaft (countershaft) speed sensor circuit; code P0715 (15) may also indicate a mechanical problem in the transmission. Any problem causing irregular countershaft-to-mainshaft speed difference can cause this code.

1. Turn the ignition switch ON (II).

2. Check whether the scan tool or the HDS indicates a code for the throttle position (TP) sensor.

   Does the scan tool or the HDS indicate a code for the TP sensor?

   YES—Perform the troubleshooting for the TP sensor (see page 11-122). Recheck for code P0715 after troubleshooting. ■

   NO—Go to step 3.

3. Turn the ignition switch OFF.

4. Disconnect PCM connector A (31P).

5. Check for continuity between PCM connector terminals A23 and body ground, and between A24 and body ground.

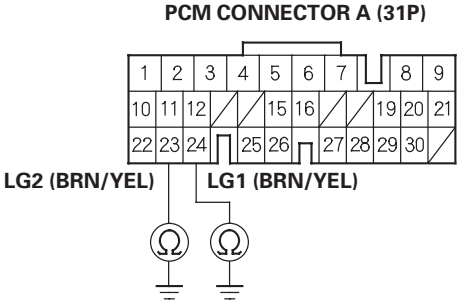

Wire side of female terminals

   Is there continuity?

   YES—Go to step 6.

   NO—Repair open in the wires between PCM connector terminals A23 and ground (G101), between A24 and ground (G101), and repair poor ground (G101). ■

6. Connect PCM connector A (31P).

7. Disconnect the input shaft (mainshaft) speed sensor connector.

8. Turn the ignition switch ON (II).

9. Measure the voltage between input shaft (mainshaft) speed sensor connector terminal No. 1 and body ground.

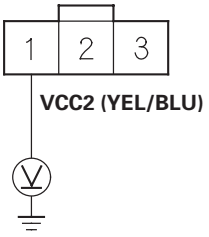

Wire side of female terminals

Is there about 5 V?

YES—Go to step 10.

NO—Go to step 19.

10. Turn the ignition switch OFF.

11. Check for continuity between input shaft (mainshaft) speed sensor connector terminal No. 2 and body ground.

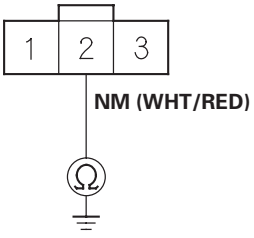

Wire side of female terminals

Is there continuity?

YES—Repair short to ground in the wire between PCM connector terminal C7 and input shaft (mainshaft) speed sensor connector. ■

NO—Go to step 12.

12. Check for continuity between input shaft (mainshaft) speed sensor connector terminal No. 3 and body ground.

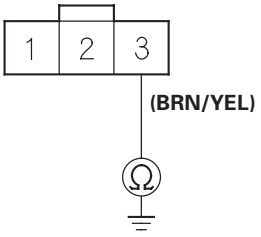

Wire side of female terminals

Is there continuity?

YES—Go to step 13.

NO—Repair open in the wire between the input shaft (mainshaft) speed sensor connector and ground (G101). ■

13. Turn the ignition switch ON (II).

14. Measure the voltage between input shaft (mainshaft) speed sensor connector terminals No. 2 and No. 3.

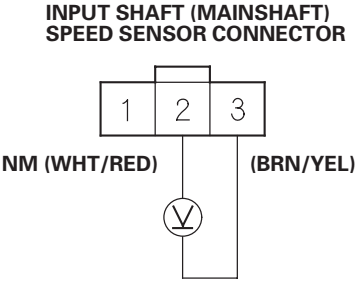

Wire side of female terminals

Is there about 5 V?

YES—Go to step 15.

NO—Go to step 23.

(cont'd)

DTC Troubleshooting (cont'd)

15. Connect the input shaft (mainshaft) speed sensor connector.

16. Measure the voltage between PCM connector terminals C7 and A24.

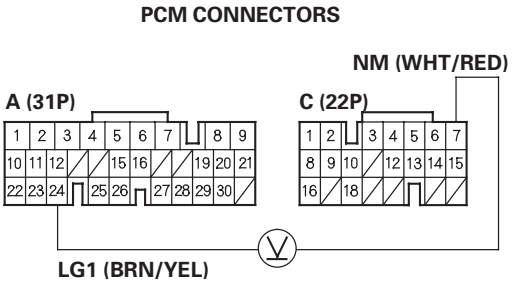

Wire side of female terminals

Is the voltage 0 V or about 5 V?

YES—Go to step 17.

NO—Replace the input shaft (mainshaft) speed sensor. ■

17. Shift to the P position. Start the engine, and let it idle.

18. With engine idling, measure the voltage between PCM connector terminals C7 and A24.

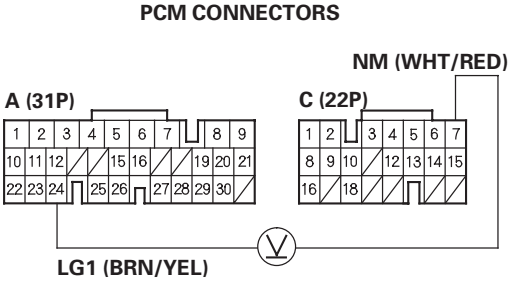

Wire side of female terminals

Is there 1.5—3.5 V?

YES—Update the PCM if it does not have the latest software or substitute a known-good PCM (see page 14-7), then recheck. If the symptom/indication goes away with a known-good PCM, replace the original PCM. ■

NO—Replace the input shaft (mainshaft) speed sensor. ■

19. Measure the voltage between PCM connector terminal A20 and A24.

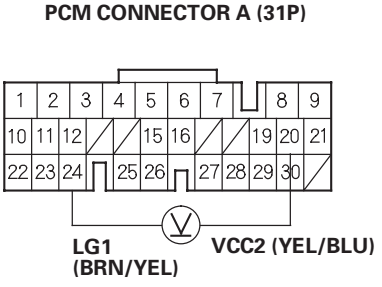

Wire side of female terminals

Is there about 5 V?

YES—Repair open in the wire between PCM connector terminal A20 and the input shaft (mainshaft) speed sensor connector. ■

NO—Go to step 20.

20. Turn the ignition switch OFF.

21. Disconnect PCM connector A (31P).

22. Check for continuity between PCM connector terminal A20 and body ground.

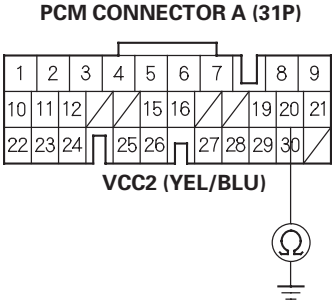

Wire side of female terminals

Is there continuity?

YES—Repair short to ground in the wire between PCM connector terminal A20 and the input shaft (mainshaft) speed sensor connector. ■

NOTE: A short to ground on this circuit will damage the PCM.

NO—Update the PCM if it does not have the latest software or substitute a known-good PCM (see page 14-7), then recheck. If the symptom/indication goes away with a known-good PCM, replace the original PCM. ■

23. Measure the voltage between PCM connector terminals C7 and A24.

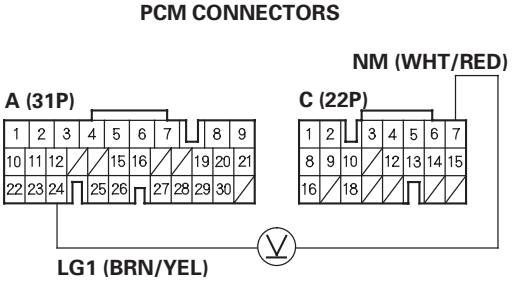

Wire side of female terminals

Is there about 5 V?

YES—Repair open in the wire between PCM connector terminal C7 and the input shaft (mainshaft) speed sensor connector. ■

NO—Update the PCM if it does not have the latest software or substitute a known-good PCM (see page 14-7), then recheck. If the symptom/indication goes away with a known-good PCM, replace the original PCM. ■

DTC Troubleshooting (cont'd)

DTC P0720: Problem in Output Shaft (Countershaft) Speed Sensor Circuit

2002-2004 Models

NOTE: Record all freeze data and review General Troubleshooting Information (see page 14-3) before you troubleshoot.

1. Turn the ignition switch ON (II).

2. Check whether the scan tool or the HDS indicates a code for the manifold absolute pressure (MAP) sensor.

   Does the scan tool or the HDS indicate a code for the MAP sensor?

   YES—Perform the troubleshooting for the indicated MAP sensor (see page 11-98). Recheck for code P0720 after troubleshooting. ■

   NO—Go to step 3.

3. Turn the ignition switch OFF.

4. Disconnect PCM connector A (31P).

5. Check for continuity between PCM connector terminals A23 and body ground, and between A24 and body ground.

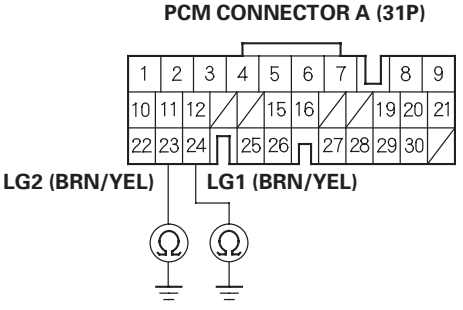

Wire side of female terminals

   Is there continuity?

   YES—Go to step 6.

   NO—Repair open in the wires between PCM connector terminals A23 and ground (G101), between A24 and ground (G101), and repair poor ground (G101). ■

6. Connect PCM connector A (31P).

7. Disconnect the output shaft (countershaft) speed sensor connector.

8. Turn the ignition switch ON (II).

9. Measure the voltage between output shaft (countershaft) speed sensor connector terminal and body ground.

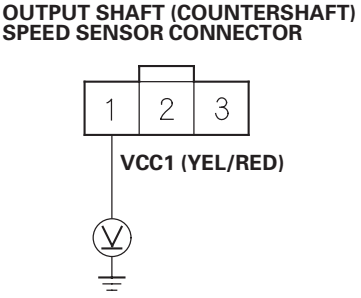

Wire side of female terminals

   Is there about 5 V?

   YES—Go to step 10.

   NO—Go to step 20.

10. Turn the ignition switch OFF.

11. Check for continuity between output shaft (countershaft) speed sensor connector terminal No. 2 and body ground.

OUTPUT SHAFT (COUNTERSHAFT) SPEED SENSOR CONNECTOR

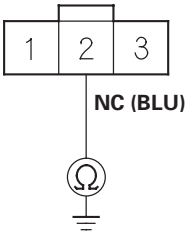

Wire side of female terminals

Is there continuity?

YES—Repair short to ground in the wire between PCM connector terminal C15 and the output shaft (countershaft) speed sensor connector. ■

NO—Go to step 12.

12. Check for continuity between output shaft (countershaft) speed sensor connector terminal No. 3 and body ground.

OUTPUT SHAFT (COUNTERSHAFT) SPEED SENSOR CONNECTOR

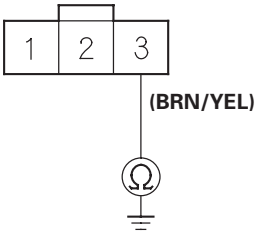

Wire side of female terminals

Is there continuity?

YES—Go to step 13.

NO—Repair open in the wire between the output shaft (countershaft) speed sensor connector and ground (G101). ■

13. Turn the ignition switch ON (II).

14. Measure the voltage between output shaft (countershaft) speed sensor connector terminal No. 2 and No. 3.

OUTPUT SHAFT (COUNTERSHAFT) SPEED SENSOR CONNECTOR

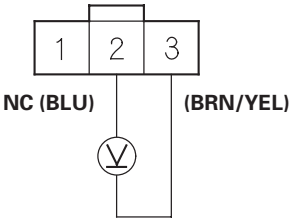

Wire side of female terminals

Is there about 5 V?

YES—Go to step 15.

NO—Go to step 24.

15. Connect the output shaft (countershaft) speed sensor connector.

16. Measure the voltage between PCM connector terminals C15 and A24.

PCM CONNECTORS

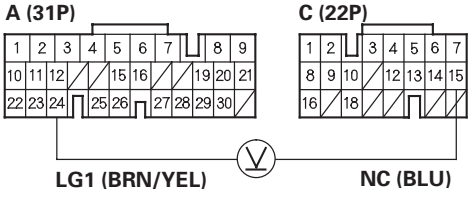

Wire side of female terminals

Is the voltage 0 V or about 5 V?

YES—Go to step 17.

NO—Replace the output shaft (countershaft) speed sensor. ■

(cont'd)

DTC Troubleshooting (cont'd)

17. Raise the front of the vehicle, make sure it is securely supported, and allow the front wheels to rotate freely.

18. Start the engine, then shift to the D position and let the wheels rotate.

19. Measure the voltage between PCM connector terminals C15 and A24.

PCM CONNECTORS

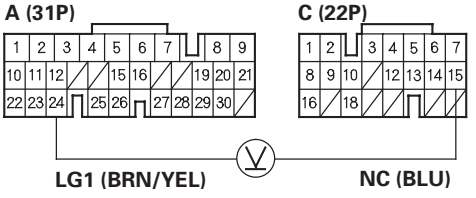

Wire side of female terminals

Is there 1.5—3.5 V?

YES—Update the PCM if it does not have the latest software, or substitute a known-good PCM (see page 14-7), then recheck. If the symptom/indication goes away with a known-good PCM, replace the original PCM. ■

NO—Replace the output shaft (countershaft) speed sensor. ■

20. Measure the voltage between PCM connector terminals A21 and A24.

PCM CONNECTOR A (31P)

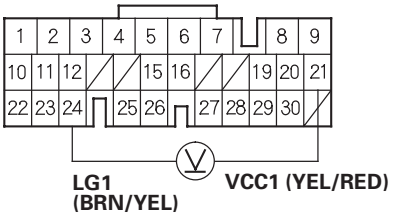

Wire side of female terminals

Is there about 5 V?

YES—Repair open in the wire between PCM connector terminal A21 and the output shaft (countershaft) speed sensor connector. ■

NO—Go to step 21.

21. Turn the ignition switch OFF.

22. Disconnect PCM connector A (31P).

23. Check for continuity between PCM connector terminal A21 and body ground.

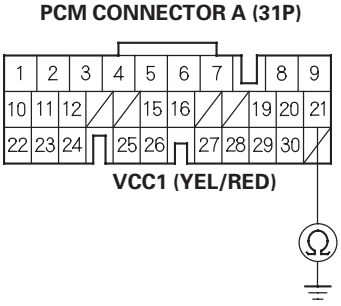

Wire side of female terminals

Is there continuity?

YES—Repair short to ground in the wire between PCM connector terminal A21 and the output shaft (countershaft) speed sensor connector. ■

NOTE: A short to ground on this circuit damages the PCM.

NO—Update the PCM if it does not have the latest software, or substitute a known-good PCM (see page 14-7), then recheck. If the symptom/indication goes away with a known-good PCM, replace the original PCM. ■

24. Measure the voltage between PCM connector terminals C15 and A24.

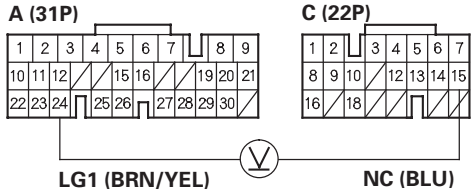

Wire side of female terminals

Is there about 5 V?

YES—Repair open in the wire between PCM connector terminal C15 and the output shaft (countershaft) speed sensor connector. ■

NO—Update the PCM if it does not have the latest software, or substitute a known-good PCM (see page 14-7), then recheck. If the symptom/indication goes away with a known-good PCM, replace the original PCM. ■

DTC Troubleshooting (cont'd)

DTC P0730: Problem in Shift Control System

2002-2004 Models

NOTE:
- Record all freeze data and review General Troubleshooting Information (see page 14-3) before you troubleshoot.
- Keep replacement solenoid valves on hand;
  – A/T clutch pressure control solenoid valves B and C
  – Shift solenoid valves A, B, C, D, and E

1. Check whether the scan tool or the HDS indicates another code.

   Does the scan tool or the HDS indicate another code?

   YES—Perform the troubleshooting for the indicated code(s). Recheck for code P0730 after troubleshooting.■

   NO—Go to step 2.

   NOTE: Do not continue with this troubleshooting until the causes of any other DTCs have been corrected.

2. Drain the ATF (see page 14-272) through a strainer. Inspect the strainer for metal debris or excessive clutch material.

   Does the strainer contain metal debris or excessive clutch material?

   YES—Replace the transmission.■

   NO—Replace the ATF (see page 14-272), then go to step 3.

3. Measure the 1st, 2nd, 3rd, 4th, and 5th clutch pressure (see page 14-254).

   Is each clutch pressure within the service limit?

   YES—Go to step 4.

   NO—Repair the hydraulic system as necessary or replace the transmission.■

4. Replace the shift solenoid valves A, B, C, D, and E (see page 14-260).

5. Replace the A/T clutch pressure control solenoid valves B and C (see page 14-265).

6. Reset the PCM memory by removing the No. 6 ECU (15 A) fuse in the under-hood fuse/relay box for more than 10 seconds (see page 14-6).

7. Using the scan tool or the HDS, check to be sure that the engine coolant temperature is 176 ℉ (80 ℃) or above. If the coolant temperature is low, warm up the engine to normal operating temperature (the radiator fan comes on).

8. Drive the vehicle at speeds over 12 mph (20 km/h) in 1st, 2nd, 3rd, 4th, and 5th gears in D position for more than 30 seconds.

9. Recheck for code P0730.

   Does the scan tool or the HDS indicate code P0730?

   YES—Replace the transmission.■

   NO—The system is OK at this time.■

DTC P0740: Problem in Lock-up Control System

2002-2004 Models

NOTE:
- Record all freeze data and review General Troubleshooting Information (see page 14-3) before you troubleshoot.
- Keep replacement solenoid valves on hand;
  – A/T clutch pressure control solenoid valves A
  – Shift solenoid valves E

1. Check whether the scan tool or the HDS indicates another code.

   Does the scan tool or the HDS indicate another code?

   YES—Perform the troubleshooting for the indicated code(s). Recheck for code P0740 after troubleshooting. ■

   NO—Go to step 2.

   NOTE: Do not continue with this troubleshooting until the causes of any other DTCs have been corrected.

2. Drain the ATF (see page 14-272) through a strainer. Inspect the strainer for metal debris or excessive clutch material.

   Does the strainer contain metal debris or excessive clutch material?

   YES—Replace the transmission. ■

   NO—Replace the ATF (see page 14-272), then go to step 3.

3. Measure the line pressure (see page 14-254).

   Is the line pressure within the service limit?

   YES—Go to step 4.

   NO—Repair the hydraulic system as necessary or replace the transmission. ■

4. Replace the shift solenoid valve E (see page 14-260).

5. Replace the A/T clutch pressure control solenoid valve A (see page 14-263).

6. Reset the PCM memory by removing the No. 6 (15 A) ECU fuse in the under-hood fuse/relay box for more than 10 seconds (see page 14-6).

7. Using the scan tool or the HDS, check to be sure that the engine coolant temperature is 176 °F (80 °C) or above. If the coolant temperature is low, warm up the engine to normal operating temperature (the radiator fan comes on).

8. Drive the vehicle at the freeze data speed or at 55 mph (88 km/h) in 5th gear for more than 1 minute.

9. Recheck for code P0740.

   Does the scan tool or the HDS indicate code P0740?

   YES—Replace the transmission and torque converter. ■

   NO—The system is OK at this time. ■

DTC Troubleshooting (cont'd)

DTC P0745: Problem in Hydraulic Control System of A/T Clutch Pressure Control Solenoid Valve A Circuit

2002-2004 Models

NOTE: Record all freeze data and review General Troubleshooting Information (see page 14-3) before you troubleshoot.

1. Check whether the scan tool or the HDS indicates another code.

   Does the scan tool or the HDS indicate another code?

   YES—Perform the troubleshooting for the indicated code(s). Turn the ignition switch OFF, and go to step 4 after troubleshooting.

   NO—Go to step 2.

2. Drain the ATF (see page 14-272) through a strainer. Inspect the strainer for metal debris or excessive clutch material.

   Does the strainer contain metal debris or excessive clutch material?

   YES—Replace the transmission. ■

   NO—Replace the ATF (see page 14-272), then go to step 3.

3. Turn the ignition switch OFF.

4. Replace the A/T clutch pressure control solenoid valve A (see page 14-263).

5. Reset the PCM memory by removing the No. 6 ECU (15 A) fuse in the under-hood fuse/relay box for more than 10 seconds (see page 14-6).

6. Start the engine, and shift to M position. Start the vehicle off in 1st, drive at 19 mph (30 km/h) for 10 seconds, shift to 2nd gear, drive at 19 mph (30 km/h) for 10 seconds, then decelerate to a stop.

7. Repeat step 6 to test-drive the vehicle.

8. Recheck for DTC P0745.

   Does the scan tool or the HDS indicate code P0745?

   YES—Replace the transmission assembly. ■

   NO—The problem has been corrected. ■

DTC P0748: Problem in A/T Clutch Pressure Control Solenoid Valve A Circuit

2002-2004 Models

NOTE:
- Record all freeze data and review General Troubleshooting Information (see page 14-3) before you troubleshoot.
- This code is caused by an electrical circuit problem and cannot be caused by a mechanical problem in the transmission.

1. Disconnect the A/T clutch pressure control solenoid valve A connector.

2. Measure A/T clutch pressure control solenoid valve A resistance at the solenoid valve connector terminals.

A/T CLUTCH PRESSURE CONTROL SOLENOID VALVE A CONNECTOR

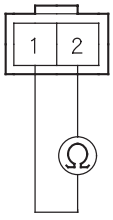

Terminal side of male terminals

Is there 3— 10 Ω ?

YES—Go to step 3.

NO—Replace the A/T clutch pressure control solenoid valve A. ■

3. Disconnect PCM connectors B (24P) and C (22P).

4. Check for continuity between PCM connector terminals B14 and body ground, and between C1 and body ground.

PCM CONNECTORS

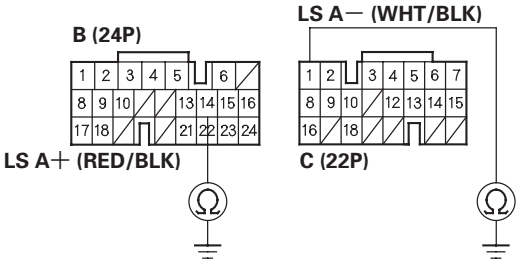

Wire side of female terminals

Is there continuity?

YES—Repair short to ground in the wires between PCM connector terminals B14 and the A/T clutch pressure control solenoid valve A, and between C1 and the A/T clutch pressure control solenoid valve A. ■

NO—Go to step 5.

(cont'd)

DTC Troubleshooting (cont'd)

5. Connect the A/T clutch pressure control solenoid valve A connector.

6. Measure the resistance between the PCM connector terminals B14 and C1.

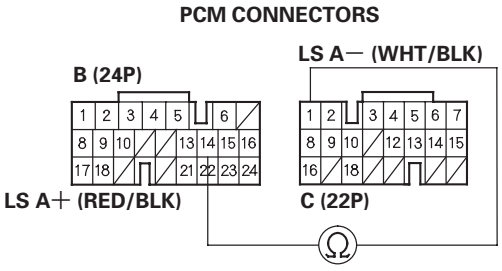

Wire side of female terminals

Is there 3− 10 Ω ?

YES—Go to step 7.

NO—Repair loose terminal or open in the wires between PCM connector terminals B14 and the A/T clutch pressure control solenoid valve A, and between C1 and the A/T clutch pressure control solenoid valve A. ■

7. Disconnect PCM connector A (31P).

8. Check for continuity between PCM connector terminals A23 and body ground, and between A24 and body ground.

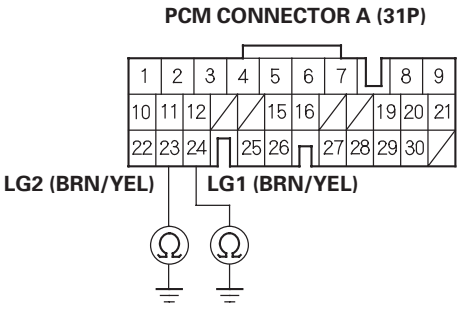

Wire side of female terminals

Is there continuity?

YES—Update the PCM if it does not have the latest software, or substitute a known-good PCM (see page 14-7), then recheck. If the symptom/indication goes away with a known-good PCM, replace the original PCM. ■

NO—Repair open in the wires between PCM connector terminals A23 and ground (G101), and between A24 and ground (G101), and repair poor ground (G101). ■

DTC P0750: Problem in Hydraulic Control System of Shift Solenoid Valve A Circuit

2002-2004 Models

NOTE: Record all freeze data and review General Troubleshooting Information (see page 14-3) before you troubleshoot.

1. Warm up the engine to normal operating temperature (the radiator fan comes on).

2. Check to be sure that the transmission is filled to the proper level, and check for fluid leaks.

3. Drain the ATF (see page 14-272) through a strainer. Inspect the strainer for metal debris or excessive clutch material.

   Does the strainer contain metal debris or excessive clutch material?

   YES—Replace the transmission. ■

   NO—Replace the ATF (see page 14-272), then go to step 4.

4. Reset the PCM memory by removing the No. 6 ECU (15 A) fuse in the under-hood fuse/relay box for more than 10 seconds (see page 14-6).

5. Start the engine, and shift to the M position. Start the vehicle off in 1st, drive at 25 mph (40 km/h) for 10 seconds, shift to 2nd gear, drive at 25 mph (40 km/h) for 10 seconds, then downshift to 1st gear, and drive at 25 mph (40 km/h) for 10 seconds.

6. Recheck for DTC P0750.

   Does the scan tool or the HDS indicate code P0750?

   YES—Go to step 7.

   NO—The problem has been corrected. ■

7. Check whether the scan tool or the HDS indicates another code.

   Does the scan tool or the HDS indicate another code?

   YES—Perform the troubleshooting for the indicated code(s). Turn the ignition switch OFF, and go to step 10 after troubleshooting.

   NO—Go to step 8.

8. Turn the ignition switch OFF.

9. Replace the shift solenoid valve A (see page 14-260).

10. Reset the PCM memory by removing the No. 6 ECU (15 A) fuse in the under-hood fuse/relay box for more than 10 seconds (see page 14-6).

11. Start the engine, and shift to M position. Start the vehicle off in 1st, drive at 25 mph (40 km/h) for 10 seconds, shift to 2nd gear, drive at 25 mph (40 km/h) for 10 seconds, then downshift to 1st gear, and drive at 25 mph (40 km/h) for 10 seconds.

12. Recheck for DTC P0750.

    Does the scan tool or the HDS indicate code P0750?

    YES—Go to step 13.

    NO—The problem has been corrected. ■

13. Check for warranty coverage.

    Is the vehicle under warranty?

    YES—Replace the transmission assembly. ■

    NO—Go to step 14 or replace the transmission assembly.

14. Turn the ignition switch OFF.

(cont'd)

DTC Troubleshooting (cont'd)

15. Remove the transmission, and overhaul transmission hydraulic control system and the 2nd clutch line.

16. Install the transmission on the vehicle.

17. Reset the PCM memory by removing the No. 6 ECU (15 A) fuse in the under-hood fuse/relay box for more than 10 seconds (see page 14-6), if necessary.

18. Start the engine, and shift to the M position. Start the vehicle off in 1st, drive at 25 mph (40 km/h) for 10 seconds, shift to 2nd gear, drive at 25 mph (40 km/h) for 10 seconds, then downshift to 1st gear, and drive at 25 mph (40 km/h) for 10 seconds.

19. Recheck for DTC P0750.

    Does the scan tool or the HDS indicate code P0750?

    YES—Replace the transmission assembly. ■

    NO—The problem has been corrected. ■

DTC P0753: Problem in Shift Solenoid Valve A Circuit

2002-2004 Models

NOTE:
- Record all freeze data and review General Troubleshooting Information (see page 14-3) before you troubleshoot.
- This code is caused by an electrical circuit problem and cannot be caused by a mechanical problem in the transmission.

1. Turn the ignition switch OFF.

2. Disconnect PCM connectors A (31P) and C (22P).

3. Turn the ignition switch ON (II).

4. Measure the voltage between PCM connector terminals C6 and A24.

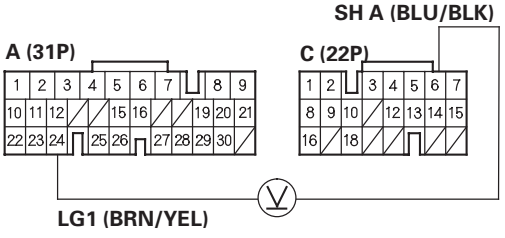

Wire side of female terminals

Is there voltage?

YES—Repair short to power in the wire between PCM connector terminal C6 and the shift solenoid valve A.■

NO—Go to step 5.

5. Turn the ignition switch OFF.

6. Disconnect the shift solenoid harness connector at the transmission housing.

7. Check for continuity between PCM connector terminals C6 and A24.

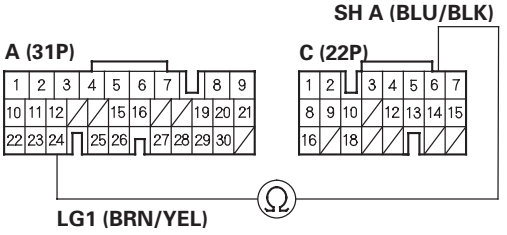

Wire side of female terminals

Is there continuity?

YES—Repair short to ground in the wire between PCM connector terminal C6 and the shift solenoid harness.■

NO—Go to step 8.

8. Connect the shift solenoid harness connector.

9. Measure the resistance between PCM connector terminals C6 and A24.

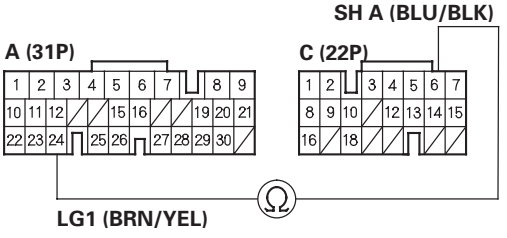

Wire side of female terminals

Is there 12—25 Ω ?

YES—Update the PCM if it does not have the latest software, or substitute a known-good PCM (see page 14-7), then recheck. If the symptom/indication goes away with a known-good PCM, replace the original PCM.■

NO—Go to step 10.

(cont'd)

DTC Troubleshooting (cont'd)

10. Disconnect the shift solenoid harness connector.

11. Check for continuity between PCM connector terminal C6 and shift solenoid harness connector terminal No. 5.

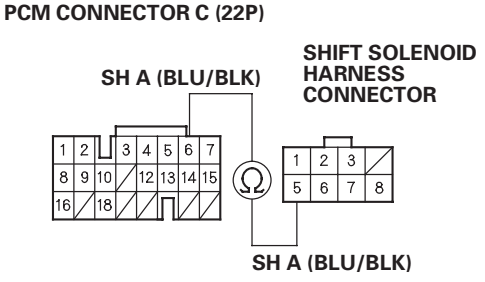

Wire side of female terminals

Is there continuity?

YES—Check the shift solenoid valve A, and check for an open in the shift solenoid harness in the transmission (see page 14-258). ■

NO—Repair open in the wire between PCM connector terminal C6 and the shift solenoid harness. ■

DTC P0758: Problem in Shift Solenoid Valve B Circuit

2002-2004 Models

NOTE:
- Record all freeze data and review General Troubleshooting Information (see page 14-3) before you troubleshoot.
- This code is caused by an electrical circuit problem and cannot be caused by a mechanical problem in the transmission.

1. Turn the ignition switch OFF.

2. Disconnect PCM connectors A (31P) and C (22P).

3. Turn the ignition switch ON (II).

4. Measure the voltage between PCM connector terminals C4 and A24.

PCM CONNECTORS

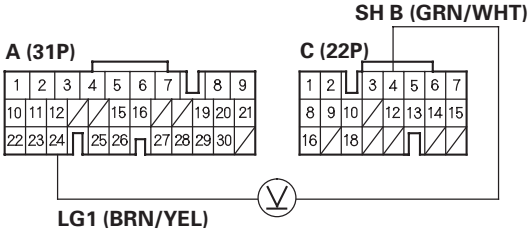

Wire side of female terminals

Is there voltage?

YES—Repair short to power in the wire between PCM connector terminal C4 and the shift solenoid valve B.■

NO—Go to step 5.

5. Turn the ignition switch OFF.

6. Disconnect the shift solenoid harness connector at the transmission housing.

7. Check for continuity between PCM connector terminals C4 and A24.

PCM CONNECTORS

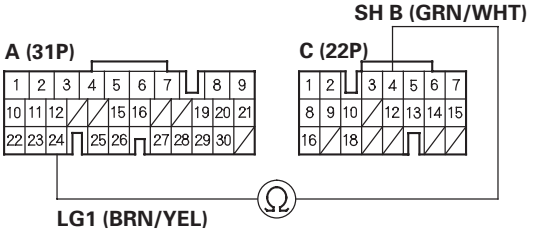

Wire side of female terminals

Is there continuity?

YES—Repair short to ground in the wire between PCM connector terminal C4 and the shift solenoid harness.■

NO—Go to step 8.

8. Connect the shift solenoid harness connector.

9. Measure the resistance between PCM connector terminals C4 and A24.

PCM CONNECTORS

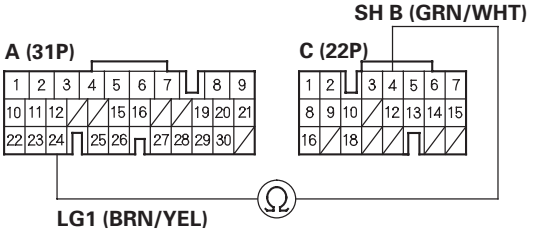

Wire side of female terminals

Is there 12—25 Ω ?

YES—Update the PCM if it does not have the latest software, or substitute a known-good PCM (see page 14-7), then recheck. If the symptom/indication goes away with a known-good PCM, replace the original PCM.■

NO—Go to step 10.

(cont'd)

DTC Troubleshooting (cont'd)

10. Disconnect the shift solenoid harness connector.

11. Check for continuity between PCM connector terminal C4 and shift solenoid harness connector terminal No. 2.

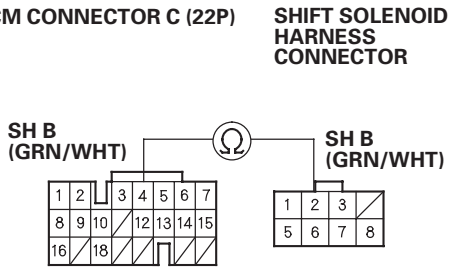

Wire side of female terminals

Is there continuity?

YES—Check shift solenoid valve B, and check for an open in the shift solenoid harness in the transmission (see page 14-258). ■

NO—Repair open in the wire between PCM connector terminal C4 and the shift solenoid harness. ■

DTC P0763: Problem in Shift Solenoid Valve C Circuit

2002-2004 Models

NOTE:
- Record all freeze data and review General Troubleshooting Information (see page 14-3) before you troubleshoot.
- This code is caused by an electrical circuit problem and cannot be caused by a mechanical problem in the transmission.

1. Turn the ignition switch OFF.

2. Disconnect PCM connectors A (31P) and C (22P).

3. Turn the ignition switch ON (II).

4. Measure the voltage between PCM connector terminals C2 and A24.

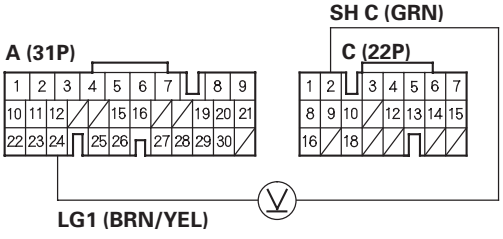

Wire side of female terminals

Is there voltage?

YES—Repair short to power in the wire between PCM connector terminal C2 and the shift solenoid valve C.■

NO—Go to step 5.

5. Turn the ignition switch OFF.

6. Disconnect the shift solenoid harness connector at the transmission housing.

7. Check for continuity between PCM connector terminals C2 and A24.

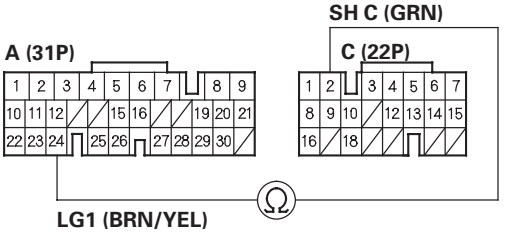

Wire side of female terminals

Is there continuity?

YES—Repair short to ground in the wire between PCM connector terminal C2 and the shift solenoid harness.■

NO—Go to step 8.

8. Connect the shift solenoid harness connector.

9. Measure the resistance between PCM connector terminals C2 and A24.

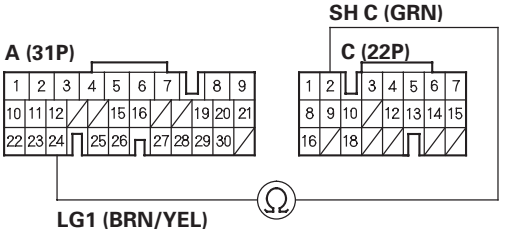

Wire side of female terminals

Is there 12—25 Ω ?

YES—Update the PCM if it does not have the latest software, or substitute a known-good PCM (see page 14-7), then recheck. If the symptom/indication goes away with a known-good PCM, replace the original PCM.■

NO—Go to step 10.

(cont'd)

DTC Troubleshooting (cont'd)

10. Disconnect the shift solenoid harness connector.

11. Check for continuity between PCM connector terminal C2 and shift solenoid harness connector terminal No. 1.

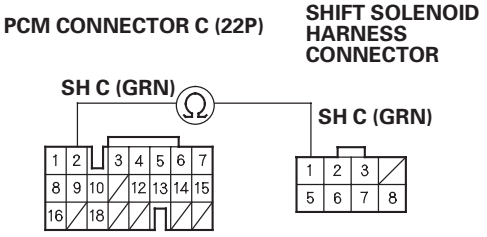

Wire side of female terminals

Is there continuity?

YES—Check the shift solenoid valve C, and check for an open in the shift solenoid harness in the transmission (see page 14-258). ■

NO—Repair open in the wire between PCM connector terminal C2 and the shift solenoid harness. ■

DTC P0768: Problem in Shift Solenoid Valve D Circuit

2002-2004 Models

NOTE:
- Record all freeze data and review General Troubleshooting Information (see page 14-3) before you troubleshoot.
- This code is caused by an electrical circuit problem and cannot be caused by a mechanical problem in the transmission.

1. Turn the ignition switch OFF.
2. Disconnect PCM connectors A (31P) and C (22P).
3. Turn the ignition switch ON (II).
4. Measure the voltage between PCM connector terminals C5 and A24.

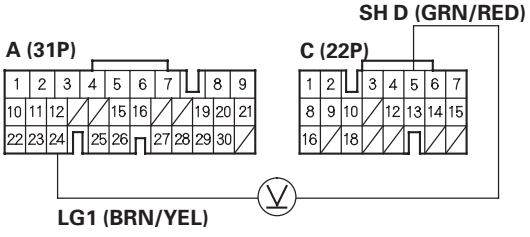

Wire side of female terminals

Is there voltage?

YES—Repair short to power in the wire between PCM connector terminal C5 and the shift solenoid valve D.■

NO—Go to step 5.

5. Turn the ignition switch OFF.
6. Disconnect the shift solenoid harness connector at the transmission housing.
7. Check for continuity between PCM connector terminals C5 and A24.

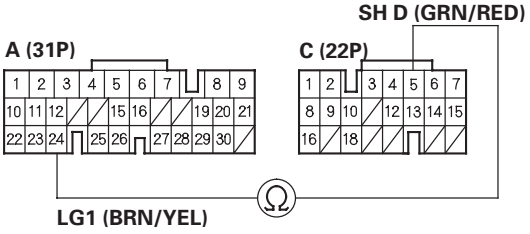

Wire side of female terminals

Is there continuity?

YES—Repair short to ground in the wire between PCM connector terminal C5 and the shift solenoid harness.■

NO—Go to step 8.

8. Connect the shift solenoid harness connector.
9. Measure the resistance between PCM connector terminals C5 and A23 or A24.

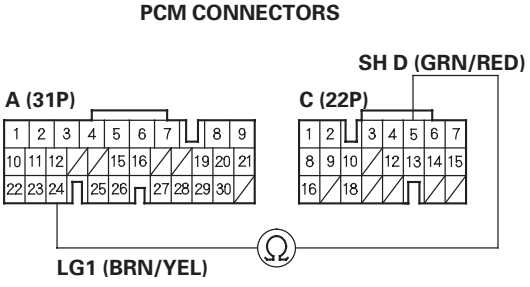

Wire side of female terminals

Is there 12—25 Ω ?

YES—Update the PCM if it does not have the latest software, or substitute a known-good PCM (see page 14-7), then recheck. If the symptom/indication goes away with a known-good PCM, replace the original PCM.■

NO—Go to step 10.

(cont'd)

DTC Troubleshooting (cont'd)

10. Disconnect the shift solenoid harness connector.

11. Check for continuity between PCM connector terminal C5 and shift solenoid harness connector terminal No. 8.

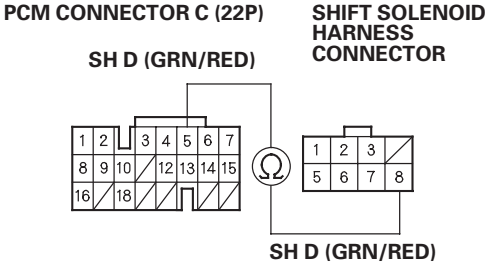

Wire side of female terminals

Is there continuity?

YES—Check the shift solenoid valve D, and check for an open in the shift solenoid harness in the transmission (see page 14-258). ■

NO—Repair open in the wire between PCM connector terminal C5 and the shift solenoid harness. ■

DTC P0773: Problem in Shift Solenoid Valve E Circuit

2002-2004 Models

NOTE:
- Record all freeze data and review General Troubleshooting Information (see page 14-3) before you troubleshoot.
- This code is caused by an electrical circuit problem and cannot be caused by a mechanical problem in the transmission.

1. Turn the ignition switch OFF.

2. Disconnect PCM connectors A (31P) and C (22P).

3. Turn the ignition switch ON (II).

4. Measure the voltage between PCM connector terminals C3 and A24.

PCM CONNECTORS

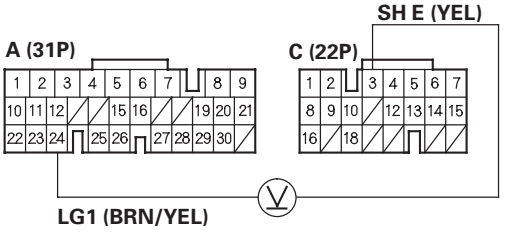

Wire side of female terminals

Is there voltage?

YES—Repair short to power in the wire between PCM connector terminal C3 and the shift solenoid valve E.■

NO—Go to step 5.

5. Turn the ignition switch OFF.

6. Disconnect the shift solenoid harness connector at the transmission housing.

7. Check for continuity between PCM connector terminals C3 and A24.

PCM CONNECTORS

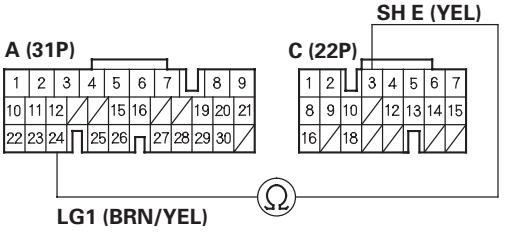

Wire side of female terminals

Is there continuity?

YES—Repair short to ground in the wire between PCM connector terminal C3 and the shift solenoid harness.■

NO—Go to step 8.

8. Connect the shift solenoid harness connector.

9. Measure the resistance between PCM connector terminals C3 and A24.

PCM CONNECTORS

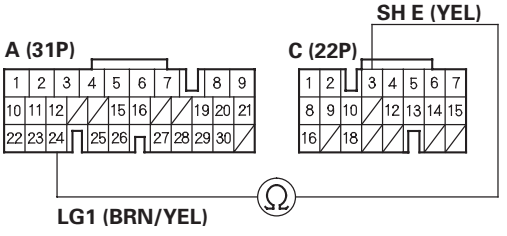

Wire side of female terminals

Is there 12—25 Ω ?

YES—Update the PCM if it does not have the latest software, or substitute a known-good PCM (see page 14-7), then recheck. If the symptom/indication goes away with a known-good PCM, replace the original PCM.■

NO—Go to step 10.

(cont'd)

DTC Troubleshooting (cont'd)

10. Disconnect the shift solenoid harness connector.

11. Check for continuity between PCM connector terminal C3 and shift solenoid harness connector terminal No. 3.

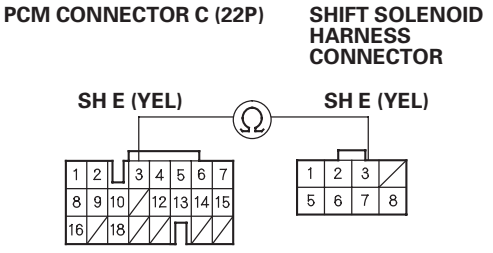

Wire side of female terminals

Is there continuity?

YES—Check the shift solenoid valve E, and check for an open in the shift solenoid harness in the transmission (see page 14-258). ■

NO—Repair open in the wire between PCM connector terminal C3 and the shift solenoid harness. ■

DTC P0775: Problem in the Hydraulic Control System of A/T Clutch Pressure Control Solenoid Valve B Circuit

2002-2004 Models

NOTE: Record all freeze data and review General Troubleshooting Information (see page 14-3) before you troubleshoot.

1. Check whether the scan tool or the HDS indicates another code.

   Does the scan tool or the HDS indicate another code?

   YES—Perform the troubleshooting for the indicated code(s). Turn the ignition switch OFF, and go to step 4 after troubleshooting.

   NO—Go to step 2.

2. Drain the ATF (see page 14-272) through a strainer. Inspect the strainer for metal debris or excessive clutch material.

   Does the strainer contain metal debris or excessive clutch material?

   YES—Replace the transmission. ■

   NO—Replace the ATF (see page 14-272), then go to step 3.

3. Turn the ignition switch OFF.

4. Replace the A/T clutch pressure control solenoid valve B (with C as a set) (see page 14-265).

5. Reset the PCM memory by removing the No. 6 ECU (15 A) fuse in the under-hood fuse/relay box for more than 10 seconds (see page 14-6).

6. Start the engine, and shift to the M position. Test-drive the vehicle in 2nd gear at 25 mph (40 km/h) for 10 seconds, shift to 3rd gear, drive at 25 mph (40 km/h) for 10 seconds, then decelerate to a stop. Do not stop the engine. Start off in 1st gear in the M position, and drive in 1st gear at 19 mph (30 km/h) for 10 seconds.

7. Repeat step 6 to test-drive the vehicle.

8. Recheck for DTC P0775.

   Does the scan tool or the HDS indicate code P0775?

   YES—Replace the transmission assembly. ■

   NO—The problem has been corrected. ■

DTC Troubleshooting (cont'd)

DTC P0778: Problem in A/T Clutch Pressure Control Solenoid Valve B Circuit

2002-2004 Models

NOTE:
- Record all freeze data and review General Troubleshooting Information (see page 14-3) before you troubleshoot.
- This code is caused by an electrical circuit problem and cannot be caused by a mechanical problem in the transmission.

1. Disconnect the A/T clutch pressure control solenoid valve B connector.

2. Measure A/T clutch pressure control solenoid valve B resistance at the solenoid valve connector terminals.

A/T CLUTCH PRESSURE CONTROL SOLENOID VALVE B CONNECTOR

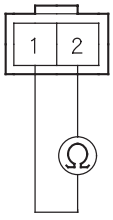

Terminal side of male terminals

Is there 3– 10 Ω ?

YES—Go to step 3.

NO—Replace the A/T clutch pressure control solenoid valve B.■

3. Disconnect PCM connectors B (24P) and C (22P).

4. Check for continuity between PCM connector terminals B16 and body ground, and between C8 and body ground.

PCM CONNECTORS

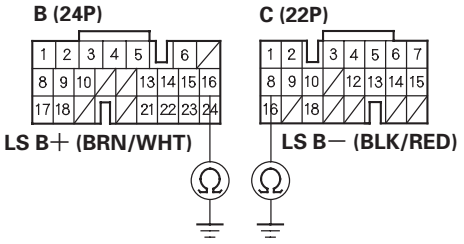

Wire side of female terminals

Is there continuity?

YES—Repair short to ground in the wires between PCM connector terminals B16 and the A/T clutch pressure control solenoid valve B, and between C8 and the A/T clutch pressure control solenoid valve B.■

NO—Go to step 5.

5. Connect the A/T clutch pressure control solenoid valve B connector.

6. Measure the resistance between PCM connector terminals B16 and C8.

PCM CONNECTORS

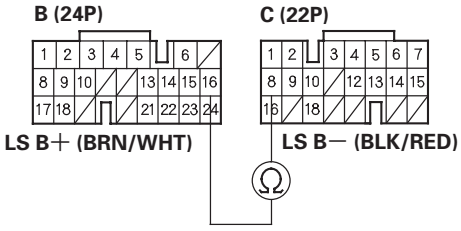

Wire side of female terminals

Is there 3− 10 Ω ?

YES—Go to step 7.

NO—Repair loose terminal or open in the wires between PCM connector terminals B16 and the A/T clutch pressure control solenoid valve B, and between C8 and the A/T clutch pressure control solenoid valve B. ■

7. Disconnect PCM connector A (31P).

8. Check for continuity between PCM connector terminals A23 and body ground, and between A24 and body ground.

PCM CONNECTOR A (31P)

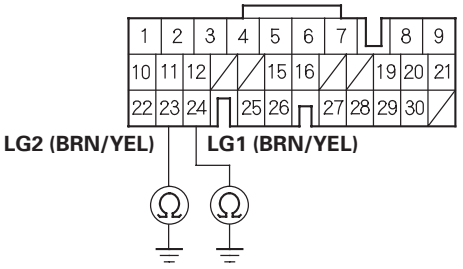

Wire side of female terminals

Is there continuity?

YES—Update the PCM if it does not have the latest software, or substitute a known-good PCM (see page 14-7), then recheck. If the symptom/indication goes away with a known-good PCM, replace the original PCM. ■

NO—Repair open in the wires between PCM connector terminals A23 and ground (G101), and between A24 and ground (G101), and repair poor ground (G101). ■

DTC Troubleshooting (cont'd)

DTC P0780: Mechanical Problem in Hydraulic Control System

2002-2004 Models

NOTE:
- Record all freeze data and review General Troubleshooting Information (see page 14-3) before you troubleshoot.
- This code is caused by an electrical circuit problem and cannot be caused by a mechanical problem in the transmission.
- Keep replacement solenoid valves on hand;
  – A/T clutch pressure control solenoid valves A, B, and C
  – Shift solenoid valves A, B, C, D, and E

1. Warm up the engine to normal operating temperature (the radiator fan comes on).

2. Check to be sure that the transmission is filled to the proper level, and check for fluid leaks.

3. Drain the ATF (see page 14-272) through a strainer. Inspect the strainer for metal debris or excessive clutch material.

   Does the strainer contain metal debris or excessive clutch material?

   YES—Replace the transmission. ■

   NO—Replace the ATF (see page 14-272), then go to step 4.

4. Reset the PCM memory by removing the No. 6 ECU (15 A) fuse in the under-hood fuse/relay box for more than 10 seconds (see page 14-6).

5. Drive the vehicle for several minutes in 1st, 2nd, 3rd, 4th, and 5th gears in the D position, and stop the vehicle. Do not stop the engine.

6. Repeat step 5 five times.

7. Recheck for DTC P0780.

   Does the scan tool or the HDS indicate code P0780?

   YES—Go to step 8.

   NO—The problem has been corrected. ■

8. Turn the ignition switch OFF.

9. Check whether the scan tool or the HDS indicates another code.

   Does the scan tool or the HDS indicate another code?

   YES—Perform the troubleshooting for the indicated code(s). Check for DTC P0780 after troubleshooting. ■

   NO—Go to step 10.

10. Turn the ignition switch OFF.

11. Replace the A/T clutch pressure control solenoid valve A (see page 14-263).

12. Replace the A/T clutch pressure control solenoid valves B and C (see page 14-265).

13. Reset the PCM memory by removing the No. 6 ECU (15 A) fuse in the under-hood fuse/relay box for more than 10 seconds (see page 14-6).

14. Drive the vehicle for several minutes in 1st, 2nd, 3rd, 4th, and 5th gears in the D position, and stop the vehicle. Do not stop the engine.

15. Repeat step 14 five times.

16. Recheck for DTC P0780.

    Does the scan tool or the HDS indicate code P0780?

    YES—Go to step 17.

    NO—The problem has been corrected. ■

17. Turn the ignition switch OFF.

18. Replace the shift solenoid valves A, B, C, D, and E (see page 14-260).

19. Reset the PCM memory by removing the No. 6 ECU (15 A) fuse in the under-hood fuse/relay box for more than 10 seconds (see page 14-6).

20. Drive the vehicle for several minutes in 1st, 2nd, 3rd, 4th, and 5th gears in the D position, and stop the vehicle. Do not stop the engine.

21. Repeat step 20 five times.

22. Recheck for DTC P0780.

    Does the scan tool or the HDS indicate code P0780?

    YES—Go to step 23.

    NO—The problem has been corrected. ■

23. Check for warranty coverage.

    Is the vehicle under warranty?

    YES—Replace the transmission assembly. ■

    NO—Go to step 24 or replace the transmission assembly.

24. Turn the ignition switch OFF.

25. Remove the transmission, and overhaul transmission hydraulic control system.

26. Install the transmission on the vehicle.

27. Reset the PCM memory by removing the No. 6 ECU (15 A) fuse in the under-hood fuse/relay box for more than 10 seconds (see page 14-6).

28. Drive the vehicle for several minutes in 1st, 2nd, 3rd, 4th, and 5th gears in the D position, and stop the vehicle. Do not stop the engine.

29. Repeat step 28 five times.

30. Recheck for DTC P0780.

    Does the scan tool or the HDS indicate code P0780?

    YES—Replace the transmission assembly. ■

    NO—The problem has been corrected. ■

DTC Troubleshooting (cont'd)

DTC P0795: Problem in Hydraulic Control System of A/T Clutch Pressure Control Solenoid Valve C Circuit

2002-2004 Models

NOTE: Record all freeze data and review General Troubleshooting Information (see page 14-3) before you troubleshoot.

1. Warm up the engine to normal operating temperature (the radiator fan comes on).

2. Check to be sure that the transmission is filled to the proper level, and check for fluid leaks.

3. Drain the ATF (see page 14-272) through a strainer. Inspect the strainer for metal debris or excessive clutch material.

   Does the strainer contain metal debris or excessive clutch material?

   YES—Replace the transmission. ■

   NO—Replace the ATF (see page 14-272), then go to step 4.

4. Reset the PCM memory by removing the No. 6 ECU (15 A) fuse in the under-hood fuse/relay box for more than 10 seconds (see page 14-6).

5. Drive the vehicle in the M position, and drive in 5th gear at 25 mph (40 km/h) for 10 seconds, then downshift to 3rd gear. Drive in 3rd gear at 25 mph (40 km/h) for 10 secnds, and decelerate to a stop.

6. Recheck for DTC P0795.

   Does the scan tool or the HDS indicate code P0795?

   YES—Go to step 7.

   NO—The problem has been corrected. ■

7. Check whether the scan tool or the HDS indicates another code.

   Does the scan tool or the HDS indicate another code?

   YES—Perform the troubleshooting for the indicated code(s). Turn the ignition switch OFF, and go to step 10 after troubleshooting.

   NO—Go to step 8.

8. Turn the ignition switch OFF.

9. Replace the A/T clutch pressure control solenoid valve C (see page 14-265).

10. Reset the PCM memory by removing the No. 6 ECU (15 A) fuse in the under-hood fuse/relay box for more than 10 seconds (see page 14-6).

11. Drive the vehicle in the M position, and drive in 5th gear at 25 mph (40 km/h) for 10 seconds, then downshift to 3rd gear. Drive in 3rd gear at 25 mph (40 km/h) for 10 seconds, and decelerate to a stop.

12. Recheck for DTC P0795.

    Does the scan tool or the HDS indicate code P0795?

    YES—Go to step 13.

    NO—The problem has been corrected. ■

13. Check for warranty coverage.

    Is the vehicle under warranty?

    YES—Replace the transmission assembly. ■

    NO—Go to step 14 or replace the transmission assembly.

14. Turn the ignition switch OFF.

15. Remove the transmission, and overhaul transmission hydraulic control system and the 3rd and 5th clutch lines.

16. Install the transmission on the vehicle.

17. Reset the PCM memory by removing the No. 6 ECM (15 A) fuse in the under-hood fuse/relay box for more than 10 seconds (see page 14-6).

18. Drive the vehicle in the M position, and drive in 5th gear at 25 mph (40 km/h) for 10 seconds, then downshift to 3rd gear. Drive in 3rd gear at 25 mph (40 km/h) for 10 seconds, and decelerate to a stop.

19. Recheck for DTC P0795.

    Does the scan tool or the HDS indicate code P0795?

    YES—Replace the transmission assembly. ■

    NO—The problem has been corrected. ■

DTC Troubleshooting (cont'd)

DTC P0798: Problem in A/T Clutch Pressure Control Solenoid Valve C Circuit

2002-2004 Models

NOTE:
- Record all freeze data and review General Troubleshooting Information (see page 14-3) before you troubleshoot.
- This code is caused by an electrical circuit problem and cannot be caused by a mechanical problem in the transmission.

1. Disconnect the A/T clutch pressure control solenoid valve C connector.

2. Measure A/T clutch pressure control solenoid valve C resistance at the solenoid valve connector terminals.

A/T CLUTCH PRESSURE CONTROL SOLENOID VALVE C CONNECTOR

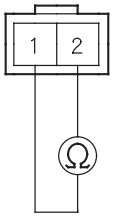

Terminal side of male terminals

Is there 3— 10 Ω ?

YES—Go to step 3.

NO—Replace the A/T clutch pressure control solenoid valve C.■

3. Disconnect PCM connectors B (24P) and C (22P).

4. Check for continuity between PCM connector terminals B24 and body ground, and between C16 and body ground.

PCM CONNECTORS

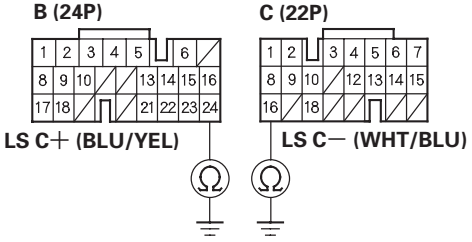

Wire side of female terminals

Is there continuity?

YES—Repair short to ground in the wires between PCM connector terminals B24 and the A/T clutch pressure control solenoid valve C, and between C16 and the A/T clutch pressure control solenoid valve C.■

NO—Go to step 5.

5. Connect the A/T clutch pressure control solenoid valve C connector.

6. Measure the resistance between PCM connector terminals B24 and C16.

PCM CONNECTORS

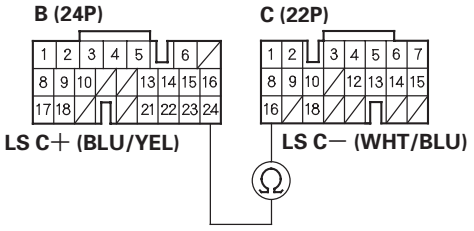

Wire side of female terminals

Is there 3− 10 Ω ?

YES—Go to step 7.

NO—Repair loose terminal or open in the wires between PCM connector terminals B24 and the A/T clutch pressure control solenoid valve C, and between C16 and the A/T clutch pressure control solenoid valve C. ■

7. Disconnect PCM connector A (31P).

8. Check for continuity between PCM connector terminals A23 and body ground, and between A24 and body ground.

PCM CONNECTOR A (31P)

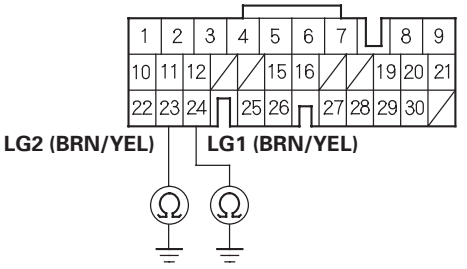

Wire side of female terminals

Is there continuity?

YES—Update the PCM if it does not have the latest software, or substitute a known-good PCM (see page 14-7), then recheck. If the symptom/indication goes away with a known-good PCM, replace the original PCM. ■

NO—Repair open in the wires between PCM connector terminals A23 and ground (G101), and between A24 and ground (G101), and repair poor ground (G101). ■

DTC Troubleshooting (cont'd)

DTC P0840: Problem in 2nd Clutch Transmission Fluid Pressure Switch Circuit

2002-2004 Models

NOTE: Record all freeze data and review General Troubleshooting Information (see page 14-3) before you troubleshoot.

1. Disconnect the 2nd clutch transmission fluid pressure switch.
2. Turn the ignition switch ON (II).
3. Measure the voltage between PCM connector terminal C13 and body ground.

PCM CONNECTOR C (22P)

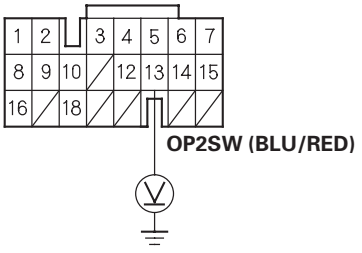

Wire side of female terminals

Is there about 5 V?

YES—Go to step 4.

NO—Check for short to ground in the wire between PCM connector terminal C13 and the 2nd clutch transmission fluid pressure switch. If wire is OK, update the PCM if it does not have the latest software, or substitute a known-good PCM (see page 14-7), then recheck. If the symptom/indication goes away with a known-good PCM, replace the original PCM. ■

4. Measure the voltage between the 2nd clutch transmission fluid pressure switch connector terminal and body ground.

2ND CLUTCH TRANSMISSION FLUID PRESSURE SWITCH CONNECTOR

Wire side of female terminal

Is there about 5 V?

YES—Go to step 5.

NO—Repair open in the wire between PCM connector terminal C13 and the 2nd clutch transmission fluid pressure switch. ■

5. Turn the ignition switch OFF.
6. Measure the resistance between the 2nd clutch transmission fluid pressure switch connector terminal and body ground.

2ND CLUTCH TRANSMISSION FLUID PRESSURE SWITCH CONNECTOR

Terminal side of male terminals

Is there 40 MΩ or more?

NOTE: An open circuit is greater than 40 MΩ

YES—Replace the 2nd clutch transmission fluid pressure switch. ■

NO—Go to step 7.

7. Connect the 2nd clutch transmission fluid pressure switch connector.

8. Raise the front of the vehicle, make sure it is securely supported, and allow the front wheels to rotate freely.

9. Start the engine, and shift into the M position.

10. Accelerate slowly, and drive the vehicle in 2nd gear for more than 5 seconds.

11. While driving in 2nd gear, measure the voltage between PCM connector terminal C13 and body ground.

PCM CONNECTOR C (22P)

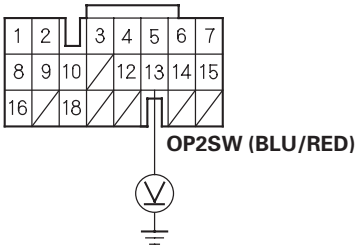

Wire side of female terminals

Is there 0 V?

YES—Update the PCM if it does not have the latest software, or substitute a known-good PCM (see page 14-7), then recheck. If the symptom/indication goes away with a known-good PCM, replace the original PCM. ■

NO—Check 2nd clutch pressure. If pressure is in specification, replace the 2nd clutch transmission fluid pressure switch. ■

DTC Troubleshooting (cont'd)

DTC P0845: Problem in 3rd Clutch Transmission Fluid Pressure Switch Circuit

2002-2004 Models

NOTE: Record all freeze data and review General Troubleshooting Information (see page 14-3) before you troubleshoot.

1. Disconnect the 3rd clutch transmission fluid pressure switch.
2. Turn the ignition switch ON (II).
3. Measure the voltage between PCM connector terminal C10 and body ground.

PCM CONNECTOR C (22P)

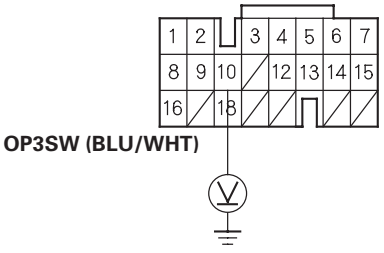

Wire side of female terminals

Is there about 5 V?

YES—Go to step 4.

NO—Check for short to ground in the wire between PCM connector terminal C10 and the 3rd clutch transmission fluid pressure switch. If wire is OK, update the PCM if it does not have the latest software, or substitute a known-good PCM (see page 14-7), then recheck. If the symptom/indication goes away with a known-good PCM, replace the original PCM. ■

4. Measure the voltage between the 3rd clutch transmission fluid pressure switch connector terminal and body ground.

3RD CLUTCH TRANSMISSION FLUID PRESSURE SWITCH CONNECTOR

Wire side of female terminals

Is there about 5 V?

YES—Go to step 5.

NO—Repair open in the wire between PCM connector terminal C10 and the 3rd clutch transmission fluid pressure switch. ■

5. Turn the ignition switch OFF.
6. Measure the resistance between the 3rd clutch transmission fluid pressure switch connector terminal and body ground.

3RD CLUTCH TRANSMISSION FLUID PRESSURE SWITCH CONNECTOR

Terminal side of male terminals

Is there 40 MΩ or more?

NOTE: An open circuit is greater than 40 MΩ.

YES—Replace the 3rd clutch transmission fluid pressure switch. ■

NO—Go to step 7.

7. Connect the 3rd clutch transmission fluid pressure switch connector.

8. Raise the front of the vehicle, make sure it is securely supported, and allow the front wheels to rotate freely.

9. Start the engine, and shift into the M position.

10. Accelerate slowly, and drive the vehicle in 3rd gear for more than 5 seconds.

11. While driving in 3rd gear, measure the voltage between PCM connector terminal C10 and body ground.

PCM CONNECTOR C (22P)

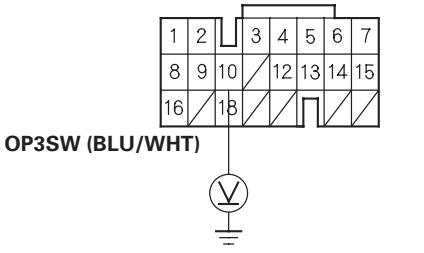

Wire side of female terminals

Is there 0 V?

YES—Update the PCM if it does not have the latest software, or substitute a known-good PCM (see page 14-7), then recheck. If the symptom/indication goes away with a known-good PCM, replace the original PCM. ■

NO—Check 3rd clutch pressure. If pressure is in specification, replace the 3rd clutch transmission fluid pressure switch. ■

DTC Troubleshooting (cont'd)

DTC P1705: Short in Transmission Range Switch Circuit (More than one range position is on at the same time.)

2002-2004 Models

NOTE:
- Record all freeze data and review General Troubleshooting Information (see page 14-3) before you troubleshoot.
- This code is caused by an electrical circuit problem and cannot be caused by a mechanical problem in the transmission.

1. Turn the ignition switch ON (II).

2. Observe the A/T gear position indicator in gauge assembly while shifting to each position.

   Do any indicators stay on when the shift lever is not in that position?

   YES—Go to step 3.

   NO—Turn the ignition switch OFF, then go to step 4.

3. Disconnect the transmission range switch connector, and watch the A/T gear position indicator.

   Do all gear position indicators go out?

   YES—Go to step 4.

   NO—Turn the ignition switch OFF, then go to step 5.

4. Inspect the transmission range switch (see page 14-306).

   Is the switch OK?

   YES—Go to step 5.

   NO—Replace the transmission range switch. ■

5. Connect the transmission range switch connector.

6. Turn the ignition switch ON (II).

7. Shift to all positions other than P.

8. Measure the voltage between PCM connector terminals D6 and A24.

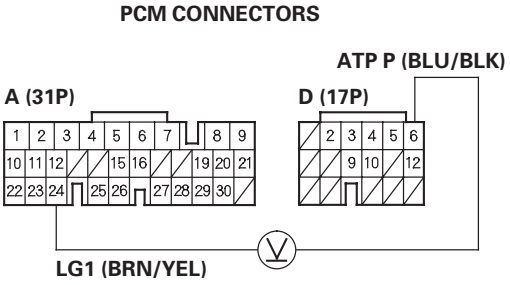

Wire side of female terminals

Is there 5 V—battery voltage?

YES—Go to step 9.

NO—Check for a short in the wire between PCM connector terminal D6 and the transmission range switch or gauge assembly, and check for an open in the wires between ground G101 and PCM connector terminals A23 and A24. If the wires are OK, update the PCM if it does not have the latest software, or substitute a known-good PCM (see page 14-7), then recheck. If the symptom/indication goes away with a known-good PCM, replace the original PCM. ■

9. Shift to all positions other than R.

10. Measure the voltage between PCM connector terminals D5 and A24.

PCM CONNECTORS

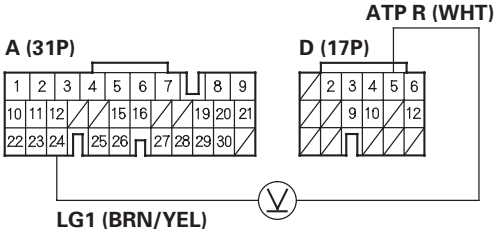

Wire side of female terminals

Is there 5V—battery voltage?

YES—Go to step 11.

NO—Check for a short in the wire between PCM connector terminal D5 and the transmission range switch or gauge assembly. If the wire is OK, update the PCM if it does not have the latest software, or substitute a known-good PCM (see page 14-7), then recheck. If the symptom/indication goes away with a known-good PCM, replace the original PCM.■

11. Measure the voltage between PCM connector terminals C12 and A24.

PCM CONNECTORS

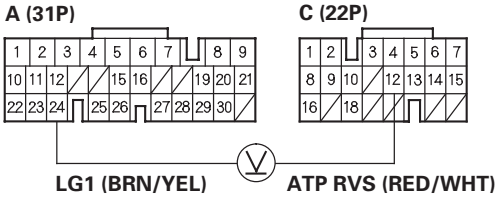

Wire side of female terminals

Is there about 5 V?

YES—Go to step 12.

NO—Check for a short in the wire between PCM connector terminal C12 and the transmission range switch. If the wire is OK, update the PCM if it does not have the latest software, or substitute a known-good PCM (see page 14-7), then recheck. If the symptom/indication goes away with a known-good PCM, replace the original PCM.■

(cont'd)

DTC Troubleshooting (cont'd)

12. Shift to all positions other than N.

13. Measure the voltage between PCM connector terminals D4 and A24.

PCM CONNECTORS

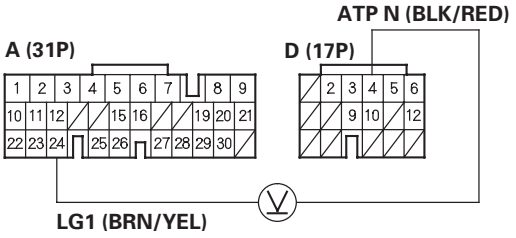

Wire side of female terminals

Is there 5 V—battery voltage?

YES—Go to step 14.

NO—Check for a short in the wire between PCM connector terminal D4 and the transmission range switch, gauge assembly, or shift lock relay diode. If the wire is OK, update the PCM if it does not have the latest software, or substitute a known-good PCM (see page 14-7), then recheck. If the symptom/indication goes away with a known-good PCM, replace the original PCM. ■

14. Shift to all positions other than D.

15. Measure the voltage between PCM connector terminals D10 and A24.

PCM CONNECTORS

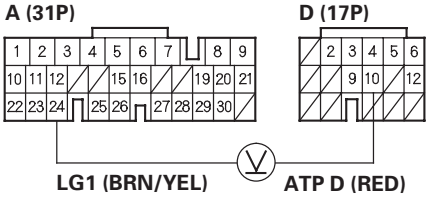

Wire side of female terminals

Is there about 5 V?

YES—Go to step 16.

NO—Check for a short in the wire between PCM connector terminal D10 and the transmission range switch. If the wire is OK, update the PCM if it does not have the latest software, or substitute a known-good PCM (see page 14-7), then recheck. If the symptom/indication goes away with a known-good PCM, replace the original PCM. ■

16. Shift to all positions other than D3.

17. Measure the voltage between PCM connector terminals C9 and A24.

PCM CONNECTORS

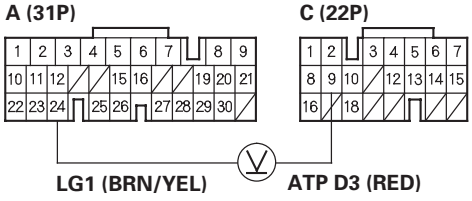

Wire side of female terminals

Is there about 5 V?

YES—Go to step 18.

NO—Check for a short in the wire between PCM connector terminal C9 and the transmission range switch. If the wire is OK, Update the PCM if it does not have the latest software, or substitute a known-good PCM (see page 14-7), then recheck. If the symptom/indication goes away with a known-good PCM, replace the original PCM. ■

18. Shift to all positions other than D and D3.

19. Measure the voltage between PCM connector terminals C18 and A24.

PCM CONNECTORS

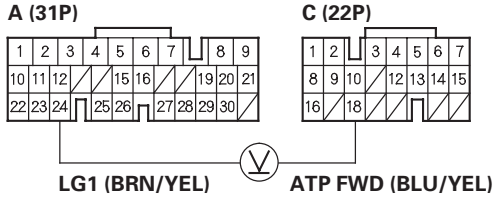

Wire side of female terminals

Is there 5 V—battery voltage?

YES—The PCM has failed; replace it. ■

NO—Check for a short in the wire between PCM connector terminal C18 and the transmission range switch or cruise control unit. If the wire is OK, Update the PCM if it does not have the latest software, or substitute a known-good PCM (see page 14-7), then recheck. If the symptom/indication goes away with a known-good PCM, replace the original PCM. ■

DTC Troubleshooting (cont'd)

DTC P1706: Open in Transmission Range Switch Circuit (No range position shown)

2002-2004 Models

NOTE:
- Record all freeze data and review General Troubleshooting Information (see page 14-3) before you troubleshoot.
- This code is caused by an electrical circuit problem and cannot be caused by a mechanical problem in the transmission.

1. Check whether DTC P1705 is indicated.

   Does the scan tool or the HDS indicate code P1705?

   YES—Perform the troubleshooting for DTC P1705, then go to step 2.

   NO—Go to step 8.

2. Turn the ignition switch OFF.

3. Reset the PCM memory by removing the No. 6 ECU (15 A) fuse in the under-hood fuse/relay box for more than 10 seconds (see page 14-6).

4. Drive the vehicle in the D position until vehicle speed reaches 37 mph (60 km/h), then slow down and stop.

5. Turn the ignition switch OFF, and turn it ON (II).

6. Test-drive the vehicle as in step 4.

7. Recheck for DTC P1706.

   Does the scan tool or the HDS indicate code P1706?

   YES—Go to step 8.

   NO—The problem has been corrected. ■

8. Inspect the transmission range switch (see page 14-306).

   Is the switch OK?

   YES—Go to step 9.

   NO—Replace the transmission range switch. ■

9. Connect the transmission range switch connector.

10. Check for continuity between PCM connector terminals A23 and body ground, and between A24 and body ground.

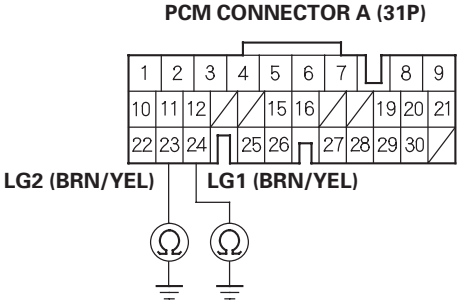

Wire side of female terminals

Is there continuity?

YES—Go to step 11.

NO—Repair open in the wire between PCM connector terminals A23 and ground (G101), and between A24 and ground (G101), and repair poor ground (G101). ■

11. Turn the ignition switch ON (II).

12. Shift to the D position.

13. Measure the voltage between PCM connector terminals C18 and A24.

PCM CONNECTORS

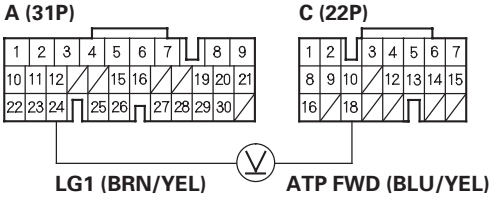

Wire side of female terminals

Is there 5 V—battery voltage?

YES—Repair open in the wire between PCM connector terminal C18 and the transmission range switch. ■

NO—Update the PCM if it does not have the latest software, or substitute a known-good PCM (see page 14-7), then recheck. If the symptom/indication goes away with a known-good PCM, replace the original PCM. ■

DTC Troubleshooting (cont'd)

DTC P1709: Problem in Transmission Gear Selection Switch Circuit

2002-2004 Models

NOTE:
- Record all freeze data and review General Troubleshooting Information (see page 14-3) before you troubleshoot.
- This code is caused by an electrical circuit problem and cannot be caused by a mechanical problem in the transmission.

1. Check whether DTC P1706 is indicated.

   Does the scan tool or the HDS indicate code P1706?

   YES—Perform the troubleshooting for code P1706. Recheck for code P1709 after troubleshooting. ■

   NO—Go to step 2.

2. Turn the ignition switch OFF.

3. Remove the shift lever console panel.

4. Disconnect the transmission gear selection switch/park pin switch connector (8P).

5. Turn the ignition switch ON (II).

6. Measure the voltage between transmission gear selection switch/park pin switch connector (8P) terminal No. 3 and body ground.

TRANSMISSION GEAR SELECTION SWITCH/PARK PIN SWITCH CONNECTOR (8P)

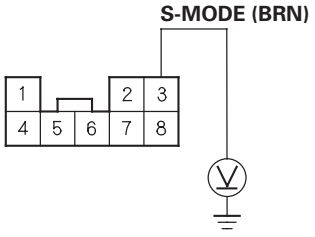

Wire side of female terminals

Is there about 5 V?

YES—Go to step 7.

NO—Repair open or short in the wire between PCM connector terminal D2 and the transmission gear selection switch/park pin switch connector (8P). ■

7. Measure the voltage between transmission gear selection switch/park pin switch connector (8P) terminals No. 3 and No. 7.

TRANSMISSION GEAR SELECTION SWITCH/PARK PIN SWITCH CONNECTOR (8P)

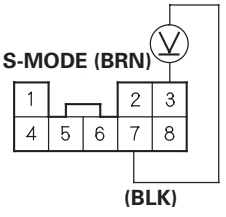

Wire side of female terminals

Is there about 5 V?

YES—Go to step 8.

NO—Repair open in the wire between the No. 7 terminal of the transmission gear selection switch/park pin switch connector (8P) and ground (G402), or repair poor ground (G402). ■

8. Measure the voltage between transmission gear selection switch/park pin switch connector (8P) terminals No. 2 and No. 7, and between No. 8 and No. 7.

TRANSMISSION GEAR SELECTION SWITCH/PARK PIN SWITCH CONNECTOR (8P)

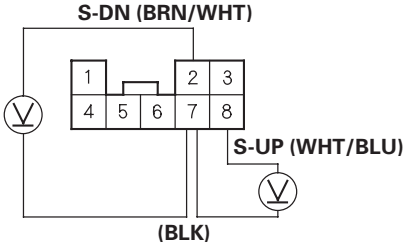

Wire side of female terminals

Are there about 5 V?

YES—Go to step 12.

NO—Go to step 9.

9. Turn the ignition switch OFF.

10. Disconnect PCM connector D (17P).

11. Check for continuity between PCM connector terminals D3 and body ground, and between D9 and body ground.

PCM CONNECTOR D (17P)

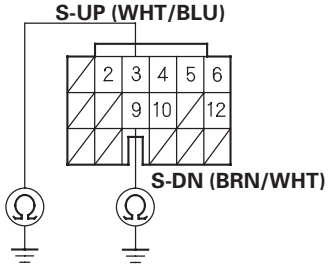

Wire side of female terminals

Is there continuity?

YES—Repair short to ground in the wire between PCM connector terminals D3 or D9 and the transmission gear selection switch/park pin switch connector (8P).■

NO—Turn the ignition switch ON (II), then go to step 12.

(cont'd)

DTC Troubleshooting (cont'd)

12. Check for continuity between transmission gear selection switch/park pin switch connector (8P) terminals No. 3 and No. 7 when the shift lever is shifted into the M position, and when the shift lever is shifted back to the D position.

TRANSMISSION GEAR SELECTION SWITCH/PARK PIN SWITCH CONNECTOR (8P)

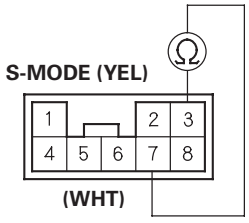

Terminal side of male terminals

Is there continuity when the shift lever in the M position, and no continuity when the shift lever in the D position?

YES—Go to step 13.

NO—Replace the transmission gear selection switch. ■

13. Check for continuity between transmission gear selection switch/park pin switch connector (8P) terminals No. 8 and No. 7 while shifting the shift lever to shift-up position (marked with +), and between the No. 2 and No. 7 terminals while shifting to shift-down position (marked with —), and also check for continuity between these terminals when the shift lever is shifted back to neutral position.

TRANSMISSION GEAR SELECTION SWITCH/PARK PIN SWITCH CONNECTOR (8P)

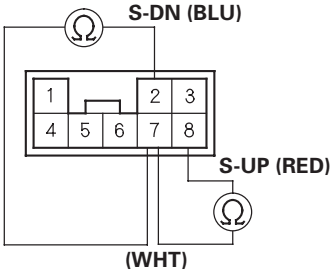

Terminal side of male terminals

Is there continuity when the shift lever is shifted to shift-up and shift-down positions, and no continuity when the shift lever is shifted back to neutral position?

YES—Update the PCM if it does not have the latest software, or substitute a known-good PCM (see page 14-7), then recheck. If the symptom/indication goes away with a known-good PCM, replace the original PCM. ■

NO—Replace the transmission gear selection switch. ■

DTC P1717: Problem in ATP RVS Signal Circuit of Transmission Range Switch

2002-2004 Models

NOTE:
- Record all freeze data and review General Troubleshooting Information (see page 14-3) before you troubleshoot.
- This code is caused by an electrical circuit problem and cannot be caused by mechanical problem in the transmission.

1. Check whether DTC P1705 or P1706 is indicated.

   Does the scan tool or the HDS indicate code P1705 or P1706?

   YES—Perform the troubleshooting for the indicated code(s), then go to step 2.

   NO—Go to step 6.

2. Shift the shift lever into the P position, and shift to R, N, D, then shift back to N, R, and into P. The shift lever should stop for more than 2 seconds at each position.

3. Turn the ignition switch OFF, then turn it ON (II).

4. Shift the shift lever to the R position for more than 2 seconds, then shift into the N position.

5. Check for DTC P1717.

   Does the scan tool or the HDS indicate code P1717?

   YES—Go to step 6.

   NO—The problem has been corrected. ■

6. Turn the ignition switch OFF.

7. Check for continuity between PCM connector terminals A23 and body ground, and between A24 and body ground.

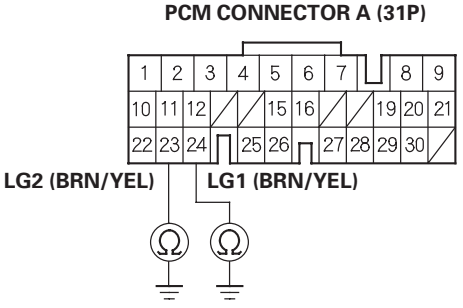

Wire side of female terminals

Is there continuity?

YES—Go to step 8.

NO—Repair open in the wires between PCM connector terminals A23 and ground (G101), and between A24 and ground (G101), and repair poor ground (G101). ■

(cont'd)

DTC Troubleshooting (cont'd)

8. Turn the ignition switch ON (II).

9. Shift to the R position.

10. Measure the voltage between PCM connector terminals C12 and A23 or A24.

PCM CONNECTORS

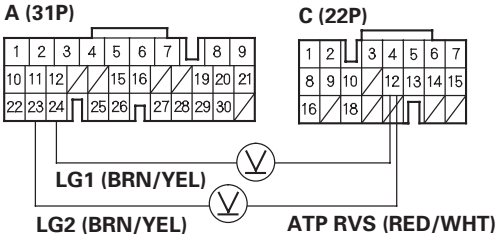

Wire side of female terminals

Is there voltage?

YES—Go to step 11.

NO—Update the PCM if it does not have the latest software, or substitute a known-good PCM (see page 14-7), then recheck. If the symptom/indication goes away with a known-good PCM, replace the original PCM. ■

11. Turn the ignition switch OFF.

12. Disconnect the transmission range switch connector.

13. Check for continuity between transmission range switch connector terminals No. 1 and No. 10. The shift position must be the R position.

TRANSMISSION RANGE SWITCH CONNECTOR

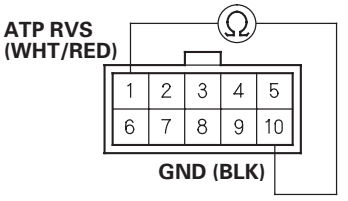

Terminal side of male terminals

Is there continuity?

YES—Repair open in the wire between PCM connector terminal C12 and the transmission range switch. ■

NO—Replace the transmission range switch. ■

DTC P0705: Short in Transmission Range Switch Circuit (Multiple Shift-position Input)

2005-2006 Models

NOTE:
- Record all freeze data and review General Troubleshooting Information (see page 14-8) before you troubleshoot.
- This code is caused by an electrical circuit problem and cannot be caused by a mechanical problem in the transmission.

1. Clear the DTC with the HDS.

2. Start the engine.

3. Move the shift lever to each position. Stop for at least 1 second in each position, and monitor the OBD status for P0705 in the DTCs/Freeze Data in A/T Mode Menu for a pass/fail.

   Does the result indicate a failed?

   YES—Go to step 4.

   NO—Intermittent failure, the system is OK at this time. Check for an intermittent short in the wires between the transmission range switch and PCM. If the tester indicates NOT COMPLETED, repeat this step and recheck. ■

4. Test the transmission range switch (see page 14-306).

   Is the switch OK?

   YES—Go to step 5.

   NO—Replace the transmission range switch, then go to step 49.

5. Turn the ignition switch ON (II).

6. Shift to all positions other than P.

7. Measure the voltage between PCM connector terminals D6 and A9.

PCM CONNECTORS

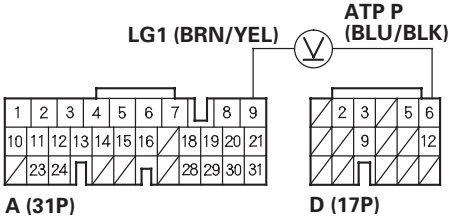

Wire side of female terminals

Is there battery voltage?

YES—Go to step 14.

NO—Go to step 8.

(cont'd)

DTC Troubleshooting (cont'd)

8. Turn the ignition switch OFF.

9. Jump the SCS line with the HDS.

10. Disconnect PCM connector D (17P).

11. Check for continuity between PCM connector terminal D6 and body ground.

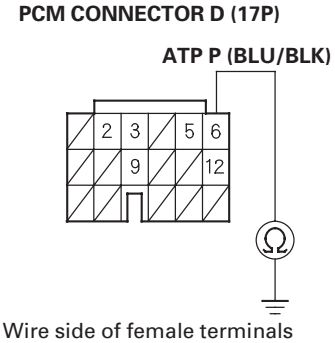

Is there continuity?

YES—Repair short to ground in the wire between PCM connector terminal D6 and the transmission range switch, then go to step 49.

NO—Go to step 12.

12. Disconnect PCM connector A (31P).

13. Check for continuity between PCM connector terminals A8 and body ground, and between A9 and body ground.

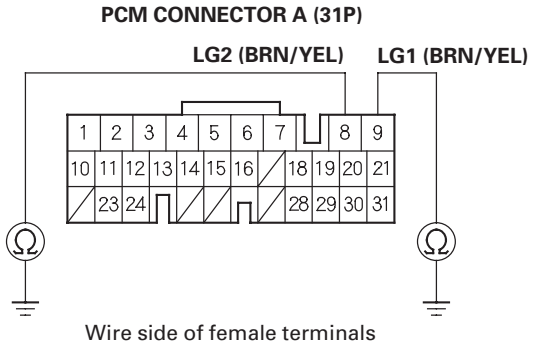

Is there continuity?

YES—Update the PCM if it does not have the latest software, or substitute a known-good PCM (see page 14-11), then recheck. If the symptom/indication goes away with a known-good PCM, replace the original PCM. ■

NO—Repair open in the wire between PCM connector terminals A8, A9, and ground (G101), or repair poor ground (G101), then go to step 49.

14. Shift to all positions other than R.

15. Measure the voltage between PCM connector terminals D5 and A9.

PCM CONNECTORS

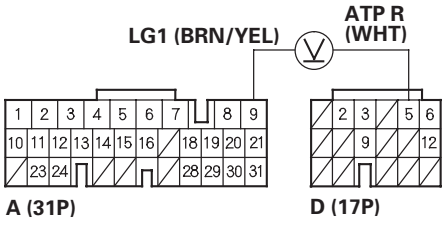

Wire side of female terminals

Is there battery voltage?

YES—Go to step 20.

NO—Go to step 16.

16. Turn the ignition switch OFF.

17. Jump the SCS line with the HDS.

18. Disconnect PCM connector D (17P).

19. Check for continuity between PCM connector terminal D5 and body ground.

PCM CONNECTOR D (17P)

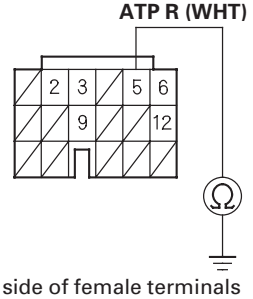

Wire side of female terminals

Is there continuity?

YES—Repair short to ground in the wire between PCM connector terminal D5 and the transmission range switch, then go to step 49.

NO—Update the PCM if it does not have the latest software, or substitute a known-good PCM (see page 14-11), then recheck. If the symptom/indication goes away with a known-good PCM, replace the original PCM. ■

(cont'd)

DTC Troubleshooting (cont'd)

20. Measure the voltage between PCM connector terminals C12 and A9.

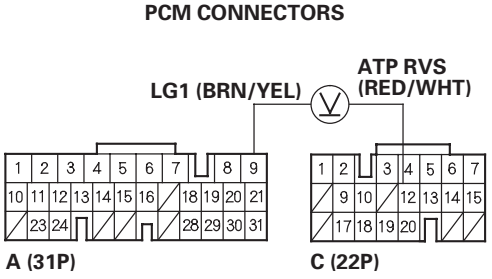

Wire side of female terminals

Is there battery voltage?

YES—Go to step 25.

NO—Go to step 21.

21. Turn the ignition switch OFF.

22. Jump the SCS line with the HDS.

23. Disconnect PCM connector C (22P).

24. Check for continuity between PCM connector terminal C12 and body ground.

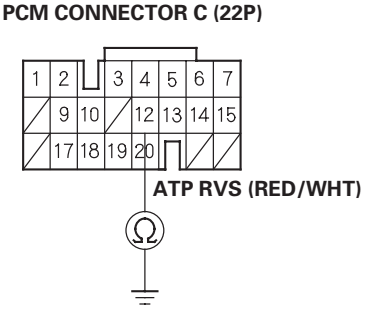

Wire side of female terminals

Is there continuity?

YES—Repair short to ground in the wire between PCM connector terminal C12 and the transmission range switch, then go to step 49.

NO—Update the PCM if it does not have the latest software, or substitute a known-good PCM (see page 14-11), then recheck. If the symptom/indication goes away with a known-good PCM, replace the original PCM. ■

25. Shift to all positions other than N.

26. Measure the voltage between PCM connector terminals C20 and A9.

PCM CONNECTORS

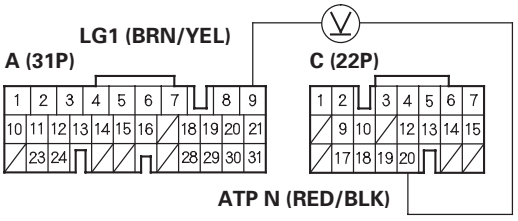

Wire side of female terminals

Is there battery voltage?

YES—Go to step 31.

NO—Go to step 27.

27. Turn the ignition switch OFF.

28. Jump the SCS line with the HDS.

29. Disconnect PCM connector C (22P).

30. Check for continuity between PCM connector terminal C20 and body ground.

PCM CONNECTOR C (22P)

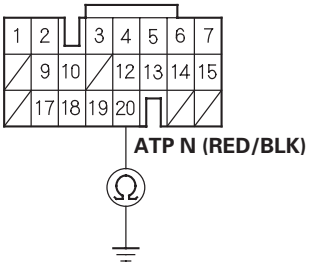

Wire side of female terminals

Is there continuity?

YES—Repair short to ground in the wire between PCM connector terminal C20 and the transmission range switch, then go to step 49.

NO—Update the PCM if it does not have the latest software, or substitute a known-good PCM (see page 14-11), then recheck. If the symptom/indication goes away with a known-good PCM, replace the original PCM. ■

(cont'd)

DTC Troubleshooting (cont'd)

31. Shift to all positions other than D.

32. Measure the voltage between PCM connector terminals C17 and A9.

PCM CONNECTORS

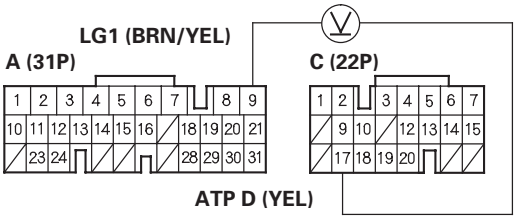

Wire side of female terminals

Is there battery voltage?

YES—Go to step 37.

NO—Go to step 33.

33. Turn the ignition switch OFF.

34. Jump the SCS line with the HDS.

35. Disconnect PCM connector C (22P).

36. Check for continuity between PCM connector terminal C17 and body ground.

PCM CONNECTOR C (22P)

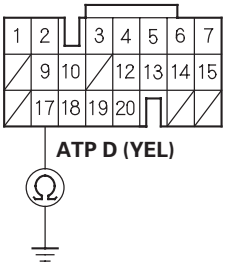

Wire side of female terminals

Is there continuity?

YES—Repair short to ground in the wire between PCM connector terminal C17 and the transmission range switch, then go to step 49.

NO—Update the PCM if it does not have the latest software, or substitute a known-good PCM (see page 14-11), then recheck. If the symptom/indication goes away with a known-good PCM, replace the original PCM. ■

37. Shift to all positions other than D3.

38. Measure the voltage between PCM connector terminals C9 and A9.

PCM CONNECTORS

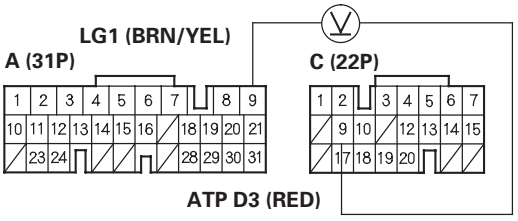

Wire side of female terminals

Is there battery voltage?

YES—Go to step 43.

NO—Go to step 39.

39. Turn the ignition switch OFF.

40. Jump the SCS line with the HDS.

41. Disconnect PCM connector C (22P).

42. Check for continuity between PCM connector terminal C9 and body ground.

PCM CONNECTOR C (22P)

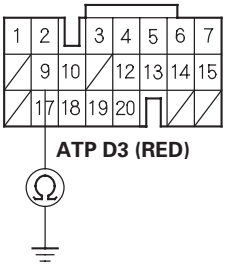

Wire side of female terminals

Is there continuity?

YES—Repair short to ground in the wire between PCM connector terminal C9 and the transmission range switch, then go to step 49.

NO—Update the PCM if it does not have the latest software, or substitute a known-good PCM (see page 14-11), then recheck. If the symptom/indication goes away with a known-good PCM, replace the original PCM. ■

(cont'd)

DTC Troubleshooting (cont'd)

43. Shift to all positions other than D and D3.

44. Measure the voltage between PCM connector terminals C18 and A9.

PCM CONNECTORS

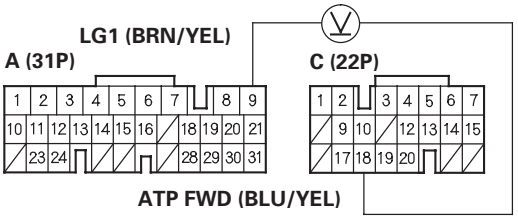

Wire side of female terminals

Is there battery voltage?

YES—Update the PCM if it does not have the latest software, or substitute a known-good PCM (see page 14-11), then recheck. If the symptom/indication goes away with a known-good PCM, replace the original PCM. ■

NO—Go to step 45.

45. Turn the ignition switch OFF.

46. Jump the SCS line with the HDS.

47. Disconnect PCM connector C (22P).

48. Check for continuity between PCM connector terminal C18 and body ground.

PCM CONNECTOR C (22P)

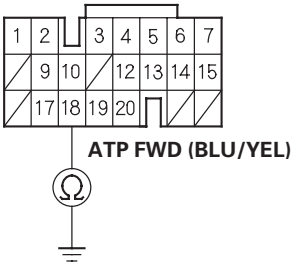

Wire side of female terminals

Is there continuity?

YES—Repair short to ground in the wire between PCM connector terminal C18 and the transmission range switch, then go to step 49.

NO—Update the PCM if it does not have the latest software, or substitute a known-good PCM (see page 14-11), then recheck. If the symptom/indication goes away with a known-good PCM, replace the original PCM. ■

49. Clear the DTC with the HDS.

50. Move the shift lever to each position, and monitor the OBD status for P0705 in the DTCs/Freeze Data in A/T Mode Menu for a pass/fail.

Does the result indicate a passed?

YES—Troubleshooting is completed. ■

NO—Return to step 1 and recheck.

DTC P0706: Open in Transmission Range Switch Circuit

2005-2006 Models

NOTE:
- Record all freeze data and review General Troubleshooting Information (see page 14-8) before you troubleshoot.
- This code is caused by an electrical circuit problem and cannot be caused by a mechanical problem in the transmission.

1. Clear the DTC with the HDS.

2. Raise the front of the vehicle, make sure it is securely supported, and allow the front wheels to rotate freely.

3. Start the engine, drive the vehicle in the D position until the vehicle speed reaches 35 mph (56 km/h), then slow down and stop the wheels.

4. Monitor the OBD status for P0706 in the DTCs/ Freeze Data in A/T Mode Menu for a pass/fail.

   Does the result indicate a failed?

   YES—Go to step 5.

   NO—Intermittent failure, the system is OK at this time. Check for poor connections or loose terminals at the transmission range switch and PCM. If the tester indicates NOT COMPLETED, return to step 1 and recheck. ■

5. Test the transmission range switch (see page 14-306).

   Is the switch OK?

   YES—Inspect the end of the selector control shaft (see step 6 on page 14-308), and go to step 6.

   NO—Replace the transmission range switch, then go to step 24.

6. Install the transmission range switch correctly, and adjust the shift cable (see page 14-299).

7. Clear the DTC with the HDS.

8. Raise the front of the vehicle, make sure it is securely supported, and allow the front wheels to rotate freely.

9. Start the engine, drive the vehicle in the D position until the vehicle speed reaches 35 mph (56 km/h), then slow down and stop the wheels.

10. Monitor the OBD status for P0706 in the DTCs/ Freeze Data in A/T Mode Menu for a pass/fail.

    Does the result indicate a failed?

    YES—Go to step 11.

    NO—The problem has been corrected. If the tester indicates NOT COMPLETED, return to step 7 and recheck. ■

11. Shift the shift lever into the D position, and verify the ATP FWD and ATP D inputs with the HDS in the A/T data list.

    Is the ATP FWD and ATP D ON?

    YES—Go to step 12.

    NO—Go to step 17.

12. Shift to the D3 position, and verify the ATP FWD and ATP D3 inputs with the HDS in the A/T date list.

    Is the ATP FWD and ATP D3 ON?

    YES—Go to step 13.

    NO—Go to step 17.

13. Clear the DTC with the HDS, and turn the ignition switch OFF.

14. Raise the front of the vehicle, make sure it is securely supported, and allow the front wheels to rotate freely.

15. Start the engine, drive the vehicle in the D position until the vehicle speed reaches 35 mph (56 km/h), then slow down and stop the wheels.

(cont'd)

DTC Troubleshooting (cont'd)

16. Monitor the OBD status for P0706 in the DTCs/ Freeze Data in A/T Mode Menu for a pass/fail.

    Does the result indicate a failed?

    YES—Go to step 17.

    NO—Intermittent failure, the system is OK at this time. Check for poor connections or loose terminals at the transmission range switch and PCM. If the tester indicates NOT COMPLETED, return to step 13 and recheck. ■

17. Turn the ignition switch OFF.

18. Disconnect the transmission range switch connector.

19. Check for continuity between transmission range switch connector terminal No. 10 and body ground.

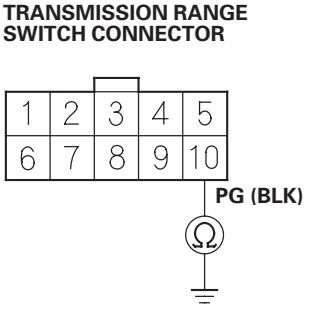

Wire side of female terminals

Is there continuity?

YES—Go to step 20.

NO—Repair open in the wire between transmission range switch connector terminal No. 10 and ground (G101), or repair poor ground (G101), then go to step 24.

20. Turn the ignition switch ON (II).

21. Measure the voltage between transmission range switch connector terminals No. 5 and No. 10.

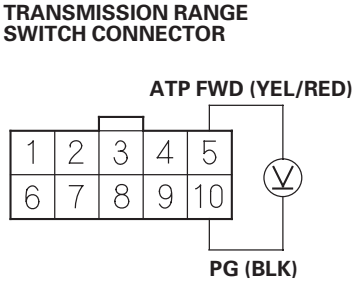

Wire side of female terminals

Is there battery voltage?

YES—Go to step 22.

NO—Repair open in the wire between the transmission range switch and PCM connector terminal C18, then go to step 24.

22. Measure the voltage between transmission range switch connector terminals No. 8 and No. 10.

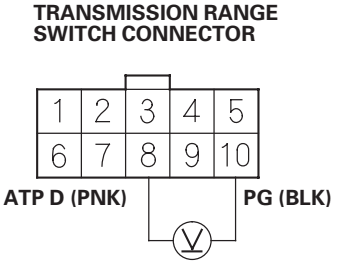

Wire side of female terminals

Is there battery voltage?

YES—Go to step 23.

NO—Repair open in the wire between the transmission range switch and PCM connector terminal C17, then go to step 24.

23. Measure the voltage between transmission range switch connector terminals No. 3 and No. 10.

TRANSMISSION RANGE SWITCH CONNECTOR

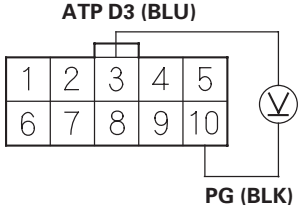

Wire side of female terminals

Is there battery voltage?

YES—Update the PCM if it does not have the latest software, or substitute a known-good PCM (see page 14-11), then recheck. If the symptom/indication goes away with a known-good PCM, replace the original PCM. ■

NO—Repair open in the wire between the transmission range switch and PCM connector terminal C9, then go to step 24.

24. Clear the DTC with the HDS, and turn the ignition switch OFF.

25. Raise the front of the vehicle, make sure it is securely supported, and allow the front wheels to rotate freely.

26. Start the engine, drive the vehicle in the D position until the vehicle speed reaches 35 mph (56 km/h), then slow down and stop the wheels.

27. Monitor the OBD status for P0706 in the DTCs/Freeze Data in A/T Mode Menu for a pass/fail.

    Does the result indicate a passed?

    YES—Troubleshooting is completed. ■

    NO—Return to step 1 and recheck.

DTC Troubleshooting (cont'd)

DTC P0711: Problem in ATF Temperature Sensor Circuit

2005-2006 Models

NOTE:
- Record all freeze data and review General Troubleshooting Information (see page 14-8) before you troubleshoot.
- This code is caused by an electrical circuit problem and cannot be caused by a mechanical problem in the transmission.

1. Check the ATF temperature with the HDS.

   Does the ATF temperature exceed the ambient-air temperature?

   YES—Record the ATF temperature. Leave the engine off for more than 30 minutes, and go to step 2.

   NO—Record the ATF temperature. Test the stall speed RPM (see page 14-253) three times. Go to step 2 after stall speed testing.

2. Check the ATF temperature with the HDS.

   Did the ATF temperature change?

   YES—Leave the engine off for at least 30 more minutes, and go to step 3.

   NO—Replace ATF temperature sensor (see page 14-268), then go to step 5.

3. Check the ECT SENSOR with the HDS.

   Is the ECT SENSOR equal to the ambient-air temperature?

   YES—Go to step 4.

   NO—Leave the engine off until ECT sensor equals ambient-air temperature, then go to step 4.

4. Check the ATF temperature with the HDS.

   Is the ATF temperature almost equal to ECT SENSOR?

   YES—Intermittent failure, the system is OK at this time. Check for poor connections or loose terminals at the ATF temperature sensor and PCM. ■

   NO—Replace ATF temperature sensor (see page 14-268), then go to step 5.

5. Clear the DTC with the HDS.

6. Test-drive the vehicle for several minutes in the D position through all five gears.

7. Monitor the OBD status for P0711 in the DTCs/ Freeze Data in A/T Mode Menu for a pass/fail.

   Does the result indicate a passed?

   YES—Troubleshooting is completed. ■

   NO—Return to step 1 and recheck.

DTC P0712: Short in ATF Temperature Sensor Circuit

2005-2006 Models

NOTE:
- Record all freeze data and review General Troubleshooting Information (see page 14-8) before you troubleshoot.
- This code is caused by an electrical circuit problem and cannot be caused by a mechanical problem in the transmission.

1. Check ATF temperature sensor voltage with the HDS in the A/T data list.

   Is ATF temperature sensor voltage 0.07 V or less?

   YES—Go to step 2.

   NO—Intermittent failure, the system is OK at this time. Check for intermittent short in the wires between the ATF temperature sensor and PCM. ■

2. Disconnect the shift solenoid harness connector at the shift solenoid valve cover.

3. Check ATF temperature sensor voltage with the HDS in the A/T data list.

   Is ATF temperature sensor voltage 0.07 V or less?

   YES—Go to step 4.

   NO—Check for a short to ground in the shift solenoid harness wire in the transmission (see page 14-268). If the wire is OK, replace ATF temperature sensor (see page 14-268), then go to step 8.

4. Turn the ignition switch OFF.

5. Jump the SCS line with the HDS.

6. Disconnect PCM connector C (22P).

7. Check for continuity between the shift solenoid harness connector terminal No. 6 and body ground.

SHIFT SOLENOID HARNESS CONNECTOR

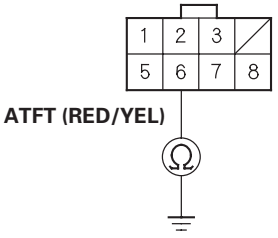

Wire side of female terminals

   Is there continuity?

   YES—Repair short to ground in the wire between PCM connector terminal C14 and the shift solenoid harness connector, then go to step 8.

   NO—Update the PCM if it does not have the latest software, or substitute a known-good PCM (see page 14-11), then recheck. If the symptom/indication goes away with a known-good PCM, replace the original PCM. ■

8. Clear the DTC with the HDS.

9. Test-drive the vehicle for several minutes in the D position through all five gears.

10. Monitor the OBD status for P0712 in the DTCs/Freeze Data in A/T Mode Menu for a pass/fail.

    Does the result indicate a passed?

    YES—Troubleshooting is completed. ■

    NO—Return to step 1 and recheck.

DTC Troubleshooting (cont'd)

DTC P0713: Open in ATF Temperature Sensor Circuit

2005-2006 Models

NOTE:
- Record all freeze data and review General Troubleshooting Information (see page 14-8) before you troubleshoot.
- This code is caused by an electrical circuit problem and cannot be caused by a mechanical problem in the transmission.

1. Check ATF temperature sensor voltage with the HDS in the A/T data list.

   Does ATF temperature sensor voltage exceed 4.93 V?

   YES—Go to step 2.

   NO—Intermittent failure, the system is OK at this time. Check for poor connections or loose terminals at the ATF temperature sensor and PCM.■

2. Turn the ignition switch OFF.

3. Disconnect the shift solenoid harness connector.

4. Turn the ignition switch ON (II).

5. Measure the voltage between shift solenoid harness connector terminal No. 6 and body ground.

SHIFT SOLENOID HARNESS CONNECTOR

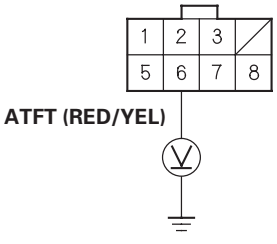

Wire side of female terminals

Is there about 5 V?

YES—Go to step 6.

NO—Go to step 7.

6. Measure the voltage between shift solenoid harness connector terminals No. 6 and No. 7.

SHIFT SOLENOID HARNESS CONNECTOR

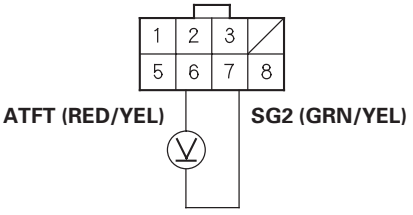

Wire side of female terminals

Is there about 5 V?

YES—Check the ATF temperature sensor and shift solenoid harness in the transmission housing (see page 14-268).■

NO—Repair open in the wire between PCM connector terminal A23 and the shift solenoid harness connector, then go to step 8.

7. Measure the voltage between PCM connector terminal C14 and body ground.

PCM CONNECTOR C (22P)

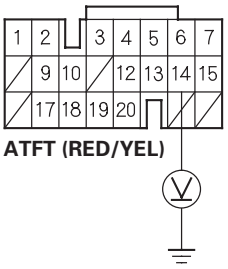

Wire side of female terminals

Is there about 5 V?

YES—Repair open in the wire between PCM connector terminal C14 and the shift solenoid harness connector, then go to step 8.

NO—Check for loose or poor connections at PCM connector terminal C14. If the connection is OK, update the PCM if it does not have the latest software, or substitute a known-good PCM (see page 14-11), then recheck. If the symptom/indication goes away with a known-good PCM, replace the original PCM. ■

8. Clear the DTC with the HDS.

9. Test-drive the vehicle for several minutes in the D position through all five gears.

10. Monitor the OBD status for P0713 in the DTCs/Freeze Data in A/T Mode Menu for a pass/fail.

    Does the result indicate a passed?

    YES—Troubleshooting is completed. ■

    NO—Return to step 1 and recheck.

DTC Troubleshooting (cont'd)

DTC P0716: Problem in Input Shaft (Mainshaft) Speed Sensor Circuit

2005-2006 Models

NOTE:
- Record all freeze data and review General Troubleshooting Information (see page 14-8) before you troubleshoot.
- This code is caused by an electrical circuit problem and cannot be caused by a mechanical problem in the transmission.

1. Clear the DTC with the HDS.

2. Check for proper input shaft (mainshaft) speed sensor installation (see page 14-266).

3. Raise the front of the vehicle, make sure it is securely supported, and allow the front wheels to rotate freely.

4. Start the engine, drive the vehicle in the D position, and hold the vehicle at speeds over 30 mph (48 km/h) for more than 10 seconds. Slow down and stop the wheels.

5. Monitor the OBD status for P0716 in the DTCs/ Freeze Data in A/T Mode Menu for a pass/fail.

   Does the result indicate a failed?

   YES—Go to step 6.

   NO—Intermittent failure, the system is OK at this time. Check for loose or poor connections at PCM and input shaft (mainshaft) speed sensor. If the tester indicates NOT COMPLETED, return to step 4 and recheck. ■

6. Turn the ignition switch OFF.

7. Jump the SCS line with the HDS.

8. Disconnect PCM connector A (31P) and input shaft (mainshaft) speed sensor connector.

9. Check for continuity between PCM connector terminals A8 and body ground, and between A9 and body ground.

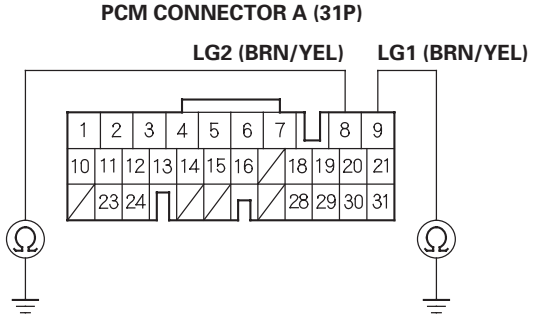

   Is there continuity?

   YES—Go to step 10.

   NO—Repair open in the wires between PCM connector terminals A8, A9, and ground (G101), or repair poor ground (G101), then go to step 29.

10. Connect PCM connector A (31P).

11. Turn the ignition switch ON (II).

12. Measure the voltage between input shaft (mainshaft) speed sensor connector terminal No. 1 and body ground.

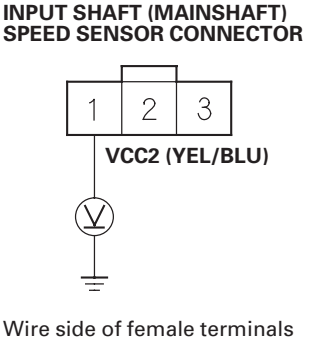

   Is there about 5 V?

   YES—Go to step 13.

   NO—Go to step 24.

13. Turn the ignition switch OFF.

14. Disconnect PCM connector C (22P).

15. Check for continuity between input shaft (mainshaft) speed sensor connector terminal No. 2 and body ground.

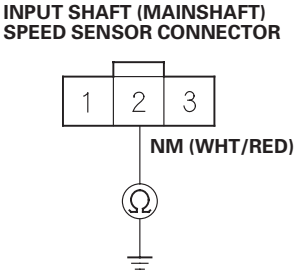

Wire side of female terminals

Is there continuity?

YES—Repair short to ground in the wire between PCM connector terminal C19 and input shaft (mainshaft) speed sensor, then go to step 31.

NO—Go to step 16.

16. Disconnect the PCM connector A (31P).

17. Check for continuity between PCM connector terminal A23 and input shaft (mainshaft) speed sensor connector terminal No. 3.

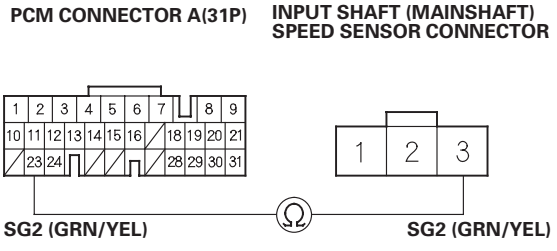

Wire side of female terminals

Is there continuity?

YES—Go to step 18.

NO—Repair open in the wire between the connector terminal A23 and input shaft (mainshaft) speed sensor connector, then go to step 31.

18. Connect PCM connectors A (31P) and C (22P).

19. Turn the ignition switch ON (II).

20. Measure the voltage between input shaft (mainshaft) speed sensor connector terminals No. 2 and No. 3.

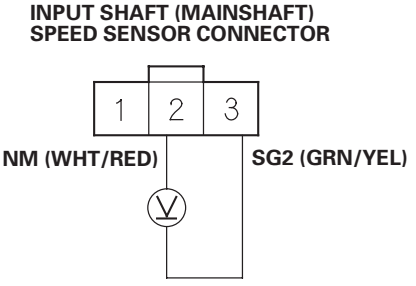

Wire side of female terminals

Is there about 5 V?

YES—Go to step 21.

NO—Go to step 30.

21. Connect the input shaft (mainshaft) speed sensor connector.

22. Measure the voltage between PCM connector terminals C19 and A9.

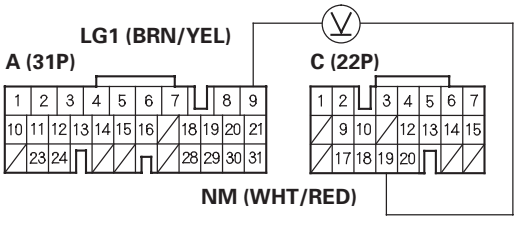

Wire side of female terminals

Is there 0 V or about 5 V?

YES—Go to step 23.

NO—Replace the input shaft (mainshaft) speed sensor (see page 14-266), then go to step 31.

(cont'd)

DTC Troubleshooting (cont'd)

23. Shift to the P position. Start the engine, and let it idle.

24. With the engine idling, measure the voltage between PCM connector terminals C19 and A9.

PCM CONNECTORS

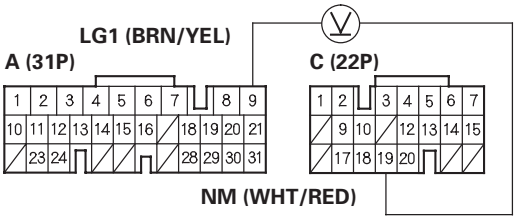

Wire side of female terminals

Is there 1.5 V – 3.5 V?

YES—Update the PCM if it does not have the latest software, or substitute a known-good PCM (see page 14-11), then recheck. If the symptom/indication goes away with a known-good PCM, replace the original PCM. ■

NO—Replace the input shaft (mainshaft) speed sensor (see page 14-266), then go to step 31.

25. Measure the voltage between PCM connector terminals A20 and A9.

PCM CONNECTOR A (31P)

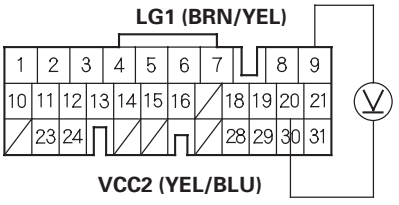

Wire side of female terminals

Is there about 5 V?

YES—Repair open in the wire between PCM connector terminal A20 and the input shaft (mainshaft) speed sensor connector, then go to step 31.

NO—Go to step 26.

26. Turn the ignition switch OFF.

27. Jump the SCS line with the HDS.

28. Disconnect PCM connector A (31P).

29. Check for continuity between PCM connector terminal A20 and body ground.

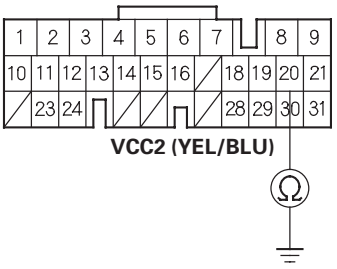

Wire side of female terminals

Is there continuity?

YES—Repair short to ground in the wire between PCM connector terminal A20 and the input shaft (mainshaft) speed sensor connector, then go to step 31.

NO—Check for loose or poor connections at PCM connector terminal A20. If the connection is OK, update the PCM if it does not have the latest software, or substitute a known-good PCM (see page 14-11), then recheck. If the symptom/indication goes away with a known-good PCM, replace the original PCM. ■

30. Measure the voltage between PCM connector terminals C19 and A9.

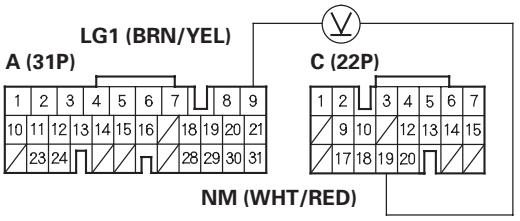

Wire side of female terminals

Is there about 5 V?

YES—Repair open in the wire between PCM connector terminal C19 and the input shaft (mainshaft) speed sensor connector, then go to step 31.

NO—Check for loose or poor connections at PCM connector terminal C19. If the connection is OK, update the PCM if it does not have the latest software, or substitute a known-good PCM (see page 14-11), then recheck. If the symptom/indication goes away with a known-good PCM, replace the original PCM. ■

31. Clear the DTC with the HDS.

32. Start the engine, drive the vehicle in the D position, and hold the vehicle at speeds over 30 mph (48 km/h) for more than 10 seconds.

33. Monitor the OBD status for P0716 in the DTCs/Freeze Data in A/T Mode Menu for a pass/fail.

Does the result indicate a passed?

YES—Troubleshooting is completed. ■

NO—Return to step 1 and recheck.

DTC Troubleshooting (cont'd)

DTC P0717: Problem in Input Shaft (Mainshaft) Speed Sensor Circuit (No Signal Input)

2005-2006 Models

NOTE:
- Record all freeze data and review General Troubleshooting Information (see page 14-8) before you troubleshoot.
- This code is caused by an electrical circuit problem and cannot be caused by a mechanical problem in the transmission.

1. Clear the DTC with the HDS.

2. Check for proper input shaft (mainshaft) speed sensor installation (see page 14-266).

3. Raise the front of the vehicle, make sure it is securely supported, and allow the front wheels to rotate freely.

4. Start the engine, drive the vehicle in the D position, and hold the vehicle at speeds over 30 mph (48 km/h) for more than 10 seconds. Slow down and stop the wheels.

5. Moniter the OBD status for P0717 in the DTCs/ Freeze Data in A/T Mode Menu for a pass/fail.

   Does the result indicate a failed?

   YES—Go to step 6.

   NO—Intermittent failure, the system is OK at this time. Check for loose or poor connections at the PCM and input shaft (mainshaft) speed sensor. If the tester indicates NOT COMPLETED, return to step 4 and recheck. ■

6. Turn the ignition switch OFF.

7. Jump the SCS line with the HDS.

8. Disconnect PCM connector A (31P) and input shaft (mainshaft) speed sensor connector.

9. Check for continuity between PCM connector terminals A8 and body ground, and between A9 and body ground.

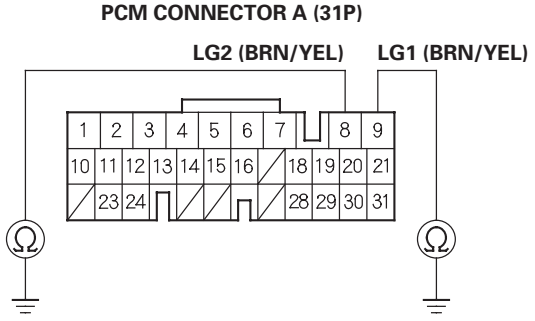

   Is there continuity?

   YES—Go to step 10.

   NO—Repair open in the wires between PCM connector terminals A8, A9, and ground (G101), or repair poor ground (G101), then go to step 30.

10. Connect PCM connector A (31P).

11. Turn the ignition switch ON (II).

12. Measure the voltage between input shaft (mainshaft) speed sensor connector terminal No. 1 and body ground.

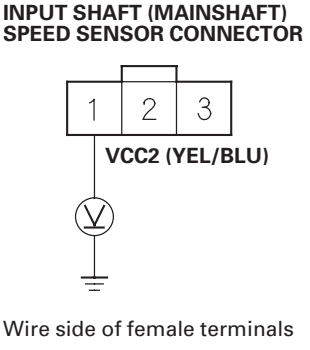

   Is there about 5 V?

   YES—Go to step 13.

   NO—Go to step 25.

13. Turn the ignition switch OFF.

14. Disconnect PCM connector C (22P).

15. Check for continuity between input shaft (mainshaft) speed sensor connector terminal No. 2 and body ground.

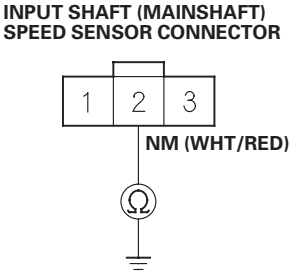

Wire side of female terminals

Is there continuity?

YES—Repair short to ground in the wire between PCM connector terminal C19 and input shaft (mainshaft) speed sensor, then go to step 31.

NO—Go to step 16.

16. Disconnect PCM connector A (31P).

17. Check for continuity between PCM connector terminal A23 and input shaft (mainshaft) speed sensor connector terminal No. 3.

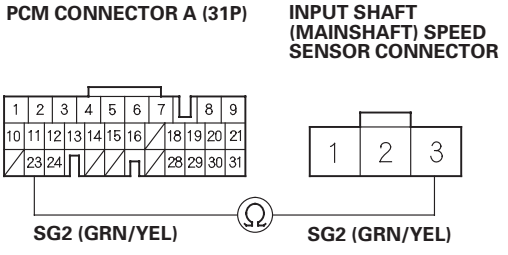

Wire side of female terminals

Is there continuity?

YES—Go to step 18.

NO—Repair open in the wire between the connector terminal A23 and input shaft (mainshaft) speed sensor connector, then go to step 31.

18. Connect PCM connectors A (31P) and C (22P).

19. Turn the ignition switch ON (II).

20. Measure the voltage between input shaft (mainshaft) speed sensor connector terminals No. 2 and No. 3.

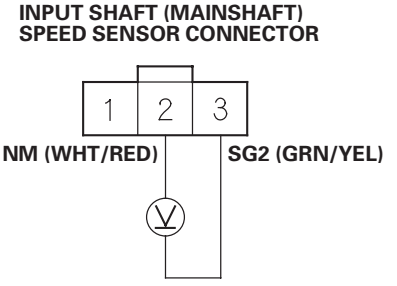

Wire side of female terminals

Is there about 5 V?

YES—Go to step 21.

NO—Go to step 30.

21. Connect the input shaft (mainshaft) speed sensor connector.

22. Measure the voltage between PCM connector terminals C19 and A9.

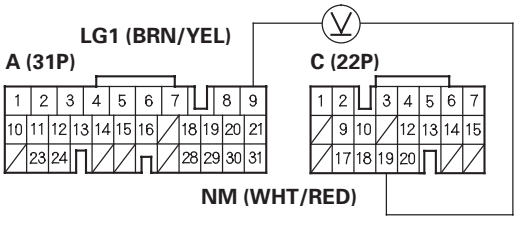

Wire side of female terminals

Is there 0 V or about 5 V?

YES—Go to step 23.

NO—Replace the input shaft (mainshaft) speed sensor (see page 14-266), then go to step 31.

(cont'd)

DTC Troubleshooting (cont'd)

23. Shift to the P position. Start the engine, and let it idle.

24. With the engine idling, measure the voltage between PCM connector terminals C19 and A9.

PCM CONNECTORS

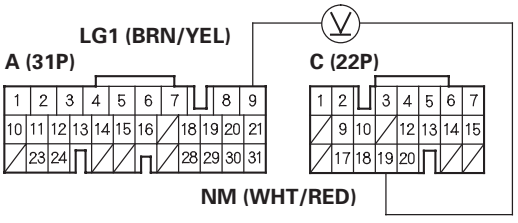

Wire side of female terminals

Is there 1.5 V – 3.5 V?

YES—Update the PCM if it does not have the latest software, or substitute a known-good PCM (see page 14-11), then recheck. If the symptom/indication goes away with a known-good PCM, replace the original PCM. ■

NO—Replace the input shaft (mainshaft) speed sensor (see page 14-266), then go to step 31.

25. Measure the voltage between PCM connector terminals A20 and A9.

PCM CONNECTOR A (31P)

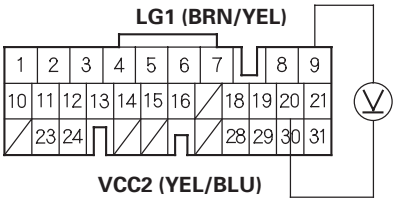

Wire side of female terminals

Is there about 5 V?

YES—Repair open in the wire between PCM connector terminal A20 and the input shaft (mainshaft) speed sensor connector, then go to step 31.

NO—Go to step 26.

26. Turn the ignition switch OFF.

27. Jump the SCS line with the HDS.

28. Disconnect PCM connector A (31P).

29. Check for continuity between PCM connector terminal A20 and body ground.

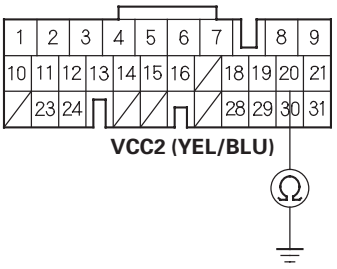

Wire side of female terminals

Is there continuity?

YES—Repair short to ground in the wire between PCM connector terminal A20 and the input shaft (mainshaft) speed sensor connector, then go to step 31.

NO—Check for loose or poor connections at PCM connector terminal A20. If the connection is OK, update the PCM if it does not have the latest software, or substitute a known-good PCM (see page 14-11), then recheck. If the symptom/indication goes away with a known-good PCM, replace the original PCM. ■

30. Measure the voltage between PCM connector terminals C19 and A9.

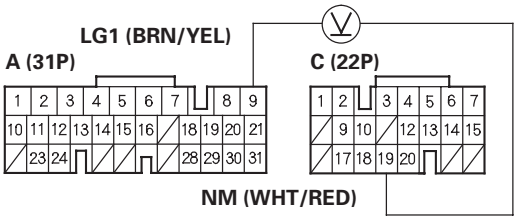

Wire side of female terminals

Is there about 5 V?

YES—Repair open in the wire between PCM connector terminal C19 and the input shaft (mainshaft) speed sensor connector, then go to step 31.

NO—Check for loose or poor connections at PCM connector terminal C19. If the connection is OK, update the PCM if it does not have the latest software, or substitute a known-good PCM (see page 14-11), then recheck. If the symptom/indication goes away with a known-good PCM, replace the original PCM. ■

31. Clear the DTC with the HDS.

32. Start the engine, drive the vehicle in the D position, and hold the vehicle at speeds over 30 mph (48 km/h) for more than 10 seconds.

33. Monitor the OBD status for P0717 in the DTCs/Freeze Data in A/T Mode Menu for a pass/fail.

Does the result indicate a passed?

YES—Troubleshooting is completed. ■

NO—Return to step 1 and recheck.

DTC Troubleshooting (cont'd)

DTC P0718: Input Shaft (Mainshaft) Speed Sensor Intermittent Failure

2005-2006 Models

NOTE:
- Record all freeze data and review General Troubleshooting Information (see page 14-8) before you troubleshoot.
- This code is caused by an electrical circuit problem and cannot be caused by a mechanical problem in the transmission.

1. Clear the DTC with the HDS.

2. Test-drive the vehicle for several minutes in the D position through all five gears.

3. Monitor the OBD status for P0718 in the DTCs/ Freeze Data in A/T Mode Menu for a pass/fail.

   Does the result indicate a failed?

   YES—Go to step 4.

   NO—Intermittent failure, the system is OK at this time. Check for poor connections or loose terminals at the input shaft (mainshaft) speed sensor and PCM. If the tester indicates NOT COMPLETED, return to step 2 and recheck. ■

4. Turn the ignition switch OFF.

5. Disconnect the input shaft (mainshaft) speed sensor connector, and inspect the connector and connector terminals to be sure they are making good contact.

   Are the connector terminals OK?

   YES—Go to step 6.

   NO—Repair the connector terminals, then go to step 6.

6. Connect the input shaft (mainshaft) speed sensor connector.

7. Test-drive the vehicle for several minutes, and monitor the OBD status for P0718 in the DTCs/ Freeze Data in A/T Mode Menu for a pass/fail.

   Does the result indicate a failed?

   YES—Go to step 8.

   NO—The problem has been corrected. If the tester indicates NOT COMPLETED, return to step 7 and recheck. ■

8. Turn the ignition switch OFF.

9. Jump the SCS line with the HDS.

10. Disconnect PCM connector C (22P).

11. Disconnect the input shaft (mainshaft) speed sensor connector.

12. Check for continuity between input shaft (mainshaft) speed sensor connector terminal No. 2 and body ground.

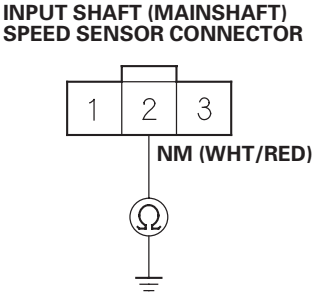

Wire side of female terminals

   Is there continuity?

   YES—Repair short to ground in the wire between PCM connector terminal C19 and the input shaft (mainshaft) speed sensor connector, then go to step 19.

   NO—Go to step 13.

13. Connect PCM connector C (22P).

14. Turn the ignition switch ON (II).

15. Measure the voltage between input shaft (mainshaft) speed sensor connector terminal No. 2 and body ground.

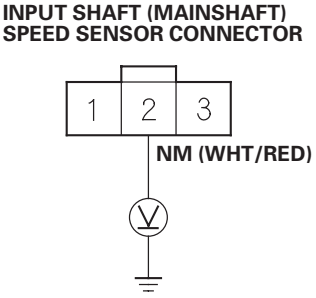

Wire side of female terminals

Is there about 5 V?

YES—Replace the input shaft (mainshaft) speed sensor (see page 14-266), then go to step 19.

NO—Go to step 16.

16. Turn the ignition switch OFF.

17. Disconnect PCM connector C (22P).

18. Check for continuity between PCM connector terminal C19 and input shaft (mainshaft) speed sensor connector terminal No. 2.

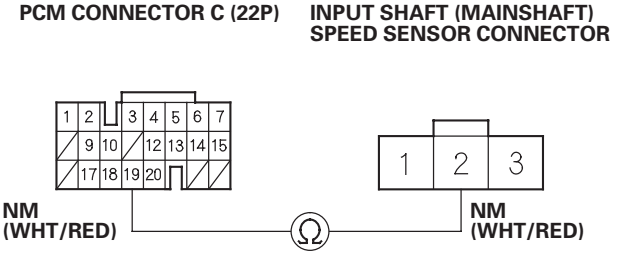

Wire side of female terminals

Is there continuity?

YES—Update the PCM if it does not have the latest software, or substitute a known-good PCM (see page 14-11), then recheck. If the symptom/indication goes away with a known-good PCM, replace the original PCM. ■

NO—Repair open in the wire between PCM connector terminal C19 and the input shaft (mainshaft) speed sensor, then go to step 19.

19. Clear the DTC with the HDS.

20. Test-drive the vehicle for several minutes in the D position through all five gears.

21. Monitor the OBD status for P0718 in the DTCs/Freeze Data in A/T Mode Menu for a pass/fail.

Does the result indicate a passed?

YES—Troubleshooting is completed. ■

NO—Return to step 1 and recheck.

DTC Troubleshooting (cont'd)

DTC P0721: Problem in Output Shaft (Countershaft) Speed Sensor Circuit

2005-2006 Models

NOTE:
- Record all freeze data and review General Troubleshooting Information (see page 14-8) before you troubleshoot.
- This code is caused by an electrical circuit problem and cannot be caused by a mechanical problem in the transmission.

1. Clear the DTC with the HDS.

2. Raise the front of the vehicle, make sure it is securely supported, and allow the front wheels to rotate freely.

3. Start the engine, run the vehicle in the D position with engine speed 2,000 rpm or higher for more than 10 seconds. Slow down and stop the wheels.

4. Monitor the OBD status for P0721 in the DTCs/ Freeze Data in A/T Mode Menu for a pass/fail.

   Does the result indicate a failed?

   YES—Go to step 5.

   NO—Intermittent failure, the system is OK at this time. Check for poor connections or loose terminals at the output shaft (countershaft) speed sensor and PCM. If the tester indicates NOT COMPLETED, return to step 3 and recheck. ■

5. Turn the ignition switch OFF.

6. Jump the SCS line with the HDS.

7. Disconnect PCM connector A (31P) and output shaft (countershaft) speed sensor connector.

8. Check for continuity between PCM connector terminals A8 and body ground, and between A9 and body ground.

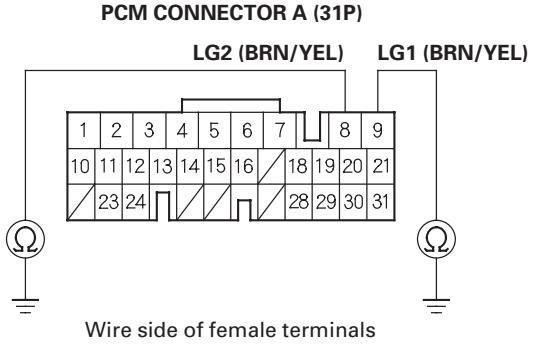

   Is there continuity?

   YES—Go to step 9.

   NO—Repair open in the wire between PCM connector terminals A8, A9, and ground (G101), or repair poor ground (G101), then go to step 27.

9. Connect PCM connector A (31P).

10. Turn the ignition switch ON (II).

11. Measure the voltage between output shaft (countershaft) speed sensor connector terminal No. 1 and body ground.

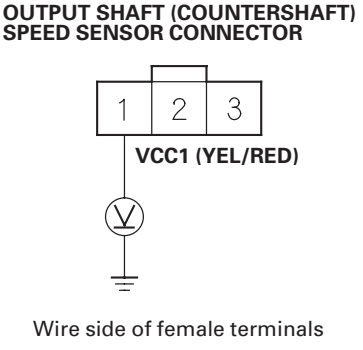

   Is there about 5 V?

   YES—Go to step 12.

   NO—Go to step 23.

12. Turn the ignition switch OFF.

13. Disconnect PCM connector A (31P).

14. Check for continuity between output shaft (countershaft) speed sensor connector terminal No. 2 and body ground.

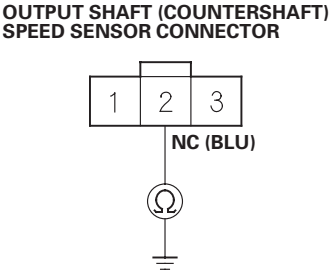

Wire side of female terminals

Is there continuity?

YES—Repair short to ground in the wire between PCM connector terminal A18 and the output shaft (countershaft) speed sensor, then go to step 28.

NO—Go to step 15.

15. Check for continuity between PCM connector terminal A24 and output shaft (countershaft) speed sensor connector terminal No. 3.

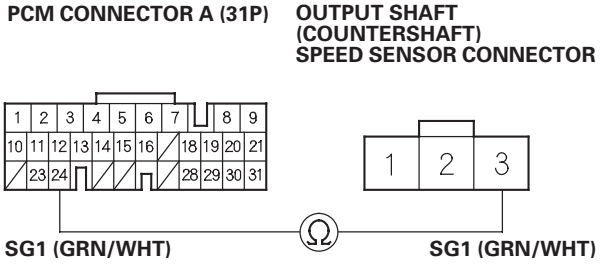

Wire side of female terminals

Is there continuity?

YES—Go to step 16.

NO—Repair open in the wire between PCM connector terminal A24 and output shaft (countershaft) speed sensor connector, then go to step 28.

16. Connect PCM connector A (31P).

17. Turn the ignition switch ON (II).

18. Measure the voltage between output shaft (countershaft) speed sensor connector terminals No. 2 and No. 3.

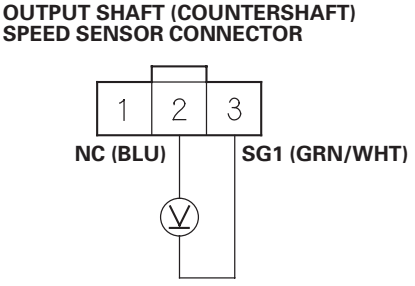

Wire side of female terminals

Is there about 5 V?

YES—Go to step 19.

NO—Go to step 27.

19. Connect output shaft (countershaft) speed sensor connector.

20. Measure the voltage between PCM connector terminals A18 and A9.

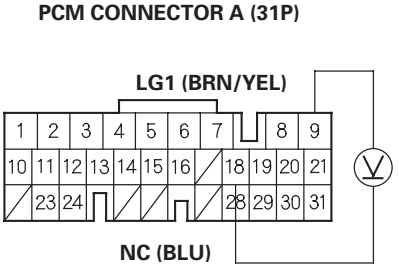

Wire side of female terminals

Is there 0 V or about 5 V?

YES—Go to step 21.

NO—Replace the output shaft (countershaft) speed sensor (see page 14-266), then go to step 28.

(cont'd)

DTC Troubleshooting (cont'd)

21. Shift to the P position. Start the engine, and let it idle.

22. Shift to the D position, and measure the voltage between PCM connector terminals A18 and A9.

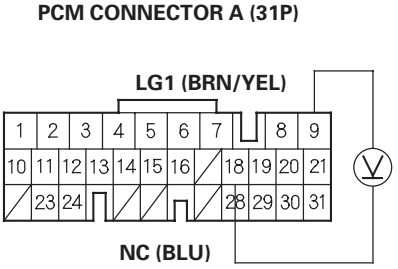

Wire side of female terminals

Is there 1.5 V – 3.5 V?

YES—Update the PCM if it does not have the latest software, or substitute a known-good PCM (see page 14-11), then recheck. If the symptom/indication goes away with a known-good PCM, replace the original PCM. ■

NO—Replace the output shaft (countershaft) speed sensor (see page 14-266), then go to step 28.

23. Measure the voltage between PCM connector terminals A21 and A9.

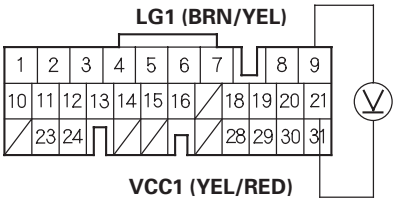

Wire side of female terminals

Is there about 5 V?

YES—Repair open in the wire between PCM connector A21 and the output shaft (countershaft) speed sensor, then go to step 28.

NO—Go to step 24.

24. Turn the ignition switch OFF.

25. Disconnect PCM connector A (31P).

26. Check for continuity between PCM connector terminal A21 and body ground.

PCM CONNECTOR A (31P)

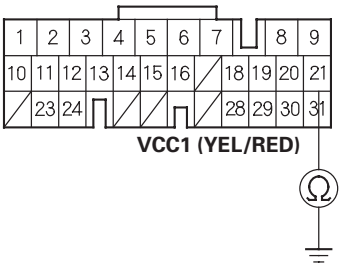

Wire side of female terminals

Is there continuity?

YES—Repair short to ground in the wire between PCM connector terminal A21 and the output shaft (countershaft) speed sensor, then go to step 28.

NO—Check for loose or poor connections at PCM connector terminal A21. If the connection is OK, update the PCM if it does not have the latest software, or substitute a known-good PCM (see page 14-11), then recheck. If the symptom/indication goes away with a known-good PCM, replace the original PCM. ■

27. Measure the voltage between PCM connector terminals A18 and A9.

PCM CONNECTOR A (31P)

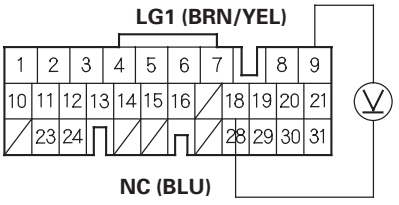

Wire side of female terminals

Is there about 5 V?

YES—Repair open in the wire between PCM connector terminal A18 and the output shaft (countershaft) speed sensor, then go to step 28.

NO—Update the PCM if it does not have the latest software, or substitute a known-good PCM (see page 14-11), then recheck. If the symptom/indication goes away with a known-good PCM, replace the original PCM. ■

28. Clear the DTC with the HDS.

29. Start the engine, run the vehicle in the D position with engine speed 2,000 rpm or higher for more than 10 seconds. Slow down and stop the wheels.

30. Monitor the OBD status for P0721 in the DTCs/Freeze Data in A/T Mode Menu for a pass/fail.

Does the result indicate a passed?

YES—Troubleshooting is completed. ■

NO—Return to step 1 and recheck.

DTC Troubleshooting (cont'd)

DTC P0722: Problem in Output Shaft (Countershaft) Speed Sensor Circuit (No Signal Input)

2005-2006 Models

NOTE:
- Record all freeze data and review General Troubleshooting Information (see page 14-8) before you troubleshoot.
- This code is caused by an electrical circuit problem and cannot be caused by a mechanical problem in the transmission.

1. Clear the DTC with the HDS.

2. Raise the front of the vehicle, make sure it is securely supported, and allow the front wheels to rotate freely.

3. Start the engine, run the vehicle in the D position with engine speed 2,000 rpm or higher for more than 10 seconds. Slow down and stop the wheels.

4. Monitor the OBD status for P0722 in the DTCs/ Freeze Data in A/T Mode Menu for a pass/fail.

   Does the result indicate a failed?

   YES—Go to step 5.

   NO—Intermittent failure, the system is OK at this time. Check for poor connections or loose terminals at the output shaft (countershaft) speed sensor and PCM. If the tester indicates NOT COMPLETED, return to step 3 and recheck. ■

5. Turn the ignition switch OFF.

6. Jump the SCS line with the HDS.

7. Disconnect PCM connector A (31P) and output shaft (countershaft) speed sensor connector.

8. Check for continuity between PCM connector terminals A8 and body ground, and between A9 and body ground.

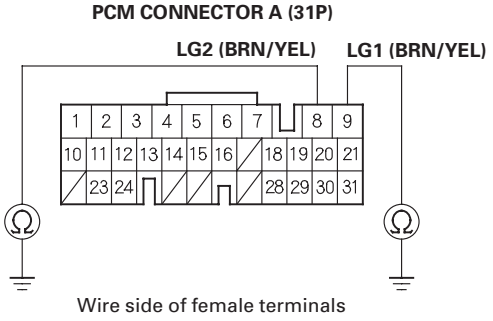

   Is there continuity?

   YES—Go to step 9.

   NO—Repair open in the wires between PCM connector terminals A8, A9, and ground (G101), or repair poor ground (G101), then go to step 29.

9. Connect PCM connector A (31P).

10. Turn the ignition switch ON (II).

11. Measure the voltage between output shaft (countershaft) speed sensor connector terminal No. 1 and body ground.

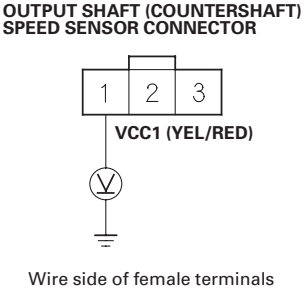

   Is there about 5 V?

   YES—Go to step 12.

   NO—Go to step 24.

12. Turn the ignition switch OFF.

13. Jump the SCS line with the HDS.

14. Disconnect PCM connector A (31P).

15. Check for continuity between output shaft (countershaft) speed sensor connector terminal No. 2 and body ground.

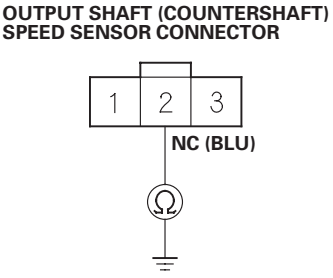

Wire side of female terminals

Is there continuity?

YES—Repair short to ground in the wire between PCM connector terminal A18 and output shaft (countershaft) speed sensor, then go to step 29.

NO—Go to step 16.

16. Check for continuity between PCM connector terminal A24 and output shaft (countershaft) speed sensor connector terminal No. 3.

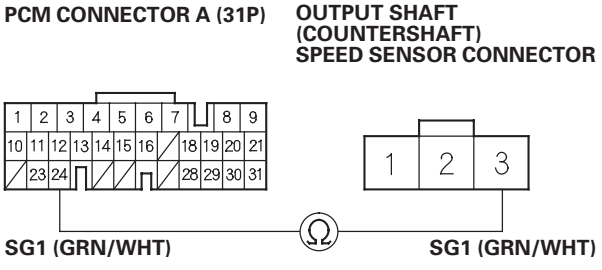

Wire side of female terminals

Is there continuity?

YES—Go to step 17.

NO—Repair open in the wire between PCM connector terminal A24 and output shaft (countershaft) speed sensor connector, then go to step 29.

17. Connect PCM connector A (31P).

18. Turn the ignition switch ON (II).

19. Measure the voltage between output shaft (countershaft) speed sensor connector terminals No. 2 and No. 3.

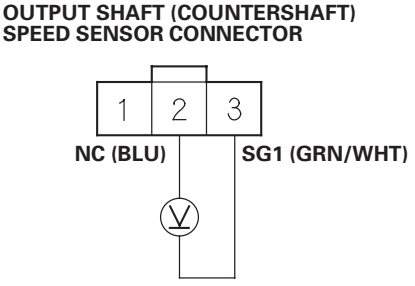

Wire side of female terminals

Is there about 5 V?

YES—Go to step 20.

NO—Go to step 28.

20. Connect the output shaft (countershaft) speed sensor connector.

21. Measure the voltage between PCM connector terminals A18 and A9.

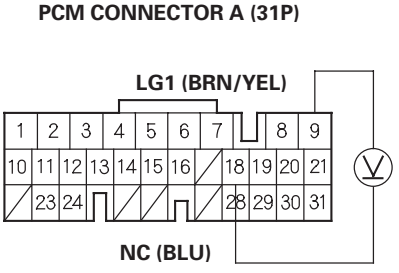

Wire side of female terminals

Is there 0 V or about 5 V?

YES—Go to step 22.

NO—Replace the output shaft (countershaft) speed sensor (see page 14-266), then go to step 29.

(cont'd)

DTC Troubleshooting (cont'd)

22. Shift to the P position. Start the engine, and let it idle.

23. Shift to the D position, and measure the voltage between PCM connector terminals A18 and A9.

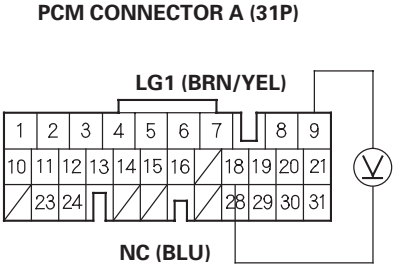

Wire side of female terminals

Is there 1.5 V – 3.5 V?

YES—Update the PCM if it does not have the latest software, or substitute a known-good PCM (see page 14-11), then recheck. If the symptom/indication goes away with a known-good PCM, replace the original PCM. ■

NO—Replace the output shaft (countershaft) speed sensor (see page 14-266), then go to step 29.

24. Measure the voltage between PCM connector terminals A21 and A9.

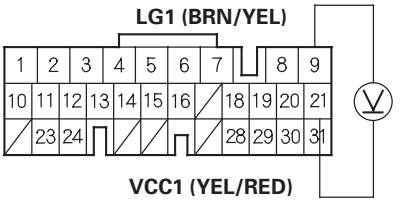

Wire side of female terminals

Is there about 5 V?

YES—Repair open in the wire between PCM connector terminal A21 and the output shaft (countershaft) speed sensor, then go to step 29.

NO—Go to step 25.

25. Turn the ignition switch OFF.

26. Disconnect PCM connector A (31P).

27. Check for continuity between PCM connector terminal A21 and body ground.

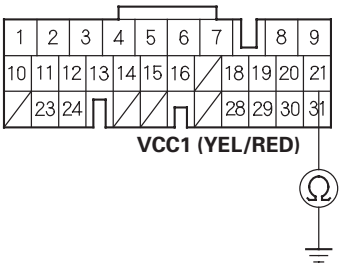

Wire side of female terminals

Is there continuity?

YES—Repair short to ground in the wire between PCM connector terminal A21 and the output shaft (countershaft) speed sensor, then go to step 29.

NO—Check for loose or poor connections at PCM connector terminal A21. If the connection is OK, update the PCM if it does not have the latest software, or substitute a known-good PCM (see page 14-11), then recheck. If the symptom/indication goes away with a known-good PCM, replace the original PCM. ■

28. Measure the voltage between PCM connector terminals A18 and A9.

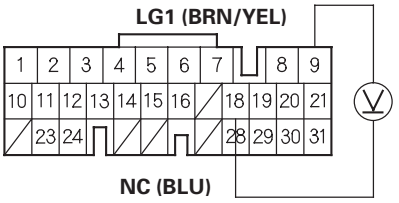

Wire side of female terminals

Is there about 5 V?

YES—Repair open in the wire between PCM connector terminal A18 and the output shaft (countershaft) speed sensor, then go to step 29.

NO—Check for loose or poor connections at PCM connector terminal A18. If the connection is OK, update the PCM if it does not have the latest software, or substitute a known-good PCM (see page 14-11), then recheck. If the symptom/indication goes away with a known-good PCM, replace the original PCM. ■

29. Clear the DTC with the HDS.

30. Start the engine, run the vehicle in the D position with the engine speed 2,000 rpm or higher for more than 10 seconds. Slow down and stop the wheels.

31. Monitor the OBD status for P0722 in the DTCs/Freeze Data in A/T Mode Menu for a pass/fail.

    Does the result indicate a passed?

    YES—Trouble shooting is completed. ■

    NO—Return to step 1 and recheck.

DTC Troubleshooting (cont'd)

DTC P0723: Output Shaft (Countershaft) Speed Sensor Intermittent Failure

2005-2006 Models

NOTE:
- Record all freeze data and review General Troubleshooting Information (see page 14-8) before you troubleshoot.
- This code is caused by an electrical circuit problem and cannot be caused by a mechanical problem in the transmission.

1. Clear the DTC with the HDS.

2. Test-drive the vehicle for 10 minutes under the same conditions as those indicated by the freeze data, and monitor the OBD status for P0723 in the DTCs/Freeze Data in A/T Mode Menu for a pass/fail.

   Does the result indicate a failed?

   YES—Go to step 3.

   NO—Intermittent failure, the system is OK at this time. Check for poor connections or loose terminals at the output shaft (countershaft) speed sensor and PCM. If the tester indicates NOT COMPLETED, return to step 2 and recheck. ■

3. Turn the ignition switch OFF.

4. Disconnect the output shaft (countershaft) speed sensor connector, and inspect the connector and connector terminals to be sure they are making good contact.

   Are the connector terminals OK?

   YES—Go to step 5.

   NO—Repair the connector terminals, then go to step 5.

5. Connect the output shaft (countershaft) speed sensor connector.

6. Test-drive the vehicle for several minutes, and monitor the OBD status for P0723 in the DTCs/Freeze Data in A/T Mode Menu for a pass/fail.

   Does the result indicate a failed?

   YES—Go to step 7.

   NO—The problem has been corrected. If the tester indicates NOT COMPLETED, return to step 6 and recheck. ■

7. Turn the ignition switch OFF.

8. Jump the SCS line with the HDS.

9. Disconnect PCM connector A (31P).

10. Disconnect the output shaft (countershaft) speed sensor connector.

11. Check for continuity between output shaft (countershaft) speed sensor connector terminal No. 2 and body ground.

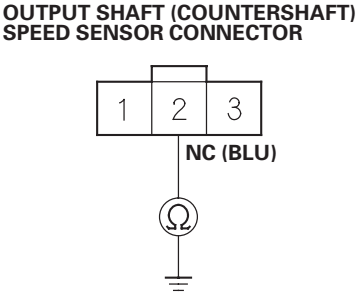

Wire side of female terminals

   Is there continuity?

   YES—Repair short to ground in the wire between PCM connector terminal A18 and the output shaft (countershaft) speed sensor, then go to step 18.

   NO—Go to step 12.

12. Connect PCM connector A (31P).

13. Turn the ignition switch ON (II).

14. Measure the voltage between output shaft (countershaft) speed sensor connector terminal No. 2 and body ground.

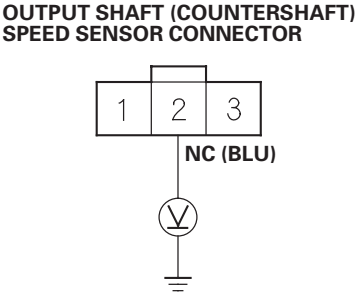

Wire side of female terminals

Is there about 5 V?

YES—Replace the output shaft (countershaft) speed sensor (see page 14-266), then go to step 18.

NO—Go to step 15.

15. Turn the ignition switch OFF.

16. Disconnect PCM connector A (31P).

17. Check for continuity between PCM connector terminal A18 and output shaft (countershaft) speed sensor connector terminal No. 2.

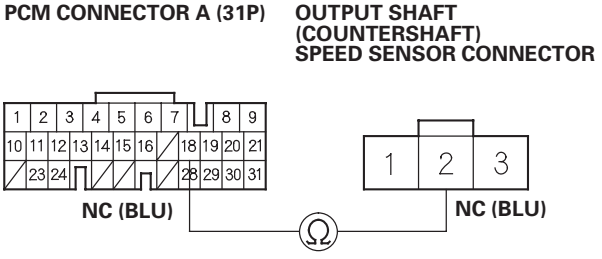

Wire side of female terminals

Is there continuity?

YES—Update the PCM if it does not have the latest software, or substitute a known-good PCM (see page 14-11), then recheck. If the symptom/indication goes away with a known-good PCM, replace the original PCM. ■

NO—Repair open in the wire between PCM connector terminal A18 and the output shaft (countershaft) speed sensor, then go to step 18.

18. Clear the DTC with the HDS.

19. Test-drive the vehicle for several minutes in the D position through all five gears.

20. Monitor the OBD status for P0723 in the DTCs/Freeze Data in A/T Mode Menu for a pass/fail.

Does the result indicate a passed?

YES—Troubleshooting is completed. ■

NO—Return to step 1 and recheck.

DTC Troubleshooting (cont'd)

DTC P0731: Problem in 1st Clutch and 1st Clutch Hydraulic Circuit

2005-2006 Models

NOTE: Record all freeze data and review General Troubleshooting Information (see page 14-8) before you troubleshoot.

1. Warm up the engine to normal operating temperature (the radiator fan comes on).

2. Make sure that the transmission is filled to the proper level, and check for fluid leaks.

3. Drain the ATF (see step 3 on page 14-272) through a strainer. Inspect the strainer for metal debris or excessive clutch material.

   Does the strainer contain metal debris or excessive clutch material?

   YES—Replace the transmission. ■

   NO—Replace the ATF (see step 4 on page 14-272) then go to step 4.

4. Measure the line pressure (see page 14-254).

   Is the line pressure within service limits?

   YES—Go to step 5.

   NO—Repair the ATF pump and regulator valve, or replace the transmission. ■

5. Measure the 1st clutch pressure (see page 14-254).

   Is the 1st clutch pressure within service limits?

   YES—Go to step 6.

   NO—Shift valves B and C are stuck. Repair these valves and hydraulic circuit, or replace the transmission. ■

6. Clear the DTC with the HDS.

7. Test-drive the vehicle for several minutes under the same conditions as those indicated by the freeze data, or drive in 1st gear in the M position at 10 mph (16 km/h) for 20 seconds.

8. Monitor the OBD status for P0731 in the DTCs/ Freeze Data in A/T Mode Menu for a pass/fail.

   Does the result indicate a failed?

   YES—Repair the 1st clutch, or replace the transmission. ■

   NO—Intermittent failure, the system is OK at this time. If the tester indicates NOT COMPLETED, return to step 7 and recheck. ■

DTC P0732: Problem in 2nd Clutch and 2nd Clutch Hydraulic Circuit

2005-2006 Models

NOTE: Record all freeze data and review General Troubleshooting Information (see page 14-8) before you troubleshoot.

1. Warm up the engine to normal operating temperature (the radiator fan comes on).

2. Make sure that the transmission is filled to the proper level, and check for fluid leaks.

3. Drain the ATF (see step 3 on page 14-272) through a strainer. Inspect the strainer for metal debris or excessive clutch material.

   Does the strainer contain metal debris or excessive clutch material?

   YES—Replace the transmission. ■

   NO—Replace the ATF (see step 4 on page 14-272) then go to step 4.

4. Measure the line pressure (see page 14-254).

   Is the line pressure within service limits?

   YES—Go to step 5.

   NO—Repair the ATF pump and regulator valve, or replace the transmission. ■

5. Measure the 2nd clutch pressure (see page 14-254).

   Is the 2nd clutch pressure within service limits?

   YES—Go to step 6.

   NO—Shift valves A and B are stuck. Repair these valves and hydraulic circuit, or replace the transmission. ■

6. Clear the DTC with the HDS.

7. Test-drive the vehicle for several minutes under the same conditions as those indicated by the freeze data, or drive in 2nd gear in the M position at 10 mph (16 km/h) for 20 seconds.

8. Monitor the OBD status for P0732 in the DTCs/ Freeze Data in A/T Mode Menu for a pass/fail.

   Does the result indicate a failed?

   YES—Repair the 2nd clutch, or replace the transmission. ■

   NO—Intermittent failure, the system is OK at this time. If the tester indicates NOT COMPLETED, return to step 7 and recheck. ■

DTC Troubleshooting (cont'd)

DTC P0733: Problem in 3rd Clutch and 3rd Clutch Hydraulic Circuit

2005-2006 Models

NOTE: Record all freeze data and review General Troubleshooting Information (see page 14-8) before you troubleshoot.

1. Warm up the engine to normal operating temperature (the radiator fan comes on).

2. Make sure that the transmission is filled to the proper level, and check for fluid leaks.

3. Drain the ATF (see step 3 on page 14-272) through a strainer. Inspect the strainer for metal debris or excessive clutch material.

   Does the strainer contain metal debris or excessive clutch material?

   YES—Replace the transmission. ■

   NO—Replace the ATF (see step 4 on page 14-272) then go to step 4.

4. Measure the line pressure (see page 14-254).

   Is the line pressure within service limits?

   YES—Go to step 5.

   NO—Repair the ATF pump and regulator valve, or replace the transmission. ■

5. Measure the 3rd clutch pressure (see page 14-254).

   Is the 3rd clutch pressure within service limits?

   YES—Go to step 6.

   NO—Shift valves A and D are stuck. Repair these valves and hydraulic circuit, or replace the transmission. ■

6. Clear the DTC with the HDS.

7. Test-drive the vehicle for several minutes under the same conditions as those indicated by the freeze data, or drive in 3rd gear in the M position at speeds over 10 mph (16 km/h) for 20 seconds.

8. Monitor the OBD status for P0733 in the DTCs/ Freeze Data in A/T Mode Menu for a pass/fail.

   Does the result indicate a failed?

   YES—Repair the 3rd clutch, or replace the transmission. ■

   NO—Intermittent failure, the system is OK at this time. If the tester indicates NOT COMPLETED, return to step 7 and recheck. ■

DTC P0734: Problem in 4th Clutch and 4th Clutch Hydraulic Circuit

2005-2006 Models

NOTE: Record all freeze data and review General Troubleshooting Information (see page 14-8) before you troubleshoot.

1. Warm up the engine to normal operating temperature (the radiator fan comes on).

2. Make sure that the transmission is filled to the proper level, and check for fluid leaks.

3. Drain the ATF (see step 3 on page 14-272) through a strainer. Inspect the strainer for metal debris or excessive clutch material.

   Does the strainer contain metal debris or excessive clutch material?

   YES—Replace the transmission. ■

   NO—Replace the ATF (see step 4 on page 14-272) then go to step 4.

4. Measure the line pressure (see page 14-254).

   Is the line pressure within service limits?

   YES—Go to step 5.

   NO—Repair the ATF pump and regulator valve, or replace the transmission. ■

5. Measure the 4th clutch pressure (see page 14-254).

   Is the 4th clutch pressure within service limits?

   YES—Go to step 6.

   NO—Shift valve B, shift valve C, servo control valve, and servo valve are stuck. Repair these valves and hydraulic circuit, or replace the transmission. ■

6. Clear the DTC with the HDS.

7. Test-drive the vehicle for several minutes under the same conditions as those indicated by the freeze data, or drive in 4th gear in the M position at speeds over 10 mph (16 km/h) for 20 seconds.

8. Monitor the OBD status for P0734 in the DTCs/ Freeze Data in A/T Mode Menu for a pass/fail.

   Does the result indicate a failed?

   YES—Repair the 4th clutch, or replace the transmission. ■

   NO—Intermittent failure, the system is OK at this time. If the tester indicates NOT COMPLETED, return to step 7 and recheck. ■

DTC Troubleshooting (cont'd)

DTC P0735: Problem in 5th Clutch and 5th Clutch Hydraulic Circuit

2005-2006 Models

NOTE: Record all freeze data and review General Troubleshooting Information (see page 14-8) before you troubleshoot.

1. Warm up the engine to normal operating temperature (the radiator fan comes on).

2. Make sure that the transmission is filled to the proper level, and check for fluid leaks.

3. Drain the ATF (see step 3 on page 14-272) through a strainer. Inspect the strainer for metal debris or excessive clutch material.

   Does the strainer contain metal debris or excessive clutch material?

   YES—Replace the transmission. ■

   NO—Replace the ATF (see step 4 on page 14-272) then go to step 4.

4. Measure the line pressure (see page 14-254).

   Is the line pressure within service limits?

   YES—Go to step 5.

   NO—Repair the ATF pump and regulator valve, or replace the transmission. ■

5. Measure the 5th clutch pressure (see page 14-254).

   Is the 5th clutch pressure within service limits?

   YES—Go to step 6.

   NO—Shift valves A, B, and/or D are stuck. Repair these valves and hydraulic circuit, or replace the transmission. ■

6. Clear the DTC with the HDS.

7. Test-drive the vehicle for several minutes under the same conditions as those indicated by the freeze data, or drive in 5th gear in the M position at speeds over 10 mph (16 km/h) for 20 seconds.

8. Monitor the OBD status for P0735 in the DTCs/ Freeze Data in A/T Mode Menu for a pass/fail.

   Does the result indicate a failed?

   YES—Repair the 5th clutch, or replace the transmission. ■

   NO—Intermittent failure, the system is OK at this time. If the tester indicates NOT COMPLETED, return to step 7 and recheck. ■

DTC P0741: Torque Converter Clutch Hydraulic Circuit Stuck OFF

2005-2006 Models

NOTE: Record all freeze data and review General Troubleshooting Information (see page 14-8) before you troubleshoot.

1. Warm up the engine to normal operating temperature (the radiator fan comes on).

2. Make sure that the transmission is filled to the proper level, and check for fluid leaks.

3. Drain the ATF (see step 3 on page 14-272) through a strainer. Inspect the strainer for metal debris or excessive clutch material.

   Does the strainer contain metal debris or excessive clutch material?

   YES—Replace the transmission. ■

   NO—Replace the ATF (see step 4 on page 14-272) then go to step 4.

4. Clear the DTC with the HDS.

5. Choose Shift Solenoid E in Miscellaneous Test Menu, and check that the shift solenoid valve E operates with the HDS.

   Is a clicking sound heard?

   YES—Go to step 6.

   NO—Replace shift solenoid valve E (see page 14-260), then go to step 10.

6. Run the engine until the engine coolant temperature reaches 176 °F (80 °C).

7. Choose Clutch Pressure Control (Linear) Solenoid A in Miscellaneous Test Menu, and test the A/T clutch pressure control solenoid valve A with the HDS.

   Is the system OK?

   YES—Go to step 8.

   NO—Follow the instructions indicated on the HDS by the tester result. Go to step 10 if any part was replaced.

8. Test-drive the vehicle at 55 mph (88 km/h) for 2 minutes while monitoring the vehicle speed with the HDS.

9. Monitor the OBD status for P0741 in the DTCs/ Freeze Data in A/T Mode Menu for a pass/fail.

   Does the result indicate a failed?

   YES—Faulty the torque converter mechanism, torque converter clutch hydraulic circuit, lock-up shift valve, or lock-up control valve, or replace the transmission. ■

   NO—Intermittent failure, the system is OK at this time. If the tester indicates NOT COMPLETED, return to step 8 and recheck. ■

10. Clear the DTC with the HDS.

11. Test-drive the vehicle for several minutes under the same conditions as those indicated by the freeze data.

12. Monitor the OBD status for P0741 in the DTCs/ Freeze Data in A/T Mode Menu for a pass/fail.

    Does the result indicate a passed?

    YES—Troubleshooting is completed. ■

    NO—Return to step 5 and recheck.

DTC Troubleshooting (cont'd)

DTC P0747: A/T Clutch Pressure Control Solenoid Valve A Stuck ON

2005-2006 Models

NOTE: Record all freeze data and review General Troubleshooting Information (see page 14-8) before you troubleshoot.

1. Warm up the engine to normal operating temperature (the radiator fan comes on).

2. Make sure that the transmission is filled to the proper level, and check for fluid leaks.

3. Drain the ATF (see step 3 on page 14-272) through a strainer. Inspect the strainer for metal debris or excessive clutch material.

   Does the strainer contain metal debris or excessive clutch material?

   YES—Replace the transmission. ■

   NO—Replace the ATF (see step 4 on page 14-272) then go to step 4.

4. Clear the DTC with the HDS.

5. Test-drive the vehicle in the D position through all five gears at speeds over 12 mph (20 km/h) for more than 20 seconds, then slow down to a stop.

6. Retest-drive the vehicle in the D position through all five gears at speeds over 12 mph (20 km/h) for more than 20 seconds, then slow down to a stop.

7. Monitor the OBD status for P0747 in the DTCs/ Freeze Data in A/T Mode Menu for a pass/fail.

   Does the result indicate a failed?

   YES—Go to step 8.

   NO—Intermittent failure, the system is OK at this time. If the tester indicates NOT COMPLETED, return to step 5 and recheck. ■

8. Clear the DTC with the HDS.

9. Choose Clutch Pressure Control (Linear) Solenoid A in Miscellaneous Test Menu, and test the A/T clutch pressure control solenoid valve A with the HDS.

   Is the system OK?

   YES—Intermittent failure, the system is OK at this time. If the tester indicates NOT COMPLETED, return to step 9 and recheck. ■

   NO—Follow the instructions indicated on the HDS by the tester result, but the tester has not determined the cause of the failure, go to step 10. If any part was replaced, go to step 11.

10. Inspect A/T clutch pressure control solenoid valve A (see page 14-262).

    Does the A/T clutch pressure control solenoid valve A work properly?

    YES—Repair hydraulic system related with shift valve B and E, or replace the transmission, then go to step 11.

    NO—Replace A/T clutch pressure control solenoid valve A (see page 14-263), then go to step 11.

11. Clear the DTC with the HDS.

12. Test-drive the vehicle in the D position through all five gears at speeds over 12 mph (20 km/h) for more than 20 seconds. Slow down to a stop.

13. Retest-drive the vehicle in the D position through all five gears at speeds over 12 mph (20 km/h) for more than 20 seconds, then slow down to a stop.

14. Monitor the OBD status for P0747 in the DTCs/ Freeze Data in A/T Mode Menu for a pass/fail.

    Does the result indicate a passed?

    YES—Troubleshooting is completed. ■

    NO—Return to step 8 and recheck.

DTC P0752: Shift Solenoid Valve A Stuck ON

2005-2006 Models

NOTE: Record all freeze data and review General Troubleshooting Information (see page 14-8) before you troubleshoot.

1. Warm up the engine to normal operating temperature (the radiator fan comes on).

2. Make sure that the transmission is filled to the proper level, and check for fluid leaks.

3. Drain the ATF (see step 3 on page 14-272) through a strainer. Inspect the strainer for metal debris or excessive clutch material.

   Does the strainer contain metal debris or excessive clutch material?

   YES—Replace the transmission. ■

   NO—Replace the ATF (see step 4 on page 14-272) then go to step 4.

4. Clear the DTC with the HDS.

5. Test-drive the vehicle in the D position through all five gears at speeds over 12 mph (20 km/h) for more than 20 seconds, then slow down to a stop.

6. Retest-drive the vehicle in the D position through all five gears at speeds over 12 mph (20 km/h) for more than 20 seconds, then slow down to a stop.

7. Monitor the OBD status for P0752 in the DTCs/ Freeze Data in A/T Mode Menu for a pass/fail.

   Does the result indicate a failed?

   YES—Go to step 8.

   NO—Intermittent failure, the system is OK at this time. If the tester indicates NOT COMPLETED, return to step 5 and recheck. ■

8. Clear the DTC with the HDS.

9. Choose Shift Solenoid A in Miscellaneous Test Menu, and check that the shift solenoid valve A operates with the HDS.

   Is a clicking sound heard?

   YES—Go to step 10.

   NO—Replace shift solenoid valve A (see page 14-260), then go to step 13.

10. Test-drive the vehicle in the D position through all five gears at speeds over 12 mph (20 km/h) for more than 20 seconds, then slow down to a stop.

11. Retest-drive the vehicle in the D position through all five gears at speeds over 12 mph (20 km/h) for more than 20 seconds, then slow down to a stop.

12. Monitor the OBD status for P0752 in the DTCs/ Freeze Data in A/T Mode Menu for a pass/fail.

    Does the result indicate a failed?

    YES—Repair shift valve A, or replace the transmission, then go to step 13.

    NO—Intermittent failure, the system is OK at this time. If the tester indicates NOT COMPLETED, return to step 10 and recheck. ■

13. Clear the DTC with the HDS.

14. Test-drive the vehicle in the D position through all five gears at speeds over 12 mph (20 km/h) for more than 20 seconds, then slow down to a stop.

15. Retest-drive the vehicle in the D position through all five gears at speeds over 12 mph (20 km/h) for more than 20 seconds, then slow down to a stop.

16. Monitor the OBD status for P0752 in the DTCs/ Freeze Data in A/T Mode Menu for a pass/fail.

    Does the result indicate a passed?

    YES—Troubleshooting is completed. ■

    NO—Return to step 8 and recheck.

DTC Troubleshooting (cont'd)

DTC P0756: Shift Solenoid Valve B Stuck OFF

2005-2006 Models

NOTE: Record all freeze data and review General Troubleshooting Information (see page 14-8) before you troubleshoot.

1. Warm up the engine to normal operating temperature (the radiator fan comes on).

2. Make sure that the transmission is filled to the proper level, and check for fluid leaks.

3. Drain the ATF (see step 3 on page 14-272) through a strainer. Inspect the strainer for metal debris or excessive clutch material.

   Does the strainer contain metal debris or excessive clutch material?

   YES—Replace the transmission. ■

   NO—Replace the ATF (see step 4 on page 14-272) then go to step 4.

4. Clear the DTC with the HDS.

5. Test-drive the vehicle in the D position through all five gears at speeds over 12 mph (20 km/h) for more than 20 seconds, then slow down to a stop.

6. Retest-drive the vehicle in the D position through all five gears at speeds over 12 mph (20 km/h) for more than 20 seconds, then slow down to a stop.

7. Monitor the OBD status for P0756 in the DTCs/ Freeze Data in A/T Mode Menu for a pass/fail.

   Does the result indicate a failed?

   YES—Go to step 8.

   NO—Intermittent failure, the system is OK at this time. If the tester indicates NOT COMPLETED, return to step 5 and recheck. ■

8. Clear the DTC with the HDS.

9. Choose Shift Solenoid B in Miscellaneous Test Menu, and check that the shift solenoid valve B operates with the HDS.

   Is a clicking sound heard?

   YES—Go to step 10.

   NO—Replace shift solenoid valve B (see page 14-260), then go to step 13.

10. Test-drive the vehicle in the D position through all five gears at speeds over 12 mph (20 km/h) for more than 20 seconds, then slow down to a stop.

11. Retest-drive the vehicle in the D position through all five gears at speeds over 12 mph (20 km/h) for more than 20 seconds, then slow down to a stop.

12. Monitor the OBD status for P0756 in the DTCs/ Freeze Data in A/T Mode Menu for a pass/fail.

    Does the result indicate a failed?

    YES—Repair shift valve B, or replace the transmission, then go to step 13.

    NO—Intermittent failure, the system is OK at this time. If the tester indicates NOT COMPLETED, return to step 10 and recheck. ■

13. Clear the DTC with the HDS.

14. Test-drive the vehicle in the D position through all five gears at speeds over 12 mph (20 km/h) for more than 20 seconds, then slow down to a stop.

15. Retest-drive the vehicle in the D position through all five gears at speeds over 12 mph (20 km/h) for more than 20 seconds, then slow down to a stop.

16. Monitor the OBD status for P0756 in the DTCs/ Freeze Data in A/T Mode Menu for a pass/fail.

    Does the result indicate a passed?

    YES—Troubleshooting is completed. ■

    NO—Return to step 8 and recheck.

DTC P0757: Shift Solenoid Valve B Stuck ON

2005-2006 Models

NOTE: Record all freeze data and review General Troubleshooting Information (see page 14-8) before you troubleshoot.

1. Warm up the engine to normal operating temperature (the radiator fan comes on).

2. Make sure that the transmission is filled to the proper level, and check for fluid leaks.

3. Drain the ATF (see step 3 on page 14-272) through a strainer. Inspect the strainer for metal debris or excessive clutch material.

   Does the strainer contain metal debris or excessive clutch material?

   YES—Replace the transmission. ■

   NO—Replace the ATF (see step 4 on page 14-272) then go to step 4.

4. Clear the DTC with the HDS.

5. Test-drive the vehicle in the D position through all five gears at speeds over 12 mph (20 km/h) for more than 20 seconds, then slow down to a stop.

6. Retest-drive the vehicle in the D position through all five gears at speeds over 12 mph (20 km/h) for more than 20 seconds, then slow down to a stop.

7. Monitor the OBD status for P0757 in the DTCs/ Freeze Data in A/T Mode Menu for a pass/fail.

   Does the result indicate a failed?

   YES—Go to step 8.

   NO—Intermittent failure, the system is OK at this time. If the tester indicates NOT COMPLETED, return to step 5 and recheck. ■

8. Clear the DTC with the HDS.

9. Choose Shift Solenoid B in Miscellaneous Test Menu, and check that the shift solenoid valve B operates with the HDS.

   Is a clicking sound heard?

   YES—Go to step 10.

   NO—Replace shift solenoid valve B (see page 14-260), then go to step 13.

10. Test-drive the vehicle in the D position through all five gears at speeds over 12 mph (20 km/h) for more than 20 seconds, then slow down to a stop.

11. Retest-drive the vehicle in the D position through all five gears at speeds over 12 mph (20 km/h) for more than 20 seconds, then slow down to a stop.

12. Monitor the OBD status for P0757 in the DTCs/ Freeze Data in A/T Mode Menu for a pass/fail.

    Does the result indicate a failed?

    YES—Repair shift valve B, or replace the transmission, then go to step 13.

    NO—Intermittent failure, the system is OK at this time. If the tester indicates NOT COMPLETED, return to step 10 and recheck. ■

13. Clear the DTC with the HDS.

14. Test-drive the vehicle in the D position through all five gears at speeds over 12 mph (20 km/h) for more than 20 seconds, then slow down to a stop.

15. Retest-drive the vehicle in the D position through all five gears at speeds over 12 mph (20 km/h) for more than 20 seconds, then slow down to a stop.

16. Monitor the OBD status for P0757 in the DTCs/ Freeze Data in A/T Mode Menu for a pass/fail.

    Does the result indicate a passed?

    YES—Troubleshooting is completed. ■

    NO—Return to step 8 and recheck.

DTC Troubleshooting (cont'd)

DTC P0761: Shift Solenoid Valve C Stuck OFF

2005-2006 Models

NOTE: Record all freeze data and review General Troubleshooting Information (see page 14-8) before you troubleshoot.

1. Warm up the engine to normal operating temperature (the radiator fan comes on).

2. Make sure that the transmission is filled to the proper level, and check for fluid leaks.

3. Drain the ATF (see step 3 on page 14-272) through a strainer. Inspect the strainer for metal debris or excessive clutch material.

   Does the strainer contain metal debris or excessive clutch material?

   YES—Replace the transmission. ■

   NO—Replace the ATF (see step 4 on page 14-272) then go to step 4.

4. Clear the DTC with the HDS.

5. Test-drive the vehicle in the D position through all five gears at speeds over 12 mph (20 km/h) for more than 20 seconds, then slow down to a stop.

6. Retest-drive the vehicle in the D position through all five gears at speeds over 12 mph (20 km/h) for more than 20 seconds, then slow down to a stop.

7. Monitor the OBD status for P0761 in the DTCs/ Freeze Data in A/T Mode Menu for a pass/fail.

   Does the result indicate a failed?

   YES—Go to step 8.

   NO—Intermittent failure, the system is OK at this time. If the tester indicates NOT COMPLETED, return to step 5 and recheck. ■

8. Clear the DTC with the HDS.

9. Choose Shift Solenoid C in Miscellaneous Test Menu, and check that the shift solenoid valve C operates with the HDS.

   Is a clicking sound heard?

   YES—Go to step 10.

   NO—Replace shift solenoid valve C (see page 14-260), then go to step 13.

10. Test-drive the vehicle in the D position through all five gears at speeds over 12 mph (20 km/h) for more than 20 seconds, then slow down to a stop.

11. Retest-drive the vehicle in the D position through all five gears at speeds over 12 mph (20 km/h) for more than 20 seconds, then slow down to a stop.

12. Monitor the OBD status for P0761 in the DTCs/ Freeze Data in A/T Mode Menu for a pass/fail.

    Does the result indicate a failed?

    YES—Repair shift valve C, or replace the transmission, then go to step 13.

    NO—Intermittent failure, the system is OK at this time. If the tester indicates NOT COMPLETED, return to step 10 and recheck. ■

13. Clear the DTC with the HDS.

14. Test-drive the vehicle in the D position through all five gears at speeds over 12 mph (20 km/h) for more than 20 seconds, then slow down to a stop.

15. Retest-drive the vehicle in the D position through all five gears at speeds over 12 mph (20 km/h) for more than 20 seconds, then slow down to a stop.

16. Monitor the OBD status for P0761 in the DTCs/ Freeze Data in A/T Mode Menu for a pass/fail.

    Does the result indicate a passed?

    YES—Troubleshooting is completed. ■

    NO—Return to step 8 and recheck.

DTC P0771: Shift Solenoid Valve E Stuck OFF

2005-2006 Models

NOTE: Record all freeze data and review General Troubleshooting Information (see page 14-8) before you troubleshoot.

1. Warm up the engine to normal operating temperature (the radiator fan comes on).

2. Make sure that the transmission is filled to the proper level, and check for fluid leaks.

3. Drain the ATF (see step 3 on page 14-272) through a strainer. Inspect the strainer for metal debris or excessive clutch material.

   Does the strainer contain metal debris or excessive clutch material?

   YES—Replace the transmission. ■

   NO—Replace the ATF (see step 4 on page 14-272) then go to step 4.

4. Clear the DTC with the HDS.

5. Test-drive the vehicle in the D position through all five gears at speeds over 12 mph (20 km/h) for more than 20 seconds, then slow down to a stop.

6. Retest-drive the vehicle in the D position through all five gears at speeds over 12 mph (20 km/h) for more than 20 seconds, then slow down to a stop.

7. Monitor the OBD status for P0771 in the DTCs/ Freeze Data in A/T Mode Menu for a pass/fail.

   Does the result indicate a failed?

   YES—Go to step 8.

   NO—Intermittent failure, the system is OK at this time. If the tester indicates NOT COMPLETED, return to step 5 and recheck. ■

8. Clear the DTC with the HDS.

9. Choose Shift Solenoid E in Miscellaneous Test Menu, and check that the shift solenoid valve E operates with the HDS.

   Is a clicking sound heard?

   YES—Go to step 10.

   NO—Replace shift solenoid valve E (see page 14-260), then go to step 13.

10. Test-drive the vehicle in the D position through all five gears at speeds over 12 mph (20 km/h) for more than 20 seconds, then slow down to a stop.

11. Retest-drive the vehicle in the D position through all five gears at speeds over 12 mph (20 km/h) for more than 20 seconds, then slow down to a stop.

12. Monitor the OBD status for P0771 in the DTCs/ Freeze Data in A/T Mode Menu for a pass/fail.

    Does the result indicate a failed?

    YES—Repair shift valve E, or replace the transmission, then go to step 13.

    NO—Intermittent failure, the system is OK at this time. If the tester indicates NOT COMPLETED, return to step 10 and recheck. ■

13. Clear the DTC with the HDS.

14. Test-drive the vehicle in the D position through all five gears at speeds over 12 mph (20 km/h) for more than 20 seconds, then slow down to a stop.

15. Retest-drive the vehicle in the D position through all five gears at speeds over 12 mph (20 km/h) for more than 20 seconds, then slow down to a stop.

16. Monitor the OBD status for P0771 in the DTCs/ Freeze Data in A/T Mode Menu for a pass/fail.

    Does the result indicate a passed?

    YES—Troubleshooting is completed. ■

    NO—Return to step 8 and recheck.

DTC Troubleshooting (cont'd)

DTC P0776: A/T Clutch Pressure Control Solenoid Valve B Stuck OFF

2005-2006 Models

NOTE: Record all freeze data and review General Troubleshooting Information (see page 14-8) before you troubleshoot.

1. Warm up the engine to normal operating temperature (the radiator fan comes on).

2. Make sure that the transmission is filled to the proper level, and check for fluid leaks.

3. Drain the ATF (see step 3 on page 14-272) through a strainer. Inspect the strainer for metal debris or excessive clutch material.

   Does the strainer contain metal debris or excessive clutch material?

   YES—Replace the transmission. ■

   NO—Replace the ATF (see step 4 on page 14-272) then go to step 4.

4. Clear the DTC with the HDS.

5. Test-drive the vehicle in the D position through all five gears at speeds over 12 mph (20 km/h) for more than 20 seconds, then slow down to a stop.

6. Retest-drive the vehicle in the D position through all five gears at speeds over 12 mph (20 km/h) for more than 20 seconds, then slow down to a stop.

7. Monitor the OBD status for P0776 in the DTCs/ Freeze Data in A/T Mode Menu for a pass/fail.

   Does the result indicate a failed?

   YES—Go to step 8.

   NO—Intermittent failure, the system is OK at this time. If the tester indicates NOT COMPLETED, return to step 5 and recheck. ■

8. Clear the DTC with the HDS.

9. Choose Clutch Pressure Control (Linear) Solenoid B in Miscellaneous Test Menu, and test the A/T clutch pressure control solenoid valve B with the HDS.

   Is the system OK?

   YES—Intermittent failure, the system is OK at this time. If the tester indicates NOT COMPLETED, return to step 9 and recheck. ■

   NO—Follow the instructions indicated on the HDS by the tester result, but if the tester has not determined the cause of the failure, go to step 10. If any part was replaced, go to step 11.

10. Inspect A/T clutch pressure control solenoid valve B (see page 14-264).

    Does the A/T clutch pressure control solenoid valve B work properly?

    YES—Repair hydraulic system related with shift valve B, or replace the transmission, then go to step 11.

    NO—Replace A/T clutch pressure control solenoid valve B (see page 14-265), then go to step 11.

11. Clear the DTC with the HDS.

12. Test-drive the vehicle in the D position through all five gears at speeds over 12 mph (20 km/h) for more than 20 seconds, then slow down to a stop.

13. Retest-drive the vehicle in the D position through all five gears at speeds over 12 mph (20 km/h) for more than 20 seconds, then slow down to a stop.

14. Monitor the OBD status for P0776 in the DTCs/ Freeze Data in A/T Mode Menu for a pass/fail.

    Does the result indicate a passed?

    YES—Troubleshooting is completed. ■

    NO—Return to step 8 and recheck.

DTC P0777: A/T Clutch Pressure Control Solenoid Valve B Stuck ON

2005-2006 Models

NOTE: Record all freeze data and review General Troubleshooting Information (see page 14-8) before you troubleshoot.

1. Warm up the engine to normal operating temperature (the radiator fan comes on).

2. Make sure that the transmission is filled to the proper level, and check for fluid leaks.

3. Drain the ATF (see step 3 on page 14-272) through a strainer. Inspect the strainer for metal debris or excessive clutch material.

   Does the strainer contain metal debris or excessive clutch material?

   YES—Replace the transmission. ■

   NO—Replace the ATF (see step 4 on page 14-272) then go to step 4.

4. Clear the DTC with the HDS.

5. Test-drive the vehicle in the D position through all five gears at speeds over 12 mph (20 km/h) for more than 20 seconds, then slow down to a stop.

6. Retest-drive the vehicle in the D position through all five gears at speeds over 12 mph (20 km/h) for more than 20 seconds, then slow down to a stop.

7. Monitor the OBD status for P0777 in DTC Monitor Tool from DTCs/Freeze Data in A/T Mode Menu for a pass/fail.

   Does the result indicate a failed?

   YES—Go to step 8.

   NO—Intermittent failure, the system is OK at this time. If the tester indicates NOT COMPLETED, return to step 5 and recheck. ■

8. Clear the DTC with the HDS.

9. Choose Clutch Pressure Control (Linear) Solenoid B in Miscellaneous Test Menu, and test the A/T clutch pressure control solenoid valve B with the HDS.

   Is the system OK?

   YES—Intermittent failure, the system is OK at this time. If the tester indicates NOT COMPLETED, return to step 9 and recheck. ■

   NO—Follow the instructions indicated on the HDS by the tester result, but if the tester has not determined the cause of the failure, go to step 10. If any part was replaced, go to step 11.

10. Inspect A/T clutch pressure control solenoid valve B (see page 14-264).

    Does the A/T clutch pressure control solenoid valve B work properly?

    YES—Repair hydraulic system related with shift valve B, or replace the transmission, then go to step 11.

    NO—Replace A/T clutch pressure control solenoid valve B (see page 14-265), then go to step 11.

11. Clear the DTC with the HDS.

12. Test-drive the vehicle in the D position through all five gears at speeds over 12 mph (20 km/h) for more than 20 seconds, then slow down to a stop.

13. Retest-drive the vehicle in the D position through all five gears at speeds over 12 mph (20 km/h) for more than 20 seconds, then slow down to a stop.

14. Monitor the OBD status for P0777 in the DTCs/Freeze Data in A/T Mode Menu for a pass/fail.

    Does the result indicate a passed?

    YES—Troubleshooting is completed. ■

    NO—Return to step 8 and recheck.

DTC Troubleshooting (cont'd)

DTC P0780: Shift Control System

2005-2006 Models

NOTE: Record all freeze data and review General Troubleshooting Information (see page 14-8) before you troubleshoot.

1. Check for other DTCs indicated simultaneous with the code P0780.

   NOTE: P0780 means there is one or more A/T DTCs about the shift control system.

   Are there other DTCs?

   YES—Go to step 2.

   NO—Update the PCM if it does not have the latest software, or substitute a known-good PCM (see page 14-11), then recheck. If the symptom/indication goes away with a known-good PCM, replace the original PCM. ■

2. Perform the troubleshooting for the indicated codes:

   - P1730: (see page 14-241)
   - P1731: (see page 14-243)
   - P1732: (see page 14-245)
   - P1733: (see page 14-247)
   - P1734: (see page 14-249)

DTC P0796: A/T Clutch Pressure Control Solenoid Valve C Stuck OFF

2005-2006 Models

NOTE: Record all freeze data and review General Troubleshooting Information (see page 14-8) before you troubleshoot.

1. Warm up the engine to normal operating temperature (the radiator fan comes on).

2. Make sure that the transmission is filled to the proper level, and check for fluid leaks.

3. Drain the ATF (see step 3 on page 14-272) through a strainer. Inspect the strainer for metal debris or excessive clutch material.

   Does the strainer contain metal debris or excessive clutch material?

   YES—Replace the transmission. ■

   NO—Replace the ATF (see step 4 on page 14-272) then go to step 4.

4. Clear the DTC with the HDS.

5. Test-drive the vehicle in the D position through all five gears at speeds over 12 mph (20 km/h) for more than 20 seconds, then slow down to a stop.

6. Retest-drive the vehicle in the D position through all five gears at speeds over 12 mph (20 km/h) for more than 20 seconds, then slow down to a stop.

7. Monitor the OBD status for P0796 in the DTCs/ Freeze Data in A/T Mode Menu for a pass/fail.

   Does the result indicate a failed?

   YES—Go to step 8.

   NO—Intermittent failure, the system is OK at this time. If the tester indicates NOT COMPLETED, return to step 5 and recheck. ■

8. Clear the DTC with the HDS.

9. Choose Clutch Pressure Control (Linear) Solenoid C in Miscellaneous Test Menu, and test the A/T clutch pressure control solenoid valve C with the HDS.

   Is the system OK?

   YES—Intermittent failure, the system is OK at this time. If the tester indicates NOT COMPLETED, return to step 9 and recheck. ■

   NO—Follow the instructions indicated on the HDS by the tester result, but if the tester has not determined the cause of the failure, go to step 10. If any part was replaced, go to step 11.

10. Inspect A/T clutch pressure control solenoid valve C (see page 14-264).

    Does the A/T clutch pressure control solenoid valve C work properly?

    YES—Repair hydraulic system related with shift valve B and C, or replace the transmission, then go to step 11.

    NO—Replace A/T clutch pressure control solenoid valve C (see page 14-265), then go to step 11.

11. Clear the DTC with the HDS.

12. Test-drive the vehicle in the D position through all five gears at speeds over 12 mph (20 km/h) for more than 20 seconds, then slow down to a stop.

13. Retest-drive the vehicle in the D position through all five gears at speeds over 12 mph (20 km/h) for more than 20 seconds, then slow down to a stop.

14. Monitor the OBD status for P0796 in the DTCs/ Freeze Data in A/T Mode Menu for a pass/fail.

    Does the result indicate a passed?

    YES—Troubleshooting is completed. ■

    NO—Return to step 8 and recheck.

DTC Troubleshooting (cont'd)

DTC P0797: A/T Clutch Pressure Control Solenoid Valve C Stuck ON

2005-2006 Models

NOTE: Record all freeze data and review General Troubleshooting Information (see page 14-8) before you troubleshoot.

1. Warm up the engine to normal operating temperature (the radiator fan comes on).

2. Make sure that the transmission is filled to the proper level, and check for fluid leaks.

3. Drain the ATF (see step 3 on page 14-272) through a strainer. Inspect the strainer for metal debris or excessive clutch material.

   Does the strainer contain metal debris or excessive clutch material?

   YES—Replace the transmission. ■

   NO—Replace the ATF (see step 4 on page 14-272) then go to step 4.

4. Clear the DTC with the HDS.

5. Test-drive the vehicle in the D position through all five gears at speeds over 12 mph (20 km/h) for more than 20 seconds, then slow down to a stop.

6. Retest-drive the vehicle in the D position through all five gears at speeds over 12 mph (20 km/h) for more than 20 seconds, then slow down to a stop.

7. Monitor the OBD status for P0797 in the DTCs/ Freeze Data in A/T Mode Menu for a pass/fail.

   Does the result indicate a failed?

   YES—Go to step 8.

   NO—Intermittent failure, the system is OK at this time. If the tester indicates NOT COMPLETED, return to step 5 and recheck. ■

8. Clear the DTC with the HDS.

9. Choose Clutch Pressure Control (Linear) Solenoid C in Miscellaneous Test Menu, and test the A/T clutch pressure control solenoid valve C with the HDS.

   Is the system OK?

   YES—Intermittent failure, the system is OK at this time. If the tester indicates NOT COMPLETED, return to step 9 and recheck. ■

   NO—Follow the instructions indicated on the HDS by the tester result, but if the tester has not determined the cause of the failure, go to step 10. If any part was replaced, go to step 11.

10. Inspect A/T clutch pressure control solenoid valve C (see page 14-264).

    Does the A/T clutch pressure control solenoid valve C work properly?

    YES—Repair hydraulic system related with shift valves B and C, or replace the transmission, then go to step 11.

    NO—Replace A/T clutch pressure control solenoid valve C (see page 14-265), then go to step 11.

11. Clear the DTC with the HDS.

12. Test-drive the vehicle in the D position through all five gears at speeds over 12 mph (20 km/h) for more than 20 seconds, then slow down to a stop.

13. Retest-drive the vehicle in the D position through all five gears at speeds over 12 mph (20 km/h) for more than 20 seconds, then slow down to a stop.

14. Monitor the OBD status for P0797 in the DTCs/ Freeze Data in A/T Mode Menu for a pass/fail.

    Does the result indicate a passed?

    YES—Troubleshooting is completed. ■

    NO—Return to step 8 and recheck.

DTC P0812: Open in Transmission Range Switch ATP RVS Switch Circuit

2005-2006 Models

NOTE:
- Record all freeze data and review General Troubleshooting Information (see page 14-8) before you troubleshoot.
- This code is caused by an electrical circuit problem and cannot be caused by a mechanical problem in the transmission.

1. Turn the ignition switch ON (II).

2. Shift to the R position, and verify the A/T R SWITCH signal with the HDS in the A/T data list.

   Is the A/T R SWITCH ON?

   YES—Go to step 3.

   NO—Inspect the end of the selector control shaft (see step 6 on page 14-308), adjust the shift cable (see page 14-299), then recheck. If problem still exists, go to step 4.

3. Check the REVERSE SWITCH signal with the HDS.

   Is the REVERSE SWITCH ON?

   YES—Intermittent failure, the system is OK at this time. Check for poor connections or loose terminals at the transmission range switch and PCM. ■

   NO—Go to step 4.

4. Turn the ignition switch OFF.

5. Check for continuity between PCM connector terminals A8 and body ground, and between A9 and body ground.

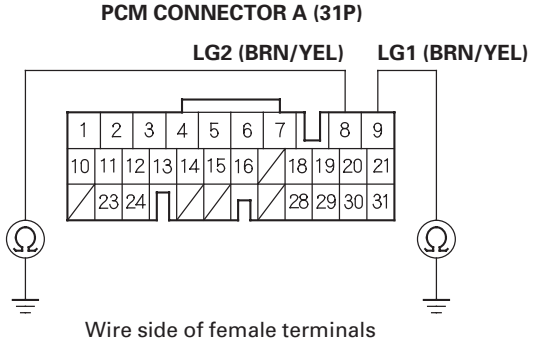

   Is there continuity?

   YES—Go to step 6.

   NO—Repair open in the wires between PCM connector terminals A8, A9, and ground (G101), and repair poor ground (G101), then go to step 12.

(cont'd)

DTC Troubleshooting (cont'd)

6. Turn the ignition switch ON (II).

7. Shift to the R position.

8. Measure the voltage between PCM connector terminals C12 and A9.

PCM CONNECTORS

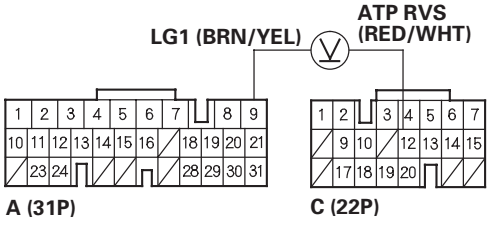

Wire side of female terminals

Is there voltage?

YES—Go to step 9.

NO—Check for loose or poor connections at PCM connector terminal C12. If the connection is OK, update the PCM if it does not have the latest software, or substitute a known-good PCM (see page 14-11), then recheck. If the symptom/indication goes away with a known-good PCM, replace the original PCM. ■

9. Turn the ignition switch OFF.

10. Disconnect the transmission range switch connector.

11. Check for continuity between transmission range switch connector terminals No. 1 and No. 10. The shift position must be the R position.

TRANSMISSION RANGE SWITCH CONNECTOR

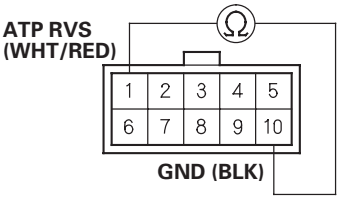

Terminal side of male terminals

Is there continuity?

YES—Check for loose or poor connections at the transmission range switch connector terminal No. 1. If the connection is OK, repair open in the wire between PCM connector terminal C12 and the transmission range switch, then go to step 12.

NO—Replace the transmission range switch, then go to step 12.

12. Clear the DTC with the HDS.

13. Start the engine, and shift the shift lever slowly into the P, R, then N position.

14. Monitor the OBD status for P0812 in the DTCs/Freeze Data in A/T Mode Menu for a pass/fail.

Does the result indicate a passed?

YES—Troubleshooting is completed. ■

NO—Return to step 1 and recheck.

DTC P0815: Short in Transmission Gear Selection Switch Upshift Switch Circuit, or Transmission Gear Selection Switch Upshift Switch Stuck ON

2005-2006 Models

NOTE:
- Record all freeze data and review General Troubleshooting Information (see page 14-8) before you troubleshoot.
- This code is caused by an electrical circuit problem and cannot be caused by a mechanical problem in the transmission.

1. Turn the ignition switch ON (II).

2. Shift to the P position.

3. Verify the transmission gear selection switch upshift switch inputs with the HDS in the A/T data list.

   Is UPSHIFT SW ON?

   YES—Go to step 4.

   NO—Intermittent failure, the system is OK at this time. Check the WHT/BLU wire for an intermittent short to ground between the transmission gear selection switch and PCM. ■

4. Turn the ignition switch OFF.

5. Disconnect the transmission gear selection switch connector.

6. Turn the ignition switch ON (II).

7. Verify the transmission gear selection switch upshift switch inputs with the HDS in the A/T data list.

   Is UPSHIFT SW ON?

   YES—Go to step 8.

   NO—Replace the transmission gear selection switch (see page 14-270), then go to step 12.

8. Turn the ignition switch OFF.

9. Jump the SCS line with the HDS.

10. Disconnect PCM connector D (17P).

11. Check for continuity between transmission gear selection switch connector terminal No. 8 and body ground.

TRANSMISSION GEAR SELECTION SWITCH/ PARK PIN SWITCH CONNECTOR

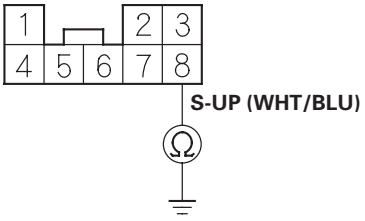

Wire side of female terminals

Is there continuity?

YES—Repair short to ground in the wire between PCM connector terminal D3 and the transmission gear selection switch connector, then go to step 12.

NO—Check for loose or poor connections at PCM connector terminal D3. If the connection is OK, update the PCM if it does not have the latest software, or substitute a known-good PCM (see page 14-11), then recheck. If the symptom/ indication goes away with a known-good PCM, replace the original PCM. ■

(cont'd)

DTC Troubleshooting (cont'd)

12. Clear the DTC with the HDS.

13. Start the engine in the P position, wait for more than 10 seconds, then shift to the M position.

14. Push the shift lever toward shiftup position (+) slowly, and return to neutral position; repeat this test 10 times or more.

15. Pull the shift lever toward shiftdown position (−) slowly, and return to neutral position; repeat this test 10 times or more.

16. Monitor the OBD status for P0815 in the DTCs/ Freeze Data in A/T Mode Menu for a pass/fail.

    Does the result indicate a passed?

    YES—Troubleshooting is completed. ■

    NO—Return to step 1 and recheck.

DTC P0816: Short in Transmission Gear Selection Switch Downshift Switch Circuit, or Transmission Gear Selection Switch Downshift Switch Stuck ON

2005-2006 Models

NOTE:
- Record all freeze data and review General Troubleshooting Information (see page 14-8) before you troubleshoot.
- This code is caused by an electrical circuit problem and cannot be caused by a mechanical problem in the transmission.

1. Turn the ignition switch ON (II).

2. Shift to the P position.

3. Verify the transmission gear selection switch downshift switch inputs with the HDS in the A/T data list.

   Is DOWNSHIFT SW ON?

   YES—Go to step 4.

   NO—Intermittent failure, the system is OK at this time. Check the BRN/WHT wire for an intermittent short to ground between the transmission gear selection switch and PCM. ■

4. Turn the ignition switch OFF.

5. Disconnect the transmission gear selection switch connector.

6. Turn the ignition switch ON (II).

7. Verify the transmission gear selection switch downshift switch inputs with the HDS in the A/T data list.

   Is DOWNSHIFT SW ON?

   YES—Go to step 8.

   NO—Replace the transmission gear selection switch (see page 14-270), then go to step 12.

8. Turn the ignition switch OFF.

9. Jump the SCS line with the HDS.

10. Disconnect PCM connector D (17P).

11. Check for continuity between transmission gear selection switch connector terminal No. 2 and body ground.

TRANSMISSION GEAR SELECTION SWITCH/ PARK PIN SWITCH CONNECTOR

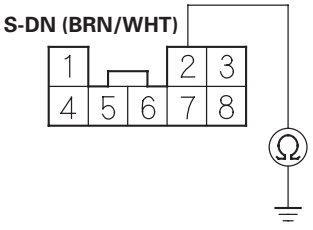

Wire side of female terminals

Is there continuity?

YES—Repair short to ground in the wire between PCM connector terminal D9 and the transmission gear selection switch connector, then go to step 12.

NO—Check for loose or poor connections at PCM connector terminal D9. If the connection is OK, update the PCM if it does not have the latest software, or substitute a known-good PCM (see page 14-11), then recheck. If the symptom/ indication goes away with a known-good PCM, replace the original PCM. ■

(cont'd)

DTC Troubleshooting (cont'd)

12. Clear the DTC with the HDS.

13. Start the engine in the P position, wait for more than 10 seconds, then shift to the M position.

14. Push the shift lever toward shiftup position (+) slowly, and return to neutral position; repeat this test 10 times or more.

15. Pull the shift lever toward shiftdown position (−) slowly, and return to neutral position; repeat this test 10 times or more.

16. Monitor the OBD status for P0816 in the DTCs/ Freeze Data in A/T Mode Menu for a pass/fail.

    Does the result indicate a passed?

    YES—Troubleshooting is completed. ■

    NO—Return to step 1 and recheck.

DTC P0842: Short in 2nd Clutch Transmission Fluid Pressure Switch Circuit, or 2nd Clutch Transmission Fluid Pressure Switch Stuck ON

2005-2006 Models

NOTE:
- Record all freeze data and review General Troubleshooting Information (see page 14-8) before you troubleshoot.
- This code is caused by an electrical circuit problem and cannot be caused by a mechanical problem in the transmission.

1. Clear the DTC with the HDS.

2. Check the 2nd PRES SWITCH signal with the HDS in the A/T data list when not in 2nd gear.

   Is the 2nd PRES SWITCH OFF?

   YES—Go to step 3.

   NO—Go to step 5.

3. Start the engine, and warm it up to normal operating temperature (the radiator fan comes on). Drive the vehicle in 2nd gear in the M position for more than 5 seconds, then upshift to 4th gear, and drive in 4th gear for more than 5 seconds. Slow down to a stop.

4. Monitor the OBD status for P0842 in the DTCs/ Freeze Data in A/T Mode Menu for a pass/fail.

   Does the result indicate a failed?

   YES—Go to step 5.

   NO—Intermittent failure, the system is OK at this time. Check the BLU/RED wire for an intermittent short to ground between the 2nd clutch transmission fluid pressure switch and PCM. If the tester indicates NOT COMPLETED, return to step 3 and recheck. ■

5. Turn the ignition switch OFF.

6. Disconnect the 2nd clutch transmission fluid pressure switch connector.

7. Turn the ignition switch ON (II).

8. Check the 2nd PRES SWITCH signal with the HDS in the A/T data list.

   Is the 2nd PRES SWITCH OFF?

   YES—Replace the 2nd clutch transmission fluid pressure switch (see page 14-267), then go to step 13.

   NO—Go to step 9.

9. Turn the ignition switch OFF.

10. Jump the SCS line with the HDS.

11. Disconnect PCM connector C (22P).

12. Check for continuity between PCM connector terminal C13 and body ground.

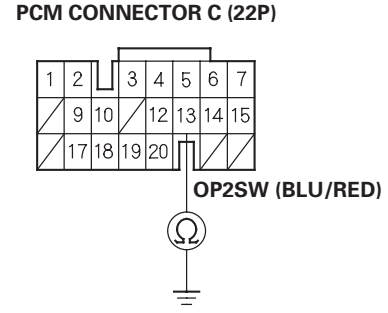

Wire side of female terminals

   Is there continuity?

   YES—Repair short to ground in the wire between PCM connector terminal C13 and the 2nd clutch transmission fluid pressure switch, then go to step 13.

   NO—Update the PCM if it does not have the latest software, or substitute a known-good PCM (see page 14-11), then recheck. If the symptom/ indication goes away with a known-good PCM, replace the original PCM. ■

(cont'd)

DTC Troubleshooting (cont'd)

13. Clear the DTC with the HDS.

14. Start the engine, and warm it up to normal operating temperature (the radiator fan comes on). Drive the vehicle in 2nd gear in the M position for more than 5 seconds, then upshift to 4th gear, and drive in 4th gear for more than 5 seconds. Slow down to a stop.

15. Monitor the OBD status for P0842 in the DTCs/ Freeze Data in A/T Mode Menu for a pass/fail.

    Does the result indicate a passed?

    YES—Troubleshooting is completed. ■

    NO—Return to step 1 and recheck.

DTC P0843: Open in 2nd Clutch Transmission Fluid Pressure Switch Circuit, or 2nd Clutch Transmission Fluid Pressure Switch Stuck OFF

2005-2006 Models

NOTE:
- Record all freeze data and review General Troubleshooting Information (see page 14-8) before you troubleshoot.
- This code is caused by an electrical circuit problem and cannot be caused by a mechanical problem in the transmission.

1. Clear the DTC with the HDS.

2. Start the engine, and warm it up to normal operating temperature (the radiator fan comes on). Shift into the M position 2nd gear while pressing the brake pedal, and verify that the SHIFT MAP NUMBER indicates 2nd with the HDS in the A/T data list.

3. Check the 2nd PRES SWITCH signal with the HDS in the A/T data list.

   Is the 2nd PRES SWITCH ON?

   YES—Go to step 4.

   NO—Go to step 6.

4. Drive the vehicle in 2nd gear in the M position for more than 5 seconds, then upshift to 4th gear, and drive in 4th gear for more than 5 seconds. Slow down to a stop.

5. Monitor the OBD status for P0843 in the DTCs/ Freeze Data in A/T Mode Menu for a pass/fail.

   Does the result indicate a failed?

   YES—Go to step 6.

   NO—Intermittent failure, the system is OK at this time. Check for poor connections or loose terminals at the 2nd clutch transmission fluid pressure switch and PCM. If the tester indicates NOT COMPLETED, return to step 4 and recheck. ■

6. Turn the ignition switch OFF.

7. Disconnect the 2nd clutch transmission fluid pressure switch connector.

8. Turn the ignition switch ON (II).

9. Measure the voltage between the 2nd clutch transmission fluid pressure switch connector terminal and body ground.

2ND CLUTCH TRANSMISSION FLUID PRESSURE SWITCH CONNECTOR

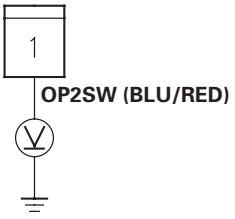

Wire side of female terminals

Is there about 5 V?

YES—Replace the 2nd clutch transmission fluid pressure switch (see page 14-267), then go to step 11.

NO—Go to step 10.

(cont'd)

DTC Troubleshooting (cont'd)

10. Measure the voltage between PCM connector terminal C13 and body ground.

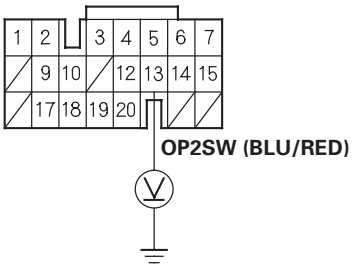

Wire side of female terminals

Is there about 5 V?

YES—Repair open in the wire between PCM connector terminal C13 and the 2nd clutch transmission fluid pressure switch, then go to step 11.

NO—Check for loose or poor connections at PCM connector terminal C13. If the connection is OK, update the PCM if it does not have the latest software, or substitute a known-good PCM (see page 14-11), then recheck. If the symptom/indication goes away with a known-good PCM, replace the original PCM. ■

11. Clear the DTC with the HDS.

12. Start the engine, and warm it up to normal operating temperature (the radiator fan comes on). Drive the vehicle in 2nd gear in the M position for more than 5 seconds, then upshift to 4th gear, and drive in 4th gear for more than 5 seconds. Slow down to a stop.

13. Monitor the OBD status for P0843 in the DTCs/Freeze Data in A/T Mode Menu for a pass/fail.

Does the result indicate a passed?

YES—Troubleshooting is completed. ■

NO—Return to step 1 and recheck.

DTC P0847: Short in 3rd Clutch Transmission Fluid Pressure Switch Circuit, or 3rd Clutch Transmission Fluid Pressure Switch Stuck ON

2005-2006 Models

NOTE:
- Record all freeze data and review General Troubleshooting Information (see page 14-8) before you troubleshoot.
- This code is caused by an electrical circuit problem and cannot be caused by a mechanical problem in the transmission.

1. Clear the DTC with the HDS.

2. Check the 3rd PRES SWITCH signal with the HDS in the A/T data list when not in 3rd gear.

   Is the 3rd PRES SWITCH ON?

   YES—Go to step 5.

   NO—Go to step 3.

3. Start the engine, and warm it up to normal operating temperature (the radiator fan comes on). Drive the vehicle in 3rd gear in the M position for more than 5 seconds, then upshift to 4th gear, and drive in 4th gear for more than 5 seconds. Slow down to a stop.

4. Monitor the OBD status for P0847 in the DTCs/ Freeze Data in A/T Mode Menu for a pass/fail.

   Does the result indicate a failed?

   YES—Go to step 5.

   NO—Intermittent failure, the system is OK at this time. Check the BLU/WHT wire for an intermittent short to ground between the 3rd clutch transmission fluid pressure switch and PCM. If the tester indicates NOT COMPLETED, return to step 3 and recheck. ■

5. Turn the ignition switch OFF.

6. Disconnect the 3rd clutch transmission fluid pressure switch connector.

7. Turn the ignition switch ON (II).

8. Check the 3rd PRES SWITCH signal with the HDS in the A/T data list.

   Is the 3rd PRES SWITCH OFF?

   YES—Replace the 3rd clutch transmission fluid pressure switch (see page 14-267), then go to step 13.

   NO—Go to step 9.

9. Turn the ignition switch OFF.

10. Jump the SCS line with the HDS.

11. Disconnect PCM connector C (22P).

12. Check for continuity between PCM connector terminal C10 and body ground.

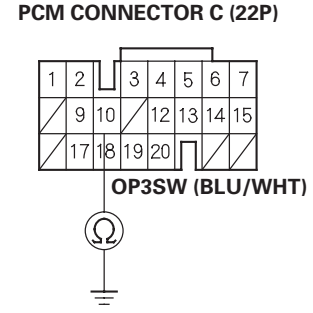

Wire side of female terminals

   Is there continuity?

   YES—Repair short to ground in the wire between PCM connector terminal C10 and the 3rd clutch transmission fluid pressure switch, go to step 13.

   NO—Update the PCM if it does not have the latest software, or substitute a known-good PCM (see page 14-11), then recheck. If the symptom/ indication goes away with a known-good PCM, replace the original PCM. ■

(cont'd)

DTC Troubleshooting (cont'd)

13. Clear the DTC with the HDS.

14. Start the engine, and warm it up to normal operating temperature (the radiator fan comes on). Drive the vehicle in 3rd gear in the M position for more than 5 seconds, then upshift to 4th gear, and drive in 4th gear for more than 5 seconds. Slow down to a stop.

15. Monitor the OBD status for P0847 in the DTCs/ Freeze Data in A/T Mode Menu for a pass/fail.

    Does the result indicate a passed?

    YES—Troubleshooting is completed. ■

    NO—Return to step 1 and recheck.

DTC P0848: Open in 3rd Clutch Transmission Fluid Pressure Switch Circuit, or 3rd Clutch Transmission Fluid Pressure Switch Stuck OFF

2005-2006 Models

NOTE:
- Record all freeze data and review General Troubleshooting Information (see page 14-8) before you troubleshoot.
- This code is caused by an electrical circuit problem and cannot be caused by a mechanical problem in the transmission.

1. Clear the DTC with the HDS.

2. Start the engine, and warm it up to normal operating temperature (the radiator fan comes on). Drive the vehicle in the 3rd gear in the M position, and verify that the SHIFT MAP NUMBER indicates 3rd with the HDS in the A/T data list.

3. Check the 3rd PRES SWITCH signal with the HDS in the A/T data list.

   Is the 3rd PRES SWITCH ON?

   YES—Go to step 4.

   NO—Go to step 6.

4. Drive the vehicle in 3rd gear in the M position for more than 5 seconds, then upshift to 4th gear, and drive in 4th gear for more than 5 seconds. Slow down to a stop.

5. Monitor the OBD status for P0848 in the DTCs/ Freeze Data in A/T Mode Menu for a pass/fail.

   Does the result indicate a failed?

   YES—Go to step 6.

   NO—Intermittent failure, the system is OK at this time. Check for poor connections or loose terminals at the 3rd clutch transmission fluid pressure switch and PCM. If the tester indicates NOT COMPLETED, return to step 4 and recheck. ■

6. Turn the ignition switch OFF.

7. Disconnect the 3rd clutch transmission fluid pressure switch connector.

8. Turn the ignition switch ON (II).

9. Measure the voltage between the 3rd clutch transmission fluid pressure switch connector terminal and body ground.

3RD CLUTCH TRANSMISSION FLUID PRESSURE SWITCH CONNECTOR

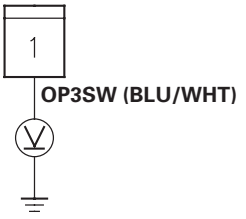

Wire side of female terminals

Is there about 5 V?

YES—Replace the 3rd clutch transmission fluid pressure switch (see page 14-267), then go to step 11.

NO—Go to step 10.

(cont'd)

DTC Troubleshooting (cont'd)

10. Measure the voltage between PCM connector terminal C10 and body ground.

PCM CONNECTOR C (22P)

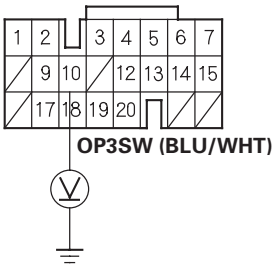

Wire side of female terminals

Is there about 5 V?

YES—Repair open in the wire between PCM connector terminal C10 and the 3rd clutch transmission fluid pressure switch, then go to step 11.

NO—Check for loose or poor connections at PCM connector terminal C10. If the connection is OK, update the PCM if it does not have the latest software, or substitute a known-good PCM (see page 14-11), then recheck. If the symptom/indication goes away with a known-good PCM, replace the original PCM. ■

11. Clear the DTC with the HDS.

12. Start the engine, and warm it up to normal operating temperature (the radiator fan comes on). Drive the vehicle in 3rd gear in the M position for more than 5 seconds, then upshift to 4th gear, and drive in 4th gear for more than 5 seconds. Slow down to a stop.

13. Monitor the OBD status for P0848 in the DTCs/Freeze Data in A/T Mode Menu for a pass/fail.

    Does the result indicate a passed?

    YES—Troubleshooting is completed. ■

    NO—Return to step 1 and recheck.

DTC P0957: Short in Transmission Gear Selection Switch Circuit, or Transmission Gear Selection Switch Stuck ON

2005-2006 Models

NOTE:
- Record all freeze data and review General Troubleshooting Information (see page 14-8) before you troubleshoot.
- This code is caused by an electrical circuit problem and cannot be caused by a mechanical problem in the transmission.

1. Turn the ignition switch ON (II).

2. Shift to the P position.

3. Verify the transmission gear selection switch sequential sportshift mode switch inputs with the HDS in the A/T data list.

   Is sequential sportshift mode SW ON?

   YES—Go to step 4.

   NO—Intermittent failure, the system is OK at this time. Check the BRN wire for an intermittent short to ground between the transmission gear selection switch and PCM. ■

4. Turn the ignition switch OFF.

5. Disconnect the transmission gear selection switch connector.

6. Turn the ignition switch ON (II).

7. Verify the transmission gear selection switch sequential sportshift mode switch inputs with the HDS in the A/T data list.

   Is sequential sportshift mode SW ON?

   YES—Go to step 8.

   NO—Replace the transmission gear selection switch (see page 14-270), then go to step 12.

8. Turn the ignition switch OFF.

9. Jump the SCS line with the HDS.

10. Disconnect PCM connector D (17P).

11. Check for continuity between transmission gear selection switch connector terminal No. 3 and body ground.

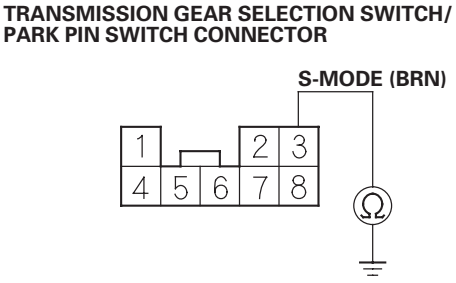

Wire side of female terminals

Is there continuity?

YES—Repair short to ground in the wire between PCM connector terminal D2 and the transmission gear selection switch connector, then go to step 12.

NO—Check for loose or poor connections at PCM connector terminal D2. If the connection is OK, update the PCM if it does not have the latest software, or substitute a known-good PCM (see page 14-11), then recheck. If the symptom/indication goes away with a known-good PCM, replace the original PCM. ■

(cont'd)

DTC Troubleshooting (cont'd)

12. Clear the DTC with the HDS.

13. Start the engine in the P position, wait for more than 10 seconds, then shift to the M position.

14. Push the shift lever toward shiftup position (+) slowly, and return to neutral position; repeat this test 10 times or more.

15. Pull the shift lever toward shiftdown position (−) slowly, and return to neutral position; repeat this test 10 times or more.

16. Monitor the OBD status for P0957 in the DTCs/ Freeze Data in A/T Mode Menu for a pass/fail.

    Does the result indicate a passed?

    YES—Troubleshooting is completed. ■

    NO—Return to step 1 and recheck.

DTC P0958: Open in Transmission Gear Selection Switch Circuit, or Transmission Gear Selection Switch Stuck OFF

2005-2006 Models

NOTE:
- Record all freeze data and review General Troubleshooting Information (see page 14-8) before you troubleshoot.
- This code is caused by an electrical circuit problem and cannot be caused by a mechanical problem in the transmission.

1. Turn the ignition switch ON (II).

2. Shift to the M position.

3. Verify the transmission gear selection switch sequential sportshift mode switch inputs with the HDS in the A/T data list.

   Is sequential sportshift mode SW OFF?

   YES—Go to step 4.

   NO—Intermittent failure, the system is OK at this time. Check for poor connections or loose terminals at the transmission gear selection switch and PCM. ■

4. Turn the ignition switch OFF.

5. Disconnect the transmission gear selection switch connector.

6. Check for continuity between transmission gear selection switch connector terminals No. 3 and No. 7.

TRANSMISSION GEAR SELECTION SWITCH/ PARK PIN SWITCH CONNECTOR

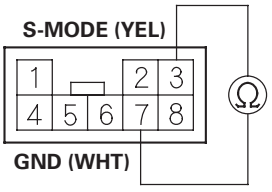

Terminal side of male terminals

Is there continuity when the shift lever is in M position, and no continuity when the shift lever is any other M position?

YES—Go to step 7.

NO—Replace the transmission gear selection switch (see page 14-270), then go to step 10.

(cont'd)

DTC Troubleshooting (cont'd)

7. Turn the ignition switch ON (II).

8. Measure the voltage between transmission gear selection switch connector terminal No. 3 and body ground.

TRANSMISSION GEAR SELECTION SWITCH/ PARK PIN SWITCH CONNECTOR

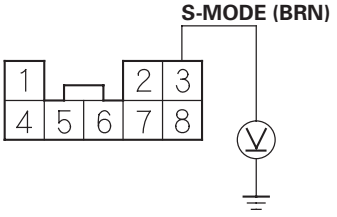

Wire side of female terminals

Is there battery voltage?

YES—Repair open in the wire between transmission gear selection switch connector terminal No. 7 and ground (G402), or repair poor ground (G402), then go to step 10.

NO—Go to step 9.

9. Measure the voltage between PCM connector terminal D2 and body ground.

PCM CONNECTOR D (17P)

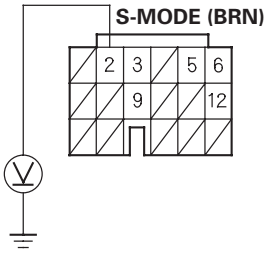

Wire side of female terminals

Is there battery voltage?

YES—Repair open in the wire between PCM connector terminal D2 and the transmission gear selection switch connector, then go to step 10.

NO—Check for loose or poor connections at PCM connector terminal D2. If the connection is OK, update the PCM if it does not have the latest software, or substitute a known-good PCM (see page 14-11), then recheck. If the symptom/ indication goes away with a known-good PCM, replace the original PCM. ■

10. Clear the DTC with the HDS.

11. Start the engine in the P position, wait for more than 10 seconds, then shift to the M position.

12. Push the shift lever toward shiftup position (+) slowly, and return to neutral position; repeat this test 10 times or more.

13. Pull the shift lever toward shiftdown position (—) slowly, and return to neutral position; repeat this test 10 times or more.

14. Monitor the OBD status for P0958 in the DTCs/ Freeze Data in A/T Mode Menu for a pass/fail.

Does the result indicate a passed?

YES—Troubleshooting is completed. ■

NO—Return to step 1 and recheck.

DTC P0962: Problem in A/T Clutch Pressure Control Solenoid Valve A Circuit

2005-2006 Models

NOTE:
- Record all freeze data and review General Troubleshooting Information (see page 14-8) before you troubleshoot.
- This code is caused by an electrical circuit problem and cannot be caused by a mechanical problem in the transmission.

1. Clear the DTC with the HDS.

2. Check that DTC P0962 recurs.

   Is DTC P0962 indicated?

   YES—Go to step 6.

   NO—Go to step 3.

3. Choose Clutch Pressure Control Solenoid Control in Miscellaneous Test Menu, and test the A/T clutch pressure control solenoid valve A with the HDS.

4. Drive with the A/T clutch pressure control solenoid valve A at 1.0 A in Clutch Pressure Control Solenoid Control menu.

5. Monitor the OBD status for P0962 in the DTCs/ Freeze Data in A/T Mode Menu for a pass/fail.

   Does the result indicate a failed?

   YES—Go to step 6.

   NO—Intermittent failure, the system is OK at this time. Check for poor connections or loose terminals at the A/T clutch pressure control solenoid valve A and PCM. If the tester indicates NOT COMPLETED, return to step 3 and recheck. ■

6. Turn the ignition switch OFF.

7. Disconnect the A/T clutch pressure control solenoid valve A connector.

8. Measure A/T clutch pressure control solenoid valve A resistance at the solenoid connector.

A/T CLUTCH PRESSURE CONTROL SOLENOID VALVE A CONNECTOR

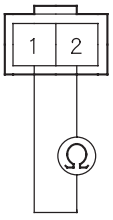

Terminal side of male terminals

   Is there 3— 10 Ω ?

   YES—Go to step 9.

   NO—Replace the A/T clutch pressure control solenoid valve A (see page 14-263), then go to step 12.

9. Check for continuity between A/T clutch pressure control solenoid valve A connector terminal No. 2 and body ground.

A/T CLUTCH PRESSURE CONTROL SOLENOID VALVE A CONNECTOR

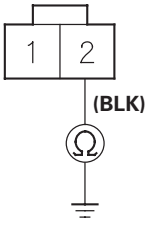

Wire side of female terminals

   Is there continuity?

   YES—Go to step 10.

   NO—Repair open in the wire between the A/T clutch pressure control solenoid valve A and ground (G101), or repair poor ground (G101), then go to step 12.

(cont'd)

DTC Troubleshooting (cont'd)

10. Turn the ignition switch ON (II).

11. Measure the voltage between A/T clutch pressure control solenoid valve A connector terminals No. 1 and No. 2.

A/T CLUTCH PRESSURE CONTROL SOLENOID VALVE A CONNECTOR

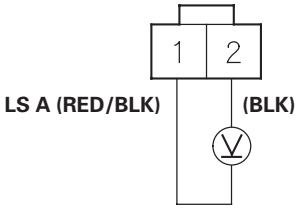

Wire side of female terminals

Is there about 11 V as the ignition switch is turned to the ON (II) position?

YES—Update the PCM if it does not have the latest software, or substitute a known-good PCM (see page 14-11), then recheck. If the symptom/indication goes away with a known-good PCM, replace the original PCM. ■

NO—Repair open or short in the wire between PCM connector terminal C1 and A/T clutch pressure control solenoid valve A, then go to step 12.

12. Clear the DTC with the HDS.

13. Test-drive the vehicle for several minutes in the D position through all five gears.

14. Monitor the OBD status for P0962 in the DTCs/Freeze Data in A/T Mode Menu for a pass/fail.

Does the result indicate a passed?

YES—Troubleshooting is completed. ■

NO—Return to step 6 and recheck.

DTC P0963: Problem in A/T Clutch Pressure Control Solenoid Valve A

2005-2006 Models

NOTE:
- Record all freeze data and review General Troubleshooting Information (see page 14-8) before you troubleshoot.
- This code is caused by an electrical circuit problem and cannot be caused by a mechanical problem in the transmission.

1. Clear the DTC with the HDS.

2. Check that DTC P0963 recurs.

   Is DTC P0963 indicated?

   YES—Go to step 6.

   NO—Go to step 3.

3. Choose Clutch Pressure Control Solenoid Control in Miscellaneous Test Menu, and test the A/T clutch pressure control solenoid valve A with the HDS.

4. Drive with the A/T clutch pressure control solenoid valve A at 0.2 A in Clutch Pressure Control Solenoid Control menu.

5. Monitor the OBD status for P0963 in the DTCs/ Freeze Data in A/T Mode Menu for a pass/fail.

   Does the result indicate a failed?

   YES—Go to step 6.

   NO—Intermittent failure, the system is OK at this time. Check for poor connections or loose terminals at the A/T clutch pressure control solenoid valve A and PCM. If the tester indicates NOT COMPLETED, return to step 3 and recheck. ■

6. Turn the ignition switch OFF.

7. Disconnect the A/T clutch pressure control solenoid valve A connector.

8. Measure A/T clutch pressure control solenoid valve A resistance at the solenoid connector.

A/T CLUTCH PRESSURE CONTROL SOLENOID VALVE A CONNECTOR

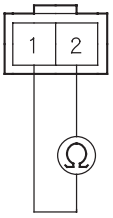

Terminal side of male terminals

   Is there 3— 10 Ω ?

   YES—Go to step 9.

   NO—Replace the A/T clutch pressure control solenoid valve A (see page 14-263), then go to step 10.

9. Check for continuity between A/T clutch pressure control solenoid valve A connector terminal No. 2 and body ground.

A/T CLUTCH PRESSURE CONTROL SOLENOID VALVE A CONNECTOR

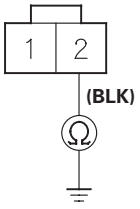

Wire side of female terminals

   Is there continuity?

   YES—Update the PCM if it does not have the latest software, or substitute a known-good PCM (see page 14-11), then recheck. If the symptom/ indication goes away with a known-good PCM, replace the original PCM. ■

   NO—Repair open in the wire between the A/T clutch pressure control solenoid valve A and ground (G101), or repair poor ground (G101), then go to step 10.

(cont'd)

DTC Troubleshooting (cont'd)

10. Clear the DTC with the HDS.

11. Test-drive the vehicle for several minutes in the D position through all five gears.

12. Monitor the OBD status for P0963 in the DTCs/ Freeze Data in A/T Mode Menu for a pass/fail.

    Does the result indicate a passed?

    YES—Troubleshooting is completed. ■

    NO—Return to step 1 and recheck.

DTC P0966: Problem in A/T Clutch Pressure Control Solenoid Valve B Circuit

2005-2006 Models

NOTE:
- Record all freeze data and review General Troubleshooting Information (see page 14-8) before you troubleshoot.
- This code is caused by an electrical circuit problem and cannot be caused by a mechanical problem in the transmission.

1. Clear the DTC with the HDS.

2. Check that DTC P0966 recurs.

   Is DTC P0966 indicated?

   YES—Go to step 6.

   NO—Go to step 3.

3. Choose Clutch Pressure Control Solenoid Control in Miscellaneous Test Menu, and test the A/T clutch pressure control solenoid valve B with the HDS.

4. Drive with the A/T clutch pressure control solenoid valve B at 1.0 A in Clutch Pressure Control Solenoid Control menu.

5. Monitor the OBD status for P0966 in the DTCs/ Freeze Data in A/T Mode Menu for a pass/fail.

   Does the result indicate a failed?

   YES—Go to step 6.

   NO—Intermittent failure, the system is OK at this time. Check for poor connections and loose terminals at the A/T clutch pressure control solenoid valve B and PCM. If the tester indicates NOT COMPLETED, return to step 3 and recheck. ■

6. Turn the ignition switch OFF.

7. Disconnect the A/T clutch pressure control solenoid valve B connector.

8. Measure A/T clutch pressure control solenoid valve B resistance at the solenoid connector.

A/T CLUTCH PRESSURE CONTROL SOLENOID VALVE B CONNECTOR

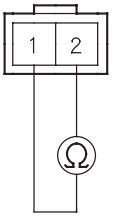

Terminal side of male terminals

Is there 3— 10 Ω ?

YES—Go to step 9.

NO—Replace the A/T clutch pressure control solenoid valve B (see page 14-265), then go to step 12.

9. Check for continuity between A/T clutch pressure control solenoid valve B connector terminal No. 2 and body ground.

A/T CLUTCH PRESSURE CONTROL SOLENOID VALVE B CONNECTOR

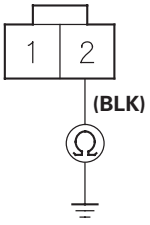

Wire side of female terminals

Is there continuity?

YES—Go to step 10.

NO—Repair open in the wire between the A/T clutch pressure control solenoid valve B and ground (G101), or repair poor ground (G101), then go to step 12.

(cont'd)

DTC Troubleshooting (cont'd)

10. Turn the ignition switch ON (II).

11. Measure the voltage between A/T clutch pressure control solenoid valve B connector terminals No. 1 and No. 2.

A/T CLUTCH PRESSURE CONTROL SOLENOID VALVE B CONNECTOR

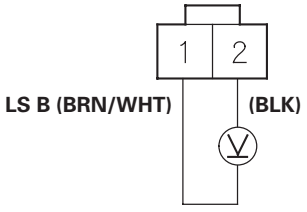

Wire side of female terminals

Is there about 11 V as the ignition switch is turned to the ON (II) position?

YES—Update the PCM if it does not have the latest software, or substitute a known-good PCM (see page 14-11), then recheck. If the symptom/indication goes away with a known-good PCM, replace the original PCM. ■

NO—Repair open or short in the wire between PCM connector terminal C15 and A/T clutch pressure control solenoid valve B, then go to step 12.

12. Clear the DTC with the HDS.

13. Test-drive the vehicle for several minutes in the D position through all five gears.

14. Monitor the OBD status for P0966 in the DTCs/Freeze Data in A/T Mode Menu for a pass/fail.

Does the result indicate a passed?

YES—Troubleshooting is completed. ■

NO—Return to step 1 and recheck.

DTC P0967: Problem in A/T Clutch Pressure Control Solenoid Valve B

2005-2006 Models

NOTE:
- Record all freeze data and review General Troubleshooting Information (see page 14-8) before you troubleshoot.
- This code is caused by an electrical circuit problem and cannot be caused by a mechanical problem in the transmission.

1. Clear the DTC with the HDS.

2. Check that DTC P0967 recurs.

   Is DTC P0967 indicated?

   YES—Go to step 6.

   NO—Go to step 3.

3. Choose Clutch Pressure Control Solenoid Control in Miscellaneous Test Menu, and test the A/T clutch pressure control solenoid valve B with the HDS.

4. Drive with the A/T clutch pressure control solenoid valve B at 0.2 A in Clutch Pressure Control Solenoid Control menu.

5. Monitor the OBD status for P0967 in the DTCs/ Freeze Data in A/T Mode Menu for a pass/fail.

   Does the result indicate a failed?

   YES—Go to step 6.

   NO—Intermittent failure, the system is OK at this time. Check for poor connections or loose terminals at the A/T clutch pressure control solenoid valve B and PCM. If the tester indicates NOT COMPLETED, return to step 3 and recheck. ■

6. Turn the ignition switch OFF.

7. Disconnect the A/T clutch pressure control solenoid valve B connector.

8. Measure A/T clutch pressure control solenoid valve B resistance at the solenoid connector.

A/T CLUTCH PRESSURE CONTROL SOLENOID VALVE B CONNECTOR

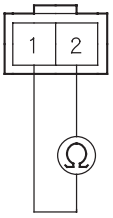

Terminal side of male terminals

Is there 3— 10 Ω ?

YES—Go to step 9.

NO—Replace the A/T clutch pressure control solenoid valve B (see page 14-265), then go to step 10.

9. Check for continuity between A/T clutch pressure control solenoid valve B connector terminal No. 2 and body ground.

A/T CLUTCH PRESSURE CONTROL SOLENOID VALVE B CONNECTOR

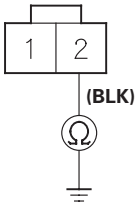

Wire side of female terminals

Is there continuity?

YES—Update the PCM if it does not have the latest software, or substitute a known-good PCM (see page 14-11), then recheck. If the symptom/ indication goes away with a known-good PCM, replace the original PCM. ■

NO—Repair open in the wire between the A/T clutch pressure control solenoid valve B and ground (G101), or repair poor ground (G101), then go to step 10.

(cont'd)

DTC Troubleshooting (cont'd)

10. Clear the DTC with the HDS.

11. Test-drive the vehicle for several minutes in the D position through all five gears.

12. Monitor the OBD status for P0967 in the DTCs/ Freeze Data in A/T Mode Menu for a pass/fail.

    Does the result indicate a passed?

    YES—Troubleshooting is completed. ■

    NO—Return to step 1 and recheck.

DTC P0970: Problem in A/T Clutch Pressure Control Solenoid Valve C Circuit

2005-2006 Models

NOTE:
- Record all freeze data and review General Troubleshooting Information (see page 14-8) before you troubleshoot.
- This code is caused by an electrical circuit problem and cannot be caused by a mechanical problem in the transmission.

1. Clear the DTC with the HDS.

2. Check that DTC P0970 recurs.

   Is DTC P0970 indicated?

   YES—Go to step 6.

   NO—Go to step 3.

3. Choose Clutch Pressure Control Solenoid Control in Miscellaneous Test Menu, and test the A/T clutch pressure control solenoid valve C with the HDS.

4. Drive with the A/T clutch pressure control solenoid valve C at 1.0 A in Clutch Pressure Control Solenoid Control menu.

5. Monitor the OBD status for P0970 in the DTCs/ Freeze Data in A/T Mode Menu for a pass/fail.

   Does the result indicate a failed?

   YES—Go to step 6.

   NO—Intermittent failure, the system is OK at this time. Check for poor connections or loose terminals at the A/T clutch pressure control solenoid valve C and PCM. If the tester indicates NOT COMPLETED, return to step 3 and recheck. ■

6. Turn the ignition switch OFF.

7. Disconnect the A/T clutch pressure control solenoid valve C connector.

8. Measure A/T clutch pressure control solenoid valve C resistance at the solenoid connector.

A/T CLUTCH PRESSURE CONTROL SOLENOID VALVE C CONNECTOR

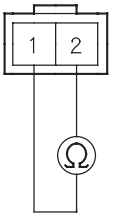

Terminal side of male terminals

Is there 3— 10 Ω ?

YES—Go to step 9.

NO—Replace the A/T clutch pressure control solenoid valve C (see page 14-265), then go to step 12.

9. Check for continuity between A/T clutch pressure control solenoid valve C connector terminal No. 2 and body ground.

A/T CLUTCH PRESSURE CONTROL SOLENOID VALVE C CONNECTOR

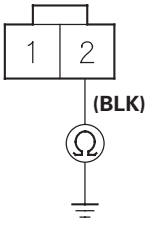

Wire side of female terminals

Is there continuity?

YES—Go to step 10.

NO—Repair open in the wire between the A/T clutch pressure control solenoid valve C and ground (G101), or repair poor ground (G101), then go to step 12.

(cont'd)

DTC Troubleshooting (cont'd)

10. Turn the ignition switch ON (II).

11. Measure the voltage between A/T clutch pressure control solenoid valve C connector terminals No. 1 and No. 2.

A/T CLUTCH PRESSURE CONTROL SOLENOID VALVE C CONNECTOR

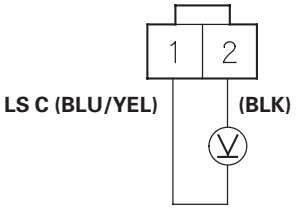

Wire side of female terminals

Is there about 11 V as the ignition switch is turned to the ON (II) position?

YES—Update the PCM if it does not have the latest software, or substitute a known-good PCM (see page 14-11), then recheck. If the symptom/indication goes away with a known-good PCM, replace the original PCM. ■

NO—Repair open or short in the wire between PCM connector terminal C7 and A/T clutch pressure control solenoid valve C, then go to step 12.

12. Clear the DTC with the HDS.

13. Test-drive the vehicle for several minutes in the D position through all five gears.

14. Monitor the OBD status for P0970 in the DTCs/Freeze Data in A/T Mode Menu for a pass/fail.

Does the result indicate a passed?

YES—Troubleshooting is completed. ■

NO—Return to step 1 and recheck.

DTC P0971: Problem in A/T Clutch Pressure Control Solenoid Valve C

2005-2006 Models

NOTE:
- Record all freeze data and review General Troubleshooting Information (see page 14-8) before you troubleshoot.
- This code is caused by an electrical circuit problem and cannot be caused by a mechanical problem in the transmission.

1. Clear the DTC with the HDS.

2. Check that DTC P0971 recurs.

   Is DTC P0971 indicated?

   YES—Go to step 6.

   NO—Go to step 3.

3. Choose Clutch Pressure Control Solenoid Control in Miscellaneous Test Menu, and test the A/T clutch pressure control solenoid valve C with the HDS.

4. Drive with the A/T clutch pressure control solenoid valve C at 0.2 A in Clutch Pressure Control Solenoid Control menu.

5. Monitor the OBD status for P0971 in the DTCs/ Freeze Data in A/T Mode Menu for a pass/fail.

   Does the result indicate a failed?

   YES—Go to step 6.

   NO—Intermittent failure, the system is OK at this time. Check for poor connections or loose terminals at the A/T clutch pressure control solenoid valve C and PCM. If the tester indicates NOT COMPLETED, return to step 3 and recheck. ■

6. Turn the ignition switch OFF.

7. Disconnect the A/T clutch pressure control solenoid valve C connector.

8. Measure A/T clutch pressure control solenoid valve C resistance at the solenoid connector.

A/T CLUTCH PRESSURE CONTROL SOLENOID VALVE C CONNECTOR

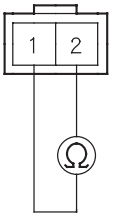

Terminal side of male terminals

Is there 3— 10 Ω ?

YES—Go to step 9.

NO—Replace the A/T clutch pressure control solenoid valve C (see page 14-265), then go to step 10.

9. Check for continuity between A/T clutch pressure control solenoid valve C connector terminal No. 2 and body ground.

A/T CLUTCH PRESSURE CONTROL SOLENOID VALVE C CONNECTOR

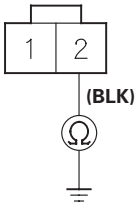

Wire side of female terminals

Is there continuity?

YES—Update the PCM if it does not have the latest software, or substitute a known-good PCM (see page 14-11), then recheck. If the symptom/ indication goes away with a known-good PCM, replace the original PCM. ■

NO—Repair open in the wire between the A/T clutch pressure control solenoid valve C and ground (G101), or repair poor ground (G101), then go to step 10.

(cont'd)

DTC Troubleshooting (cont'd)

10. Clear the DTC with the HDS.

11. Test-drive the vehicle for several minutes in the D position through all five gears.

12. Monitor the OBD status for P0971 in the DTCs/ Freeze Data in A/T Mode Menu for a pass/fail.

    Does the result indicate a passed?

    YES—Troubleshooting is completed. ■

    NO—Return to step 1 and recheck.

DTC P0973: Short in Shift Solenoid Valve A Circuit

2005-2006 Models

NOTE:
- Record all freeze data and review General Troubleshooting Information (see page 14-8) before you troubleshoot.
- This code is caused by an electrical circuit problem and cannot be caused by a mechanical problem in the transmission.

1. Clear the DTC with the HDS.

2. Start the engine, and shift to the D position.

3. Check that DTC P0973 recurs.

   Is DTC P0973 indicated?

   YES—Go to step 7.

   NO—Go to step 4.

4. Choose Shift Solenoid A in Miscellaneous Test Menu, and test the shift solenoid valve A with the HDS.

5. Start the engine, and shift to the D position.

6. Monitor the OBD status for P0973 in the DTCs/ Freeze Data in A/T Mode Menu for a pass/fail.

   Does the result indicate a failed?

   YES—Go to step 7.

   NO—Intermittent failure, the system is OK at this time. Check the BLU/BLK wire for an intermittent short to ground between shift solenoid valve A and PCM. If the tester indicates NOT COMPLETED, return to step 4 and recheck. ■

7. Turn the ignition switch OFF.

8. Jump the SCS line with the HDS.

9. Disconnect PCM connectors A (31P) and C (22P).

10. Measure the resistance between PCM connector terminals C6 and A9.

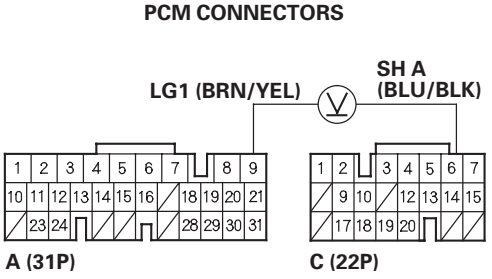

Wire side of female terminals

Is there less than 12 Ω ?

YES—Go to step 11.

NO—Update the PCM if it does not have the latest software, or substitute a known-good PCM (see page 14-11), then recheck. If the symptom/ indication goes away with a known-good PCM, replace the original PCM. ■

(cont'd)

DTC Troubleshooting (cont'd)

11. Disconnect the shift solenoid harness connector at the transmission housing.

12. Check for continuity between PCM connector terminals C6 and A9.

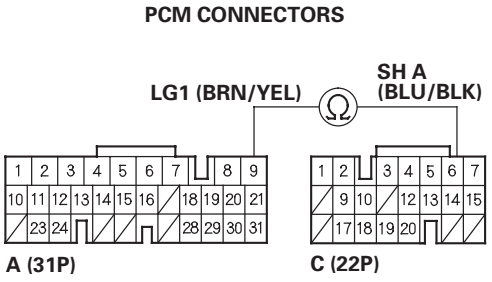

Wire side of female terminals

Is there continuity?

YES—Repair short to ground in the wire between PCM connector terminal C6 and the shift solenoid harness connector, then go to step 13.

NO—Check shift solenoid valve A, and check for a short in the shift solenoid harness in the transmission (see page 14-258). Replace shift solenoid valve A and/or shift solenoid harness, then go to step 13.

13. Clear the DTC with the HDS.

14. Start the engine, and shift to the D position.

15. Monitor the OBD status for P0973 in the DTCs/Freeze Data in A/T Mode Menu for a pass/fail.

Does the result indicate a passed?

YES—Troubleshooting is completed. ■

NO—Return to step 7 and recheck.

DTC P0974: Open in Shift Solenoid Valve A Circuit

2005-2006 Models

NOTE:
- Record all freeze data and review General Troubleshooting Information (see page 14-8) before you troubleshoot.
- This code is caused by an electrical circuit problem and cannot be caused by a mechanical problem in the transmission.

1. Clear the DTC with the HDS.

2. Start the engine in the P position.

3. Check that DTC P0974 recurs.

   Is DTC P0974 indicated?

   YES—Go to step 7.

   NO—Go to step 4.

4. Choose Shift Solenoid A in Miscellaneous Test Menu, and test the shift solenoid valve A with the HDS.

5. Start the engine in the P position.

6. Monitor the OBD status for P0974 in the DTCs/ Freeze Data in A/T Mode Menu for a pass/fail.

   Does the result indicate a failed?

   YES—Go to step 7.

   NO—Intermittent failure, the system is OK at this time. Check for poor connections or loose terminals at shift solenoid valve A and PCM. If the tester indicates NOT COMPLETED, return to step 4 and recheck. ■

7. Turn the ignition switch OFF.

8. Jump the SCS line with the HDS.

9. Disconnect PCM connectors A (31P) and C (22P).

10. Measure the resistance between PCM connector terminals C6 and A9.

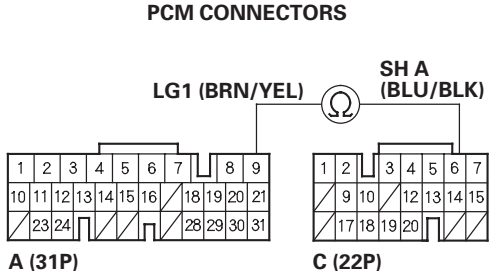

Wire side of female terminals

Is there 12—25 Ω ?

YES—Check for loose or poor connections at PCM connector terminal C6. If the connection is OK, update the PCM if it does not have the latest software, or substitute a known-good PCM (see page 14-11), then recheck. If the symptom/ indication goes away with a known-good PCM, replace the original PCM. ■

NO—Go to step 11.

(cont'd)

DTC Troubleshooting (cont'd)

11. Disconnect the shift solenoid harness connector at the transmission housing.

12. Measure the resistance between shift solenoid harness connector terminal No. 5 and body ground.

SHIFT SOLENOID HARNESS CONNECTOR

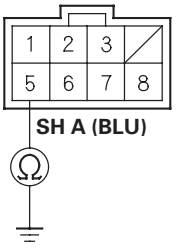

Terminal side of male terminals

Is there 12—25 Ω ?

YES—Repair open in the wire between PCM connector terminal C6 and the shift solenoid harness connector, then go to step 13.

NO—Check shift solenoid valve A, and check for an open in the shift solenoid harness in the transmission (see page 14-258). Replace shift solenoid valve A and/or shift solenoid harness, then go to step 13.

13. Clear the DTC with the HDS.

14. Start the engine in the P position.

15. Monitor the OBD status for P0974 in the DTCs/ Freeze Data in A/T Mode Menu for a pass/fail.

Does the result indicate a passed?

YES—Troubleshooting is completed. ■

NO—Return to step 7 and recheck.

DTC P0976: Short in Shift Solenoid Valve B Circuit

2005-2006 Models

NOTE:
- Record all freeze data and review General Troubleshooting Information (see page 14-8) before you troubleshoot.
- This code is caused by an electrical circuit problem and cannot be caused by a mechanical problem in the transmission.

1. Clear the DTC with the HDS.

2. Start the engine in the P position.

3. Check that DTC P0976 recurs.

   Is DTC P0976 indicated?

   YES—Go to step 7.

   NO—Go to step 4.

4. Choose Shift Solenoid B in Miscellaneous Test Menu, and test the shift solenoid valve B with the HDS.

5. Start the engine in the P position.

6. Monitor the OBD status for P0976 in the DTCs/ Freeze Data in A/T Mode Menu for a pass/fail.

   Does the result indicate a failed?

   YES—Go to step 7.

   NO—Intermittent failure, the system is OK at this time. Check the GRN/WHT wire for an intermittent short to ground between shift solenoid valve B and PCM. If the tester indicates NOT COMPLETED, return to step 4 and recheck. ■

7. Turn the ignition switch OFF.

8. Jump the SCS line with the HDS.

9. Disconnect PCM connectors A (31P) and C (22P).

10. Measure the resistance between PCM connector terminals C4 and A9.

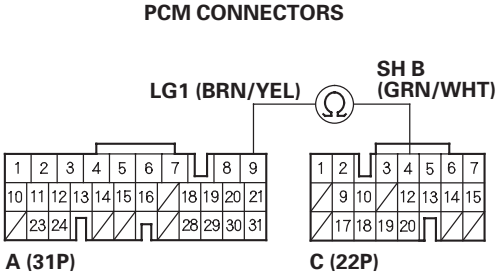

Wire side of female terminals

Is there less than 12 Ω ?

YES—Go to step 11.

NO—Update the PCM if it does not have the latest software, or substitute a known-good PCM (see page 14-11), then recheck. If the symptom/ indication goes away with a known-good PCM, replace the original PCM. ■

(cont'd)

DTC Troubleshooting (cont'd)

11. Disconnect the shift solenoid harness connector at the transmission housing.

12. Check for continuity between PCM connector terminals C4 and A9.

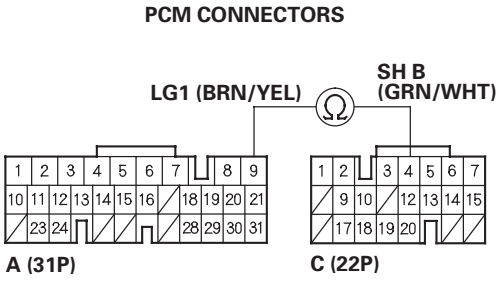

Wire side of female terminals

Is there continuity?

YES—Repair short to ground in the wire between PCM connector terminal C4 and the shift solenoid harness connector, then go to step 13.

NO—Check shift solenoid valve B, and check for a short in the shift solenoid harness in the transmission (see page 14-258). Replace shift solenoid valve B and/or shift solenoid harness, then go to step 13.

13. Clear the DTC with the HDS.

14. Start the engine in the P position.

15. Monitor the OBD status for P0976 in the DTCs/Freeze Data in A/T Mode Menu for a pass/fail.

Does the result indicate a passed?

YES—Troubleshooting is completed. ■

NO—Return to step 7 and recheck.

DTC P0977: Open in Shift Solenoid Valve B Circuit

2005-2006 Models

NOTE:
- Record all freeze data and review General Troubleshooting Information (see page 14-8) before you troubleshoot.
- This code is caused by an electrical circuit problem and cannot be caused by a mechanical problem in the transmission.

1. Clear the DTC with the HDS.

2. Test-drive the vehicle for several minutes in 1st, 2nd and 3rd gears in the D3 position.

3. Check that DTC P0977 recurs.

   Is DTC P0977 indicated?

   YES—Go to step 7.

   NO—Go to step 4.

4. Choose Shift Solenoid B in Miscellaneous Test Menu, and test the shift solenoid valve B with the HDS.

5. Test-drive the vehicle for several minutes in 1st, 2nd and 3rd gears in the D3 position.

6. Monitor the OBD status for P0977 in the DTCs/ Freeze Data in A/T Mode Menu for a pass/fail.

   Does the result indicate a failed?

   YES—Go to step 7.

   NO—Intermittent failure, the system is OK at this time. Check for poor connections or loose terminals at shift solenoid valve B and PCM. If the tester indicates NOT COMPLETED, return to step 4 and recheck. ■

7. Turn the ignition switch OFF.

8. Jump the SCS line with the HDS.

9. Disconnect PCM connectors A (31P) and C (22P).

10. Measure the resistance between PCM connector terminals C4 and A9.

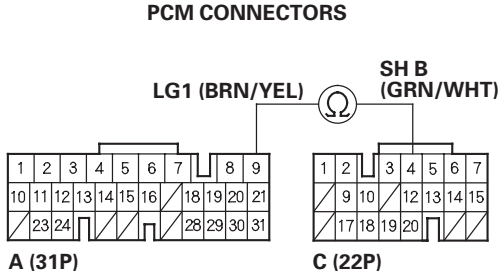

Wire side of female terminals

Is there 12—25 Ω ?

YES—Check for loose or poor connections at PCM connector terminal C4. If the connection is OK, update the PCM if it does not have the latest software, or substitute a known-good PCM (see page 14-11), then recheck. If the symptom/ indication goes away with a known-good PCM, replace the original PCM. ■

NO—Go to step 11.

(cont'd)

DTC Troubleshooting (cont'd)

11. Disconnect the shift solenoid harness connector at the transmission housing.

12. Measure the resistance between shift solenoid harness connector terminal No. 2 and body ground.

SHIFT SOLENOID HARNESS CONNECTOR

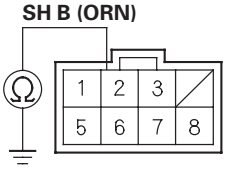

Terminal side of male terminals

Is there 12—25 Ω ?

YES—Repair open in the wire between PCM connector terminal C4 and the shift solenoid harness connector, then go to step 13.

NO—Check shift solenoid valve B, and check for an open in the shift solenoid harness in the transmission (see page 14-258). Replace shift solenoid valve B and/or shift solenoid harness, then go to step 13.

13. Clear the DTC with the HDS.

14. Test-drive the vehicle for several minutes in 1st, 2nd, and 3rd gears in the D3 position.

15. Monitor the OBD status for P0977 in the DTCs/ Freeze Data in A/T Mode Menu for a pass/fail.

Does the result indicate a passed?

YES—Troubleshooting is completed. ■

NO—Return to step 7 and recheck.

DTC P0979: Short in Shift Solenoid Valve C Circuit

2005-2006 Models

NOTE:
- Record all freeze data and review General Troubleshooting Information (see page 14-8) before you troubleshoot.
- This code is caused by an electrical circuit problem and cannot be caused by a mechanical problem in the transmission.

1. Clear the DTC with the HDS.

2. Start the engine, and shift to the D position.

3. Check that DTC P0979 recurs.

   Is DTC P0979 indicated?

   YES—Go to step 7.

   NO—Go to step 4.

4. Choose Shift Solenoid C in Miscellaneous Test Menu, and test the shift solenoid valve C with the HDS.

5. Start the engine, and shift to the D position.

6. Monitor the OBD status for P0979 in the DTCs/ Freeze Data in A/T Mode Menu for a pass/fail.

   Does the result indicate a failed?

   YES—Go to step 7.

   NO—Intermittent failure, the system is OK at this time. Check the GRN wire for an intermittent short to ground between shift solenoid valve C and PCM. If the tester indicates NOT COMPLETED, return to step 4 and recheck. ■

7. Turn the ignition switch OFF.

8. Jump the SCS line with the HDS.

9. Disconnect PCM connectors A (31P) and C (22P).

10. Measure the resistance between PCM connector terminals C2 and A9.

PCM CONNECTORS

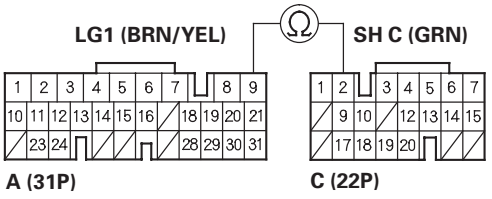

Wire side of female terminals

Is there less than 12 Ω ?

YES—Go to step 11.

NO—Update the PCM if it does not have the latest software, or substitute a known-good PCM (see page 14-11), then recheck. If the symptom/ indication goes away with a known-good PCM, replace the original PCM. ■

(cont'd)

DTC Troubleshooting (cont'd)

11. Disconnect the shift solenoid harness connector at the transmission housing.

12. Check for continuity between PCM connector terminals C2 and A9.

PCM CONNECTORS

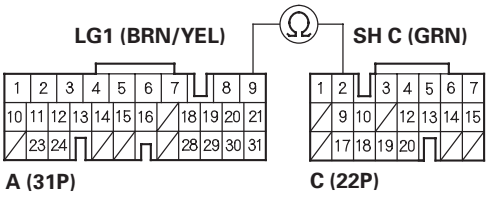

Wire side of female terminals

Is there continuity?

YES—Repair short to ground in the wire between PCM connector terminal C2 and the shift solenoid harness connector, then go to step 13.

NO—Check shift solenoid valve C, and check for a short in the shift solenoid harness in the transmission (see page 14-258). Replace shift solenoid valve C and/or shift solenoid harness, then go to step 13.

13. Clear the DTC with the HDS.

14. Start the engine, and shift to the D position.

15. Monitor the OBD status for P0979 in the DTCs/Freeze Data in A/T Mode Menu for a pass/fail.

Does the result indicate a passed?

YES—Troubleshooting is completed. ■

NO—Return to step 7 and recheck.

DTC P0980: Open in Shift Solenoid Valve C Circuit

2005-2006 Models

NOTE:
- Record all freeze data and review General Troubleshooting Information (see page 14-8) before you troubleshoot.
- This code is caused by an electrical circuit problem and cannot be caused by a mechanical problem in the transmission.

1. Clear the DTC with the HDS.

2. Start the engine in the P position.

3. Check that DTC P0980 recurs.

   Is DTC P0980 indicated?

   YES—Go to step 7.

   NO—Go to step 4.

4. Choose Shift Solenoid C in Miscellaneous Test Menu, and test the shift solenoid valve C with the HDS.

5. Start the engine in the P position.

6. Monitor the OBD status for P0980 in the DTCs/ Freeze Data in A/T Mode Menu for a pass/fail.

   Does the result indicate a failed?

   YES—Go to step 7.

   NO—Intermittent failure, the system is OK at this time. Check for poor connections or loose terminals at shift solenoid valve C and PCM. If the tester indicates NOT COMPLETED, return to step 4 and recheck. ■

7. Turn the ignition switch OFF.

8. Jump the SCS line with the HDS.

9. Disconnect PCM connectors A (31P) and C (22P).

10. Measure the resistance between PCM connector terminals C2 and A9.

PCM CONNECTORS

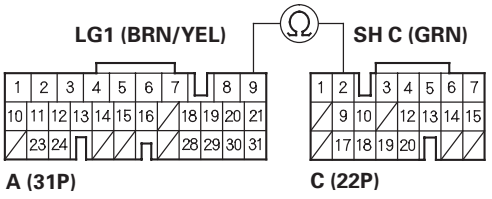

Wire side of female terminals

Is there 12—25 Ω ?

YES—Check for loose or poor connections at PCM connector terminal C2. If the connection is OK, update the PCM if it does not have the latest software, or substitute a known-good PCM (see page 14-11), then recheck. If the symptom/ indication goes away with a known-good PCM, replace the original PCM. ■

NO—Go to step 11.

(cont'd)

DTC Troubleshooting (cont'd)

11. Disconnect the shift solenoid harness connector at the transmission housing.

12. Measure the resistance between shift solenoid harness connector terminal No. 1 and body ground.

SHIFT SOLENOID HARNESS CONNECTOR

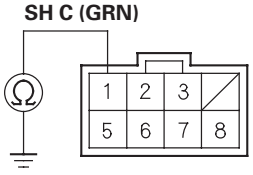

Terminal side of male terminals

Is there 12—25 Ω ?

YES—Repair open in the wire between PCM connector terminal C2 and the shift solenoid harness connector, then go to step 13.

NO—Check shift solenoid valve C, and check for an open in the shift solenoid harness in the transmission (see page 14-258). Replace shift solenoid valve C and/or shift solenoid harness, then go to step 13.

13. Clear the DTC with the HDS.

14. Start the engine in the P position.

15. Monitor the OBD status for P0980 in the DTCs/ Freeze Data in A/T Mode Menu for a pass/fail.

Does the result indicate a passed?

YES—Troubleshooting is completed. ■

NO—Return to step 7 and recheck.

DTC P0982: Short in Shift Solenoid Valve D Circuit

2005-2006 Models

NOTE:
- Record all freeze data and review General Troubleshooting Information (see page 14-8) before you troubleshoot.
- This code is caused by an electrical circuit problem and cannot be caused by a mechanical problem in the transmission.

1. Clear the DTC with the HDS.

2. Start the engine, and shift the transmission in 2nd gear in the M position.

3. Check that DTC P0982 recurs.

   Is DTC P0982 indicated?

   YES—Go to step 7.

   NO—Go to step 4.

4. Choose Shift Solenoid D in Miscellaneous Test Menu, and test the shift solenoid valve D with the HDS.

5. Start the engine, and shift the transmission in 2nd gear in the M position.

6. Monitor the OBD status for P0982 in the DTCs/ Freeze Data in A/T Mode Menu for a pass/fail.

   Does the result indicate a failed?

   YES—Go to step 7.

   NO—Intermittent failure, the system is OK at this time. Check the GRN/RED wire for an intermittent short to ground between shift solenoid valve D and PCM. If the tester indicates NOT COMPLETED, return to step 4 and recheck. ■

7. Turn the ignition switch OFF.

8. Jump the SCS line with the HDS.

9. Disconnect PCM connectors A (31P) and C (22P).

10. Measure the resistance between PCM connector terminals C5 and A9.

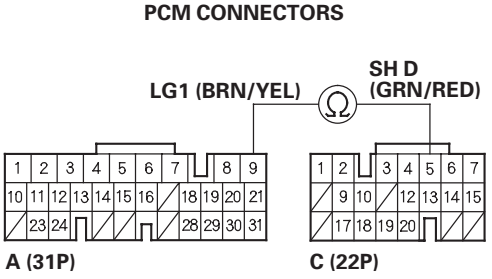

Wire side of female terminals

Is there less than 12 Ω ?

YES—Go to step 11.

NO—Update the PCM if it does not have the latest software, or substitute a known-good PCM (see page 14-11), then recheck. If the symptom/ indication goes away with a known-good PCM, replace the original PCM. ■

(cont'd)

DTC Troubleshooting (cont'd)

11. Disconnect the shift solenoid harness connector at the transmission housing.

12. Check for continuity between PCM connector terminals C5 and A9.

PCM CONNECTORS

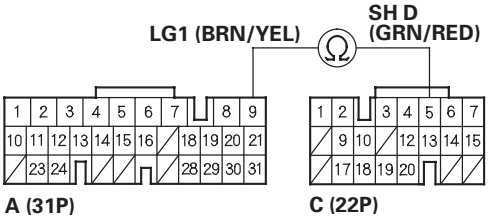

Wire side of female terminals

Is there continuity?

YES—Repair short to ground in the wire between PCM connector terminal C5 and the shift solenoid harness connector, then go to step 13.

NO—Check shift solenoid valve D, and check for a short in the shift solenoid harness in the transmission (see page 14-258). Replace shift solenoid valve D and/or shift solenoid harness, then go step 13.

13. Clear the DTC with the HDS.

14. Start the engine, and shift the transmission in 2nd gear in the M position.

15. Monitor the OBD status for P0982 in the DTCs/ Freeze Data in A/T Mode Menu for a pass/fail.

Does the result indicate a passed?

YES—Troubleshooting is completed. ■

NO—Return to step 7 and recheck.

DTC P0983: Open in Shift Solenoid Valve D Circuit

2005-2006 Models

NOTE:
- Record all freeze data and review General Troubleshooting Information (see page 14-8) before you troubleshoot.
- This code is caused by an electrical circuit problem and cannot be caused by a mechanical problem in the transmission.

1. Clear the DTC with the HDS.

2. Start the engine in the P position.

3. Check that DTC P0983 recurs.

   Is DTC P0983 indicated?

   YES—Go to step 7.

   NO—Go to step 4.

4. Choose Shift Solenoid D in Miscellaneous Test Menu, and test the shift solenoid valve D with the HDS.

5. Start the engine in the P position.

6. Monitor the OBD status for P0983 in the DTCs/ Freeze Data in A/T Mode Menu for a pass/fail.

   Does the result indicate a failed?

   YES—Go to step 7.

   NO—Intermittent failure, the system is OK at this time. Check for poor connections or loose terminals at shift solenoid valve D and PCM. If the tester indicates NOT COMPLETED, return to step 4 and recheck. ■

7. Turn the ignition switch OFF.

8. Jump the SCS line with the HDS.

9. Disconnect PCM connectors A (31P) and C (22P).

10. Measure the resistance between PCM connector terminals C5 and A9.

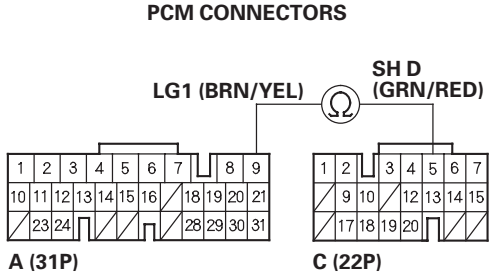

Wire side of female terminals

Is there 12—25 Ω ?

YES—Check for loose or poor connections at PCM connector terminal C5. If the connection is OK, update the PCM if it does not have the latest software, or substitute a known-good PCM (see page 14-11), then recheck. If the symptom/ indication goes away with a known-good PCM, replace the original PCM. ■

NO—Go to step 11.

(cont'd)

DTC Troubleshooting (cont'd)

11. Disconnect the shift solenoid harness connector at the transmission housing.

12. Measure the resistance between shift solenoid harness connector terminal No. 8 and body ground.

SHIFT SOLENOID HARNESS CONNECTOR

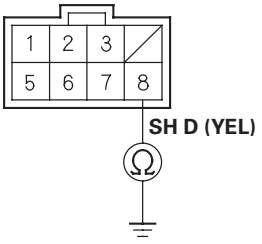

Terminal side of male terminals

Is there 12—25 Ω ?

YES—Repair open in the wire between PCM connector terminal C5 and the shift solenoid harness connector, then go to step 13.

NO—Check shift solenoid valve D, and check for an open in the shift solenoid harness in the transmission (see page 14-258). Replace shift solenoid valve D and/or shift solenoid harness, then go to step 13.

13. Clear the DTC with the HDS.

14. Start the engine in the P position.

15. Monitor the OBD status for P0983 in the DTCs/ Freeze Data in A/T Mode Menu for a pass/fail.

Does the result indicate a passed?

YES—Troubleshooting is completed. ■

NO—Return to step 7 and recheck.

DTC P0985: Short in Shift Solenoid Valve E Circuit

2005-2006 Models

NOTE:
- Record all freeze data and review General Troubleshooting Information (see page 14-8) before you troubleshoot.
- This code is caused by an electrical circuit problem and cannot be caused by a mechanical problem in the transmission.

1. Clear the DTC with the HDS.

2. Start the engine in the P position.

3. Check that DTC P0985 recurs.

   Is DTC P0985 indicated?

   YES—Go to step 7.

   NO—Go to step 4.

4. Choose Shift Solenoid E in Miscellaneous Test Menu, and test the shift solenoid valve E with the HDS.

5. Start the engine in the P position.

6. Monitor the OBD status for P0982 in the DTCs/ Freeze Data in A/T Mode Menu for a pass/fail.

   Does the result indicate a failed?

   YES—Go to step 7.

   NO—Intermittent failure, the system is OK at this time. Check the YEL wire for an intermittent short to ground between the shift solenoid valve E and PCM. If the tester indicates NOT COMPLETED, return to step 4 and recheck. ■

7. Turn the ignition switch OFF.

8. Jump the SCS line with the HDS.

9. Disconnect PCM connectors A (31P) and C (22P).

10. Measure the resistance between PCM connector terminals C3 and A9.

PCM CONNECTORS

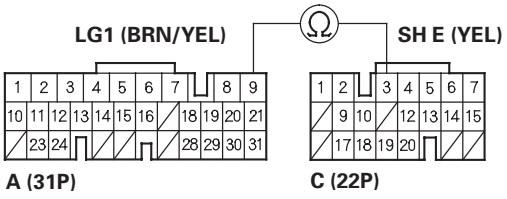

Wire side of female terminals

Is there less than 12 Ω ?

YES—Go to step 11.

NO—Update the PCM if it does not have the latest software, or substitute a known-good PCM (see page 14-11), then recheck. If the symptom/ indication goes away with a known-good PCM, replace the original PCM. ■

(cont'd)

DTC Troubleshooting (cont'd)

11. Disconnect the shift solenoid harness connector at the transmission housing.

12. Check for continuity between PCM connector terminals C3 and A9.

PCM CONNECTORS

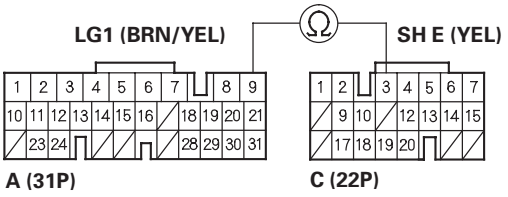

Wire side of female terminals

Is there continuity?

YES—Repair short to ground in the wire between PCM connector terminal C3 and the shift solenoid harness connector, then go to step 13.

NO—Check shift solenoid valve E, and check for a short in the shift solenoid harness in the transmission (see page 14-258). Replace shift solenoid valve E and/or shift solenoid harness, then go to step 13.

13. Clear the DTC with the HDS.

14. Start the engine in the P position.

15. Monitor the OBD status for P0985 in the DTCs/Freeze Data in A/T Mode Menu for a pass/fail.

Does the result indicate a passed?

YES—Troubleshooting is completed. ■

NO—Return to step 7 and recheck.

DTC P0986: Open in Shift Solenoid Valve E Circuit

2005-2006 Models

NOTE:
- Record all freeze data and review General Troubleshooting Information (see page 14-8) before you troubleshoot.
- This code is caused by an electrical circuit problem and cannot be caused by a mechanical problem in the transmission.

1. Clear the DTC with the HDS.

2. Start the engine, and shift the transmission in 2nd gear in the M position.

3. Check that DTC P0986 recurs.

   Is DTC P0986 indicated?

   YES—Go to step 7.

   NO—Go to step 4.

4. Choose Shift Solenoid E in Miscellaneous Test Menu, and test the shift solenoid valve E with the HDS.

5. Start the engine, and shift the transmission in 2nd gear in the M position.

6. Monitor the OBD status for P0986 in the DTCs/ Freeze Data in A/T Mode Menu for a pass/fail.

   Does the result indicate a failed?

   YES—Go to step 7.

   NO—Intermittent failure, the system is OK at this time. Check for poor connections or loose terminals at shift solenoid valve E and PCM. If the tester indicates NOT COMPLETED, return to step 4 and recheck. ■

7. Turn the ignition switch OFF.

8. Jump the SCS line with the HDS.

9. Disconnect PCM connectors A (31P) and C (22P).

10. Measure the resistance between PCM connector terminals C3 and A9.

PCM CONNECTORS

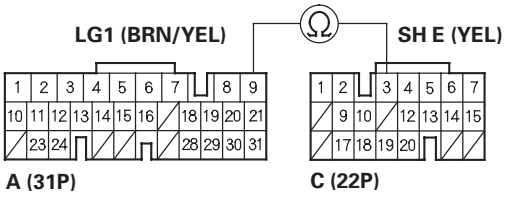

Wire side of female terminals

Is there 12—25 Ω ?

YES—Check for loose or poor connections at PCM connector terminal C3. If the connection is OK, update the PCM if it does not have the latest software, or substitute a known-good PCM (see page 14-11), then recheck. If the symptom/ indication goes away with a known-good PCM, replace the original PCM. ■

NO—Go to step 11.

(cont'd)

DTC Troubleshooting (cont'd)

11. Disconnect the shift solenoid harness connector at the transmission housing.

12. Check for continuity between shift solenoid harness connector terminal No. 3 and body ground.

SHIFT SOLENOID HARNESS CONNECTOR

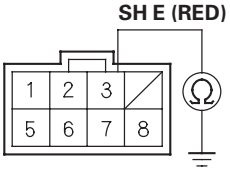

Terminal side of male terminals

Is there 12—25 Ω ?

YES—Repair open in the wire between PCM connector terminal C3 and the shift solenoid harness connector, then go to step 13.

NO—Check shift solenoid valve E, and check for an open in the shift solenoid harness in the transmission (see page 14-258). Replace shift solenoid valve E and/or shift solenoid harness, then go to step 13.

13. Clear the DTC with the HDS.

14. Start the engine, and shift the transmission in 2nd gear in the M position.

15. Monitor the OBD status for P0986 in the DTCs/ Freeze Data in A/T Mode Menu for a pass/fail.

Does the result indicate a passed?

YES—Troubleshooting is completed. ■

NO—Return to step 7 and recheck.

DTC P1730: Problem in Shift Control System:

- Shift Solenoid Valves A or D Stuck OFF
- Shift Solenoid Valve B Stuck ON
- Shift Valves A, B, or D Stuck

2005-2006 Models

NOTE: Record all freeze data and review General Troubleshooting Information (see page 14-8) before you troubleshoot.

1. Warm up the engine to normal operating temperature (the radiator fan comes on).

2. Make sure that the transmission is filled to the proper level, and check for fluid leaks.

3. Drain the ATF (see step 3 on page 14-272) through a strainer. Inspect the strainer for metal debris or excessive clutch material.

   Does the strainer contain metal debris or excessive clutch material?

   YES—Replace the transmission. ■

   NO—Replace the ATF (see step 4 on page 14-272) then go to step 4.

4. Clear the DTC with the HDS.

5. Test-drive the vehicle in the D position through all five gears at speeds over 12 mph (20 km/h) for more than 20 seconds, then slow down to a stop.

6. Retest-drive the vehicle in the D position through all five gears at speeds over 12 mph (20 km/h) for more than 20 seconds, then slow down to a stop.

7. Monitor the OBD status for P1730 in the DTCs/ Freeze Data in A/T Mode Menu for a pass/fail.

   Does the result indicate a failed?

   YES—Go to step 8.

   NO—Intermittent failure, the system is OK at this time. If the tester indicates NOT COMPLETED, return to step 5 and recheck. ■

8. Clear the DTC with the HDS.

9. Choose Shift Solenoid A in Miscellaneous Test Menu, and check that the shift solenoid valve A operates with the HDS.

   Is a clicking sound heard?

   YES—Go to step 10.

   NO—Replace shift solenoid valve A (see page 14-260), then go to step 15.

10. Choose Shift Solenoid B in Miscellaneous Test Menu, and check that the shift solenoid valve B operates with the HDS.

    Is a clicking sound heard?

    YES—Go to step 11.

    NO—Replace shift solenoid valve B (see page 14-260), then go to step 15.

11. Choose Shift Solenoid D in Miscellaneous Test Menu, and check that the shift solenoid valve D operates with the HDS.

    Is a clicking sound heard?

    YES—Go to step 12.

    NO—Replace shift solenoid valve D (see page 14-260), then go to step 15.

12. Test-drive the vehicle in the D position through all five gears at speeds over 12 mph (20 km/h) for more than 20 seconds, then slow down to a stop.

13. Retest-drive the vehicle in the D position through all five gears at speeds over 12 mph (20 km/h) for more than 20 seconds, then slow down to a stop.

14. Monitor the OBD status for P1730 in the DTCs/ Freeze Data in A/T Mode Menu for a pass/fail.

    Does the result indicate a failed?

    YES—Repair hydraulic system related with shift valves A, B, and D, or replace the transmission, then go to step 15.

    NO—Intermittent failure, the system is OK at this time. If the tester indicates NOT COMPLETED, return to step 12 and recheck. ■

(cont'd)

DTC Troubleshooting (cont'd)

15. Clear the DTC with the HDS.

16. Test-drive the vehicle in the D position through all five gears at speeds over 12 mph (20 km/h) for more than 20 seconds, then slow down to a stop.

17. Retest-drive the vehicle in the D position through all five gears at speeds over 12 mph (20 km/h) for more than 20 seconds, then slow down to a stop.

18. Monitor the OBD status for P1730 in the DTCs/ Freeze Data in A/T Mode Menu for a pass/fail.

    Does the result indicate a passed?

    YES—Troubleshooting is completed. ■

    NO—Return to step 8 and recheck.

DTC P1731: Problem in Shift Control System:

- Shift Solenoid Valve E Stuck ON
- Shift Valve E Stuck
- A/T Clutch Pressure Control Solenoid Valve A Stuck OFF

2005-2006 Models

NOTE: Record all freeze data and review General Troubleshooting Information (see page 14-8) before you troubleshoot.

1. Warm up the engine to normal operating temperature (the radiator fan comes on).

2. Make sure that the transmission is filled to the proper level, and check for fluid leaks.

3. Drain the ATF (see step 3 on page 14-272) through a strainer. Inspect the strainer for metal debris or excessive clutch material.

   Does the strainer contain metal debris or excessive clutch material?

   YES—Replace the transmission. ■

   NO—Replace the ATF (see step 4 on page 14-272) then go to step 4.

4. Clear the DTC with the HDS.

5. Test-drive the vehicle in the D position through all five gears at speeds over 12 mph (20 km/h) for more than 20 seconds, then slow down to a stop.

6. Retest-drive the vehicle in the D position through all five gears at speeds over 12 mph (20 km/h) for more than 20 seconds, then slow down to a stop.

7. Monitor the OBD status for P1731 in the DTCs/ Freeze Data in A/T Mode Menu for a pass/fail.

   Does the result indicate a failed?

   YES—Go to step 8.

   NO—Intermittent failure, the system is OK at this time. If the tester indicates NOT COMPLETED, return to step 5 and recheck. ■

8. Clear the DTC with the HDS.

9. Choose Shift Solenoid E in Miscellaneous Test Menu, and check that the shift solenoid valve E operates with the HDS.

   Is a clicking sound heard?

   YES—Go to step 10.

   NO—Replace shift solenoid valve E (see page 14-260), then go to step 12.

10. Choose Clutch Pressure Control (Linear) Solenoid A in Miscellaneous Test Menu, and test the A/T clutch pressure control solenoid valve A with the HDS.

    Is the system OK?

    YES—Intermittent failure, the system is OK at this time. If the tester indicates NOT COMPLETED, return to step 10 and recheck. ■

    NO—Follow the instructions indicated on the HDS by the tester result, but if the tester has not determined the cause of the failure, go to step 11. If any part was replaced, go to step 12.

11. Inspect A/T clutch pressure control solenoid valve A (see page 14-262).

    Dose the A/T clutch pressure control solenoid valve A work properly?

    YES—Repair hydraulic system related with shift valve E, or replace the transmission, then go to step 12.

    NO—Replace A/T clutch pressure control solenoid valve A (see page 14-263), then go to step 12.

(cont'd)

DTC Troubleshooting (cont'd)

12. Clear the DTC with the HDS.

13. Test-drive the vehicle in the D position through all five gears at speeds over 12 mph (20 km/h) for more than 20 seconds, then slow down to a stop.

14. Retest-drive the vehicle in the D position through all five gears at speeds over 12 mph (20 km/h) for more than 20 seconds, then slow down to a stop.

15. Monitor the OBD status for P1731 in the DTCs/ Freeze Data in A/T Mode Menu for a pass/fail.

    Does the result indicate a passed?

    YES—Troubleshooting is completed. ■

    NO—Return to step 8 and recheck.

DTC P1732: Problem in Shift Control System:

- Shift Solenoid Valves B or C Stuck ON
- Shift Valves B or C Stuck

2005-2006 Models

NOTE: Record all freeze data and review General Troubleshooting Information (see page 14-8) before you troubleshoot.

1. Warm up the engine to normal operating temperature (the radiator fan comes on).

2. Make sure that the transmission is filled to the proper level, and check for fluid leaks.

3. Drain the ATF (see step 3 on page 14-272) through a strainer. Inspect the strainer for metal debris or excessive clutch material.

   Does the strainer contain metal debris or excessive clutch material?

   YES—Replace the transmission. ■

   NO—Replace the ATF (see step 4 on page 14-272) then go to step 4.

4. Clear the DTC with the HDS.

5. Test-drive the vehicle in the D position through all five gears at speeds over 12 mph (20 km/h) for more than 20 seconds, then slow down to a stop.

6. Retest-drive the vehicle in the D position through all five gears at speeds over 12 mph (20 km/h) for more than 20 seconds, then slow down to a stop.

7. Monitor the OBD status for P1732 in the DTCs/ Freeze Data in A/T Mode Menu for a pass/fail.

   Does the result indicate a failed?

   YES—Go to step 8.

   NO—Intermittent failure, the system is OK at this time. If the tester indicates NOT COMPLETED, return to step 5 and recheck. ■

8. Clear the DTC with the HDS.

9. Choose Shift Solenoid B in Miscellaneous Test Menu, and check that shift solenoid valve B operates with the HDS.

   Is a clicking sound heard?

   YES—Go to step 10.

   NO—Replace shift solenoid valve B (see page 14-260), then go to step 14.

10. Choose Shift Solenoid C in Miscellaneous Test Menu, and check that the shift solenoid valve C operates with the HDS.

    Is a clicking sound heard?

    YES—Go to step 11.

    NO—Replace shift solenoid valve C (see page 14-260), then go to step 14.

11. Test-drive the vehicle in the D position through all five gears at speeds over 12 mph (20 km/h) for more than 20 seconds, then slow down to a stop.

12. Retest-drive the vehicle in the D position through all five gears at speeds over 12 mph (20 km/h) for more than 20 seconds, then slow down to a stop.

13. Monitor the OBD status for P1732 in the DTCs/ Freeze Data in A/T Mode Menu for a pass/fail.

    Does the result indicate a failed?

    YES—Repair hydraulic system related with shift valves B and C, or replace the transmission, then go to step 14.

    NO—Intermittent failure, the system is OK at this time. If the tester indicates NOT COMPLETED, return to step 11 and recheck. ■

(cont'd)

DTC Troubleshooting (cont'd)

14. Clear the DTC with the HDS.

15. Test-drive the vehicle in the D position through all five gears at speeds over 12 mph (20 km/h) for more than 20 seconds, then slow down to a stop.

16. Retest-drive the vehicle in the D position through all five gears at speeds over 12 mph (20 km/h) for more than 20 seconds, then slow down to a stop.

17. Monitor the OBD status for P1732 in the DTCs/ Freeze Data in A/T Mode Menu for a pass/fail.

    Does the result indicate a passed?

    YES—Troubleshooting is completed. ■

    NO—Return to step 8 and recheck.

DTC P1733: Problem in Shift Control System:

- Shift Solenoid Valve D Stuck ON
- Shift Valve D Stuck
- A/T Clutch Pressure Control Solenoid Valve C Stuck OFF

2005-2006 Models

NOTE: Record all freeze data and review General Troubleshooting Information (see page 14-8) before you troubleshoot.

1. Warm up the engine to normal operating temperature (the radiator fan comes on).

2. Make sure that the transmission is filled to the proper level, and check for fluid leaks.

3. Drain the ATF (see step 3 on page 14-272) through a strainer. Inspect the strainer for metal debris or excessive clutch material.

   Does the strainer contain metal debris or excessive clutch material?

   YES—Replace the transmission. ■

   NO—Replace the ATF (see step 4 on page 14-272) then go to step 4.

4. Clear the DTC with the HDS.

5. Test-drive the vehicle in the D position through all five gears at speeds over 12 mph (20 km/h) for more than 20 seconds, then slow down to a stop.

6. Retest-drive the vehicle in the D position through all five gears at speeds over 12 mph (20 km/h) for more than 20 seconds, then slow down to a stop.

7. Monitor the OBD status for P1733 in the DTCs/ Freeze Data in A/T Mode Menu for a pass/fail.

   Does the result indicate a failed?

   YES—Go to step 8.

   NO—Intermittent failure, the system is OK at this time. If the tester indicates NOT COMPLETED, return to step 5 and recheck. ■

8. Clear the DTC with the HDS.

9. Choose Shift Solenoid D in Miscellaneous Test Menu, and check that the shift solenoid valve D operates with the HDS.

   Is a clicking sound heard?

   YES—Go to step 10.

   NO—Replace shift solenoid valve D (see page 14-260), then go to step 15.

10. Choose Clutch Pressure Control (Linear) Solenoid C in Miscellaneous Test Menu, and test the A/T clutch pressure control solenoid valve C with the HDS.

    Is the system OK?

    YES—Go to step 11.

    NO—Follow the instructions indicated on the HDS by the tester result, but if the tester has not determined the cause of the failure, go to step 14. If any part was replaced, go to step 15.

11. Test-drive the vehicle in the D position through all five gears at speeds over 12 mph (20 km/h) for more than 20 seconds, then slow down to a stop.

12. Retest-drive the vehicle in the D position through all five gears at speeds over 12 mph (20 km/h) for more than 20 seconds, then slow down to a stop.

13. Monitor the OBD status for P1733 in the DTCs/ Freeze Data in A/T Mode Menu for a pass/fail.

    Does the result indicate a failed?

    YES—Repair hydraulic system related with shift valve D, or replace the transmission, then go to step 15.

    NO—Intermittent failure, the system is OK at this time. If the tester indicates NOT COMPLETED, return to step 11 and recheck. ■

(cont'd)

DTC Troubleshooting (cont'd)

14. Inspect A/T clutch pressure control solenoid valve C (see page 14-264).

    Does the A/T clutch pressure control solenoid valve C work properly?

    YES—Repair hydraulic system related with shift valve D, or replace the transmission, then go to step 15.

    NO—Replace A/T clutch pressure control solenoid valve C (see page 14-265), then go to step 15.

15. Clear the DTC with the HDS.

16. Test-drive the vehicle in the D position through all five gears at speeds over 12 mph (20 km/h) for more than 20 seconds, then slow down to a stop.

17. Retest-drive the vehicle in the D position through all five gears at speeds over 12 mph (20 km/h) for more than 20 seconds, then slow down to a stop.

18. Monitor the OBD status for P1733 in the DTCs/Freeze Data in A/T Mode Menu for a pass/fail.

    Does the result indicate a passed?

    YES—Troubleshooting is completed. ■

    NO—Return to step 8 and recheck.

DTC P1734: Problem in Shift Control System:

- Shift Solenoid Valves B or C Stuck OFF
- Shift Valves B or C Stuck

2005-2006 Models

NOTE: Record all freeze data and review General Troubleshooting Information (see page 14-8) before you troubleshoot.

1. Warm up the engine to normal operating temperature (the radiator fan comes on).

2. Make sure that the transmission is filled to the proper level, and check for fluid leaks.

3. Drain the ATF (see step 3 on page 14-272) through a strainer. Inspect the strainer for metal debris or excessive clutch material.

   Does the strainer contain metal debris or excessive clutch material?

   YES—Replace the transmission. ■

   NO—Replace the ATF (see step 4 on page 14-272) then go to step 4.

4. Clear the DTC with the HDS.

5. Test-drive the vehicle in the D position through all five gears at speeds over 12 mph (20 km/h) for more than 20 seconds, then slow down to a stop.

6. Retest-drive the vehicle in the D position through all five gears at speeds over 12 mph (20 km/h) for more than 20 seconds, then slow down to a stop.

7. Monitor the OBD status for P1734 in the DTCs/ Freeze Data in A/T Mode Menu for a pass/fail.

   Does the result indicate a failed?

   YES—Go to step 8.

   NO—Intermittent failure, the system is OK at this time, if the tester indicates NOT COMPLETED, return to step 5 and recheck. ■

8. Clear the DTC with the HDS.

9. Choose Shift Solenoid B in Miscellaneous Test Menu, and check that the shift solenoid valve B operates with the HDS.

   Is a clicking sound heard?

   YES—Go to step 10.

   NO—Replace shift solenoid valve B (see page 14-260), then go to step 14.

10. Choose Shift Solenoid C in Miscellaneous Test Menu, and check that the shift solenoid valve C operates with the HDS.

    Is a clicking sound heard?

    YES—Go to step 11.

    NO—Replace shift solenoid valve C (see page 14-260), then go to step 14.

11. Test-drive the vehicle in the D position through all five gears at speeds over 12 mph (20 km/h) for more than 20 seconds, then slow down to a stop.

12. Retest-drive the vehicle in the D position through all five gears at speeds over 12 mph (20 km/h) for more than 20 seconds, then slow down to a stop.

13. Monitor the OBD status for P1734 in the DTCs/ Freeze Data in A/T Mode Menu for a pass/fail.

    Does the result indicate a failed?

    YES—Repair hydraulic system related with shift valves B and C, or replace the transmission, then go to step 14.

    NO—Intermittent failure, the system is OK at this time. If the tester indicates NOT COMPLETED, return to step 11 and recheck. ■

(cont'd)

DTC Troubleshooting (cont'd)

14. Clear the DTC with the HDS.

15. Test-drive the vehicle in the D position through all five gears at speeds over 12 mph (20 km/h) for more than 20 seconds, then slow down to a stop.

16. Retest-drive the vehicle in the D position through all five gears at speeds over 12 mph (20 km/h) for more than 20 seconds, then slow down to a stop.

17. Monitor the OBD status for P1734 in the DTCs/ Freeze Data in A/T Mode Menu for a pass/fail.

    Does the result indicate a passed?

    YES—Troubleshooting is completed. ■

    NO—Return to step 8 and recheck.

Road Test

Special Tools Required
Backprobe set 07SAZ-001000A (Two required)

1. Warm up the engine to normal operating temperature (the radiator fan comes on).

2. Apply the parking brake, and block both rear wheels. Start the engine, then shift to the D position while pressing the brake pedal. Press the accelerator pedal, and release it suddenly. The engine should not stall.

3. Repeat the same test in the D3 position.

4. Connect the HDS to the DLC (A), and go to the A/T data list; then go to step 7. If you don't have a HDS, go to step 5.

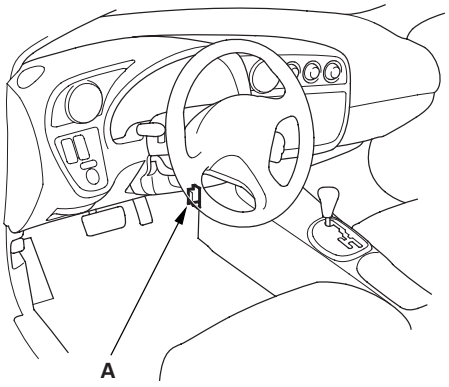

5. Remove the dashboard lower cover (A) under the glove box (B) to expose the PCM connectors (C).

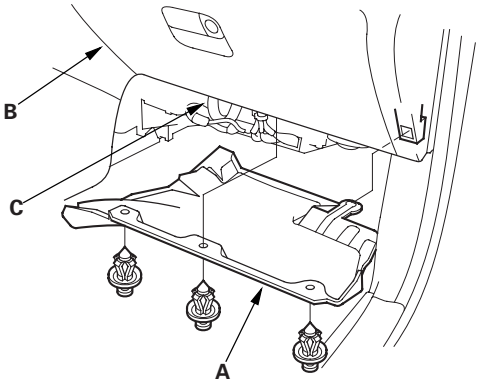

6. Connect a digital multimeter (A) and the special tools (B) to check voltage between PCM connector terminals A15 (+) and A24 (−) (2002-2004 models), A29 (+) and A9 (−) (2005-2006 models).

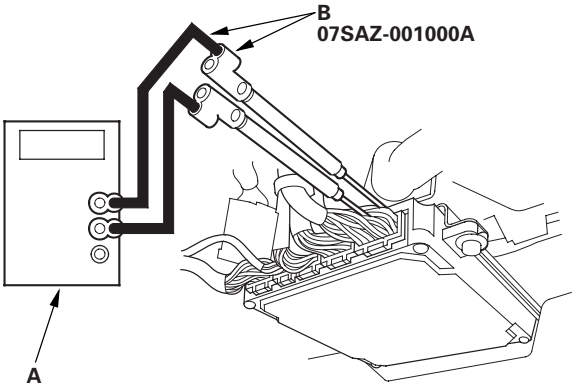

2002-2004 models:

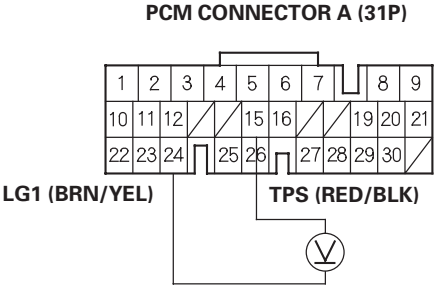

Wire side of female terminals

2005-2006 models:

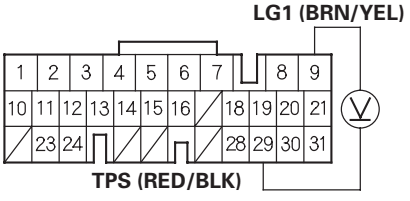

Wire side of female terminals

(cont'd)

Road Test (cont'd)

7. Test-drive the vehicle on a flat road in the D position, check for abnormal noise and clutch slippage. While driving, check that the shift points occur at the proper speeds by monitoring the throttle position sensor voltage and comparing your shift point speeds and voltage to those in the table. (The throttle position sensor voltage represents the throttle opening.)

D position
Upshift

Throttle Opening	Unit of Speed	1st → 2nd	2nd → 3rd	3rd → 4th	4th → 5th
Throttle position sensor voltage: 0.8 V	mph	9—12	20—23	29—33	39—44
	km/h	15—19	32—37	46—53	62—71
Throttle position sensor voltage: 2.25 V	mph	20—24	37—42	58—64	103—113
	km/h	32—38	60—68	94—103	165—182
Fully-opened throttle, throttle position sensor voltage: 4.5 V	mph	35—41	65—74	104—114	———
	km/h	57—65	105—118	168—185	———

Downshift

Throttle Opening	Unit of Speed	5th → 4th	4th → 3rd	3rd → 2nd	2nd → 1st
Throttle position sensor voltage: 0.8 V	mph	30—35	19—22	5—8 (3rd → 1st)	
	km/h	49—57	30—35	8—13 (3rd → 1st)	
Fully-opened throttle, throttle position sensor voltage: 4.5 V	mph	116—128	85—95	54—61	28—33
	km/h	187—206	137—153	87—98	44—52

Lock-up ON and OFF
(Schedule of shift solenoid valve E turned ON and OFF)

Throttle Opening	Unit of Speed	Lock-up ON	Lock-up OFF
Throttle position sensor voltage: 0.8 V	mph	48—55	47—53
	km/h	78—88	76—86
Throttle position sensor voltage: 2.25 V	mph	108—119	66—75
	km/h	174—191	107—120
Fully-opened throttle, throttle position sensor voltage: 4.5 V	mph	———	108—118
	km/h	———	173—190

8. Accelerate to about 35 mph (57 km/h) so the transmission is in 4th gear, then shift to 2nd gear. The vehicle should immediately begin slow down from engine braking.

9. Check for abnormal noise and clutch slippage in the R position. Accelerate from a stop at full throttle, and check for abnormal noise and clutch slippage.

10. Test in the P (Parking) Position.
Park the vehicle on a slope (about 16 °), apply the brake, and shift into the P position. Release the brake; the vehicle should not move.

NOTE: Always use the brake to hold the vehicle, when stopped on an incline in gear. Depending on the grade of the incline, the vehicle could roll backwards if the brake is released.

Stall Speed Test

1. Make sure the transmission fluid is filled to the proper level (see page 14-271).

2. Apply the parking brake, and block the front wheels.

3. Connect the HDS to the DLC, and start the engine.

4. Make sure the A/C switch is OFF.

5. After the engine has warmed up to normal operating temperature (the radiator fan comes on), shift to the D position.

6. Firmly press the brake pedal and accelerator pedal for 6 to 8 seconds, and note engine speed. Do not move the shift lever while raising engine speed.

7. Allow 2 minutes for cooling, then repeat the test in the R position.

   NOTE:
   - Do not test stall speed for more than 10 seconds at a time.
   - Stall speed tests should be used for diagnostic purposes only.
   - Stall speed should be the same in the D and R positions.
   - Do not do the stall speed test with the A/T pressure gauges installed.

   Stall Speed rpm
   Specification: 2,100 rpm
   Service Limit: 1,950—2,250 rpm

8. If the measurements are out of the service limit, problems and probable causes are listed in the table:

Problem	Probable causes
Stall speed rpm high in the D and R positions	• ATF pump output low • Clogged ATF strainer • Pressure regulator valve stuck • Slipping clutch
Stall speed rpm high in the R position	Slippage 4th clutch
Stall speed rpm low in the D and R positions	• Engine output low • Engine throttle valve closed • Torque converter one-way clutch slipping

Pressure Test

Special Tools Required
- A/T clutch pressure gauge set w/panel 07406-0020400 or 07406-0020401
- A/T pressure hose, 2,210 mm 07MAJ-PY4011A
- A/T pressure hose adapter 07MAJ-PY40120

1. Make sure the transmission fluid is filled to the proper level (see page 14-271).

2. Lift the vehicle up on a lift or apply the parking brake, block rear wheels, and raise the front of the vehicle. Make sure it is securely supported.

3. Allow the front wheels to rotate freely.

4. Connect the oil pressure gauge to the line pressure inspection hole (A). Do not allow dust or other foreign particles to enter the hole while connecting the gauge.

A/T OIL PRESSURE GAUGE SET W/PANEL 07406-0020400 or 07406-0020401

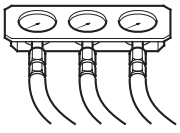

A/T PRESSURE HOSE, 2,210 mm 07MAJ-PY4011A (3 Required)

A/T PRESSURE HOSE ADAPTER 07MAJ-PY40120 (3 Required)

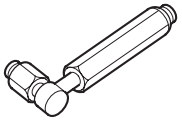

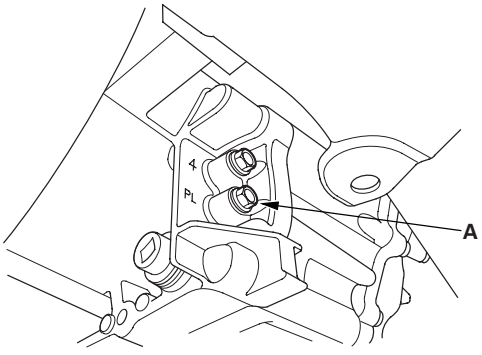

5. Warm up the engine (the radiator fan comes on). Turn off the engine, and connect the HDS to the DLC (A).

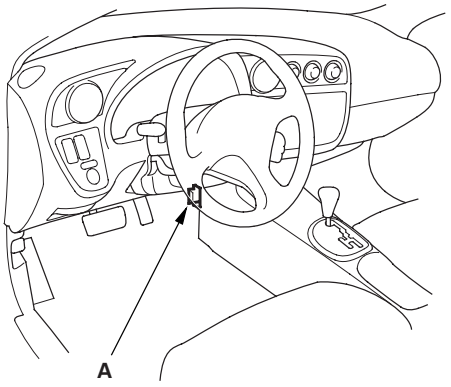

6. Start the engine, and run it at 2,000 rpm in the P or N position.

7. Measure line pressure at the line pressure inspection hole (A).

   NOTE: Higher pressure may be indicated if measurements are made in shift lever position other than the P or N position.

Pressure	Fluid Pressure	
	Standard	Service Limit
Line (A)	900—960 kPa (9.2—9.8 kgf/cm^2, 130—140 psi)	850 kPa (8.7 kgf/cm^2, 120 psi)

8. Turn the engine off, then disconnect the oil pressure gauge from the line pressure inspection hole.

9. Install the sealing bolt in the line pressure inspection hole with a new sealing washer, and tighten the bolt to 18 N·m (1.8 kgf·m, 13 lbf·ft). Do not reuse old sealing washer.

10. Connect the oil pressure gauge to the 1st clutch pressure inspection hole (B).

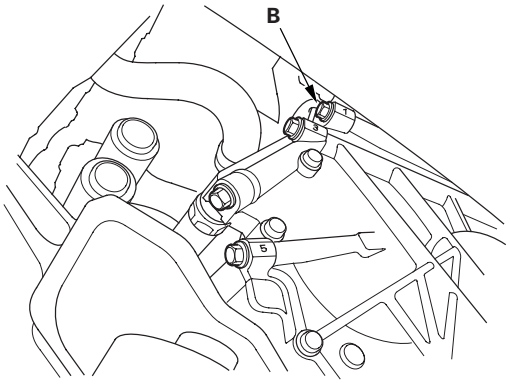

11. Remove the air cleaner housing, and connect the oil pressure gauge to the 2nd clutch pressure inspection hole (C). Then temporarity install the air cleaner housing.

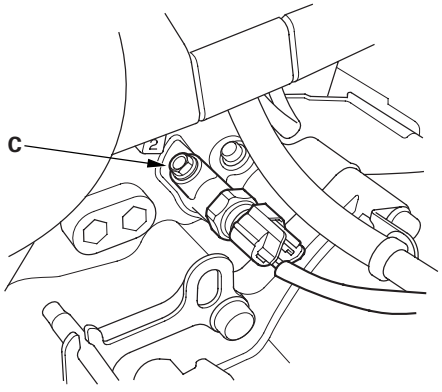

12. Start the engine, and shift into the M position.

13. Shift to 1st gear, and measure 1st clutch pressure at the 1st clutch pressure inspection hole (B) while holding engine speed at 2,000 rpm.

14. Shift up to 2nd gear, and measure 2nd clutch pressure at the 2nd clutch pressure inspection hole (C) while holding engine speed at 2,000 rpm.

Pressure	Fluid Pressure	
	Standard	Service Limit
1st clutch (B) 2nd clutch (C)	890—970 kPa (9.1—9.9 kgf/cm^2, 130—140 psi)	840 kPa (8.6 kgf/cm^2, 120 psi)

15. Turn the engine off, then disconnect the oil pressure gauges from the 1st clutch pressure and 2nd clutch pressure inspection holes.

16. Install the sealing bolts in the 1st clucth pressure and 2nd clutch pressure inspection holes with new sealing washers, and tighten the bolts to 18 N·m (1.8 kgf·m, 13 lbf·ft). Do not reuse old sealing washers.

(cont'd)

Pressure Test (cont'd)

17. Connect the oil pressure gauge to the 3rd clutch pressure inspection hole (D) and 5th clutch pressure inspection hole (F).

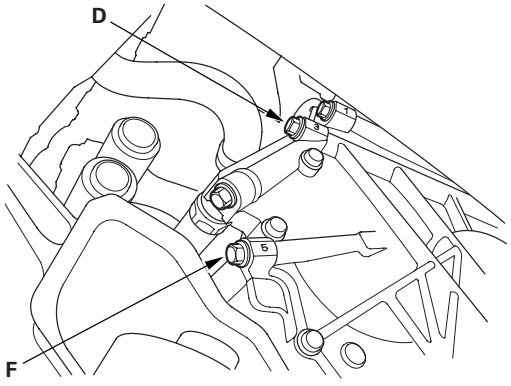

18. Connect the oil pressure gauge to the 4th clutch pressure inspection hole (E).

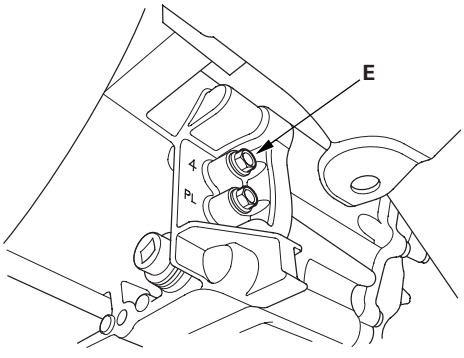

19. Start the engine with the transmission in the P position while pressing the brake pedal.

20. Shift to the M position, and release the brake pedal; the transmission is in 1st gear.

21. Press the accelerator pedal to increase the engine speed to 2,500 rpm, then shift to 2nd gear.

22. Release the accelerator padal to close fully the throttle over 5 seconds; the engine speed decrease to 1,000 rpm with the transmission in 2nd gear.

23. Press the accelerator pedal very slowly to increase the engine speed to 2,000 rpm over 5 seconds, and hold the accelerator. Shift to 3rd gear, and measure 3rd clutch pressure at the 3rd clutch pressure inspection hole (D) while holdding engine speed at 2,000 rpm.

24. Shift to 4th gear, and measure 4th clutch pressure at the 4th clutch pressure inspection hole (E) while holding engine speed at 2,000 rpm.

25. Shift to 5th gear, and measure 5th clutch pressure at the 5th clutch pressure inspection hole (F) while holding engine speed at 2,000 rpm.

Pressure	Fluid Pressure	
	Standard	Service Limit
3rd clutch (D) 4th clutch (E) 5th clutch (F)	890—970 kPa (9.1—9.9 kgf/cm^2, 130—140 psi)	840 kPa (8.6 kgf/cm^2, 120 psi)

26. Bring the engine back to an idle, then aplly the brake pedal to stop the wheels from rotating.

27. Shift to the R position, then release the brake pedal. Raise the engine speed to 2,000 rpm, and measure 4th clutch pressure at the 4th clutch pressure inspection hole (E).

Pressure	Fluid Pressure	
	Standard	Service Limit
4th clutch (E) in R	890—970 kPa (9.1—9.9 kgf/cm^2, 130—140 psi)	840 kPa (8.6 kgf/cm^2, 120 psi)

28. Turn the engine off, then disconnect the oil pressure gauges from the 3rd, 4th, and 5th clutch pressure inspection holes.

29. Install the sealing bolts in the 3rd, 4th, and 5th clutch pressure inspection holes with new sealing washers, and tighten the bolts to 18 Nm· (1.8 kgf·m, 13 lbf·ft). Do not reuse old sealing washers.

30. If the measurements are out of the service limit, problems and probable causes are listed in the table.

Problem	Probable causes
No or low line pressure	• Torque converter • ATF pump • Regulator valve • Torque converter check valve • Clogged ATF strainer
No or low 1st clutch pressure	• 1st clutch • O-rings
No or low 2nd clutch pressure	• 2nd clutch • O-rings
No or low 3rd clutch pressure	• 3rd clutch • O-rings
No or low 4th clutch pressure	• 4th clutch • O-rings
No or low 5th clutch pressure	• 5th clutch • O-rings
No or low 4th clutch pressure in the R position	• Servo valve • 4th clutch • O-rings

31. Install the air cleaner housing.

Shift Solenoid Valve Test

1. Connect the HDS to the DLC (A).

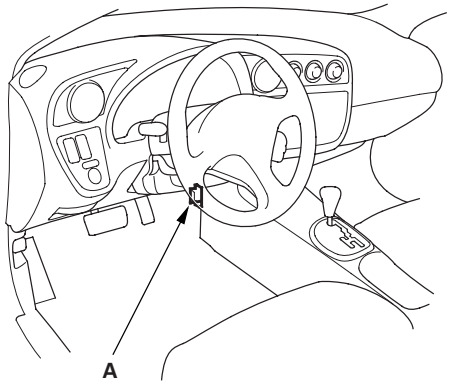

2. Choose Shift Solenoid A, B, C, D, and E in Miscellaneous Test Menu on the HDS.

3. Check that shift solenoid valve A, B, C, D, and E operate with the HDS. A clicking sound be heard.

4. Shift solenoid valves test has finished if the test results are OK.
   If no sound is heard, remove the shift solenoid valves and test.

5. Remove the drain plug (A), and drain the automatic transmission fluid (ATF).

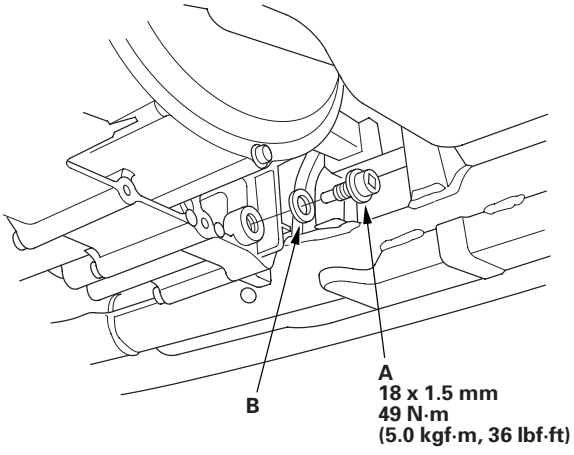

6. Reinstall the drain plug with a new sealing washer (B).

7. Place the transmission jack under the transmission, and lift it up to create clearance between the transmission and front subframe.

8. Disconnect the shift solenoid harness connector.

9. Remove the bolt (A) securing the bracket (B) of the ATF cooler inlet line (C) on the shift solenoid valve cover (D), and remove the line bolt (E) with sealing washers (F).

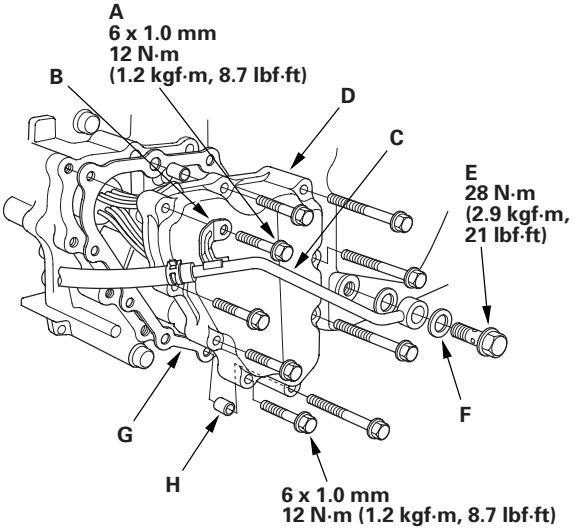

10. Remove the shift solenoid valve cover, gasket (G), and dowel pins (H).

11. Remove the bolt (A), and remove the shift solenoid harness connector (B).

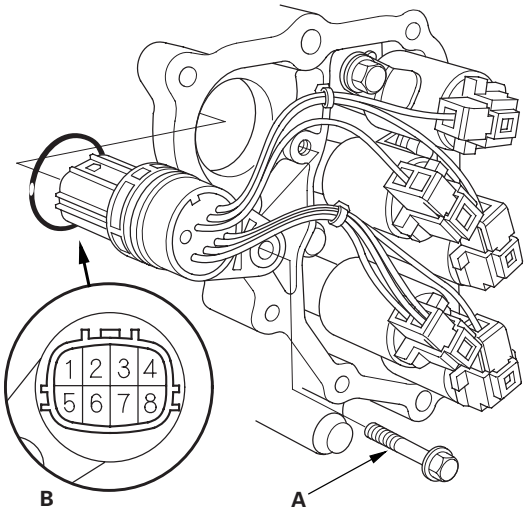

B
Terminal side of male terminals

A
6 x 1.0 mm
12 N·m (1.2 kgf·m, 8.7 lbf·ft)

12. Measure shift solenoid valves resistance between the shift solenoid harness connector terminals No. 1, No. 2, No. 3, No. 5, No. 8, and body ground.
    Shift solenoid valve A: No. 5 terminal (BLU)
    Shift solenoid valve B: No. 2 terminal (ORN)
    Shift solenoid valve C: No. 1 terminal (GRN)
    Shift solenoid valve D: No. 8 terminal (YEL)
    Shift solenoid valve E: No. 3 terminal (RED)

    Standard: 12—25 Ω

13. If the resistance is out of standard, disconnect the shift solenoid valve connector, and measure its resistance at the solenoid valve connector.
    Replace the shift solenoid valve if the resistance is out of standard.

14. Connect the battery positive terminal to the shift solenoid harness connector terminals, and connect the battery negative terminal to body ground individually. A clicking sound should be heard.

15. If no sound is heard, connect the battery positive terminal to the shift solenoid valve terminal, and check for a clicking sound.
    Replace the shift solenoid valve if no clicking sound is heard.

16. Replace the solenoid harness if the tests results are OK.

17. Install a new O-ring on the shift solenoid harness connector, and install the connector in the transmission housing.

18. Install the shift solenoid valve cover with a new gasket and dowel pins.

19. Install the ATF cooler inlet line with the line bolt and new sealing washers. Create clearance with the transmission jack between the transmission and the front subframe to tighten the line bolt with the torque wrench.

20. Install the bracket of the ATF cooler inlet line on the shift solenoid valve cover with the bolt.

21. Check the connector for rust, dirt, or oil, then connect the connector securely.

22. Remove the transmission jack.

23. Refill the transmission with ATF (see page 14-272).

Shift Solenoid Valve Replacement

1. Remove the drain plug (A), and drain the automatic transmission fluid (ATF).

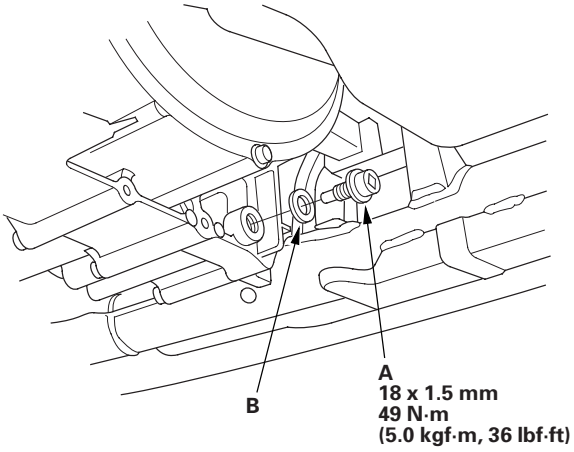

2. Reinstall the drain plug with a new sealing washer (B).

3. Place the transmission jack under the transmission, and lift it up to create clearance between the transmission and front subframe.

4. Remove the bolt (A) securing the bracket (B) of the ATF cooler inlet line (C) on the shift solenoid valve cover (D), and remove the line bolt (E) with sealing washers (F).

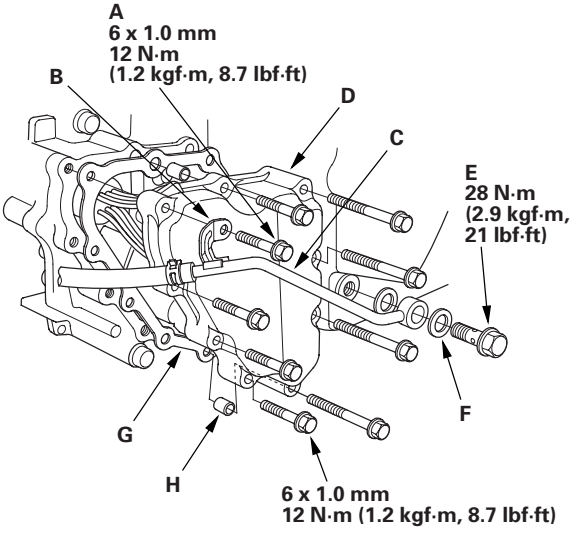

5. Remove the shift solenoid valve cover, gasket (G), and dowel pins (H).

6. Disconnect the shift solenoid valve connectors.

7. Remove the solenoid mounting bolts, and hold the shift solenoid valve body, then remove them. Do not hold the connector to remove.

8. Install the new O-rings (two per solenoid valve) (F) on the replacement solenoid valve.

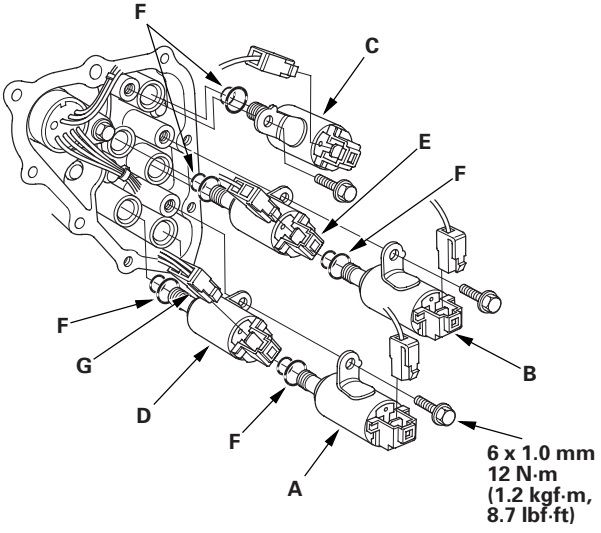

9. Install shift solenoid valve C, D, and E. While holding the shift solenoid valve body, be sure to install the solenoid valves until their mounting bolt brackets contact the servo body.

10. Install shift solenoid valve A and B. While holding the shift solenoid valve body, be sure to install the solenoid valves until their mounting bolt brackets contact the bracket of installed solenoid.

    NOTE: Do not install the shift solenoid valve A and B before installing the shift solenoid valve D and E. If solenoid valve A and B are installed before solenoid valves D and E, it may damage the hydraulic control system.

11. Connect the shift solenoid valve D connector (G) with the ATF temperature sensor.

12. Connect the solenoid valve A connector (BLU wire), solenoid valve B connector (ORN wire), solenoid valve C connector (GRN wire), and solenoid valve E connector (RED wire).

13. Install the shift solenoid valve cover with a new gasket and dowel pins.

14. Install the ATF cooler inlet line with the line bolt and new sealing washers. Create clearance with the transmission jack between the transmission and the front subframe to tighten the line bolt with the torque wrench.

15. Install the bracket of the ATF cooler inlet line on the shift solenoid valve cover with the bolt.

16. Remove the transmission jack.

17. Refill the transmission with ATF (see page 14-272).

A/T Clutch Pressure Control Solenoid Valve A Test

1. Remove the air cleaner housing.

2. Disconnect the A/T clutch pressure control solenoid valve A connector.

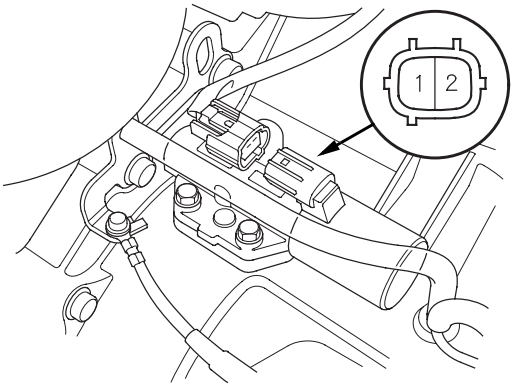

3. Measure A/T clutch pressure control solenoid valve A resistance between the solenoid valve A terminals No. 1 and No. 2.

   Standard: 3—10 Ω

4. If the resistance is out of standard, replace the A/T clutch pressure control solenoid valve A.

5. Connect the battery positive terminal to A/T clutch pressure control solenoid valve A connector terminal No. 1, and connect the battery negative terminal to terminal No. 2. A clicking sound should be heard.

6. If no sound is heard, remove the A/T clutch pressure control solenoid valve A.

7. Check the fluid passage of the A/T clutch pressure control solenoid valve for dust or dirt.

8. Connect A/T clutch pressure control solenoid valve A connector terminal No. 1 to the battery positive terminal, and connect terminal No. 2 to the battery negative terminal. Make sure the A/T clutch pressure control solenoid valve moves.

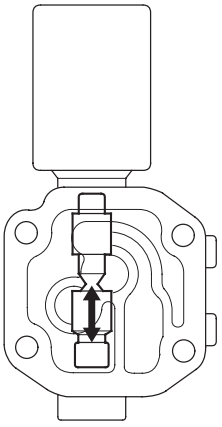

9. Disconnect one of the battery terminals and check for valve movement.

   NOTE: You can see valve movement through the fluid passage in the mounting surface of the A/T clutch pressure control solenoid valve A body.

10. If the valve binds or moves sluggishly, or if the solenoid valve does not operate, replace the A/T clutch pressure control solenoid valve A.

A/T Clutch Pressure Control Solenoid Valve A Replacement

1. Remove the air cleaner housing.

2. Disconnect the A/T clutch pressure control solenoid valve A connector.

3. Remove the mounting bolts and the A/T clutch pressure control solenoid valve A.

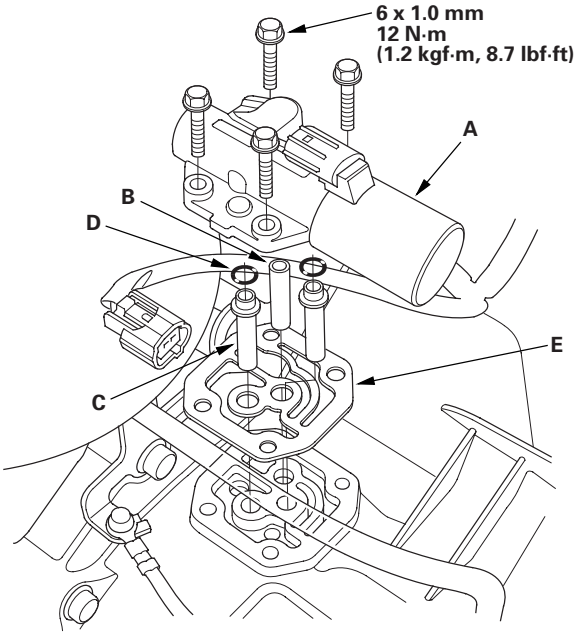

4. Remove the ATF pipe (B), ATF joint pipes (C), O-rings (D), and gasket (E).

5. Clean the mounting surface and fluid passage of the A/T clutch pressure control solenoid valve A and transmission housing.

6. Clean the filter of the ATF joint pipes.

7. Install the new gasket on the transmission housing, and install the ATF pipe and ATF joint pipes.

8. Install the new O-rings over the ATF joint pipes.

9. Install the new A/T clutch pressure control solenoid valve A.

10. Check the A/T clutch pressure control solenoid valve A connector for rust, dirt, or oil, and clean if necessary, then connect it securely.

11. Install the air cleaner housing.

A/T Clutch Pressure Control Solenoid Valve B and C Test

1. Remove the air cleaner housing.

2. Disconnect the A/T clutch pressure control solenoid valves B and C connectors.

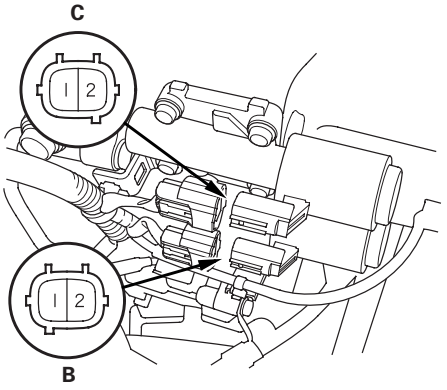

3. Measure A/T clutch pressure control solenoid valve B resistance between the solenoid valve B terminals No. 1 and No. 2, and measure A/T clutch pressure control solenoid valve C resistance between the solenoid valve C terminals No. 1 and No. 2.

   Standard: 3—10 Ω

4. If the resistance of either A/T clutch pressure control solenoid valve is out of standard, replace the A/T clutch pressure control solenoid valves B and C.

5. Connect the battery positive terminal to A/T clutch pressure control solenoid valves B and C connectors terminal No. 1, and connect the battery negative terminal to terminal No. 2. A clicking sound should be heard.

6. If no sound is heard, remove the A/T clutch pressure control solenoid valves B and C.

7. Check the fluid passage of the A/T clutch pressure control solenoid valve for dust or dirt.

8. Connect A/T clutch pressure control solenoid valves B and C connectors terminal No. 1 to the battery positive terminal, and connect terminal No. 2 to the battery negative terminal. Make sure the A/T clutch pressure control solenoid valves B and C move.

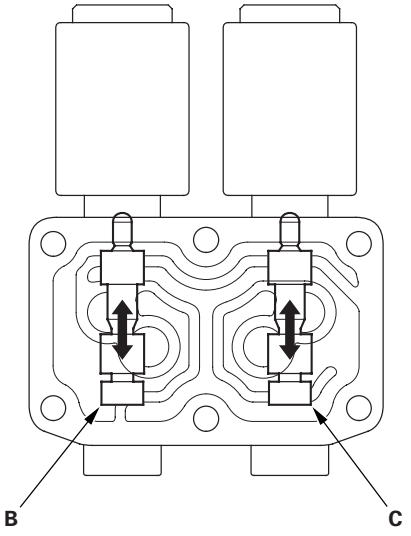

9. Disconnect one of the battery terminals, and check valve movement.

   NOTE: You can see valve movement through the fluid passage in the mounting surface of the A/T clutch pressure control solenoid valves B and C body.

10. If either valve binds or moves sluggishly, or if the solenoid valve does not operate, replace the A/T clutch pressure control solenoid valves B and C.

A/T Clutch Pressure Control Solenoid Valve B and C Replacement

1. Remove the air cleaner housing.

2. Disconnect the A/T clutch pressure control solenoid valves B and C connectors.

3. Remove the mounting bolts, harness clamp brackets (A), and the A/T clutch pressure control solenoid valves B and C.

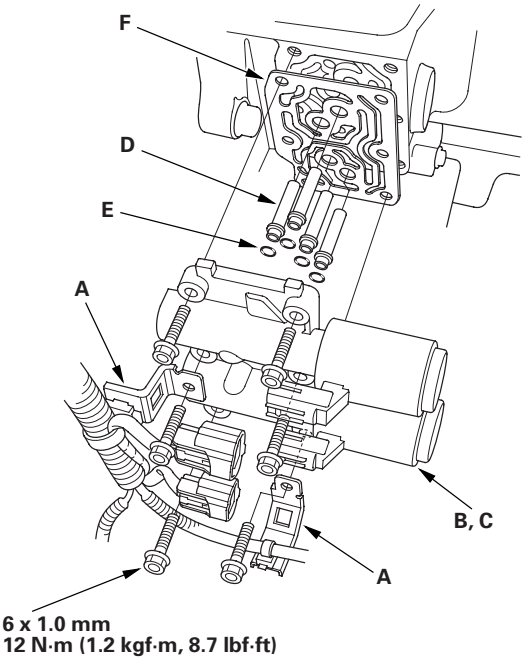

4. Remove the ATF joint pipes (D), O-rings (E), and gasket (F).

5. Clean the mounting surface and fluid passages of the A/T clutch pressure control solenoid valves B and C, and transmission housing.

6. Clean the filter of the ATF joint pipes.

7. Install the new gasket on the transmission housing, and install the ATF joint pipes.

8. Install the new O-rings over the ATF joint pipes.

9. Install the new A/T clutch pressure control solenoid valves B and C, and harness clamp brackets.

10. Check the A/T clutch pressure control solenoid valves B and C connectors for rust, dirt, or oil, and clean if necessary, then connect them securely.

11. Install the air cleaner housing.

Input Shaft (Mainshaft) and Output Shaft (Countershaft) Speed Sensor Replacement

1. Disconnect the input shaft (mainshaft) speed sensor connector and output shaft (countershaft) speed sensor connector.

2. Remove the input shaft (mainshaft) speed sensor (A) and output shaft (countershaft) speed sensor (B).

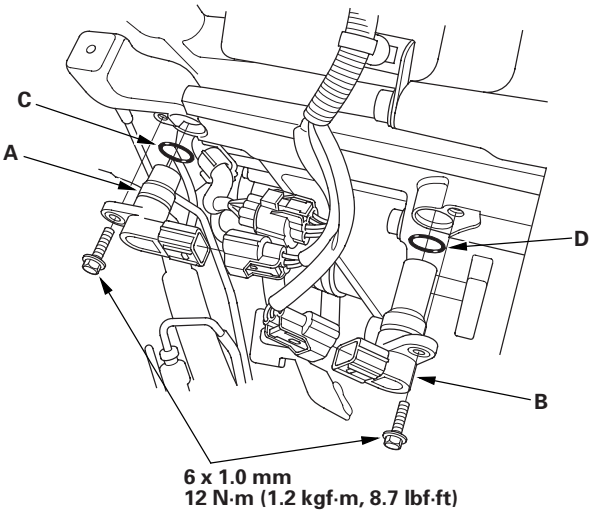

3. Install the new O-ring (C) on the input shaft (mainshaft) speed sensor, and install the input shaft (mainshaft) speed sensor in the transmission housing.

4. Install the new O-ring (D) on the output shaft (countershaft) speed sensor, and install the output shaft (countershaft) speed sensor in the transmission housing.

5. Check the connectors for rust, dirt, or oil, then connect the connectors securely.

2nd Clutch Transmission Fluid Pressure Switch Replacement

1. Remove the air cleaner housing.

2. Disconnect the connector from the 2nd clutch transmission fluid pressure switch (A).

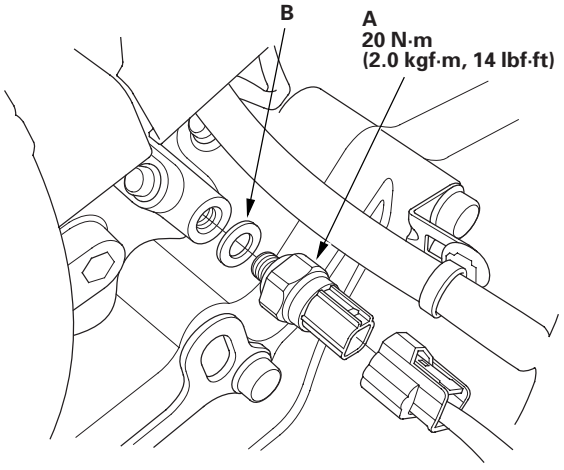

3. Remove the 2nd clutch transmission fluid pressure switch, then install a new one with a new sealing washer (B). Tighten the switch to the specified torque.

4. Reconnect the connector, making sure there is no water, oil, dust, or foreign particles inside the connector.

5. Install the air cleaner housing.

3rd Clutch Transmission Fluid Pressure Switch Replacement

1. Disconnect the connector from the 3rd clutch transmission fluid pressure switch (A).

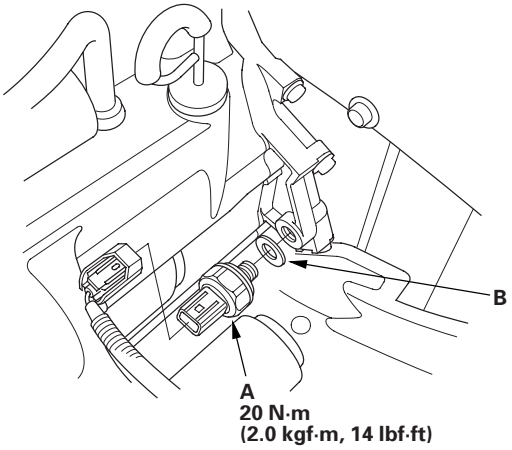

2. Remove the 3rd clutch transmission fluid pressure switch, then install a new one with a new sealing washer (B). Tighten the switch to the specified torque.

3. Reconnect the connector, making sure there is no water, oil, dust, or foreign particles inside the connector.

ATF Temperature Sensor Test/Replacement

1. Remove the drain plug (A), and drain the automatic transmission fluid (ATF).

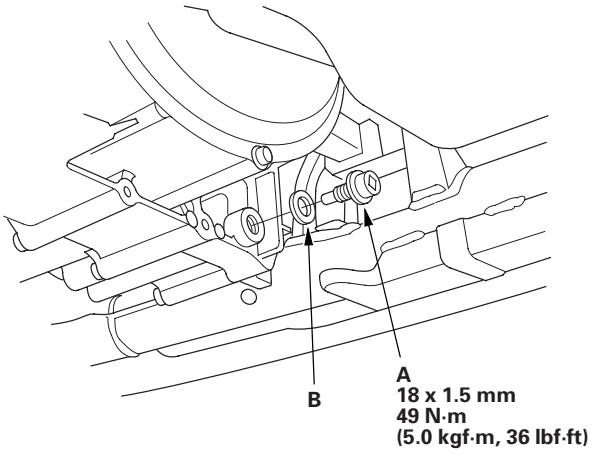

2. Reinstall the drain plug with a new sealing washer (B).

3. Place the transmission jack under the transmission, and lift it up to create clearance between the transmission and front subframe.

4. Disconnect the shift solenoid harness connector.

5. Remove the bolt (A) securing the bracket (B) of the ATF cooler inlet line (C) on the shift solenoid valve cover (D), and remove the line bolt (E) with sealing washers (F).

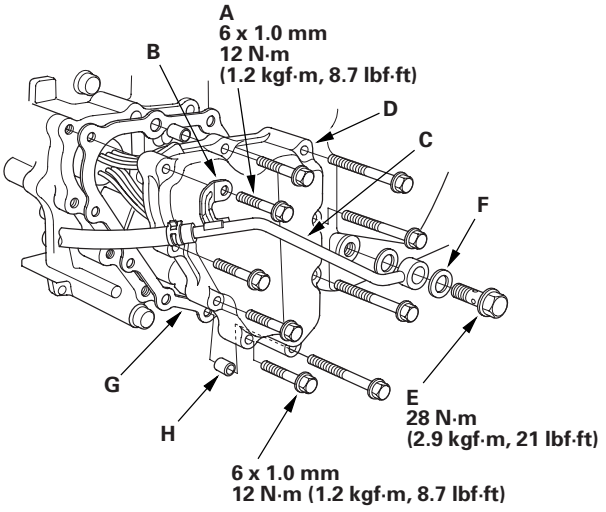

6. Remove the shift solenoid valve cover, gasket (G), and dowel pins (H).

7. Remove the bolt (A), and remove the shift solenoid harness connector (B).

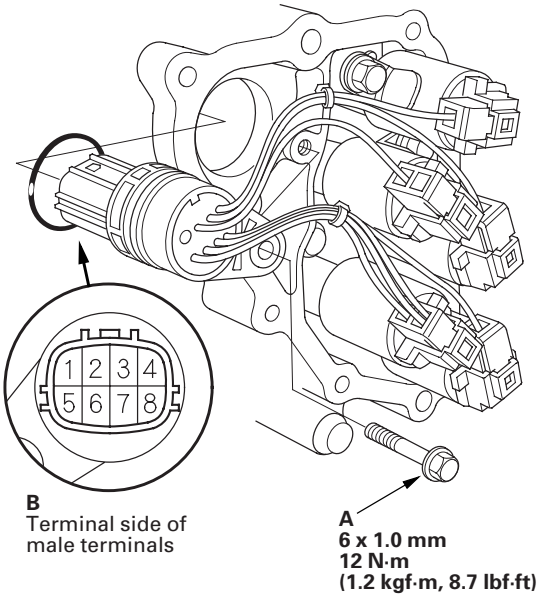

8. Measure ATF temperature sensor resistance between shift solenoid harness connector terminals No. 6 and No. 7.

   Standard: 50 Ω —25 k Ω

9. If the resistance is out of standard, replace the ATF temperature sensor with the solenoid harness. The ATF temperature sensor is not available separately.

10. Disconnect the connectors from the shift solenoid valves.

11. Connect the shift solenoid valve D connector with the ATF temperature sensor (F) on the new solenoid harness.

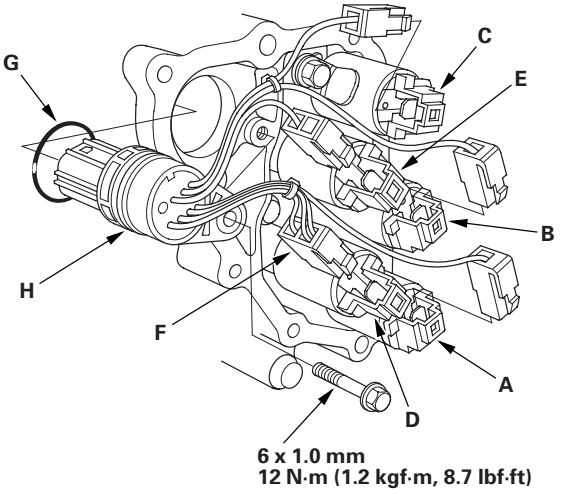

12. Connect the solenoid valve A connector (BLU wire), solenoid valve B connector (ORN wire), solenoid valve C connector (GRN wire), and solenoid valve E connector (RED wire).

13. Install the new O-ring (G) on the shift solenoid harness connector (H), and install the connector in the transmission housing.

14. Install the shift solenoid valve cover with the new gasket and dowel pins.

15. Install the ATF cooler inlet line with the line bolt and the new sealing washers. Create clearance with the jack between the transmission and the front subframe to tighten the line bolt with the torque wrench.

16. Install the bracket of the ATF cooler inlet line on the shift solenoid valve cover with the bolt.

17. Check the connector for rust, dirt, or oil, then connect the connector securely.

18. Remove the transmission jack.

19. Refill the transmission with ATF (see step 5 on page 14-272).

Transmission Gear Selection Switch Test

1. Remove the center console (see page 20-59).

2. Disconnect transmission gear selection switch/park pin switch connector.

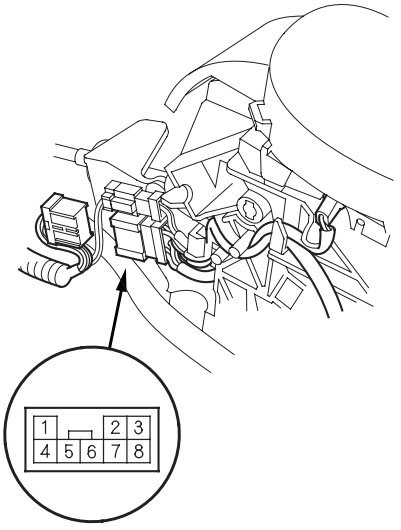

Terminal side of male terminals

3. Check for continuity between connector terminals No. 3 and No. 7.
   There should be continuity when shift lever in M position, and no continuity when shift lever in any position other than M.

4. Check for continuity between connector terminals No. 8 and No. 7.
   There should be continuity when shift lever pushed toward to upshift position (+), and no continuity with released shift lever to neutral position.

5. Check for continuity between connector terminals No. 2 and No. 7.

6. There should be continuity when shift lever pulled toward to downshift position (−), and no continuity with released shift lever to neutral position.

7. Replace the transmission gear selection switch/ park pin switch assembly if the switch test was failed.

Transmission Gear Selection Switch Replacement

1. Remove the center console (see page 20-59).

2. Disconnect transmission gear selection switch/park pin switch connector (A), then remove it from the shift lever bracket base.

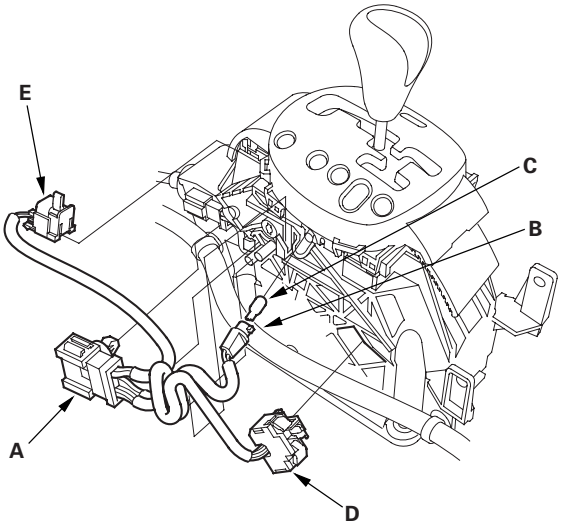

3. Remove the A/T gear position indicator panel light socket (B), then remove the indicator light bulb (C) from the socket.

4. Remove the transmission gear selection switch (D) and park pin switch (E), and install the new switches and connector.

5. Install the A/T gear position indicator panel light bulb in the bulb socket, then install the socket in the A/T gear position indicator panel.

6. Connect transmission gear selection switch/park pin switch connector.

7. Reinstall the center console (see page 20-59).

ATF Level Check

NOTE: Keep all foreign particles out of the transmission.

1. Warm up the engine to normal operating temperature (the radiator fan comes on).

2. Park the vehicle on level ground, and turn the engine off.

   NOTE: Check the fluid level within 60—90 seconds after turning the engine off.

3. Remove the dipstick (yellow loop) (A) from the transmission, and wipe it with a clean cloth.

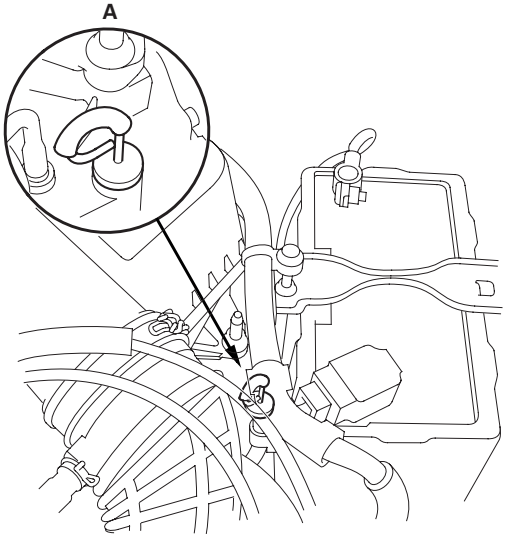

4. Insert the dipstick back into the transmission.

5. Remove the dipstick (A) and check the fluid level. It should be at upper mark (B).

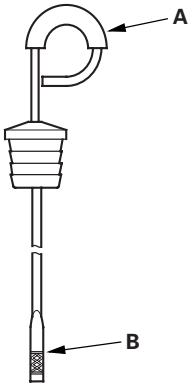

6. If the level is below the upper mark, check for fluid leaks at the transmission, hose and line joints, and cooler lines. If the level is an excess, drain the ATF to proper level.

7. If necessary fill the transmission through the dipstick hole bring the fluid level up to the upper mark. Always use ACURA ATF-Z1 Automatic Transmission Fluid (ATF). Using a non-Acura ATF can affect shift quality.

8. Insert the dipstick (A) back into the transmission in the direction (B) shown.

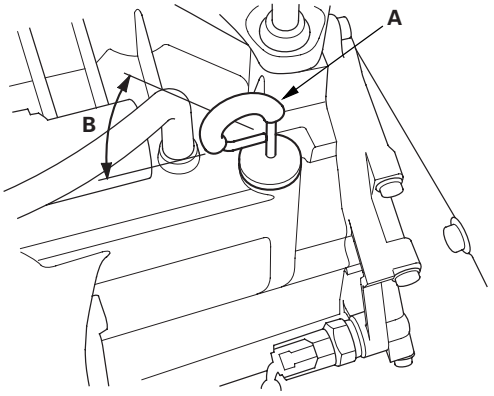

ATF Replacement

NOTE: Keep all foreign particles out of the transmission.

1. Bring the transmission up to normal operating temperature (the radiator fan comes on).

2. Park the vehicle on level ground, and turn the engine off.

3. Remove the drain plug (A), and drain the automatic transmission fluid (ATF).

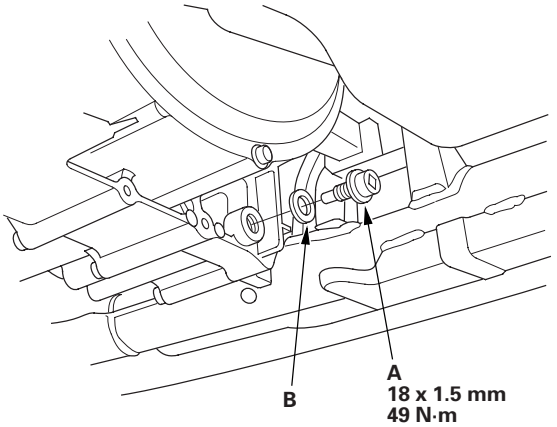

4. Reinstall the drain plug with a new sealing washer (B).

5. Remove the dipstick, and refill transmission with the recommended fluid amount through the dipstick hole until the level reaches the upper mark on the dipstick. Always use ACURA ATF-Z1 Automatic Transmission Fluid (ATF). Using a non-Acura ATF can affect shift quality.

   Automatic Transmission Fluid Capacity:
   2.9 L (3.1 US qt) at change
   6.5 L (6.9 US qt) at overhaul

6. Insert the dipstick (A) back into the transmission in the direction (B) shown.

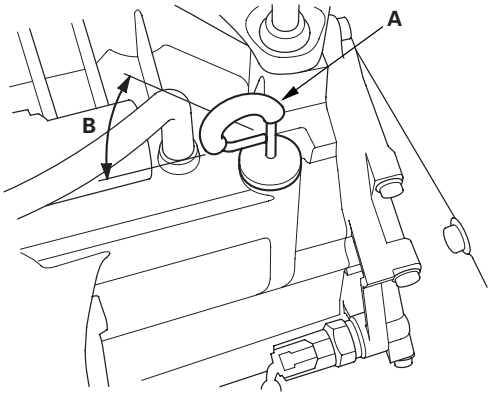

Transmission Removal

Special Tools Required
- Engine hanger adapter EQS00BRSX0
- Engine support hanger, A and Reds AAR-T-12566 (Available through the Acura Tool and Equipment Program 1-888-424-6857)
- Front subframe adapter EQS02C000011

NOTE: Use fender covers to avoid damaging painted surfaces.

1. Before disconnecting the battery, make sure you have the anti-theft code for the radio, then write down the customer's radio station presets.

2. Raise the vehicle, and make sure it is securely supported.

3. Remove the splash shield.

4. Remove the drain plug (A), and drain the automatic transmission fluid (ATF). Reinstall the drain plug with a new sealing washer (B).

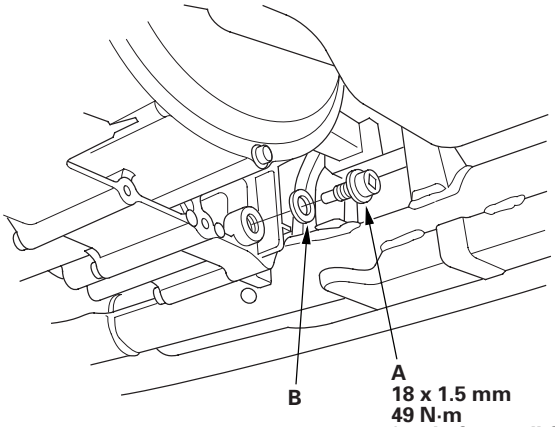

5. Disconnect the battery negative terminal, then disconnect the battery positive terminal.

6. Remove the air cleaner housing and the intake air duct.

7. Remove the battery hold-down bracket, then remove the battery and battery tray.

8. Remove the harness clamp from the battery base, then remove the battery base.

9. Remove the transmission ground terminal (A).

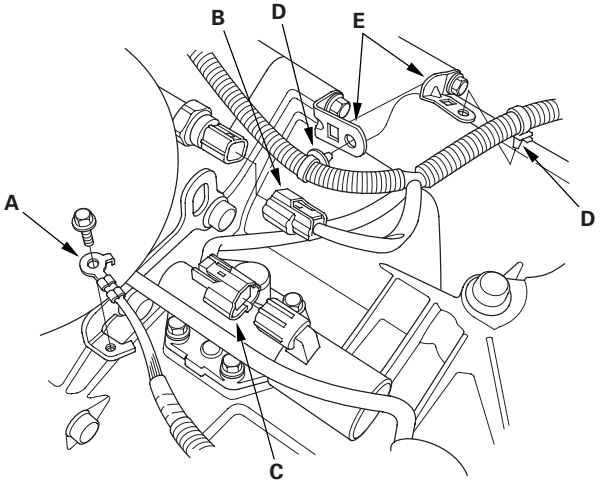

10. Disconnect the 2nd clutch transmission fluid pressure switch connector (B) and A/T clutch pressure control solenoid valve A connector (C), and remove the harness clamps (D) from the clamp brackets (E).

11. Disconnect the output shaft (countershaft) speed sensor connector (A) and input shaft (mainshaft) speed sensor (B).

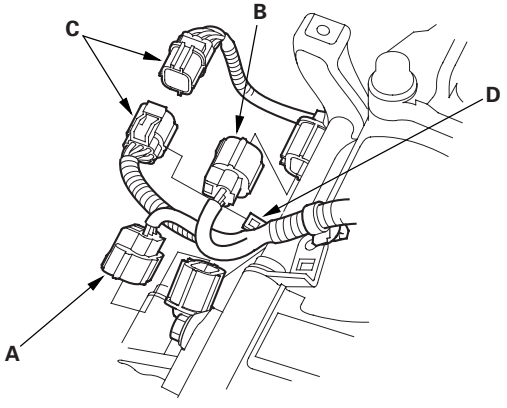

12. Remove the transmission range switch connector (C) from its bracket (D), then disconnect it.

(cont'd)

Transmission Removal (cont'd)

13. Disconnect the 3rd clutch transmission fluid pressure switch connector.

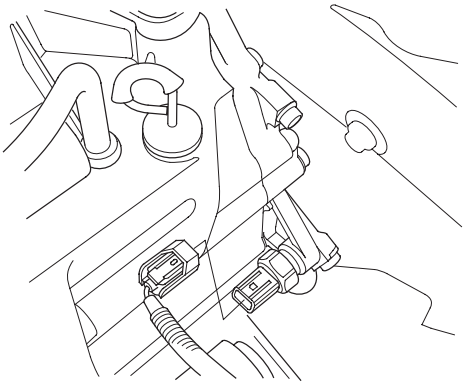

14. Disconnect the shift solenoid harness connector (A), A/T clutch pressure control solenoid valve B connector, and solenoid valve C connector, then remove the harness clamps (D) from the clamp brackets (E).

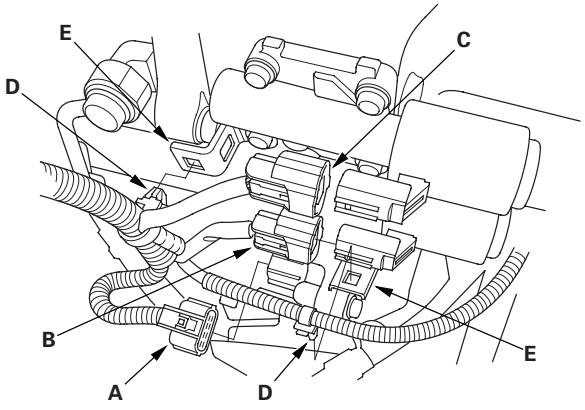

15. Remove the ATF cooler hoses (A) from the ATF cooler lines (B). Turn the ends of the ATF cooler hoses up to prevent ATF from flowing out, then plug the ATF cooler hoses and lines.

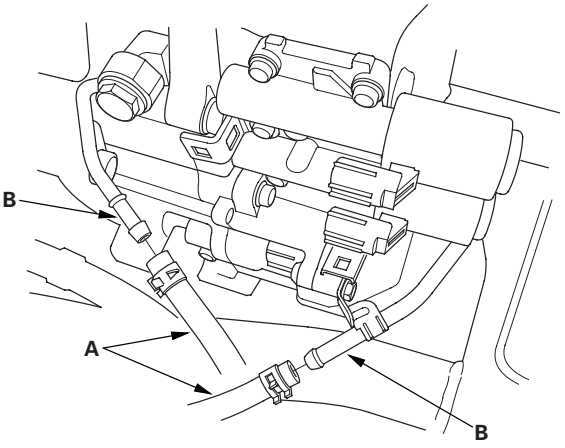

16. Check for any signs of leakage at the hose joints.

17. Remove the engine wire harness cover (A) by lifting up on the lock tab (B), then slide the harness forward off the air cleaner housing mounting bracket (C).

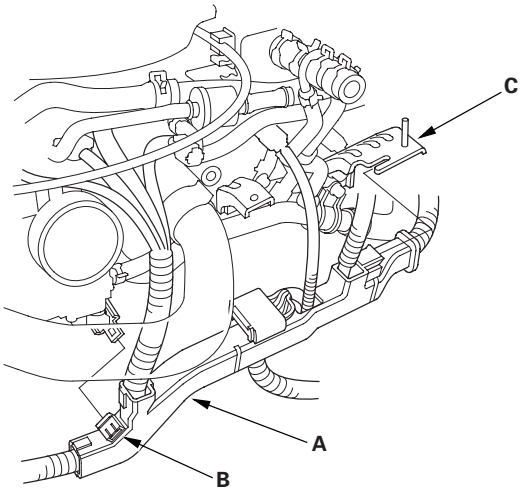

18. Remove the water pipe mounting bolt (A) and lower the water pipe slightly. Loosen air cleaner housing bracket mounting bolt (B), and remove mounting bolt (C).

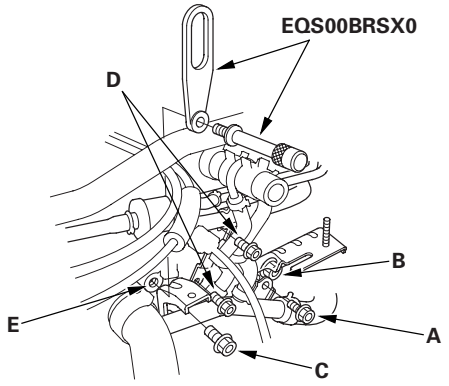

19. Remove the brake booster and evaporative emission (EVAP) line bracket mounting bolts (D), and attach the special tool to the threaded hole (E) in the cylinder head.

20. Install the engine support hanger (AAR-T-12566) to the vehicle and attach the hook to the special tool.

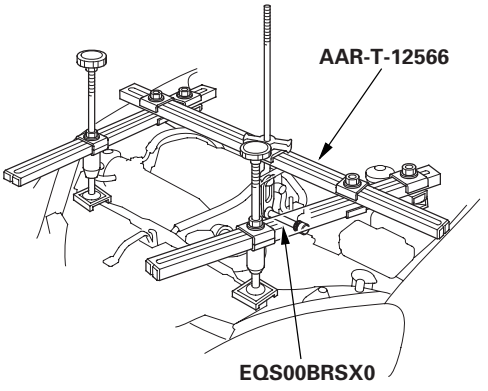

21. Insert a 5 mm Allen wrench (A) in the top of the ball joint pin (B), and remove the nut (C), then separate the stabilizer link (D) from the lower arm.

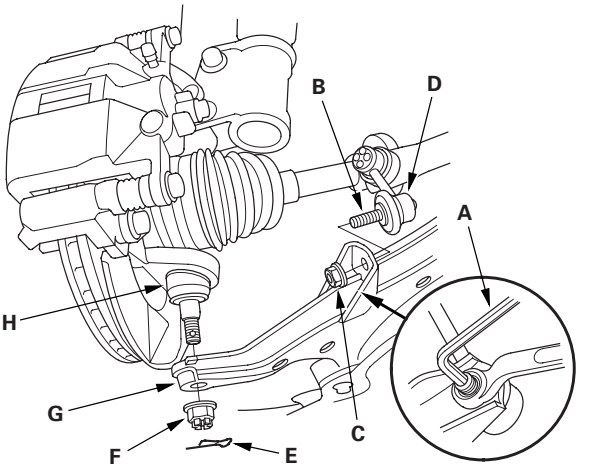

22. Remove the lock pin (E) and castle nuts (F), and separate the lower arms (G) from the knuckles (H) (see step 10 on page 18-13).

23. Disconnect the A/F sensor connector (A) and secondary HO2S connector (B), then remove the harness from the clamps (C).

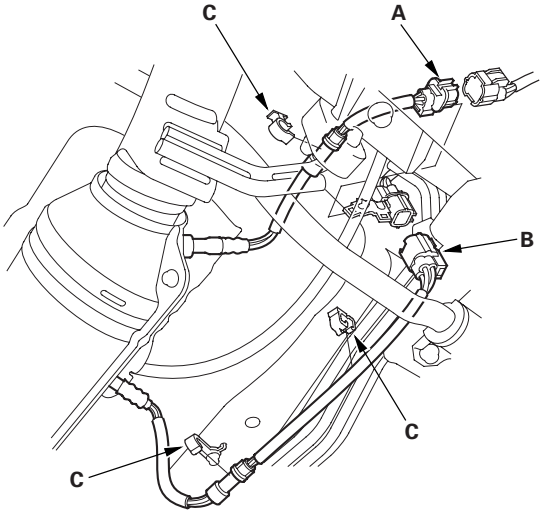

(cont'd)

Transmission Removal (cont'd)

24. Remove the three way catalytic converter (TWC) assembly.

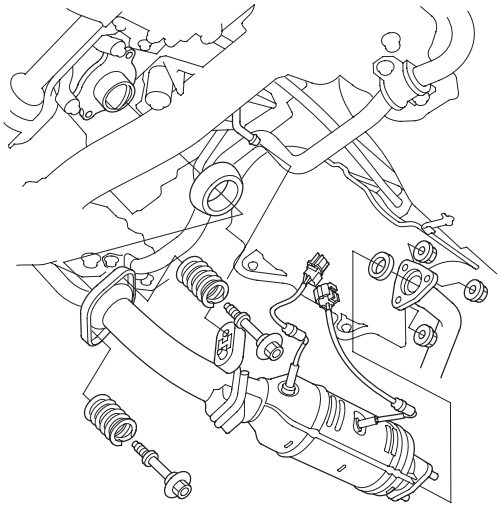

25. Remove the torque converter cover (A), and remove the eight drive plate bolts (B) while rotating the crankshaft pulley.

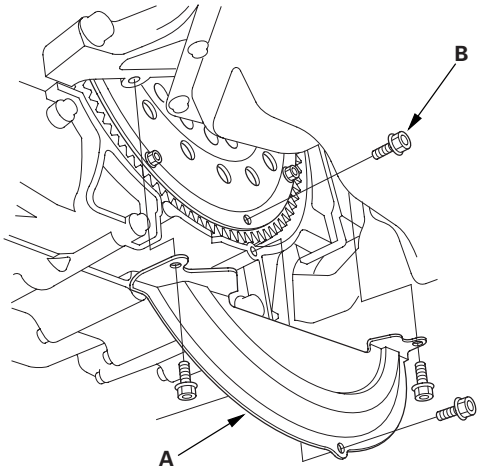

26. Remove the bolts securing the shift cable holder (A), then remove the shift cable cover (B).

    NOTE: To prevent damage to the control lever joint, remove the bolts securing the shift cable holder before removing the bolts securing the shift cable cover.

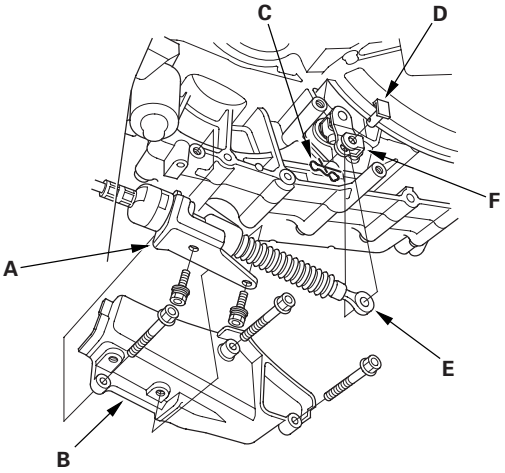

27. Remove the spring clip (C) and control pin (D), then separate the shift cable (E) from the control lever (F). Do not bend the shift cable excessively.

28. Disconnect the ATF cooler hose (A) from the ATF cooler line (B), then plug the end of the hose.

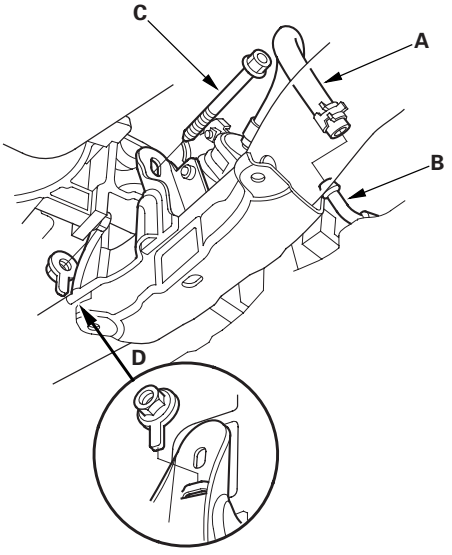

29. Remove the front mount bolt (C) and nut (D).

30. Remove the rear mount bracket bolts.

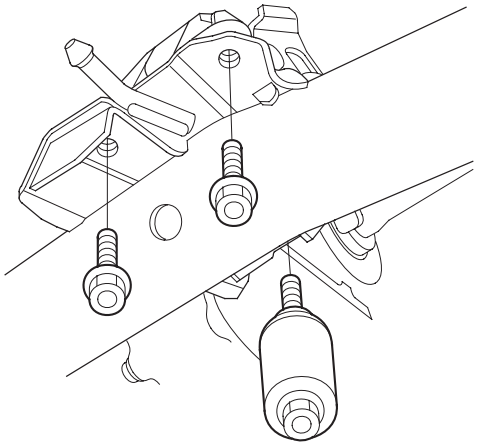

31. Make the appropriate reference lines at positions A and B that line up with the center of the front subframe mounting bolts (C).

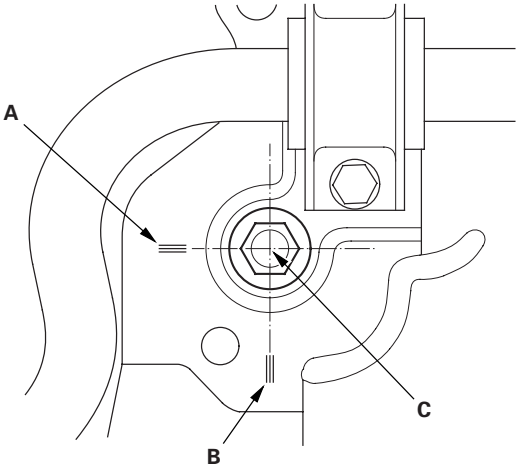

32. Attach the special tool to the front subframe with hanging the hook of the special tool over the front of the subframe, then tighten the special tool screw.

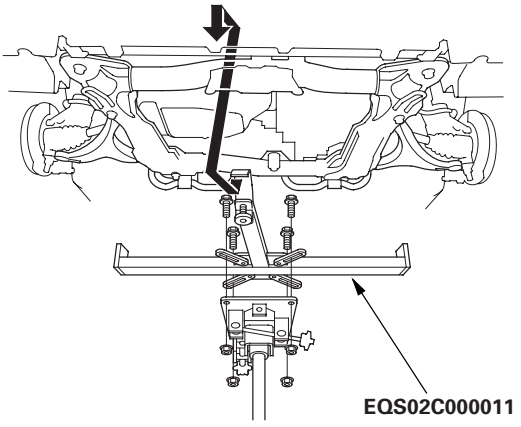

33. Raise the jack and line up the slots in the arms with the bolt holes on the corner of the jack base, then attach them with the bolts securely.

34. Remove the four front subframe mounting bolts, then lower the subframe.

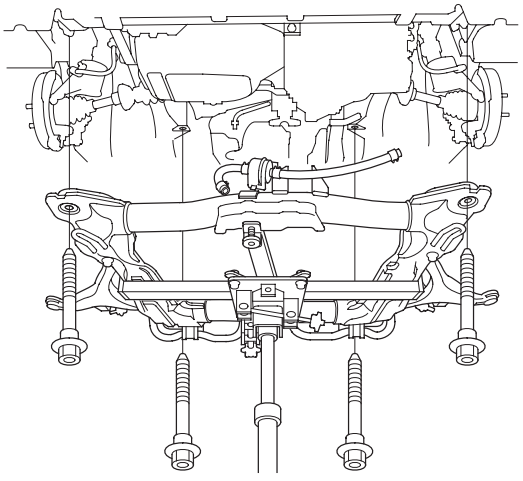

(cont'd)

Transmission Removal (cont'd)

35. Pry the driveshafts, and remove them from the differential and intermediate shaft.

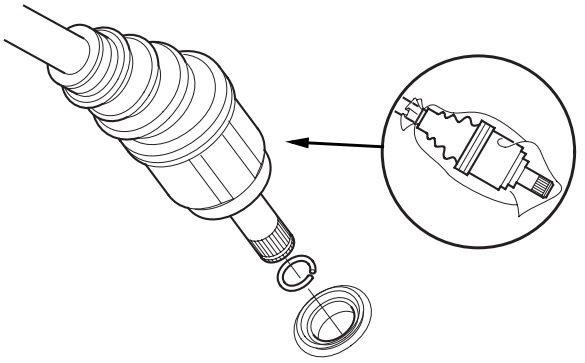

36. Remove the intermediate shaft cover (A).

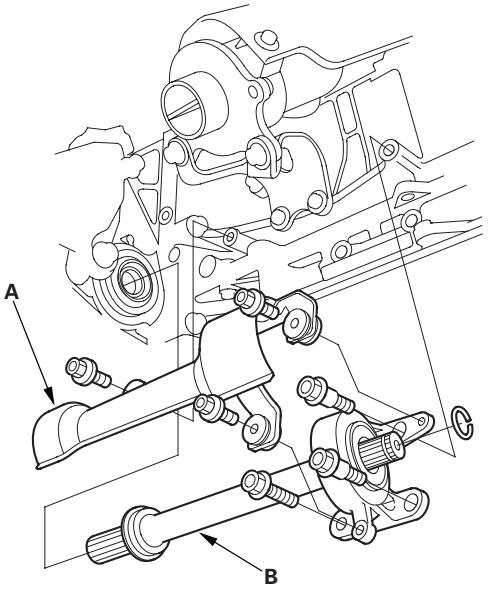

37. Remove the intermediate shaft (B). Coat all precision finished surfaces with clean engine oil, then tie plastic bags over the driveshaft and intermediate shaft ends.

38. Place a jack under the transmission.

39. Remove the upper transmission housing mounting bolts.

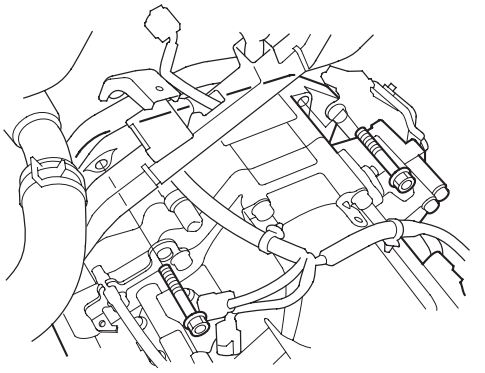

40. Remove the transmission mount bracket bolt (A) and nuts (B), then remove the transmission mount bolt (C).

2002-2003 models:

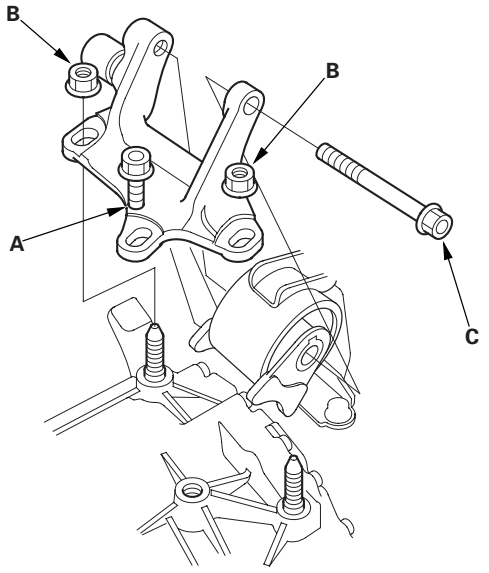

2004-2006 models:

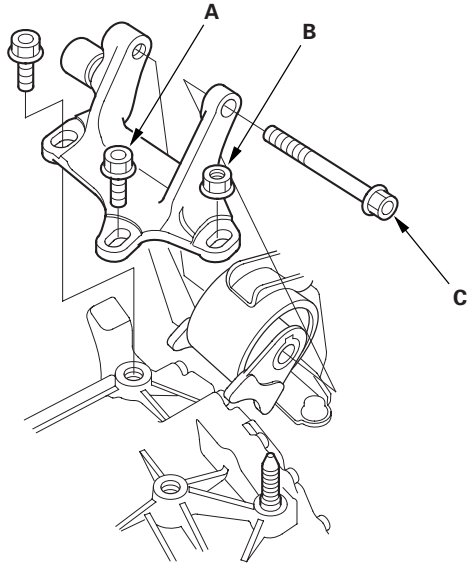

41. Remove the front transmission housing mounting bolts located on the front lower of the transmission.

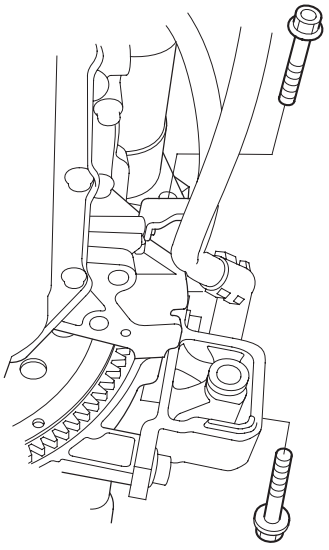

42. Remove the rear transmission housing mounting bolts located on the rear lower of the transmission.

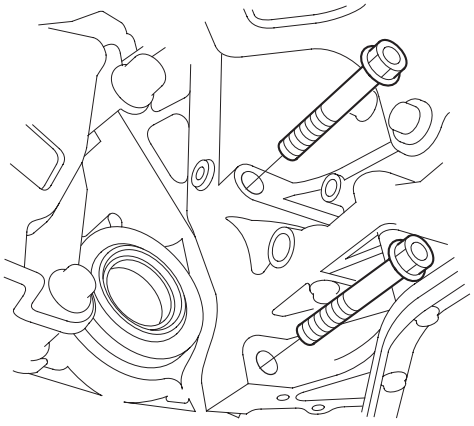

43. Slide the transmission away from the engine to remove it from the vehicle.

(cont'd)

Transmission Removal (cont'd)

44. Remove the torque converter assembly.

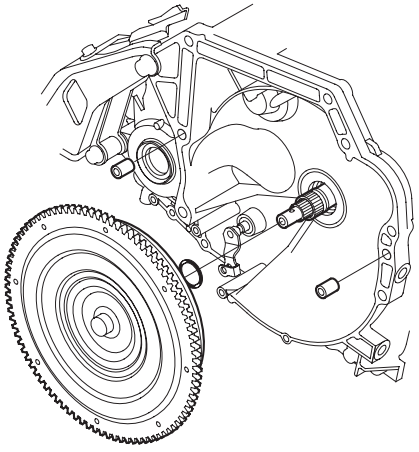

45. Remove the front mount.

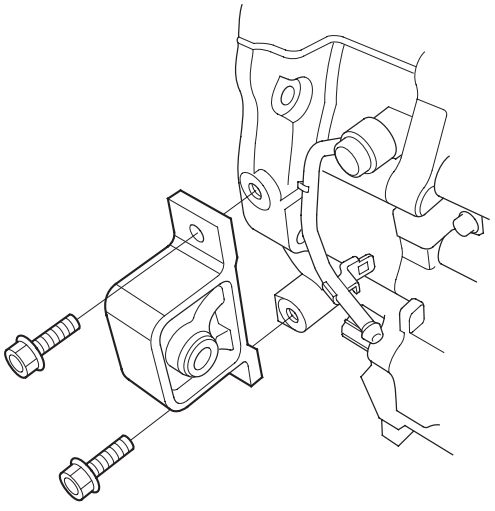

46. Remove the rear mount/bracket.

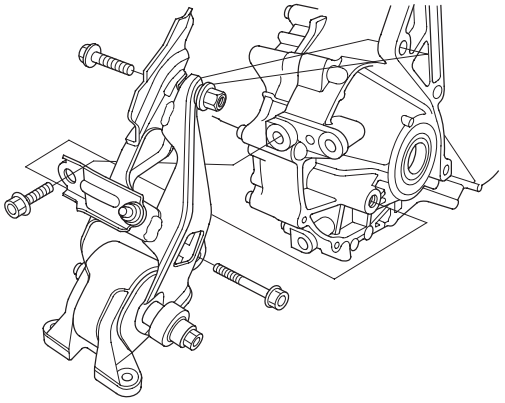

47. Remove the air cleaner housing mounting bracket.

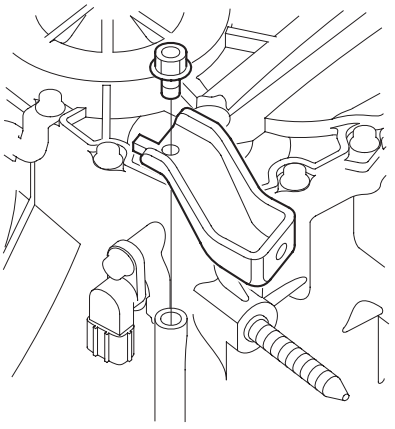

48. Inspect the drive plate, and replace it if it's damaged.

Drive Plate Removal and Installation

1. Remove the transmission assembly (see page 14-273).

2. Remove the drive plate (A) and washer (B) from the crankshaft.

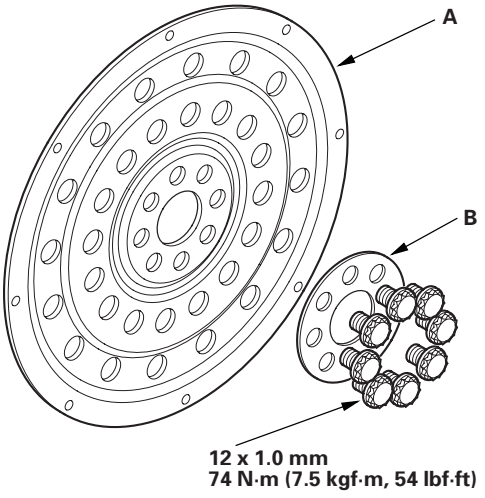

3. Install the drive plate and washer on the engine crankshaft, and tighten the eight bolts in a crisscross pattern in two or more steps.

4. Install the transmission (see page 14-282).

Transmission Installation

Special Tools Required
- Engine hanger adapter EQS00BRSX0
- Engine support hanger, A and Reds AAR-T-12566 (Available through the Acura Tool and Equipment Program 1-888-424-6857)
- Front subframe adapter EQS02C000011

NOTE: Use fender covers to avoid damaging painted surfaces.

1. Clean the ATF cooler (see page 14-291).

2. Install the air cleaner housing mounting bracket.

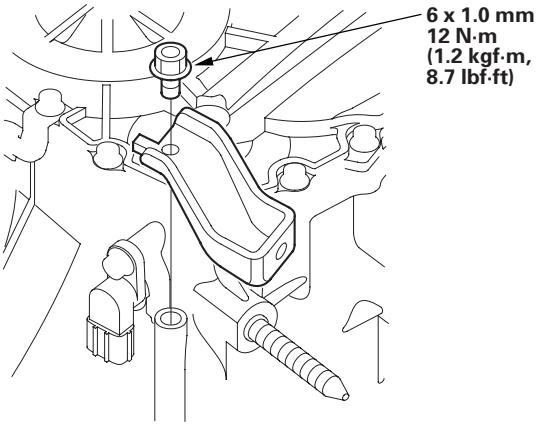

3. Install the front mount.

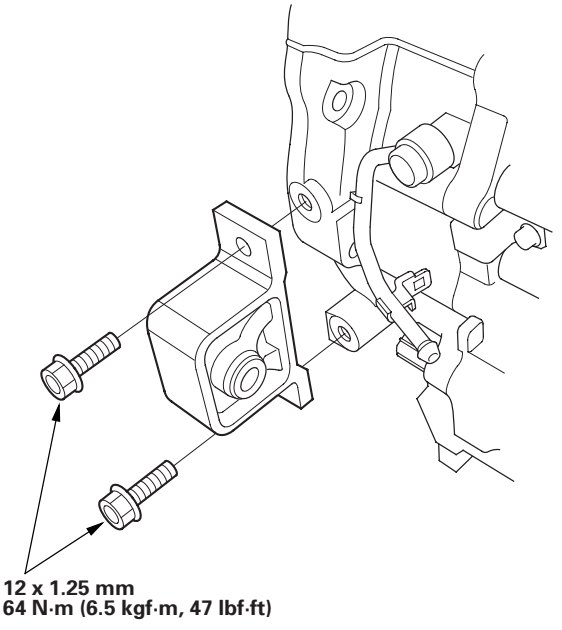

4. Install the rear mount/bracket.

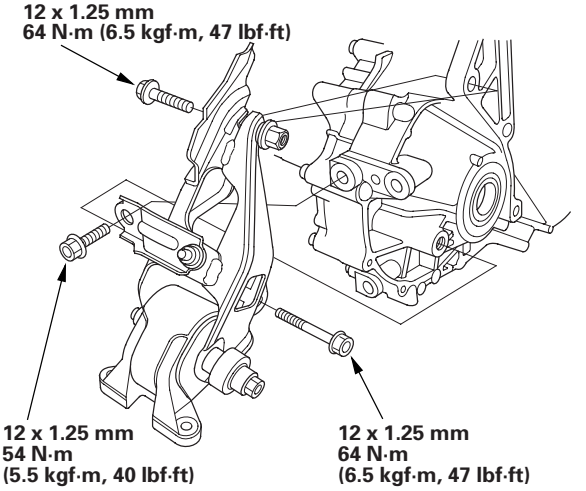

5. Install the torque converter assembly (A) on the mainshaft (B) with the new O-ring (C).

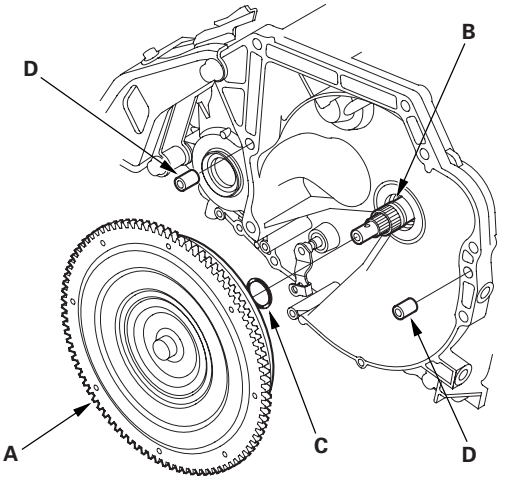

6. Install the 14 x 20 mm dowel pins (D) in the torque converter housing.

7. Place the transmission on a jack, and raise the transmission to engine level.

8. Attach the rear transmission to the engine, then install the transmission housing mounting bolts.

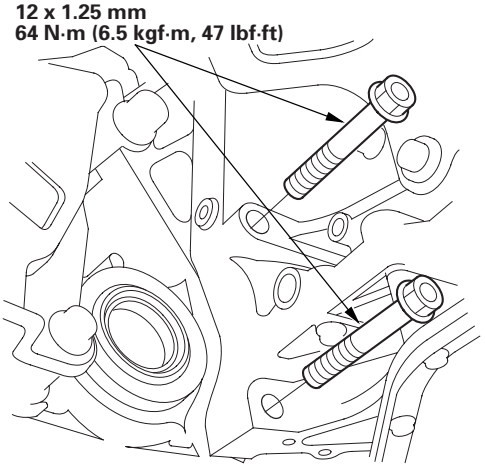

9. Install the front transmission housing mounting bolts.

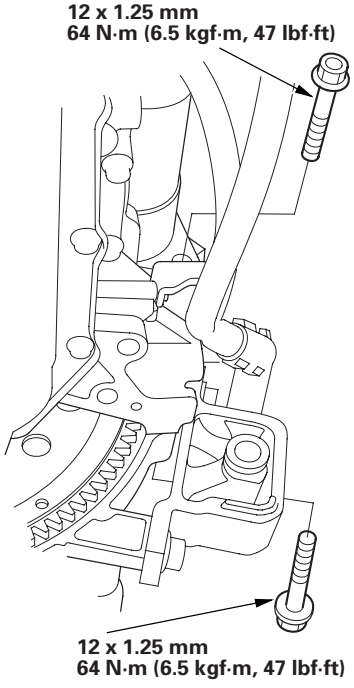

10. Install the upper transmission housing mounting bolts.

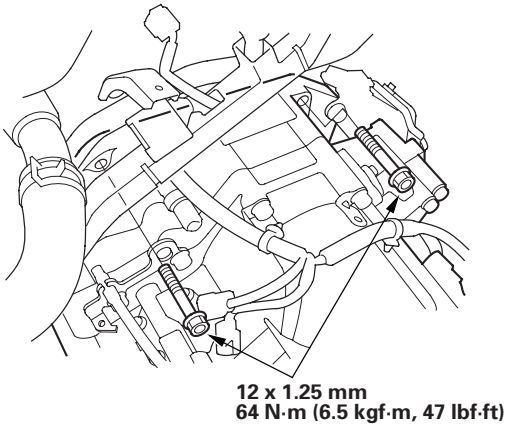

(cont'd)

Transmission Installation (cont'd)

11. Install the transmission mount bracket (A). Tighten the mount bolt (B) loosely, and tighten the transmission mount bracket bolt and nuts to the specified torque, then tighten the mount bolt to the specified torque.

2002-2003 models:

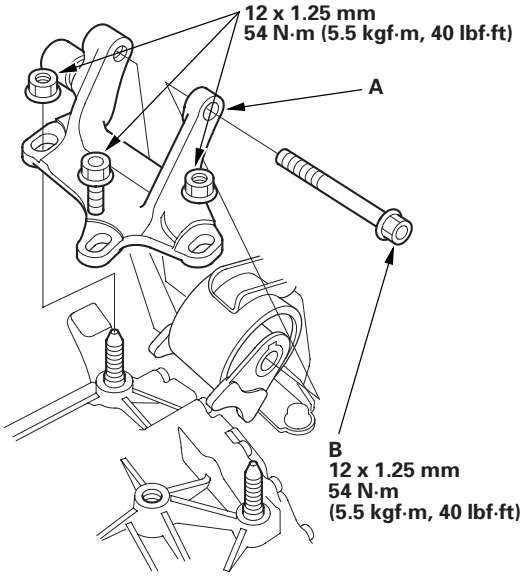

2004-2006 models:

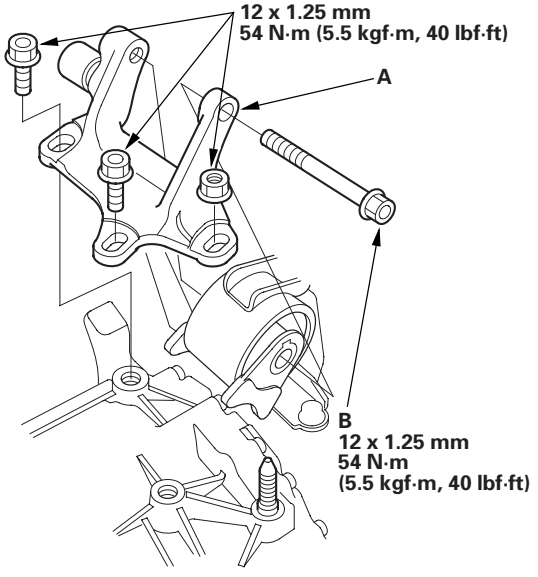

12. Install the new set ring (A) on the intermediate shaft (B).

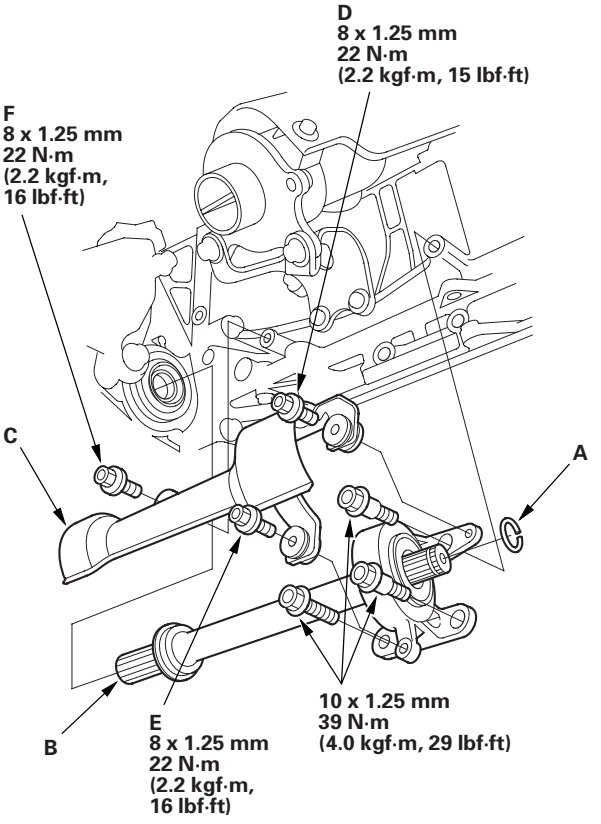

13. Clean the areas where the intermediate shaft contacts the transmission (differential) with solvent or carburetor cleaner, and dry with compressed air. Then install the intermediate shaft in the differential. While installing the intermediate shaft, be sure not to allow dust or other foreign particles to enter the transmission.

14. Install the intermediate shaft cover (C) with installing the mounting bolts loosely.

15. First tighten the right upper bolt (D) on the cover, then right lower bolt (E), and lastly the left bolt (F).

16. Install the new set ring (A) on the left driveshaft (B).

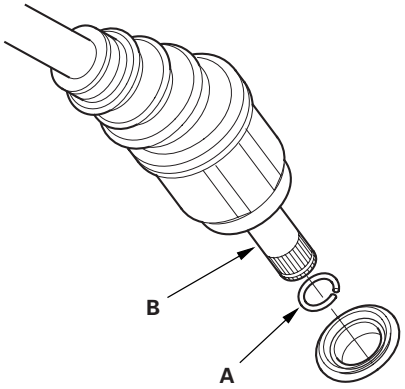

17. Install the right and left driveshaft (see page 16-17). While installing the left driveshaft in the differential, be sure not to allow dust or other foreign particles to enter the transmission.

    NOTE:
    - Clean the areas where the left driveshaft contacts the transmission (differential) with solvent or carburetor cleaner, and dry with compressed air.
    - Turn the right and left steering knuckle fully outward, and slide the left driveshaft into the differential until you feel its set ring engages the side gear. Slide the right driveshaft over the intermediate shaft splines until you feel the driveshaft engages the intermediate shaft set ring.

18. Support the front subframe with the special tool and a jack, and lift it up to body.

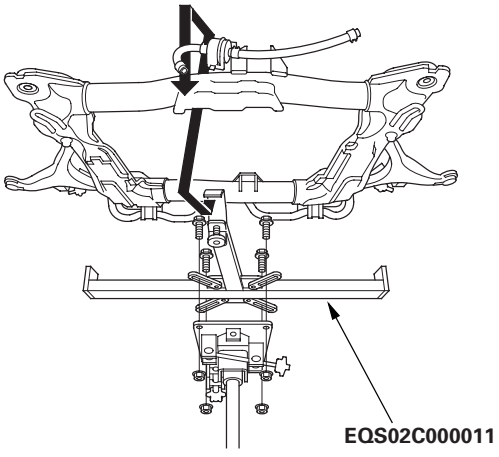

19. Loosely install four new front subframe mounting bolts.

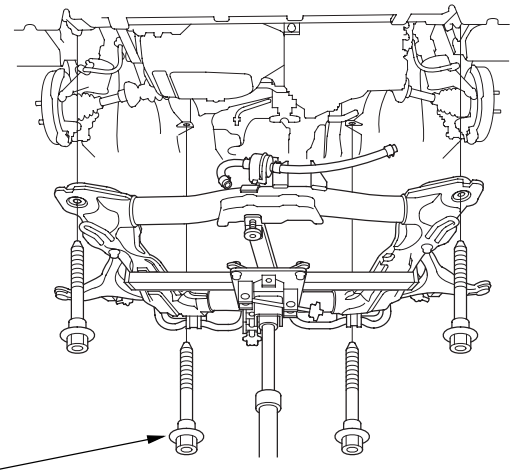

14 x 1.5 mm
103 N·m (10.5 kgf·m, 75.9 lbf·ft)
Replace.

20. Align the reference marks (A) with the center of the front subframe mounting bolt heads (B), then tighten the bolts to the specified torque.

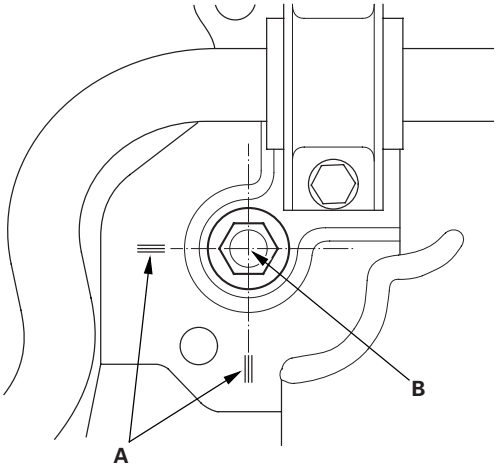

(cont'd)

Transmission Installation (cont'd)

21. Install the rear mount bracket bolts.

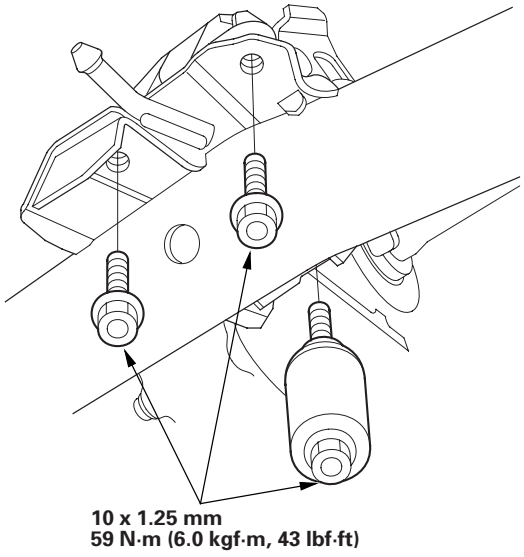

22. Install a new front mount bolt (A) and nut (B), connect the ATF cooler hose (C) to the ATF cooler pipe.

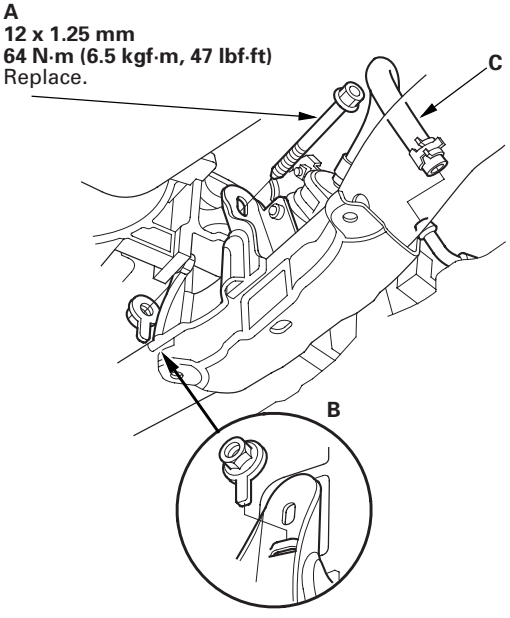

23. Remove the jack from the transmission.

24. Attach the shift cable end (A) to the control lever (B), then insert the control pin (C) into the control lever hole through the shift cable end, and secure the control pin with the spring clip (D). Do not bend the shift cable excessively.

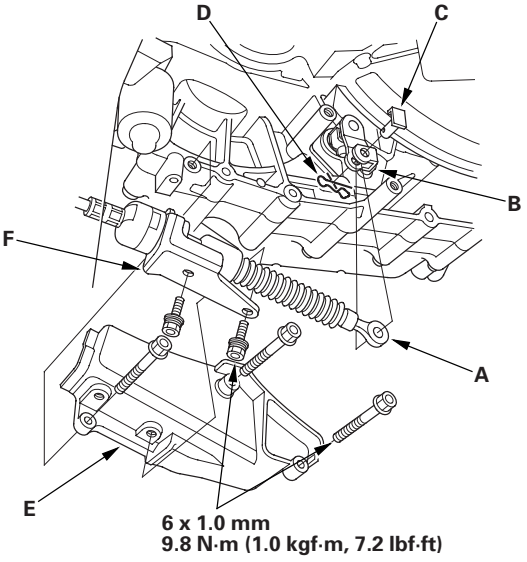

25. Install the shift cable cover (E), then secure the shift cable holder (F) to the shift cable cover with the bolts.

NOTE: To prevent damage to the shift cable end at the control lever joint, be sure to secure the shift cable holder to the shift cable cover after installing the shift cable cover to the torque converter housing.

26. Attach the torque converter to the drive plate with eight bolts (A). Rotate the crankshaft pulley as necessary to tighten the bolts to 1/2 of the specified torque, then to the final torque, in a crisscross pattern. After tightening the last bolt, check that the crankshaft rotates without stuck.

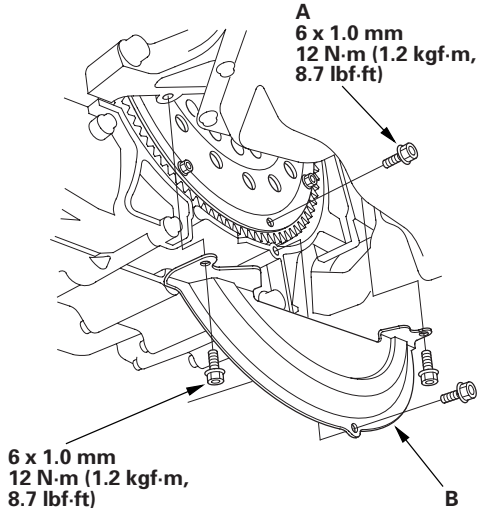

27. Install the torque converter cover (B).

28. Install the three way catalytic converter (TWC) assembly with the new gaskets.

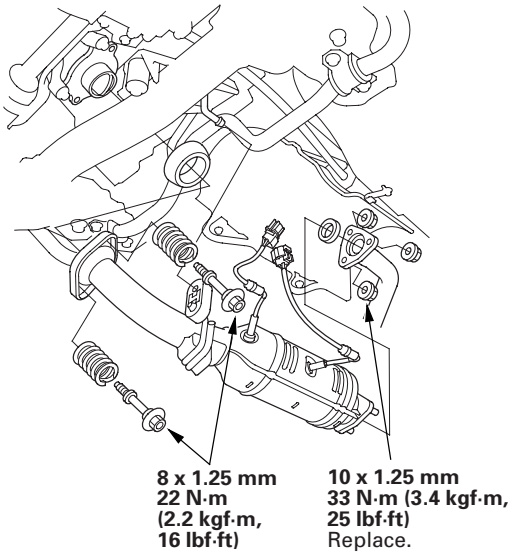

29. Connect the A/F sensor connector (A) and secondary HO2S connector (B), and clamp the harnesses.

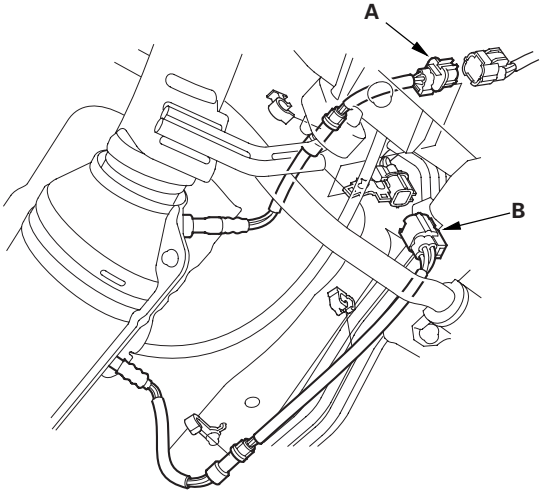

30. Connect the ball joints to the lower arms, and install the castle nuts and spring clips (see page 18-19).

31. Connect the ball joints to the lower arms, and install the nuts. Insert a 5 mm Allen wrench (H) in the top of the ball joint pins, and tighten the nuts (see page 18-18).

(cont'd)

Transmission Installation (cont'd)

32. Remove the engine support hanger.

33. Remove the special tool from the engine cylinder head.

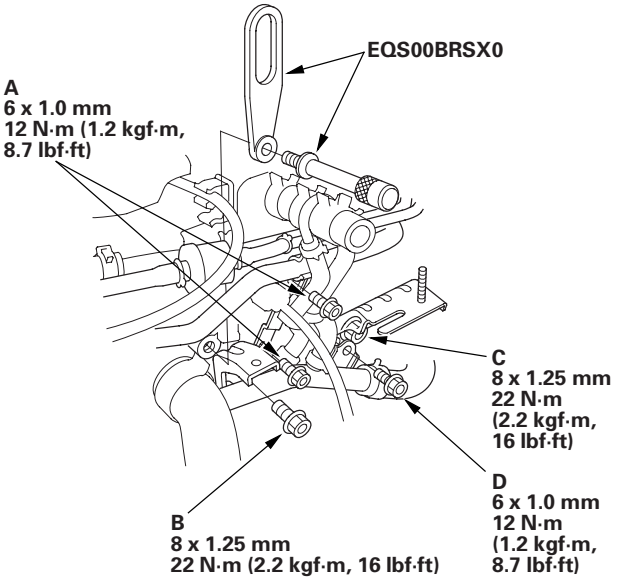

34. Install the brake booster and evaporative emission (EVAP) line bracket mounting bolts (A) and air cleaner housing bracket mounting bolt (B).

35. Tighten air cleaner housing bracket mounting bolt (C), and install the water pipe mounting bolt (D).

36. Install the engine harness cover.

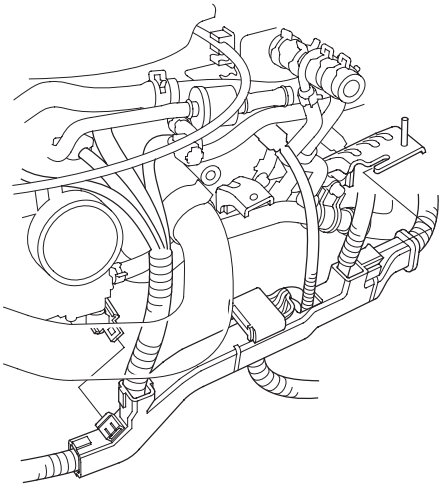

37. Connect the ATF cooler hoses (A) to the ATF cooler lines (B) (see page 14-293).

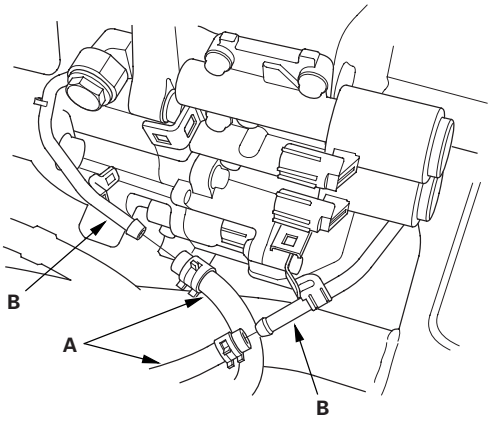

38. Connect the shift solenoid harness connector (A), A/T clutch pressure control solenoid valve B connector, and solenoid valve C connector. Install the harness clamps (D) on the clamp brackets. (E).

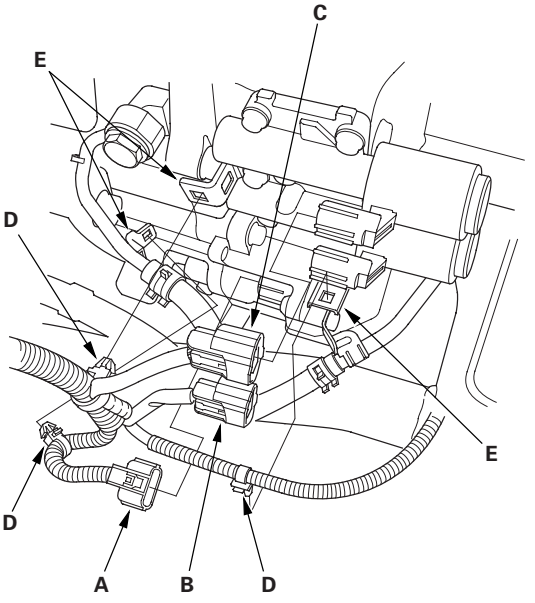

39. Connect the 3rd clutch transmission fluid pressure switch connector.

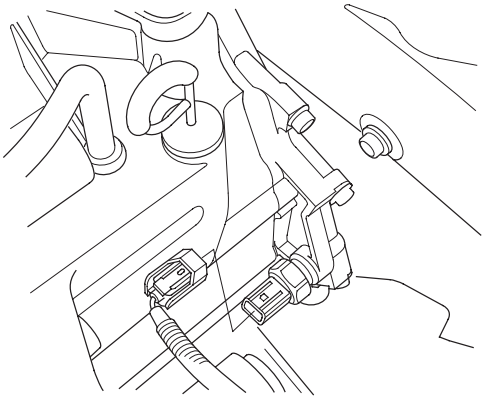

40. Connect the transmission range switch connector (A), and install it on its bracket (B).

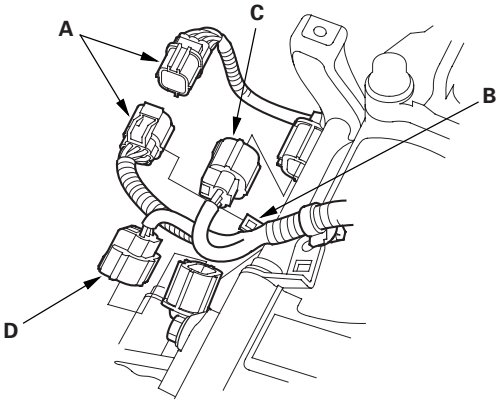

41. Connect the connectors to the input shaft (mainshaft) speed sensor (C) and output shaft (countershaft) speed sensor (D).

42. Connect the A/T clutch pressure control solenoid valve A connector and 2nd clutch transmission fluid pressure switch connector (B), and install the harness clamps (C) on the clamp brackets (D).

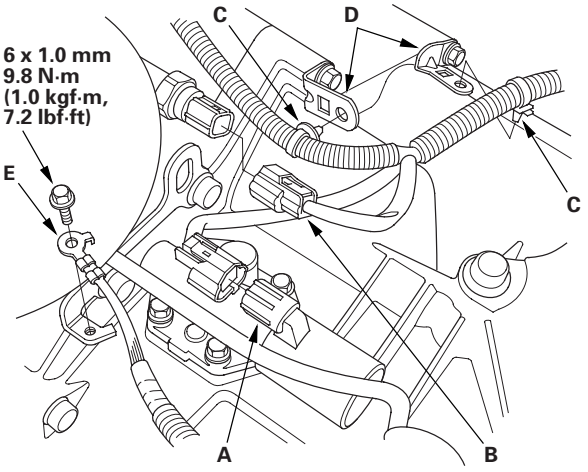

43. Install the transmission ground terminal (E).

44. Install the splash shield.

45. Install the battery base, then install the harness clamp on the clamp bracket on the base.

46. Refill the transmission with ATF (see step 5 on page 14-272).

47. Install the intake air duct and air cleaner housing.

48. Install the battery tray and battery, then secure the battery with its hold-down bracket.

49. Connect the battery positive terminal, then connect the negative terminal.

50. Set the parking brake. Start the engine, and shift the transmission through all gears three times.

51. Check the shift lever operation, A/T gear position indicator operation, and shift cable adjustment.

52. Check and adjust the front wheel alignment (see page 18-4).

(cont'd)

Transmission Installation (cont'd)

53. Start the engine and let it idle until it reaches normal operating temperature (the radiator fan comes on) with the transmission in the P or N position, then turn it off and check the ATF level (see page 14-271).

54. Do the PCM idle learn procedure.

    - 2002-2004 models (see page 11-349)
    - 2005-2006 models (see page 11-349)

55. Do the power window control unit reset procedure (see page 22-148).

56. Do the road test (see page 14-251).

57. Enter the radio anti-theft code, then enter the costomer's radio station presets, and set the clock.

ATF Cooler Cleaning

Special Tools Required
- ATF Cooler Cleaner GHTTTCF6H
- Magnetic Nonbypass Spin-on Filter GTHGNBP2 (Available through the Acura Tool and Equipment Program 1-888-424-6857)

Before installing an overhauled or remanufactured automatic transmission, you must thoroughly clean the ATF cooler to prevent system contamination. Failure to do so could cause a repeat automatic transmission failure.

The cleaning procedure involves heated ATF-Z1 delivered under high pressure (100 psi). Check the security of all hoses and connections. Always wear safety glasses or a face shield, along with gloves and protective clothing. If you get ATF in your eyes or on your skin, rinse with water immediately.

⚠ WARNING

- Improper use of the ATF cooler cleaner can result in burns and other serious injuries.
- Always wear eye protection and protective clothing, and follow this procedure.

1. Check the fluid in the cooler cleaner tank. (The fluid level should be 4.5 inches from the top of the filler neck.) Adjust the level if needed; do not overfill. Use only ACURA ATF-Z1; do not use any additives.

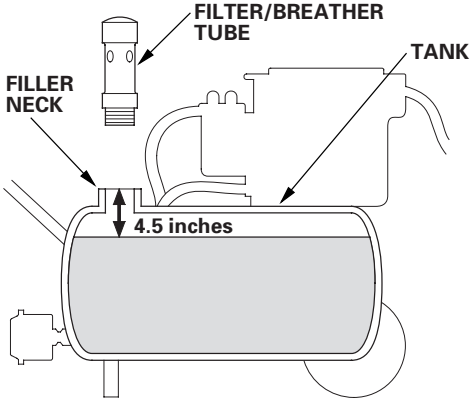

2. Plug the cooler cleaner into a 110 V grounded electrical outlet.

NOTICE
Make sure the outlet has no other appliances (light fixtures, drop lights, extension cords) plugged into it. Also, never plug the cooler cleaner into an extension cord or drop light; you could damage the unit.

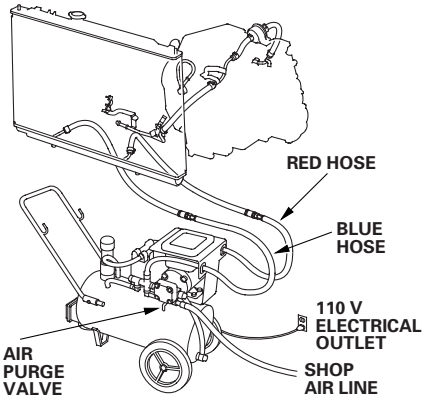

3. Flip the HEAT toggle switch to ON; the green indicator above the toggle switch comes on. Wait 1 hour for the cooler cleaner to reach its operating temperature. (The cooler cleaner is ready to use when the temperature gauge reads 140 to 150 °F.)

   NOTE: If the red indicator above the HEAT toggle switch comes on, the fluid level in the tank is too low for the tank heater to work (see step 1 of this procedure).

4. Select the appropriate pair of fittings, and attach them to the radiator, to the hoses, or to the banjo bolts for flow through the ATF cooler cleaner.

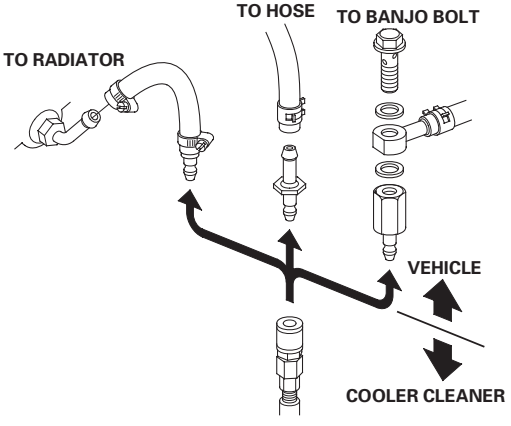

(cont'd)

ATF Cooler Cleaning (cont'd)

5. Connect the red hose to the cooler outlet line (the line that normally goes to the external filter on the transmission).

6. Connect the blue hose to the cooler inlet line.

7. Connect a shop air hose (regulated to 100 to 125 psi) to the air purge valve.

   NOTICE
   The quick-connect fitting has a one-way check valve to keep ATF from entering your shop's air system. Do not remove or replace the fitting. Attach the coupler provided with the cooler cleaner to your shop air line if your coupler is not compatible.

8. Flip the MOTOR toggle switch to ON; the green indicator above the toggle switch comes on. Let the pump run for 5 minutes. While the pump is running, open and close the air purge valve periodically to cause agitation and improve the cleaning process. Always open the valve slowly. At the end of the 5-minutes cleaning period, leave the air purge valve open.

   NOTE: While the pump is running with the air purge valve open, it is normal to see vapor coming from the filler/breather tube vents.

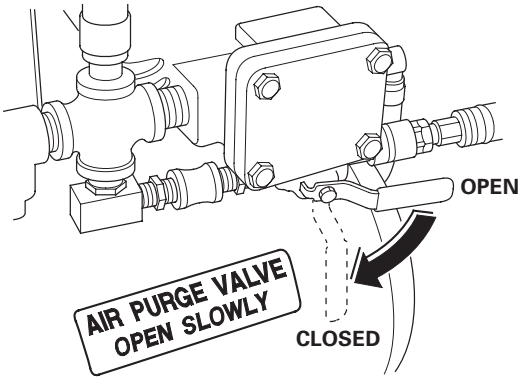

9. With the air purge valve open, flip the MOTOR toggle switch to OFF; the green indicator goes off. Leave the air purge valve open for at least 15 seconds to purge the lines and hoses of residual ATF, then close the valve.

10. Disconnect the red and blue hoses from the ATF cooler. Now connect the red hose to the cooler inlet line.

11. Now connect the blue hose to the cooler outlet line.

12. Flip the MOTOR toggle switch to ON, and let the pump run for 5 minutes. While the pump is running, open and close the air purge valve periodically. Always open the valve slowly. At the end of the 5-minutes cleaning period, leave the air purge valve open.

    NOTE: While the pump is running with the air purge valve open, it is normal to see vapor coming from the filler/breather tube vents.

13. With the air purge valve open, flip the MOTOR toggle switch to OFF. Leave the air purge valve open for at least 15 seconds to purge the lines and hoses of residual ATF, then close the valve.

14. Disconnect the red and blue hoses from the ATF cooler lines.

15. Connect the red and blue hoses to each other.

16. Disconnect the shop air from the air purge valve. Disconnect and stow the coupler if used.

17. Disconnect and stow the fittings from the ATF cooler inlet and outlet lines.

18. Unplug the cooler cleaner from the 110 V outlet.

Tool Maintenance

Follow these instructions to keep the ATF cooler cleaner working properly:
- Replace the two magnetic nonbypass spin-on filters once a year or when you notice a restriction in the ATF flow.
- Check the level and condition of the fluid in the tank before each use.
- Replace the ATF in the tank when it looks dark or dirty.

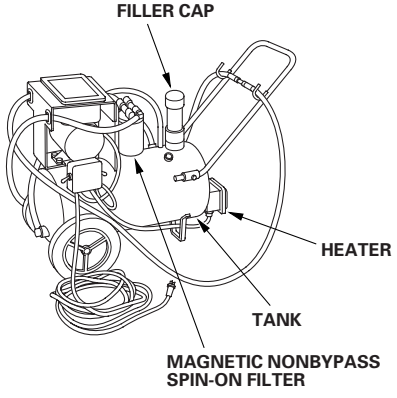

ATF Cooler Hose Replacement

1. Connect the ATF cooler hoses (A) to the ATF filter (B), with the dot (C) facing up, and secure the hose ends with the clips (D).

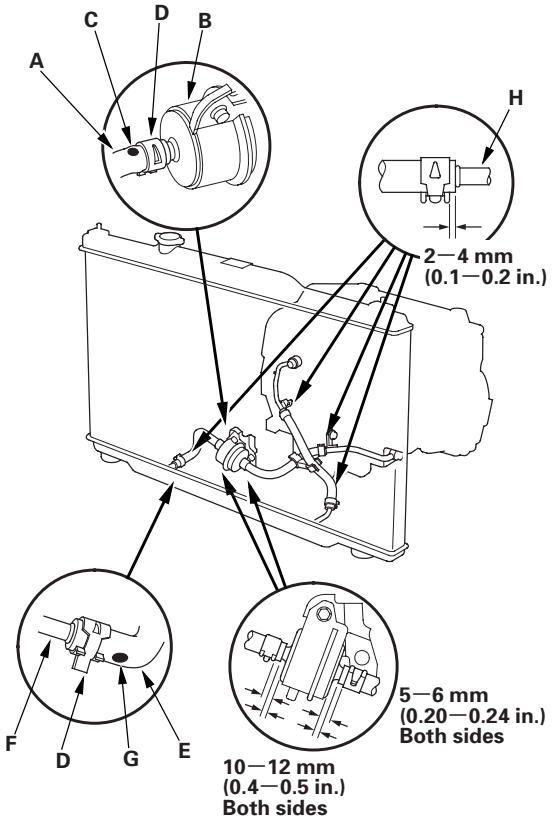

2. Connect the ATF cooler hose (E) to the ATF cooler (F) with the dot (G) facing down, and to the ATF cooler lines (H) on the transmission, and secure the hoses with the clips.

3. Install the clamp on the hoses.

Shift Lever Removal

1. Remove the center console (see page 20-59).
2. Shift the transmission into the N position.
3. Remove the nut securing the shift cable end, then separate the cable end from the shift lever.

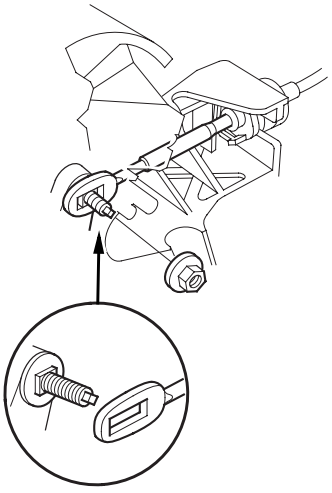

4. Rotate the socket holder (A) on the shift cable (B) a quarter turn; the tab (C) on the socket holder will be in the opening of the shift lever bracket base (D). Then slide the holder to remove the shift cable from the shift lever bracket base (D). Do not remove the shift cable by twisting the shift cable guide (E).

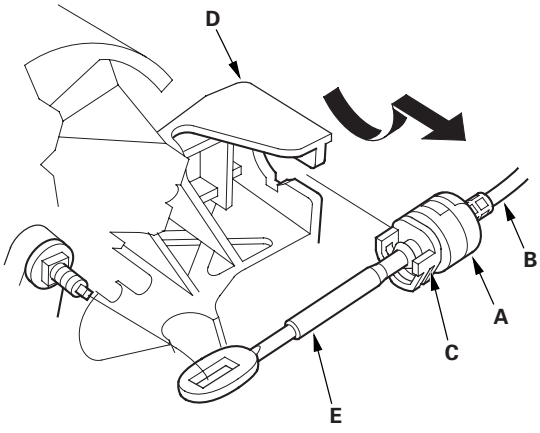

5. Disconnect transmission gear selection switch/park pin switch connector (A) and shift lock solenoid connector (B).

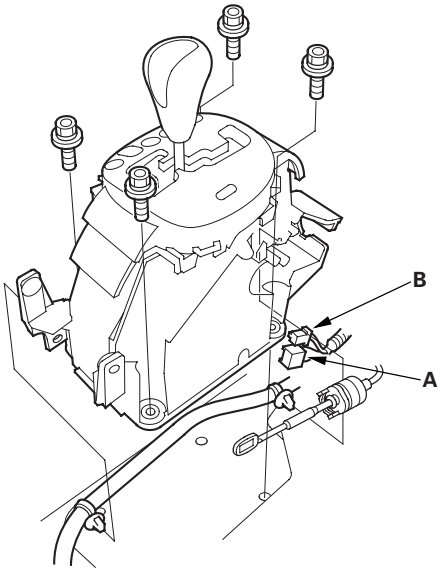

6. Remove the shift lever assembly.

Shift Lever Installation

1. Install the shift lever assembly.

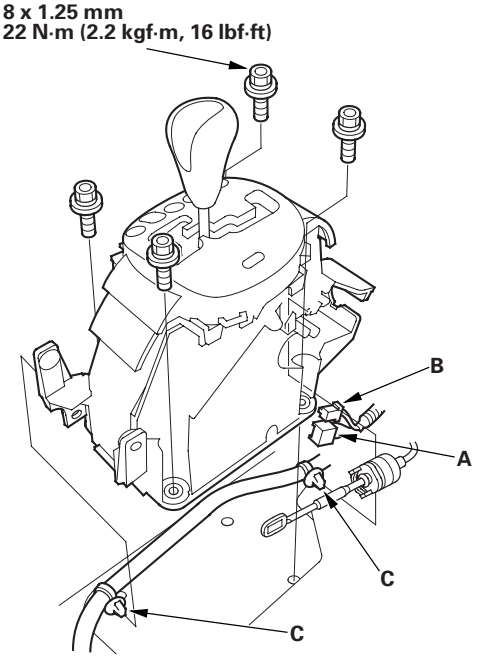

2. Connect transmission gear selection switch/park pin switch connector (A) and shift lock solenoid connector (B), and install the harness clamps (C) on the shift lever bracket base.

3. Turn the ignition switch ON (II), and verify that the N position indicator comes on.

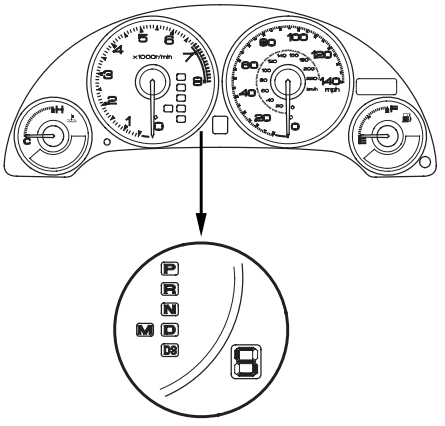

4. Install the shift cable to the shift lever (see step 5 on page 14-299). If necessary, adjust the shift cable.

Shift Lever Disassembly/Reassembly

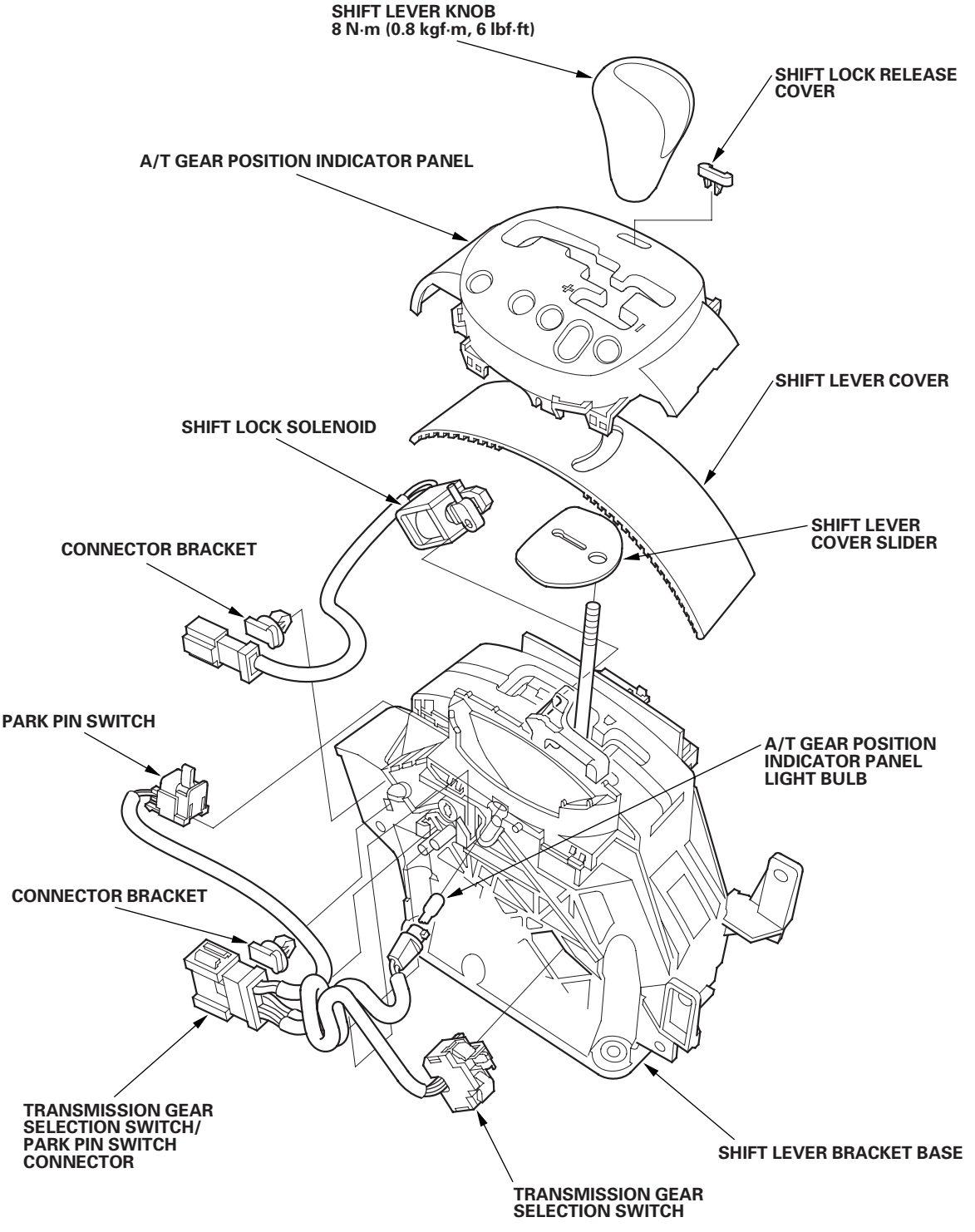

Shift Cable Replacement

1. Raise the vehicle, and make sure it is securely supported.
2. Remove the center console (see page 20-59).
3. Shift the transmission into the N position.
4. Remove the nut securing the shift cable end, then separate the cable end from the shift lever.

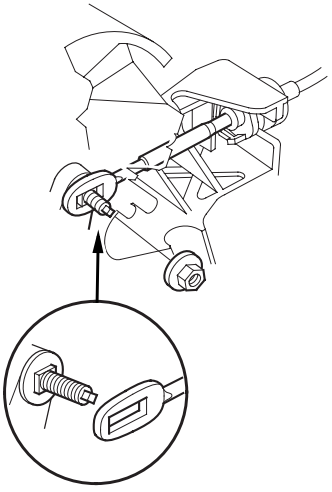

5. Rotate the socket holder (A) on the shift cable (B) a quarter turn; the tab (C) on the socket holder will be in the opening of the shift lever bracket base (D). Then slide the holder to remove the shift cable from the shift lever bracket base (D).

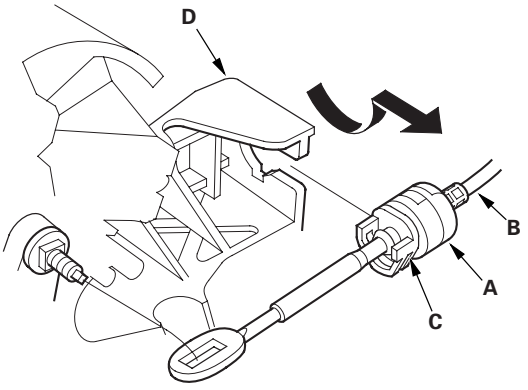

6. Remove the heat shield.
7. Remove the shift cable bracket (A) and grommet (B).

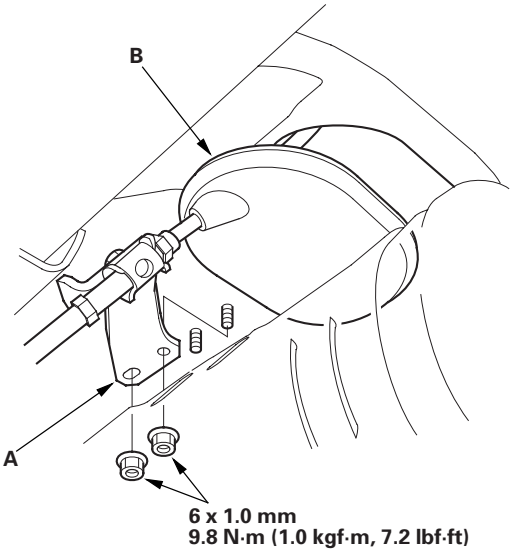

(cont'd)

Shift Cable Replacement (cont'd)

8. Remove the bolts securing the shift cable holder (A), then remove the shift cable cover (B).

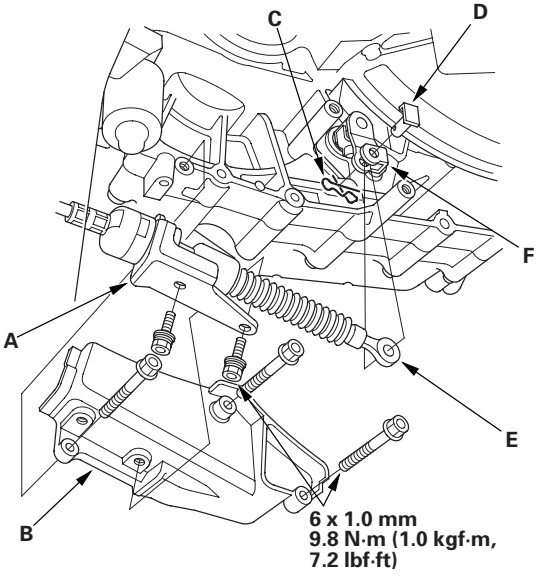

9. Remove the spring clip (C) and control pin (D), then separate the shift cable (E) from the control lever (F).

10. Insert the new shift cable through the grommet hole. Do not bend the shift cable excessively.

11. Install the shift cable bracket on the body, then install the grommet.

12. Verify that the transmission is in the N position on the control lever.

13. Attach the shift cable end to the control lever, then insert the control pin into the control lever through the shift cable end, and secure the control pin with the spring clip.

14. Install the shift cable cover, then secure the shift cable holder to the shift cable cover with the bolts.

    NOTE: To prevent damage to the control lever joint, remove the bolts securing the shift cable holder before removing the bolts securing the shift cable cover.

15. Install the heat shield.

16. Turn the ignition switch ON (II); and verify that the N position indicator comes on.

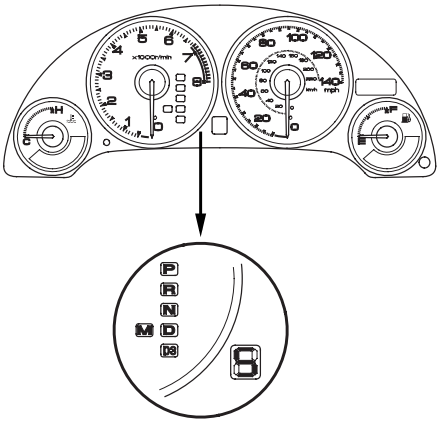

17. Install the shift cable to the shift lever (see step 5 on page 14-299). If necessary, adjust the shift cable.

Shift Cable Adjustment

1. Remove the center console (see page 20-59).

2. Shift the transmission into the N position.

3. Remove the nut securing the shift cable end, then separate the cable end from the shift lever.

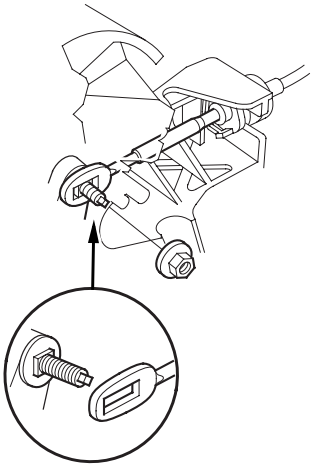

4. Rotate the socket holder (A) on the shift cable (B) a quarter turn; the tab (C) on the socket holder will be in the opening of the shift lever bracket base (D). Then slide the holder to remove the shift cable from the shift lever bracket base (D). Do not remove the shift cable by twisting the shift cable guide (E).

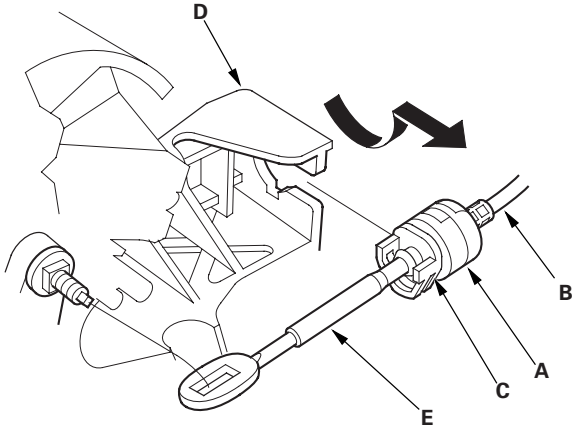

5. Push the shift cable (A) until it stops, then release it. Pull the shift cable back two steps so that the shift position is in N. Do not push and pull the shift cable by holding the shift cable guide (B).

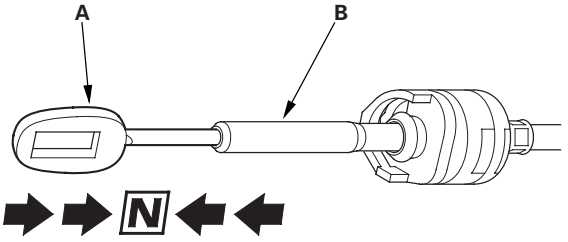

6. Turn the ignition switch ON (II), and verify that the N position indicator comes on.

7. Turn the ignition switch OFF.

8. Insert a 6.0 mm (0.24 in.) pin (A) through the positioning hole (B) on the shift lever bracket base and into the positioning hole (C) on the shift lever. The shift lever is secured in the N position.

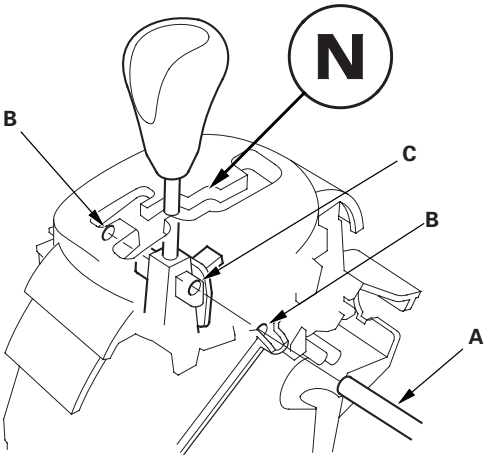

(cont'd)

Shift Cable Adjustment (cont'd)

9. Align the socket holder (A) on the shift cable (B) with the slot in the bracket base (C), then slide the holder into the base. Install the shift cable end (D) over the mounting stud (E) by aligning its square hole (F) with the square fitting (G) at the bottom of the stud. Rotate the holder a quarter turn to secure the shift cable. Do not install the shift cable by twisting the shift cable guide (H).

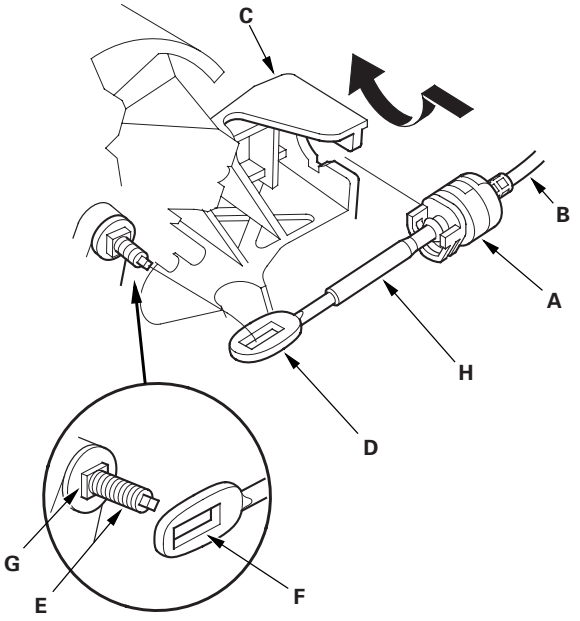

10. Verify that the shift cable end (A) is properly installed on the mounting stud (B).

Properly Installed:

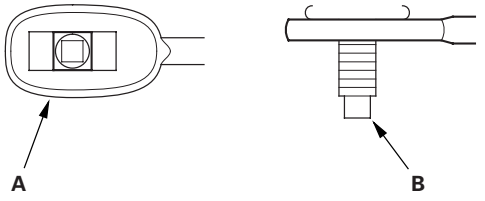

Improperly Installed:

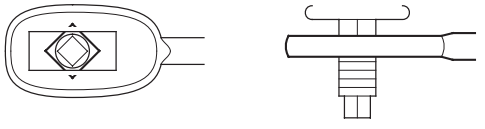

Cable end rides on the bottom of the mounting stud.

11. If improperly installed, remove the shift cable from the shift lever bracket base, and reinstall the shift cable. Do not install the shift cable end on the mounting stud while the shift cable is on the shift lever bracket base.

12. Install and tighten the nut.

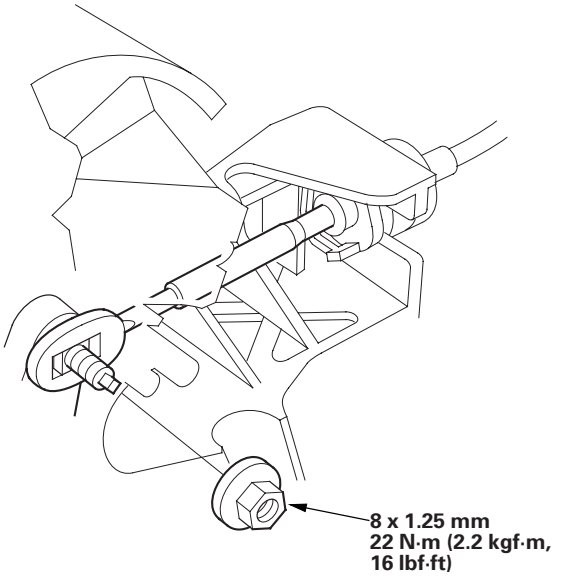

13. Remove the 6.0 mm (0.24 in.) pin that was installed to hold the shift lever.

14. Move the shift lever to each position, and verify that the A/T gear position indicator follows the transmission range switch.

15. Push the shift lock release, and verify that the shift lever releases.

16. Reinstall the center console (see page 20-59).

Component Location Index

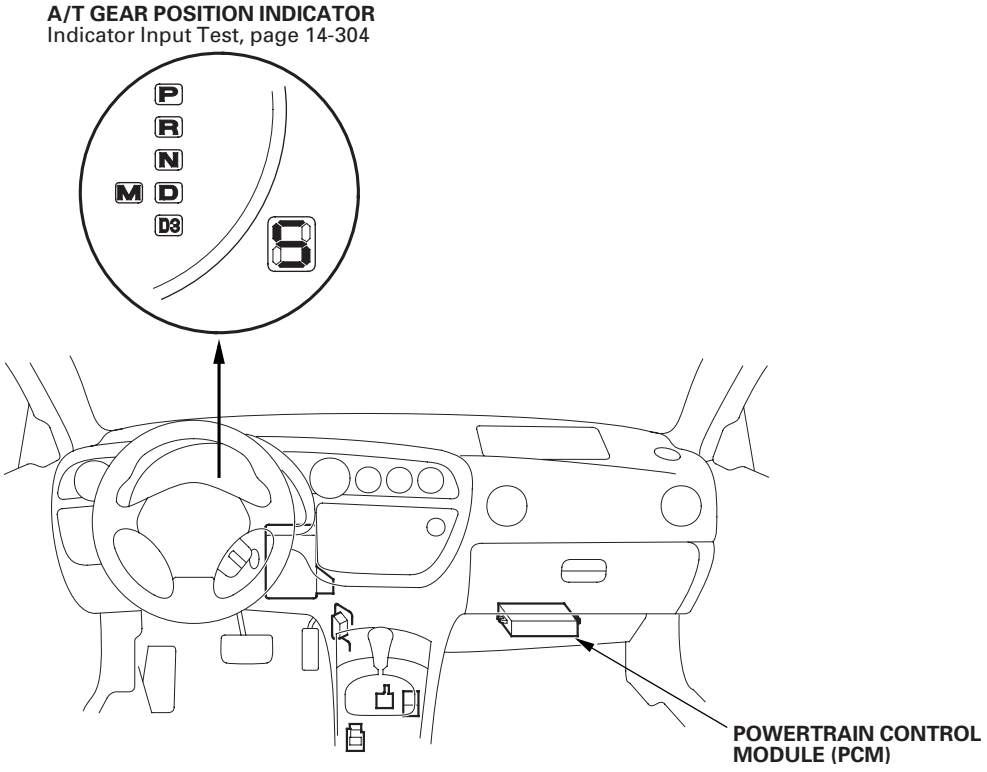

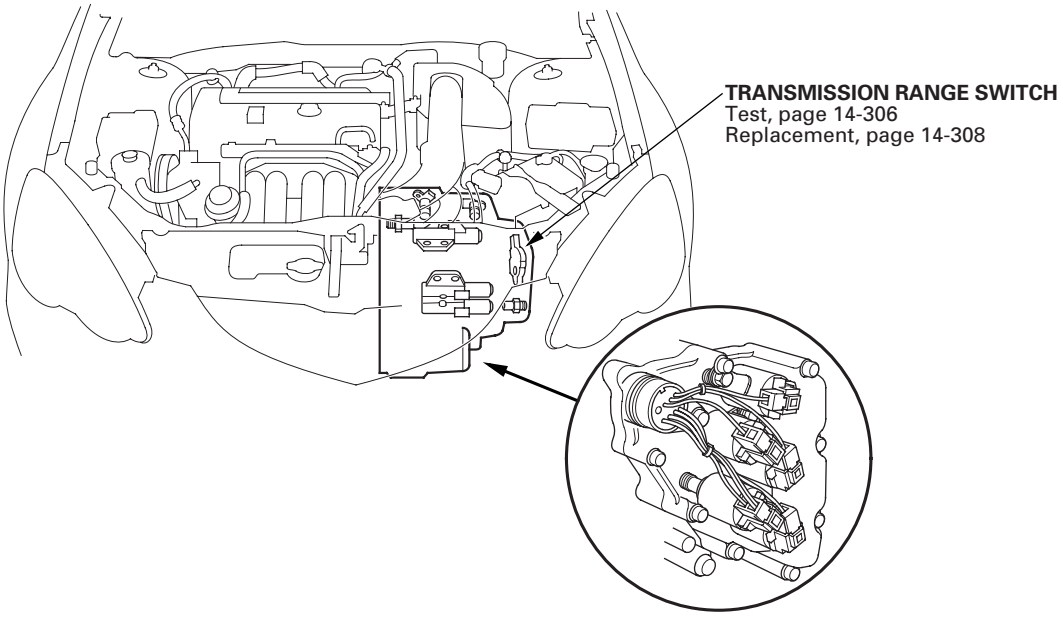

Circuit Diagram

2002-2004 Models

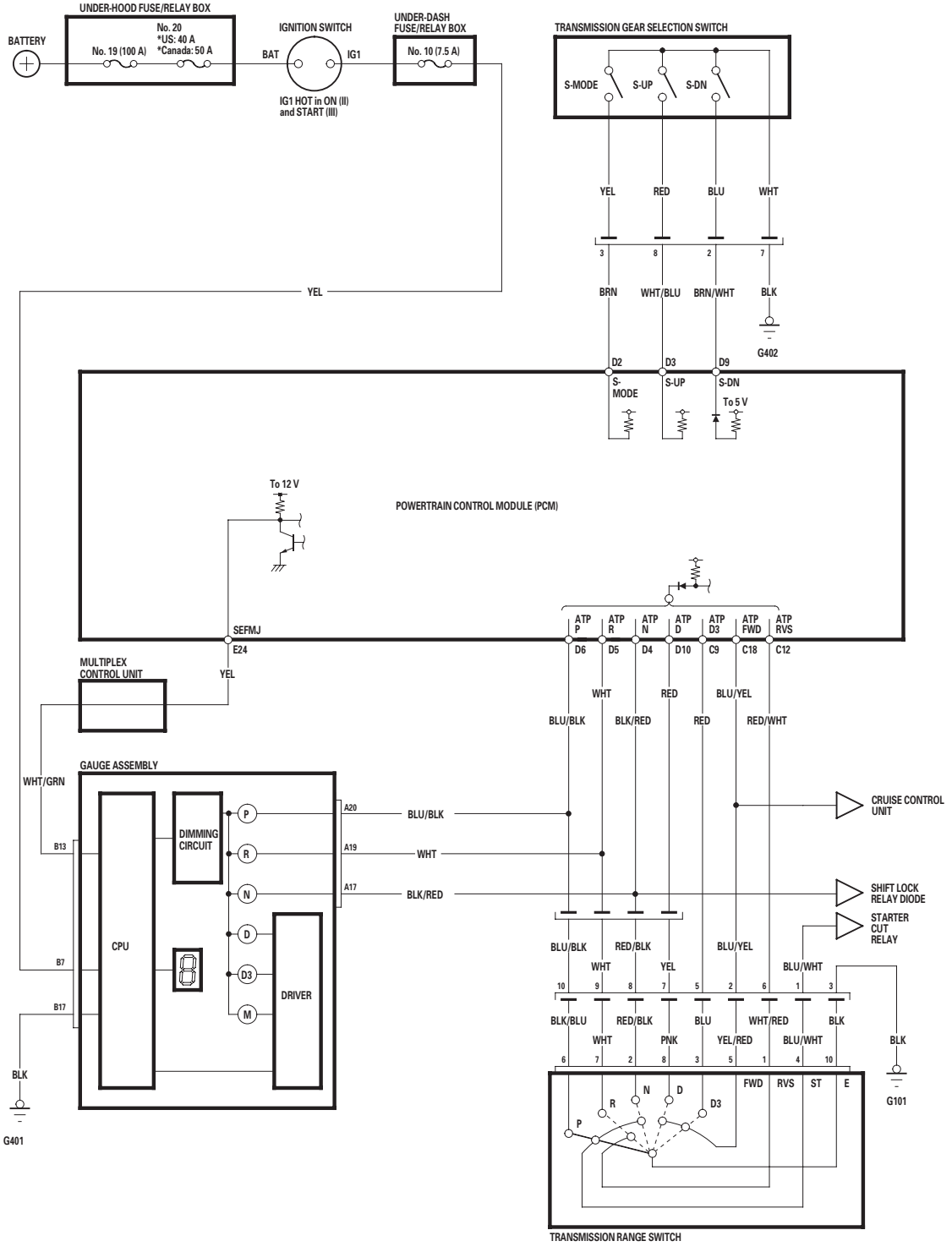

2005-2006 Models

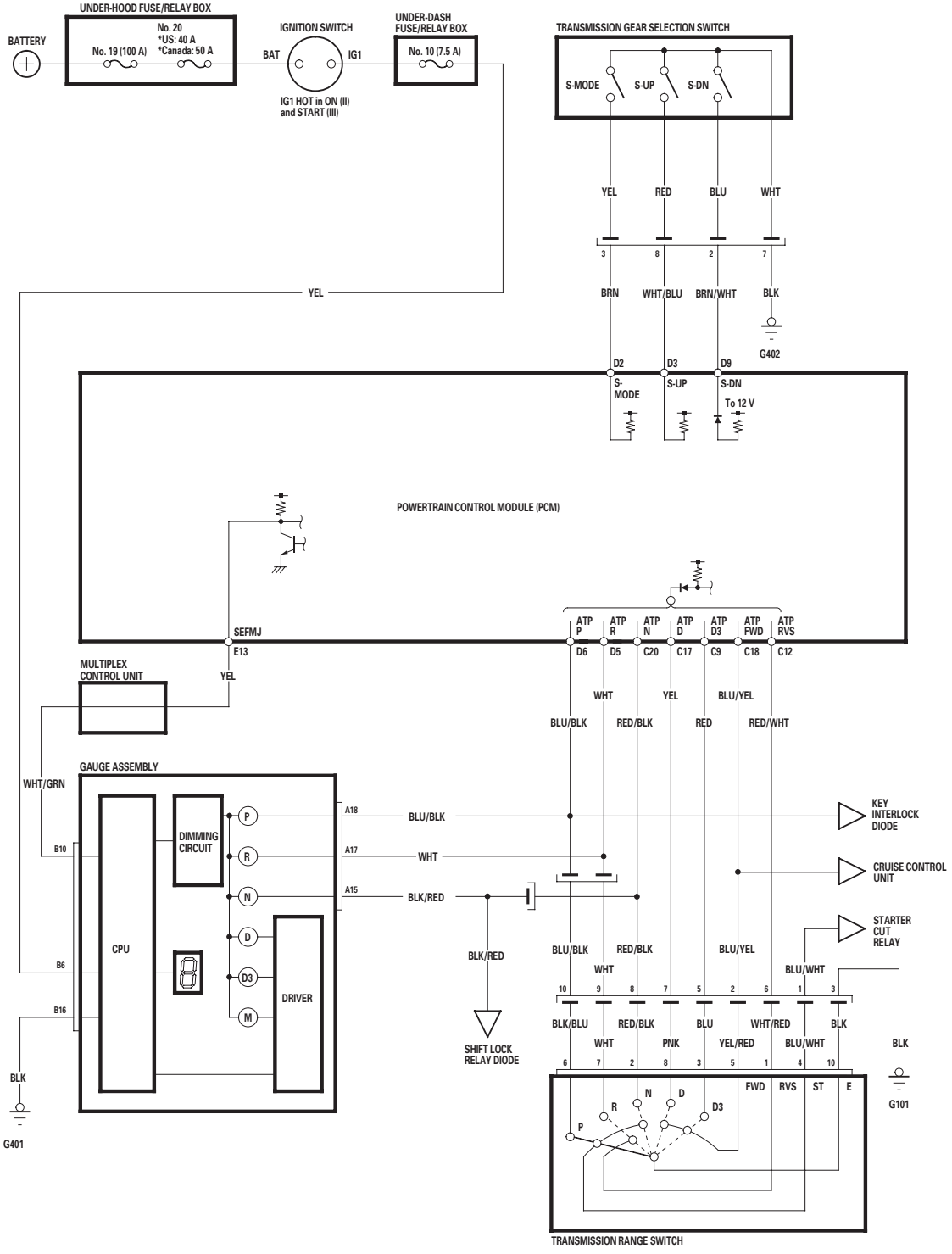

Indicator Input Test

2002-2004 Models

1. If the MIL has been reported on, check for a DTC, and repair the system as indicated by DTC.

2. If the MIL does not come on, and A/T gear position indicator P, R, or N does not come on, remove the gauge assembly from the dashboard, then disconnect the gauge assembly connector A (22P) and B (18P).

3. Inspect the connectors and connector terminals to be sure they are making good contact.

4. If the terminals are bent, loose, or corroded, repair them as necessary, and recheck the system.

5. Turn the ignition switch ON (II).

6. Shift to the P position, and check the voltage between gauge assembly terminal A20 (BLU/BLK) and ground. There should be 0 V in the P position and about 5 V in any other shift lever position. If the test results are different, check for faulty transmission range switch or an open in the wire.

GAUGE ASSEMBLY CONNECTOR A (22P)

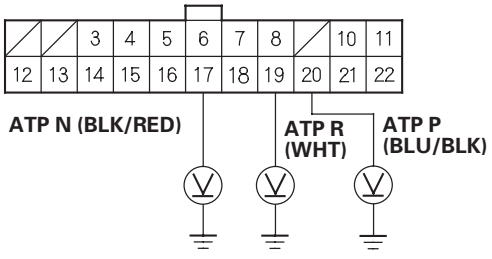

Wire side of female terminals

7. Shift to the R position, and check the voltage between gauge assembly terminal A19 (WHT) and ground. There should be 0 V in the R position and about 5 V in any other shift lever position. If the test results are different, check for faulty transmission range switch or an open in the wire.

8. Shift to the N position, and check the voltage between gauge assembly terminal A17 (BLK/RED) and ground. There should be 0 V in the N position and 5 V in any other shift lever position. If the test results are different, check for faulty transmission range switch or an open in the wire.

9. Check the voltage between gauge assembly terminal B7 (YEL) and ground. There should be battery voltage. If the test result is different, check for a blown No. 10 (7.5 A) fuse in the under-dash fuse/relay box or an open in the wire.

GAUGE ASSEMBLY CONNECTOR B (18P)

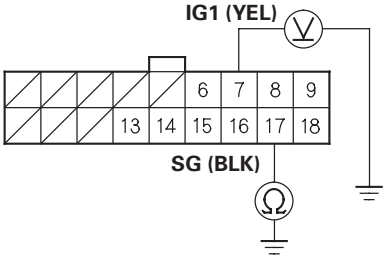

Wire side of female terminals

10. Turn the ignition switch OFF, and check for continuity between gauge assembly terminal B17 terminal and ground. There should be continuity under all conditions. If the test result is different, check for a poor ground (G401) or open in the wire.

11. If all input tests prove OK, but the indicator is faulty, replace the printed circuit board.

2005-2006 Models

1. If the MIL has been reported on, check for a DTC, and repair the system as indicated by DTC.

2. If the MIL does not come on, and A/T gear position indicator P, R, or N does not come on, remove the gauge assembly from the dashboard, then disconnect the gauge assembly connector A (20P) and B (16P).

3. Inspect the connectors and connector terminals to be sure they are making good contact.

4. If the terminals are bent, loose, or corroded, repair them as necessary, and recheck the system.

5. Turn the ignition switch ON (II).

6. Shift to the P position, and check the voltage between gauge assembly terminal A18 (BLU/BLK) and ground. There should be 0 V in the P position and battery voltage in any other shift lever position. If the test results are different, check for faulty transmission range switch or an open in the wire.

GAUGE ASSEMBLY CONNECTOR A (20P)

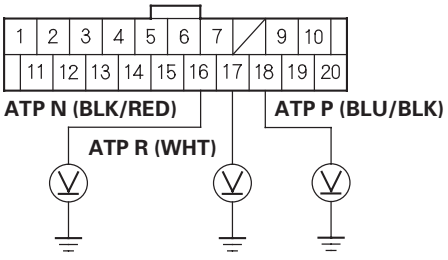

Wire side of female terminals

7. Shift to the R position, and check the voltage between gauge assembly terminal A17 (WHT) and ground. There should be 0 V in the R position and battery voltage in any other shift lever position. If the test results are different, check for faulty transmission range switch or an open in the wire.

8. Shift to the N position, and check the voltage between gauge assembly terminal A16 (BLK/RED) and ground. There should be 0 V in the N position and battery voltage in any other shift lever position. If the test results are different, check for faulty transmission range switch or an open in the wire.

9. Check the voltage between gauge assembly terminal B6 (YEL) and ground. There should be battery voltage. If the test result is different, check for a blown No. 10 (7.5 A) fuse in the under-dash fuse/relay box or an open in the wire.

GAUGE ASSEMBLY CONNECTOR B (16P)

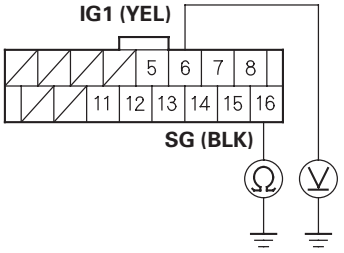

Wire side of female terminals

10. Turn the ignition switch OFF, and check for continuity between gauge assembly terminal B16 and ground. There should be continuity under all conditions. If the test result is different, check for a poor ground (G401) or open in the wire.

11. If all input tests prove OK, but the indicator is faulty, replace the printed circuit board.

Transmission Range Switch Test

1. Remove the transmission range switch harness connector (A) from the connector bracket (B), then disconnect the connector.

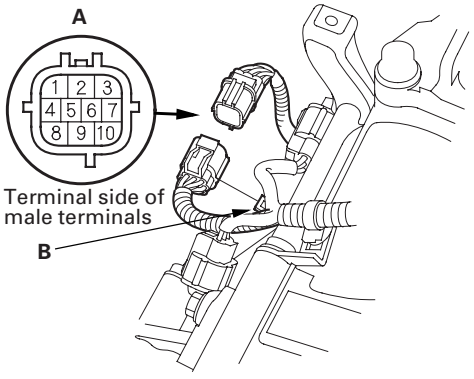

Connector Terminal Specification

Terminal	Signal	Terminal	Signal
1	ATP NP (ST)	6	ATP RVS
2	ATP FWD	7	D
3	Ground (E)	8	N
4	——	9	R
5	D3	10	P

2. Check for continuity between terminals at the harness connector. There should be continuity between the terminals in the following table for each switch position.

Position	Connector Terminal									
	1	2	3	4	5	6	7	8	9	10
P	○		○							○
R			○			○				○
N	○		○					○		
D		○	○				○			
D3		○	○		○					

3. If there is no continuity between any terminals, remove the transmission range switch cover, and disconnect the connector at the switch.

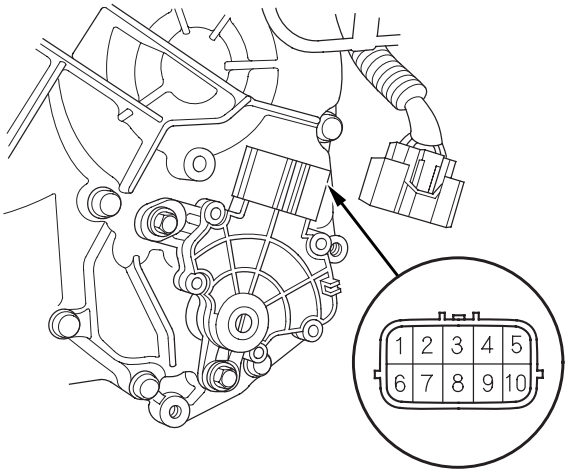

Connector Terminal Specification

Terminal	Signal	Terminal	Signal
1	ATP RVS	6	P
2	N	7	R
3	D3	8	D
4	ATP NP (ST)	9	——
5	ATP FWD	10	Ground (E)

4. Check for continuity between terminals at the harness connector. There should be continuity between the terminals in the following table for each switch position.

Position	Connector Terminal									
	1	2	3	4	5	6	7	8	9	10
P				○		○				○
R	○						○			○
N		○		○						○
D					○			○		○
D3			○		○					○

5. If there is no continuity between any terminals, check the transmission range switch installation. If the transmission range switch installation is OK, replace the switch.
   If the transmission range switch continuity check was OK, replace the faulty transmission range switch harness.

Transmission Range Switch Replacement

1. Raise the vehicle, and make sure it is securely supported.

2. Shift to the N position.

3. Remove the transmission range switch cover.

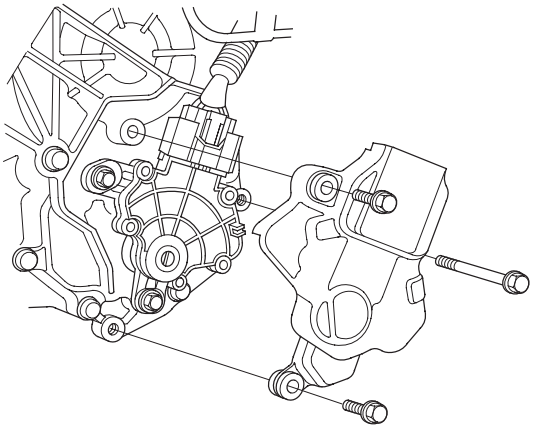

4. Disconnect the transmission range switch connector.

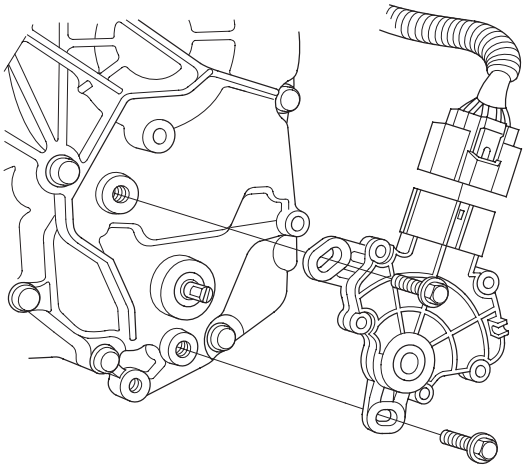

5. Remove the old transmission range switch, and install the new switch.

6. Make sure that the selector control shaft is in the N position. If necessary, move the shift lever to the N position.

   NOTE: Do not use the selector control shaft to adjust the shift position. If the control shaft tips are squeezed together it will cause a faulty signal or position due to play between the selector control shaft and the switch.

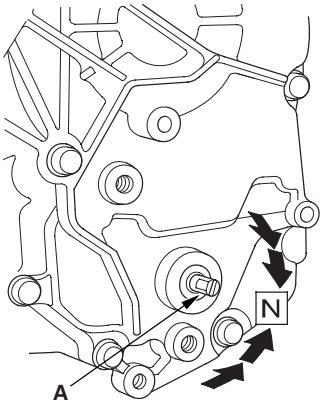

7. Align the cutout (A) on the rotary-frame with the neutral positioning cutouts (B) on the transmission range switch (C), then put a 2.0 mm (0.08 in.) feeler gauge blade (D) in the cutouts to hold it in the N position.

   NOTE: Be sure to use a 2.0 mm (0.08 in.) blade or equivalent to hold the switch in the N position.

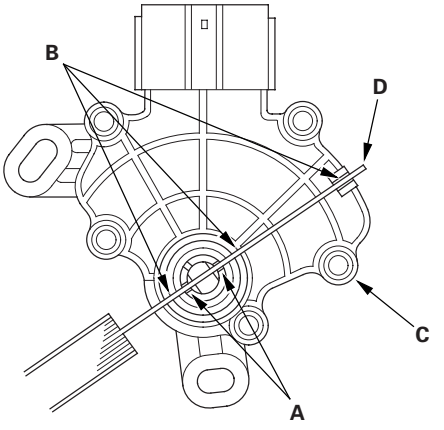

8. Install the transmission range switch (A) gently on the selector control shaft (B) with holding the N position with the 2.0 mm (0.08 in.) blade (C).

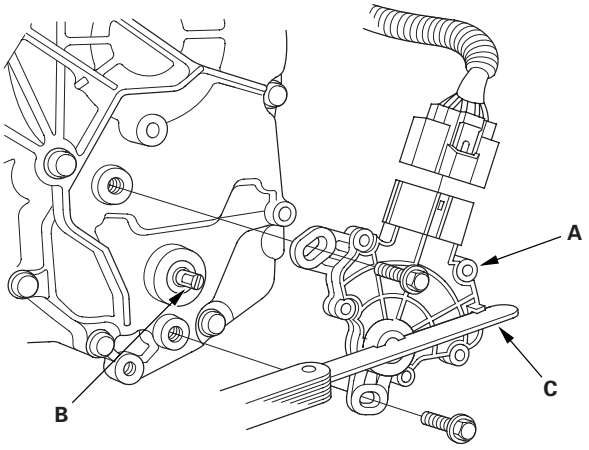

9. Tighten the bolts on the transmission range switch while you continue to hold the N position. Do not move the transmission range switch when tightening the bolts. Remove the feeler gauge.

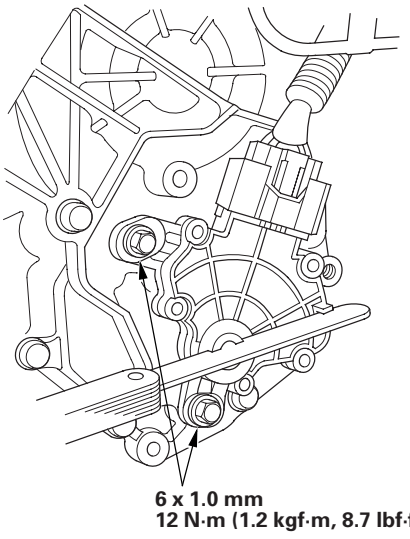

10. Connect the connector securely, then install the transmission range switch cover (A).

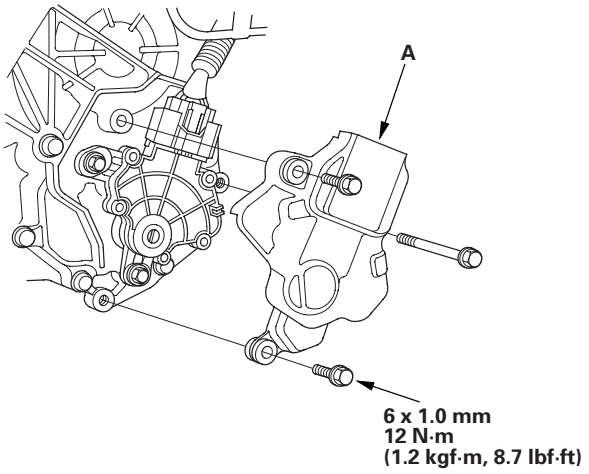

11. Turn the ignition switch ON (II). Move the shift lever through all gear positions, and check the transmission range switch synchronization with the A/T gear position indicator.

12. Check that the engine can start in P and N positions, and cannot start in any other shift lever position.

13. Check that the back-up lights come on when the shift lever is in the R position.

14. Allow the wheels to rotate freely, then start the engine, and check the shift lever operation.

Component Location Index

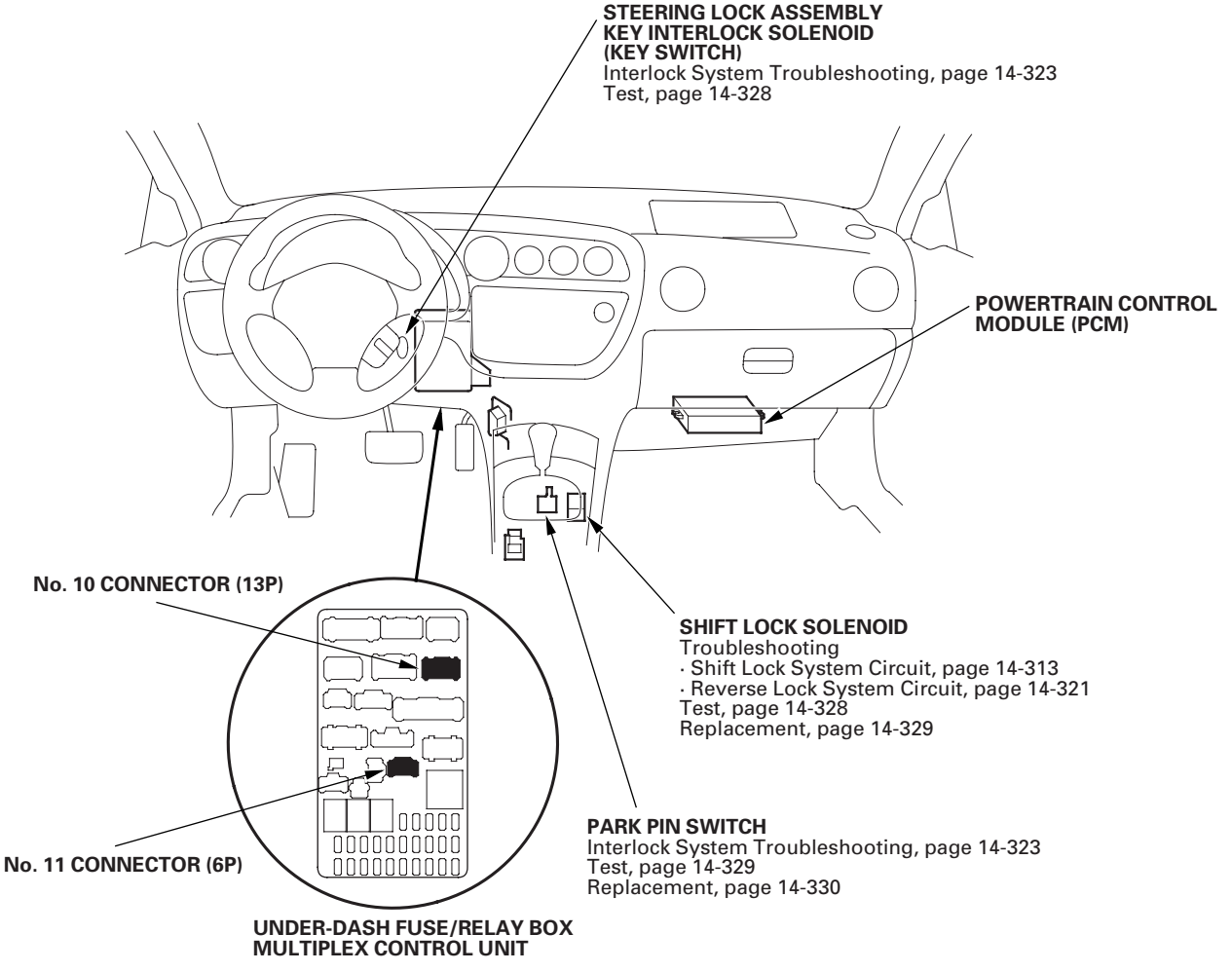

Circuit Diagram

2002-2004 Models

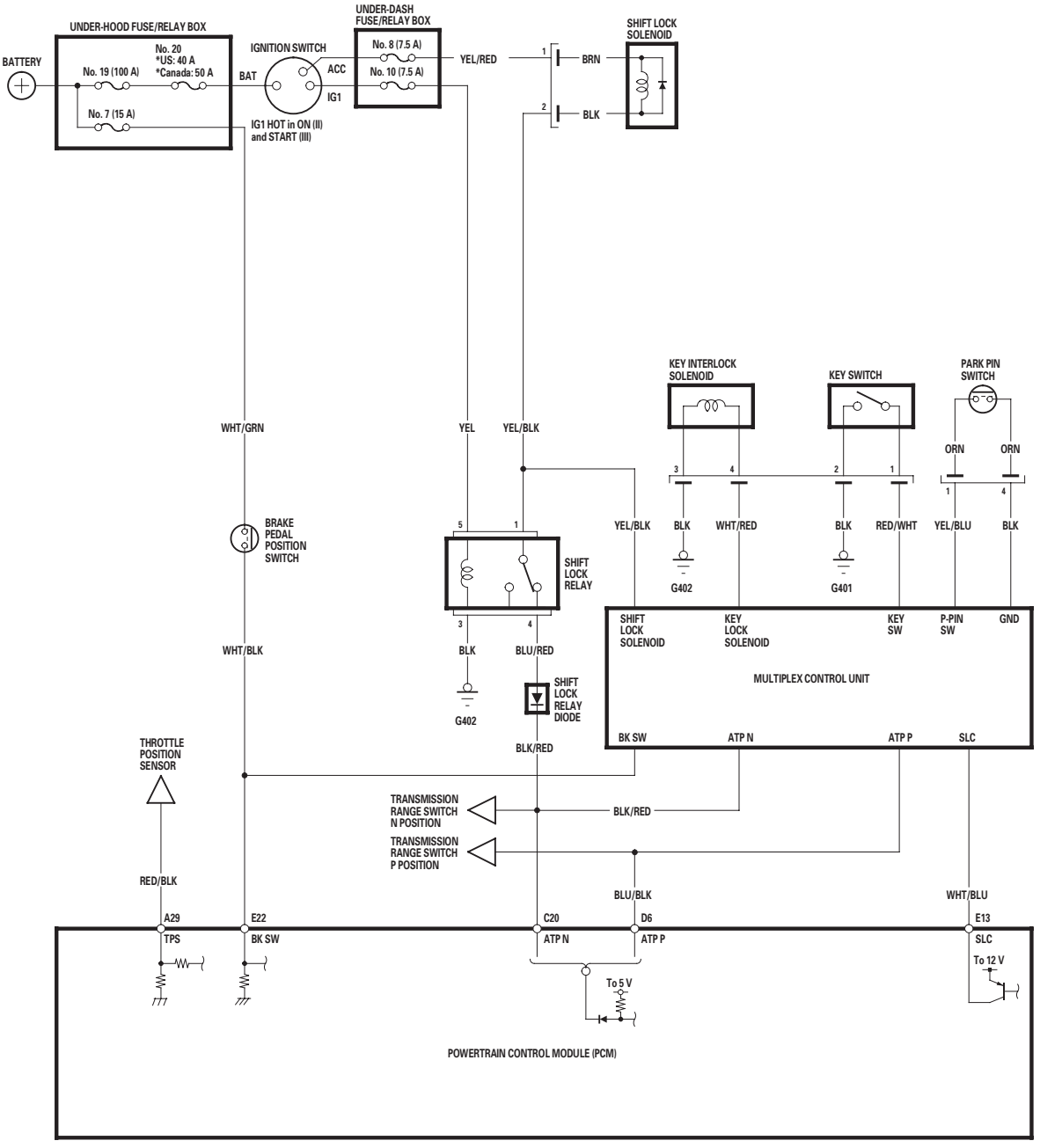

Circuit Diagram (cont'd)

2005-2006 Models

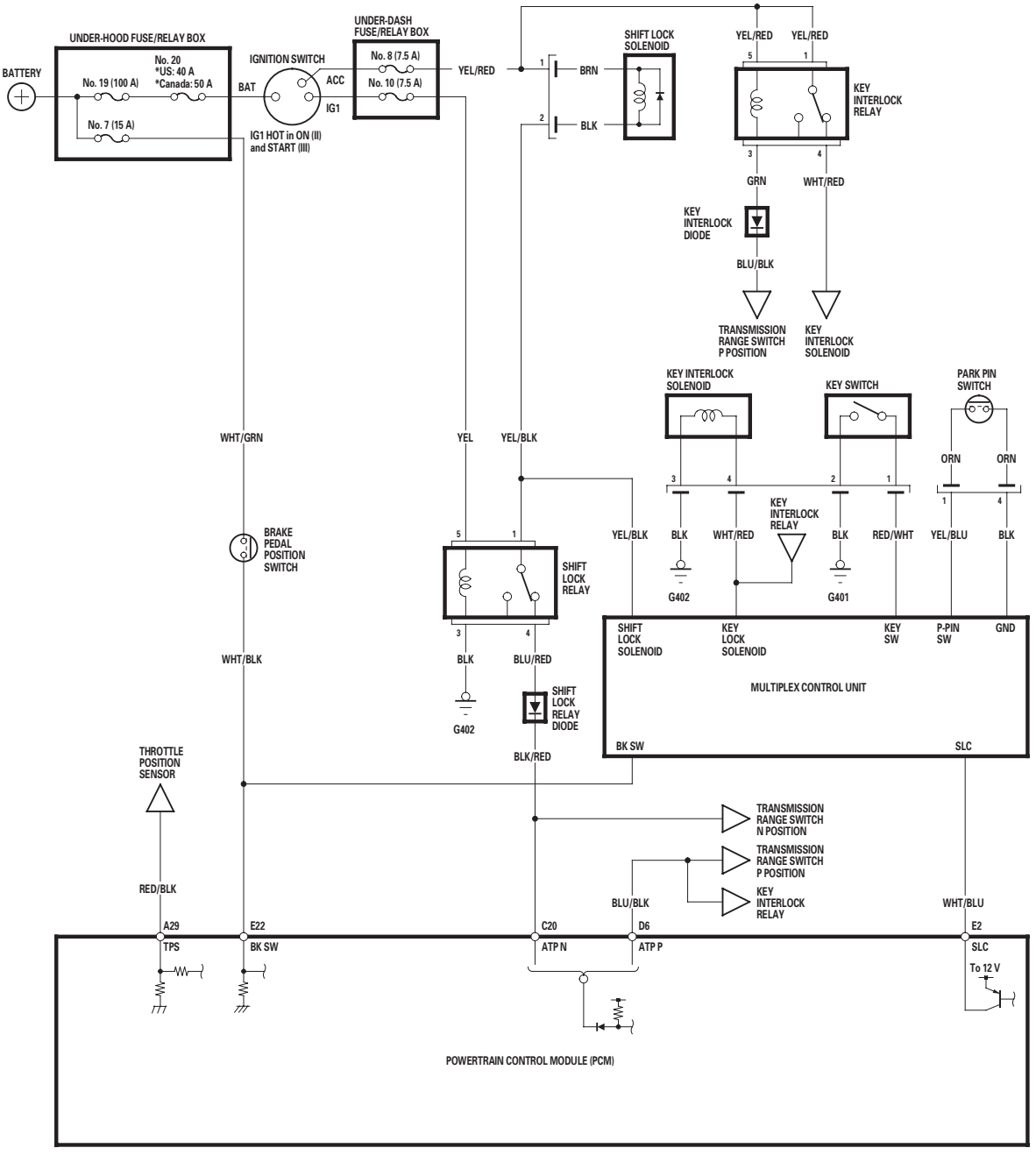

Shift Lock System Circuit Troubleshooting

2002-2004 Models

1. Press the brake pedal.

   Are the brake lights ON?

   YES—Go to step 2.

   NO—Repair faulty brake light circuit. ■

2. Turn the ignition switch ON (II), and shift to the P position.

3. Press the brake pedal, release the accelerator pedal, and measure the voltage between PCM connector terminal E13 and body ground.

PCM CONNECTOR E (31P)

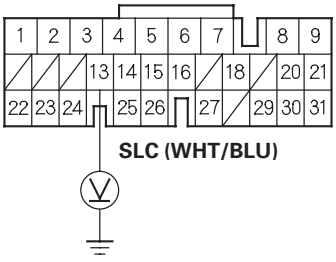

Wire side of female terminals

Is there 5 V—battery voltage?

YES—Go to step 4.

NO—Go to step 8.

4. Remove the under-dash fuse/relay box from the dash.

5. Measure the voltage between No. 10 connector (13P) terminal No. 13 and body ground with the accelerator pedal released and brake pedal pressed.

No. 10 CONNECTOR (13P)

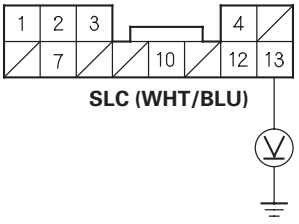

Wire side of female terminals

Is there 5 V—battery voltage?

YES—Go to step 6.

NO—Repair open in the wire between PCM connector terminal E13 and the multiplex control unit (via the No. 10 connector (13P) of the under-dash fuse/relay box). ■

6. Measure the voltage between No. 11 connector (6P) terminal No. 3 of the under-dash fuse/relay box and body ground.

No. 11 CONNECTOR (6P)

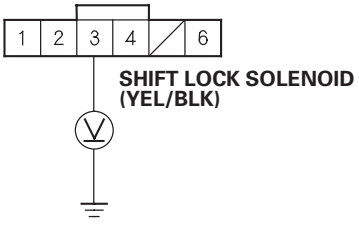

Wire side of female terminals

Is there 5 V—battery voltage?

YES—Go to step 7.

NO—Repair open in the wire between the shift lock solenoid connector and multiplex control unit (via the No. 11 connector (6P) of the under-dash fuse/relay box). ■

(cont'd)

Shift Lock System Circuit Troubleshooting (cont'd)

7. Turn the ignition switch OFF, move the shift lever to the P position, and then turn the ignition switch ON (II).

   Does the P indicator in the gauge assembly illuminate?

   YES—Check for loose terminal fit in the under-dash fuse/relay box connectors. If necessary, substitute a known-good multiplex control unit and recheck. ■

   NO—Repair open in the P position wire between the multiplex control unit and the transmission range switch. ■

8. Turn the ignition switch OFF.

9. Disconnect PCM connectors A (31P) and E (31P).

10. Press the brake pedal, and measure the voltage between PCM connector terminal E22 and A24.

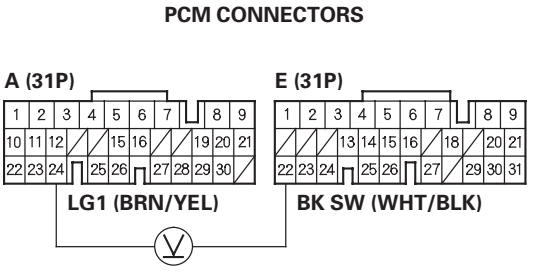

Wire side of female terminals

   Is there battery voltage?

   YES—Release the brake pedal, and go to step 11.

   NO—Repair open in the wire between PCM connector terminal E22 and the brake pedal position switch. ■

11. Reconnect PCM connectors A (31P) and E (31P).

12. Turn the ignition switch ON (II).

13. Measure the voltage between PCM connector terminal A15 and A24.

PCM CONNECTOR A (31P)

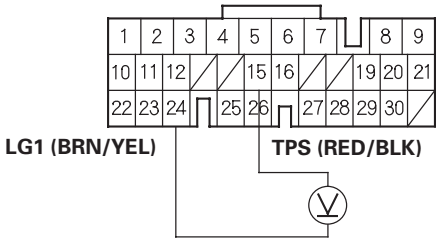

Wire side of female terminals

Is there about 0.5 V?

YES—Go to step 18.

NO—Go to step 14.

14. Turn the ignition switch OFF.

15. Disconnect the throttle position (TP) sensor connector.

16. Turn the ignition switch ON (II).

17. Measure the voltage between TP sensor connector terminals No. 1 and No. 3.

TP SENSOR CONNECTOR

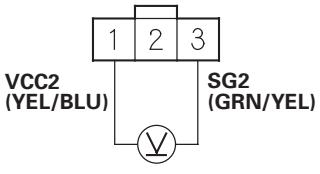

Wire side of female terminals

Is there about 5 V?

YES—Check for an open or a short in the wire between PCM connector terminal A15 and TP sensor. If the wire is OK, replace the TP sensor. ■

NO—Go to step 18.

18. Turn the ignition switch OFF.

19. Disconnect PCM connector A (31P).

20. Check for continuity between TP sensor connector terminal No. 3 and body ground.

TP SENSOR CONNECTOR

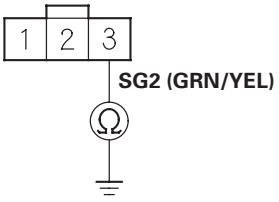

Wire side of female terminals

Is there continuity?

YES—Check for a short to ground in the wire between TP sensor connector terminal No. 3 and PCM. If the wire is OK, replace the PCM. ■

NO—Go to step 21.

(cont'd)

Shift Lock System Circuit Troubleshooting (cont'd)

21. Disconnect shift lock solenoid connector.

22. Turn the ignition switch ON (II).

23. Measure the voltage between shift lock solenoid connector terminals.

SHIFT LOCK SOLENOID CONNECTOR

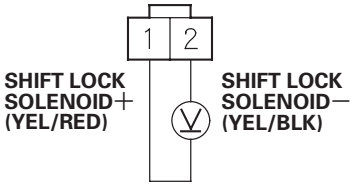

Wire side of female terminals

Is there 5 V−battery voltage?

YES—Go to step 24.

NO—Check for blown No. 8 fuse in the under-dash fuse/relay box. If the fuse is OK, repair open or short in the wire between the shift lock solenoid connector and the under-dash fuse/relay box. ■

24. Connect the battery positive terminal to shift lock solenoid connector terminal No. 1, and connect the battery negative terminal to terminal No. 2, then check that the shift lock solenoid operates.

NOTE: Do not connect the battery positive terminal to terminal No. 2 or you will damage the diode inside the shift lock solenoid.

SHIFT LOCK SOLENOID CONNECTOR

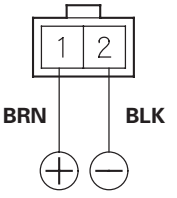

Terminal side of male terminals

Does the shift lock solenoid operate properly?

YES—Check for an open in the wire between the shift lock solenoid connector and the multiplex control unit. If the wire is OK, check for a loose terminal fit in the multiplex control unit connectors. If necessary, substitute a known-good multiplex control unit and recheck. ■

NO—Replace the shift lock solenoid. ■

2005-2006 Models

1. Press the brake pedal.

   Are the brake lights ON?

   YES—Go to step 2.

   NO—Repair faulty brake light circuit. ■

2. Turn the ignition switch ON (II), and shift to the P position.

3. Press the brake pedal, release the accelerator pedal, and measure the voltage between PCM connector terminal E2 and body ground.

PCM CONNECTOR E (31P)

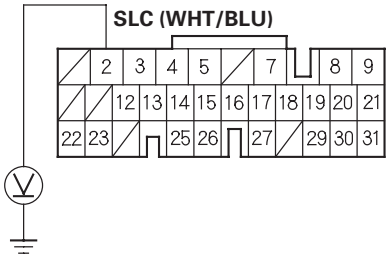

Wire side of female terminals

Is there 5 V—battery voltage?

YES—Go to step 4.

NO—Go to step 8.

4. Remove the under-dash fuse/relay box from the dash.

5. Measure the voltage between No. 10 connector (13P) terminal No. 13 and body ground with the accelerator pedal released and brake pedal pressed.

No. 10 CONNECTOR (13P)

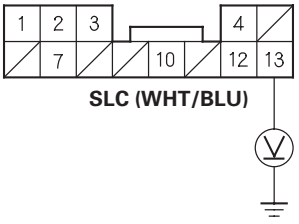

Wire side of female terminals

Is there 5 V—battery voltage?

YES—Go to step 6.

NO—Repair open in the wire between PCM connector terminal E13 and the multiplex control unit (via the No. 10 connector (13P) of the under-dash fuse/relay box). ■

6. Measure the voltage between No. 11 connector (6P) terminal No. 3 of the under-dash fuse/relay box and body ground.

No. 11 CONNECTOR (6P)

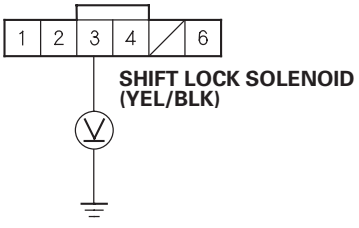

Wire side of female terminals

Is there 5 V—battery voltage?

YES—Go to step 7.

NO—Repair open in the wire between the shift lock solenoid connector and multiplex control unit (via the No. 11 connector (6P) of the under-dash fuse/relay box). ■

(cont'd)

Shift Lock System Circuit Troubleshooting (cont'd)

7. Turn the ignition switch OFF, move the shift lever to the P position, and then turn the ignition switch ON (II).

   Does the P indicator in the gauge assembly illuminate?

   YES—Check for loose terminal fit in the under-dash fuse/relay box connectors. If necessary, substitute a known-good multiplex control unit and recheck. ■

   NO—Repair open in the P position wire between the multiplex control unit and the transmission range switch. ■

8. Turn the ignition switch OFF.

9. Jump the SCS line with the HDS.

10. Disconnect PCM connectors A (31P) and E (31P).

11. Press the brake pedal, and measure the voltage between PCM connector terminal E22 and A9.

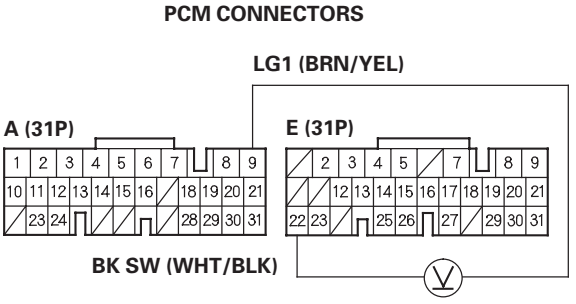

   Is there battery voltage?

   YES—Release the brake pedal, and go to step 12.

   NO—Repair open in the wire between PCM connector terminal E22 and the brake pedal position switch. ■

12. Reconnect PCM connectors A (31P) and E (31P).

13. Turn the ignition switch ON (II).

14. Measure the voltage between PCM connector terminal A29 and A9.

PCM CONNECTOR A (31P)

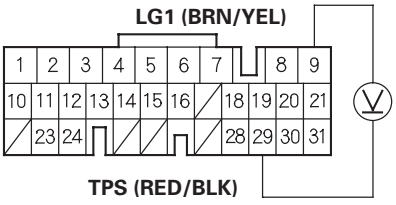

Wire side of female terminals

Is there about 0.5 V?

YES—Go to step 19.

NO—Go to step 15.

15. Turn the ignition switch OFF.

16. Disconnect the throttle position (TP) sensor connector.

17. Turn the ignition switch ON (II).

18. Measure the voltage between TP sensor connector terminals No. 1 and No. 3.

TP SENSOR CONNECTOR

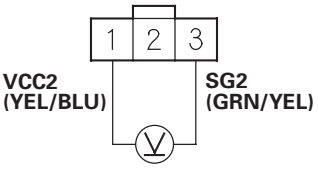

Wire side of female terminals

Is there about 5 V?

YES—Check for an open or a short in the wire between PCM connector terminal A29 and TP sensor. If the wire is OK, replace the TP sensor. ■

NO—Go to step 19.

19. Turn the ignition switch OFF.

20. Disconnect PCM connector A (31P).

21. Check for continuity between TP sensor connector terminal No. 3 and body ground.

TP SENSOR CONNECTOR

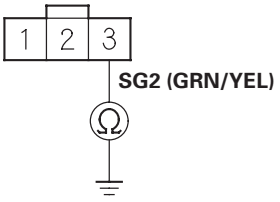

Wire side of female terminals

Is there continuity?

YES—Check for a short to ground in the wire between TP sensor connector terminal No. 3 and PCM. If the wire is OK, replace the PCM. ■

NO—Go to step 22.

(cont'd)

Shift Lock System Circuit Troubleshooting (cont'd)

22. Disconnect shift lock solenoid connector.

23. Turn the ignition switch ON (II).

24. Measure the voltage between shift lock solenoid connector terminals.

SHIFT LOCK SOLENOID CONNECTOR

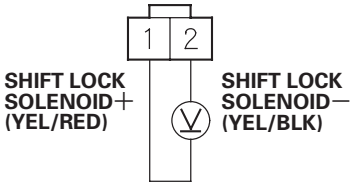

Wire side of female terminals

Is there 5 V—battery voltage?

YES—Go to step 25.

NO—Check for blown No. 8 fuse in the under-dash fuse/relay box. If the fuse is OK, repair open or short in the wire between the shift lock solenoid connector and the under-dash fuse/relay box. ■

25. Connect the battery positive terminal to shift lock solenoid connector terminal No. 1, and connect the battery negative terminal to terminal No. 2, then check that the shift lock solenoid operates.

NOTE: Do not connect the battery positive terminal to terminal No. 2 or you will damage the diode inside the shift lock solenoid.

SHIFT LOCK SOLENOID CONNECTOR

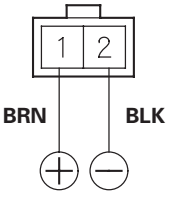

Terminal side of male terminals

Does the shift lock solenoid operate properly?

YES—Check for an open in the wire between the shift lock solenoid connector and the multiplex control unit. If the wire is OK, check for a loose terminal fit in the multiplex control unit connectors. If necessary, substitute a known-good multiplex control unit and recheck. ■

NO—Replace the shift lock solenoid. ■

Reverse Lock System Circuit Troubleshooting

1. Check whether the DTC P1705 or P1706 (2002-2004 models), P0705, P0706, and P0812 (2005-2006 models) is indicated.

   Does the scan tool or the HDS indicate code 2002-2004 models: P1705 or P1706, 2005-2006 models: P0705, P0706, and P0812?

   YES—Perform the troubleshooting for the indicated code(s). ■

   NO—Go to step 2.

2. Turn the ignition switch OFF.

3. Shift the shift lever to the P position while pushing the shift lock release.

4. Turn the ignition switch ON (II).

5. Press the brake pedal and release the accelerator pedal, shift the shift lever out of the P position, and check that the shift lock solenoid operates.

   Does the shift lever move out of the P position?

   YES—Go to step 6.

   NO—Perform the Shift Lock System Circuit Troubleshooting:

   - 2002-2004 models (see page 14-313).
   - 2005-2006 models (see page 14-317).

6. Shift to the N position.

7. Turn the ignition switch to the ACC (I) position.

8. Check that the shift lever shifts into the R position.

   Does the shift lever shift into the R position?

   YES—Check for loose terminal fit in the PCM and multiplex control unit connectors. If necessary, substitute a known-good PCM and multiplex control unit, and recheck. ■

   NO—Go to step 9.

9. Turn the ignition switch OFF.

10. Remove the shift lock relay, and check for continuity between these terminals:

    - No. 3 and No. 5
    - No. 1 and No. 4
    - No. 1 and No. 2 while connecting battery voltage to terminals No. 3 and No. 5, and also check for no continuity between terminals No. 1 and No. 4.

SHIFT LOCK RELAY

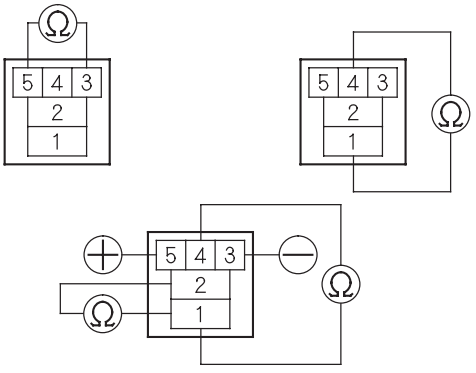

Terminal side of male terminals

Does the shift lock relay test OK?

YES—Go to step 11.

NO—Replace the shift lock relay. ■

11. Turn the ignition switch to the ACC (I) position.

(cont'd)

Reverse Lock System Circuit Troubleshooting (cont'd)

12. Measure the voltage between the shift lock relay connector terminal No. 1 and body ground.

SHIFT LOCK RELAY CONNECTOR

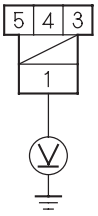

Wire side of female terminals

Is there voltage?

YES—Go to step 13.

NO—Check for blown No. 8 fuse in the under-dash fuse/relay box. If the fuse is OK, repair open in the wire between the shift lock relay connector terminal No. 1 and the shift lock solenoid connector. ■

13. Turn the ignition switch ON (II).

14. Measure the voltage between the shift lock relay connector terminal No. 3 and body ground.

SHIFT LOCK RELAY CONNECTOR

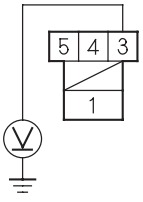

Wire side of female terminals

Is there battery voltage?

YES—Go to step 15.

NO—Check for blown No. 10 (7.5 A) fuse in the under-dash fuse/relay box. If the fuse is OK, repair open in the wire between the shift lock relay connector terminal No. 3 and the under-dash fuse/relay box. ■

15. Measure the voltage between the shift lock relay connector terminal No. 3 and No. 5.

SHIFT LOCK RELAY CONNECTOR

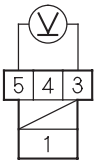

Wire side of female terminals

Is there battery voltage?

YES—Repair open in the wire between the shift lock relay connector terminal No. 4 and the transmission range switch. ■

NO—Repair open in the wire between the shift lock relay connector terminal No. 5 and ground (G402), or repair poor ground (G402). ■

Key Interlock System Circuit Troubleshooting

2002-2004 Models

1. Disconnect steering lock assembly connector (6P).

2. Turn the ignition key to ACC (I) or ON (II).

3. Connect the steering lock assembly connector (6P) terminal No. 4 to the battery positive terminal, and connect the battery negative terminal to No. 3 terminal.

STEERING LOCK ASSEMBLY CONNECTOR (6P)

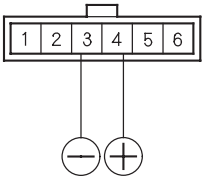

Terminal side of male terminals

4. Check the key interlock solenoid operation. A clicking sound should be heard while the ignition key is in ACC (I) and ON (II), and you should not be able to turn it to OFF (0) position.

   Does the key interlock solenoid operate properly?

   YES—Go to step 5.

   NO—Faulty key interlock solenoid/switch. Replace the ignition key cylinder/steering lock assembly. ■

5. Check for continuity between the steering lock assembly connector (6P) terminal No. 3 and ground.

STEERING LOCK ASSEMBLY CONNECTOR (6P)

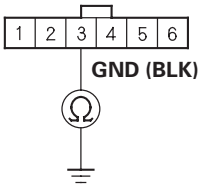

Wire side of female terminals

   Is there continuity?

   YES—Go to step 6.

   NO—Repair open in the wire between the steering lock assembly connector (6P) terminal No. 3 and ground (G402), or repair poor ground (G402). ■

6. Turn the ignition switch ON (II), and measure the voltage between the steering lock assembly connector (6P) terminal No. 3 and No. 4.

STEERING LOCK ASSEMBLY CONNECTOR (6P)

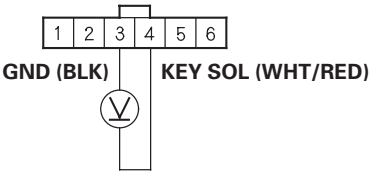

Wire side of female terminals

   Is there voltage?

   YES—Go to step 7.

   NO—Check for open or short in the wire between the steering lock assembly connector (6P) terminal No. 4 and the multiplex control unit. If the wire is OK, check for loose terminal fit in the multiplex control unit connectors. If necessary, substitute a known-good multiplex control unit and recheck. ■

(cont'd)

Key Interlock System Circuit Troubleshooting (cont'd)

7. Disconnect the transmission gear selection switch/ park pin switch connector.

8. Check for continuity between the transmission gear selection switch/park pin switch connector terminal No. 1 and No. 4 while you move the shift lever in and out of the P position.

TRANSMISSION GEAR SELECTION SWITCH/PARK PIN SWITCH CONNECTOR

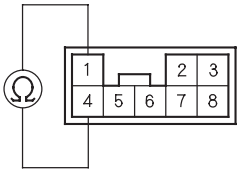

Terminal side of male terminals

Is there no continuity with the shift lever in the P position, and continuity with the shift lever in any position other than P?

YES—Repair open or short in the wires between the transmission gear selection switch/park pin switch connector and the multiplex control unit. If wires are OK, check for loose terminal fit in the multiplex control unit connectors. If necessary, substitute a known-good multiplex control unit and recheck. ■

NO—Inspect the park pin linkage. If the linkage is OK, replace the park pin switch. ■

2005-2006 Models

1. Check the DTC P0705, P0706, and P0812 is indicated.

   Does the HDS indicate code P0705, P0706, and P0812?

   YES—Perform the troubleshooting for the indicated code(s). ■

   NO—Go to step 2.

2. Turn the ignition switch OFF.

3. Remove the key interlock relay, and check for continuity between these terminals:

   - No. 3 and No. 5
   - No. 1 and No. 4
   - No. 1 and No. 2 while connecting battery voltage to terminals No. 3 and No. 5, and also check for no continuity between terminals No. 1 and No. 4.

KEY INTERLOCK RELAY

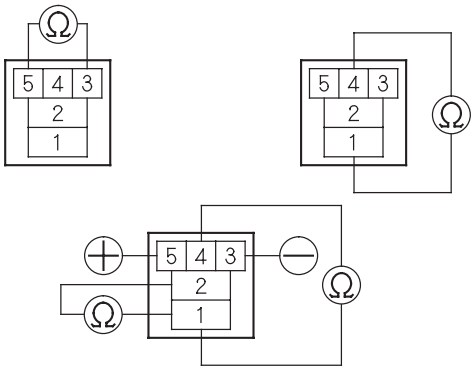

Terminal side of male terminals

Does the key interlock relay test OK?

YES—Go to step 4.

NO—Replace the key interlock relay. ■

4. Turn the ignition switch to the ACC (I) position.

5. Measure the voltage between the key interlock relay connector terminal No. 1 and body ground.

KEY INTERLOCK RELAY CONNECTOR

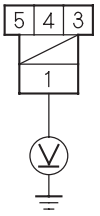

Wire side of female terminals

Is there battery voltage?

YES—Go to step 6.

NO—Check for blown No. 8 fuse in the under-dash fuse/relay box. If the fuse is OK, repair open in the wire between the key interlock relay connector terminal No. 1 and the under-dash fuse/relay box. ■

6. Measure the voltage between the key interlock relay connector terminal No. 5 and body ground.

KEY INTERLOCK RELAY CONNECTOR

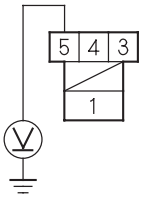

Wire side of female terminals

Is there battery voltage?

YES—Go to step 7.

NO—Check for blown No. 8 (7.5 A) fuse in the under-dash fuse/relay box. If the fuse is OK, repair open in the wire between the key interlock relay connector terminal No. 5 and the under-dash fuse/relay box. ■

(cont'd)

Key Interlock System Circuit Troubleshooting (cont'd)

7. Measure the voltage between the key interlock relay connector terminal No. 3 and No. 5.

KEY INTERLOCK RELAY CONNECTOR

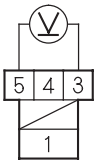

Wire side of female terminals

Is there battery voltage?

YES—Go to step 8.

NO—Repair open in the wire between the key interlock relay connector terminal No. 3 and ground (G101), or repair poor ground (G101). ■

8. Turn the ignition switch OFF.

9. Disconnect steering lock assembly connector (6P).

10. Turn the ignition key to ACC (I) or ON (II).

11. Connect the steering lock assembly connector (6P) terminal No. 4 to the battery positive terminal, and connect the battery negative terminal to terminal No. 3.

STEERING LOCK ASSEMBLY CONNECTOR (6P)

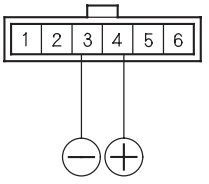

Terminal side of male terminals

12. Check the key interlock solenoid operation. A clicking sound should be heard while the ignition key is in ACC (I) and ON (II), and you should not be able to turn it to OFF (0) position.

Does the key interlock solenoid operate properly?

YES—Go to step 13.

NO—Faulty key interlock solenoid/switch. Replace the ignition key cylinder/steering lock assembly. ■

13. Check for continuity between the steering lock assembly connector (6P) terminal No. 3 and ground.

STEERING LOCK ASSEMBLY CONNECTOR (6P)

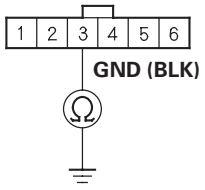

Wire side of female terminals

Is there continuity?

YES—Go to step 14.

NO—Repair open in the wire between the steering lock assembly connector (6P) terminal No. 3 and ground (G402), or repair poor ground (G402). ■

14. Turn the ignition switch ON (II), and measure the voltage between the steering lock assembly connector (6P) terminal No. 3 and No. 4.

STEERING LOCK ASSEMBLY CONNECTOR (6P)

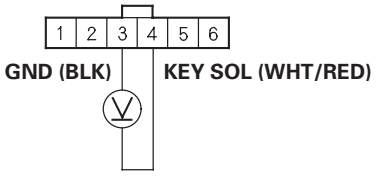

Wire side of female terminals

Is there voltage?

YES—Go to step 15.

NO—Check for open or short in the wire between the steering lock assembly connector (6P) terminal No. 4 and the multiplex control unit. If the wire is OK, check for loose terminal fit in the multiplex control unit connectors. If necessary, substitute a known-good multiplex control unit and recheck. ■

15. Disconnect the transmission gear selection switch/park pin switch connector.

16. Check for continuity between the transmission gear selection switch/park pin switch connector terminal No. 1 and No. 4 while you move the shift lever in and out of the P position.

TRANSMISSION GEAR SELECTION SWITCH/PARK PIN SWITCH CONNECTOR

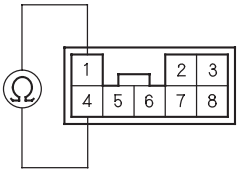

Terminal side of male terminals

Is there no continuity with the shift lever in the P position, and continuity with the shift lever in any position other than P?

YES—Repair open or short in the wires between the transmission gear selection switch/park pin switch connector and the multiplex control unit. If wires are OK, check for loose terminal fit in the multiplex control unit connectors. If necessary, substitute a known-good multiplex control unit and recheck. ■

NO—Inspect the park pin linkage. If the linkage is OK, replace the park pin switch. ■

Key Interlock Solenoid Test

1. Remove the driver's dashboard lower cover.
2. Remove the lower steering column cover.
3. Disconnect the steering lock assembly connector (6P). Insert the ignition key in the key cylinder, then turn the ignition key to ACC (I).
4. Connect the steering lock assembly connector (6P) terminal No. 4 to the battery positive terminal, and connect the battery negative terminal to terminal No. 3. Try to turn the ignition key to LOCK (0) and then remove from the key cylinder.
5. If the ignition key cannot be turned and removed from the cylinder, replace the ignition key cylinder/ steering lock assembly.

STEERING LOCK ASSEMBLY CONNECTOR (6P)

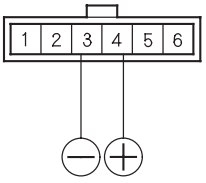

Terminal side of male terminals

Shift Lock Solenoid Test

1. Remove the shift lever console panel.
2. Disconnect shift lock solenoid connector.

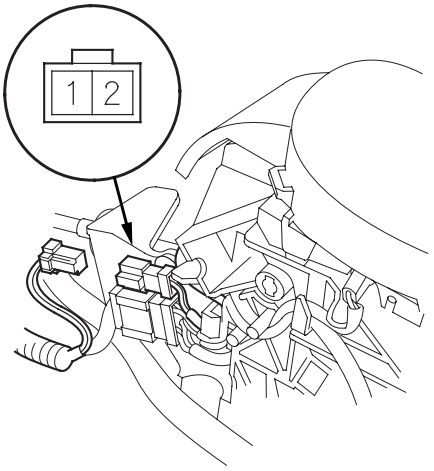

3. Connect the battery positive terminal to shift solenoid connector terminal No. 1, and connect the battery negative terminal to terminal No. 2.
4. Check that the shift lever can be moved from the P position. Release the battery terminals from the shift lock solenoid connector. Move the shift lever back to the P position, and make sure it locks.

   NOTE: Do not connect power to terminal No. 2 or you will damage the diode inside the solenoid.
5. Check that the shift lock releases when the shift lock release is pushed, and check that it locks when the shift lock release is released.
6. If the shift lock solenoid does not work properly, replace it.

Shift Lock Solenoid Replacement

1. Remove the center console (see page 20-59).

2. Disconnect shift lock solenoid connector (A), and remove it from the shift lever bracket base (B).

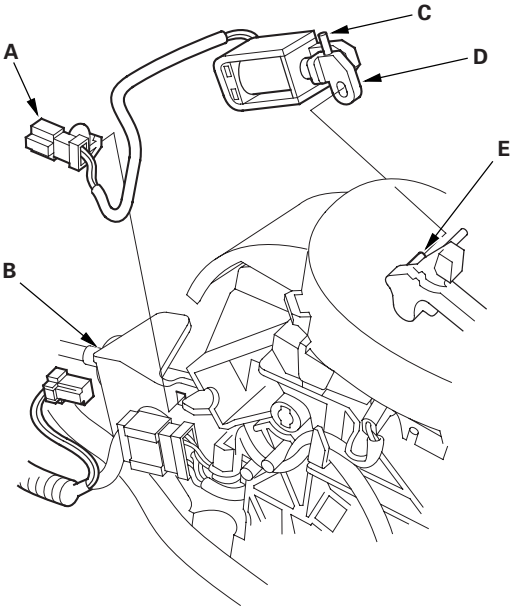

3. Remove the shift lock solenoid with needle-nose pliers.

4. Install the new shift lock solenoid (C) by aligning the joint of the shift lock solenoid plunger (D) with the tip of the shift lock stop (E).

5. Install the shift lock solenoid connector on the shift lever bracket base, then connect the connector.

6. Install the shift lever console panel.

Park Pin Switch Test

1. Remove the shift lever console panel.

2. Disconnect transmission gear selection switch/park pin switch connector.

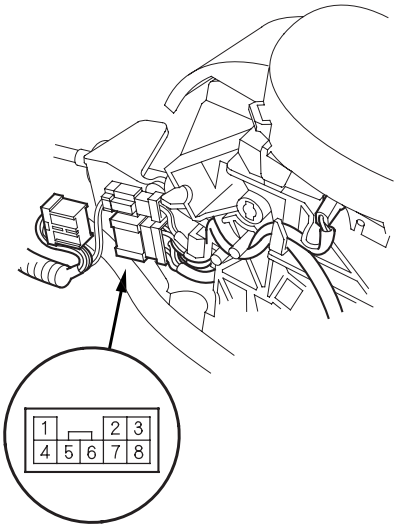

3. Shift to the P position, then check for continuity between connector terminals No. 1 and No. 4. There should be no continuity.

4. Shift out of the P position, and check for continuity between terminals No. 1 and No. 4. There should be continuity.

5. If the park pin switch is faulty, replace it.

Park Pin Switch Replacement

1. Remove the center console (see page 20-59).

2. Disconnect the transmission gear selection switch/ park pin switch connector (A), then remove it from the shift lever bracket base.

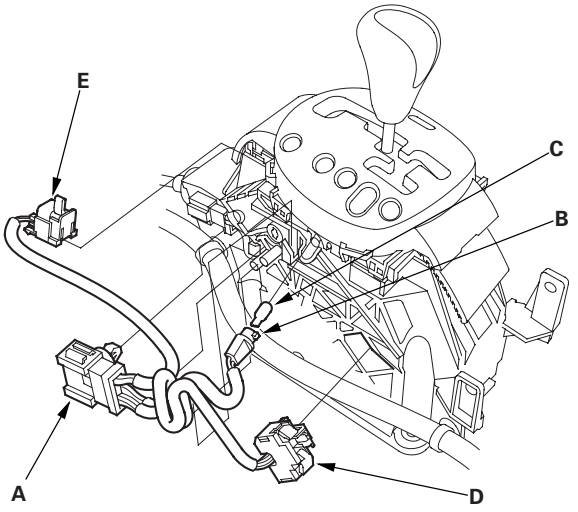

3. Remove the A/T gear position indicator panel light socket (B), then remove the indicator light bulb (C) from the socket.

4. Remove the transmission gear selection switch (D) and park pin switch (E), and install the new switches and connector.

5. Install the A/T gear position indicator panel light bulb in the bulb socket, then install the socket in the A/T gear position indicator panel.

6. Connect the transmission gear selection switch/ park pin switch connector.

7. Install the center console (see page 20-59).

End Cover Removal

Exploded View - 2002 Model: MRMA Transmission Number: 1000001-1002922

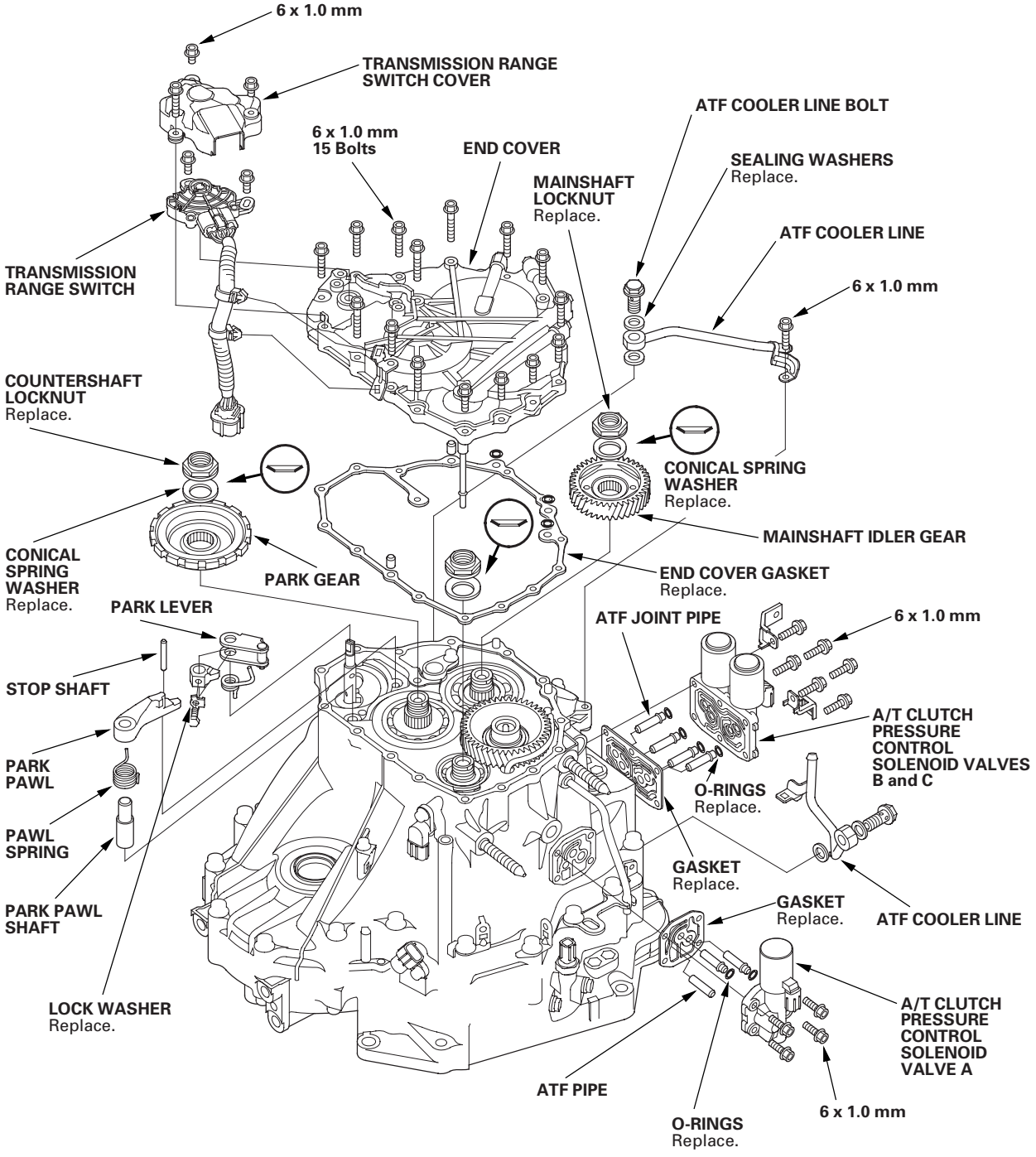

(cont'd)

End Cover Removal (cont'd)

Exploded View - 2002 Model: MRMA Transmission Number: 1002923 or later, and 2003-2006 Models

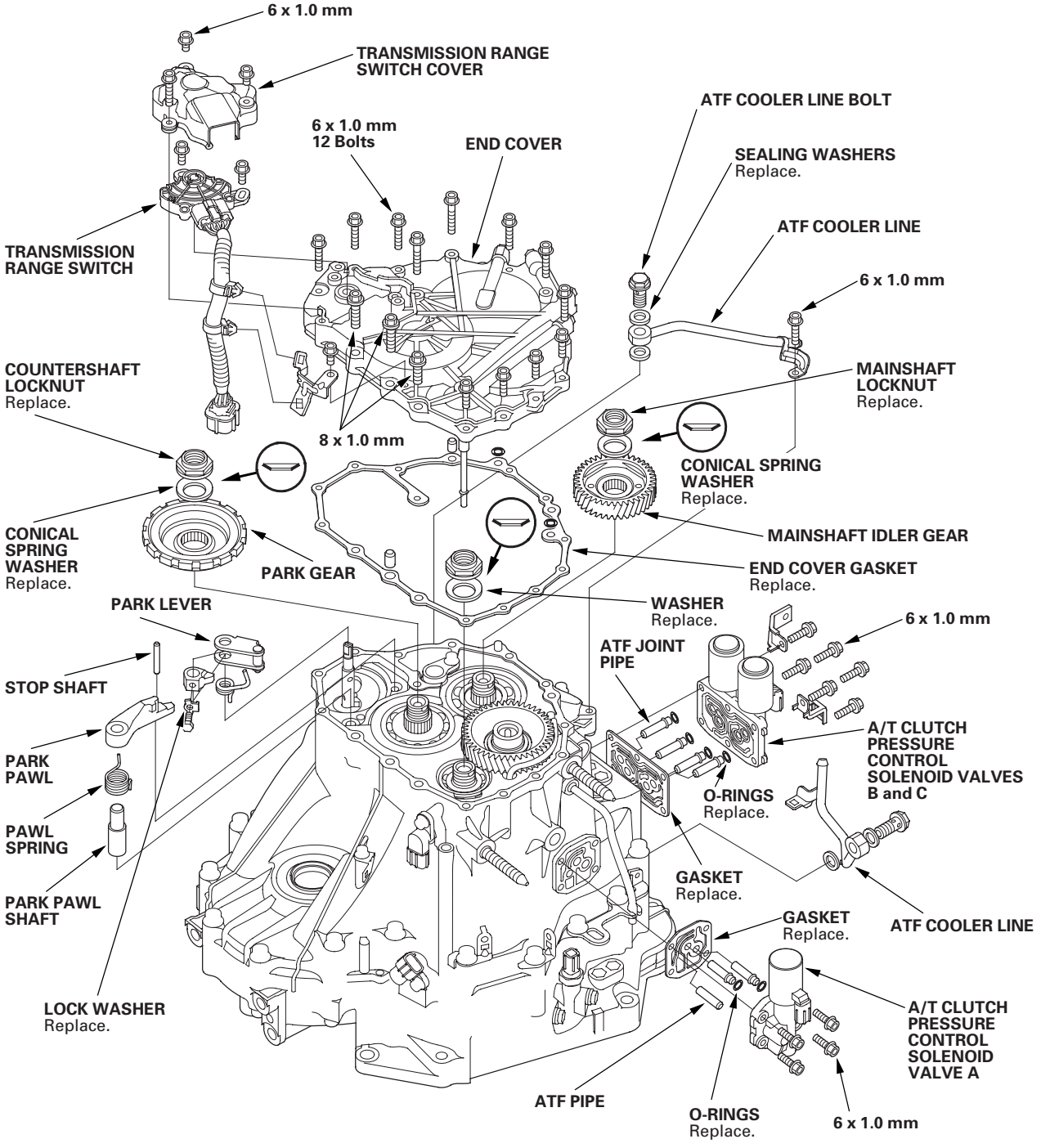

Special Tools Required
Mainshaft holder 07GAB-PF50101 or 07GAB-PF50100

NOTE: Refer to the Exploded View as needed during the following procedure.

1. Remove the ATF cooler lines.

2. Remove the A/T clutch pressure control solenoid valve A, then remove the ATF pipe, ATF joint pipes, and gasket.

3. Remove the A/T clutch pressure control solenoid valves B and C, then remove the ATF joint pipes and gasket.

4. Remove the transmission range switch cover.

5. Remove the transmission range switch harness clamps from the clamp brackets, then remove the transmission range switch.

6. Remove the end cover.

7. Slip the special tool onto the mainshaft.

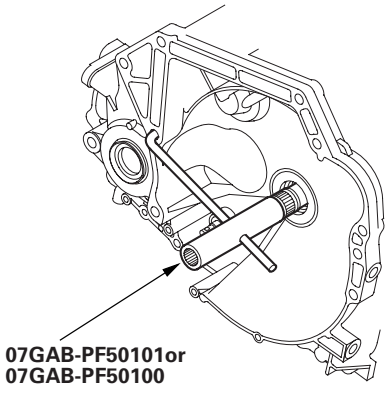

8. Engage the park pawl with the park gear.

9. Cut the lock tab (A) of the each shaft locknut (B) using a chisel (C). Then remove the locknuts and conical spring washers from each shaft.

   NOTE:
   - Countershaft and secondary shaft locknuts have left-hand threads.
   - Keep all of the chiseled particles out of the transmission.
   - Clean the old mainshaft and countershaft locknuts; they are used to install the press fit idler gear onto the mainshaft, and park gear onto the countershaft.

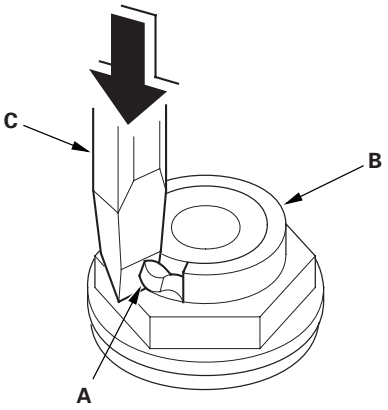

10. Remove the special tool from the mainshaft.

(cont'd)

End Cover Removal (cont'd)

11. Set a two-jaw (or three-jaw) puller (A) on the countershaft (B) by putting a spacer (C) between the puller and countershaft, then remove the park gear (D).

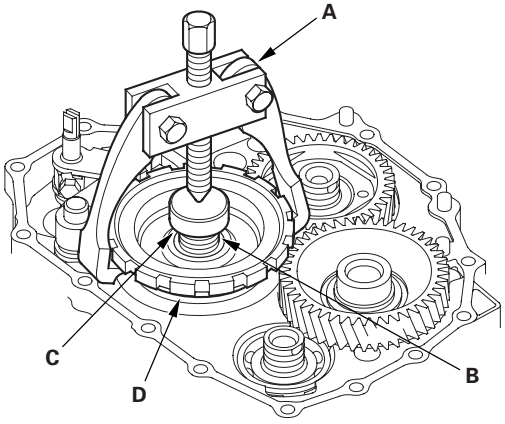

12. Install 6 x 1.0 mm bolts (A) on the mainshaft idler gear (B). Set a puller (C) on the mainshaft (D) with putting a spacer (E) between the puller and mainshaft, then remove the mainshaft idler gear.

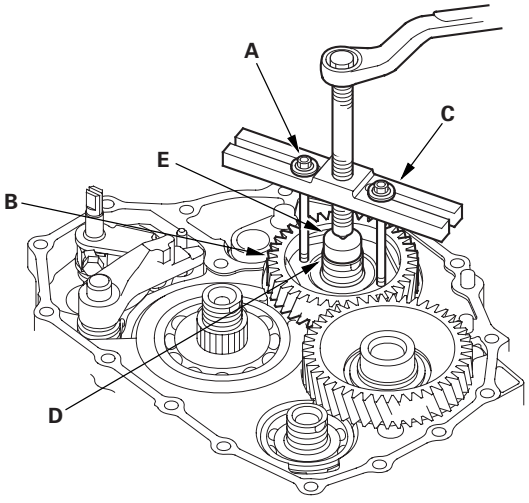

13. Remove the park pawl, park pawl spring, park pawl shaft, and stop shaft.

14. Remove the park lever from the control shaft.

Park Lever Stop Inspection and Adjustment

1. Set the park lever in the P position.

2. Measure the distance (A) between the park pawl shaft (B) and the park lever roller pin (C).

   Standard: 57.7—58.7 mm (2.27—2.31 in.)

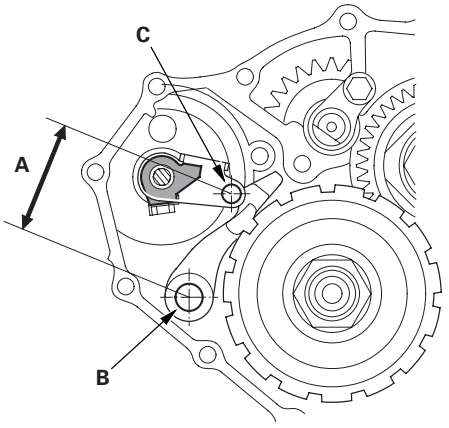

3. If the measurement is out of standard, select and install the appropriate park lever stop (A) from the table.

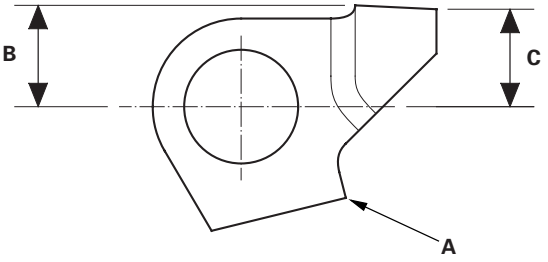

PARK LEVER STOP

Mark	Part Number	B	C
1	24537-PA9-003	11.00 mm (0.433 in.)	11.00 mm (0.433 in.)
2	24538-PA9-003	10.80 mm (0.425 in.)	10.65 mm (0.419 in.)
3	24539-PA9-003	10.60 mm (0.417 in.)	10.30 mm (0.406 in.)

4. After replacing the park lever stop, make sure the distance is within tolerance.

Idler Gear Shaft Bearing Replacement

Special Tools Required
- Adjustable bearing puller, 25—40 mm 07736-A01000B or 07736-A01000A
- Driver 07749-0010000
- Attachment, 52 x 55 mm 07746-0010400

1. Remove the idler gear shaft bearing (A) from the end cover (B) with the special tool and a commercially available 3/8 ′′-16 slide hammer (C).

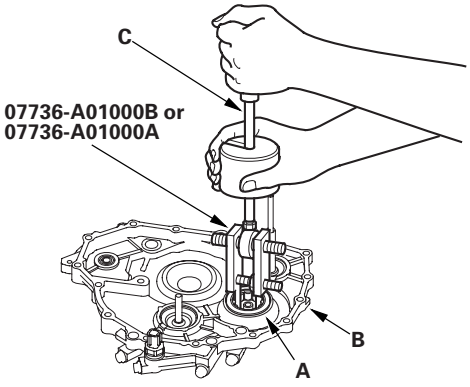

2. Install the new bearing in the end cover with the special tools.

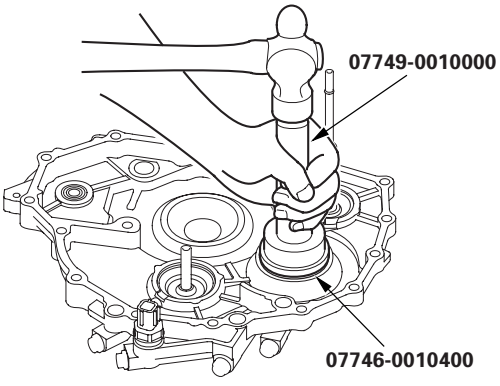

Selector Control Shaft Oil Seal Replacement

Special Tools Required
- Driver 07749-0010000
- Attachment, 22 x 24 mm 07746-0010800

1. Remove the oil seal (A) from the end cover (B).

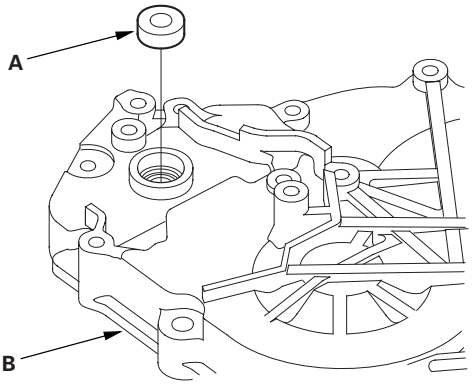

2. Install the new oil seal flush to the end cover with the special tools.

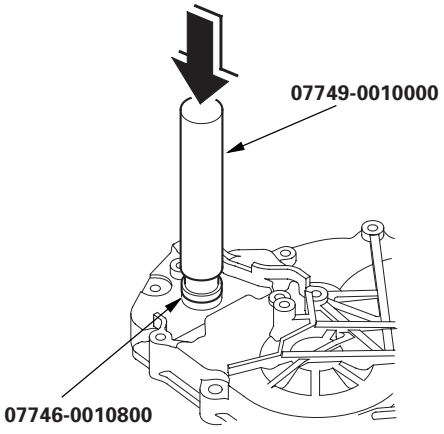

Selector Control Shaft Bearing Replacement

Special Tools Required
- Driver 07749-0010000
- Attachment, 22 x 24 mm 07746-0010800

1. Remove the oil seal from the end cover, then remove the bearing.

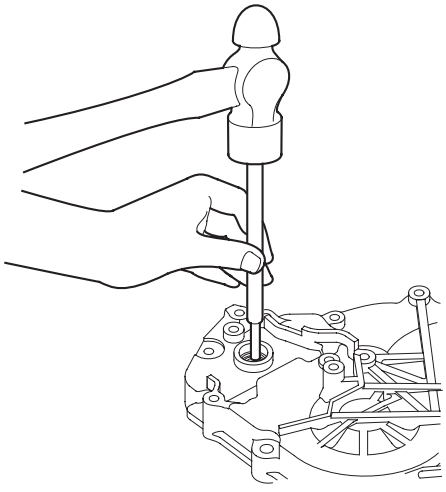

2. Install the new bearing flush to the end cover with the special tools.

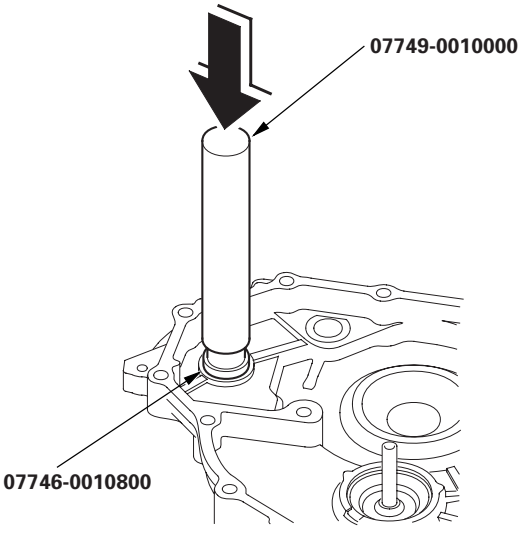

3. Install the new oil seal (see page 14-335).

ATF Feed Pipe Replacement

1. Remove the snap rings (A), ATF feed pipes (B), and feed pipe flanges (C) from the end cover (D).

   NOTE: Replace the end cover, if the 1st clutch ATF feed pipe (E) replacement is required.

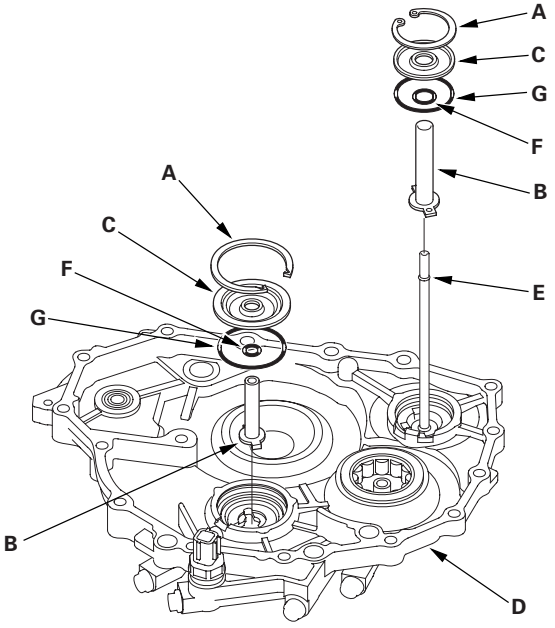

2. Install the new O-rings (F) over the ATF feed pipes.

3. Install the ATF feed pipes in the end cover by aligning the feed pipe tabs with the indentations in the end cover.

4. Install the new O-rings (G) in the end cover, then install the feed pipe flanges over the ATF feed pipes.

5. Secure the ATF feed pipes and feed pipe flanges with the snap rings.

Housing and Shaft Assembly Removal

Exploded View

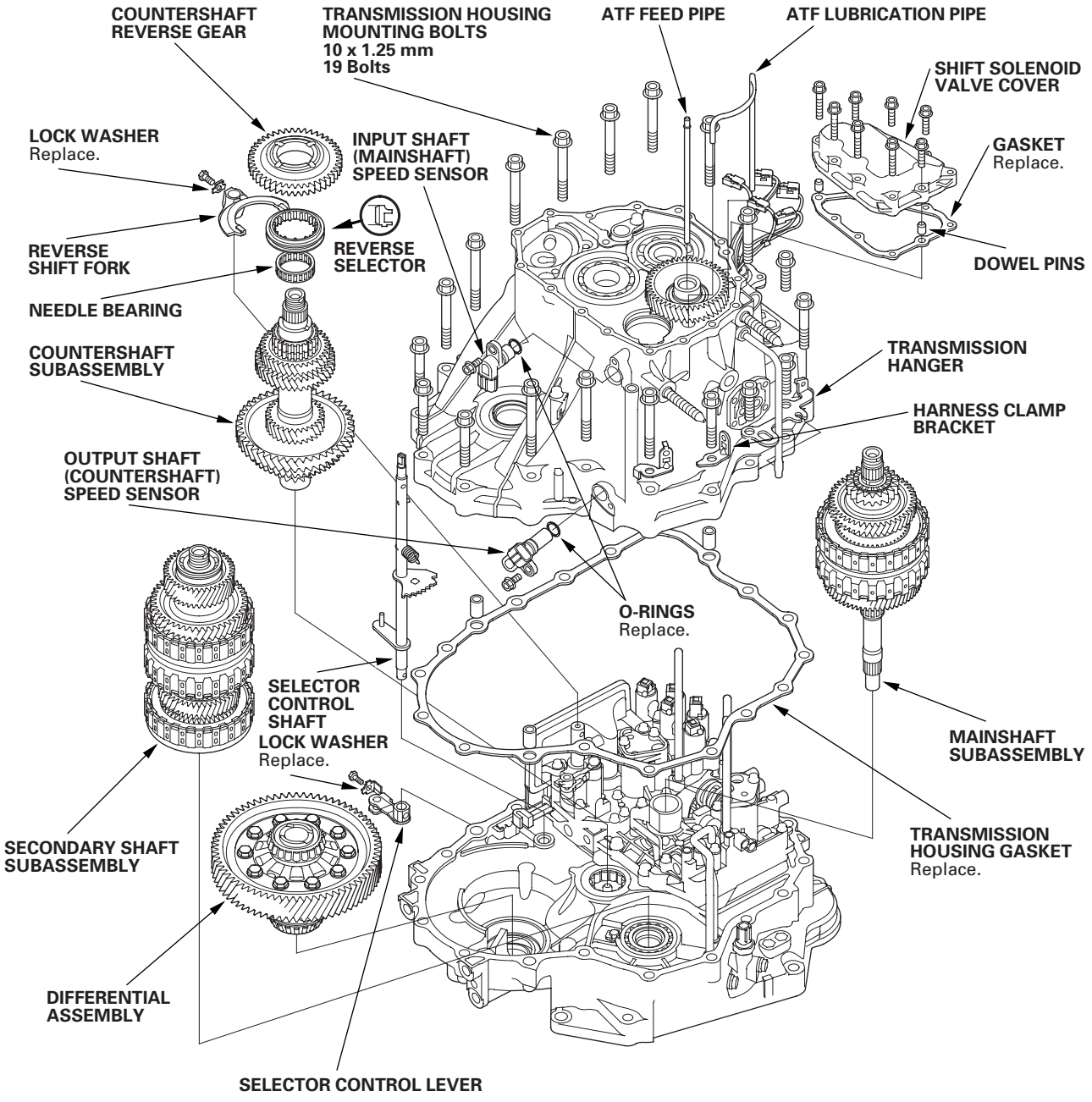

(cont'd)

Housing and Shaft Assembly Removal (cont'd)

Special Tools Required
Housing puller 07HAC-PK40102

NOTE: Refer to the Exploded View as needed during the following procedure.

1. Remove the ATF pipe from the idler gear shaft, and the ATF lubrication pipe from the transmission housing.

2. Remove the shift solenoid valve cover (A), dowel pins (B), and gasket (C).

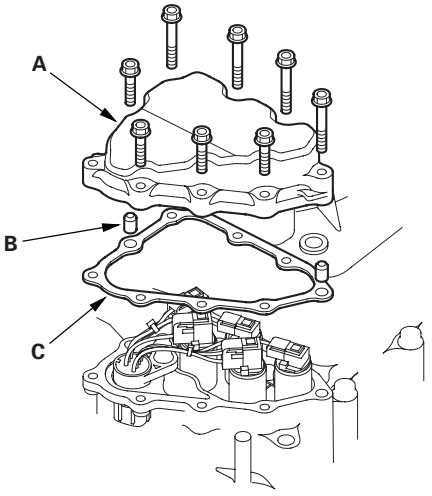

3. Remove the bolt (A) securing the solenoid harness connector (B), and remove the connector.

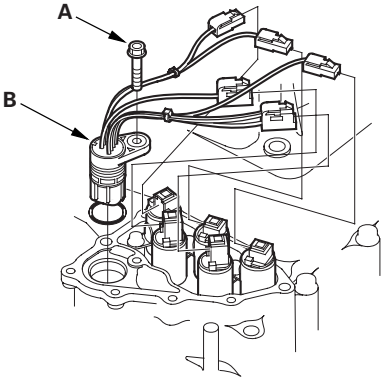

4. Disconnect the connectors from the shift solenoid valves.

5. Remove the input shaft (mainshaft) and output shaft (countershaft) speed sensors.

6. Remove the transmission housing mounting bolts, hanger, and harness clamp brackets.

7. Align the spring pin (A) on the selector control shaft (B) with the transmission housing groove (C) by turning the control shaft when turning the shaft.

   NOTE: Do not squeeze the end of the control shaft tips together when turning the shaft.

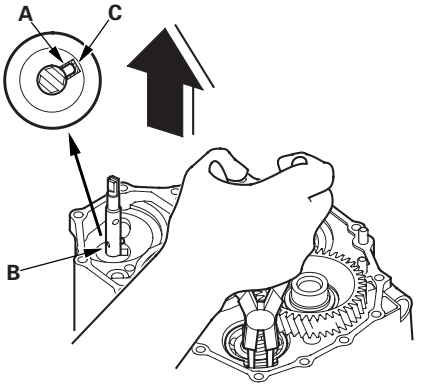

8. While expanding the snap ring of the secondary shaft bearing using the snap ring pliers, lift the transmission housing. Release the snap ring pliers, and remove the transmission housing.

9. Remove the countershaft reverse gear and needle bearing.

10. Remove the lock bolt securing the shift fork, then remove the shift fork with the reverse selector together.

11. Remove the selector control lever from the selector control shaft.

12. Unhook the detent spring (A) from the detent arm (B).

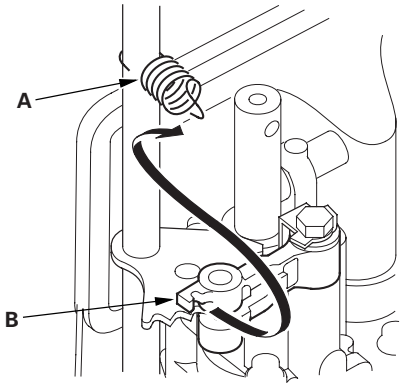

13. Remove the selector control shaft (A) from the torque converter housing.

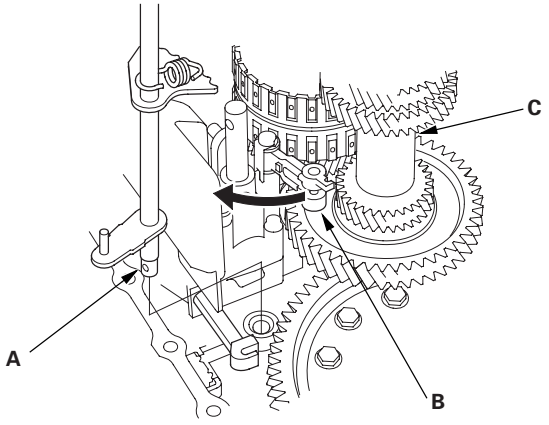

14. Turn the detent arm (B) away from the countershaft (C).

15. Remove the mainshaft subassembly (A), countershaft subassembly (B), and secondary shaft subassembly (C) together.

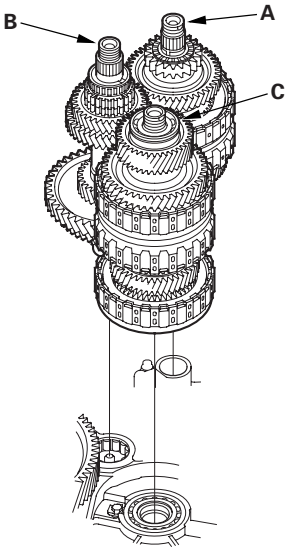

16. Remove the differential assembly.

Bearing Removal

Special Tools Required
- Attachment, 78 x 90 mm 07GAD-SD40101
- Driver 07749-0010000
- Attachment, 42 x 47 mm 07746-0010300

1. Remove the idler gear shaft when removing the mainshaft bearing and idler gear shaft bearing.

   NOTE: If you are only removing the countershaft bearing, idler gear shaft removal is not needed.

2. To remove the mainshaft bearing (A) and countershaft bearing (B) from the transmission housing, expand each snap ring with the snap ring pliers, then push the bearing out.

   NOTE: Do not remove the snap ring unless it's necessary to clean the grooves in the housing.

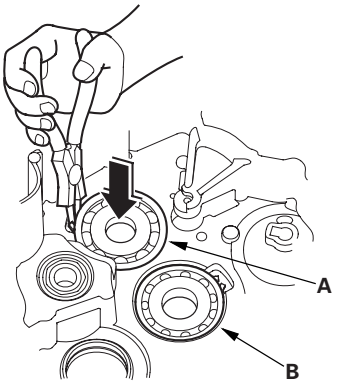

3. Expand the snap ring of the idler gear shaft bearing with the snap ring pliers, then push the bearing out.

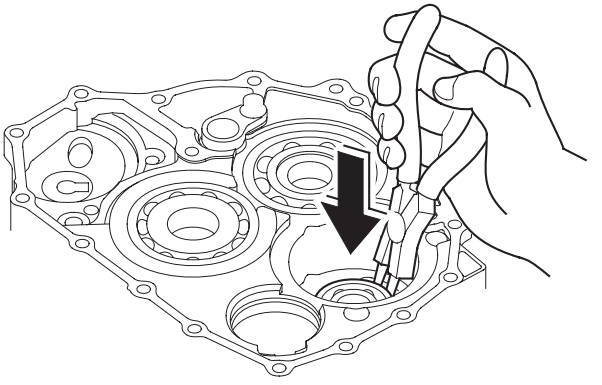

Bearing Installation

Special Tools Required
- Attachment, 78 x 90 mm 07GAD-SD40101
- Driver 07749-0010000
- Attachment, 42 x 47 mm 07746-0010300

1. Install the bearings in the direction shown.

2. Expand each snap ring with the snap ring pliers, and install the mainshaft bearing (A) and countershaft bearing (B) part-way into the housing.

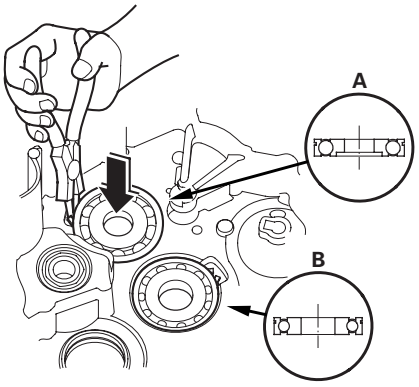

3. Release the pliers, then push the bearing down into the housing until the snap ring snaps in place around it.

4. Expand the snap ring of the idler gear shaft (A) with the snap ring pliers, and install the bearing part-way into the housing.

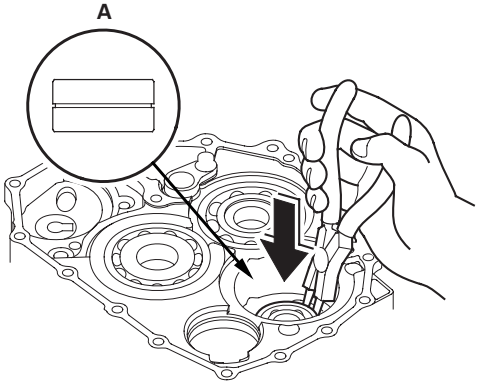

5. Release the pliers, then push the bearing down into the housing until the snap ring snaps in place around it.

6. After installing the bearings verify that the snap rings (A) are seated in the bearing and housing grooves, and that the ring end gaps (B) are correct.

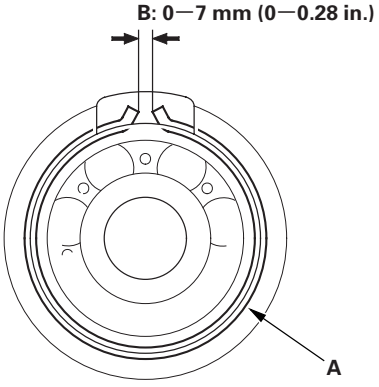

7. Install the idler shaft.

Reverse Idler Gear Removal and Installation

Removal

1. Remove the bolt (A) securing the reverse idler gear shaft holder.

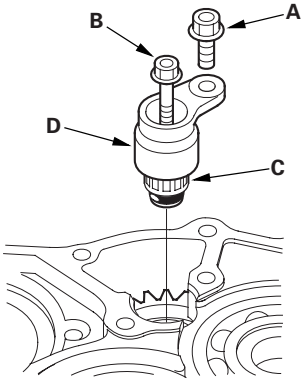

2. Install a 5 x 0.8 mm bolt (B) in the reverse idler gear shaft, and pull it to remove the reverse idler gear shaft (C) and gear shaft holder (D) together.

3. Remove the reverse idler gear.

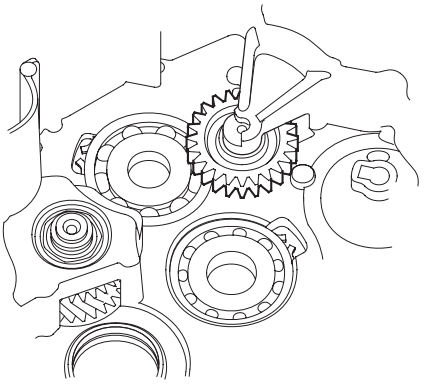

Installation

1. Install the reverse idler gear in the transmission housing.

2. Lightly coat the reverse idler gear shaft (A), needle bearing (B), and new O-rings (C) with lithium grease.

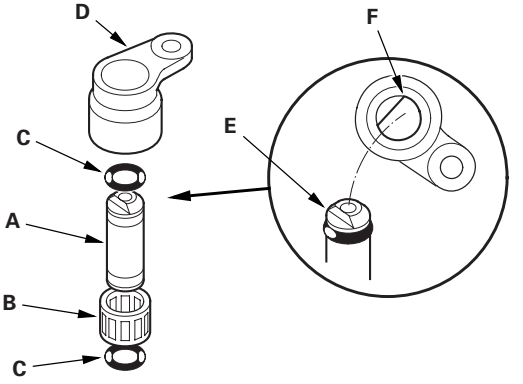

3. Assemble the new O-rings and needle bearing on the reverse idler gear shaft, then install the reverse idler gear shaft in the reverse idler gear shaft holder (D). Align the D-shaped cut out (E) of the shaft with the D-shaped area (F) of the holder.

4. Install the reverse idler gear shaft/holder assembly on the transmission housing.

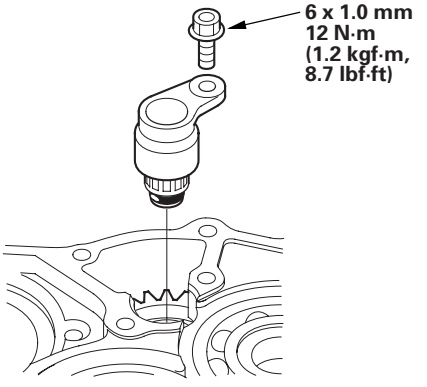

Valve Body and ATF Strainer Removal

Exploded View

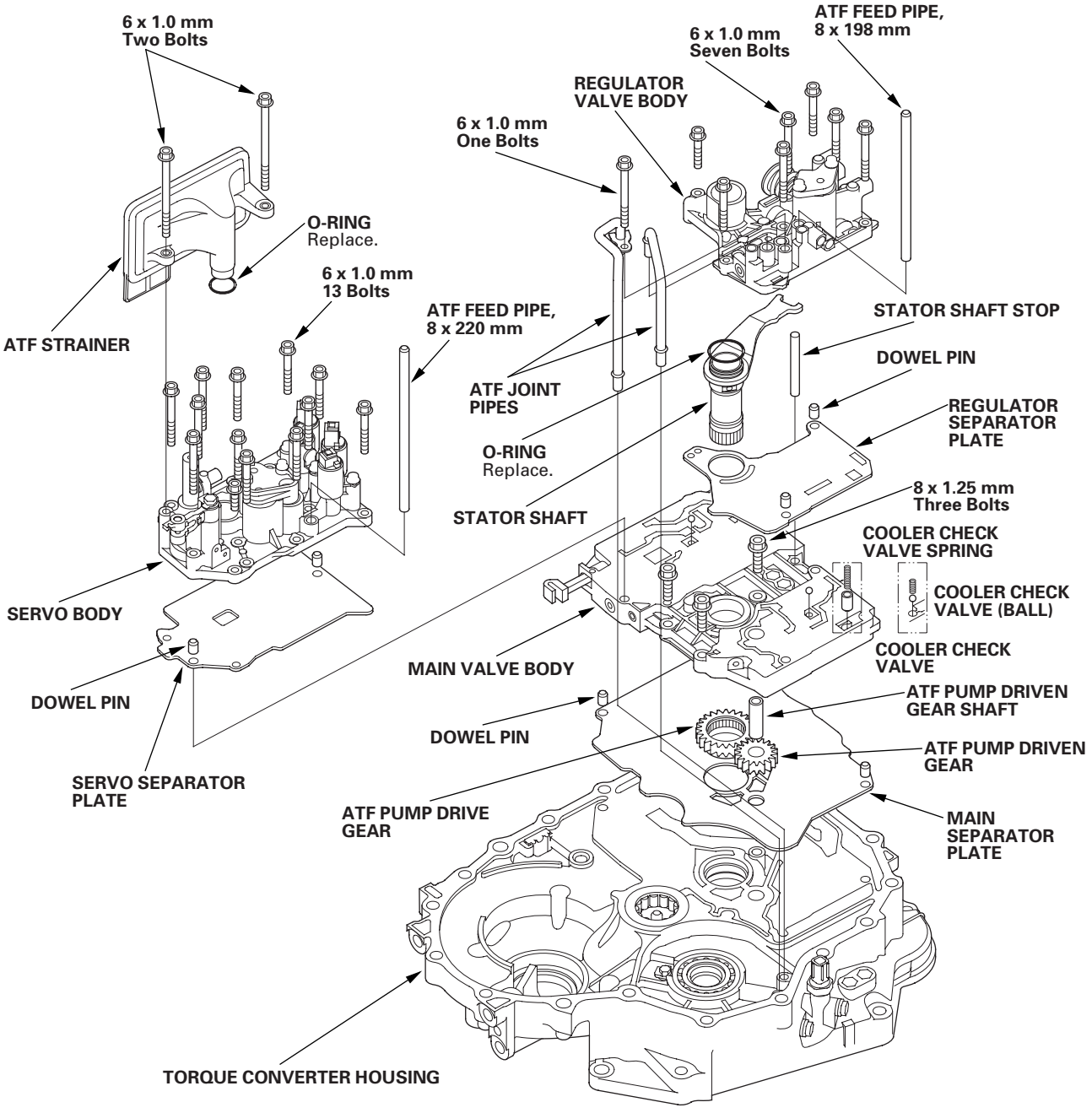

(cont'd)

Valve Body and ATF Strainer Removal (cont'd)

NOTE: Refer to the Exploded View as needed during the following procedure.

1. Remove the ATF feed pipes from the regulator valve body, and servo body.
2. Remove the ATF strainer (two bolts).
3. Remove the servo body (13 bolts), then remove the separator plate and dowel pins (two).
4. Remove the ATF joint pipes (one bolt) from the regulator valve body.
5. Remove the regulator valve body (seven bolts).
6. Remove the stator shaft and stator shaft stop.
7. Remove the regulator separator plate and dowel pins (two).
8. Remove the cooler check valve spring:
   - 2002 model (transmission number 1000001-1006166): Remove the cooler check valve spring from the main valve body, then remove the main valve body (three bolts). Do not let the check balls and cooler check valve (ball) fall out.
   - 2002 model (transmission number 1006167 or later), and 2003-2006 models: Remove the cooler check valve spring and cooler check valve from the main valve body, then remove the main valve body (three bolts). Do not let the check balls fall out.
9. Remove the ATF pump driven gear shaft, then remove the ATF pump gears.
10. Remove the main separator plate and dowel pins (two).
11. Clean the inlet opening (A) of the ATF strainer (B) thoroughly with compressed air, then check that it is in good condition and that the inlet opening is not clogged.

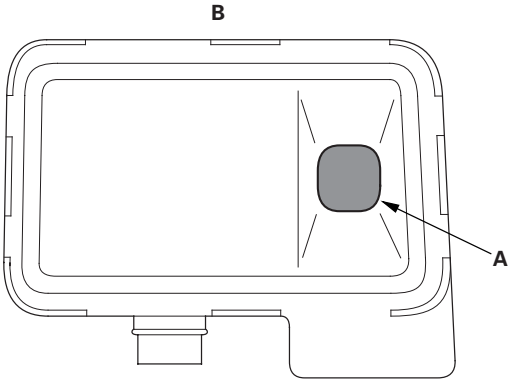

12. Test the ATF strainer by pouring clean ATF through the inlet opening, and replace it if it is clogged or damaged.
13. Remove the O-rings from the stator shaft and ATF strainer. Install a new O-rings when installing the valve bodies.

Valve Body Repair

NOTE: This repair is only necessary if one or more of the valves in a valve body do not slide smoothly in their bores. Use this procedure to free the valves.

1. Soak a sheet of #600 abrasive paper in ATF for about 30 minutes.

2. Carefully tap the valve body so the sticking valve drops out of its bore. It may be necessary to use a small screwdriver to pry the valve free. Be careful not to scratch the bore with the screwdriver.

3. Inspect the valve for any scuff marks. Use the ATF-soaked #600 paper to polish off any burrs that are on the valve, then wash the valve in solvent and dry it with compressed air.

4. Roll up half a sheet of ATF-soaked #600 paper and insert it in the valve bore of the sticking valve. Twist the paper slightly, so that it unrolls and fits the bore tightly, then polish the bore by twisting the paper as you push it in and out.

   NOTE: The valve body is aluminum and doesn't require much polishing to remove any burrs.

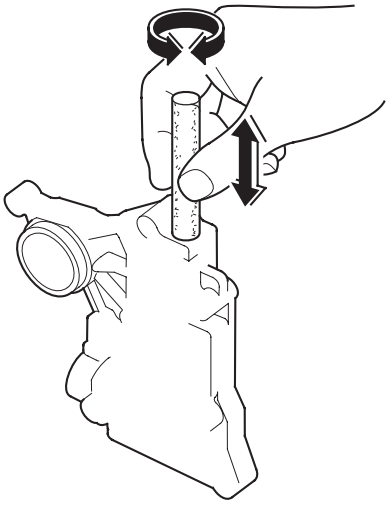

5. Remove the #600 paper. Thoroughly wash the entire valve body in solvent, then dry it with compressed air.

6. Coat the valve with ATF, then drop it into its bore. It should drop to the bottom of the bore under its own weight. If not, repeat step 4, then retest. If the valve still sticks, replace the valve body.

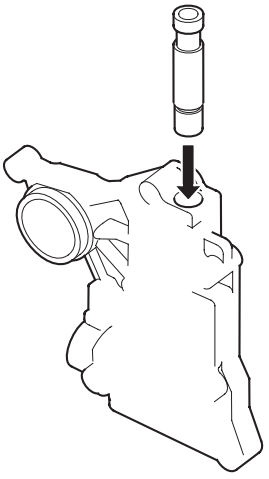

7. Remove the valve, and thoroughly clean it and the valve body with solvent. Dry all parts with compressed air, then reassemble using ATF as a lubricant.

Valve Body Valve Installation

1. Coat all parts with ATF before assembly.

2. Install the valves and springs in the sequence shown for the main valve body (see page 14-347), regulator valve body (see page 14-349), and servo body (see page 14-350). Refer to the following valve cap illustrations, and install each valve cap so the end shown facing up will be facing the outside of the valve body.

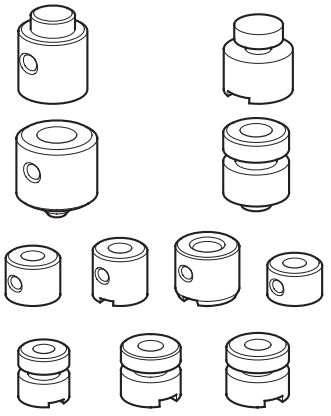

3. Install all the springs and seats. Insert the spring (A) in the valve, then install the valve in the valve body (B). Push the spring in with a screwdriver, then install the spring seat (C).

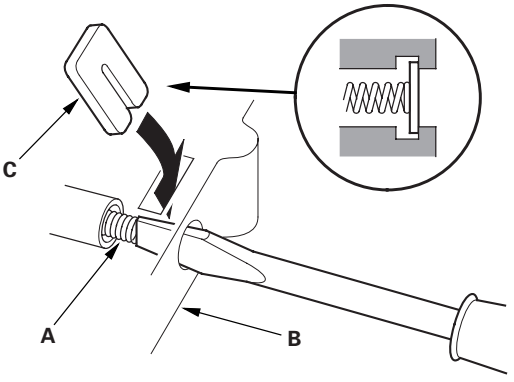

Main Valve Body Disassembly, Inspection, and Reassembly

1. Clean all parts thoroughly in solvent or carburetor cleaner, and dry them with compressed air. Blow out all passages.

2. Do not use a magnet to remove the check balls, it may magnetize the balls.

3. Inspect the valve body for scoring and damage.

4. Check all valves for free movement. If any fail to slide freely, refer to valve body repair (see page 14-345).

5. Coat all parts with ATF during assembly.

   NOTE:
   - Cooler check valve (ball) and spring (G) apply to 2002 model; transmission number 100000-1006166.
   - Cooler check valve and spring (F) apply to 2002 model; transmission number 1006167 or later, and 2003-2006 models.

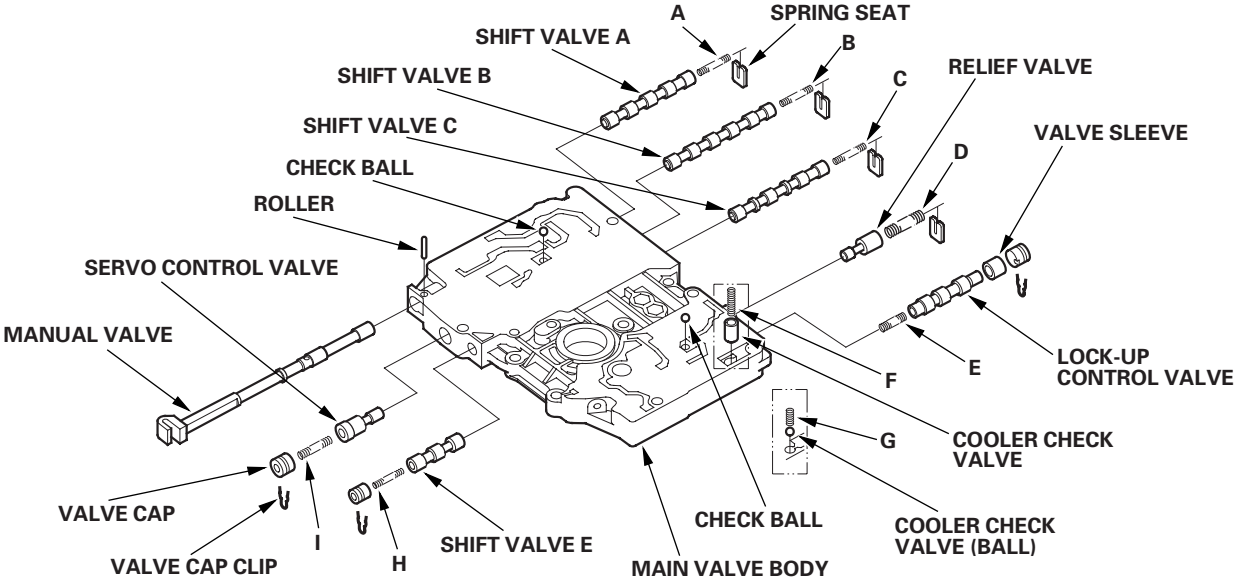

SPRING SPECIFICATIONS

Springs		Standard (New)-Unit: mm (in.)			
		Wire Diameter	O.D.	Free Length	No. of Coils
A	Shift valve A spring	0.8 (0.031)	5.6 (0.220)	28.1 (1.106)	15.9
B	Shift valve B spring	0.8 (0.031)	5.6 (0.220)	28.1 (1.106)	15.9
C	Shift valve C spring	0.8 (0.031)	5.6 (0.220)	28.1 (1.106)	15.9
D	Relief valve spring	1.0 (0.039)	9.6 (0.378)	34.1 (1.343)	10.2
E	Lock-up control valve spring	0.65 (0.026)	7.1 (0.280)	23.1 (0.909)	12.7
F	Cooler check valve spring	0.85 (0.033)	6.6 (0.260)	27.0 (1.063)	11.3
G	Cooler check valve (ball) spring	0.55 (0.022)	5.8 (0.228)	19.0 (0.748)	9.6
H	Shift valve E spring	0.8 (0.031)	5.6 (0.220)	28.1 (1.106)	15.9
I	Servo control valve spring	0.7 (0.028)	6.6 (0.260)	35.7 (1.406)	17.2

ATF Pump Inspection

1. Install the ATF pump drive gear (A), driven gear (B), and ATF pump driven gear shaft (C) in the main valve body (D). Lubricate all parts with ATF, and install the ATF pump driven gear with its grooved and chamfered side facing up.

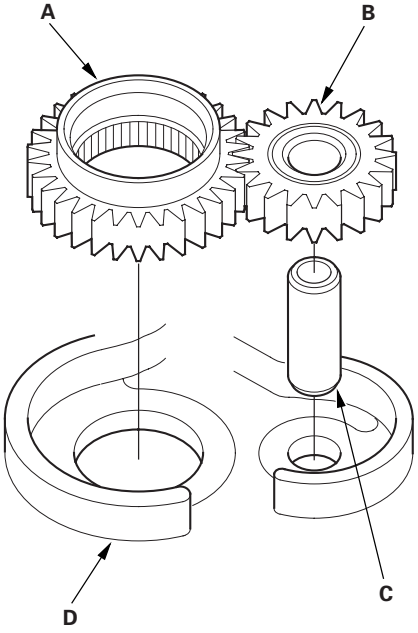

2. Measure the side clearance of the ATF pump drive gear (A) and driven gear (B).

   ATF Pump Gears Side (Radial) Clearance
   Standard (New):
   ATF Pump Drive Gear:
   0.210—0.265 mm (0.0083—0.0104 in.)
   ATF Pump Driven Gear:
   0.070—0.125 mm (0.0028—0.0049 in.)

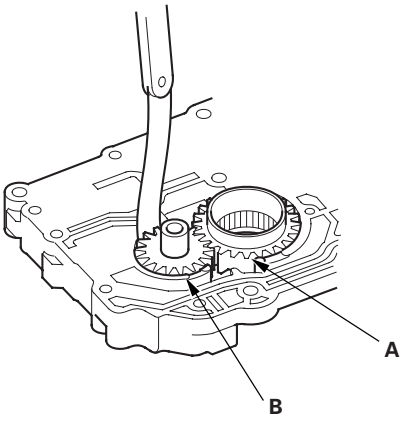

3. Remove the ATF pump driven gear shaft. Measure the thrust clearance between the ATF pump driven gear (A) and the valve body (B) with a straight edge (C) and a feeler gauge (D).

   ATF Pump Drive/Driven Gear Thrust (Axial) Clearance
   Standard (New): 0.03—0.06 mm (0.001—0.002 in.)
   Service Limit: 0.07 mm (0.003 in.)

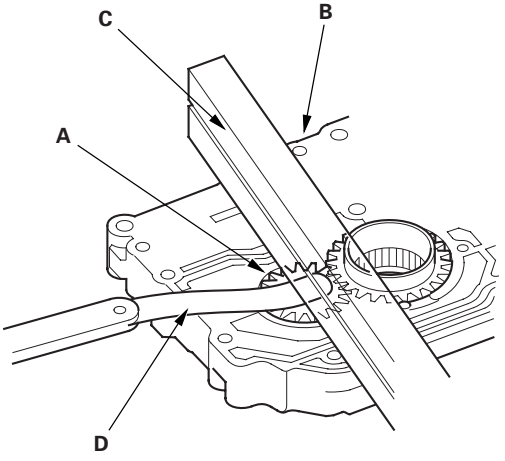

Regulator Valve Body Disassembly, Inspection, and Reassembly

1. Clean all parts thoroughly in solvent or carburetor cleaner, and dry them with compressed air. Blow out all passages.

2. Check all valves for free movement. If any fail to slide freely, refer to valve body repair (see page 14-345).

3. Hold the regulator spring cap in place while removing the stop bolt. The regulator spring cap is spring loaded. Once the stop bolt is removed, release the spring cap slowly so it does not pop out.

4. Coat all parts with ATF during assembly.

5. When reassembling the valve body, align the hole in the regulator spring cap with the hole in the valve body, then press the spring cap into the valve body, and tighten the stop bolt.

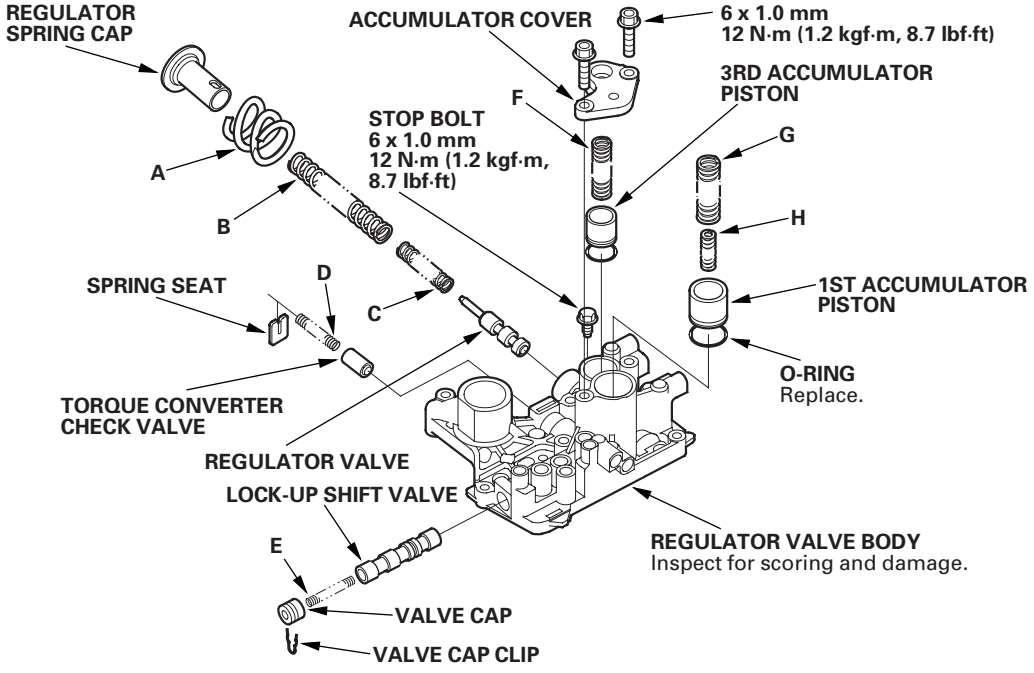

SPRING SPECIFICATIONS

Spring		Standard (New)-Unit: mm (in.)			
		Wire Diameter	O.D.	Free Length	No. of Coils
A	Stator reaction spring	4.5 (0.177)	35.4 (1.394)	30.3 (1.193)	1.92
B	Regulator valve spring A	1.9 (0.075)	14.7 (0.579)	80.6 (3.173)	16.1
C	Regulator valve spring B	1.6 (0.063)	9.2 (0.362)	44.0 (1.732)	12.5
D	Torque converter check valve spring	1.2 (0.047)	8.6 (0.339)	33.8 (1.331)	12.2
E	Lock-up shift valve spring	1.0 (0.039)	6.6 (0.260)	35.5 (1.398)	18.2
F	3rd accumulator spring	2.5 (0.098)	14.6 (0.575)	29.9 (1.177)	4.9
G	1st accumulator spring A	2.4 (0.094)	18.6 (0.732)	49.0 (1.929)	7.1
H	1st accumulator spring B	2.3 (0.091)	12.2 (0.480)	31.5 (1.240)	6.6

Servo Body Disassembly, Inspection, and Reassembly

1. Clean all parts thoroughly in solvent or carburetor cleaner, and dry them with compressed air. Blow out all passages.
2. Inspect the valve body for scoring and damage.
3. Check shift valve D for free movement. If any fail to slide freely, refer to valve body repair (see page 14-345).
4. Do not hold the shift solenoid valve connector to remove and install it. Be sure to hold the shift solenoid valve body. When installing the shift solenoid valves, refer to Shift Solenoid Valves Installation (see page 14-351).
5. Coat all parts with ATF during assembly.
6. Replace the O-rings with new ones.

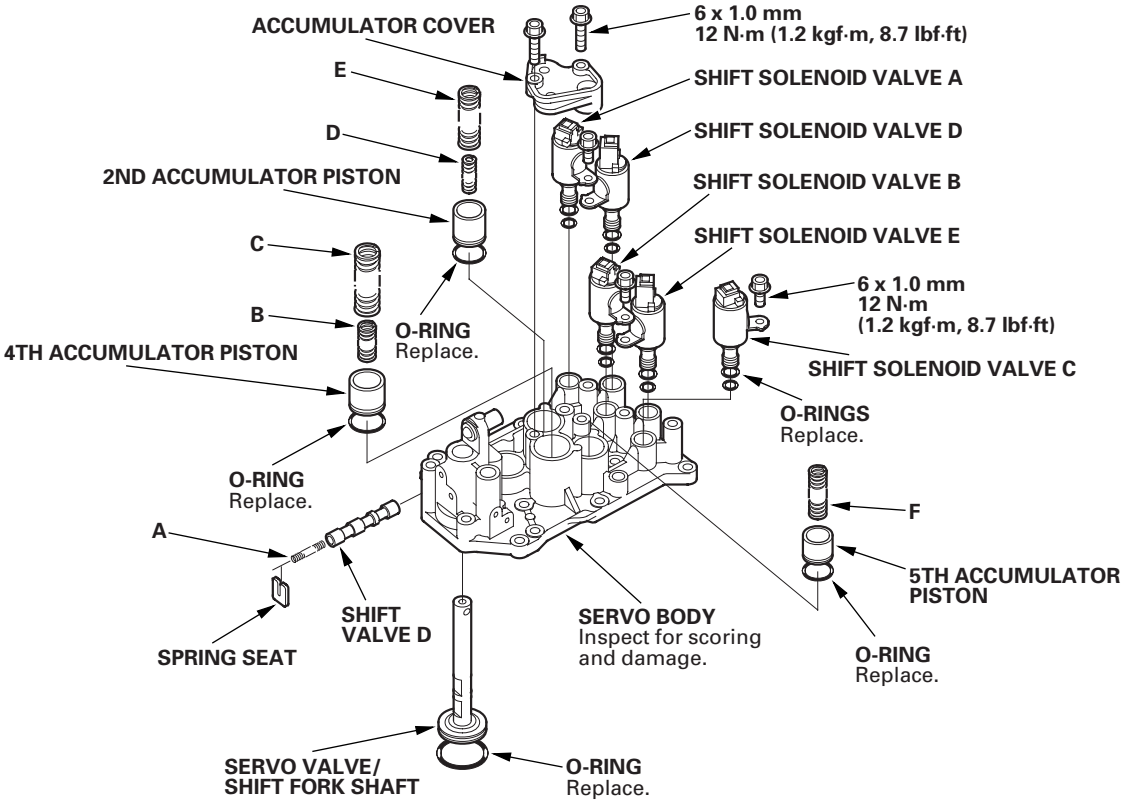

SPRING SPECIFICATIONS

Springs		Standard (New)-Unit: mm (in.)			
		Wire Diameter	O.D.	Free Length	No. of Coils
A	Shift valve D spring	0.8 (0.031)	5.6 (0.220)	28.1 (1.106)	15.9
B	4th accumulator spring B	2.3 (0.091)	12.2 (0.480)	31.5 (1.240)	6.6
C	4th accumulator spring A	2.4 (0.094)	18.6 (0.732)	49.0 (1.929)	7.1
D	2nd accumulator spring B	2.0 (0.079)	10.6 (0.417)	34.0 (1.339)	8.0
E	2nd accumulator spring A	2.2 (0.087)	16.6 (0.654)	48.2 (1.898)	8.5
F	5th accumulator spring	2.5 (0.098)	14.6 (0.575)	29.9 (1.177)	4.9

Shift Solenoid Valve Installation

NOTE:
- Do not install shift solenoid valve A and B before installing shift solenoid valve D and E. If solenoid valve A and B are installed before solenoid valves D and E, it may damage the hydraulic control system.
- Do not hold the shift solenoid valve connector to install it. Hold the shift solenoid valve body.

1. Install the new O-rings (F) on each shift solenoid valves.

   NOTE: The new shift solenoid valve is equipped with new O-ring. If you install a new shift solenoid valve, there is no need to replace its O-rings.

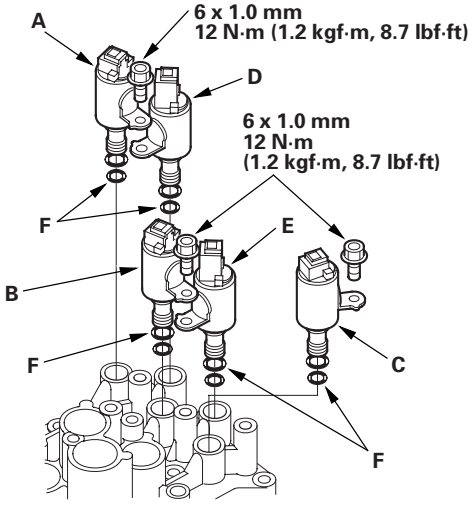

2. Install shift solenoid valve D by holding the shift solenoid valve body; be sure to install the mounting bracket contacts the servo body.

3. Install shift solenoid valve A by holding the shift solenoid valve body; be sure to install the mounting bracket contacts the bracket on shift solenoid valve D.

4. Install shift solenoid valve E by holding the shift solenoid valve body; be sure to install the mounting bracket contacts the servo body.

5. Install shift solenoid valve B by holding the shift solenoid valve body; be sure to install the mounting bracket contacts the bracket on shift solenoid valve E.

6. Install shift solenoid valve C by holding the shift solenoid valve body; be sure to install the mounting bracket contacts the servo body.

Mainshaft Bearing and Oil Seal Replacement

Special Tools Required
- Adjustable bearing puller, 25—40 mm 07736-A01000B or 07736-A01000A
- Driver 07749-0010000
- Attachment, 62 x 68 mm 07746-0010500
- Attachment, 72 x 75 mm 07746-0010600

1. Remove the mainshaft bearing and oil seal with the special tool and a commercially available 3/8 ''-16 slide hammer (A).

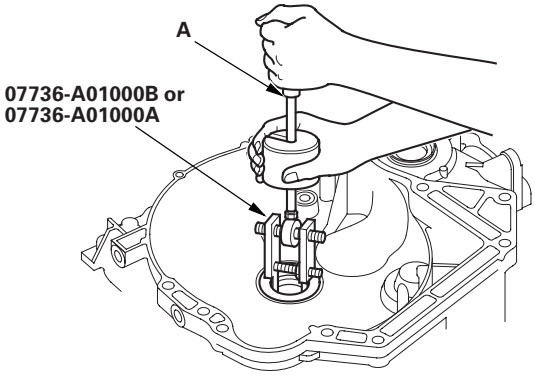

2. Install the new mainshaft bearing until it bottoms in the torque converter housing with the special tools.

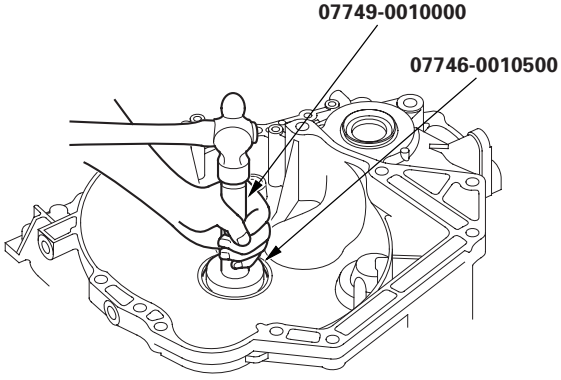

3. Install the new oil seal flush with the housing with the special tools.

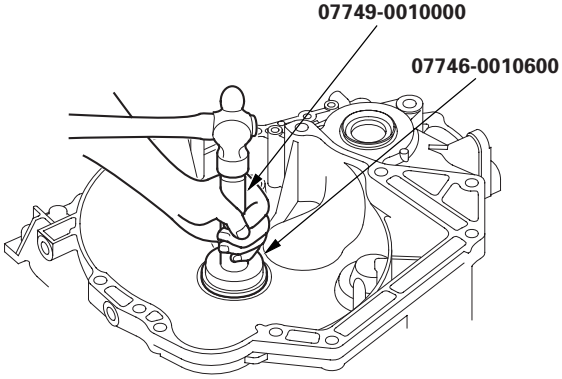

Countershaft Bearing Replacement

Special Tools Required
- Adjustable bearing puller, 25—40 mm 07736-A01000B or 07736-A01000A
- Driver 07749-0010000
- Attachment, 62 x 68 mm 07746-0010500

1. Remove the countershaft bearing with the special tool and a commercially available 3/8 ''-16 slide hammer (A).

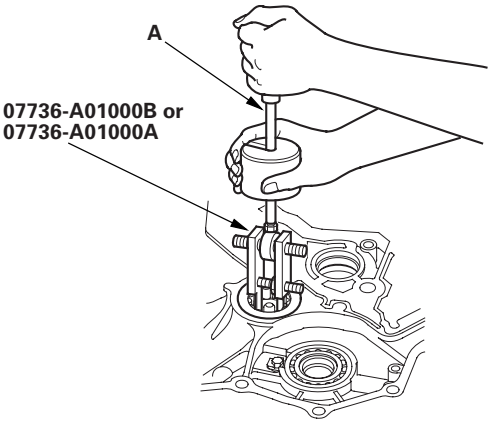

2. Install the ATF guide plate (A).

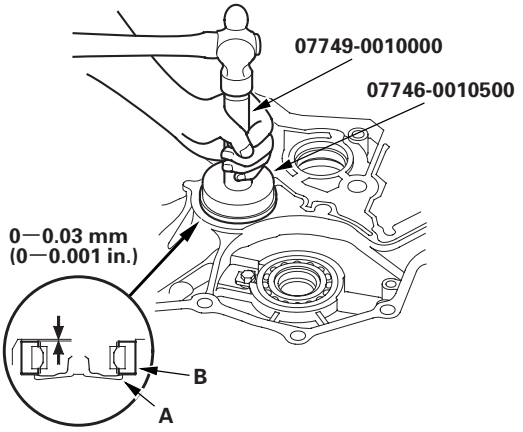

3. Install the new countershaft bearing (B) in the housing with the special tools.

Secondary Shaft Bearing Replacement

Special Tools Required
- Driver 07749-0010000
- Attachment, 62 x 68 mm 07746-0010500

1. Remove the bolt, then remove the lock washer (A) and bearing set plate (B).

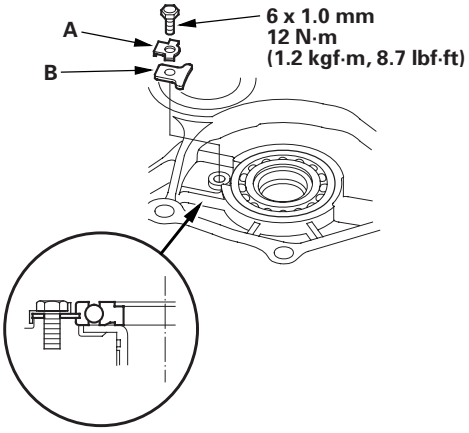

2. Remove the secondary shaft bearing (A) by heating the housing to about 212 °F (100 °C) with a heat gun (B). Do not heat the housing in excess of 212 °F (100 °C).

   NOTE: Let the housing cool to normal temperature before installing the bearing.

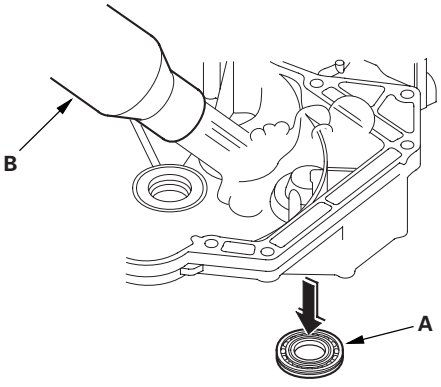

3. Install the new O-rings (A) on the ATF guide collar (B), then install the ATF guide collar in the housing.

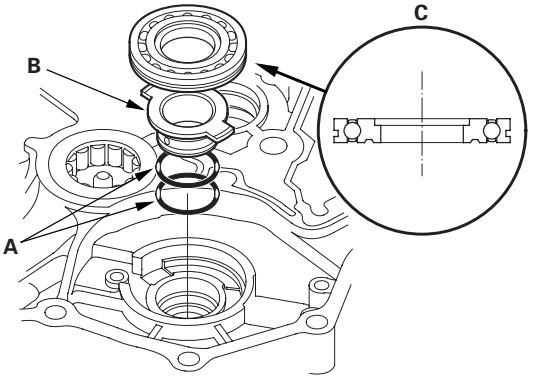

4. Install the new secondary shaft bearing (C) in the direction shown.

5. Drive the secondary shaft bearing with the special tools, and install it securely in the housing.

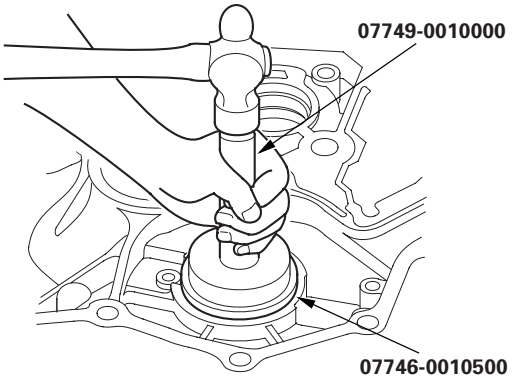

6. Check that the bearing groove aligns with the housing surface, then install the bearing set plate with aligning the bearing groove.

7. Install the new lock washer and bolt, then bend the lock tab of the lock washer against the bolt head.

Selector Control Shaft Oil Seal Replacement

Special Tools Required
- Driver 07749-0010000
- Oil seal driver attachment 07947-ZV00100

1. Remove the oil seal (A) from the torque converter housing (B).

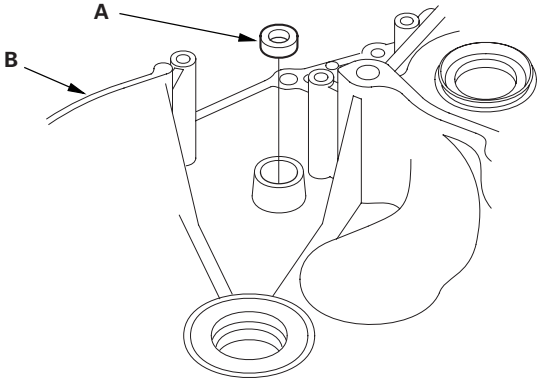

2. Install the new oil seal (A) in the torque converter housing in depth (B) of 0.5—1.5 mm (0,02—0.06 in.) below the housing surface with the special tools.

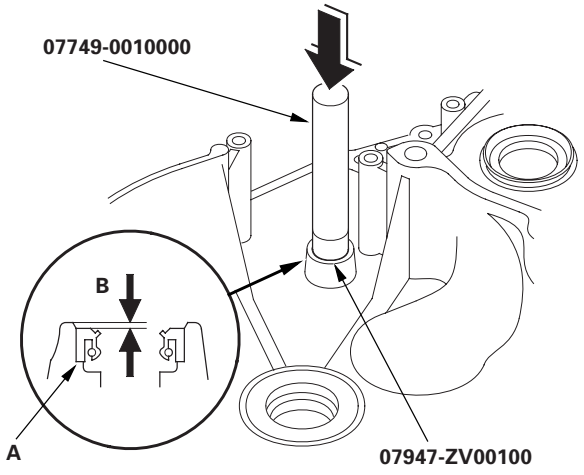

Mainshaft Disassembly, Inspection, and Reassembly

1. Inspect the thrust needle bearing and the needle bearing for galling and rough movement.

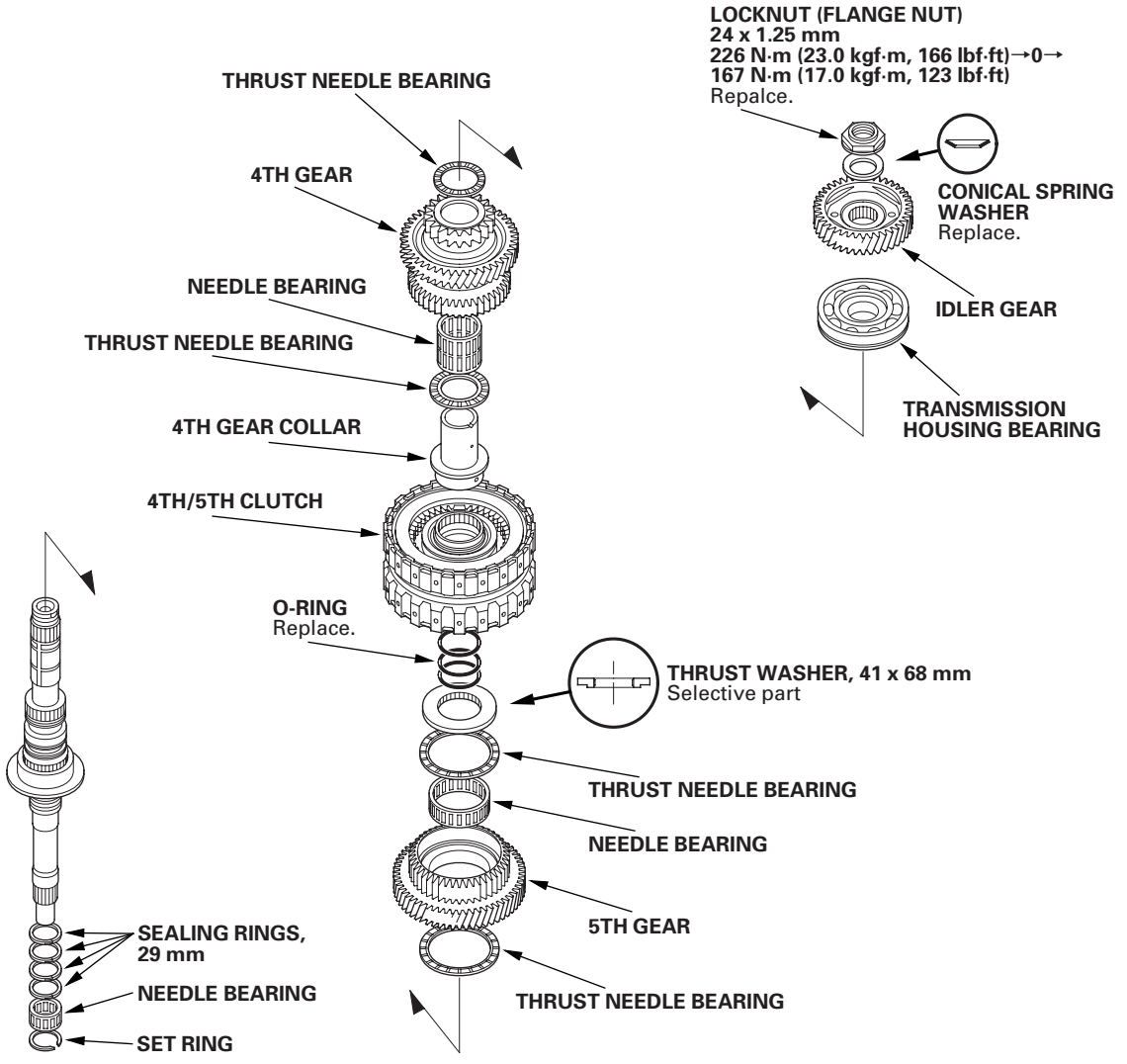

2. Inspect the splines for excessive wear and damage.
3. Check shaft bearing surface for scoring and excessive wear.
4. Before installing the O-rings, wrap the shaft splines with tape to prevent O-ring damage.
5. Lubricate all parts with ATF during assembly.
6. Install the conical spring washer, 41 x 68 mm thrust washer in the direction shown.
7. Replace the locknut and conical spring washer with new ones when assembling the transmission.
8. Check the clearance of the 5th gear (see page 14-357).

Mainshaft 5th Gear Clearance Inspection

1. Remove the mainshaft transmission housing bearing (see page 14-340).

2. Assemble 41 x 68 mm thrust washer (A), 4th/5th clutch (B), 4th gear collar (C), and transmission housing bearing (D) on the mainshaft (E). Do not install the O-rings during inspection.

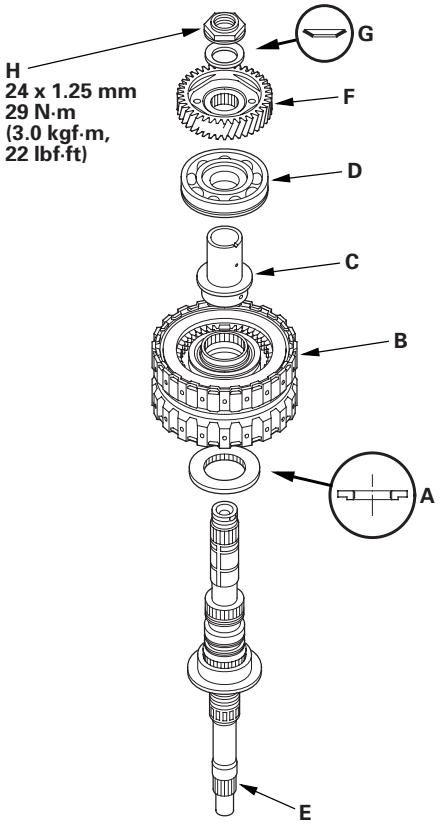

3. Install the idler gear (F) on the mainshaft by a press, then install the conical spring washer (G) and locknut (H).

4. Tighten the locknut to 29 N·m (3.0 kgf·m, 22 lbf·ft).

5. Measure the clearance between the mainshaft flange (A) and 41 x 68 mm thrust washer (B) with a feeler gauge (C), in at least three places. Use the average as the actual clearance.

   Standard: 0.03—0.11 mm (0.001—0.004 in.)

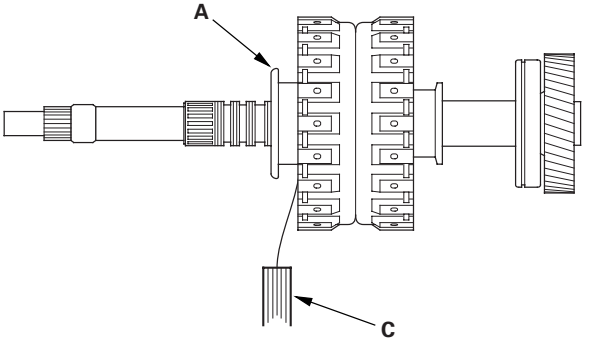

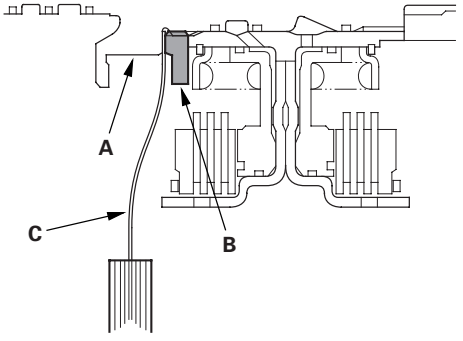

(cont'd)

Mainshaft 5th Gear Clearance Inspection (cont'd)

6. If the clearance is out of standard, remove the 41 x 68 mm thrust washer and measure its thickness.

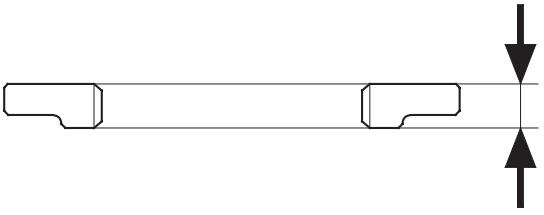

7. Select and install a new thrust washer, then recheck.

THRUST WASHER, 41 x 68 mm

No.	Part Number	Thickness
1	90414-PRP-010	6.35 mm (0.250 in.)
2	90415-PRP-010	6.40 mm (0.252 in.)
3	90416-PRP-010	6.45 mm (0.254 in.)
4	90417-PRP-010	6.50 mm (0.256 in.)
5	90418-PRP-010	6.55 mm (0.258 in.)
6	90419-PRP-010	6.60 mm (0.260 in.)

8. After replacing the thrust washer, make sure the clearance is within standard.

9. Disassemble the shaft and gears.

10. Reinstall the bearing in the transmission housing (see page 14-341).

Countershaft Disassembly, Inspection, and Reassembly

2002 Model: MRMA Transmission Number 1000001-1021247

1. Inspect the thrust needle bearing and the needle bearing for galling and rough movement.

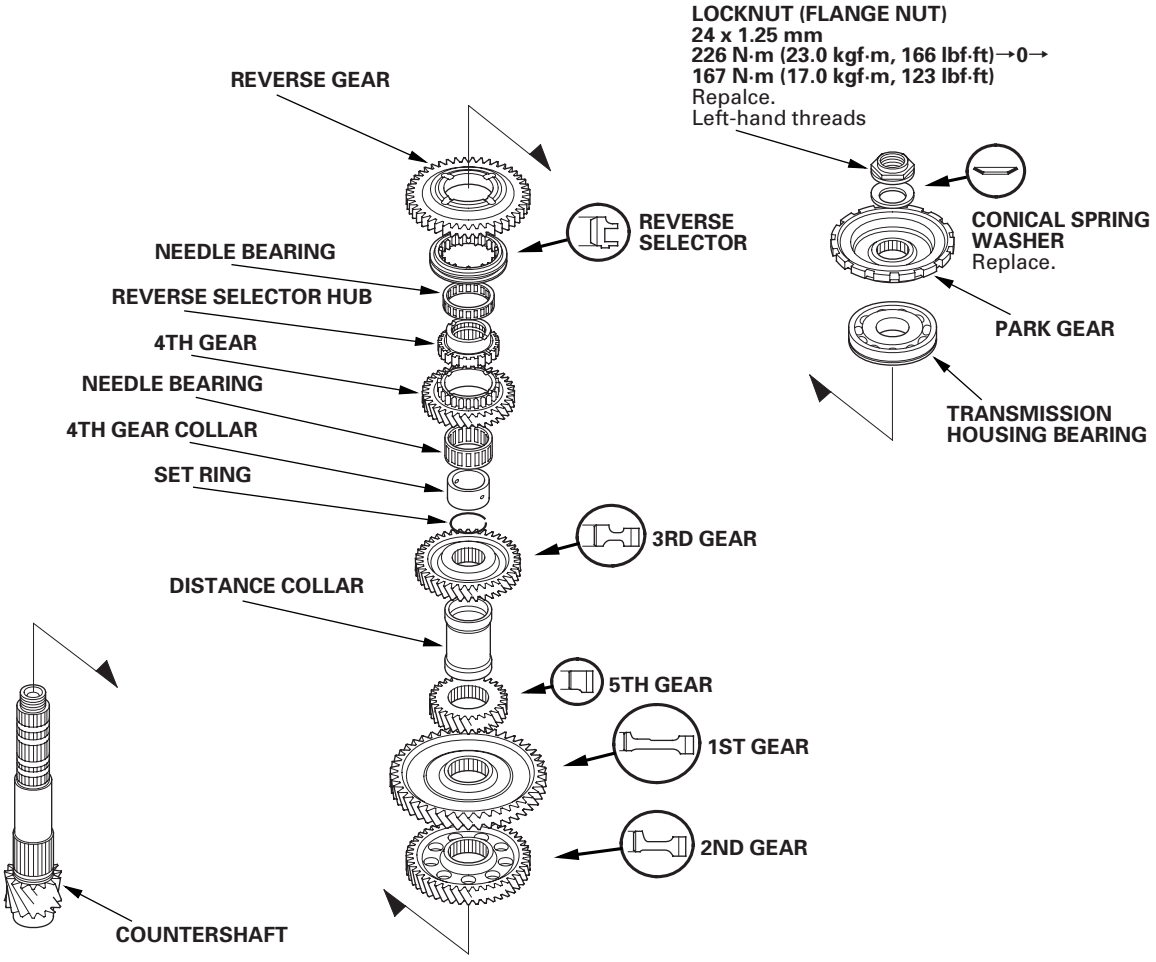

2. Inspect the splines for excessive wear and damage.

3. Check shaft bearing surface for scoring and excessive wear.

4. Lubricate all parts with ATF during assembly.

5. Install the conical spring washer, reverse selector, 3rd gear, 5th gear, 1st gear, and 2nd gear in the direction shown.

6. Replace the locknut and conical spring washer with new ones when assembling the transmission. The countershaft locknut has left-hand threads.

7. Some reverse selector hubs, 4th gear collars, and 3rd gears are press-fitted to the countershaft; special tools are needed to remove them (see page 14-360) and install them (see page 14-361).

Countershaft Reverse Selector Hub, 4th Gear Collar, and 3rd Gear Removal

Special Tools Required
Bearing separator 07KAF-PS30200

2002 Model: MRMA Transmission Number 1000001-1021247

NOTE:
- Some reverse selector hubs, 4th gear collars, and 3rd gears are not press-fitted, and can be removed without using the special tool and a press.
- Place a shaft protector between the countershaft and a press to prevent damaging the countershaft.

1. Install the special tool on the 4th gear (A). Set a press on the countershaft (B) with putting a spacer (C) between the press and countershaft, and remove the reverse selector hub (D).

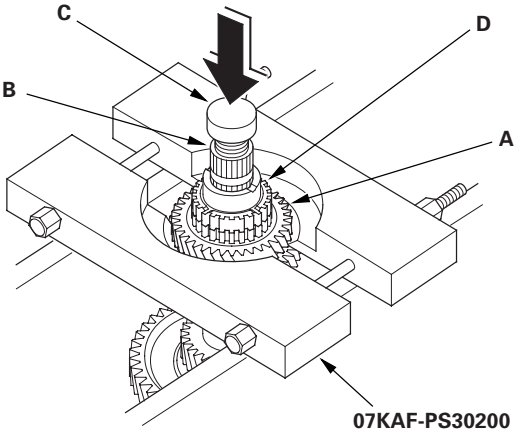

2. Remove the needle bearing, then install the special tool by inserting it into the opening between the 3rd gear and 4th gear collar (A).

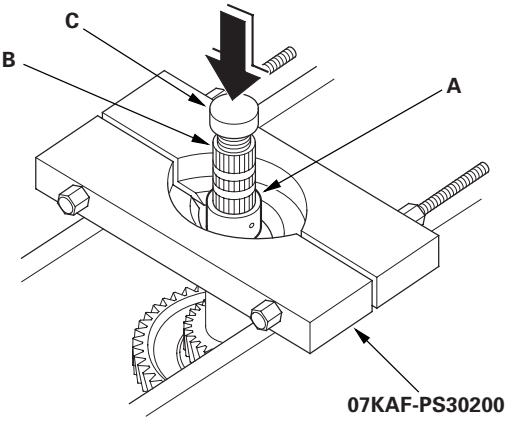

3. Set the press on the countershaft (B) with putting a spacer between the press and countershaft, and remove the collar.

4. Remove the set ring.

5. Set the press on the countershaft (A) with putting a spacer (B) between the press and countershaft, and remove the 3rd gear (C).

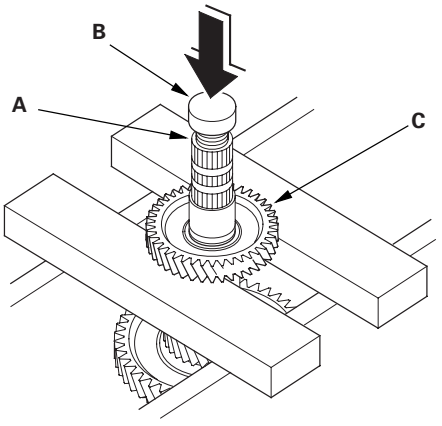

6. Remove the distance collar, 5th gear, 1st gear, and 2nd gear.

Countershaft 3rd Gear, 4th Gear Collar, and Reverse Selector Hub Installation

Special Tools Required
- Driver, 40 mm I.D. 07746-0030100
- Attachment, 35 mm I.D. 07746-0030400

2002 Model: MRMA Transmission Number 1000001-1021247

NOTE: Some reverse selector hubs, 4th gear collars, and 3rd gears are not press-fitted, and can be installed without using the special tool and a press.

1. Install the 2nd gear, 1st gear, 5th gear, and distance collar on the countershaft.

2. Slide the 3rd gear (A) over the countershaft, and press it in place with the special tool and a press.

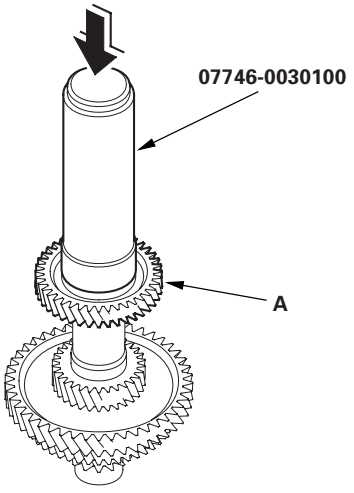

3. Install the set ring.

4. Install the 4th gear collar (A) with the special tools and a press.

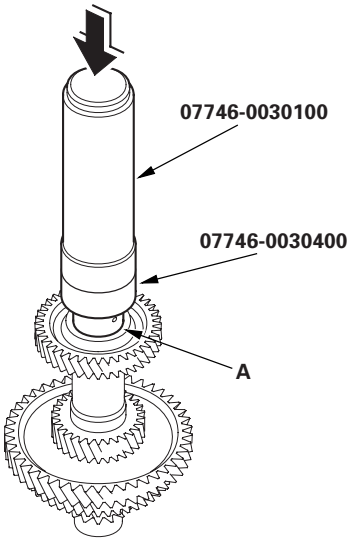

5. Install the needle bearing and 4th gear.

6. Install the reverse selector hub (A) with the special tool and a press.

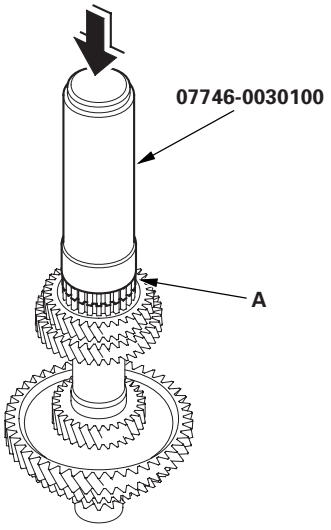

Countershaft Reverse Selector Hub and 3rd Gear Removal

Special Tools Required
Bearing separator 07KAF-PS30200

2002 Model: MRMA Transmission Number 1021248 or later 2003-2006 Models

1. Install the special tool on the 4th gear (A). Set a press on the countershaft (B) with putting a spacer (C) between the press and countershaft, and remove the reverse selector hub (D).

   NOTE: Some reverse selector hubs are not press-fitted, and can be removed without using the special tool and a press.

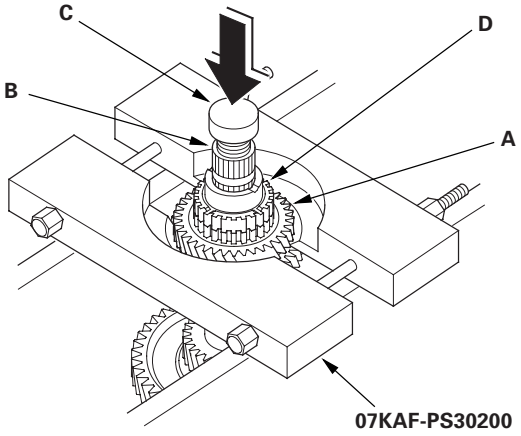

2. Remove the needle bearing, set ring, 35 x 47 x 7.8 mm collar, and cotters.

3. Set the press on the countershaft (A) with putting a spacer (B) between the press and countershaft, and remove the 3rd gear (C).

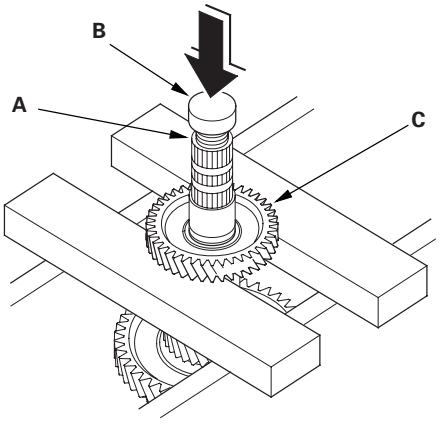

4. Remove the 37 x 41 x 57.8 mm collar, 5th gear, 1st gear, and 2nd gear.

Countershaft 3rd Gear and Reverse Selector Hub Installation

Special Tools Required
Driver, 40 mm I.D. 07746-0030100

2002 Model: MRMA Transmission Number 1021248 or later 2003-2006 Models

1. Install the 2nd gear, 1st gear, 5th gear, and 37 x 41 x 57.8 mm collar on the countershaft.

2. Slide the 3rd gear (A) over the countershaft, and press it in place with the special tool and a press.

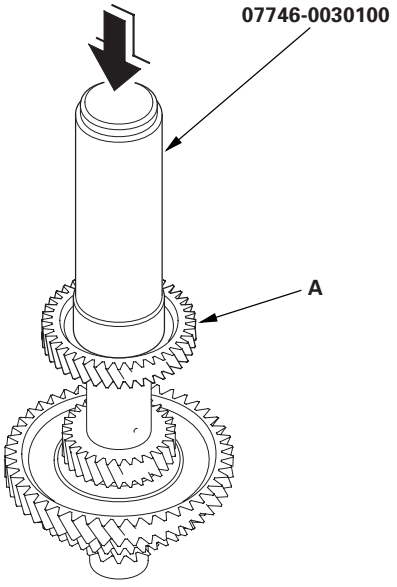

3. Install the cotters, 35 x 47 x 7.8 mm collar, set ring, needle bearing, and 4th gear.

4. Slide the reverse selector hub (A) over the countershaft, then press it in place with the special tool and a press.

   NOTE: Some reverse selector hubs are not press-fitted and can be installed without using the special tool and a press.

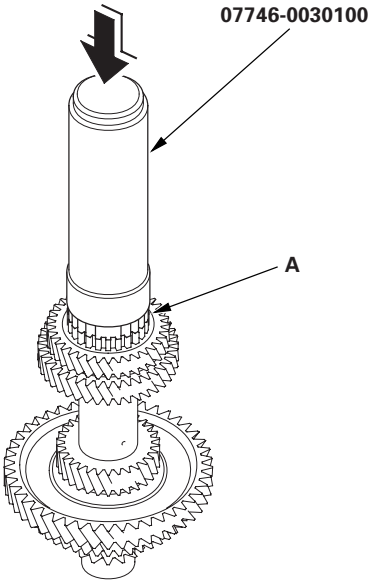

Secondary Shaft Disassembly, Inspection, and Reassembly

1. Inspect the thrust needle bearing and the needle bearing for galling and rough movement.

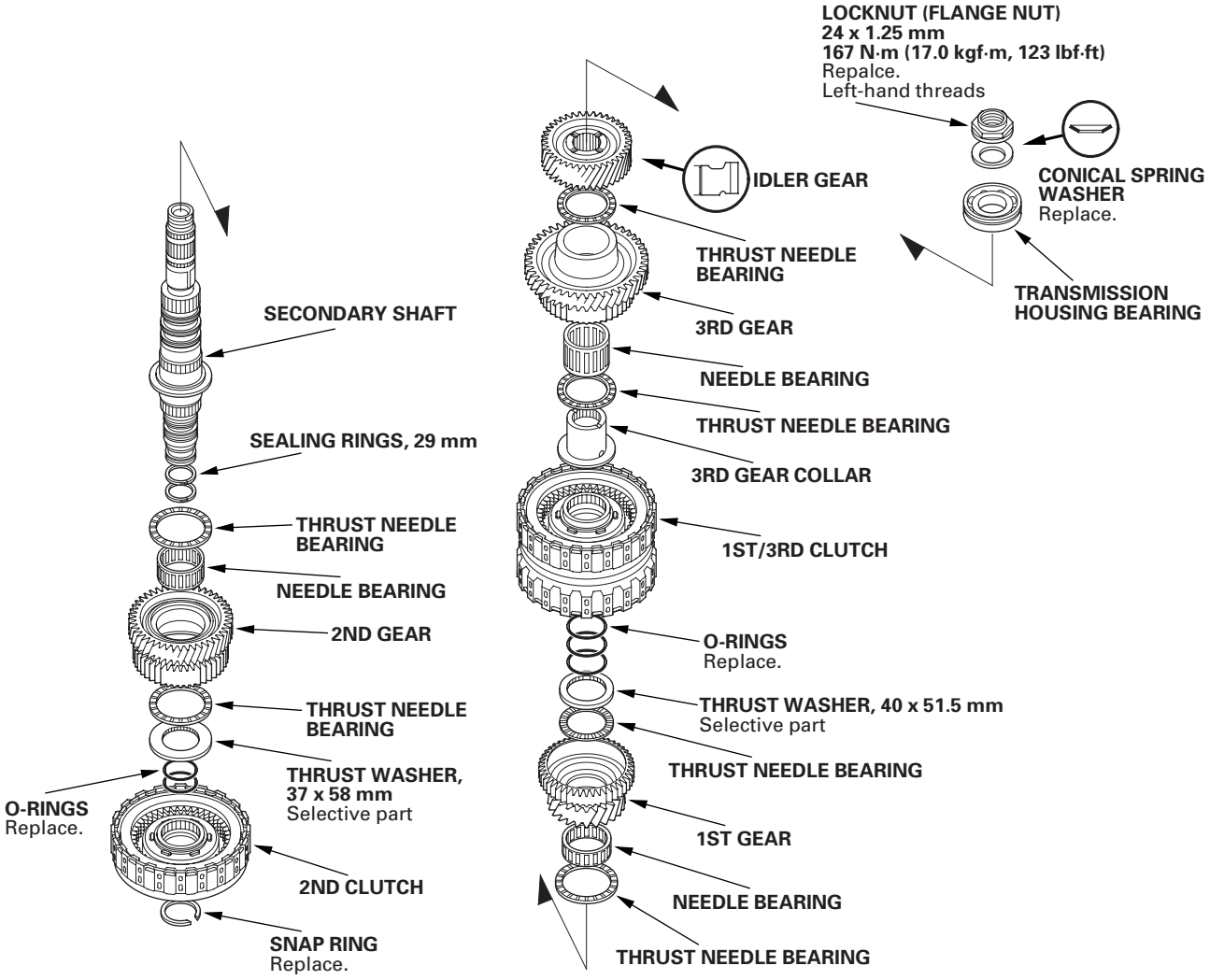

2. Inspect the splines for excessive wear and damage.

3. Check shaft bearing surface for scoring and excessive wear.

4. Before installing the O-rings, wrap the shaft splines with tape to prevent O-ring damage.

5. Lubricate all parts with ATF during assembly.

6. Install the conical spring washer, idler gear in the direction shown.

7. Replace the locknut and conical spring washer with new ones when assembling the transmission. The locknut has left-hand threads.

8. Check the clearance of 2nd gear (see page 14-367) and 1st gear (see page 14-369).

Secondary Shaft Ball Bearing, Idler Gear Removal and Installation

Special Tools Required
Attachment, 42 mm I.D. 07QAD-P0A0100

Removal

Place a shaft protector (A) on the secondary shaft (B), and set the puller (C) under the idler gear (D), then remove the idler gear and ball bearing (E).

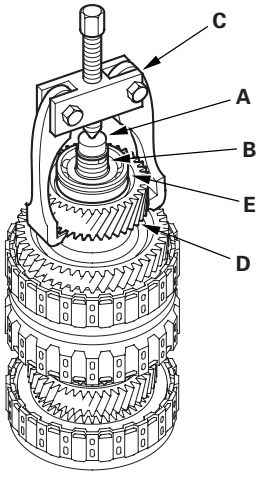

Installation

Install the idler gear (A) on the secondary shaft (B), and install the ball bearing (C) over the idler gear with the special tool and a press.

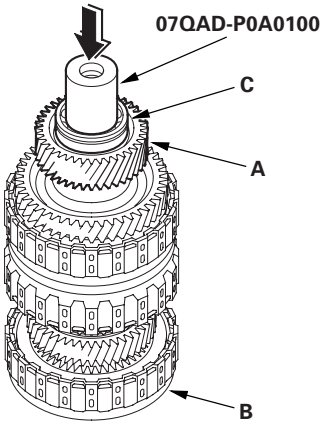

Secondary Shaft 2nd Gear Clearance Inspection

1. Install the thrust needle bearing (A), needle bearing (B), 2nd gear (C), thrust needle bearing (D), 37 x 58 mm thrust washer (E), and 2nd clutch (F) on the secondary shaft (G), then secure them with the snap ring (H).

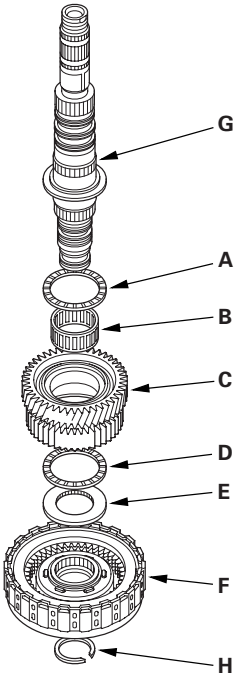

2. Measure the clearance between the snap ring (A) and the 2nd clutch guide (B) with a feeler gauge (C), in at least three places. Use the average as the actual clearance.

   Standard: 0.04—0.12 mm (0.002—0.005 in.)

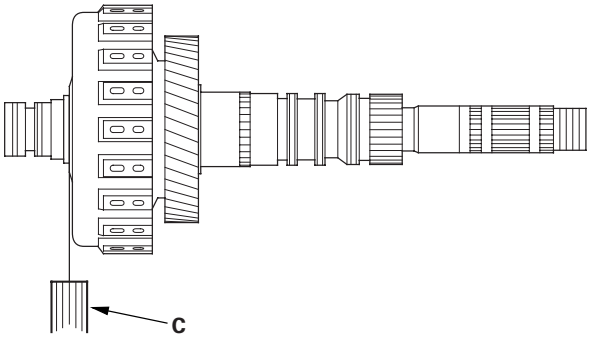

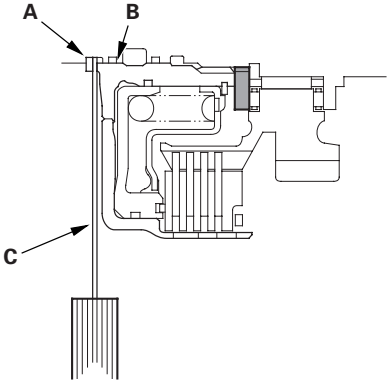

(cont'd)

Secondary Shaft 2nd Gear Clearance Inspection (cont'd)

3. If the clearance is out of standard, remove the 37 x 58 mm thrust washer and measure its thickness.

4. Select and install a new thrust washer, then recheck.

THRUST WASHER, 37 x 58 mm

No.	Part Number	Thickness
1	90511-PRP-010	3.900 mm (0.154 in.)
2	90512-PRP-010	3.925 mm (0.155 in.)
3	90513-PRP-010	3.950 mm (0.156 in.)
4	90514-PRP-010	3.975 mm (0.156 in.)
5	90515-PRP-010	4.000 mm (0.157 in.)
6	90516-PRP-010	4.025 mm (0.158 in.)
7	90517-PRP-010	4.050 mm (0.159 in.)
8	90518-PRP-010	4.075 mm (0.160 in.)
9	90519-PRP-010	4.100 mm (0.161 in.)
10	90520-PRP-010	4.125 mm (0.162 in.)
11	90521-PRP-010	4.150 mm (0.163 in.)
12	90522-PRP-010	4.175 mm (0.164 in.)
13	90523-PRP-000	4.200 mm (0.165 in.)
14	90524-PRP-000	4.225 mm (0.166 in.)
15	90525-PRP-000	4.250 mm (0.167 in.)
16	90526-PRP-000	4.275 mm (0.168 in.)
17	90527-PRP-000	4.300 mm (0.169 in.)
18	90528-PRP-000	4.325 mm (0.170 in.)
19	90529-PRP-000	4.350 mm (0.171 in.)
20	90530-PRP-000	4.375 mm (0.172 in.)

5. After replacing the thrust washer, make sure the clearance is within standard.

6. Disassemble the shaft and gears.

Secondary Shaft 1st Gear Clearance Inspection

Special Tools Required
Attachment, 42 mm I.D. 07QAD-P0A0100

1. Install the thrust needle bearing (A), needle bearing (B), 1st gear (C), thrust needle bearing (D), 40 x 51.5 mm thrust washer (E), 1st/3rd clutch (F), and 3rd gear collar (G) on the secondary shaft (H).

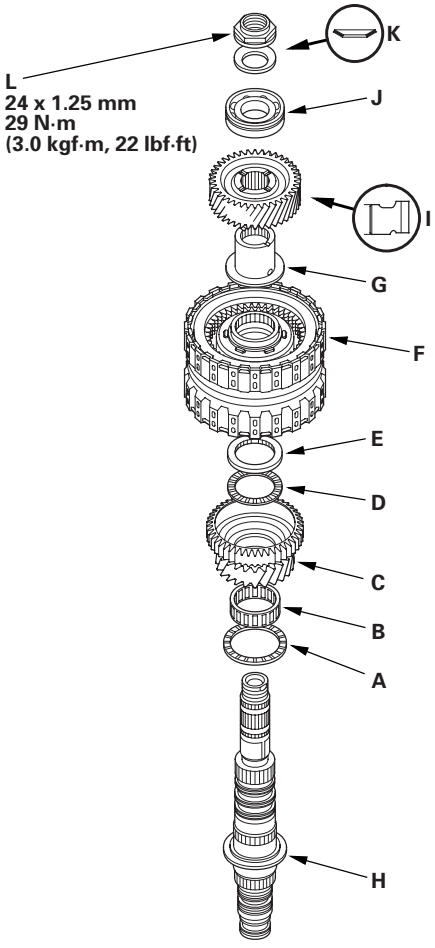

2. Install the idler gear (I), then install the ball bearing (J) on the idler gear with the special tool and a press.

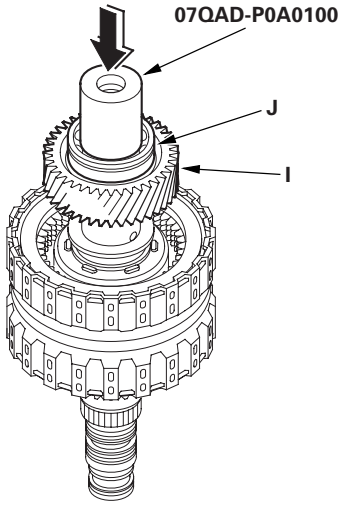

3. Install the conical spring washer (K) and locknut (L), then tighten the locknut to 29 N·m (3.0 kgf·m, 22 lbf·ft).

4. Turn the secondary shaft assembly upside down, and set the dial indicator (A) on the 1st gear (B).

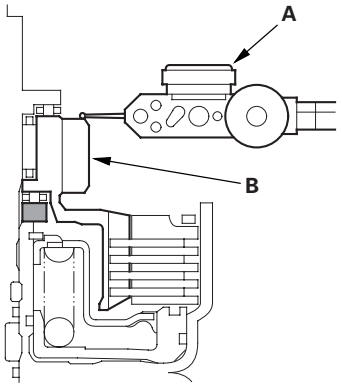

(cont'd)

Secondary Shaft 1st Gear Clearance Inspection (cont'd)

5. Hold the secondary shaft, and measure the 1st gear axial clearance in at least three places while moving the 1st gear (A). Use the average as the actual clearance.

   Standard: 0.04—0.12 mm (0.002—0.005 in.)

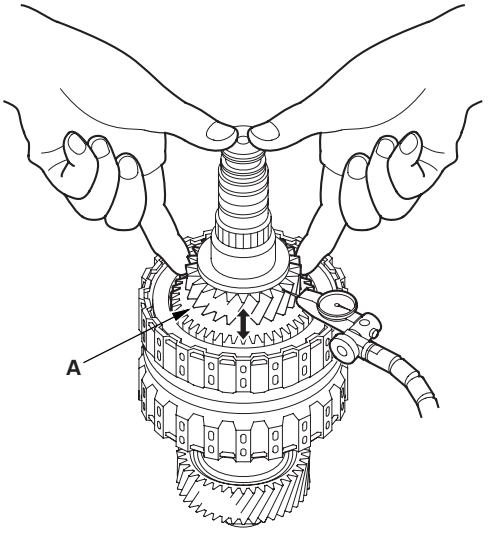

6. If the clearance is out of standard, remove the 40 x 51.5 mm thrust washer and measure its thickness.

7. Select and install a new thrust washer, then recheck.

   THRUST WASHER, 40 x 51.5 mm

No.	Part Number	Thickness
1	90503-PRP-000	4.80 mm (0.189 in.)
2	90504-PRP-000	4.85 mm (0.191 in.)
3	90505-PRP-000	4.90 mm (0.193 in.)
4	90506-PRP-000	4.95 mm (0.195 in.)
5	90507-PRP-000	5.00 mm (0.197 in.)
6	90508-PRP-000	5.05 mm (0.199 in.)

8. After replacing the thrust washer, make sure the clearance is within standard.

9. Disassemble the shaft and gears.

Idler Gear Shaft Removal and Installation

1. Remove the snap ring (A), cotter retainer (B), and cotter keys (C). Do not distort the snap ring.

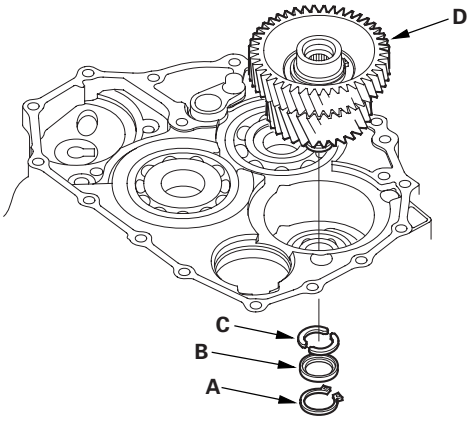

2. Remove the idler gear shaft/idler gear assembly (D) from the transmission housing.

3. Check the snap rings and cotter retainer for wear and damage. Replace them if they are worn, distorted, or damaged.

4. Install the idler gear and shaft in the reverse order of removal.

Idler Gear/Idler Gear Shaft Replacement

Special Tools Required
- Driver 07749-0010000
- Attachment, 32 x 35 mm 07746-0010100

1. Remove the snap ring from the idler gear/idler shaft assembly.

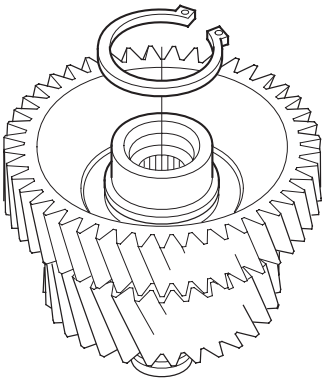

2. Remove the idler gear shaft (A) from the idler gear (B) with the special tools and a press.

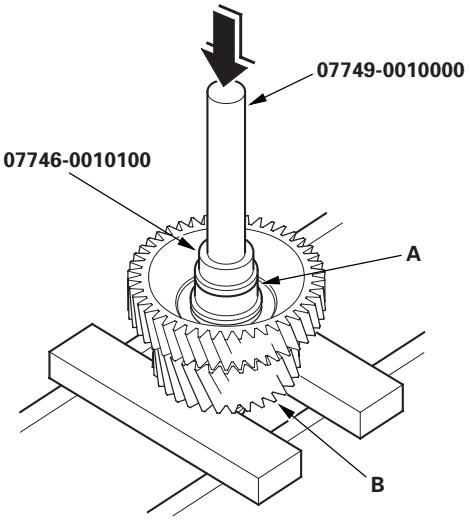

3. Replace the idler gear or idler gear shaft, and attach the idler gear shaft to the idler gear.

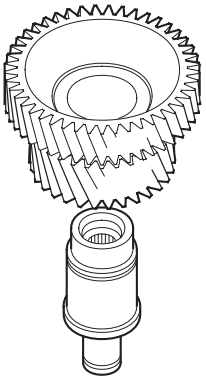

4. Install the idler gear shaft (A) in the idler gear (B) with the special tools and a press.

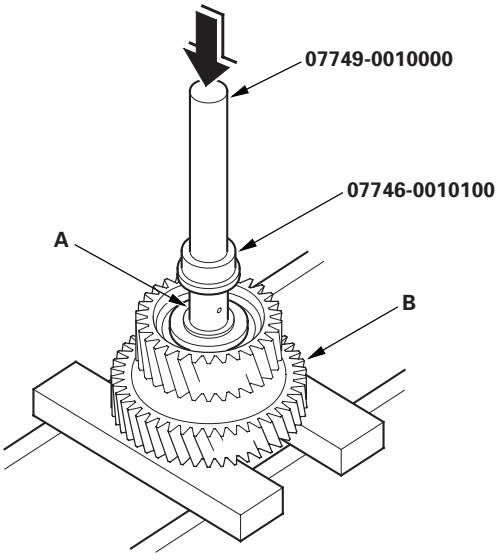

5. Install the snap ring.

Clutch Disassembly

Special Tools Required
- Clutch spring compressor attachment 07LAE-PX40100 or 07HAE-PL50101
- Clutch spring compressor bolt assembly 07GAE-PG40200 or 07GAE-PG4020A

1. Remove the snap ring with a screwdriver.

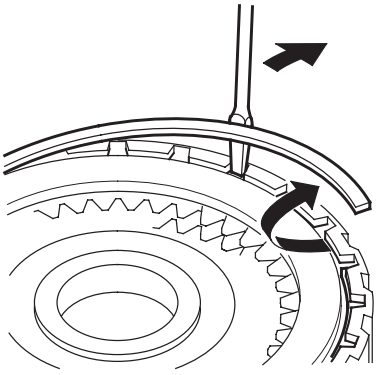

2. Remove the clutch end plate (A), clutch discs (B) (4), clutch waved-plates (C) (4), and waved spring (D) from the 1st clutch drum (E).

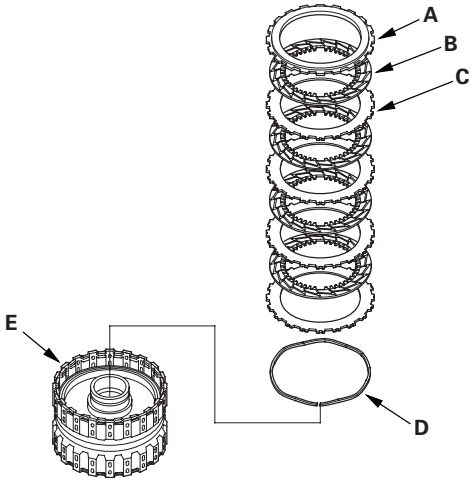

3. Remove the clutch end plate (A), clutch discs (B) (4), clutch waved-plates (C) (3), clutch flat-plate (D), and waved spring (E) from the 2nd clutch drum (F).

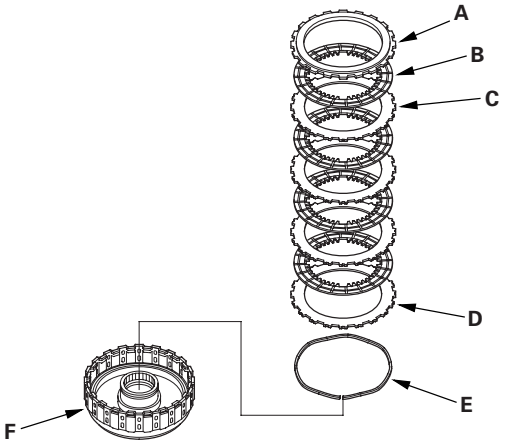

4. Make a reference mark on the clutch flat plate (D).

5. Remove the clutch end plate (A), clutch discs (B) (4), clutch waved-plates (C) (3), clutch flat-plate (D), and waved spring (E) from the 3rd clutch drum (F).

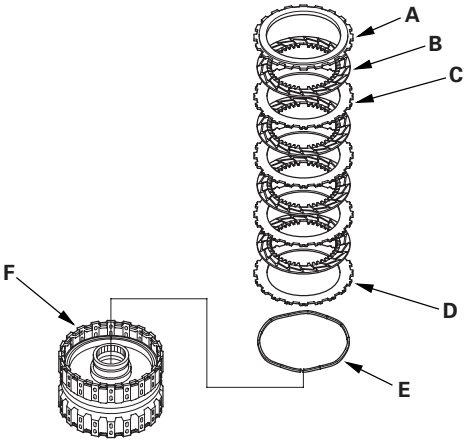

6. Make a reference mark on the clutch flat plate (D).

(cont'd)

Clutch Disassembly (cont'd)

7. Remove the clutch end plate (A), clutch discs (B) (3), clutch waved-plates (C) (3), and waved spring (D) from the 4th clutch drum (E).

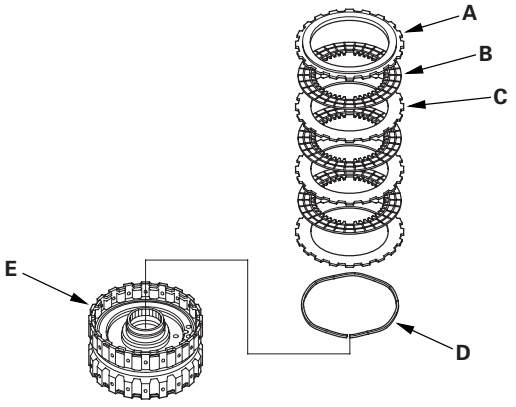

8. Remove the clutch end plate (A), clutch discs (B) (3), clutch waved-plates (C) (3), and waved spring (D) from the 5th clutch drum (E).

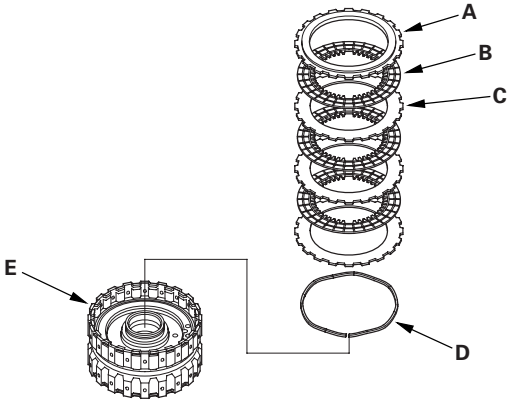

9. Install the special tools.

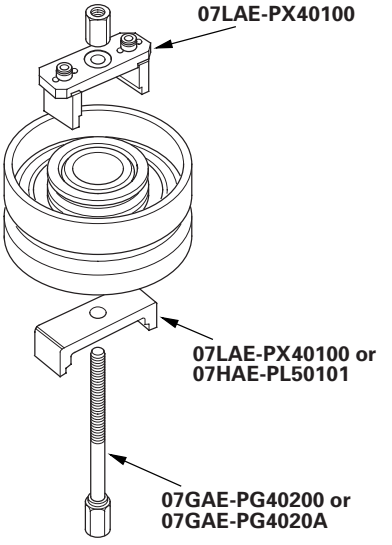

10. Set the special tool (A) on the spring retainer (B) of the 1st, 2nd, and 3rd clutches so the special tool works on the clutch return spring (C).

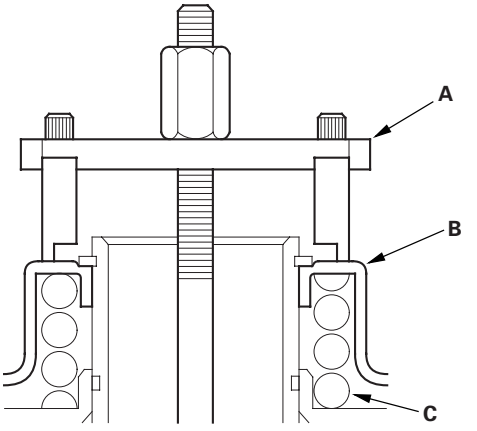

11. Be sure the special tool (A) is adjusted to have full contact with the spring retainer (B) on the 4th and 5th clutches.

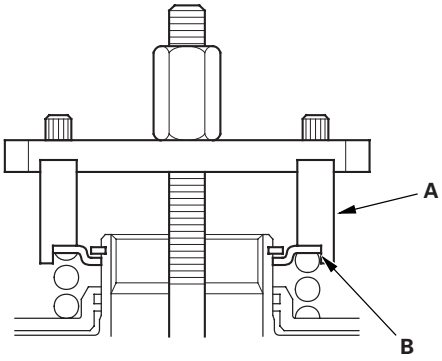

12. If either end of the special tool is set over an area of the spring retainer which is unsupported by the return spring, the retainer may be damaged.

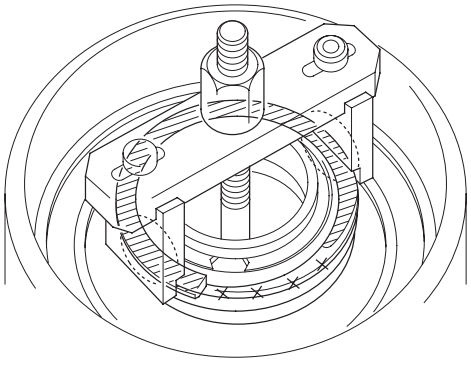

13. Compress the return spring until the snap ring can be removed.

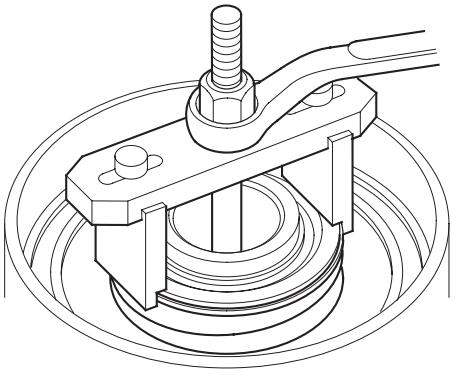

14. Remove the snap ring with snap ring pliers.

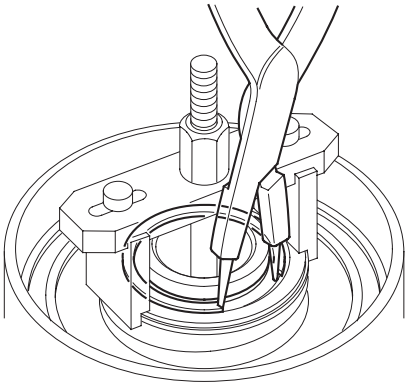

15. Remove the special tools.

(cont'd)

Clutch Disassembly (cont'd)

16. Remove the snap ring (A), spring retainer (B), and return spring (C).

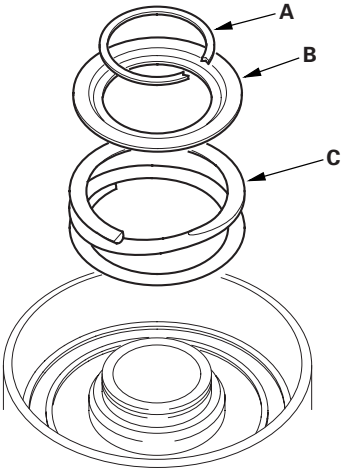

17. Wrap a shop rag around the clutch drum (A), and apply air pressure to the fluid passage to remove the piston (B). Place a finger tip on the other passage while applying air pressure.

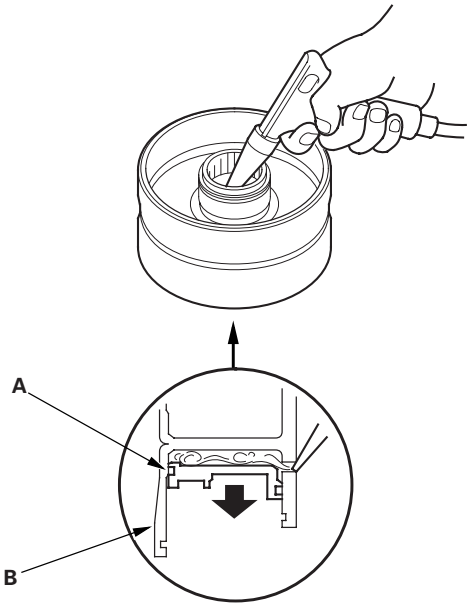

18. Remove the piston, then remove the O-rings from the 4th and 5th clutch pistons.

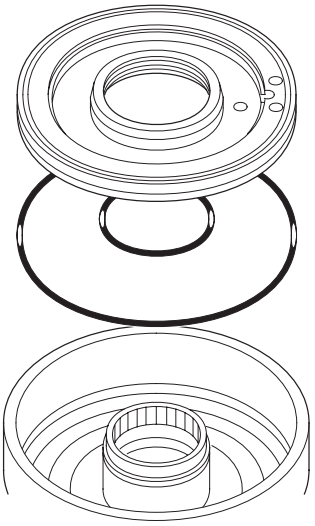

19. Remove the piston, then remove the O-ring from the 1st, 2nd, and 3rd clutch drum, and remove the O-ring from each clutch piston.

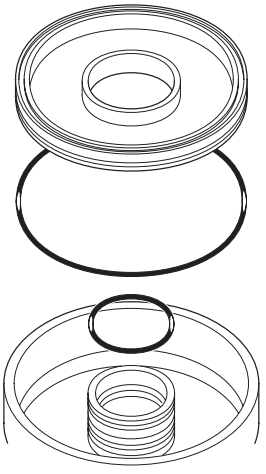

Clutch Inspection

1. Inspect the 4th and 5th clutch pistons and clutch piston check valves (A).

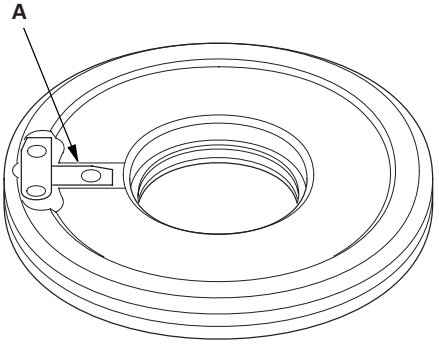

2. If the clutch piston check valve is loose or damaged, replace the clutch piston.

3. Check the spring retainer for wear and damage.

4. Check the oil seal (A) on the spring retainer of the 1st, 2nd, and 3rd clutches for wear, damage, and peeling.

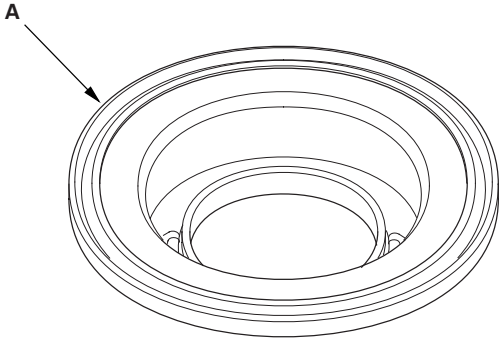

5. If the oil seal is worn, damaged, or peeling, replace the spring retainer.

6. Inspect the clutch discs, clutch-plates, and clutch end plate for wear, damage, and discoloration.

   Standard Thickness
   Clutch Discs: 1.94 mm (0.076 in.)
   Clutch Plates
   1st, 2nd, and 3rd: 2.00 mm (0.079 in.)
   4th and 5th
   2002-2004 models: 2.00 mm (0.079 in.)
   2005-2006 models: 2.30 mm (0.091 in.)

7. If the clutch discs are worn or damaged, replace them as a set. If the clutch discs are replaced, inspect the clutch-end-plate-to-top-disc clearance.

8. If any plate is worn, damaged, or discolored, replace the damaged plate with the new plate, and inspect the other waved-plates for a phase difference. If the clutch plate is replaced, inspect the clutch-end-plate-to-top-disc clearance.

9. If the clutch end plate is worn, damaged, or discolored, inspect the clutch-end-plate-to-top-disc clearance, then replace the clutch end plate.

Clutch Waved-plate Phase Difference Inspection

1. Place the clutch waved-plate (A) on a surface plate, and set a dial indicator (B) on the waved-plate.

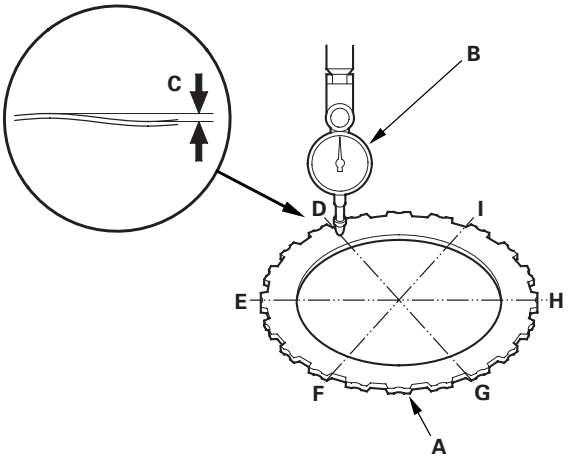

2. Find the bottom (D) of a phase difference of the waved-plate, zero the dial indicator and make a reference mark on the bottom of the waved-plate.

3. Rotate the waved-plate about 60-degrees apart from the bottom while holding the waved-plate by its circumference. The dial indicator should be at the top (E) of a phase difference. Do not rotate the waved-plate while holding its surface, always rotate it with holding its circumference.

4. Read the dial indicator. The dial indicator reads the phase difference (C) of the waved-plate between bottom and top.

   Standard: 0.05 mm (0.002 in.) minimum

5. Rotate the waved-plate about 60-degrees. The dial indicator should be at the bottom of a phase difference (F and H), and zero the dial indicator.

6. Measure the phase difference at the other two tops (G and I) of the waved-plate by following steps 3 through 5.

7. If the two values of the three measurements are within the standard, the waved-plate is OK. If the two values of the three measurements are out of the standard, replace the waved-plate.

Clutch Clearance Inspection

Special Tools Required
Clutch compressor attachment 07ZAE-PRP0100

1. Inspect the clutch piston, discs, plates, and end plate for wear and damage (see page 14-377), and inspect clutch waved-plate phase difference (see page 14-378), if necessary.

2. Install the clutch piston in the clutch drum. Do not install the O-rings during inspection.

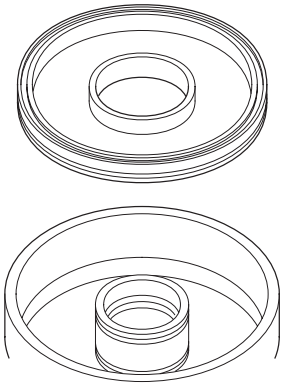

3. Install the waved spring (A) in the 1st clutch drum (B). Starting with the clutch waved-plate, alternately install the clutch plate (C) (4) and discs (D) (4), then install the clutch end plate (E) with the flat side toward the disc.

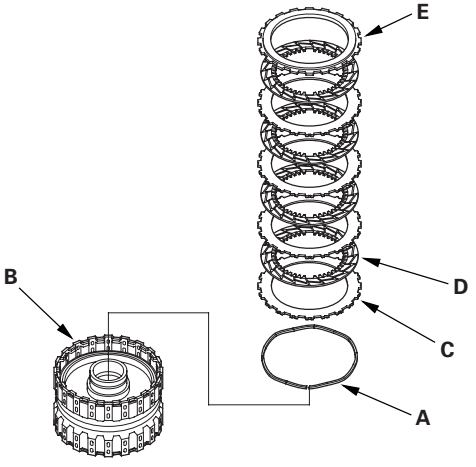

4. Install the waved spring (A) in the 2nd clutch drum (B). Install the clutch flat-plate (C), then starting with the clutch disc, alternately install the clutch disc (D) (4) and waved-plates (E) (3), then install the clutch end plate (F) with the flat side toward the disc.

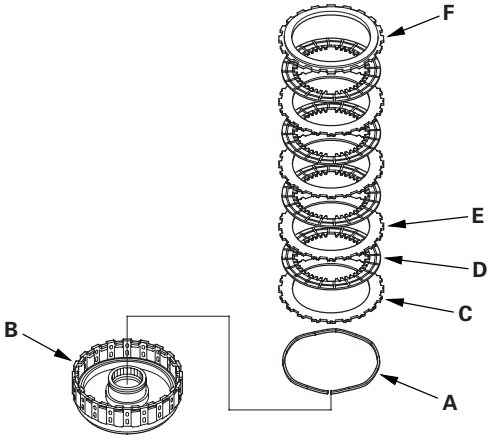

5. Install the waved spring (A) in the 3rd clutch drum (B). Install the clutch flat-plate (C), then starting with the clutch disc, alternately install the clutch disc (D) (4) and waved-plates (E) (3), then install the clutch end plate (F) with the flat side toward the disc.

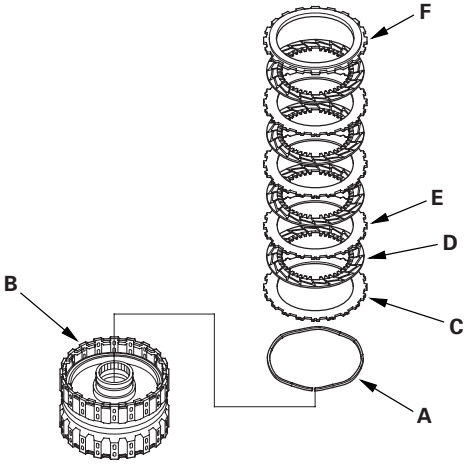

(cont'd)

Clutch Clearance Inspection (cont'd)

6. Install the waved spring (A) in the 4th clutch drum (B). Starting with the clutch waved-plate, alternately install the clutch plate (C) (3) and discs (D) (3), then install the clutch end plate (E) with the flat side toward the disc.

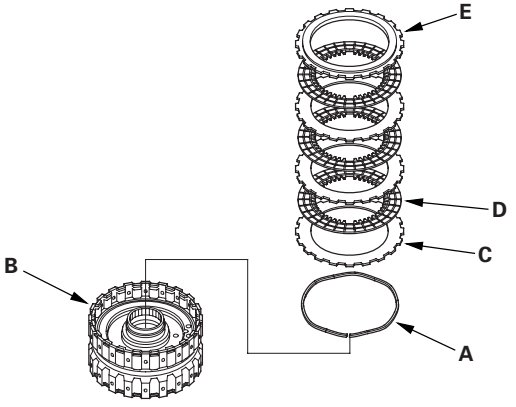

7. Install the waved spring (A) in the 5th clutch drum (B). Starting with the clutch waved-plate, alternately install the clutch plate (C) (3) and discs (D) (3), then install the clutch end plate (E) with the flat side toward the disc.

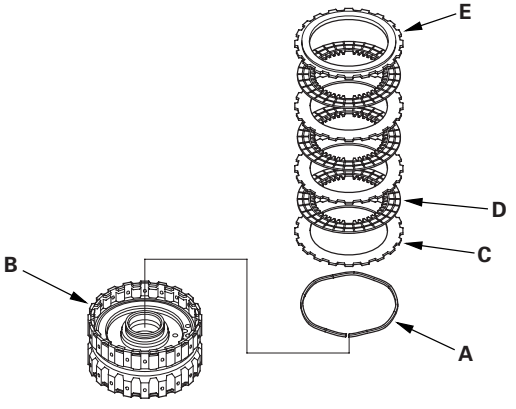

8. Install the snap ring with a screwdriver.

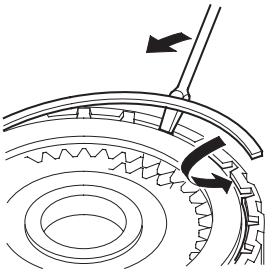

9. Set a dial indicator (A) on the clutch end plate (B).

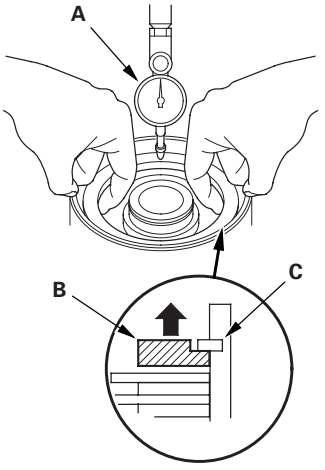

10. Zero the dial indicator with the clutch end plate lifted up to the snap ring (C).

11. Release the clutch end plate to lower the clutch end plate, then put the special tool on the end plate (A).

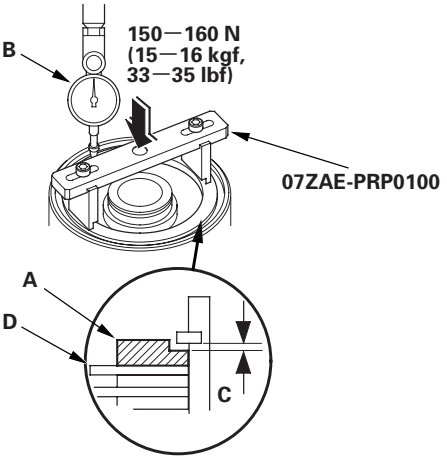

12. Press the special tool down with 150—160 N (15—16 kgf, 33—35 lbf) using a force gauge, and read the dial indicator (B). The dial indicator reads the clearance (C) between the clutch end plate and top disc (D). Take measurements in at least three places, and use the average as the actual clearance.

    Clutch End Plate-to-Top Disc Clearance:
    Service Limit:
    1st Clutch: 1.23—1.43 mm (0.048—0.056 in.)
    2nd Clutch: 0.75—0.95 mm (0.030—0.037 in.)
    3rd Clutch: 0.83—1.03 mm (0.033—0.041 in.)
    4th Clutch: 0.73—0.93 mm (0.029—0.037 in.)
    5th Clutch: 0.73—0.93 mm (0.029—0.037 in.)

13. If the clearance is out of the service limit, select a new clutch end plate from the following table.

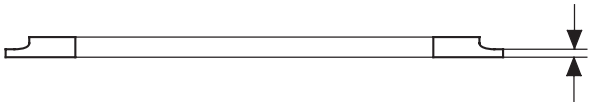

1ST and 3RD CLUTCH END PLATES

Mark	Part Number	Thickness
1	22551-PRP-003	2.3 mm (0.091 in.)
2	22552-PRP-003	2.4 mm (0.094 in.)
3	22553-PRP-003	2.5 mm (0.098 in.)
4	22554-PRP-003	2.6 mm (0.102 in.)
5	22555-PRP-003	2.7 mm (0.106 in.)
6	22556-PRP-003	2.8 mm (0.110 in.)
7	22557-PRP-003	2.9 mm (0.114 in.)
8	22558-PRP-003	3.0 mm (0.118 in.)
9	22559-PRP-003	3.1 mm (0.122 in.)
10	22560-PRP-003	3.2 mm (0.126 in.)
11	22561-PRP-003	3.3 mm (0.130 in.)
12	22562-PRP-003	3.4 mm (0.134 in.)

2ND CLUTCH END PLATES

Mark	Part Number	Thickness
1	22571-PRP-003	2.6 mm (0.102 in.)
2	22572-PRP-003	2.7 mm (0.106 in.)
3	22573-PRP-003	2.8 mm (0.110 in.)
4	22574-PRP-003	2.9 mm (0.114 in.)
5	22575-PRP-003	3.0 mm (0.118 in.)
6	22576-PRP-003	3.1 mm (0.122 in.)
7	22577-PRP-003	3.2 mm (0.126 in.)
8	22578-PRP-003	3.3 mm (0.130 in.)
9	22579-PRP-003	3.4 mm (0.134 in.)

4TH and 5TH CLUTCH END PLATES

2002 model: MRMA transmission number 1000001-1021247

Mark	Part Number	Thickness
11	22581-PRP-003	3.1 mm (0.122 in.)
12	22582-PRP-003	3.2 mm (0.126 in.)
13	22583-PRP-003	3.3 mm (0.130 in.)
14	22584-PRP-003	3.4 mm (0.134 in.)
15	22585-PRP-003	3.5 mm (0.138 in.)
16	22586-PRP-003	3.6 mm (0.142 in.)
17	22587-PRP-003	3.7 mm (0.146 in.)
18	22588-PRP-003	3.8 mm (0.150 in.)
19	22589-PRP-003	3.9 mm (0.154 in.)

4TH and 5TH CLUTCH END PLATES

2002 model: MRMA transmission number 1021248 or later 2003-2004 models

Mark	Part Number	Thickness
1	22581-PRP-901	3.0 mm (0.118 in.)
2	22582-PRP-901	3.1 mm (0.122 in.)
3	22583-PRP-901	3.2 mm (0.126 in.)
4	22584-PRP-901	3.3 mm (0.130 in.)
5	22585-PRP-901	3.4 mm (0.134 in.)
6	22586-PRP-901	3.5 mm (0.138 in.)
7	22587-PRP-901	3.6 mm (0.142 in.)
8	22588-PRP-901	3.7 mm (0.146 in.)
9	22589-PRP-901	3.8 mm (0.150 in.)

4TH and 5TH CLUTCH END PLATES

2005-2006 models

Mark	Part Number	Thickness
1	22581-RCL-003	2.1 mm (0.083 in.)
2	22582-RCL-003	2.2 mm (0.087 in.)
3	22583-RCL-003	2.3 mm (0.091 in.)
4	22584-RCL-003	2.4 mm (0.094 in.)
5	22585-RCL-003	2.5 mm (0.098 in.)
6	22586-RCL-003	2.6 mm (0.102 in.)
7	22587-RCL-003	2.7 mm (0.106 in.)
8	22588-RCL-003	2.8 mm (0.110 in.)
9	22589-RCL-003	2.9 mm (0.114 in.)

14. Install the new clutch end plate, then recheck the clearance.

    NOTE: If the thickest clutch end plate is installed, but the clearance is still over the service limit, replace the clutch discs and plates.

Clutch Reassembly

Special Tools Required
- Clutch spring compressor attachment 07LAE-PX40100 or 07HAE-PL50101
- Clutch spring compressor bolt assembly 07GAE-PG40200 or 07GAE-PG4020A

1. Soak the clutch discs thoroughly in ATF for a minimum of 30 minutes.

2. Install the new O-rings (A) on the 4th and 5th clutch piston (B).

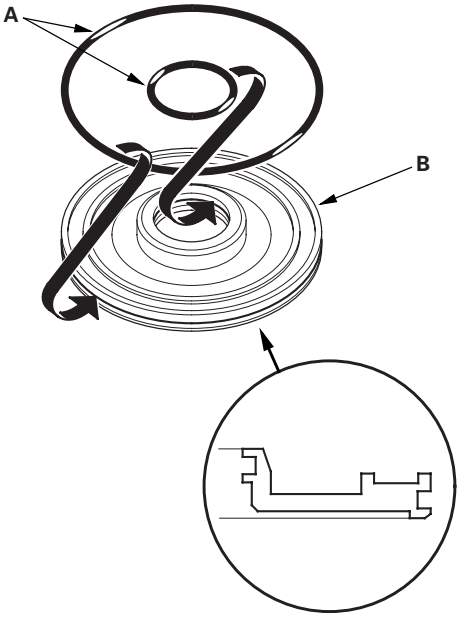

3. Install the new O-ring (A) in the 1st, 2nd, and 3rd clutch pistons (B), and install the new O-ring (C) on the clutch drums (D).

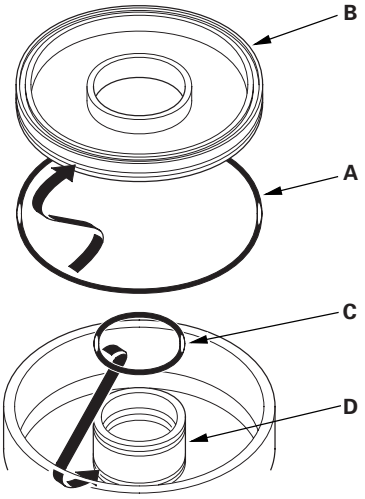

4. Install the clutch piston (A) in the clutch drum (B). Apply pressure and rotate to ensure proper seating. Lubricate the piston O-ring with ATF before installing. Do not pinch the O-ring by installing the piston with to much force.

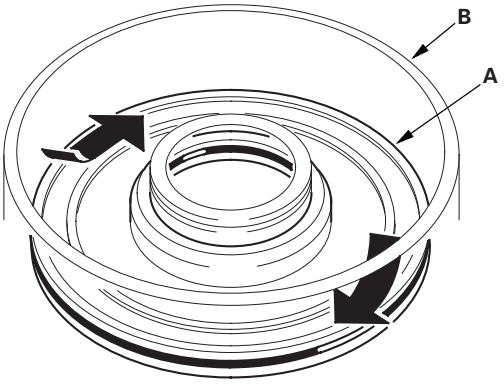

5. Install the return spring (A) and spring retainer (B), and position the snap ring (C) on the retainer.

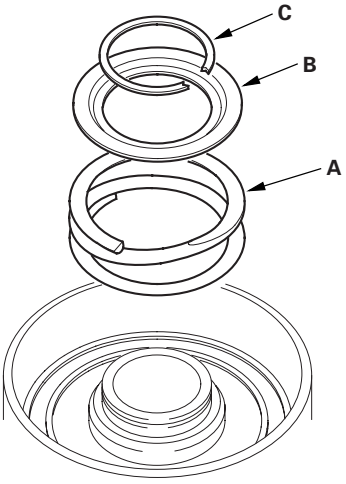

6. Install the special tools.

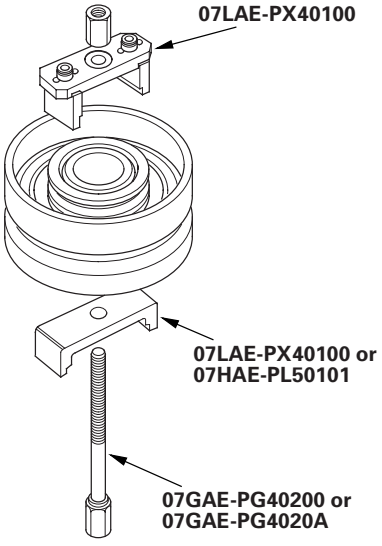

7. Set the special tool (A) on the spring retainer (B) of the 1st, 2nd, and 3rd clutches so the special tool works on the clutch return spring (C).

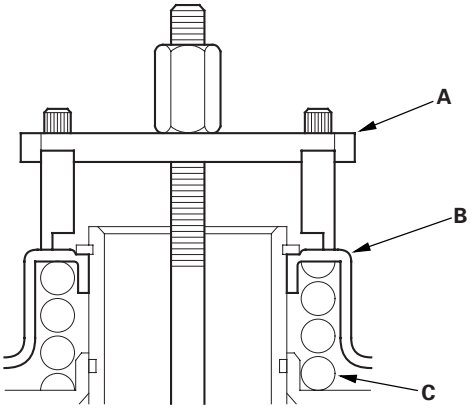

8. Be sure the special tool (A) is adjusted to have full contact with the spring retainer (B) on the 4th and 5th clutches.

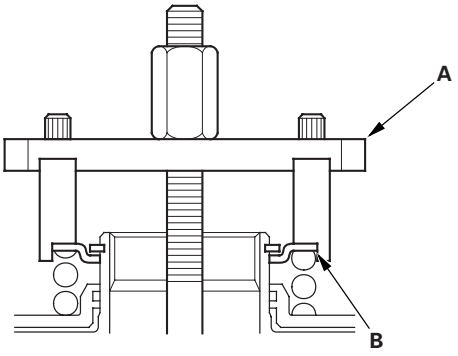

(cont'd)

Clutch Reassembly (cont'd)

9. If either end of the special tool is set over an area of the spring retainer which is unsupported by the return spring, the retainer may be damaged.

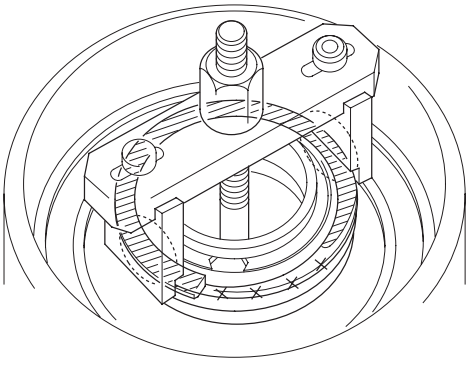

10. Compress the return spring.

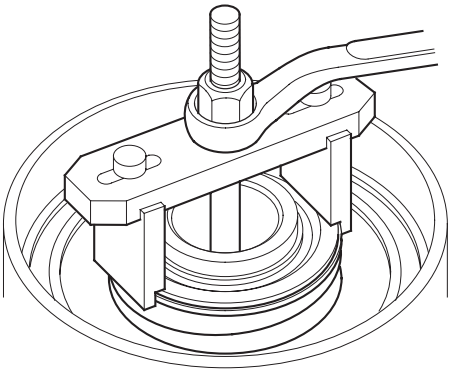

11. Install the snap ring with snap ring pliers.

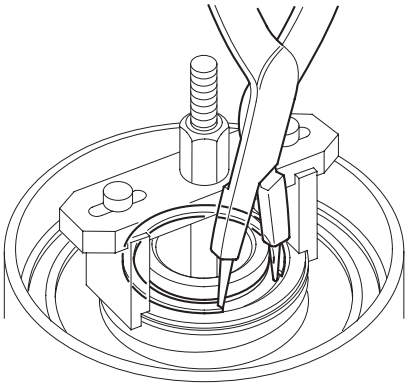

12. Remove the special tools.

13. Install the waved spring (A) in the 1st clutch drum (B). Starting with the clutch waved-plate, alternately install the clutch plate (C) (4) and discs (D) (4), then install the clutch end plate (E) with the flat side toward the disc.

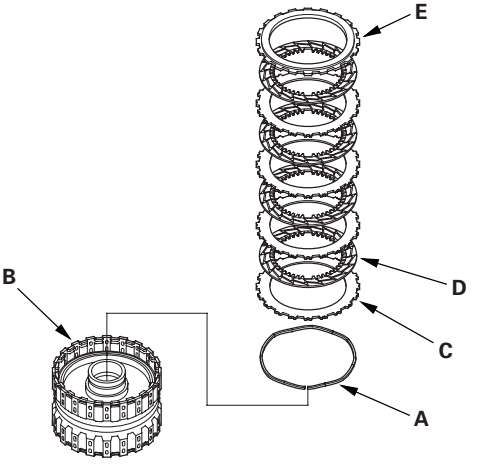

14. Install the waved spring (A) in the 2nd clutch drum (B). Install the clutch flat-plate (C), then starting with the clutch disc, alternately install the clutch disc (D) (4) and waved-plates (E) (3), then install the clutch end plate (F) with the flat side toward the disc.

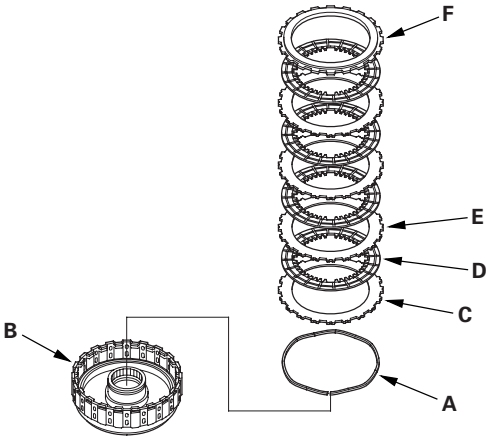

15. Install the waved spring (A) in the 3rd clutch drum (B). Install the clutch flat-plate (C), then starting with the clutch disc, alternately install the clutch disc (D) (4) and waved-plates (E) (3), then install the clutch end plate (F) with the flat side toward the disc.

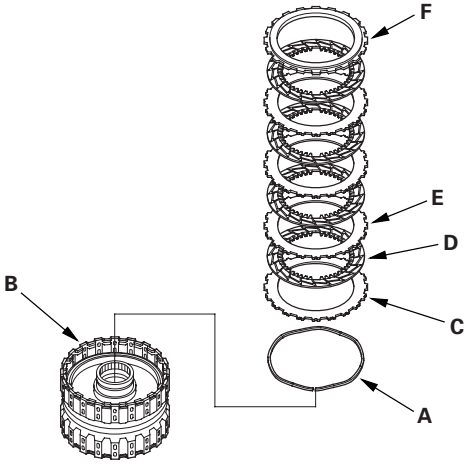

16. Install the waved spring (A) in the 4th clutch drum (B). Starting with the clutch waved-plate, alternately install the clutch plate (C) (3) and discs (D) (3), then install the clutch end plate (E) with the flat side toward the disc.

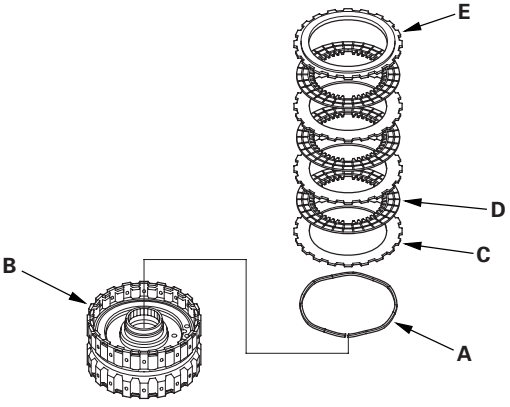

17. Install the waved spring (A) in the 5th clutch drum (B). Starting with the clutch waved-plate, alternately install the clutch plate (C) (3) and discs (D) (3), then install the clutch end plate (E) with the flat side toward the disc.

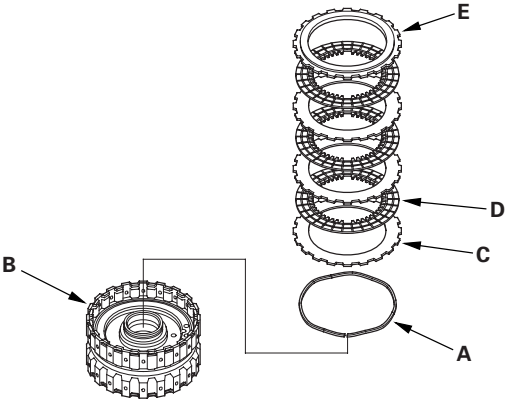

(cont'd)

Clutch Reassembly (cont'd)

18. Install the snap ring with a screwdriver.

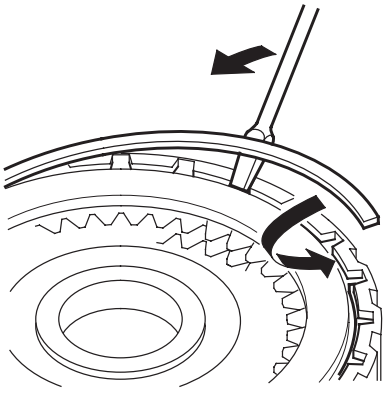

19. Check that the clutch piston moves by applying air pressure into fluid passage.

Valve Body and ATF Strainer Installation

Exploded View

Torque Specifications:
6 x 1.0 mm: 12 N·m (1.2 kgf·m, 8.7 lbf·ft)
8 x 1.25 mm: 18 N·m (1.8 kgf·m, 13 lbf·ft)

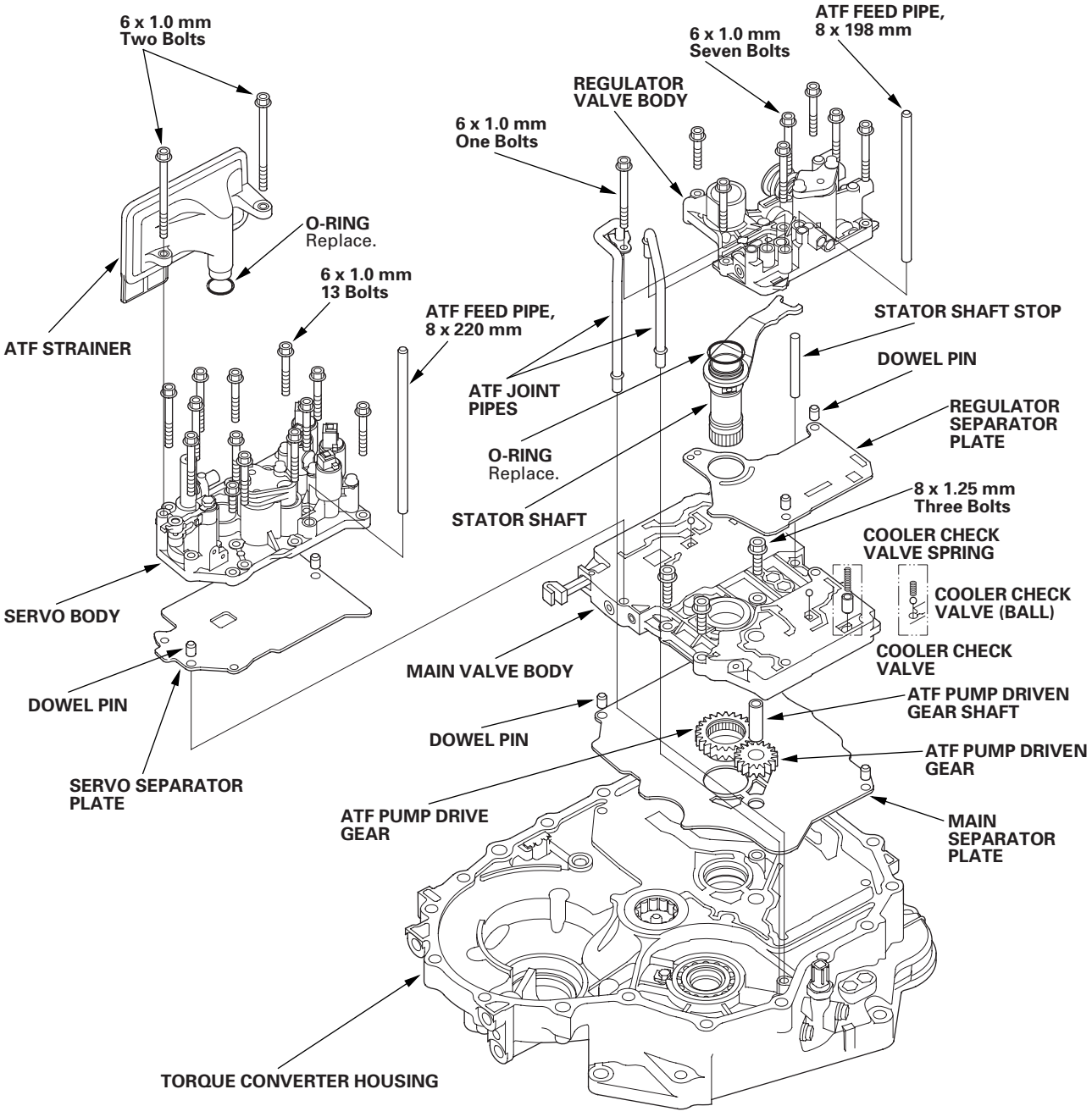

(cont'd)

Valve Body and ATF Strainer Installation (cont'd)

NOTE: Refer to the Exploded View as needed during the following procedure.

1. Install the main separator plate (A) and two dowel pins on the torque converter housing. Then install the ATF pump drive gear (B), driven gear (C), and ATF pump driven gear shaft (D). Install the ATF pump driven gear with its grooved and chamfered side facing down.

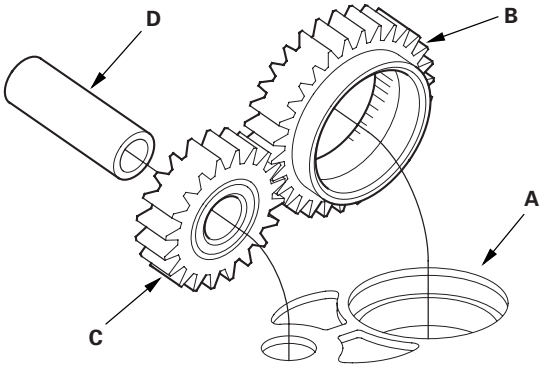

2. Install the main valve body.

3. Make sure the ATF pump drive gear (A) rotates smoothly in the normal operating direction, and the ATF pump driven gear shaft (B) moves smoothly in the axial and normal operating direction.

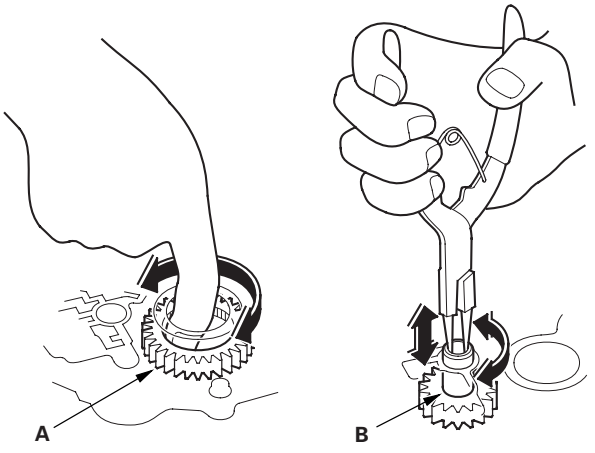

4. If the ATF pump drive gear and ATF pump driven gear shaft do not move smoothly, loosen the main valve body bolts. Realign the ATF pump driven gear shaft, and retighten the bolts to the specified torque, then recheck. Failure to align the ATF pump driven gear shaft correctly will result in a seized ATF pump drive gear or ATF pump driven gear shaft.

5. Make sure that the check balls (two) are in the main valve body, then install the cooler check valve and the cooler check valve spring.

   NOTE:
   - Cooler check valve (ball) applies to the 2002 model; transmission number 1000001-1006166.
   - Cooler check valve applies to the 2002 model; transmission number 1006167 or later, and 2003-2006 models.

6. Install the regulator separator plate and dowel pins (two) on the main valve body.

7. Install the stator shaft and stator shaft stop.

8. Install the regulator valve body (seven bolts).

9. Install the servo separator plate and dowel pins (two) on the main valve body.

10. Install the servo body (13 bolts).

11. Install the ATF strainer (two bolts).

12. Install the ATF joint pipes (one bolt).

13. Install the ATF feed pipes in the regulator valve body and servo body.

Shaft Assembly and Housing Installation

Exploded View

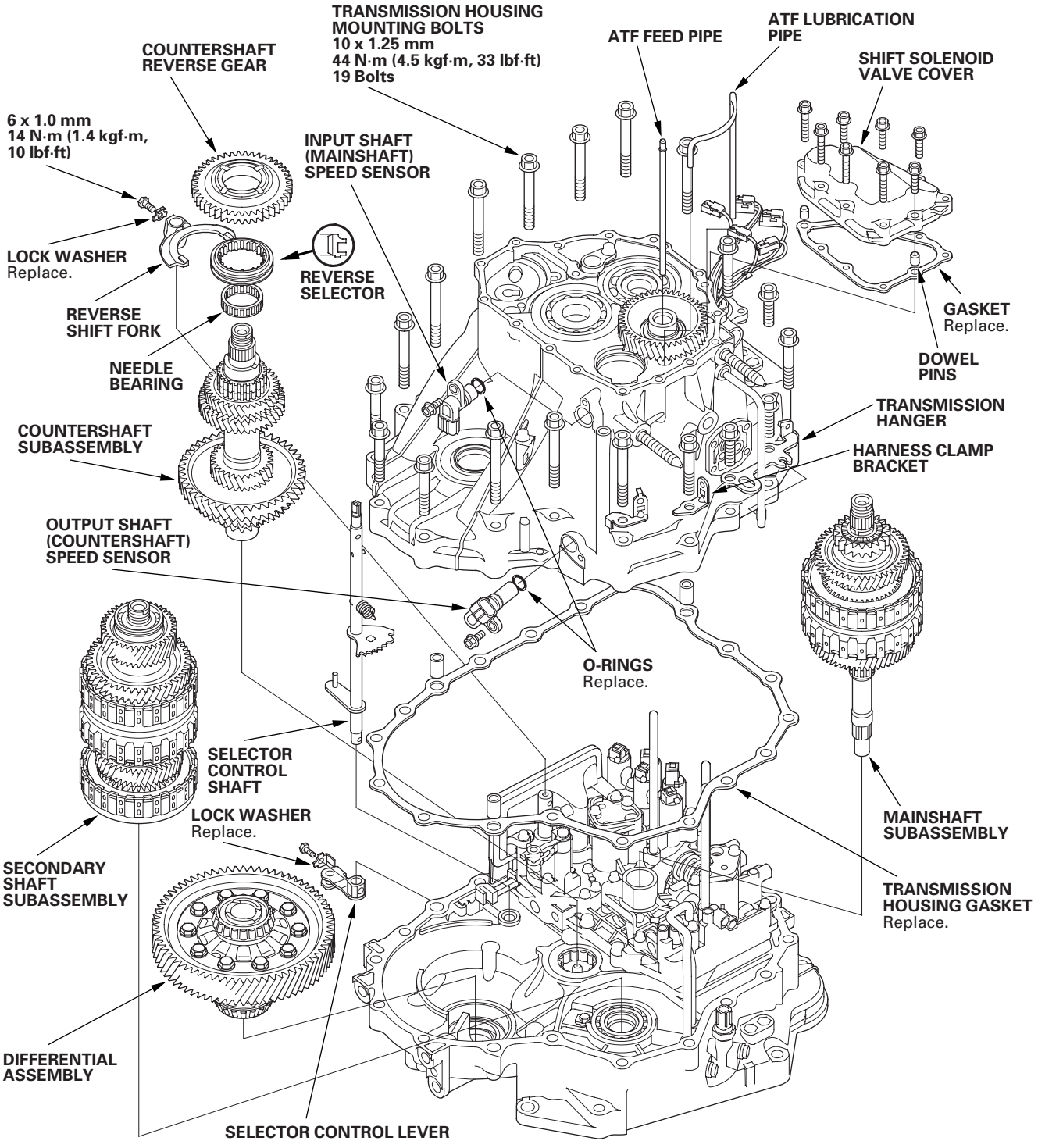

(cont'd)

Shaft Assembly and Housing Installation (cont'd)

NOTE: Refer to the Exploded View as needed during the following procedure.

1. Install the differential assembly in the torque converter housing.

2. Assemble the mainshaft, countershaft, and secondary shaft.

3. Join the mainshaft subassembly (A), countershaft subassembly (B), and secondary shaft subassembly (C) together, and install them in the torque converter housing.

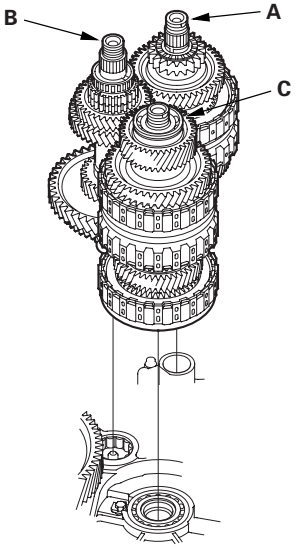

4. If the detent arm was removed, install the detent arm (A) with arm collar (B) on the servo body (C), and install the new lock washer (D) by aligning its cutout (E) with the projection (F) of the servo body. Install and tighten the bolt, then bend the lock tab of the lock washer against the bolt head.

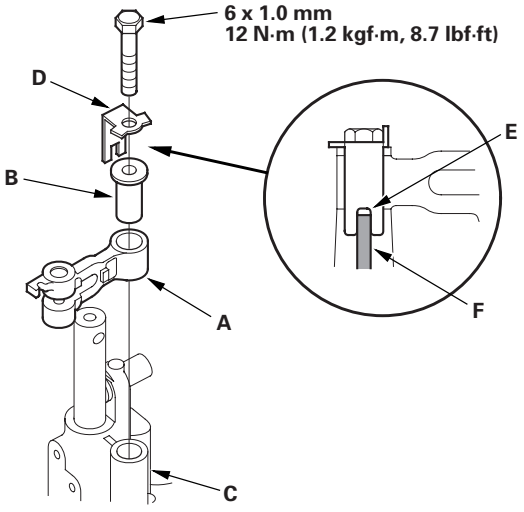

5. Install the selector control shaft (A) in the torque converter housing aligning the manual valve lever pin (B) on the control shaft with the guide of the manual valve (C). Pull the manual valve gently when aligning the manual valve with the selector control shaft.

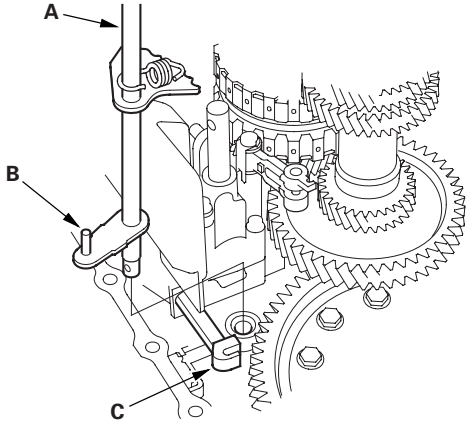

6. Hook the detent arm spring (A) to the detent arm (B).

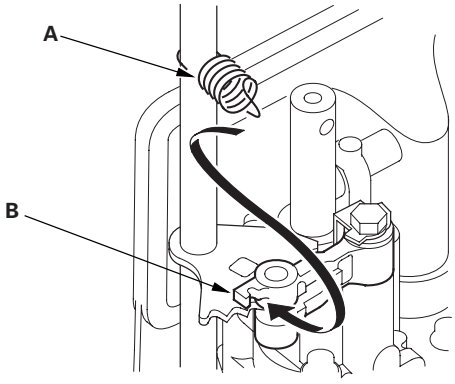

7. Turn the shift fork shaft (A) so the large chamfered hole (B) is facing the fork bolt hole (C) of the shift fork (D).

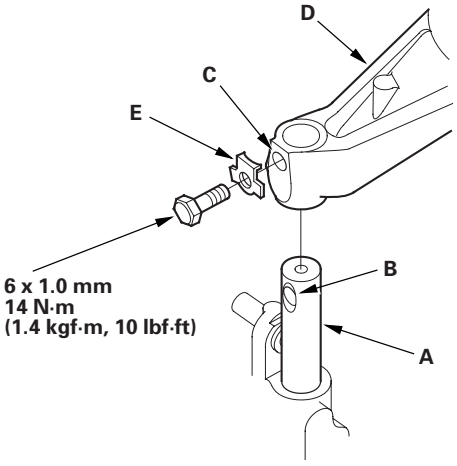

8. Install the shift fork and reverse selector together on the shift fork shaft and countershaft. Secure the shift fork to the shift fork shaft with the lock bolt and a new lock washer (E), then bend the lock tab of the lock washer against the bolt head.

9. Install the needle bearing and countershaft reverse gear on the countershaft.

10. Install the reverse idler gear in the transmission housing (see page 14-342).

11. Install the idler gear shaft (see page 14-371), if it was removed.

12. Install the three dowel pins and a new gasket on the torque converter housing.

(cont'd)

Shaft Assembly and Housing Installation (cont'd)

13. Align the spring pin (A) on the selector control shaft (B) with the transmission housing groove (C) by turning the control shaft.

    NOTE: Do not squeeze the end (D) of the selector control shaft tips together when turning the shaft. If the tips are squeezed together, it will cause a faulty signal or position due to the play between the selector control shaft and the switch.

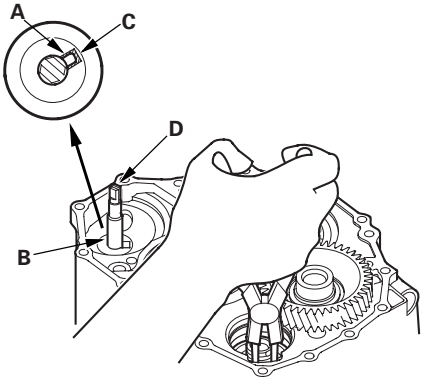

14. Place the transmission housing on the torque converter housing. Do not install the mainshaft and countershaft speed sensors before installing the transmission housing on the torque converter housing.

15. While expanding the snap ring of the secondary shaft bearing using the snap ring pliers, push the transmission housing down to start the secondary shaft bearing through the snap ring. Then release the pliers, and push down the housing until it bottoms and the snap ring snaps in place in the secondry shaft bearing snap ring groove.

16. Verify that the secondary shaft bearing snap ring (A) is seated in the bearing and housing groove, and that the ring end gap (B) is correct.

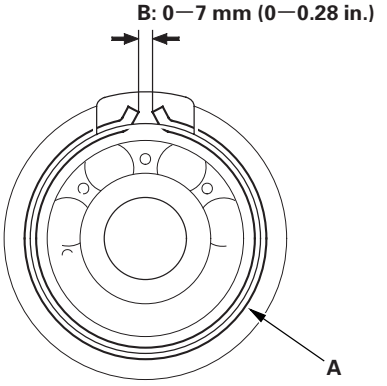

17. Install the transmission housing mounting bolts along with the transmission hanger (A) and harness clamp brackets (B), tighten the 19 bolts in two or three steps in a criss-cross pattern.

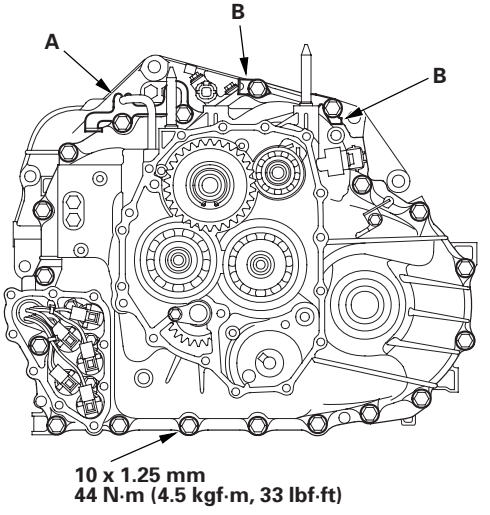

18. Install the input shaft (mainshaft) speed sensor (A) and output shaft (countershaft) speed sensor (B) with new O-rings (C).

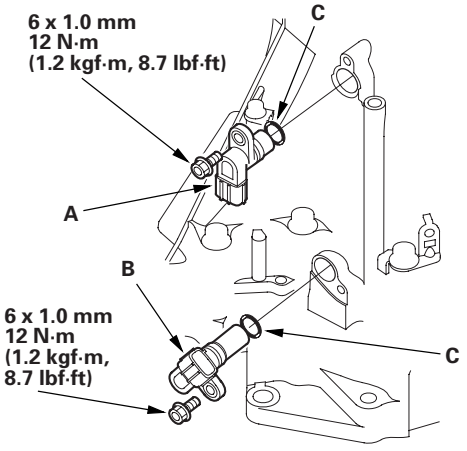

19. Install the shift solenoid harness connector (F) in the transmission housing with the new O-ring (G).

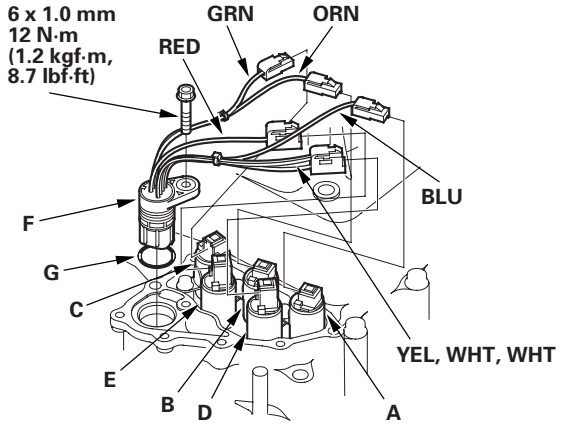

20. Connect the connector (YEL, WHT, and WHT wires) to the shift solenoid valve D.

21. Connect the connectors to respective solenoid valves:

- BLU wire to shift solenoid valve A.
- ORN wire to shift solenoid valve B.
- GRN wire to shift solenoid valve C.
- RED wire to shift solenoid valve E.

22. Install the shift solenoid valve cover (A) with the two dowel pins (B) and the new gasket (C), and tighten the bolts (eight). Install the one bolt with the bracket for the ATF cooler line in the bolt hole (D) in End Cover Installation (see step 34 on page 14-399).

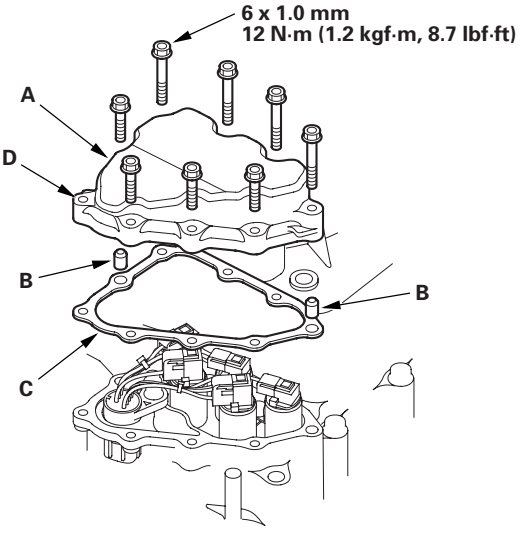

End Cover Installation

Special Tools Required
Mainshaft holder 07GAB-PF50101 or 07GAB-PF50100

1. Install the special tool onto the mainshaft.

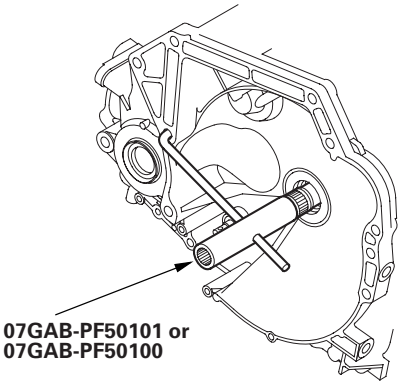

2. Lubricate the following parts with ATF:

   - Splines and threads of the mainshaft.
   - Splines of the mainshaft idler gear.
   - Old conical spring washer and old locknut.

3. Install the mainshaft idler gear (A), old conical spring washer (B), and old locknut (C) on the mainshaft (D), and tighten the locknut to 226 N·m (23.0 kgf·m, 166 lbf·ft).

   NOTE:
   - Do not tap the idler gear to install.
   - Use a torque wrench to tighten the locknut. Do not use an impact wrench.

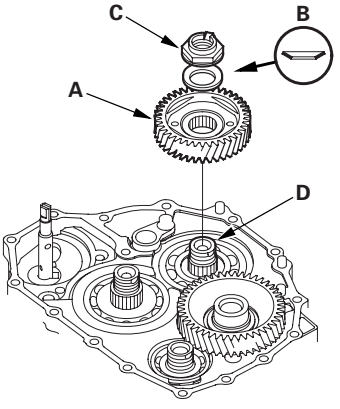

4. Install the park lever (A) and park lever stop (B) on the selector control shaft (C), then install the lock bolt with the new lock washer (D). Do not bend the lock tab of the lock washer until step 18.

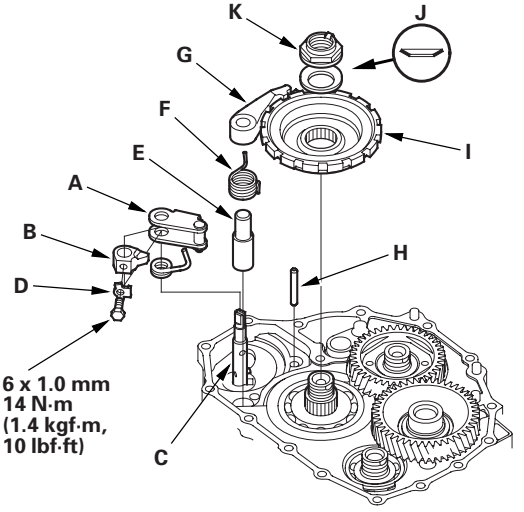

5. Install the park pawl shaft (E), park pawl spring (F), park pawl (G), and stop shaft (H) on the transmission housing.

6. Lubricate the following parts with ATF:

   - Threads and splines of the countershaft.
   - Old conical spring washer and old locknut.
   - Areas where the park gear contacts the conical spring washer.

7. Install the park gear (I), old conical spring washer (J), and old locknut (K) on the countershaft.

8. Lift the park pawl up, and engage it with the park gear, then tighten the locknut to 226 N·m (23.0 kgf·m, 166 lbf·ft).

   NOTE:
   - Do not tap the park gear to install.
   - Use a torque wrench to tighten the locknut. Do not use an impact wrench.
   - Countershaft locknut has left-hand threads.

9. Remove the locknuts and conical spring washers from the mainshaft and countershaft.

10. Lubricate the threads of the shafts, the new locknuts, and the new conical spring washers with ATF.

11. Install the new conical spring washers (A) with facing stamped mark side up in the direction shown, and install the new mainshaft locknut (B), the new countershaft locknut (C), and the new secondary shaft locknut (D).

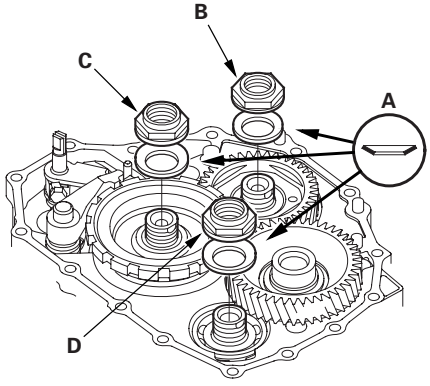

12. Tighten the locknuts to 167 N·m (17.0 kgf·m, 123 lbf·ft).

    NOTE:
    - Be sure to install the conical spring washers in the direction shown.
    - Use a torque wrench to tighten the locknut. Do not use an impact wrench.
    - Countershaft and secondary shaft locknuts have left-hand threads.

13. Remove the special tool from the mainshaft.

14. Stake the locknuts into the shafts with a punch.

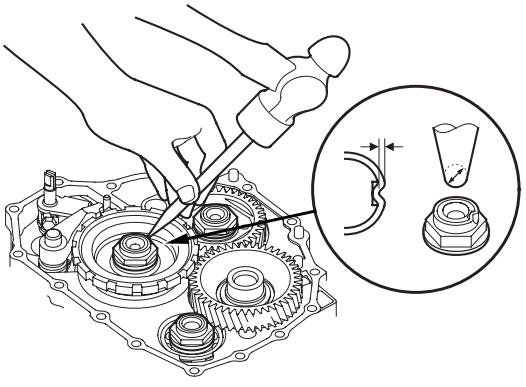

15. Install the selector control lever (A) on the selector control shaft (B), and install the bolt with the new lock washer (C), then bend the lock tab of the lock washer against the bolt head.

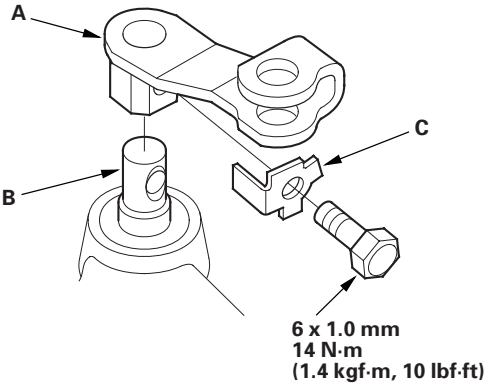

16. Set the park lever in the P position, then verify that the park pawl (A) engages the park gear (B).

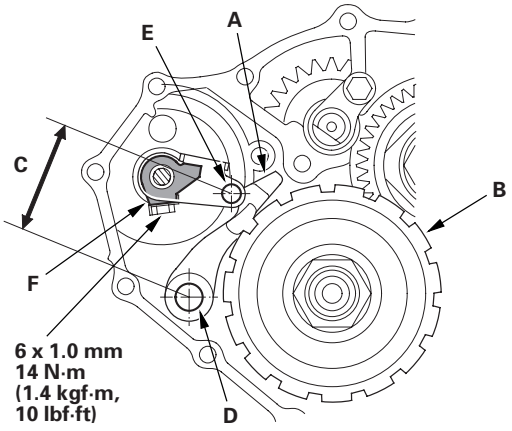

17. If the park pawl does not engage fully, check the distance (C) between the pawl shaft (D) and the park lever roller pin (E) (see page 14-334).

18. Tighten the lock bolt, and bend the lock tab of the lock washer (F) against the bolt head.

(cont'd)

End Cover Installation (cont'd)

19. Install the ATF feed pipe (A) into the idler gear shaft, and install the ATF lubrication pipe (B) into the transmission housing.

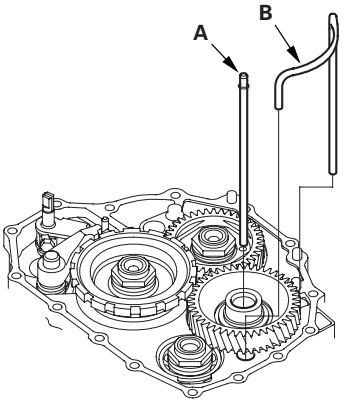

20. Install the end cover:

- 2002 model (transmission number 1000001-1006166)

–1 Install the new gasket (A) on the transmission housing, and install the two dowel pins (B) and new O-rings (C) over the top of the ATF feed pipes.

–2 Install the end cover (D) with the 6 x 1.0 mm bolts (15 bolts) and harness clamp bracket (E).

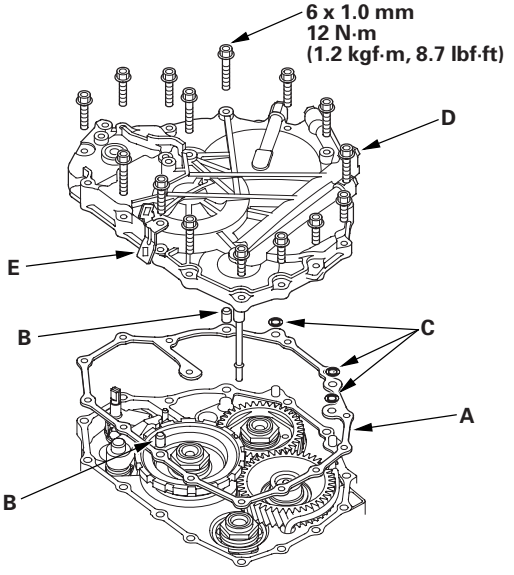

21. Install the end cover:

- 2002 model (transmission number 1006167 or later), and 2003-2006 models

–1 Install the new gasket (A) on the transmission housing, and install the two dowel pins (B) and new O-rings (C) over the top of the ATF feed pipes.

–2 Install the end cover (D), and tighten the three special bolts (E) and the 6 x 1.0 mm bolts (12 bolts).

–3 Install the harness clamp bracket (F) on the end cover.

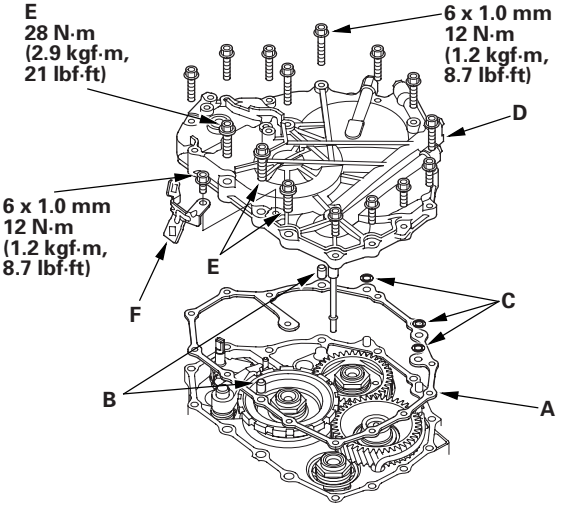

22. Set the selector control shaft (A) to the N position by turning the selector control lever on the torque converter side.

    NOTE: Do not squeeze the end of the selector control shaft tips together when turning the shaft. If the tips are squeezed together it will cause a faulty shift position signal or position due to the play between the selector control shaft and the switch.

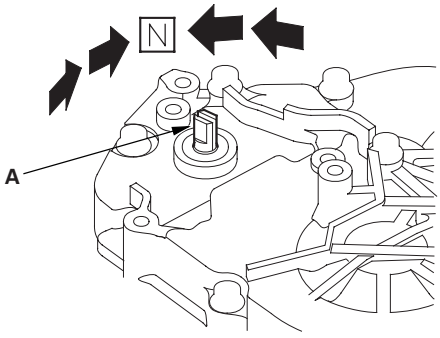

23. Align the cutouts (A) on the rotary-frame with the neutral positioning cutouts (B) on the transmission range switch (C), then put a 2.0 mm (0.08 in.) feeler gauge blade (D) in the cutouts to hold in the N position.

    NOTE: Be sure to use a 2.0 mm (0.08 in.) blade or equivalent to hold the switch in the N position.

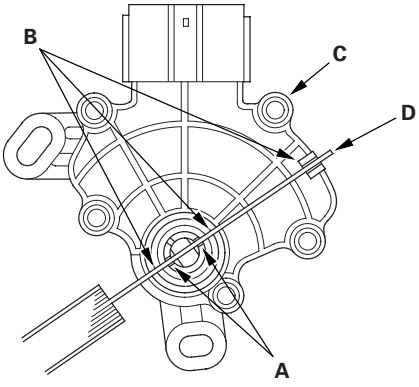

24. Install the transmission range switch (A) gently on the selector control shaft (B) with holding it in the N position with the 2.0 mm (0.08 in.) blade (C).

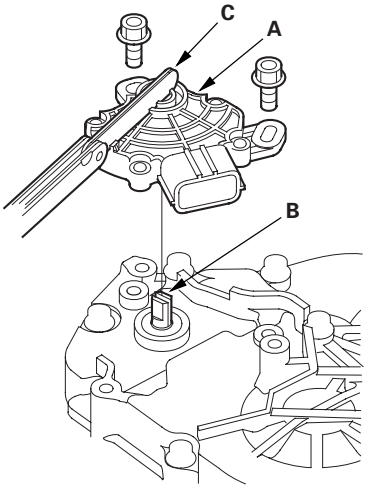

25. Tighten the bolts on the transmission range switch while you continue to hold it in the N position. Do not move the transmission range switch when tightening the bolts. Remove the feeler gauge.

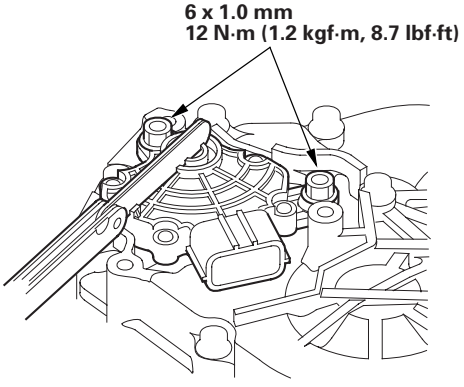

(cont'd)

End Cover Installation (cont'd)

26. Connect the transmission range switch connector (A) securely, then install the harness clamps (B) on the clamp bracket (C).

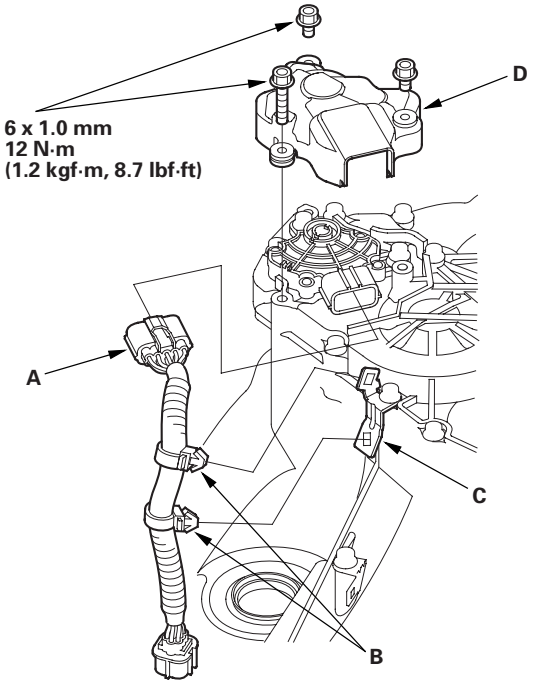

27. Install the transmission range switch cover (D).

28. Install the new gasket (A) on the transmission housing, and install the ATF pipe (B) and ATF joint pipes (C).

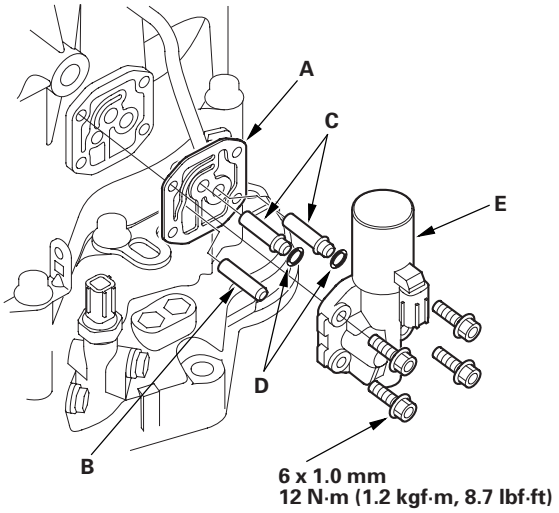

29. Install the new O-rings (D) over the ATF joint pipes.

30. Install the A/T clutch pressure control solenoid valve A (E).

31. Install the new gasket (A) on the transmission housing, and install the ATF joint pipes (D).

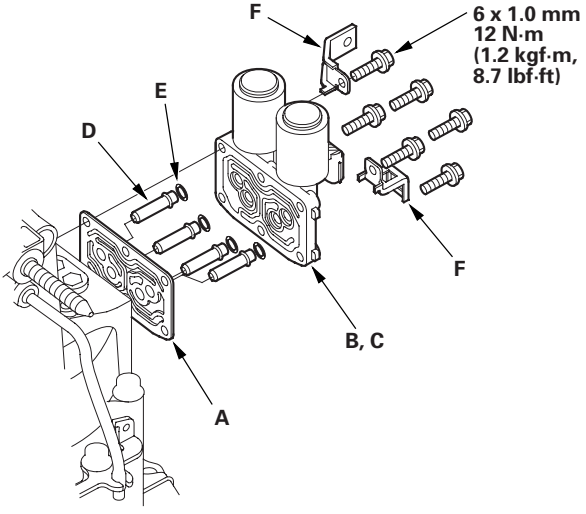

32. Install the new O-rings (E) over the ATF joint pipes.

33. Install the A/T clutch pressure control solenoid valves B and C, and harness clamp brackets (F).

34. Install the ATF cooler inlet line (A) with the new sealing washers (B), and install the bracket (C) of the ATF cooler inlet line on the shift solenoid valve cover hole (D) in Shaft Assembly and Housing Installation (see step 22 on page 14-393).

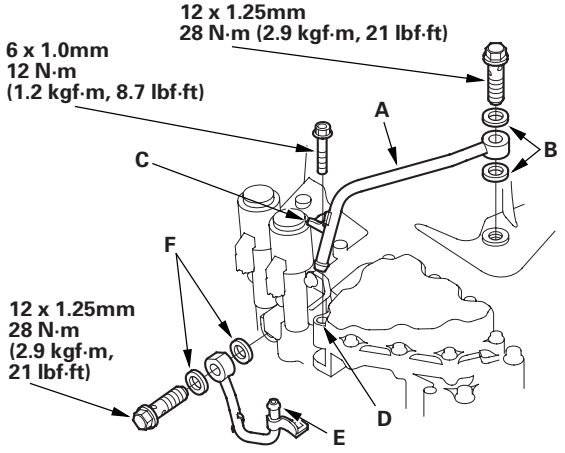

35. Install the ATF cooler outlet line (E) with the new sealing washers (F).

36. Install the breather tube (A) with facing the dot (B) on the tube in a rearward position (differential side), then install the other end (C) in the slot (D) of the transmission hanger (E).

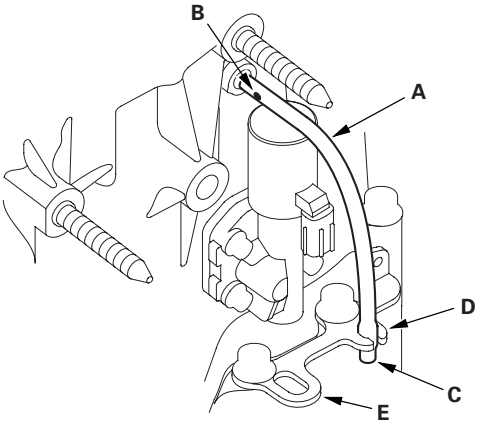

37. Install the ATF dipstick.

Component Location Index

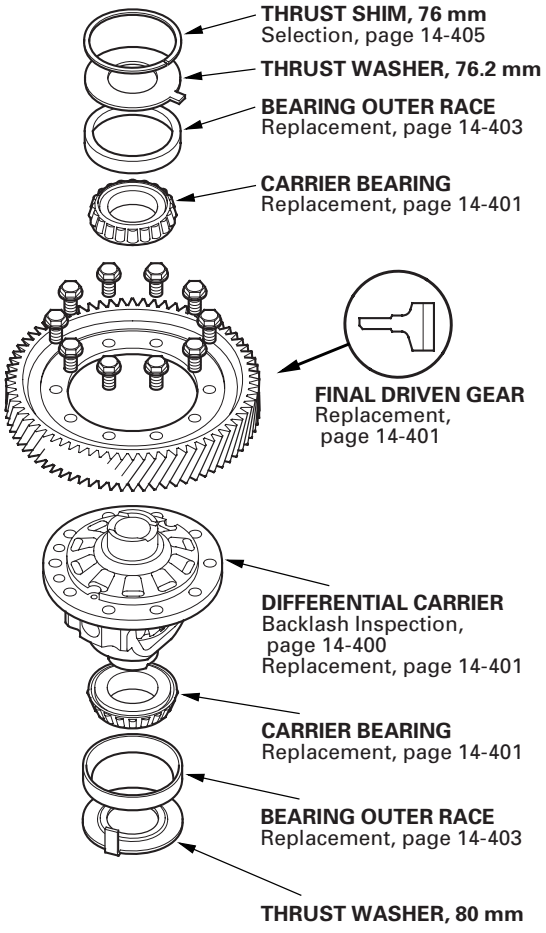

Backlash Inspection

1. Install the driveshaft and intermediate shaft on the differential, then place the axles on V-blocks.

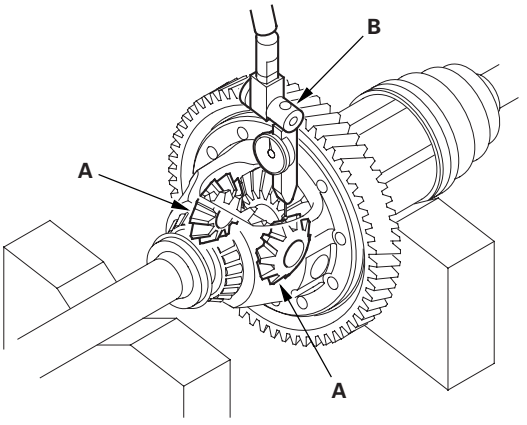

2. Check the backlash of the pinion gears (A) with a dial indicator (B).

   Standard: 0.05—0.15 mm (0.002—0.006 in.)

3. If the backlash is out of standard, replace the differential carrier.

Carrier Bearing Replacement

Special Tools Required
Attachment, 40 x 50 mm 07LAD-PW50601

NOTE:
- The bearing and bearing outer race should be replaced as a set.
- Inspect and adjust the carrier bearing preload whenever bearing is replaced.
- Check the bearing for wear and rough rotation. If the bearing is OK, removal is not necessary.

1. Remove the carrier bearing (A) with a commercially available puller (B), bearing separator (C), and stopper adapter (D).

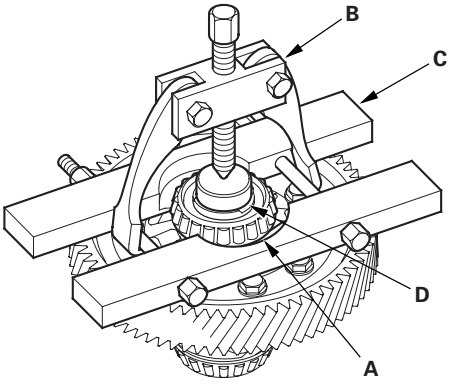

2. Install the new bearings with the special tool using the small end and a press until it bottoms. Press the bearing on securely so there is no clearance between the bearing and the differential carrier.

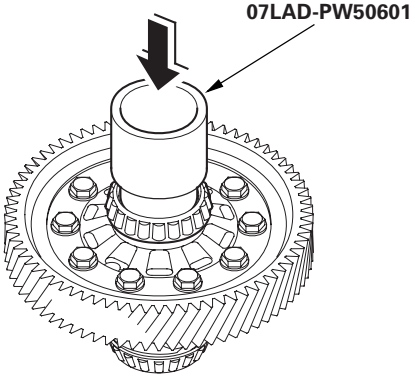

Differential Carrier, Final Driven Gear Replacement

1. Remove the final driven gear from the differential carrier, and replace the differential carrier or final driven gear.

2. Install the final driven gear (A) in the direction shown on the differential carrier (B).

   NOTE: Differential carrier bolts have left-hand threads.

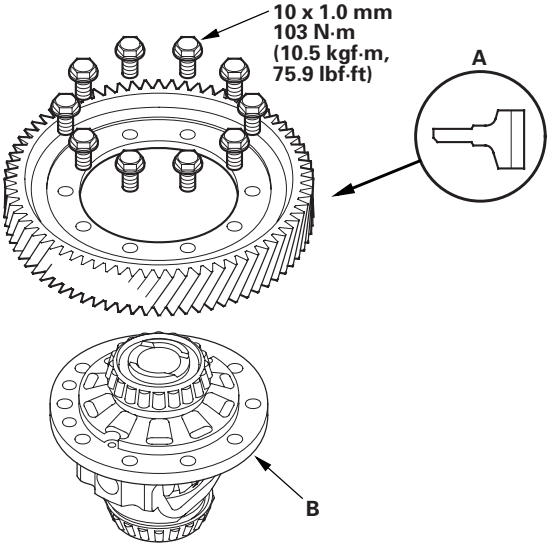

Oil Seal Replacement

Special Tools Required
- Driver 07749-0010000
- Oil seal driver attachment 07947-SD90101
- Oil seal driver attachment 07JAD-PH80101

1. Remove the oil seal from the transmission housing.

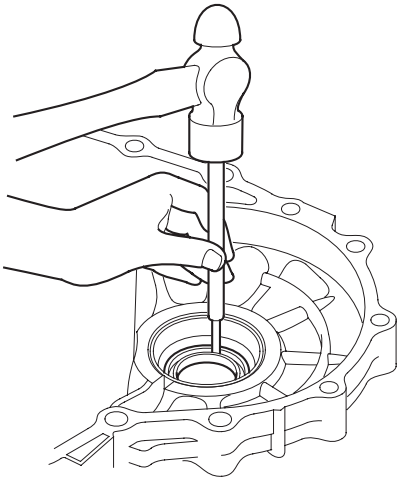

2. Remove the oil seal from the torque converter housing.

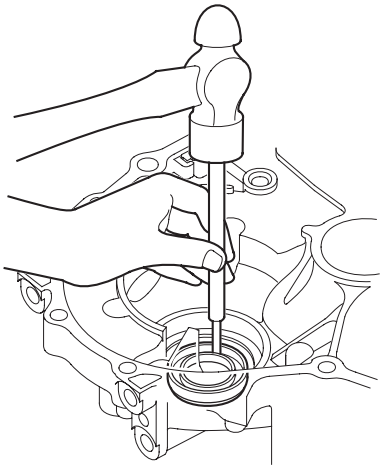

3. Install the new oil seal (A) in the transmission housing with the special tools.

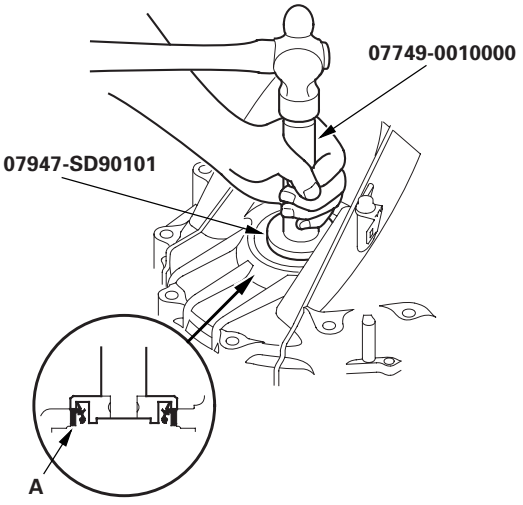

4. Install the new oil seal (A) in the torque converter housing with the special tools.

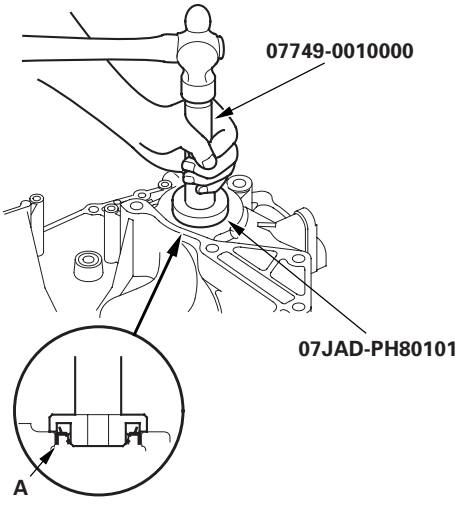

Carrier Bearing Outer Race Replacement

Special Tools Required
- Driver 07749-0010000
- Attachment, 78 x 90 mm 07GAD-SD40101
- Attachment, 72 x 75 mm 07746-0010600

NOTE:
- The bearing and bearing outer race should be replaced as a set.
- Replace the bearing with a new one whenever the outer race is replaced.
- Do not use the thrust shim on the torque converter housing.
- Adjust bearing preload after replacing the bearing and outer race.
- Coat all parts with ATF during installation.

1. Remove the bearing outer race (A), 76.2 mm thrust washer (B), and 76 mm thrust shim (C) from the transmission housing (D) by heating the housing to about 212 ℉ (100 ℃) with heat gun (E). Do not heat the housing in excess of 212 ℉ (100 ℃).

   NOTE: Let the transmission housing cool to room temperature before installing the bearing outer race.

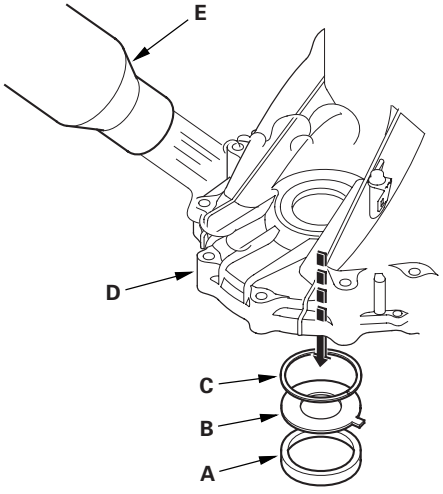

2. Remove the bearing outer race (A) and 80 mm thrust washer (B) from the torque converter housing (C).

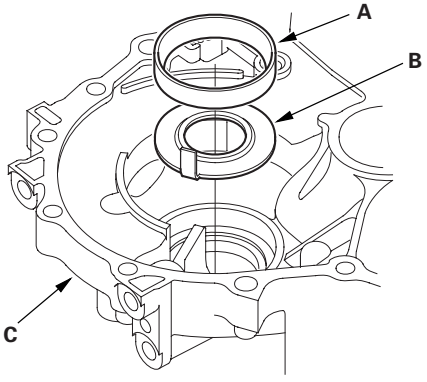

3. Install the 80 mm thrust washer and the new bearing outer race in the torque converter housing.

4. Drive the bearing outer race to install securely in the housing with the special tools.

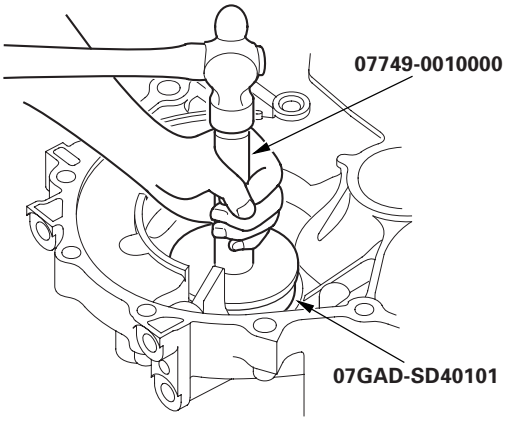

(cont'd)

Carrier Bearing Outer Race Replacement (cont'd)

5. Install the 76 mm thrust shim (A), 76.2 mm thrust washer (B), and the new bearing outer race (C) in the transmission housing (D).

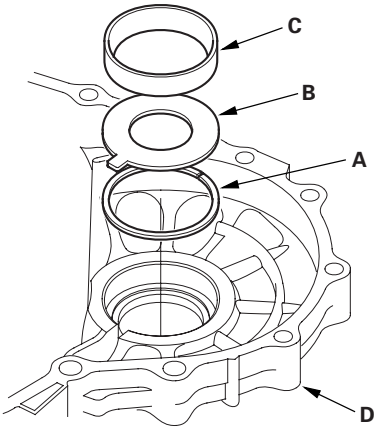

6. Drive the bearing outer race in securely so there is no clearance between the outer race, thrust washer, shim, and housing with the special tools.

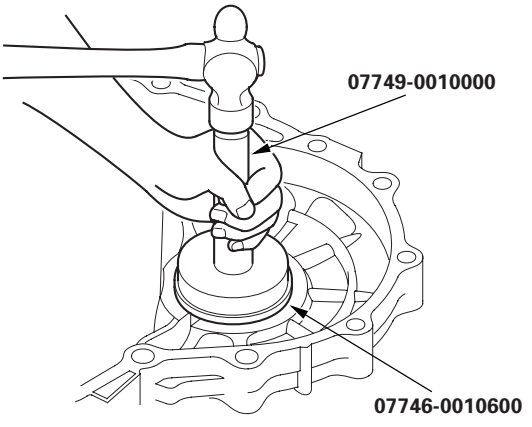

Carrier Bearing Preload Inspection

Special Tools Required
- Driver 07749-0010000
- Attachment, 72 x 75 mm 07746-0010600
- Preload inspection tool 07HAJ-PK40201

NOTE:
- If the transmission housing, torque converter housing, differential carrier, carrier bearing and outer race, or thrust shim were replaced, the bearing preload must be adjusted.
- Coat all parts with ATF during installation.
- Do not use the thrust shim in the torque converter housing.

1. Remove the bearing outer race (A), 76.2 mm thrust washer (B), and 76 mm thrust shim (C) from the transmission housing (D) by heating the housing to about 212 ℉ (100 ℃) with heat gun (E). Do not heat the housing in excess of 212 ℉ (100 ℃).

   NOTE: Let the transmission housing cool to room temperature before adjusting the bearing preload.

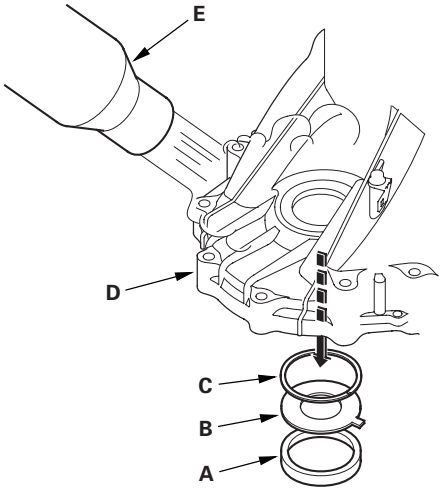

2. Install the 76 mm thrust shim of 2.6 mm (0.102 in.) in thickness (P/N 41449-PK4-000) (A) in the transmission housing (B).

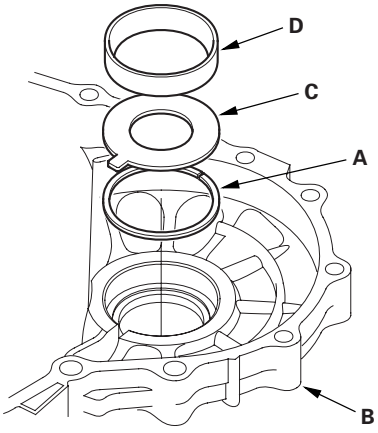

3. Install the 76.2 mm thrust washer (C) and the bearing outer race (D) in the transmission housing.

4. Drive the bearing outer race in securely so there is no clearance between the outer race, thrust washer, shim, and housing with the special tools.

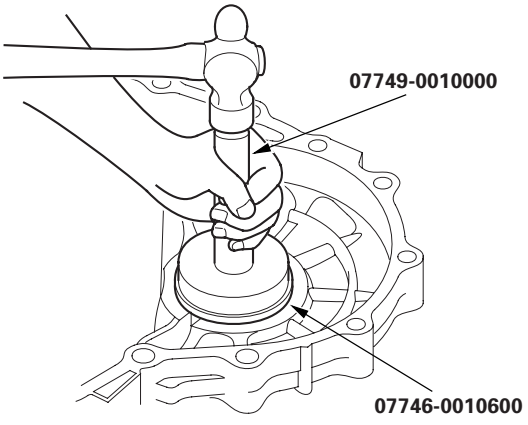

(cont'd)

Carrier Bearing Preload Inspection (cont'd)

5. Install the differential assembly (A) in the torque converter housing (B), and install the gasket (C) and dowel pins (D) on the housing.

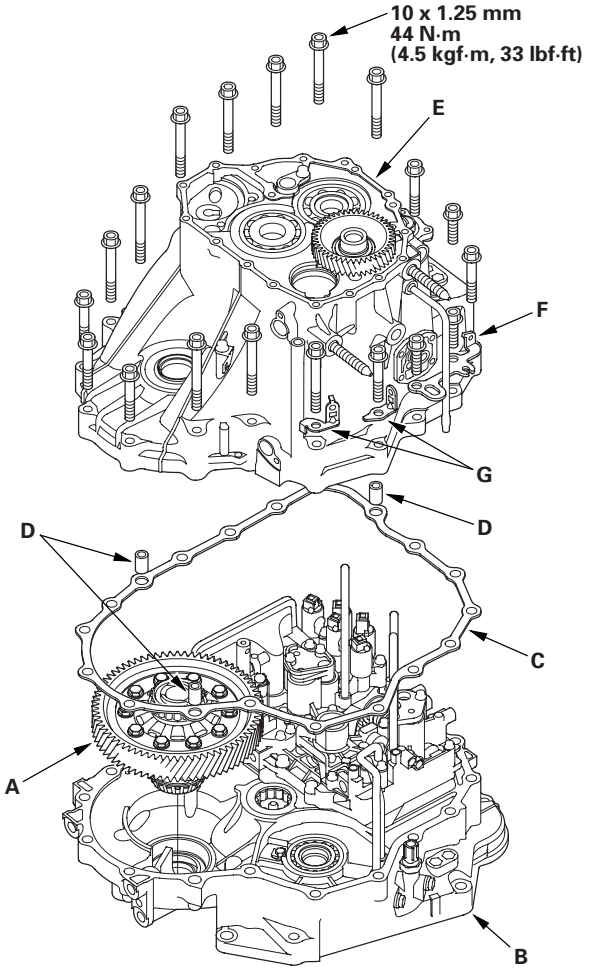

6. Install the transmission housing (E) with the transmission hanger (F) and harness clamp brackets (G), then tighten the bolts.

7. Rotate the differential assembly in both directions to seat the bearings.

8. Measure the starting torque of the differential assembly in both directions with the special tool, a torque wrench (A), and socket (B). Measure the starting torque at normal room temperature.

Standard

New Bearing:	**2.7—3.7 N·m (28—40 kgf·cm, 22—32 lbf·in.)**
Reused Bearing:	**2.5—3.6 N·m (25—37 kgf·cm, 22—32 lbf·in.)**

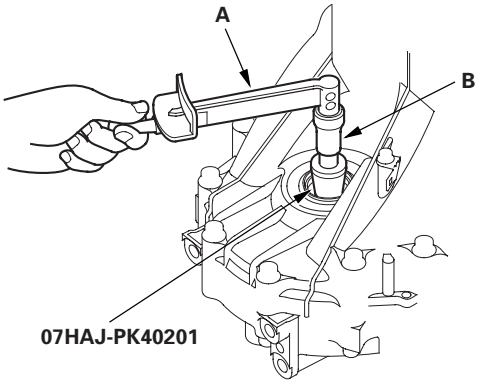

9. If the measurement is out of standard, remove the thrust shim and select the thrust shim from the table. Install the new thrust shim and recheck. To increase the starting torque, increase the thickness of the thrust shim. To decrease the starting torque, decrease the thickness of the shim. Changing the thickness of shim by 0.05 mm will increase or decrease starting torque about 0.3—0.4 N·m (3—4 kgf·cm, 2—3 lbf·in).

THRUST SHIM, 76 mm

No.	Part Number	Thickness
S	41438-PX4-700	2.05 mm (0.081 in.)
T	41439-PX4-700	2.10 mm (0.083 in.)
U	41440-PX4-700	2.15 mm (0.085 in.)
A	41441-PK4-000	2.20 mm (0.087 in.)
B	41442-PK4-000	2.25 mm (0.089 in.)
C	41443-PK4-000	2.30 mm (0.091 in.)
D	41444-PK4-000	2.35 mm (0.093 in.)
E	41445-PK4-000	2.40 mm (0.094 in.)
F	41446-PK4-000	2.45 mm (0.096 in.)
G	41447-PK4-000	2.50 mm (0.098 in.)
H	41448-PK4-000	2.55 mm (0.100 in.)
I	41449-PK4-000	2.60 mm (0.102 in.)
J	41450-PK4-000	2.65 mm (0.104 in.)
K	41451-PK4-000	2.70 mm (0.106 in.)
L	41452-PK4-000	2.75 mm (0.108 in.)
M	41453-PK4-000	2.80 mm (0.110 in.)
N	41454-PK4-000	2.85 mm (0.112 in.)
O	41455-PK4-000	2.90 mm (0.114 in.)
P	41456-PK4-000	2.95 mm (0.116 in.)
Q	41457-PK4-000	3.00 mm (0.118 in.)
R	41458-PK4-000	3.05 mm (0.120 in.)
0A	41428-PRP-000	1.55 mm (0.061 in.)
0B	41429-PRP-000	1.60 mm (0.063 in.)
0C	41430-PRP-000	1.65 mm (0.065 in.)
0D	41431-PRP-000	1.70 mm (0.067 in.)
0E	41432-PRP-000	1.75 mm (0.069 in.)
0F	41433-PRP-000	1.80 mm (0.071 in.)
0G	41434-PRP-000	1.85 mm (0.073 in.)
0H	41435-PRP-000	1.90 mm (0.075 in.)
0I	41436-PRP-000	1.95 mm (0.077 in.)
0J	41437-PRP-000	2.00 mm (0.079 in.)

(cont'd)

THRUST SHIM, 76 mm (cont'd)

No.	Part Number	Thickness
A	41428-PAX-000	1.575 mm (0.062 in.)
B	41429-PAX-000	1.625 mm (0.064 in.)
C	41430-PAX-000	1.675 mm (0.066 in.)
D	41431-PAX-000	1.725 mm (0.068 in.)
E	41432-PAX-000	1.775 mm (0.070 in.)
F	41433-PAX-000	1.825 mm (0.072 in.)
G	41434-PAX-000	1.875 mm (0.074 in.)
H	41435-PAX-000	1.925 mm (0.076 in.)
I	41436-PAX-000	1.975 mm (0.078 in.)
J	41437-PAX-000	2.025 mm (0.080 in.)
K	41438-PAX-000	2.075 mm (0.082 in.)
L	41439-PAX-000	2.125 mm (0.084 in.)
M	41440-PAX-000	2.175 mm (0.086 in.)
N	41441-PAX-000	2.225 mm (0.088 in.)
O	41442-PAX-000	2.275 mm (0.090 in.)
P	41443-PAX-000	2.325 mm (0.092 in.)
Q	41444-PAX-000	2.375 mm (0.094 in.)
R	41445-PAX-000	2.425 mm (0.095 in.)
S	41446-PAX-000	2.475 mm (0.097 in.)
T	41447-PAX-000	2.525 mm (0.099 in.)
U	41448-PAX-000	2.575 mm (0.101 in.)
V	41449-PAX-000	2.625 mm (0.103 in.)
W	41450-PAX-000	2.675 mm (0.105 in.)
X	41451-PAX-000	2.725 mm (0.107 in.)
Y	41452-PAX-000	2.775 mm (0.109 in.)
Z	41453-PAX-000	2.825 mm (0.111 in.)
0A	41454-PAX-000	2.875 mm (0.113 in.)
0B	41455-PAX-000	2.925 mm (0.115 in.)
0C	41456-PAX-000	2.975 mm (0.117 in.)
0D	41457-PAX-000	3.025 mm (0.119 in.)

Driveline/Axle

Special Tools 16-2
Component Location Index 16-3
Driveshaft Inspection 16-4
Driveshaft Removal 16-4
Driveshaft Disassembly 16-6
Driveshaft Reassembly 16-10
Driveshaft Installation 16-17
Intermediate Shaft Removal 16-19
Intermediate Shaft Disassembly 16-20
Intermediate Shaft Reassembly 16-22
Intermediate Shaft Installation 16-24

Special Tools

Ref. No.	Tool Number	Description	Qty
①	07GAD-PH70201	Oil Seal Driver	1
②	07NAF-SR30101	Half Shaft Base	1
③	07XAC-001010A	Threaded Adapter, 22 x 1.5 mm	1
④	07XAC-001020A	Threaded Adapter, 24 x 1.5 mm	1
⑤	07746-0010400	Attachment, 52 x 55 mm	1
⑥	07746-0030400	Attachment, 35 mm I.D.	1
⑦	07947-SB00100	Oil Seal Driver	1
⑧	07749-0010000	Driver	1

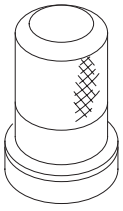

①

②

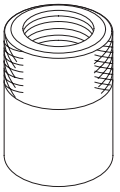

③, ④

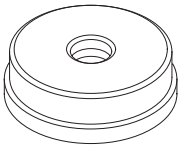

⑤

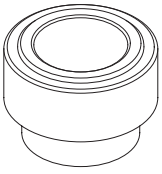

⑥

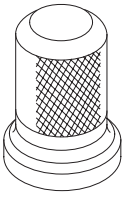

⑦

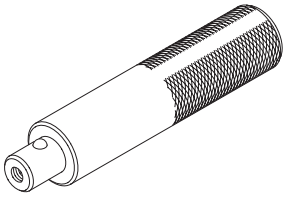

⑧

Component Location Index

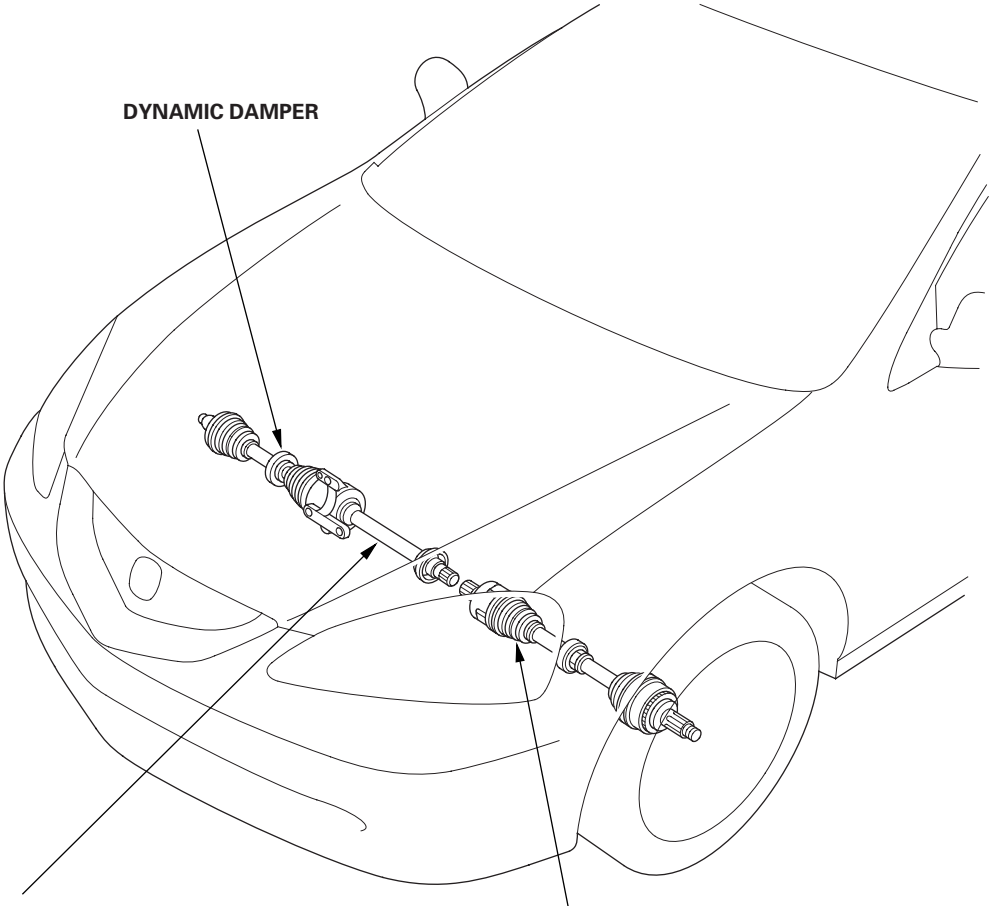

INTERMEDIATE SHAFT
Removal, page 16-19
Disassembly, page 16-20
Reassembly, page 16-22
Installation, page 16-24

DRIVESHAFT
Inspection, page 16-4
Removal, page 16-4
Disassembly, page 16-6
Reassembly, page 16-10
Installation, page 16-17

Driveshaft Inspection

1. Check the inboard boot (A) and the outboard boot (B) on the driveshaft (C) for cracks, damage, leaking grease, and loose boot bands (D). If any damage is found, replace the boot and boot bands.

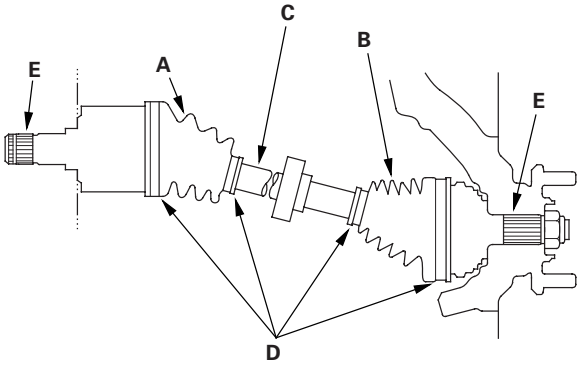

2. Turn the driveshaft by hand, and make sure the splines (E) and joint are not excessively loose.

3. Make sure the driveshaft is not twisted, bent, or cracked; if it is, replace it.

Driveshaft Removal

1. Loosen the wheel nuts slightly.

2. Raise the front of the vehicle, and support it with safety stands in the proper locations (see page 1-12).

3. Remove the wheel nuts and front wheels.

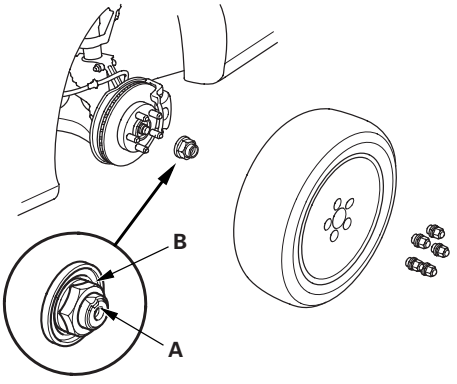

4. Lift up the locking tab (A) on the spindle nut (B), then remove the nut.

5. Drain the transmission fluid. Reinstall the drain plug using a new washer:

   - Manual transmission (see page 13-4)
   - Automatic transmission (see page 14-272)

6. Hold the stabilizer ball joint pin (A) with a hex wrench (B), and remove the flange nut (C). Separate the front stabilizer link (D) from the lower arm.

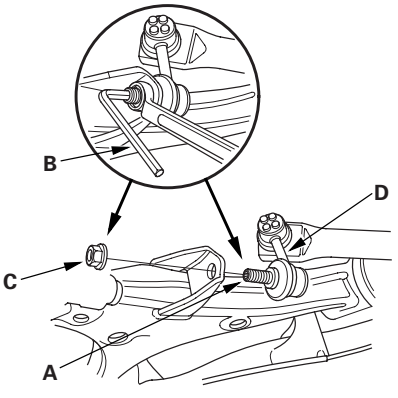

7. Remove the lock pin from the lower arm ball joint castle nut, and remove the nut, then separate the ball joint from the lower arm with the ball joint thread protector and remover (see step 10 on page 18-13).

   NOTE:
   - To avoid damaging the ball joint, install the ball joint thread protector onto the threads of the ball joint.
   - Be careful not to damage the ball joint boot when installing the remover.

8. Pull the knuckle outward, and remove the driveshaft outboard joint from the front wheel hub using a plastic hammer.

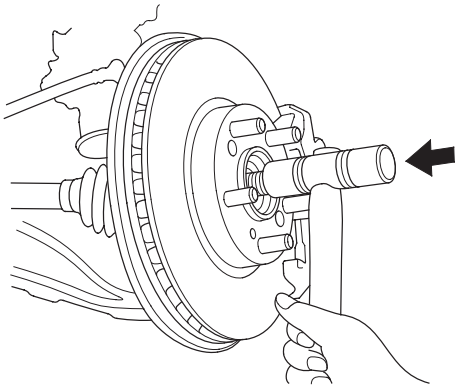

9. Left driveshaft: Pry the inboard joint (A) from the transmission housing with a prybar. Remove the driveshaft as an assembly.

   NOTE: Do not pull on the driveshaft (B) or the inboard joint may come apart. Pull the driveshaft straight out to avoid damaging the oil seal.

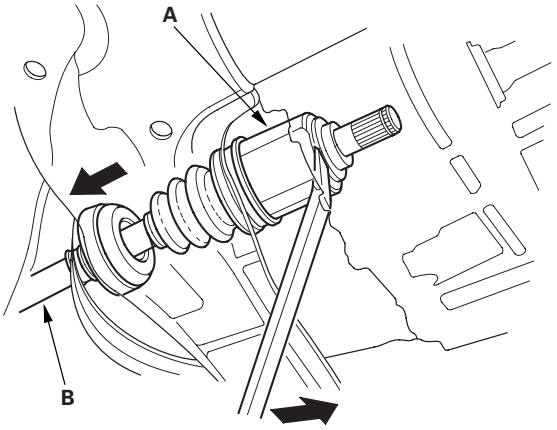

10. Right driveshaft: Drive the inboard joint (A) off the intermediate shaft with a drift and hammer. Remove the driveshaft as an assembly.

    NOTE: Do not pull on the driveshaft (B) or the inboard joint may come apart. Pull the driveshaft straight out to avoid damaging the oil seal.

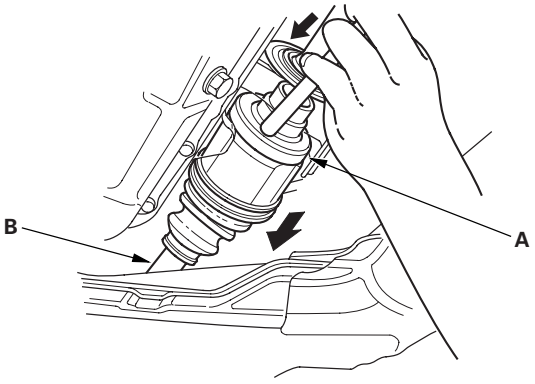

Driveshaft Disassembly

Special Tools Required
- Threaded adapter, 22 x 1.5 mm 07XAC-001010A
- Threaded adapter, 24 x 1.5 mm 07XAC-001020A
- Boot band pincers, Kent-Moore J-35910 or equivalent, commercially available
- Slide hammer, 5/8''-18 UNF, commercially available

Inboard Joint Side

1. Remove the set ring from the inboard joint.

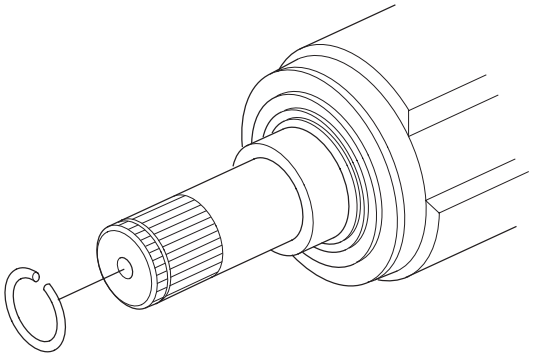

2. Remove the boot bands. Be careful not to damage the boot and dynamic damper.

   - If the boot band is a welded type (A), cut the boot band (B).
   - If the boot band is a double loop type (C), lift up the band end (D), then push it into the clip (E).
   - If the boot band is a low profile type (F), pinch the boot band using commercially available boot band pincers (G).

Welded type

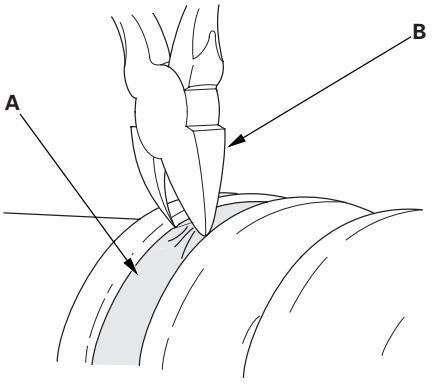

Double loop type

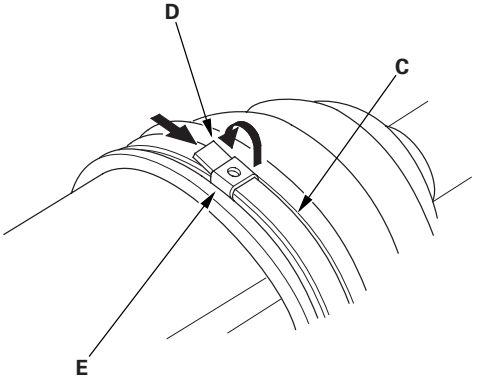

Low profile type

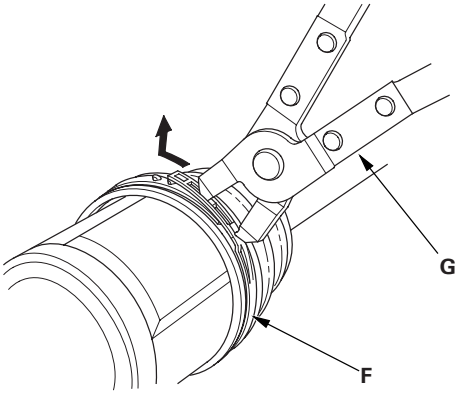

3. Make a mark (A) on each roller (B) and inboard joint (C) to identify the locations of rollers and grooves in the inboard joint. Then remove the inboard joint on the shop towel (D). Be careful not to drop the rollers when separating them from the inboard joint.

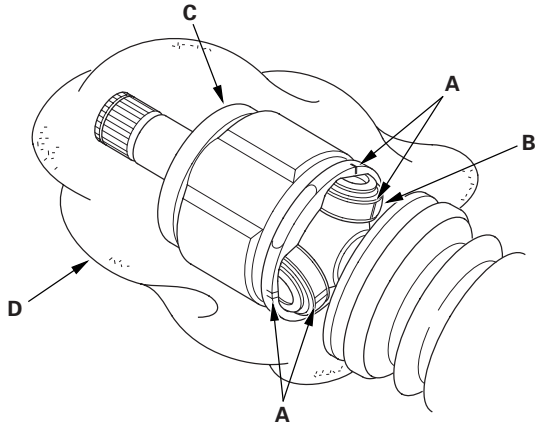

4. Make a mark (A) on the rollers (B) and spider (C) to identify the locations of rollers on the spider, then remove the rollers.

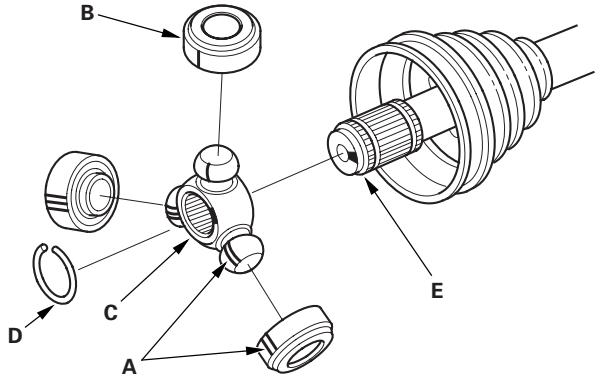

5. Remove the circlip (D).

6. Mark the spider and driveshaft (E) to identify the position of the spider on the shaft.

7. Remove the spider.

8. Wrap the splines on the driveshaft with vinyl tape (A) to prevent damage to the boot and dynamic damper.

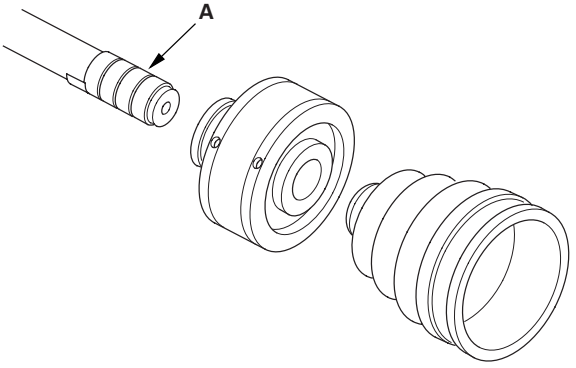

9. Remove the inboard boot and dynamic damper. Be careful not to damage the boot and dynamic damper.

10. Remove the vinyl tape.

(cont'd)

Driveshaft Disassembly (cont'd)

Outboard Joint Side

1. Remove the boot bands (A). Lift up the three tabs (B) with a screwdriver. Be careful not to damage the boot and dynamic damper.

Ear clamp type

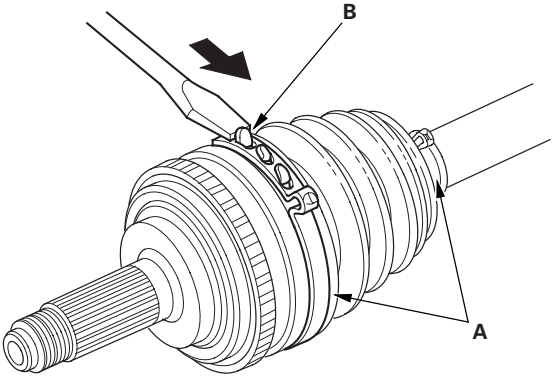

2. Slide the outboard boot (A) partially to the inboard joint side. Be careful not to damage the boot.

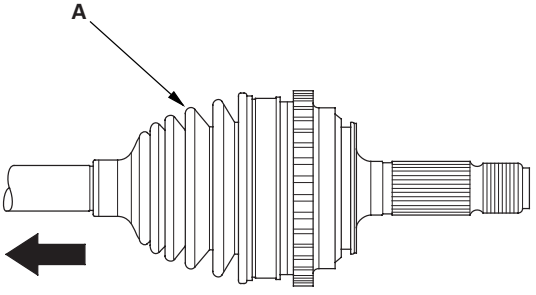

3. Wipe off the grease to expose the driveshaft and the outboard joint inner race.

4. Make a mark (A) on the driveshaft (B) at the same position of the outboard joint end (C).

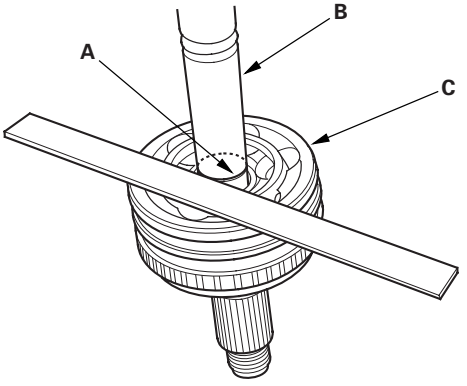

5. Carefully clamp the driveshaft in a vise.

K20A3 engine model: 07XAC-001010A
K20A2 engine model: 07XAC-001020A
K20Z1 engine model: 07XAC-001020A

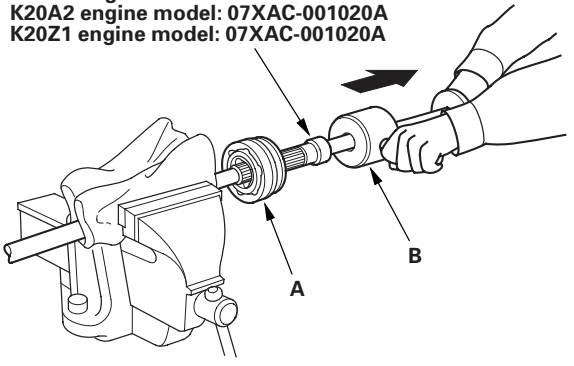

6. Remove the outboard joint (A) using the special tool and a commercially available 5/8''-18 UNF slide hammer (B).

7. Remove the driveshaft from the vise.

8. Remove the stop ring from the driveshaft.

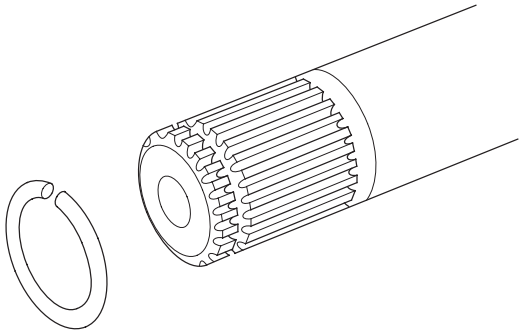

9. Wrap the splines on the driveshaft with vinyl tape (A) to prevent damage to the boot.

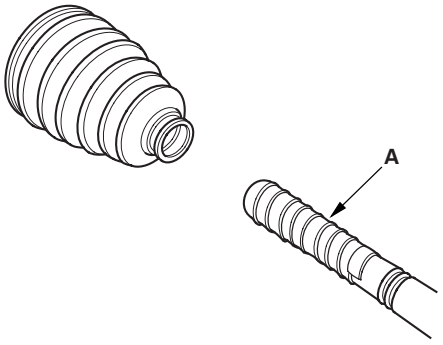

10. Remove the outboard boot. Be careful not to damage the boot.

11. Remove the vinyl tape.

Driveshaft Reassembly

Exploded View

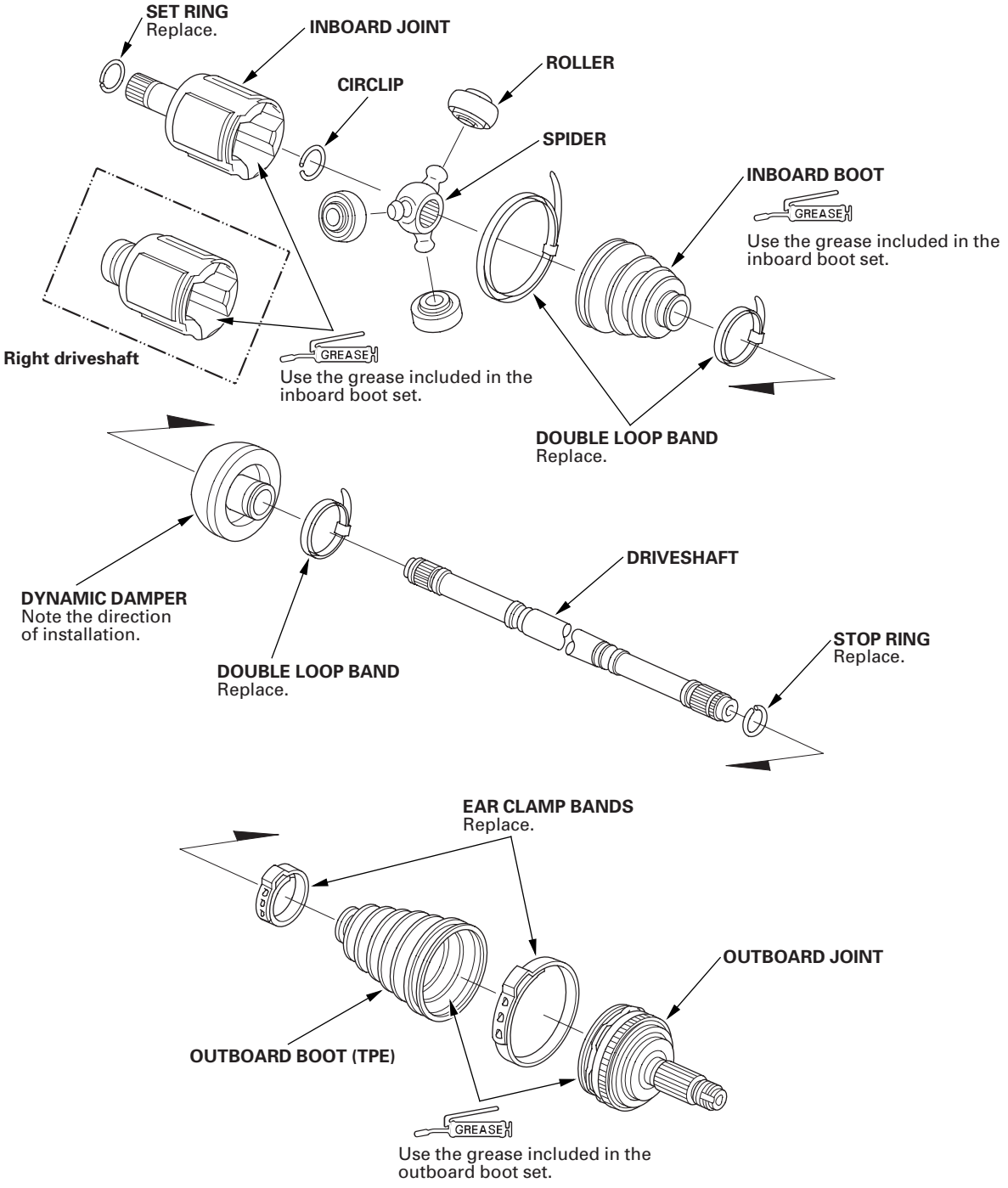

Special Tools Required
- Boot band tool, KD-3191 or equivalent, commercially available
- Boot band pincers, Kent-Moore J-35910 or equivalent, commercially available

NOTE: Refer to the Exploded View as needed during this procedure.

Inboard Joint Side

1. Wrap the splines with vinyl tape (A) to prevent damage to the inboard boot and dynamic damper.

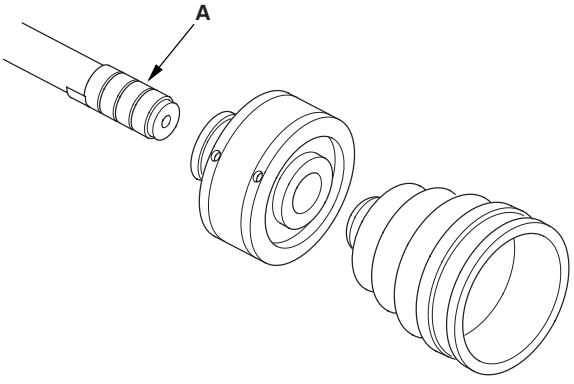

2. Install the dynamic damper and inboard boot onto the driveshaft, then remove the vinyl tape. Be careful not to damage the inboard boot and dynamic damper.

3. Install the spider (A) onto the driveshaft by aligning the marks (B) on the spider and the end of the driveshaft.

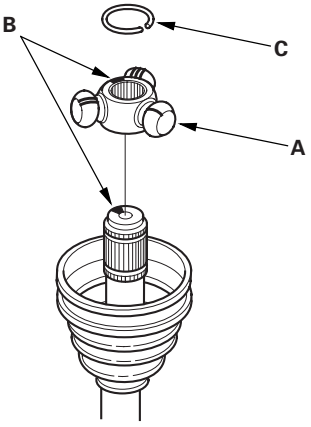

4. Install the circlip (C) into the driveshaft groove. Rotate the circlip in its groove to make sure it is fully seated.

5. Fit the rollers (A) onto the spider (B) with their high shoulders facing outward, and note these items:

   - Reinstall the rollers in their original positions on the spider by aligning the marks (C).
   - Hold the driveshaft pointed up to prevent the rollers from falling off.

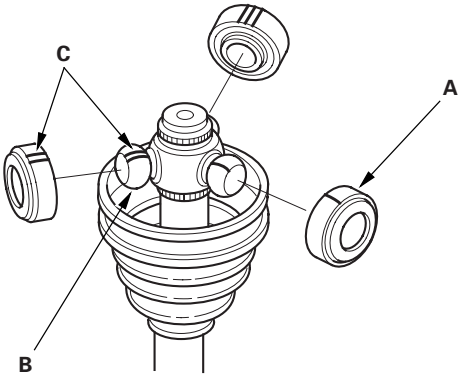

(cont'd)

Driveshaft Reassembly (cont'd)

6. Pack the inboard joint with the joint grease included in the new driveshaft set.

   Grease quantity
   Inboard joint:
   K20A2 engine model: 150—160 g (5.3—5.6 oz)
   K20A3 engine model: 130—140 g (4.6—4.9 oz)
   K20Z1 engine model: 150—160 g (5.3—5.6 oz)

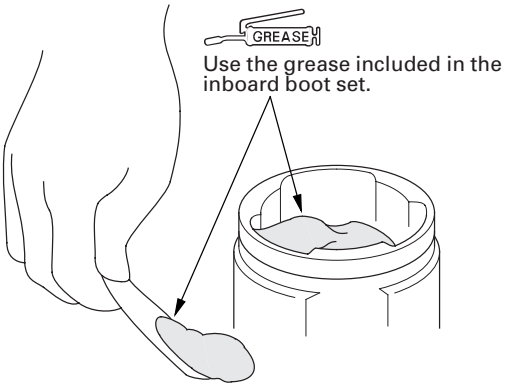

7. Fit the inboard joint onto the driveshaft, and note these items:

   - Reinstall the inboard joint onto the driveshaft by aligning the marks (A) on the inboard joint and the rollers.
   - Hold the driveshaft so the inboard joint is pointing up to prevent it from falling off.

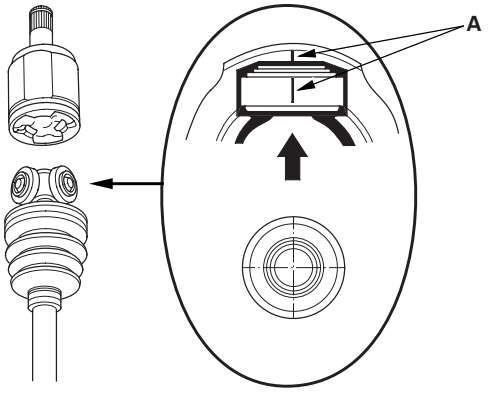

8. Adjust the inboard joint until the rollers are in the middle of the joint.

9. Fit the boot ends onto the driveshaft and the inboard joint, then install the new double loop band (A) onto the boot.

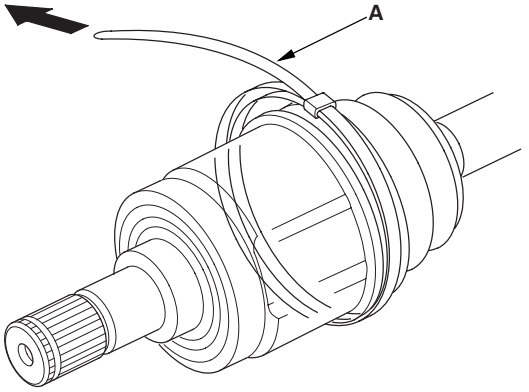

10. Pull up the slack in the band by hand.

11. Mark a position (A) on the band 10—14 mm (0.4—0.6 in.) from the clip (B).

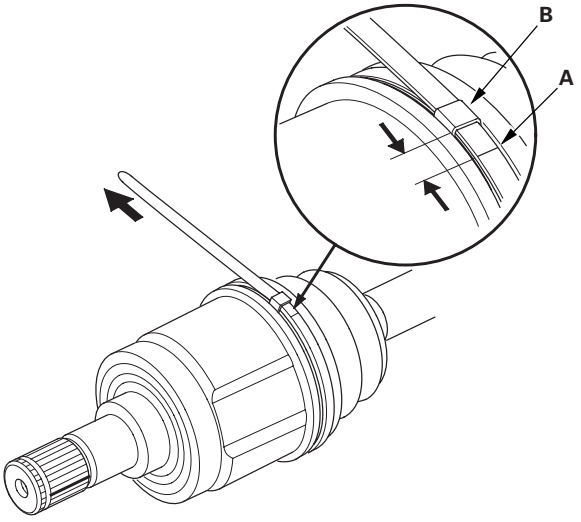

12. Thread the free end of the band through the nose section of the commercially available boot band tool KD-3191 or equvialent (A), and into the slot on the winding mandrel (B).

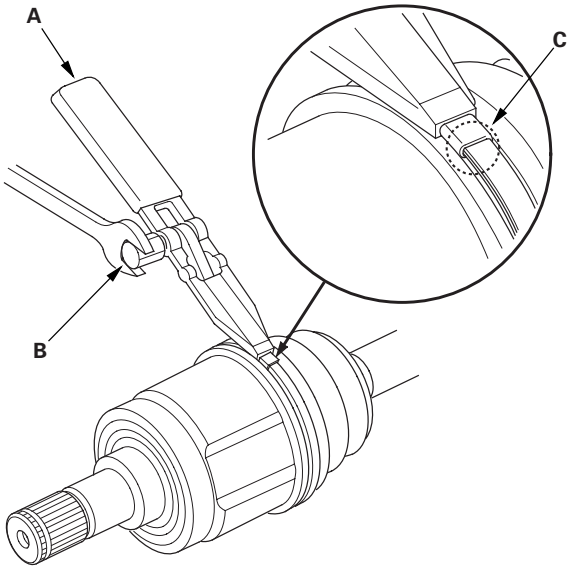

13. Using a wrench on the winding mandrel of the boot band tool, tighten the band until the marked spot (C) on the band meets the edge of the clip.

14. Lift up the boot band tool to bend the free end of the band 90 degrees to the clip. Center-punch the clip, then fold over the remaining tail onto the clip.

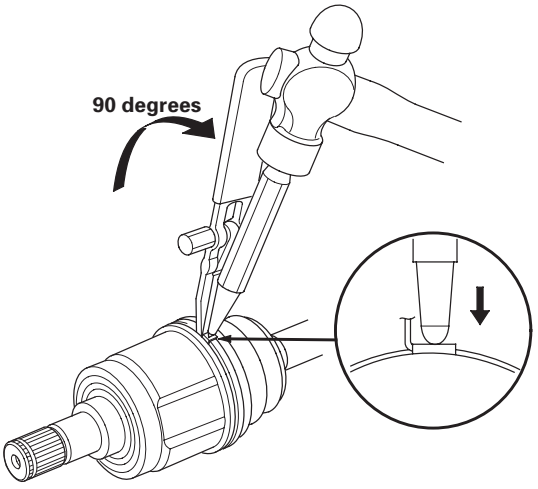

15. Unwind the boot band tool, and cut off the excess free end of the band to leave a 5—10 mm (0.2—0.4 in.) tail protruding from the clip.

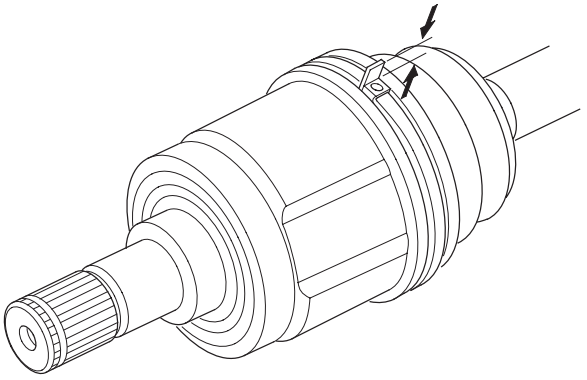

16. Bend the band end (A) by tapping it down with a hammer.

    NOTE:
    - Make sure the band and clip do not interfere with anything on the vehicle and the band does not move.
    - Remove any grease remaining on the surrounding surfaces.

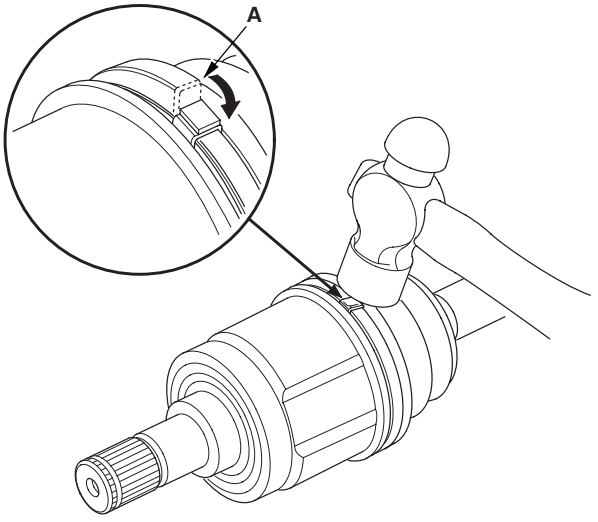

17. Repeat steps 9 through 16 for the band on the other end of the boot, then go to step 18.

(cont'd)

Driveshaft Reassembly (cont'd)

18. Install the new set ring (left driveshaft).

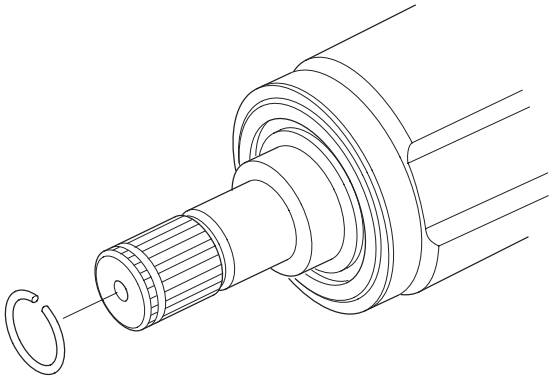

Outboard Joint Side

1. Wrap the splines with vinyl tape (A) to prevent damage to the outboard boot.

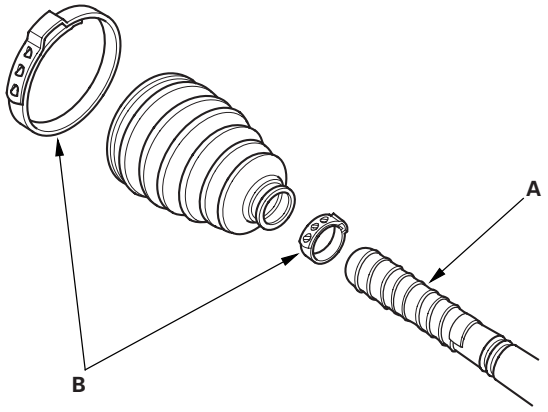

2. Install the new ear clamp bands (B) and outboard boot, then remove the vinyl tape. Be careful not to damage the outboard boot.

3. Install the new stop ring in the driveshaft groove (A).

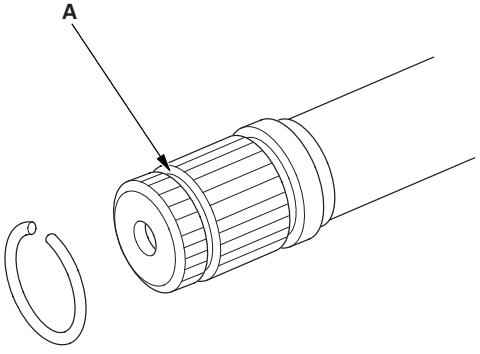

4. Pack about half of the grease included in the new joint boot set into the driveshaft hole in the outboard joint. Insert the driveshaft (A) into the outboard joint (B) until the stop ring (C) is closed to the joint.

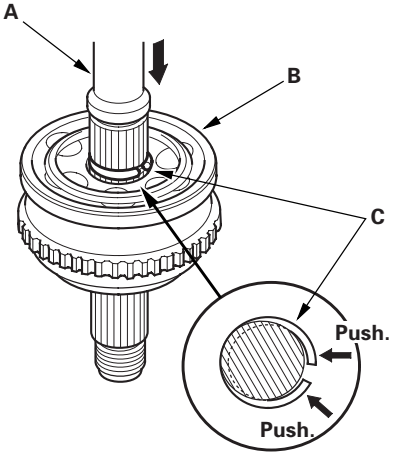

5. To completely seat the outboard joint, pick up the driveshaft and joint, and tap or hit them from a height of about 10 cm (4 in.) onto a hard surface. Do not use a hammer as excessive force may damage the driveshaft. Be careful not to damage the threaded section (A) of the outboard joint.

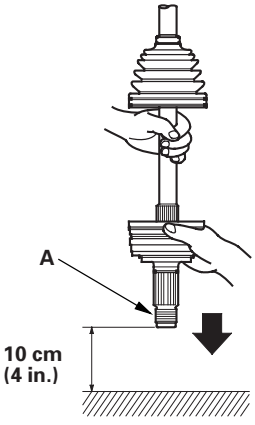

6. Check the alignment of the paint mark (A) with the outboard joint end (B).

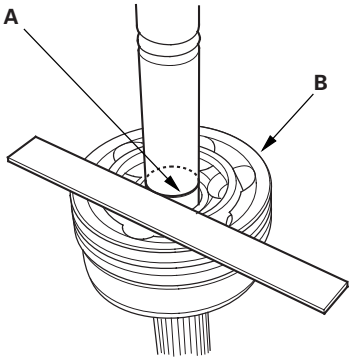

7. Pack the outboard joint (A) with the remaining joint grease included in the new joint boot set.

Grease quantity
Outboard joint:

K20A2 engine model:	**140—150 g (4.9—5.3 oz)**
K20A3 engine model:	**105—115 g (3.7—4.1 oz)**
K20Z1 engine model:	**140—150 g (4.9—5.3 oz)**

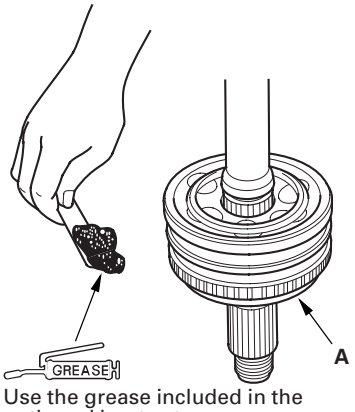

Use the grease included in the outboard boot set.

(cont'd)

Driveshaft Reassembly (cont'd)

8. Adjust the length of the driveshafts to these measurements, then adjust the boots to halfway between full compression and full extension. Make sure the ends of the boots seat in the groove of the driveshaft and joint.

Left driveshaft:
K20A2 engine model:
502—507 mm (19.8—20.0 in.)
K20A3 engine model:
503—508 mm (19.8—20.0 in.)
K20Z1 engine model:
505—510 mm (19.9—20.1 in.)

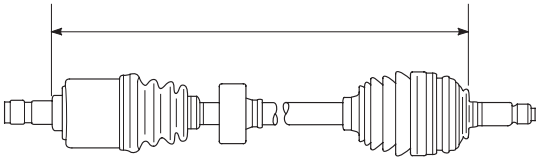

Right driveshaft:
K20A2 engine model:
481—486 mm (18.9—19.1 in.)
K20A3 engine model:
485—490 mm (19.1—19.3 in.)
K20Z1 engine model:
484—489 mm (19.1—19.3 in.)

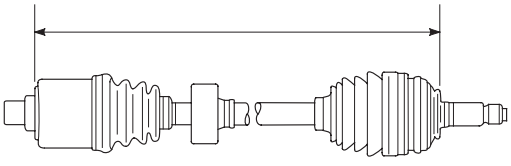

9. Position the dynamic damper as shown.

Left driveshaft:
K20A2 engine model:
287—291 mm (11.3—11.5 in.)
K20A3 engine model:
271—275 mm (10.7—10.8 in.)
K20Z1 engine model:
270—274 mm (10.6—10.7 in.)
Right driveshaft:
271—275 mm (10.7—10.8 in.)

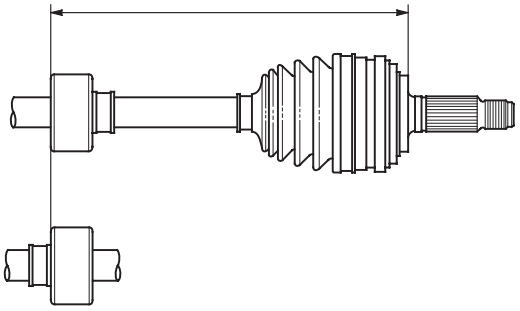

10. Fit the boot (A) ends onto the driveshaft (B) and outboard joint (C).

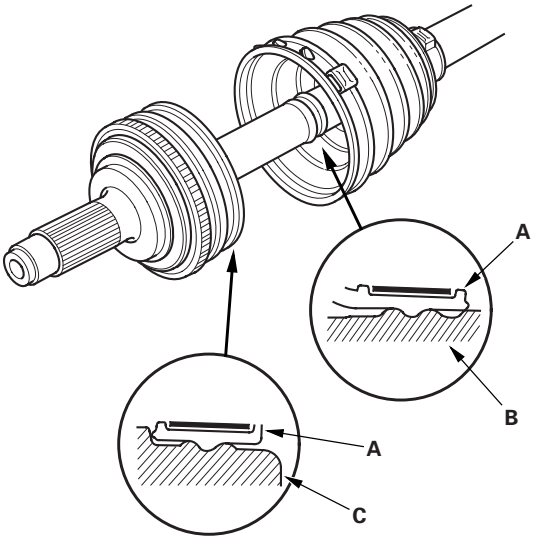

11. Close the ear portion (A) of the band with commercially available boot band pincers Kent-Moore J-35910 or equivalent (B).

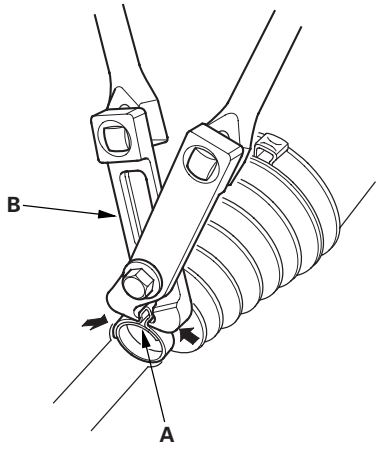

12. Check the clearance between the closed ear portion of the bands. If the clearance is not within the standard, close the ear portion of the bands tighter.

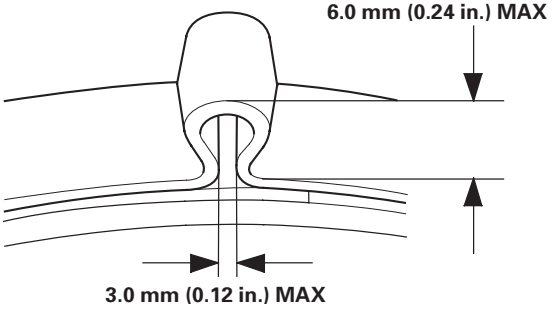

13. Repeat steps 11 and 12 for the band on the other end of the boot.

Driveshaft Installation

1. Install a new set ring in the set ring groove of the driveshaft (left driveshaft).

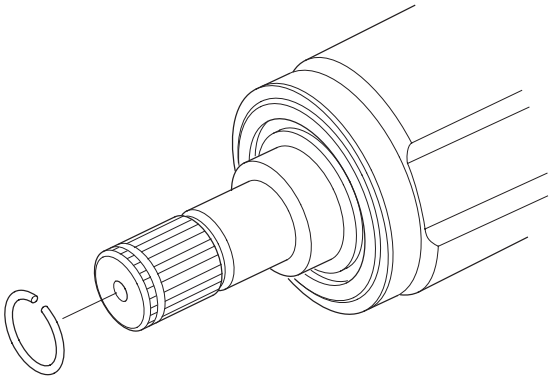

2. Apply 0.5—1.0 g (0.02—0.04 oz) of grease to the whole splined surface (A) of the right driveshaft. After applying grease, remove the grease from the splined grooves at intervals of 2—3 splines and from the set ring groove (B) so that air can bleed from the intermediate shaft.

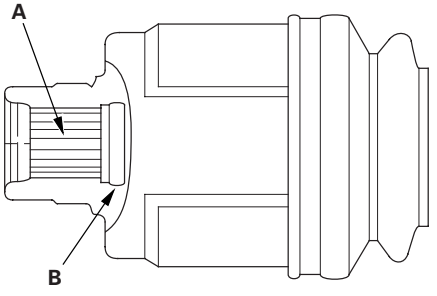

(cont'd)

Driveshaft Installation (cont'd)

3. Clean the areas where the driveshaft contacts the differential thoroughly with solvent or brake cleaner, and dry with compressed air. Do not wash the rubber parts with solvent. Insert the inboard end (A) of the driveshaft into the differential (B) or intermediate shaft (C) until the set ring (D) locks in the groove (E).

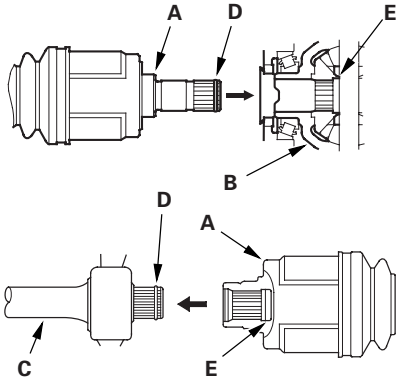

4. Install the outboard joint (A) into the front hub (B).

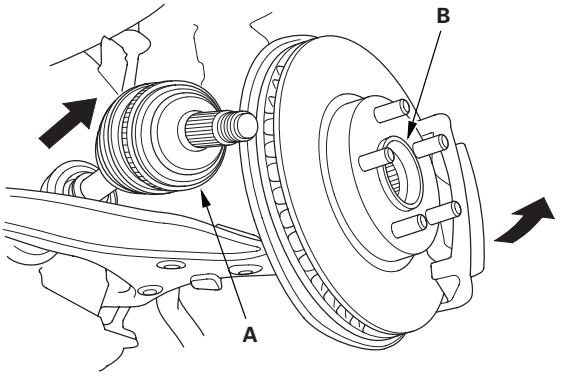

5. Install the knuckle (A) onto the lower arm (B). Be careful not to damage the ball joint boot (C). Wipe off the grease before tightening the nut at the ball joint. Torque the castle nut (D) to the lower torque specification, then tighten it only far enough to align the slot with the ball joint pin hole. Do not align the nut by loosening it.

   NOTE: Make sure the ball joint boot is not damaged or cracked.

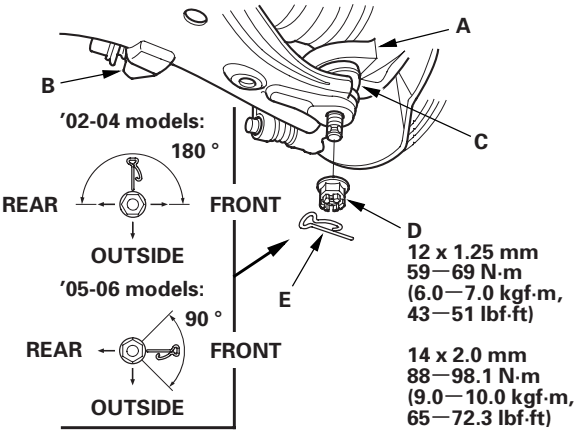

6. Install the new lock pin (E) into the pin hole from the inside of the vehicle.

7. Connect the front stabilizer link (A) to the lower arm. Hold the stabilizer link ball joint pin (B) with a hex wrench (C), and tighten the new flange nut (D).

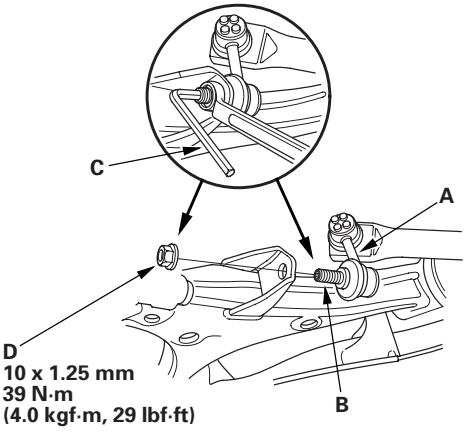

8. Install a new spindle nut (A), then tighten the nut. After tightening, use a drift to stake the spindle nut shoulder (B) against the driveshaft.

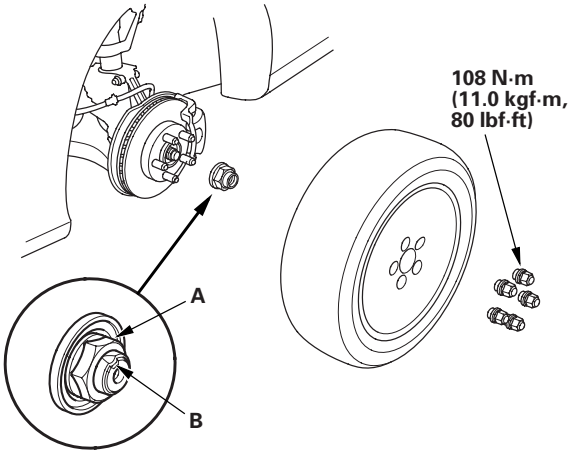

K20A2 engine model: 245 N·m (25.0 kgf·m, 181 lbf·ft)
K20A3 engine model: 181 N·m (18.5 kgf·m, 134 lbf·ft)
K20Z1 engine model: 245 N·m (25.0 kgf·m, 181 lbf·ft)

9. Clean the mating surfaces of the brake disc and the front wheel, then install the front wheel with the wheel nuts.

10. Turn the front wheel by hand, and make sure there is no interference between the driveshaft and surrounding parts.

11. Refill the transmission with recommended transmission fluid:

    - Manual transmission (see page 13-4)
    - Automatic transmission (see page 14-272)

12. Check the front wheel alignment, and adjust it if necessary (see page 18-4).

Intermediate Shaft Removal

1. Drain the transmission fluid. Reinstall the drain plug using a new washer:

    - Manual transmission (see page 13-4)
    - Automatic transmission (see page 14-272)

2. Remove the right driveshaft (see page 16-4).

3. Remove the heat cover.

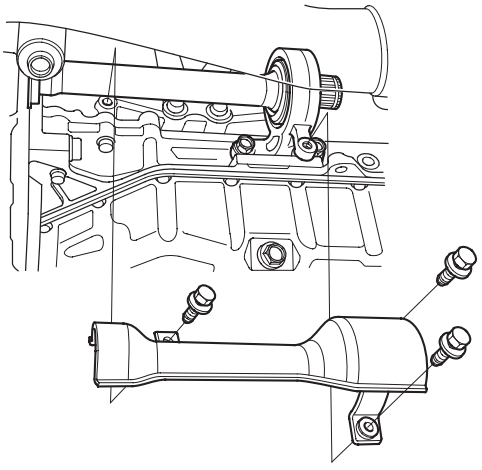

4. Remove the flange bolt (A) and two dowel bolts (B).

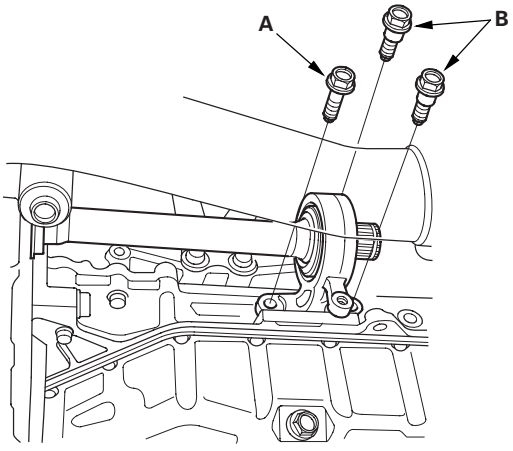

(cont'd)

Intermediate Shaft Removal (cont'd)

5. Remove the intermediate shaft (A) from the differential. Hold the intermediate shaft horizontally until it is clear of the differential to prevent damage to the differential oil seal (B).

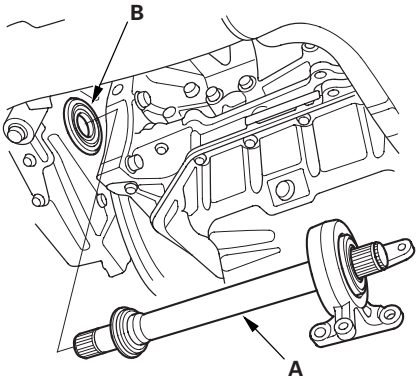

Intermediate Shaft Disassembly

Special Tools Required
- Oil seal driver 07947-SB00100
- Half shaft base 07NAF-SR30101

1. Remove the set ring (A), outer seal (B), and external snap ring (C).

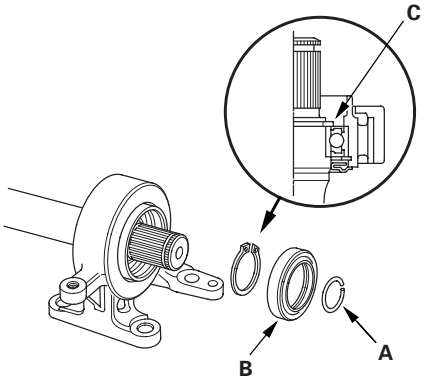

2. Press the intermediate shaft (A) out of the intermediate shaft bearing (B) using a press. Be careful not to damage the metal rings (C) on the intermediate shaft during disassembly.

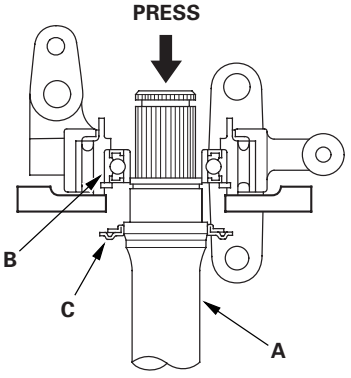

3. Remove the internal snap ring.

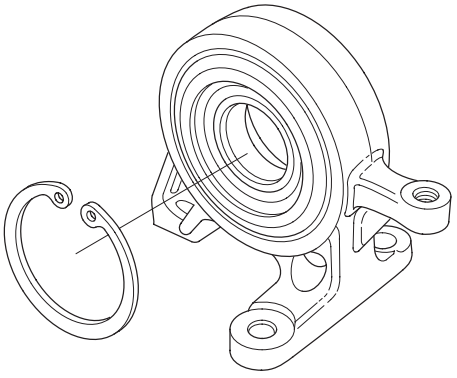

4. Press the intermediate shaft bearing (A) out of the bearing support (B) using the special tools and a press.

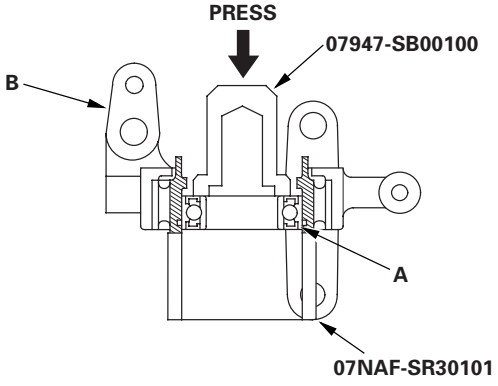

Intermediate Shaft Reassembly

Exploded View

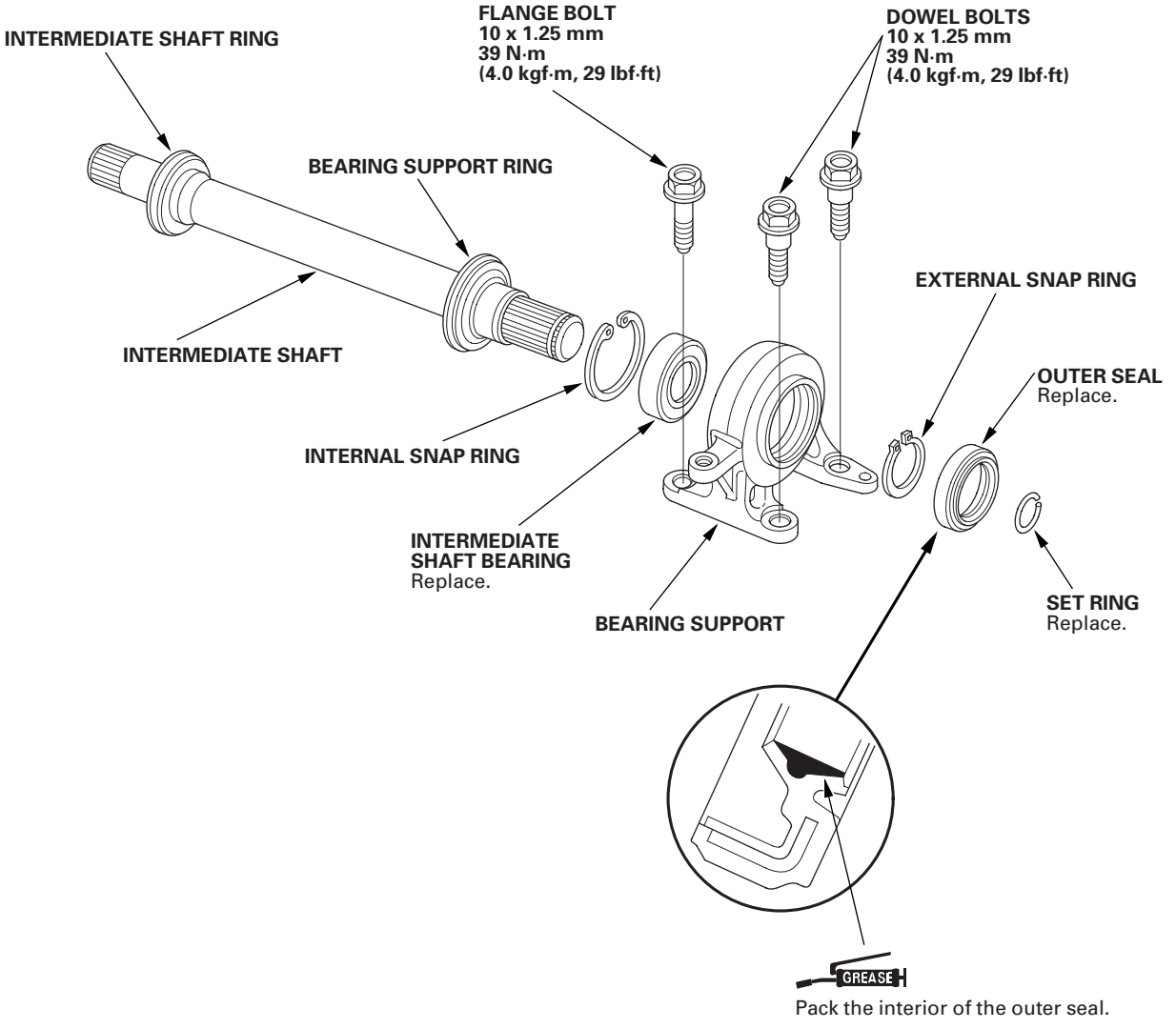

Special Tools Required
- Driver 07749-0010000
- Attachment, 52 x 55 mm 07746-0010400
- Attachment, 35 mm I.D. 07746-0030400
- Oil seal driver 07GAD-PH70201

NOTE: Refer to the Exploded View as needed during this procedure.

1. Clean the disassembled parts with solvent, and dry them with compressed air. Do not wash the rubber parts with solvent.

2. Press the intermediate shaft bearing (A) into the bearing support (B) using the special tools and a press.

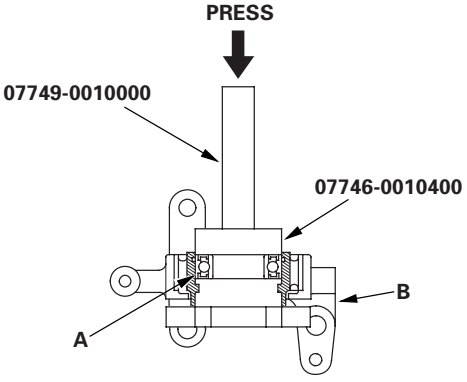

3. Install, then seat the internal snap ring into the groove of the bearing support.

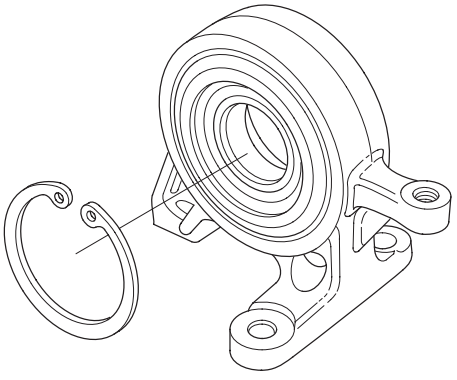

4. Press the intermediate shaft (A) into the shaft bearing using the special tool and a press.

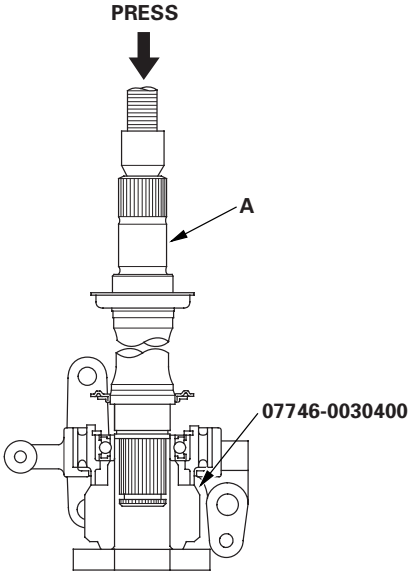

5. Install, then seat the external snap ring (A) into the groove of the intermediate shaft (B).

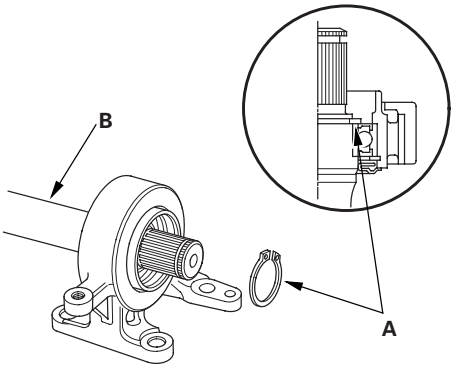

(cont'd)

Intermediate Shaft Reassembly (cont'd)

6. Install the outer seal (A) into the bearing support (B) using the special tool and a press.

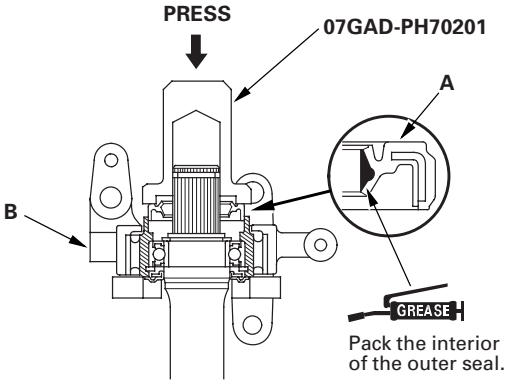

7. Install the set ring.

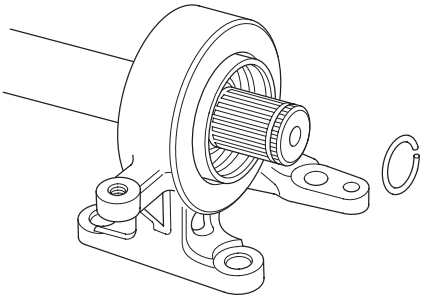

Intermediate Shaft Installation

1. Use solvent or brake cleaner to thoroughly clean the areas where the intermediate shaft (A) contacts the transmission (differential), and dry with compressed air. Do not wash the rubber parts with solvent. Insert the intermediate shaft assembly into the differential. Hold the intermediate shaft horizontally to prevent damage to the differential oil seal (B).

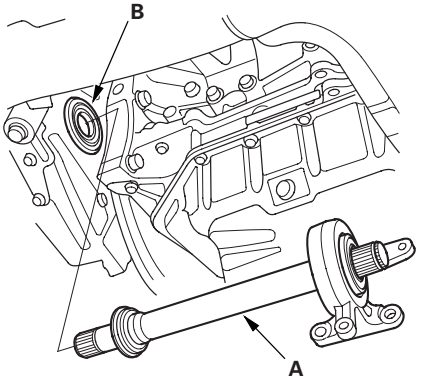

2. Install the flange bolt (A) and two dowel bolts (B).

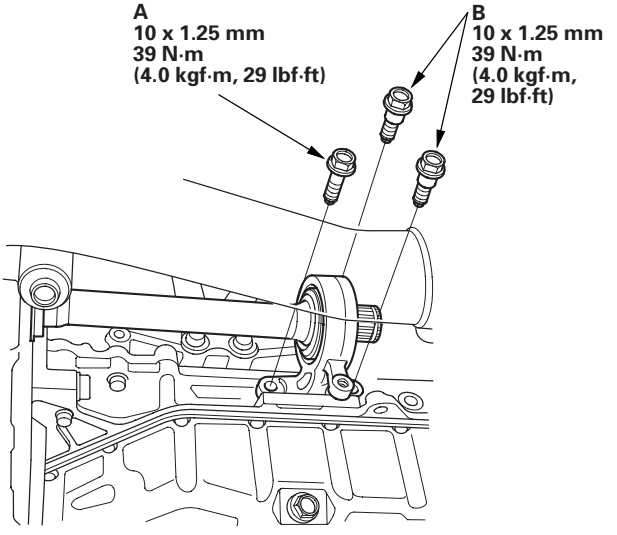

3. Install the heat cover, and tighten the three bolts.

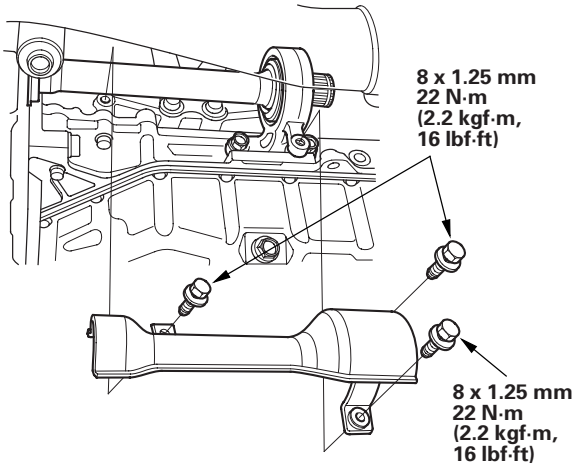

4. Install the right driveshaft (see page 16-17).

5. Refill the transmission with the recommended transmission fluid:

   - Manual transmission (see page 13-4)
   - Automatic transmission (see page 14-272)

Steering

Power Steering

Special Tools 17-2
Component Location Index 17-3
Symptom Troubleshooting Index 17-4
Symptom Troubleshooting 17-6
Steering Wheel Rotational Play Check 17-7
Power Assist Check 17-7
Steering Linkage and Gearbox Inspection 17-8
Pump Pressure Test with T/N 07406-0010001 17-9
Pump Pressure Test with T/N 07406-001000A 17-10
Fluid Leakage Inspection 17-11
Fluid Replacement 17-12
Power Steering Hose, Line, and Pressure Switch Replacement 17-13
Pump Replacement 17-14
Pump Overhaul 17-15
* Steering Wheel Removal 17-22
Steering Wheel Disassembly/Reassembly 17-23
* Steering Wheel Installation 17-24
* Steering Column Removal and Installation 17-25
Steering Column Tilt Operation Check 17-27
Steering Column/Tilt Lever Inspection/Adjustment .. 17-28
Steering Lock Replacement 17-29
Rack Guide Adjustment 17-30
Steering Gearbox Removal 17-32
Steering Gearbox Overhaul 17-36
Steering Gearbox Installation 17-54
Tie-rod Ball Joint Boot Replacement 17-58
Gearbox Mount Cushion Replacement 17-59

Special Tools

Ref. No.	Tool Number	Description	Qty
①	07GAF-PH70100	Pilot Collar	1
②	07MAC-SL0A202	Ball Joint Remover, 28 mm	1
③	07NAD-SR30101	Driver Handle	1
④	07NAD-SR30200 or 07NAD-SR3020A	Cylinder End Seal Remover Attachment	1
⑤	07NAG-SR30900 or 07NAG-SR3090A	Valve Seal Ring Sizing Tool	1
⑥	07QAD-P0A0100	Attachment, 42 mm	1
⑦	07XAG-S0KA100	Piston Seal Ring Sizing Tool, 44 mm	1
⑧	07XAG-S0KA200	Piston Seal Ring Guide, 44 mm	1
⑨	07YAG-S2X0100	Sleeve Seal Ring Guide	1
⑩	07ZAA-S5A0100	Locknut Wrench	1
⑪	07ZAB-S5A0100	Pulley Holder	1
⑫	07ZAF-S5A0100	Driver, 27 mm	1
⑬	07ZAG-S5A0100	Sleeve Seal Ring Sizing Tool, 36 mm	1
⑭	07ZAG-S5A0200	Valve Seal Ring Guide	1
⑮	07974-6890801 or 07974-689080A	Cylinder End Seal Slider	1
⑯	07VAK-P8A011A	P/S Joint Adapter (Pump)	1
⑰	07ZAK-S7CA100	P/S Joint Adapter Plate (Pump)	1
⑱	07ZAK-S7CA200	P/S Joint Adapter (Hose)	1
⑲	07ZAG-S7A0100	Piston Seal Ring Guide, 42 mm	1
⑳	07ZAG-S7A0200	Piston Seal Ring Sizing Tool, 42 mm	1
㉑	07406-0010001 or 07406-001000A	P/S Pressure Gauge	1
㉒	07746-0010100	Attachment, 32 x 35 mm	1
㉓	07749-0010000	Driver	1
㉔	07916-SA50001	Locknut Wrench, 40 mm	1

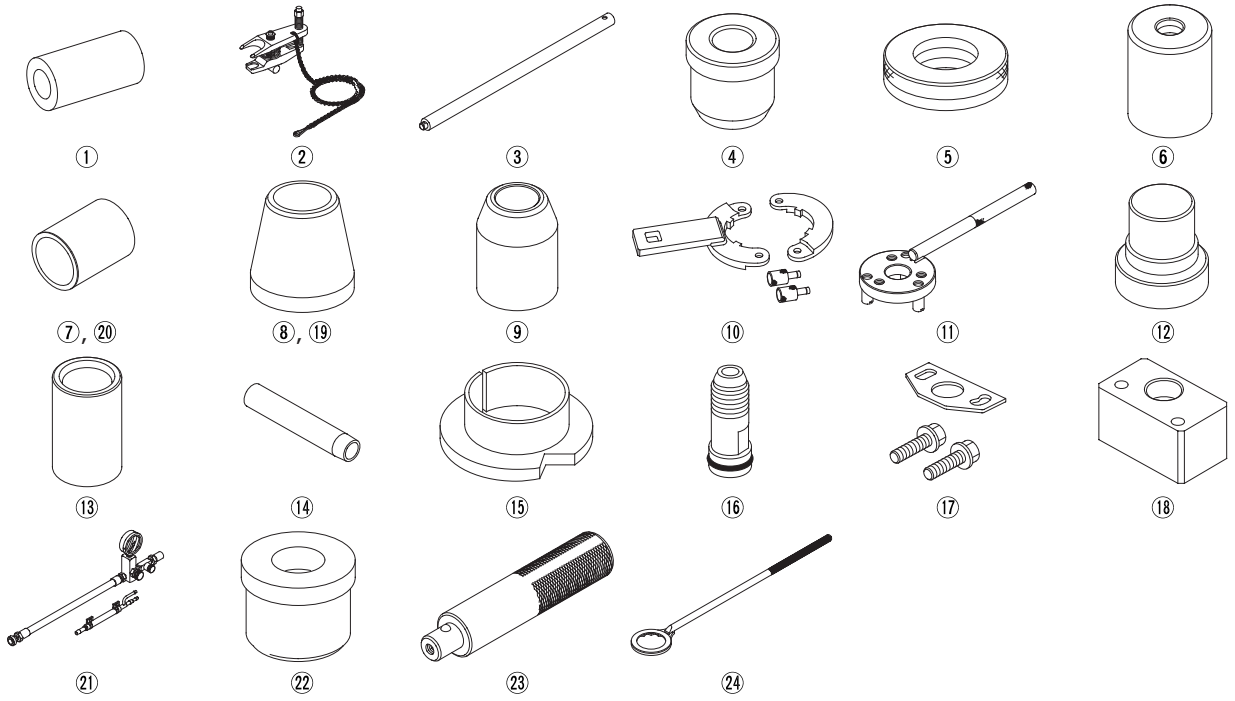

Component Location Index

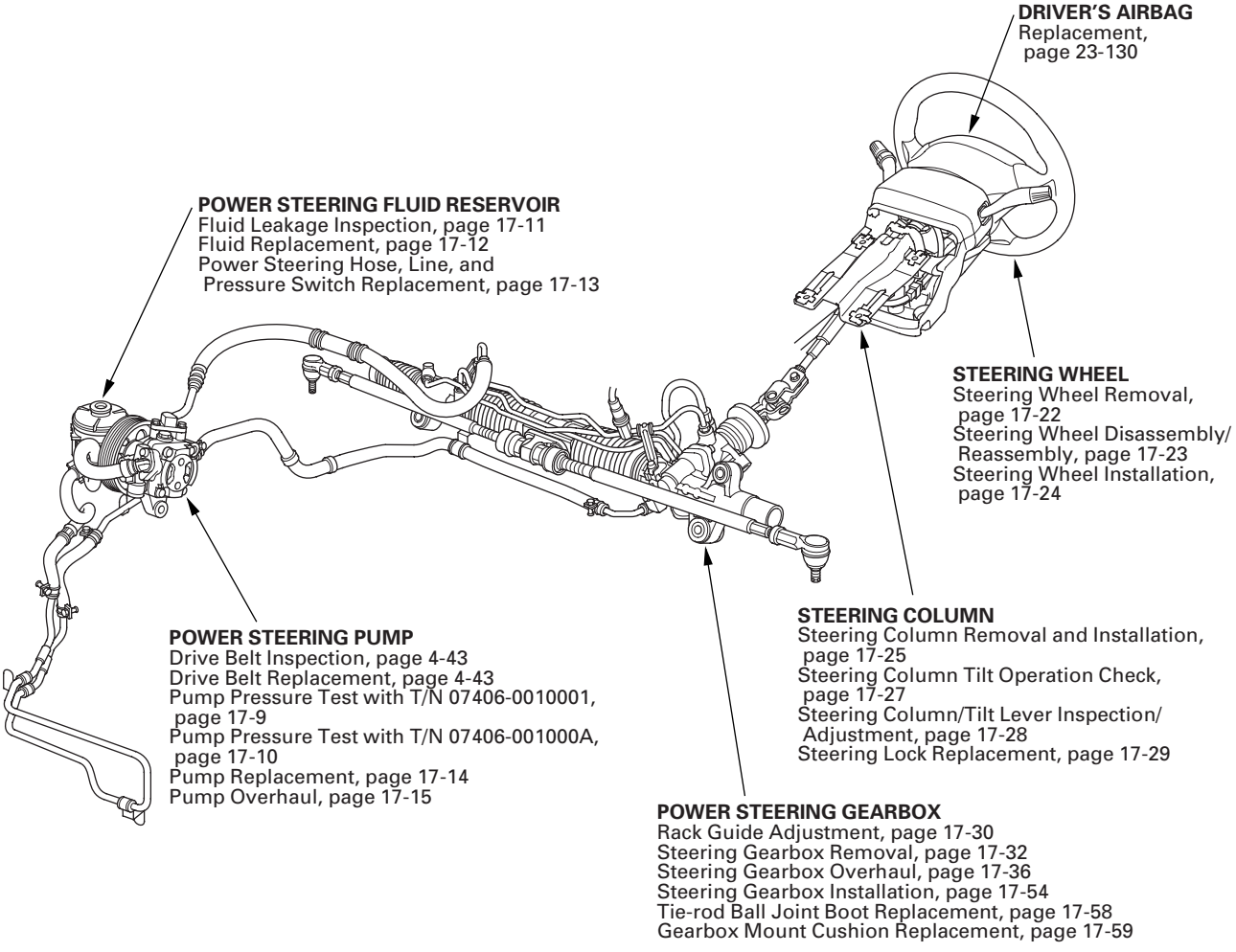

Symptom Troubleshooting Index

Find the symptom in the chart below, and do the related procedures in the order listed until you find the cause.

Symptom	Procedure(s)	Also check for:
Hard steering	Troubleshoot the system (see page 17-6).	• Modified suspension • Tire sizes, tire varieties, and air pressure
Assist (excessively light steering at high speed)	Check the rack guide adjustment (see page 17-30).	• Front wheel alignment (see page 18-4) • Tire pressure
Shock or vibration when the steering wheel is turned to full lock	1. Check the rack guide adjustment (see page 17-30). 2. Check the drive belt for slippage (see page 4-43). 3. Overhaul the steering gearbox (see page 17-36).	
Steering wheel will not return smoothly	1. Check cylinder lines for deformation. 2. Check wheel alignment (see page 18-4). 3. Overhaul the steering gearbox (see page 17-36).	
Uneven or rough steering	1. Check the rack guide adjustment (see page 17-30). 2. Check the drive belt (see page 4-43). 3. Check for a low or erratic engine idle speed (see page 11-349). 4. Check for air in the power steering system due to low fluid level or an air leak at the pump inlet hose. 5. Check for low fluid level in the power steering reservoir due to possible leaks in system. 6. Overhaul the steering gearbox (see page 17-36).	
Steering wheel kicks back during wide turns	1. Check the drive belt (see page 4-43). 2. Check the power steering pump fluid pressure with T/N 07406-0010001 (see page 17-9), or T/N 07406-001000A (see page 17-10).	
Humming noise from the power steering system	1. Check when the noise occurs: • If the noise is heard 2 to 3 minutes after starting the engine in cold weather, this is normal. • If the noise is heard when the wheel is turn with the vehicle stopped, this is normal due to the fluid pulsation. 2. Check for the high-pressure hose touching the subframe or body. 3. Check for automatic transmission converter noise. 4. Check for air bubbles in the power steering fluid, or an air leak on inlet side of the pump. 5. Check for particle contamination of fluid and a restricted filter in the reservoir.	Power steering pump fluid pressure

Power steering rack rattle or chattering	1. Check for loose steering components (tie-rod end ball joints). Tighten or replace as necessary. 2. Check the steering column shaft for wobbling. If the steering column wobbles, replace the steering column assembly (see page 17-25). 3. Check the rack guide adjustment (see page 17-30). 4. Check the power steering pump pulley. • If the pulley is loose, tighten it (see step 47 on page 17-21). • If the pump shaft is loose, replace the pump (see page 17-14).	
Hissing noise/ foaming fluid in reservoir	• Check the fluid level. If low, fill the reservoir to the proper level and check for leaks. • Check the reservoir for leaks. • Check for a crushed inlet hose or loose hose clamp allowing air into the suction side of the system. • Check the power steering pump shaft oil seal for leaks.	
Noise from the power steering pump	• Compare the pump noise at normal operating temperature to another like vehicle (pump noise up to 2—3 minutes after starting the engine in cold weather is normal). • Remove and inspect the pump for wear and damage (see page 17-15).	
Squeaking from the power steering pump	Check the drive belt (see page 4-43).	
Fluid leaks from the steering gearbox	• Fluid leaks from the top of the valve body unit: Overhaul the steering gearbox (see page 17-36). • Fluid leaks from the boot A: Replace the valve oil seal on the pinion shaft. • Replace the cylinder end seal on the gearbox side. • Fluid leaks from boot B: Replace the left cylinder end seal. • Fluid leaks from pinion shaft near the lower steering joint bolt: Overhaul the valve body unit.	
Fluid leaks from the power steering line	• Fluid leaks from the cylinder line connections (flare nuts): Tighten the connection and retest. • Fluid leaks from damaged cylinder lines: Replace the cylinder line. • Fluid leaks from the pump outlet hose or return line fitting on the valve body unit (flair nuts): Tighten the fitting and retest. If it still leaks, replace the hose, the line, or valve body unit as necessary.	
Fluid leaks from the power steering pump	• Fluid leaks from the front oil seal: Replace the front oil seal. • Fluid leaks from the power steering pump housing: Replace the leaking O-rings or seals (see page 17-15), and if necessary, replace the power steering pump (see page 17-14).	
Fluid leaks from the power steering reservoir	• Fluid leaks from around the reservoir cap: Fluid level is too high; drain the reservoir to the proper level. Aerated fluid; check for an air leak on the inlet side of pump. • Fluid leaks from reservoir: Check the reservoir for cracks and replace as necessary.	
Fluid leaks from the power steering pump outlet hose (high-pressure)	• Check the fitting for loose bolts. If the bolts are tight, replace the fitting O-ring. • Fluid leaks at the swagged joint: Replace the outlet hose.	
Fluid leaks from the power steering pump inlet hose (low-pressure)	Check the hose for damage, deterioration, or improper assembly. Replace or repair as necessary.	

Symptom Troubleshooting

Hard Steering

1. Check the power assist (see page 17-7).

   K20A2 engine, K20Z1 engine models:
   Is the starting load more than 38.2 N (3.9 kgf, 8.6 lbf)?
   K20A3 engine model:
   Is the starting load more than 37.2 N (3.8 kgf, 8.4 lbf)?

   YES—Go to step 2.
   NO—Power assist is OK. ■

2. Measure steady-state fluid pressure from the pump at idle with T/N 07406-0010001 (see page 17-9) or T/N 07406-001000A (see page 17-10).

   Is the pressure 1,470 kPa (15 kgf/cm^2, 213 psi) or less?

   YES—Go to step 3.
   NO—Go to step 7.

3. Measure the pump relief pressure at idle with T/N 07406-0010001 (see page 17-9) or T/N 07406-001000A (see page 17-10).

   K20A2 engine model:
   Is the pressure 7,160—7,850 kPa (73—80 kgf/cm^2, 1,040—1,140 psi) or less?
   K20Z1 engine model:
   Is the pressure 7,360—8,040 kPa (75—82 kgf/cm^2, 1,070—1,170 psi) or less?
   K20A3 engine model:
   Is the pressure 6,570—7,260 kPa (67—74 kgf/cm^2, 950—1,050 psi) or less?

   YES—Go to step 4.
   NO—Faulty pump assembly. ■

4. With a spring scale, measure the power assist in both directions, to the left and to the right.

   Are the two measurements within 2.9 N (0.3 kgf, 0.66 lbf) of each other?

   YES—Go to step 5.
   NO—Go to step 8.

5. Measure the fluid pressure with T/N 07406-0010001 (see page 17-9) or T/N 07406-001000A (see page 17-10) with both pressure gauge valves open (if so equipped), while turning the steering wheel fully to the left and fully to the right.

   K20A2 engine model:
   Is the pressure 7,160—7,850 kPa (73—80 kgf/cm^2, 1,040—1,140 psi) or less?
   K20Z1 engine model:
   Is the pressure 7,360—8,040 kPa (75—82 kgf/cm^2, 1,070—1,170 psi) or less?
   K20A3 engine model:
   Is the pressure 6,570—7,260 kPa (67—74 kgf/cm^2, 950—1,050 psi) or less?

   YES—Go to step 6.
   NO—Faulty gearbox. ■

6. Adjust the rack guide (see page 17-30) and retest.

   Is the steering OK?

   YES—Repair is completed. ■
   NO—Faulty gearbox. ■

7. Check the feed and return lines between the pump and the gearbox for clogging and deformation.

   Are the lines clogged or deformed?

   YES—Repair or replace the lines. ■
   NO—Faulty valve body unit or pump. ■

8. Check the cylinder lines for deformation (see page 17-11).

   Are the lines deformed?

   YES—Replace the lines. ■
   NO—Go to step 9.

9. Check for a bent rack shaft or misadjusted rack guide (too tight).

   Is the rack shaft bent or the rack guide adjusted too tight?

   YES—Replace the rack or readjust the rack guide. ■
   NO—Faulty valve body unit. ■

Steering Wheel Rotational Play Check

1. Turn the front wheels to the straight ahead position.

2. Measure how far you can turn the steering wheel left and right without moving the front wheels.

   - If the play is within the limit, the gearbox and linkages are OK.
   - If the play exceeds the limit, adjust the rack guide (see page 17-30). If the play is still excessive after rack guide adjustment, inspect the steering linkage and gearbox (see page 17-8).

Rotational play: 0—10 mm (0—0.39 in.)

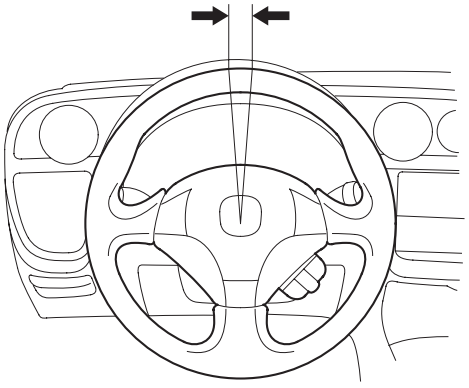

Power Assist Check

NOTE: This test should be done with original equipment tires and wheels at the correct tire pressure.

1. Check the power steering fluid level (see page 17-12).

2. Start the engine, let it idle, and turn the steering wheel from lock-to-lock several times to warm up the fluid.

3. Attach a commercially available spring scale to the steering wheel. With the engine idling and the vehicle on a clean, dry floor, pull the scale as shown and read it as soon as the tires begin to turn.

   - If the scale reads no more than specifications, the gearbox and pump are OK.
   - If the scale reads more than specifications, troubleshoot the steering system (see page 17-6).

Initial turning load:
K20A2 engine, K20Z1 engine models:
38.2 N (3.9 kgf, 8.6 lbf)
K20A3 engine model: 37.2 N (3.8 kgf, 8.4 lbf)

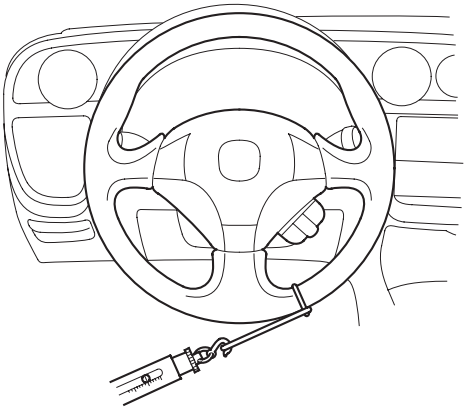

Steering Linkage and Gearbox Inspection

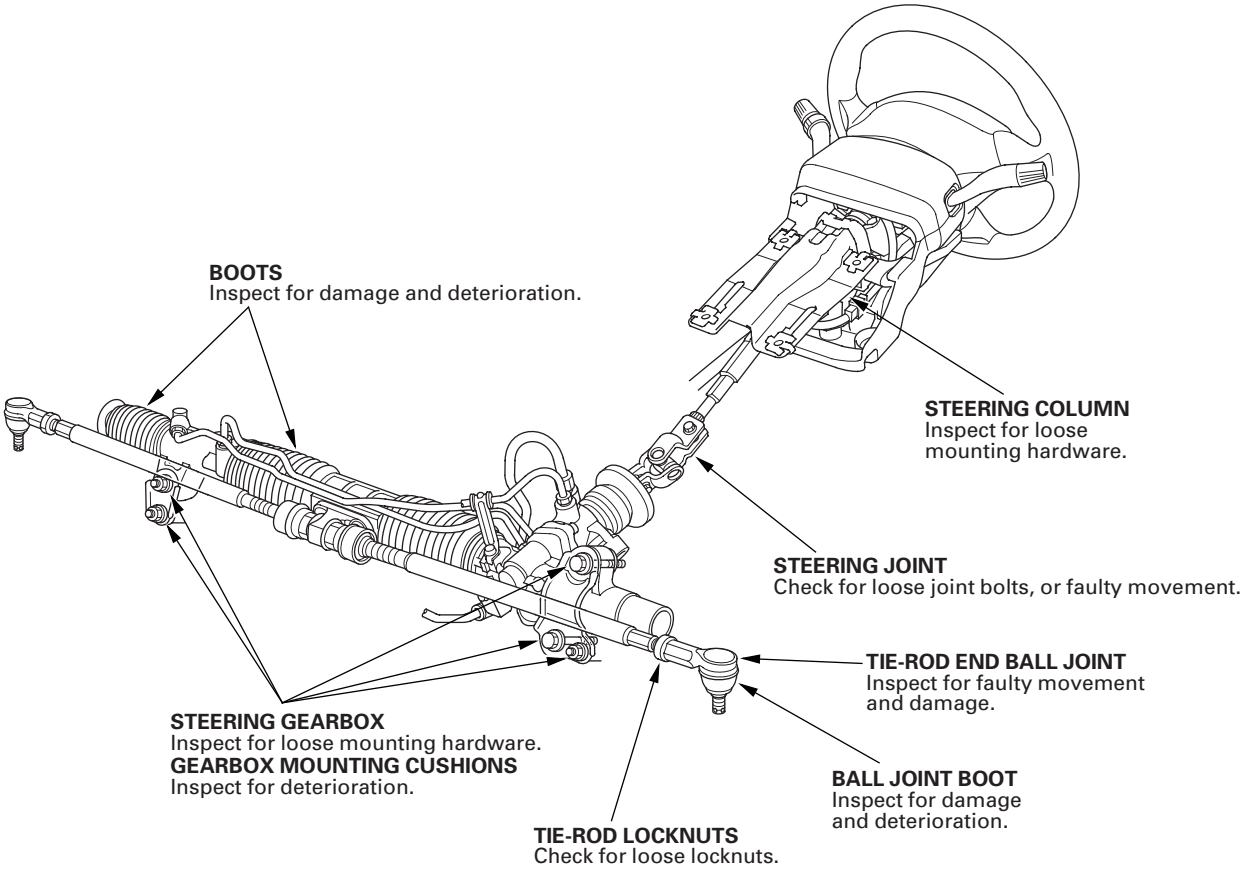

Pump Pressure Test with T/N 07406-0010001

Special Tools Required
- P/S joint adapter (pump) 07VAK-P8A011A
- P/S joint adapter plate (pump) 07ZAK-S7CA100
- P/S joint adapter (hose) 07ZAK-S7CA200
- P/S pressure gauge 07406-0010001

Check the fluid pressure as follows to determine whether the trouble is in the pump or gearbox.

1. Check the power steering fluid level (see page 17-12).

2. Disconnect the pump outlet hose (A) from the pump outlet with care so as not to spill the power steering fluid on the frame and other parts. Install the P/S joint adapter (pump) on the pump outlet (B).

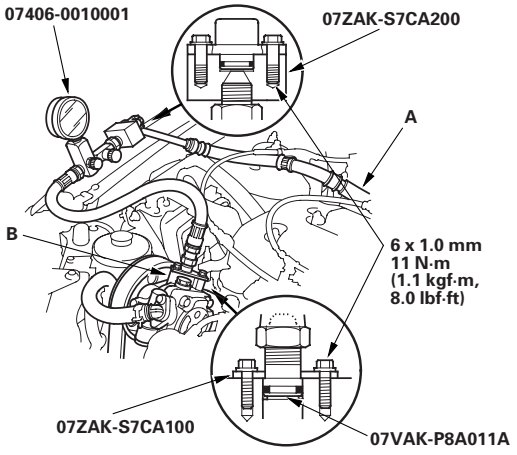

3. Connect the P/S joint adapter (hose) to the P/S pressure gauge, then connect the pump outlet hose (A) to the P/S joint adapter (hose).

4. Install the P/S pressure gauge to the P/S joint adapter (pump).

5. Fully open the shut-off valve (A).

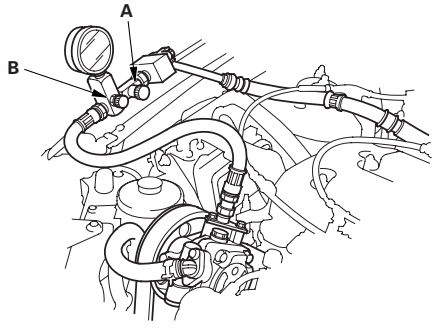

6. Fully open the pressure control valve (B).

7. Start the engine and let it idle.

8. Turn the steering wheel from lock-to-lock several times to warm the fluid to operating temperature at 158 ℉ (70 ℃).

9. Measure steady-state fluid pressure while the engine is idling. If the pump is in good condition, the pressure should be no more than 1,470 kPa (15 kgf/cm^2, 213 psi). If the pressure is too high, check for:

   - Clogged or deformed feed or return line between the pump and gearbox.
   - Clogged valve body unit.

10. Raise the engine speed to 3,000 rpm, and measure the fluid pressure. If the pump is in good condition, the pressure should be at least 1,470 kPa (15 kgf/cm^2, 213 psi). If the pressure is too high, repair or replace the pump.

11. Lower the engine speed and let it idle. Close the shut-off valve, then close the pressure control valve gradually until the pressure gauge needle is stable. Read the pressure.

    NOTICE
    Do not keep the shut-off valve closed more than 5 seconds or the pump could be damaged by overheating.

12. Immediately open the shut off valve fully. If the pump is in good condition, the gauge should read at least this specification:

    K20A2 engine model:
    7,160—7,850 kPa (73—80 kgf/cm^2, 1,040—1,140 psi)
    K20Z1 engine model:
    7,360—8,040 kPa (75—82 kgf/cm^2, 1,070—1,170 psi)
    K20A3 engine model:
    6,570—7,260 kPa (67—74 kgf/cm^2, 950—1,050 psi)

    A low reading means pump output is too low for full assist. Repair or replace the pump (see page 17-14).

Pump Pressure Test with T/N 07406-001000A

Special Tools Required
- P/S joint adapter (pump) 07VAK-P8A011A
- P/S joint adapter plate (pump) 07ZAK-S7CA100
- P/S joint adapter (hose) 07ZAK-S7CA200
- P/S pressure gauge 07406-001000A

Check the fluid pressure as follows to determine whether the trouble is in the pump or gearbox.

1. Check the power steering fluid level (see page 17-12).

2. Disconnect the pump outlet hose (A) from the pump outlet with care so as not to spill the power steering fluid on the frame and other parts. Install the P/S joint adapter (pump) on the pump outlet (B).

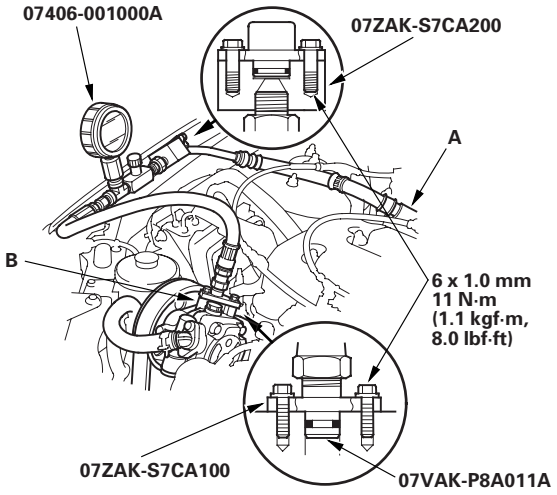

3. Connect the P/S joint adapter (hose) to the P/S pressure gauge, then connect the pump outlet hose (A) to the P/S joint adapter (hose).

4. Install the P/S pressure gauge to the P/S joint adapter (pump).

5. Open the shut off valve (A) fully.

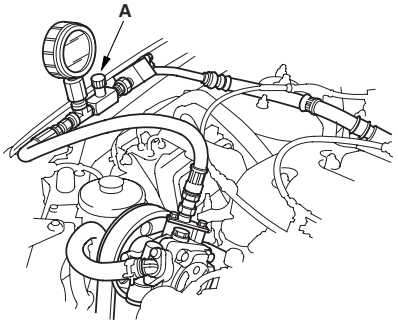

6. Start the engine and let it idle.

7. Turn the steering wheel from lock-to-lock several times to warm the fluid to operating temperature at 158 °F (70 °C).

8. Measure steady-state fluid pressure while the engine is idling. If the pump is in good condition, the pressure should be no more than 1,470 kPa (15 kgf/cm^2, 213 psi). If the pressure is too high, check for:

   - Clogged or deformed feed or return line between the pump and gearbox.
   - Clogged valve body unit.

9. Raise the engine speed to 3,000 rpm, and measure the fluid pressure. If the pump is in good condition, the pressure should be at least 1,470 kPa (15 kgf/cm^2, 213 psi). If the pressure is too high, repair or replace the pump.

10. Lower the engine speed and let it idle. Close the shut off valve gradually. Read the pressure.

    NOTICE
    Do not keep the shut off valve closed more than 5 seconds or the pump could be damaged by overheating.

11. Immediately open the shut off valve fully. If the pump is in good condition, the gauge should read at least this specification:

    K20A2 engine model:
    7,160—7,850 kPa (73—80 kgf/cm^2, 1,040—1,130 psi)
    K20Z1 engine model:
    7,360—8,040 kPa (75—82 kgf/cm^2, 1,070—1,170 psi)
    K20A3 engine model:
    6,570—7,260 kPa (67—74 kgf/cm^2, 960—1,060 psi)

    A low reading means pump output is too low for full assist. Repair or replace the pump (see page 17-14).

Fluid Leakage Inspection

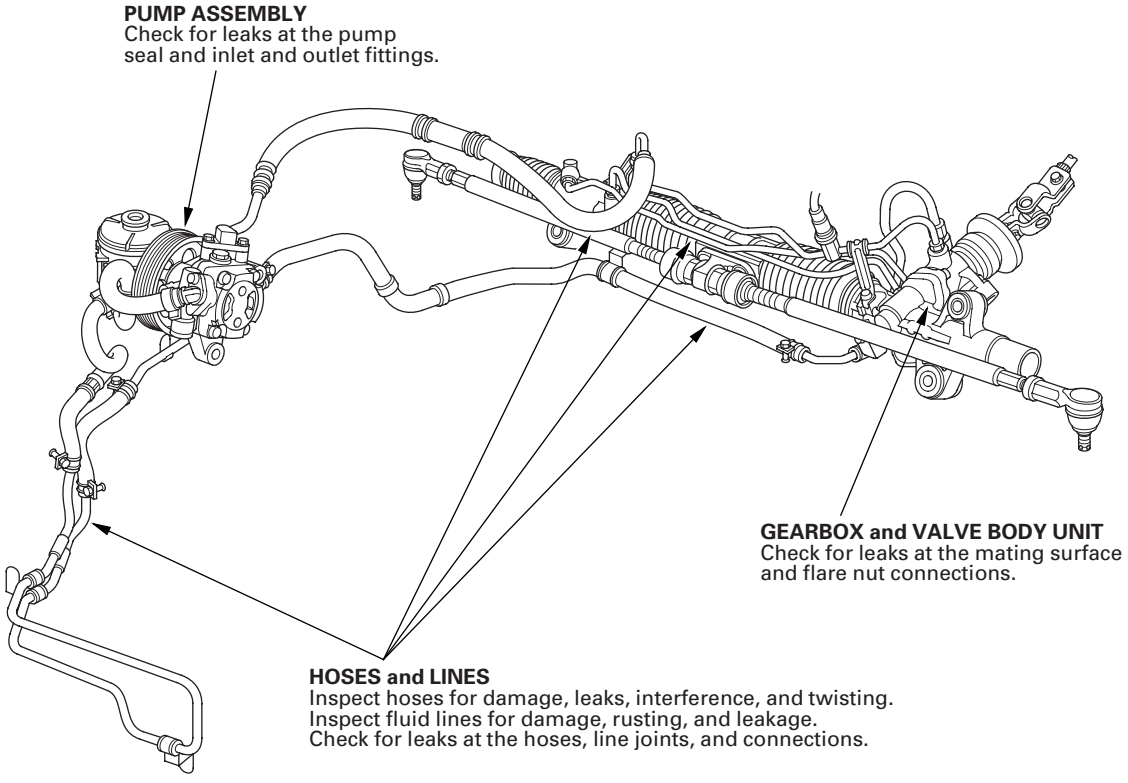

Fluid Replacement

Check the reservoir (A) at regular intervals, and add the recommended fluid as necessary. Always use ACURA Power Steering Fluid. Using any other type of power steering fluid or automatic transmission fluid can cause increased wear and poor steering in cold weather.

System capacity:
K20A3 engine model:
M/T model: 0.7 L (0.74 US. qt) at disassembly
A/T model: 0.8 L (0.85 US. qt) at disassembly
K20A2 engine model:
0.7 L (0.74 US. qt) at disassembly
K20Z1 engine model:
0.8 L (0.85 US. qt) at disassembly

Reservoir capacity:
0.2 L (0.21 US. qt)

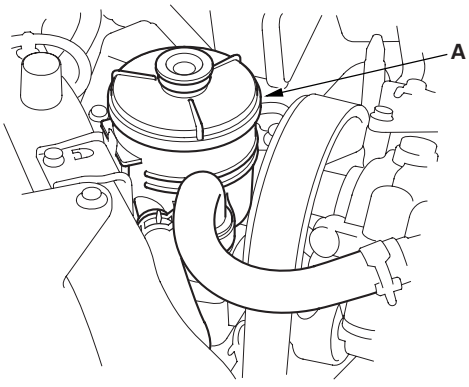

1. Raise the reservoir, then disconnect the return hose (A) to drain the reservoir. Take care not to spill the fluid on the body and parts. Wipe off any spilled fluid at once.

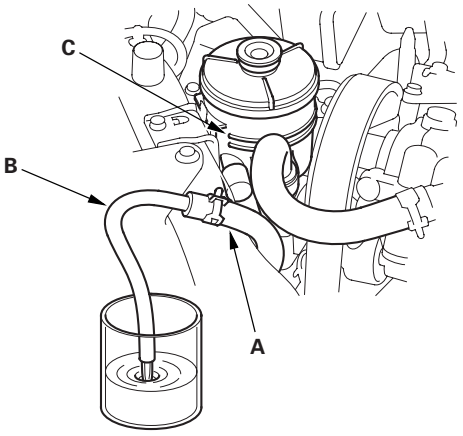

2. Connect a hose (B) of suitable diameter to the disconnected return hose, and put the hose end in a suitable container.

3. Start the engine, let it run at idle, and turn the steering wheel from lock-to-lock several times. When fluid stops running out of the hose, shut off the engine. Discard the fluid.

4. Reinstall the return hose on the reservoir.

5. Fill the reservoir to the upper level line (C).

6. Start the engine and run it at fast idle, then turn the steering from lock-to-lock several times to bleed air from the system.

7. Recheck the fluid level and add more fluid if necessary. Do not fill the reservoir beyond the upper level line.

8. If the fluid is contaminated, dark, or discolored, repeat this procedure as necessary.

Power Steering Hose, Line, and Pressure Switch Replacement

Note these items during installation:

- Connect each hose to the corresponding line securely until it contacts the stop on the line. Install the clamp or adjustable clamp at the specified distance from the hose end as shown.
- Check all clamps for deterioration or deformation; replace with new clamps, if necessary.
- Add the recommended power steering fluid to the specified level on the reservoir and check for leaks.

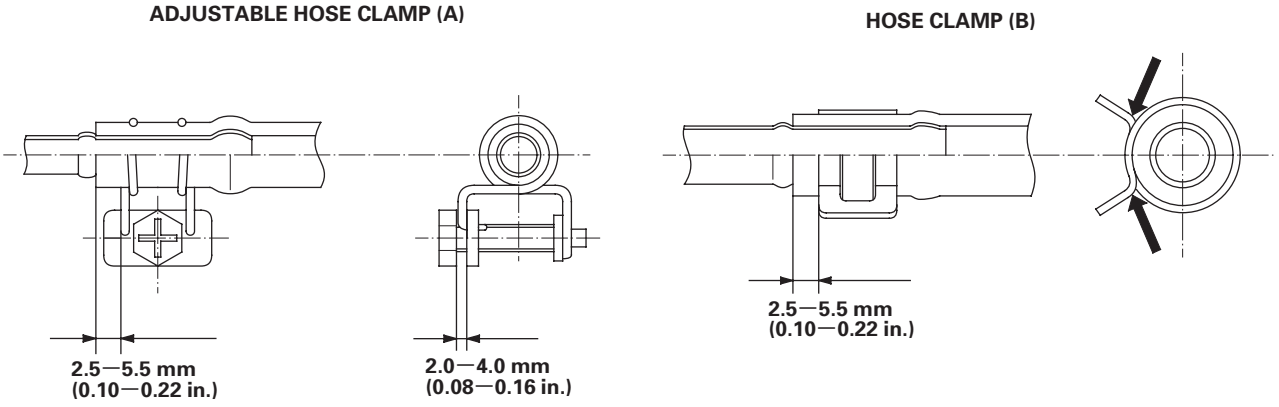

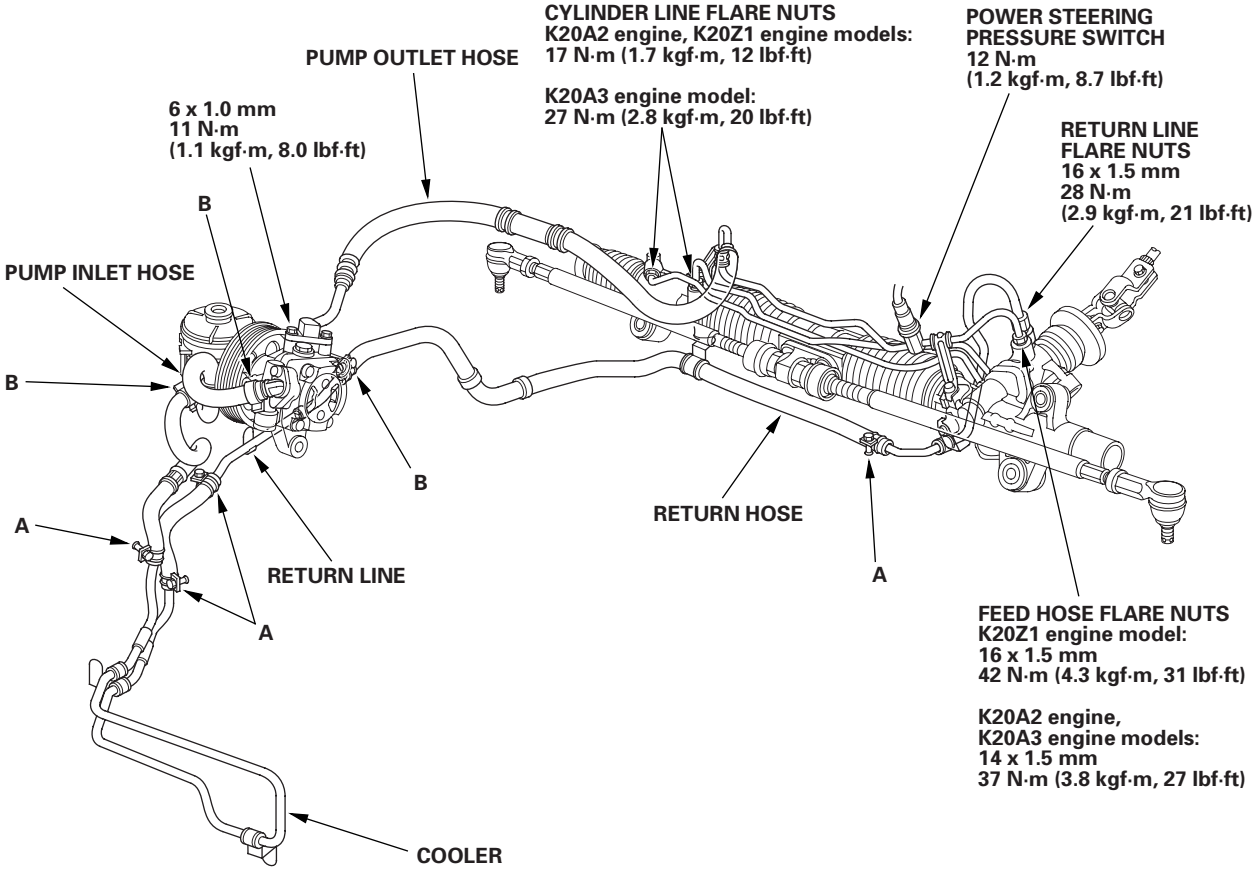

Pump Replacement

1. Place a suitable container under the vehicle.

2. Drain the power steering fluid from the reservoir (see page 17-12).

3. Remove the drive belt (A) from the pump pulley (see page 4-43).

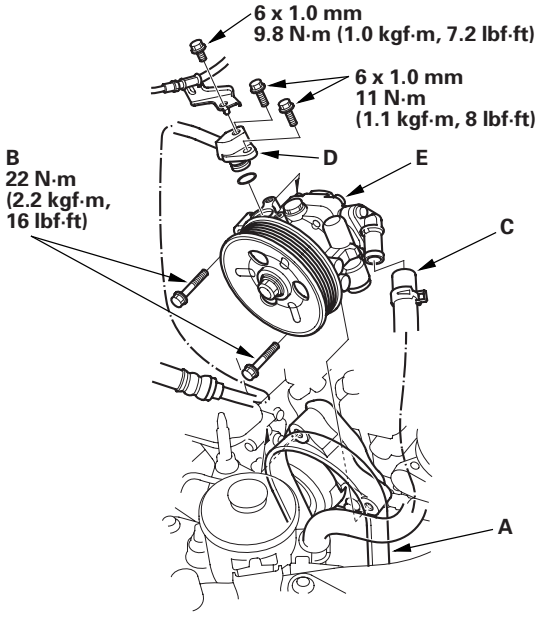

4. Cover the auto-tensioner, alternator and A/C compressor with several shop towels to protect them from spilled power steering fluid. Disconnect the pump inlet hose (C) and the pump outlet hose (D) from the pump (E), and plug them. Take care not to spill the fluid on the body or parts. Wipe off any spilled fluid at once. Do not turn the steering wheel with the pump removed.

5. Remove the pump mounting bolts (B).

6. Cover the opening of the pump with a piece of tape to prevent foreign material from entering the pump.

7. Install the pump in the pump bracket with the mounting bolts.

8. Connect the pump inlet hose and the pump outlet hose with new O-ring.

9. Install the drive belt (A).

   Note these item during drive belt installation:
   - Make sure that the drive belt is properly positioned on the pulleys (B).
   - Do not get power steering fluid or grease on the auto-tensioner, alternator, A/C compressor and drive belt, or pulley faces. Clean off any fluid or grease before installation.

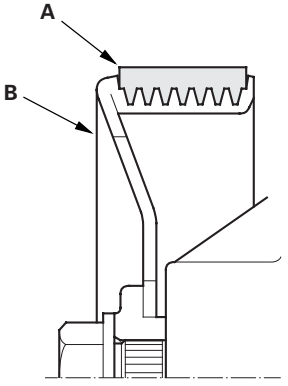

10. Fill the reservoir to the upper level line with recommended power steering fluid (see page 17-12).

Pump Overhaul

Exploded View

Replace the pump as an assembly if the parts indicated with asterisk (*) are worn or damaged.

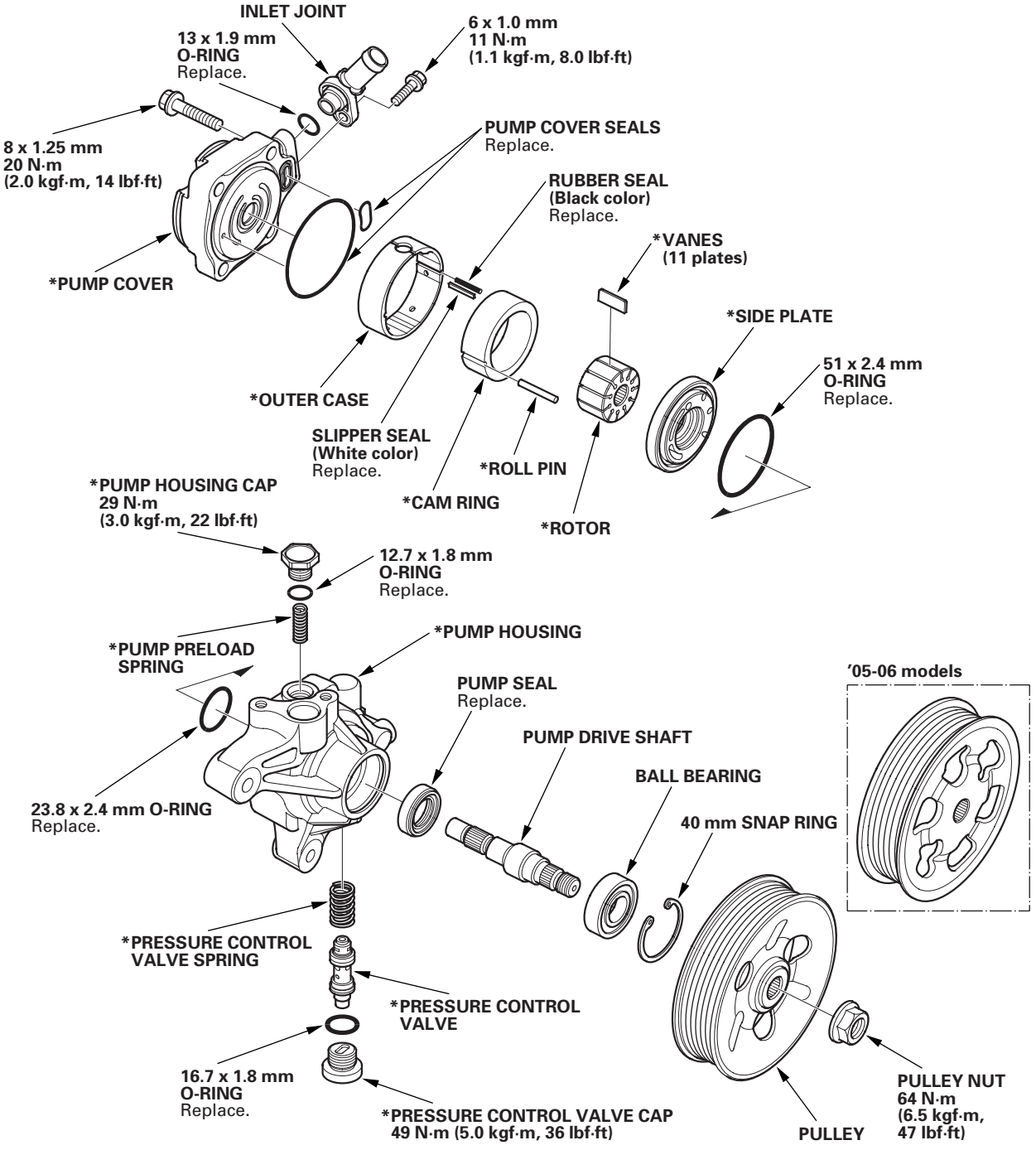

(cont'd)

Pump Overhaul (cont'd)

Special Tools Required
• Attachment, 32 x 35 mm 07746-0010100
• Driver 07749-0010000
• Pulley holder 07ZAB-S5A0100

Disassembly

NOTE: Refer to the Exploded View as needed during the following procedure.

1. Drain the fluid from the power steering pump by turning the pulley.

2. Remove the power steering pump (see page 17-14).

3. Hold the power steering pump (A) in a vise with soft jaws (B), hold the pulley (C) with the special tool (D), and remove the pulley nut (E) and pulley. Be careful not to damage the pump housing with the jaws of the vise.

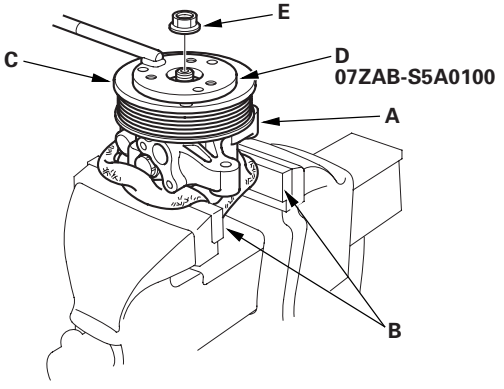

4. Remove the inlet joint and O-ring.

5. Remove the pressure control valve cap, O-ring, the pressure control valve spring, and pressure control valve.

6. Remove the pump housing cap, O-ring, and pump preload spring.

7. Remove the pump cover and pump cover seals.

8. Pull out the roll pin.

9. Remove the outer case, cam ring, rotor, vanes, and side plate.

10. Remove the rubber seal and slipper seal from the outer case.

11. Remove the O-rings from the bottom of the housing.

12. Remove the snap ring, then remove the pump drive shaft by tapping the shaft end with the plastic hammer.

13. Remove the pump seal from the pump housing.

Inspection

14. Check the pressure control valve for wear, burrs, and other damage to the edges of the grooves in the valve.

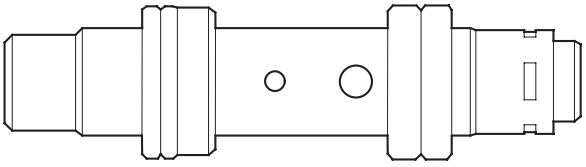

15. Inspect the bore of the pressure control valve on the pump housing for scratches and wear.

16. Slip the pressure control valve back in the pump housing, and check that it moves in and out smoothly. If OK, go to step 17; if not, replace the pump as an assembly. The pressure control valve is not available separately.

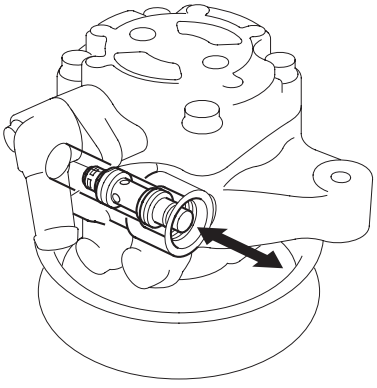

17. Attach a hose (A) to the end of the pressure control valve (B) as shown. Then submerge the pressure control valve in a container of power steering fluid or solvent (C), and blow in the hose.

    - If air bubbles leak through the valve at less than 98 kPa (1.0 kgf/cm^2, 14.2 psi), replace the pump as an assembly. The pressure control valve is not available separately.
    - If the pressure control valve is OK, set it aside for reassembly later.

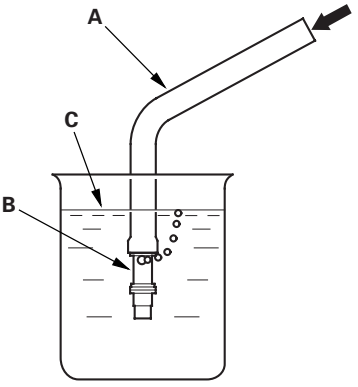

18. Inspect the ball bearing by rotating the outer race slowly. If you feel any play (axial or radial) or roughness, remove the faulty ball bearing (A), and install a new one (B).

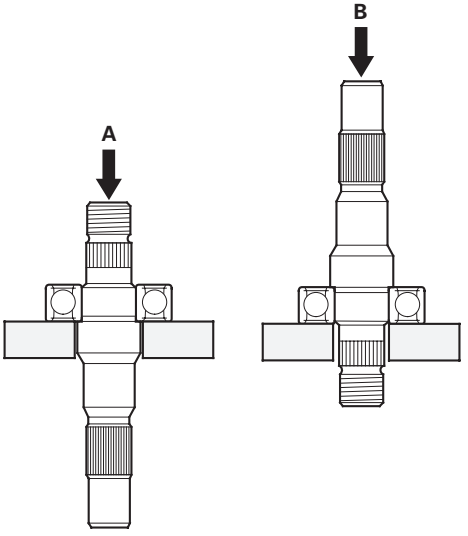

19. Inspect each part shown with an asterisk in the Exploded View; if any of them are worn or damaged, replace the pump as an assembly.

(cont'd)

Pump Overhaul (cont'd)

Reassembly

20. Install the new pump seal (A) (with its grooved side facing in) into the pump housing (B) by hand first, then drive it in using the special tools until there is no step at the top of the pump seal, and the seal is fully seated in the pump housing.

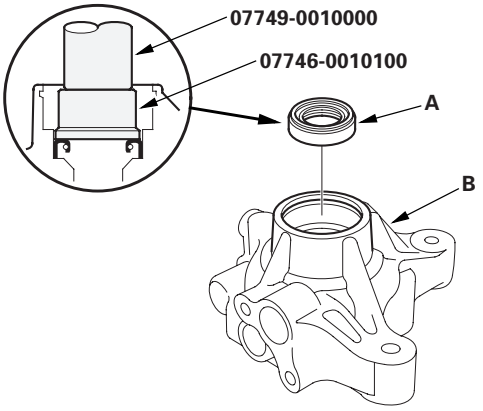

21. Position the pump drive shaft (A) in the pump housing, then press it in with the appropriate size socket wrench (B) as shown. Do not apply more than 1,370 N (140 kgf, 308 lbf) of pressure.

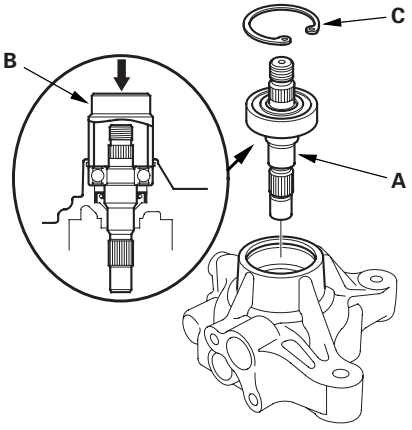

22. Install the 40 mm snap ring (C) with its radiused side facing out.

23. Coat the new 23.8 mm O-ring (A) with power steering fluid, then position it on the bottom (B) of the pump housing.

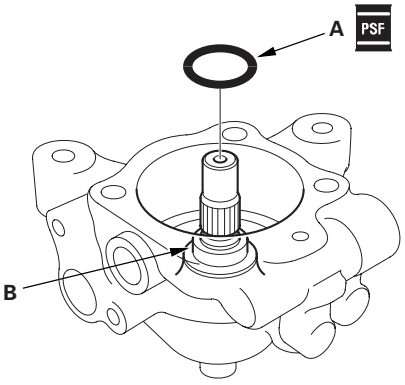

24. Coat the new cover seal (A), cover seal (B) with power steering fluid, then position them into the grooves on the cover (C).

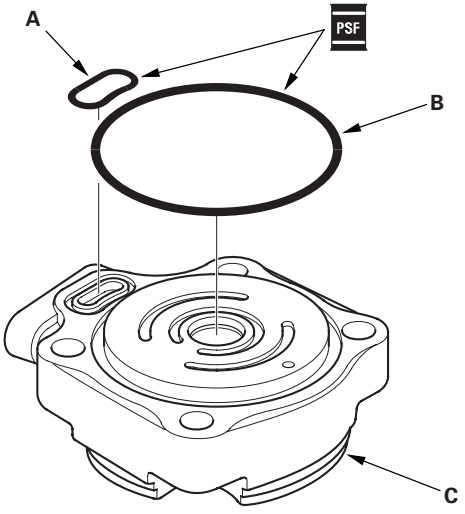

25. Install the outer case (A) by aligning the slot (B) inside the outer case with the cover roll pin hole (C). Be sure that the slit (D) on the outer case is in the direction shown.

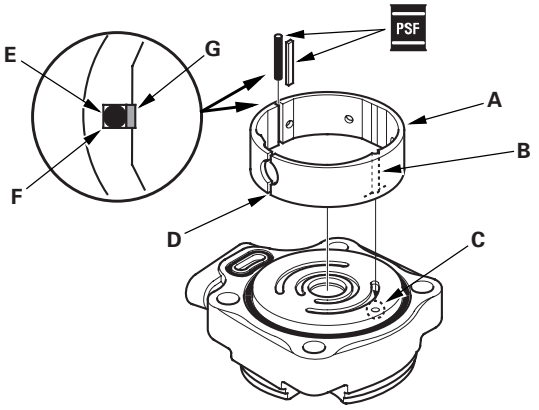

26. Apply power steering fluid to the rubber seal (E) (black), and install it in the slot (F) of the outer case.

27. Apply power steering fluid to the slipper seal (G) (white), and install it on top of the rubber seal you just installed.

28. Install the cam ring (A) by aligning the slot (B) with the slot (C) in the outer case.

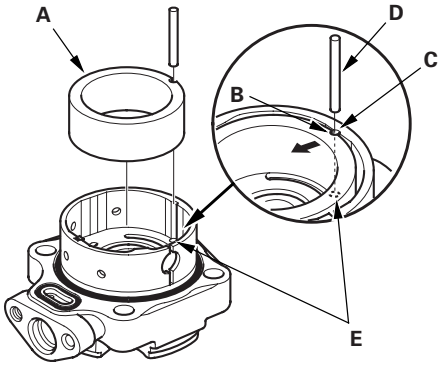

29. Insert the roll pin (D) into the slots between the cam ring and outer case, then push the roll pin into the set hole (E).

30. Install the rotor (A) in the cam ring (B).

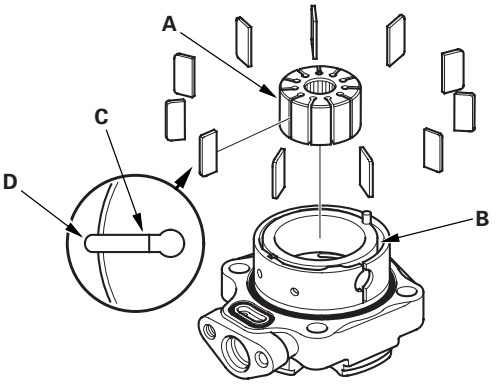

31. Set the 11 vanes (C) in the grooves in the rotor. Make sure that the round ends (D) of the vanes are in contact with the sliding surface of the cam ring.

(cont'd)

Pump Overhaul (cont'd)

32. Place the side plate (A) on the cam ring, and align the roll pin set hole (B) in the side plate with the roll pin end (C).

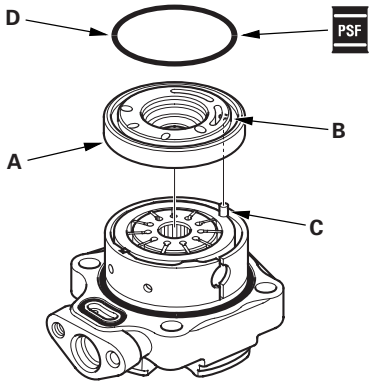

33. Coat the new 51 mm O-ring (D) with power steering fluid, then position it into the groove on the side plate.

34. Install the pump housing (A) over the cover assembly (B).

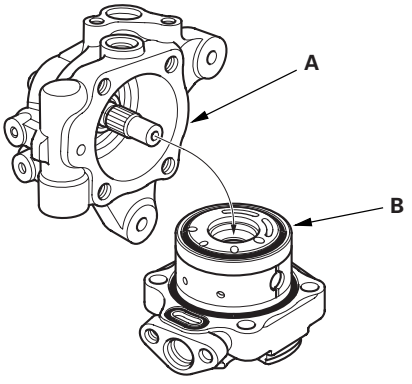

35. Align the bolt holes in the cover (A) with the threaded holes in the pump housing. Install the flange bolts loosely first, then torque the flange bolts in a criss cross pattern in two or more steps.

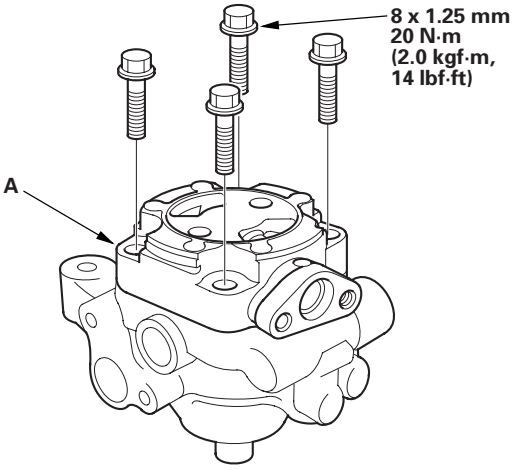

36. Push in the cam ring (A) from the pump housing cap hole (B) with a flat blade screwdriver, to make sure the cam ring is fully seated against the outer case.

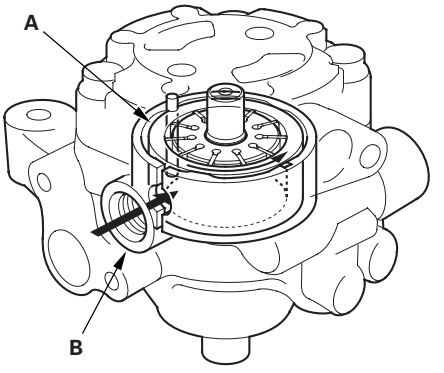

37. Install the pump preload spring (A) in the pump housing.

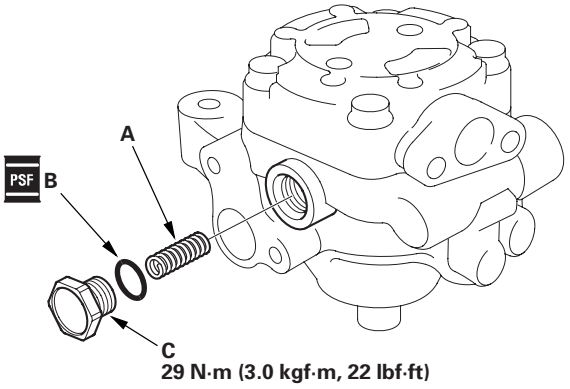

38. Coat the new 12.7 mm O-ring (B) with power steering fluid, and install it on the pump housing cap (C).

39. Install the pump housing cap on the pump housing, and tighten it to the specified torque.

40. Install the pressure control valve spring (A) in the pump housing.

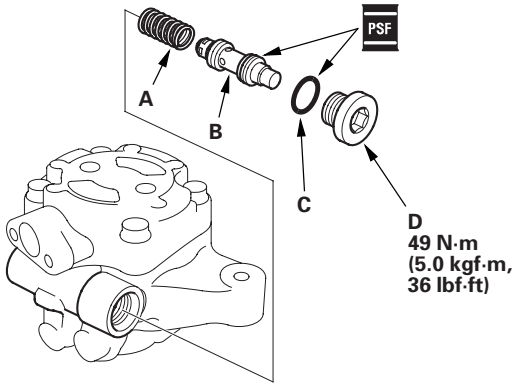

41. Coat the pressure control valve (B) with power steering fluid, and install it on the pump housing.

42. Coat the new 16.7 mm O-ring (C) with power steering fluid, and install it on the flow control valve cap (D).

43. Install the flow control valve cap on the pump housing, and tighten it to the specified torque.

44. Coat the new 13 mm O-ring (A) with power steering fluid, and install it on the inlet joint (B).

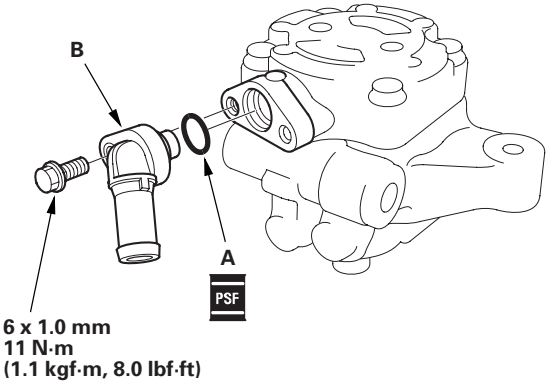

45. Install the inlet joint on the pump housing.

46. Install the pulley (A), then loosely install the pulley nut (B). Hold the power steering pump in a vise with soft jaws (C). Be careful not to damage the pump housing with the jaws of the vise.

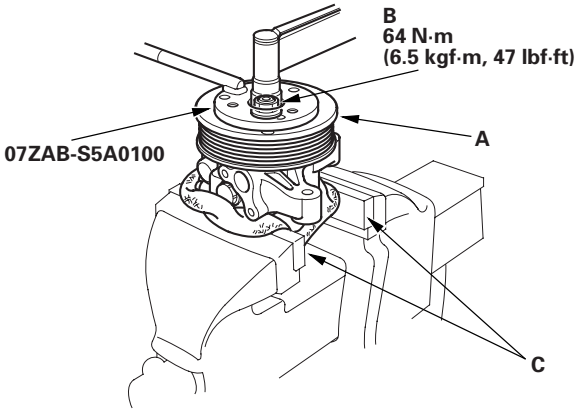

47. Hold the pulley with the special tool, and tighten the pulley nut to the specified torque.

48. Check that the pump turns smoothly by turning the pulley. If it turns hard, loosen the four flange bolts on the cover, then try retightening them in the same manner as in the step 35.

49. Reinstall the power steering pump (see page 17-14).

Steering Wheel Removal

SRS components are located in this area. Review the SRS component locations (see page 23-10) and precautions and procedures (see page 23-11) before performing repairs or service.

1. Make sure you have the anti-theft code for the radio, then write down the radio station presets.

2. Disconnect the negative cable from the battery.

3. Align the front wheels straight ahead, then remove the driver's airbag from the steering wheel (see page 23-130).

4. Disconnect the cruise control main switch connector (A), and loosen the steering wheel bolt (B).

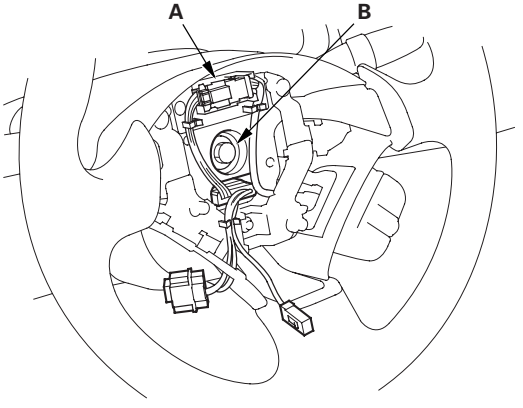

5. Install a commercially available steering wheel puller (A) on the steering wheel (B). Free the steering wheel from the steering column shaft by turning the pressure bolt (C) of the puller.

   Note these items when removing the steering wheel:
   - Do not tap on the steering wheel or the steering column shaft when removing the steering wheel.
   - If you thread the puller bolts (D) into the wheel hub more than five threads, the bolts will hit the cable reel and damage it. To prevent this, install a pair of jam nuts five threads up on each puller bolt.

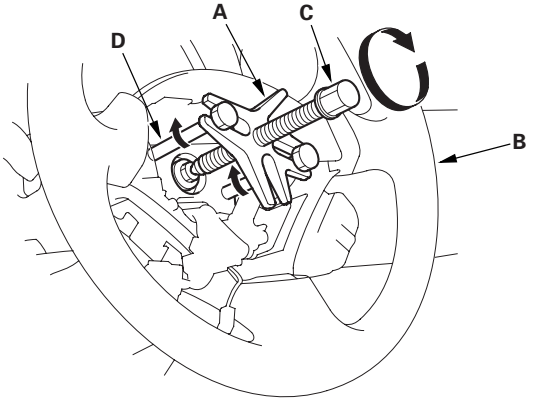

6. Remove the steering wheel puller, then remove the steering wheel bolt and steering wheel from the steering column.

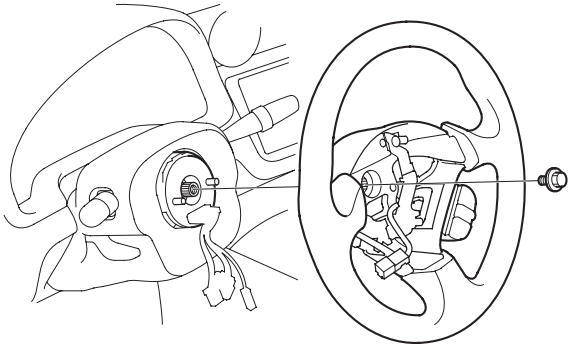

Steering Wheel Disassembly/Reassembly

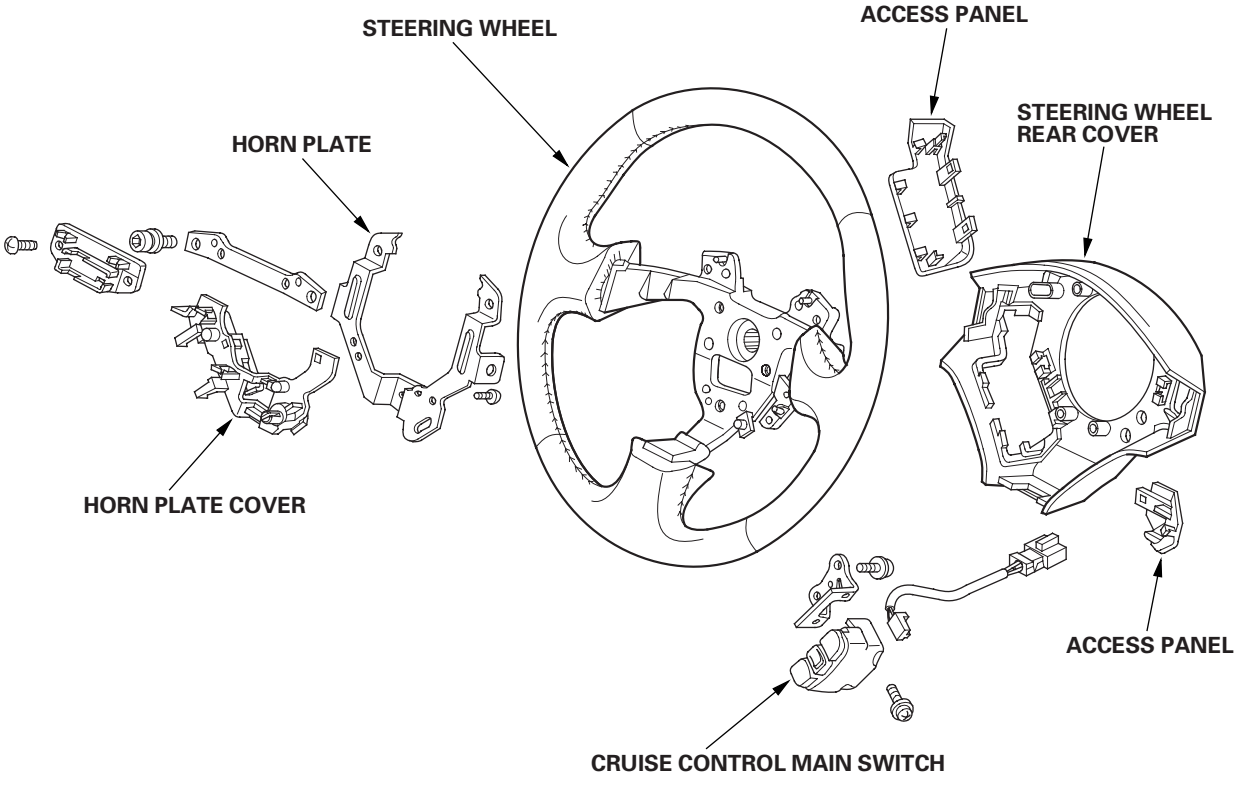

Steering Wheel Installation

1. Before installing the steering wheel, make sure the front wheels are aligned straight ahead, then center the cable reel (A). Do this by first rotating the cable reel clockwise until it stops. Then rotate it counterclockwise about two and a half turns. The arrow mark (B) on the cable reel label should point straight up.

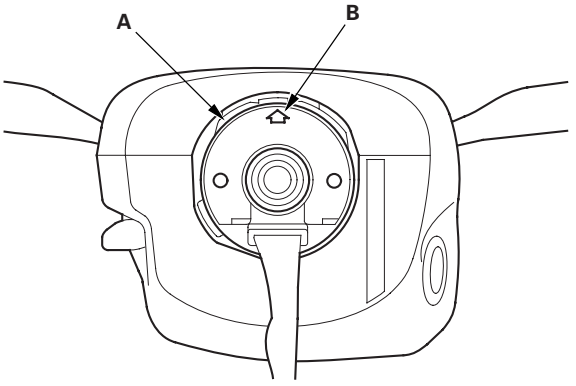

2. Position the two tabs (A) of the turn signal canceling sleeve (B) as shown, and install the steering wheel on to the steering column shaft, making sure the steering wheel hub (C) engages the pins (D) of the cable reel and tabs of the turn signal canceling sleeve. Do not tap on the steering wheel or steering column shaft when installing the steering wheel.

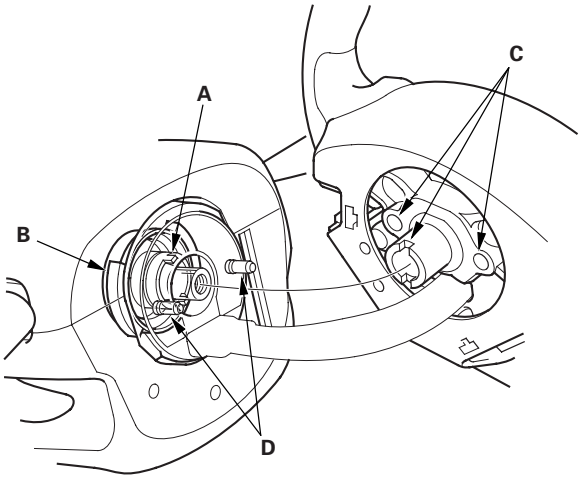

3. Install the steering wheel bolt (A) and tighten it.

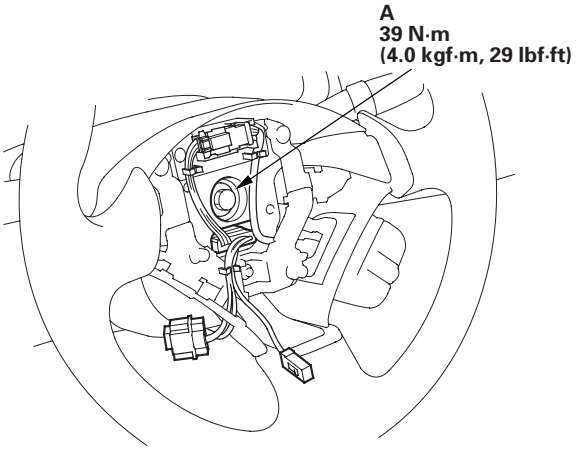

4. Connect the cruise control main switch connector.

5. Install the driver's airbag, and confirm that the system is operating properly (see page 23-131).

6. Check the horn and turn signal canceling for proper operation.

7. Reconnect the battery and do the following:

   - Power window control unit resetting procedure (see page 22-148).
   - ECM/PCM idle learn procedure (see page 11-349).
   - Enter the anti-theft code for the radio, then enter the customer's radio station presets.
   - Set the clock.

Steering Column Removal and Installation

SRS components are located in this area. Review the SRS component locations (see page 23-10) and precautions and procedures (see page 23-11) before performing repairs or service.

Removal

1. Record the radio station presets, and disconnect the battery.

2. Remove the driver's airbag assembly and the steering wheel (see page 17-22).

3. Remove the driver's dashboard lower cover (see page 20-63), and the driver's dashboard under cover (see page 20-63).

4. Remove the column covers (A).

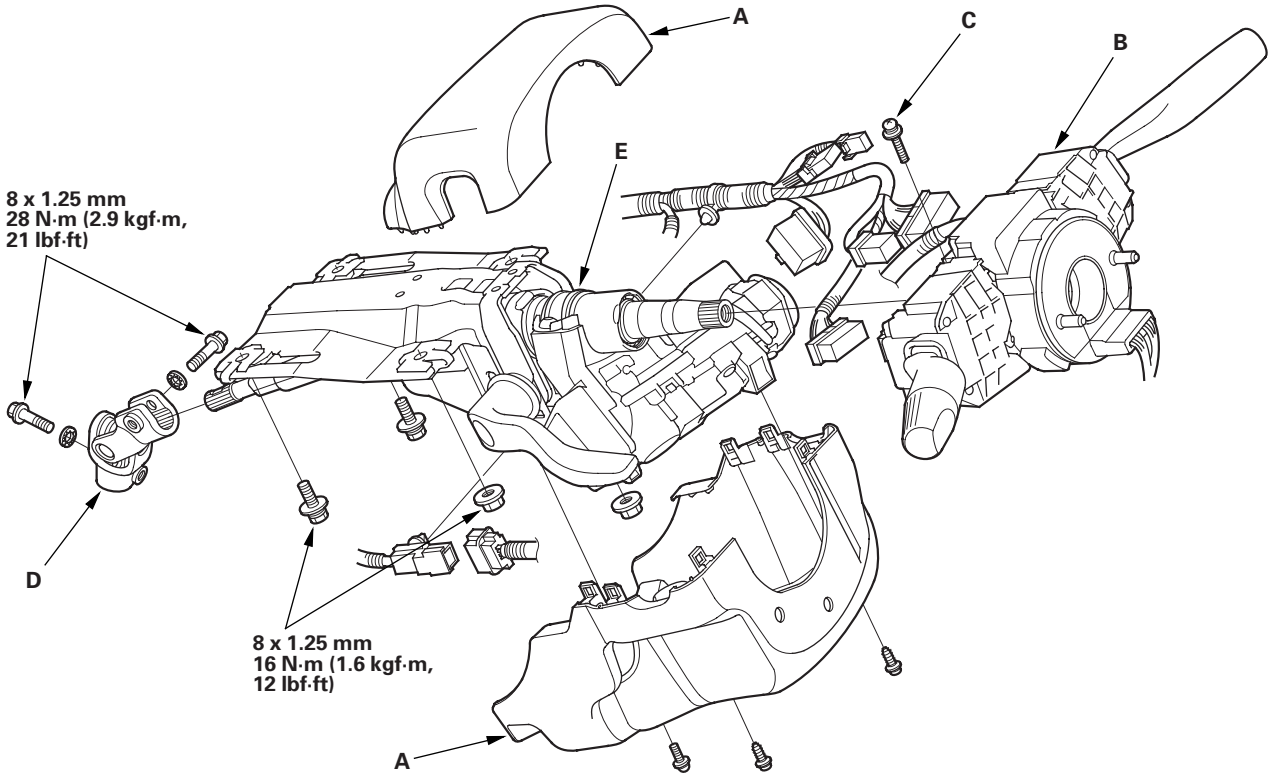

5. Remove the combination switch assembly (B) from the steering column shaft by removing the screw (C) on the top of the combination switch. Disconnect the 5P, 14P, and 16P connectors from the switch.

6. Disconnect the 6P and two 7P connectors from the ignition switch. Disconnect the harness clips from the steering column.

7. Disconnect the steering joint (D), and remove it from the column shaft.

8. Remove the steering column (E) by removing the attaching nuts and bolts.

(cont'd)

Steering Column Removal and Installation (cont'd)

Installation

1. Install the steering column in the reverse order of removal, and note these items:

   - Take care not to let the sliding capsules fall out of the position during column installation.
   - Make sure the wires are not caught or pinched by any parts.

2. Insert the upper end of the steering joint onto the steering shaft (A) (line up the bolt hole (B) with the flat portion (C) on the shaft).

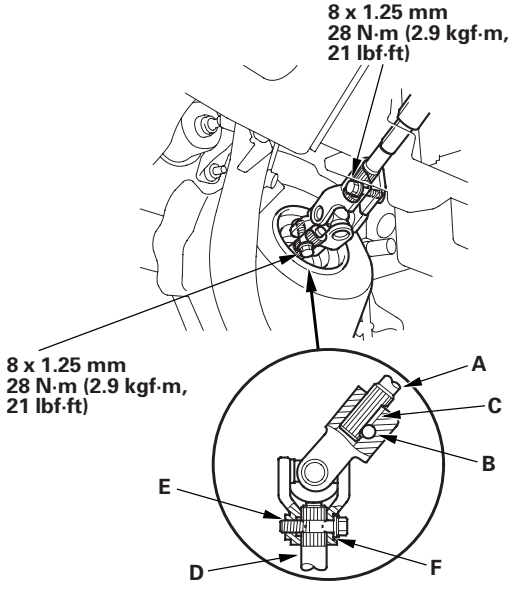

3. Slip the lower end of the steering joint onto the pinion shaft (D) (line up the bolt hole (E) with the groove (F) around the shaft), and loosely install the lower joint bolt. Be sure that the lower joint bolt is securely in the groove in the pinion shaft.

4. Pull on the steering joint to make sure that the steering joint is fully seated. Then install the upper joint bolt and tighten both bolts to the specified torque .

5. Install the driver's dashboard lower cover (see page 20-63).

6. Install the driver's dashboard under cover (see page 20-63).

7. Finish the installation, and note these items:

   - Make sure the wire harness is routed and fastened properly.
   - Make sure the connectors are properly connected.
   - Reinstall the steering wheel (see page 17-24).
   - Reconnect the battery.
   - 2002-2004 models: Do the ECM/PCM idle learn procedure (see page 11-349).
   - Do the power window control unit reset procedure (see page 22-148).
   - Enter the anti-theft code for the radio, then enter the customer's radio station presets.
   - Set the clock.
   - Verify horn and turn signal switch operation.

Steering Column Tilt Operation Check

1. Set the steering wheel in the straight driving position, and loosen the tilt lever fully.

2. Attach the spring scale to the highest point of the steering wheel, and set the tilting position at the lowest.

3. Pull the spring scale straight up, and read the operation load during tilting.

4. Attach the spring scale to the lowest point of the steering wheel.

5. Pull the spring scale straight down, and read the operation load during tilting.

   Tilting load (upward/downward):
   Standard: 68 N (7.0 kgf, 15 lbf) or below

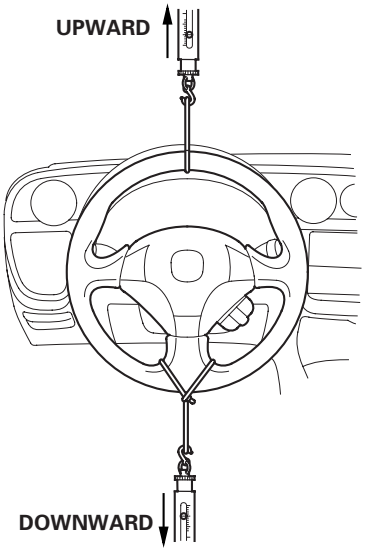

6. If the measurement is more than the specification, adjust the tilt lever preload (see page 17-29).

Steering Column/Tilt Lever Inspection/Adjustment

- Check the steering column ball bearing (A) and the steering joint bearings (B) for play and proper movement. If any bearing is noisy or has excessive play, replace the steering column as an assembly.
- Check the sliding capsules (C) for distortion and breakage. If there is distortion or breakage, replace the steering column as an assembly.

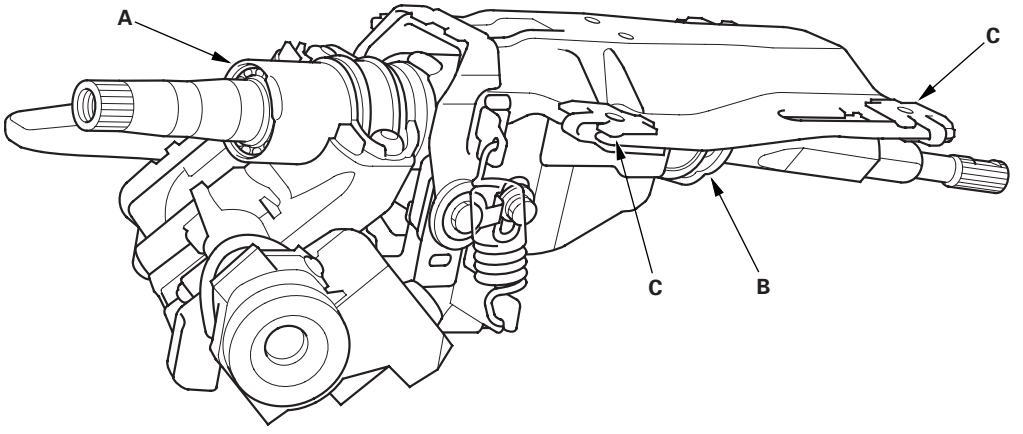

Tilt Lever Preload Inspection

1. Move the tilt lever (A) from the loose position to the lock position three to five times; then measure the tilt lever preload 10 mm (0.4 in.) from the end of the tilt lever.

   Preload: 70—90 N (7—9 kgf, 15—20 lbf)

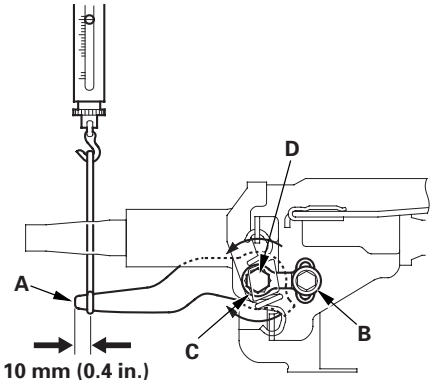

2. If the measurement is out of the specification, adjust the preload using the following procedures.

   - Loosen the tilt lever, and set the steering column in the neutral position.
   - Remove the 6 mm lock bolt (B), and remove the stop (C). Be careful not to loosen the tilt lever when installing the stop or tightening the 6 mm lock bolt.
   - Adjust the preload by turning the tilt lock bolt (D) left or right.
   - Pull up the tilt lever to the uppermost position, and install the stop. Check the preload again. If the measurement is still out of specification, repeat the above procedures to adjust.

Steering Lock Replacement

1. Remove the steering column (see page 17-25).

2. Center punch each of the two shear bolts, and drill their heads off with a 5 mm (3/16 in.) drill bit. Be careful not to damage the switch body when removing the shear bolts.

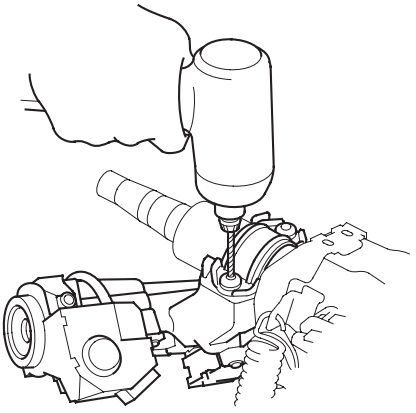

3. Remove the shear bolts from the switch body.

4. Install the switch body without the key inserted.

5. Loosely install the new shear bolts.

6. Insert the ignition key, and check for proper operation of the steering wheel lock and that the ignition key turns freely.

7. Tighten the shear bolts (A) until the hex heads (B) twist off.

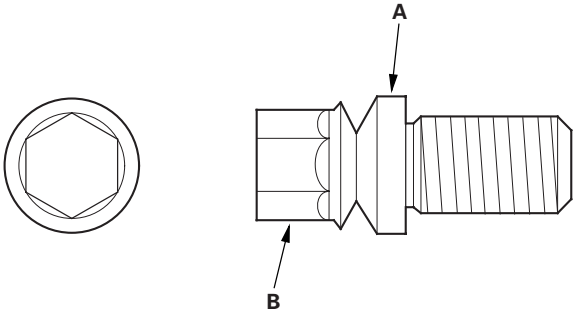

Rack Guide Adjustment

Special Tools Required
Locknut wrench, 40 mm 07916-SA50001

1. Set the wheels in the straight ahead position.

2. Remove the air cleaner (see page 11-407).

3. Remove the heat shield (A).

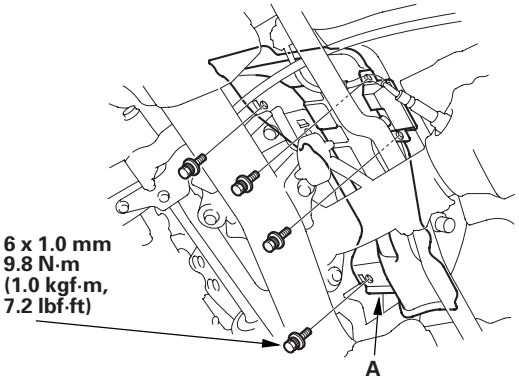

4. Remove the transmission mount bracket (see step 42 on page 5-8).

5. Under the steering gearbox, remove the return hose clamps (A).

Right side:

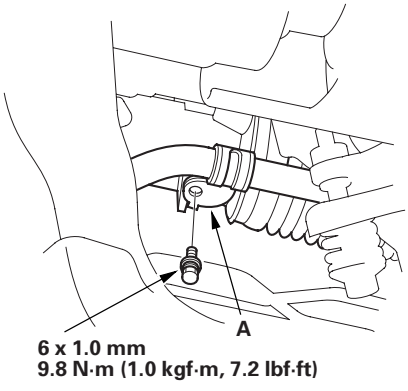

Left side:

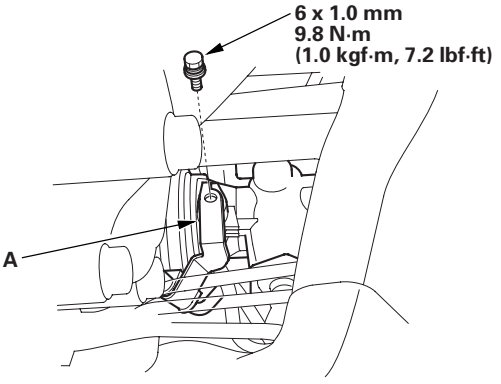

6. Loosen the rack guide screw locknut (A) with the special tool, then remove the rack guide screw (B).

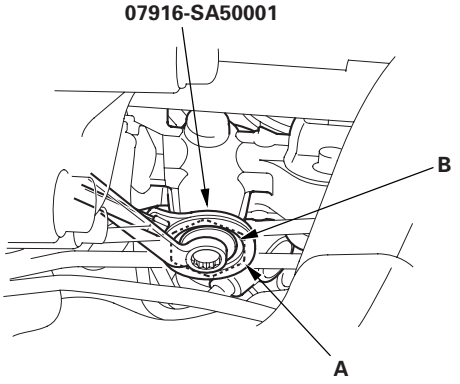

7. Remove the old sealant from the rack guide screw, and apply new sealant to the middle of the threads (A). Loosely install the rack guide screw on the steering gearbox.

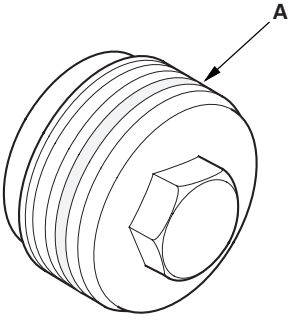

8. Tighten the rack guide screw (A) to 25 N·m (2.5 kgf·m, 18 lbf·ft), then loosen it.

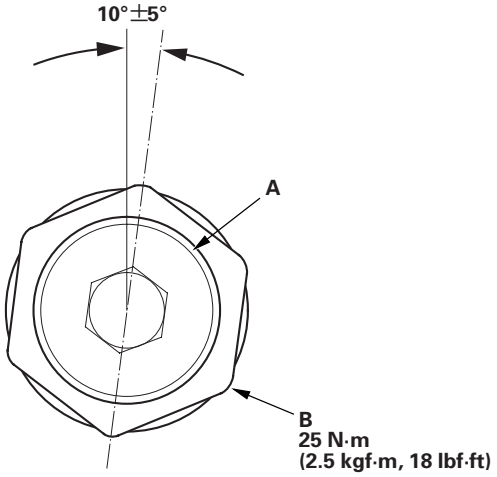

9. Retighten the rack guide screw to 4 N·m (0.4 kgf·m, 3 lbf·ft), then back it off to the specified angle.

   Specified return angle: 10°±5°

10. Hold the rack guide screw stationary with a wrench, and tighten the locknut by hand until it is fully seated.

11. Install the special tool on the locknut (B), and hold the rack guide screw stationary with a wrench. Tighten the locknut an additional 30° with the special tool.

12. Install the transmission mount bracket (see step 9 on page 5-14).

13. Reinstall the return hose clamps, heat shield, and air cleaner.

14. Check for unusual steering effort through the complete turning travel.

15. Check the steering wheel rotation play and the power assist (see page 17-7).

Steering Gearbox Removal

Special Tools Required
Ball joint remover, 28 mm 07MAC-SL0A202

Note these items during removal:
- Using solvent and a brush, wash any oil and dirt off the valve body unit, its lines, and the end of the gearbox. Blow dry with compressed air.
- Be sure to remove the steering wheel before disconnecting the steering joint. Damage to the cable reel can occur.

1. Make sure you have the anti-theft code for the radio, then write down the radio station presets.
2. Disconnect the negative cable from the battery.
3. Raise the front of vehicle, and support it with safety stands in the proper locations (see page 1-12).
4. Remove the front wheels.
5. Remove the driver's airbag and the steering wheel (see page 17-22).
6. Remove the driver's dashboard lower cover (see page 20-63), and the driver's dashboard under cover (see page 20-63).
7. Remove the steering joint bolts, and disconnect the steering joint by moving the steering joint (A) toward the column.

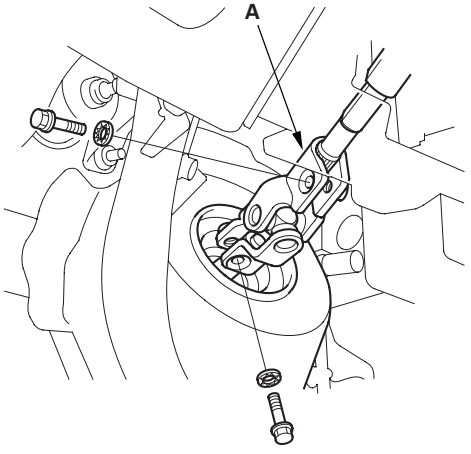

8. Remove the air cleaner (A) (see page 11-407).

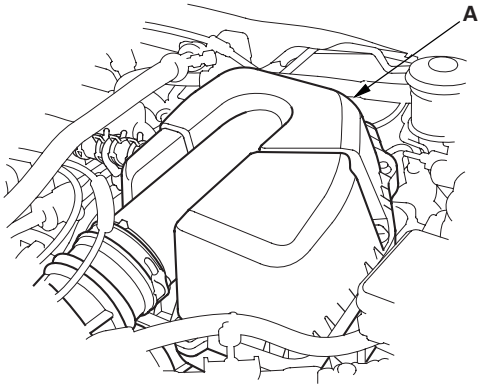

9. Remove the heat shield (A).

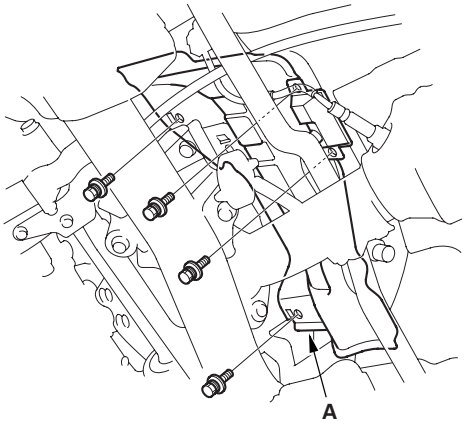

10. Remove the cotter pin (A) from the tie-rod ball joint nut (B), and loosen the nut.

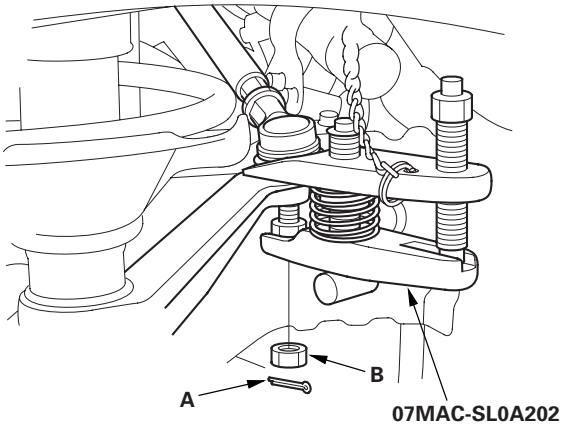

11. Separate the tie-rod ball joint from the damper steering arm using the special too (see page 18-10).

12. Remove the feed line clamp (A) and return hose clamp (B) from the left side of the gearbox.

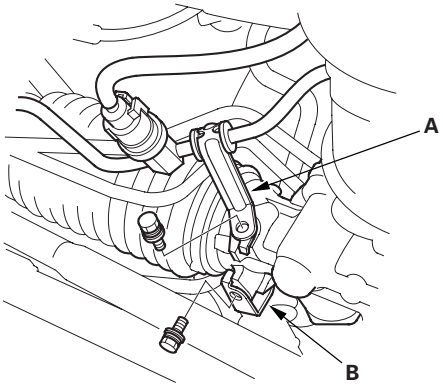

13. Disconnect the feed line (A) and return line (B) from the valve body unit.

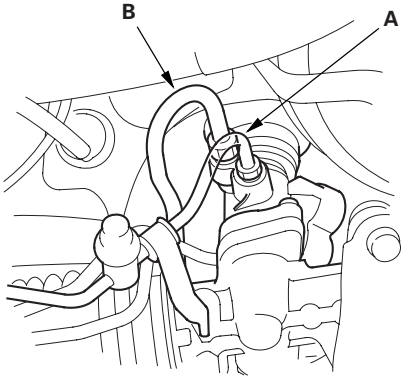

14. Remove the feed line clamp (A) and return hose clamp (B) from the right side of the gearbox.

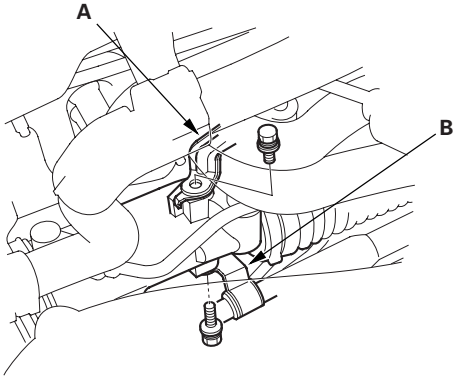

(cont'd)

Steering Gearbox Removal (cont'd)

15. Remove the body stiffener (A).

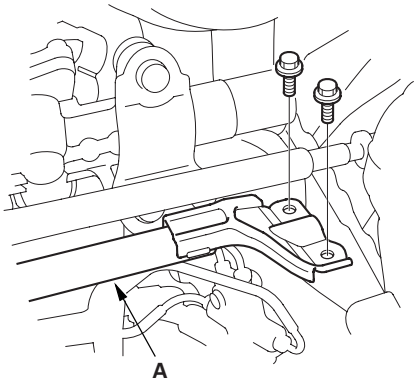

16. Remove the steering rack guard (A) by removing the three clips.

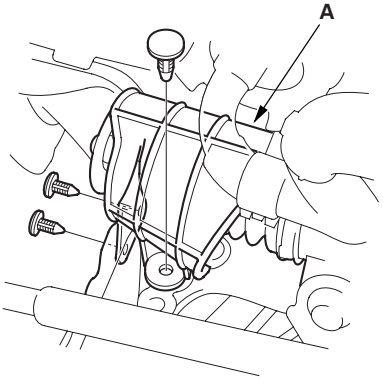

17. Remove steering stiffener B.

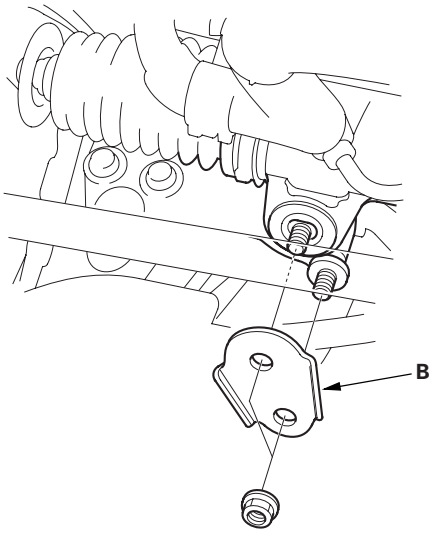

18. Remove steering stiffener A.

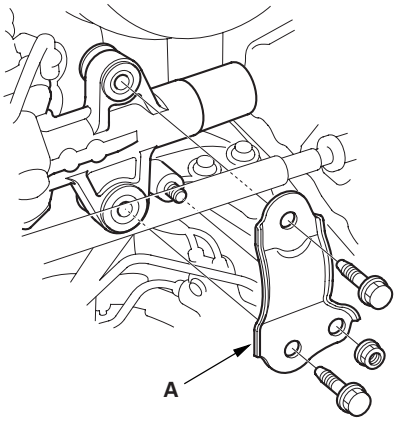

19. Lower the steering gearbox, and rotate it so the pinion shaft points upward.

20. Remove the pinion shaft grommet (A) from the top of the valve body unit.

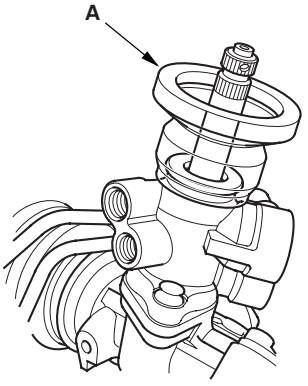

21. Carefully move the steering gearbox (A) and tie-rods (B) as an assembly toward the driver's side until the pinion shaft clears the wheelwell opening (C) on the frame.

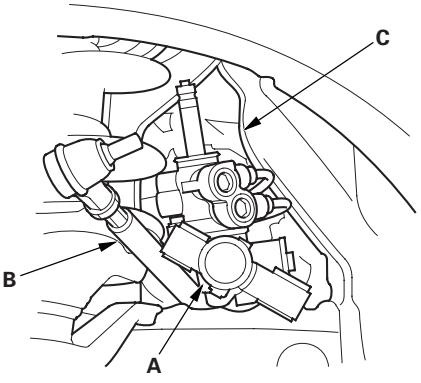

22. Remove the steering gearbox through the wheelwell opening on the driver's side.

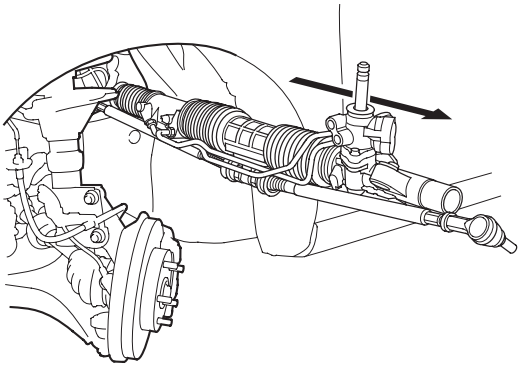

Steering Gearbox Overhaul

Exploded View

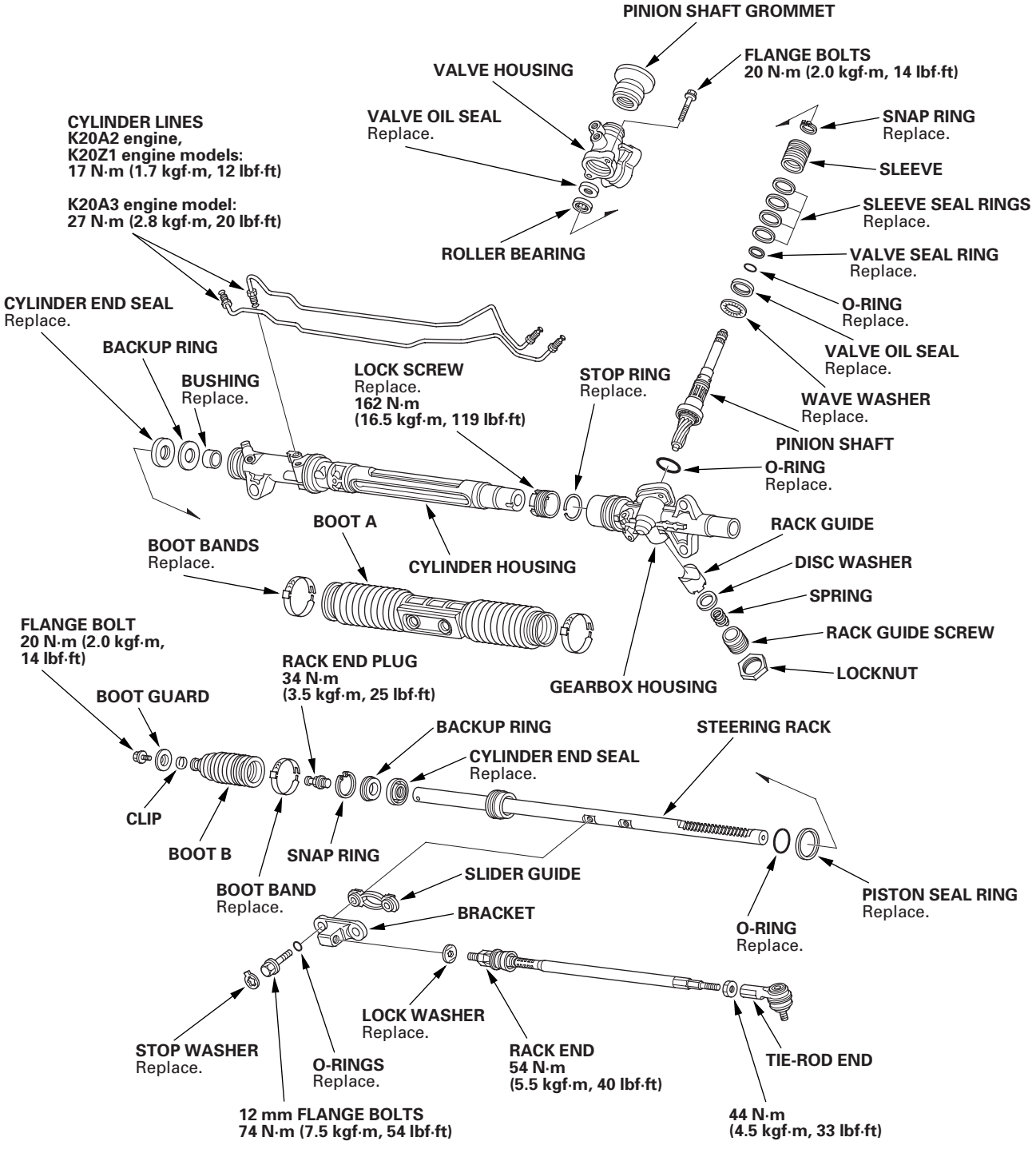

Special Tools Required
- Cylinder end seal remover attachment 07NAD-SR30200 or 07NAD-SR3020A
- Driver, 27 mm 07ZAF-S5A0100
- Valve seal ring sizing tool 07NAG-SR30900 or 07NAG-SR3090A
- Sleeve seal ring guide 07YAG-S2X0100
- Sleeve seal ring sizing tool, 36 mm 07ZAG-S5A0100
- Attachment, 32 x 35 mm 07746-0010100
- Driver 07749-0010000
- Piston seal ring guide, 42 mm 07ZAG-S7A0100
- Piston seal ring sizing tool, 42 mm 07ZAG-S7A0200
- Piston seal ring guide, 44 mm 07XAG-S0KA200
- Piston seal ring sizing tool, 44 mm 07XAG-S0KA100
- Pilot collar 07GAF-PH70100
- Locknut wrench 07ZAA-S5A0100
- Driver handle 07NAD-SR30101
- Cylinder end seal slider 07974-6890801 or 07974-689080A
- Valve seal ring guide 07ZAG-S5A0200
- Pincers, Oetiker 1098 or equivalent, commercially available

NOTE: Refer to the Exploded View as needed during this procedure.

Removal

1. Remove the steering gearbox (see page 17-32).

Disassembly

2. Remove cylinder lines (A) from the steering gearbox.

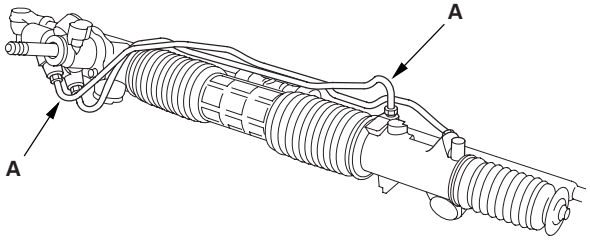

3. Drain the fluid from the cylinder fittings by slowly moving the steering rack back and forth.

4. Unbend the lock washers (A).

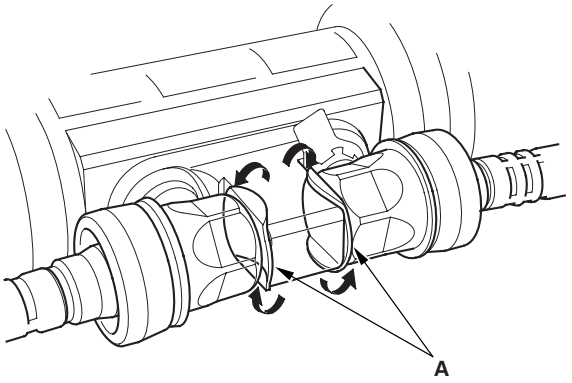

5. Hold the bracket (A) with one wrench, and unscrew both rack ends (B) with another wrench. Remove the lock washers.

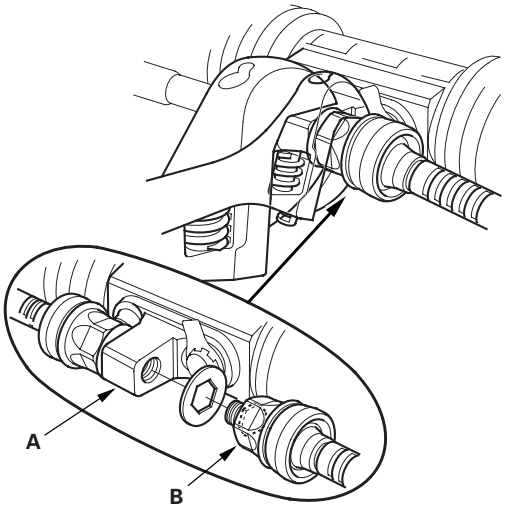

(cont'd)

Steering Gearbox Overhaul (cont'd)

6. Remove the stop washer (A), the 12 mm flange bolts (B), O-rings (C), and bracket (D) from the steering gearbox.

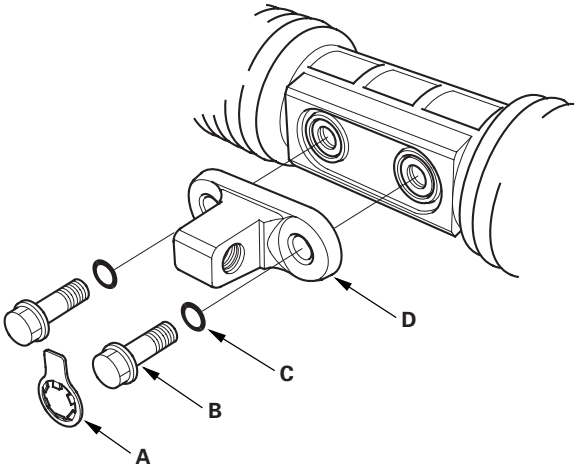

7. Remove the boot guard (A) by removing the 8 mm flange bolt (C) on the rack end.

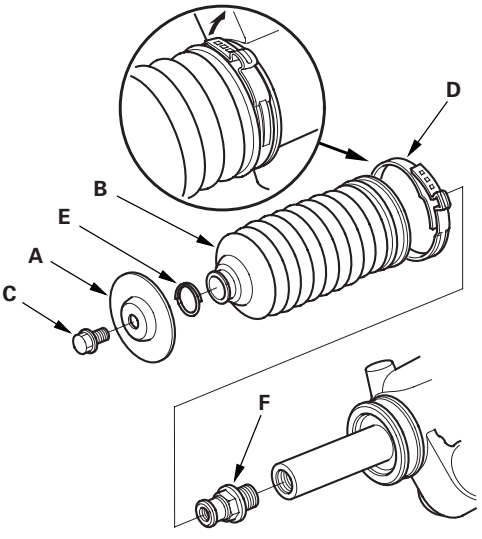

8. Remove the boot band (D) and clip (E). Pull the boot B away from the end of the steering gearbox. Remove the rack end plug (F).

9. Loosen the locknut (A), then remove the rack guide screw (B), spring (C), disc washer (D), and rack guide (E) from the steering gearbox.

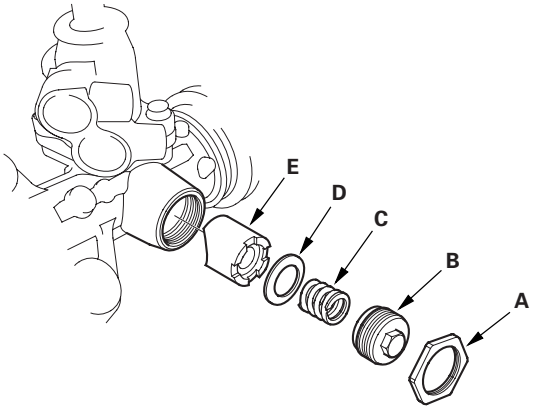

10. Remove the snap ring (A) and backup ring (B) from the cylinder housing.

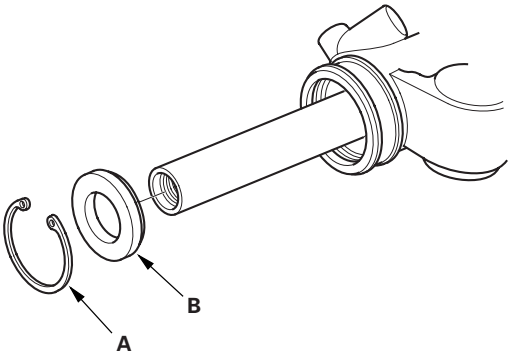

11. Remove the valve body unit (A) from the steering gearbox. Remove the O-ring (B) and discard it.

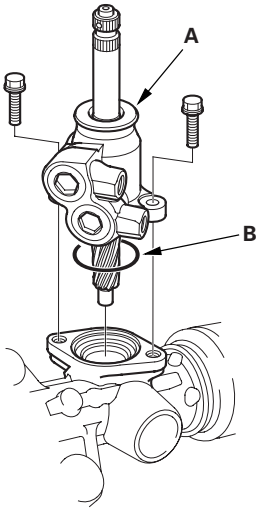

12. Remove the two boot bands (B) from boot A. Compress boot A by hand, and apply vinyl tape (C) so the boots stay collapsed and pulled back.

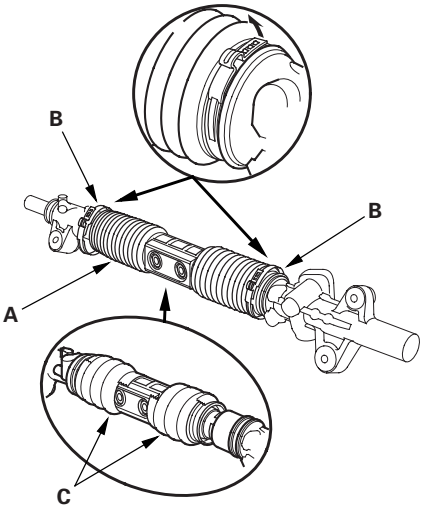

13. Hold the gearbox housing using a C-clamp (commercially available) (A) and the wooden blocks (B) as shown. Do not clamp the cylinder part of the housing or gearbox housing in the vise.

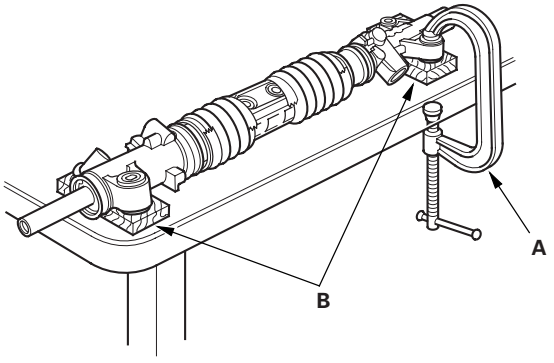

14. Install the special tool (A) on the lock screw (B), then loosen and remove the lock screw from inside of the gearbox housing (C).

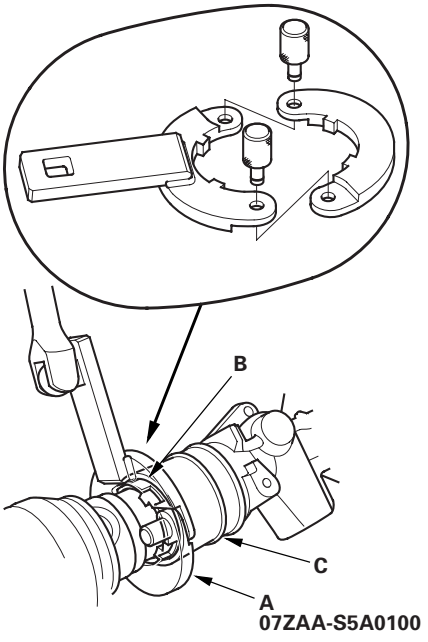

(cont'd)

Steering Gearbox Overhaul (cont'd)

15. Remove the special tool.

16. Pull on the cylinder to remove it from the gearbox housing. Remove boot A and the slider guide (B) from the cylinder.

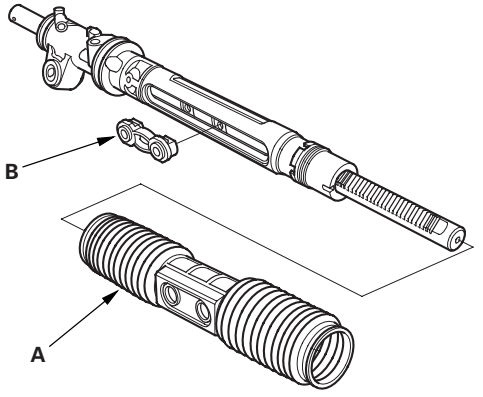

17. Check the slider guide for damage and cracks. Use vernier calipers to measure the thickness of the slider guide. If the thickness is less than the service limit (A), replace the slider guide.

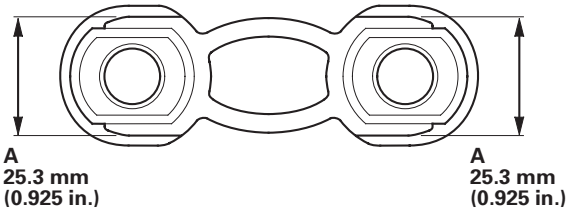

18. Remove and discard the stop ring (A) on the cylinder by expanding it with snap ring pliers. Remove and discard the lock screw (B).

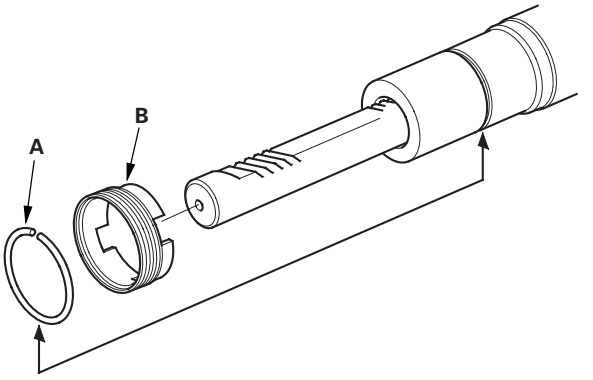

19. Set the cylinder housing (A) in a press so the cylinder side points downward, then press the cylinder end seal (B) and steering rack (C) out of the cylinder. Hold the rack to keep it from falling when pressed clear.

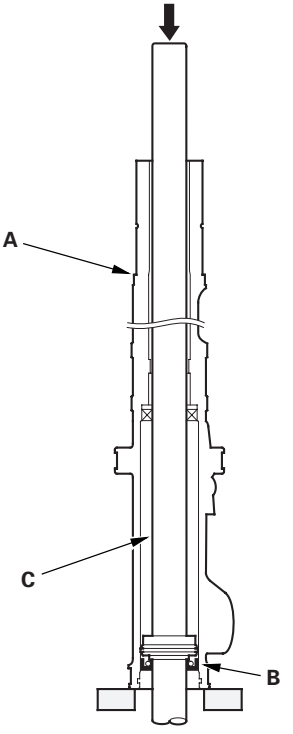

20. Remove the cylinder end seal from the steering rack.

21. Insert the special tools into the cylinder.
Make sure the attachment (A) of the special tools is securely positioned on the bushing edges (B).

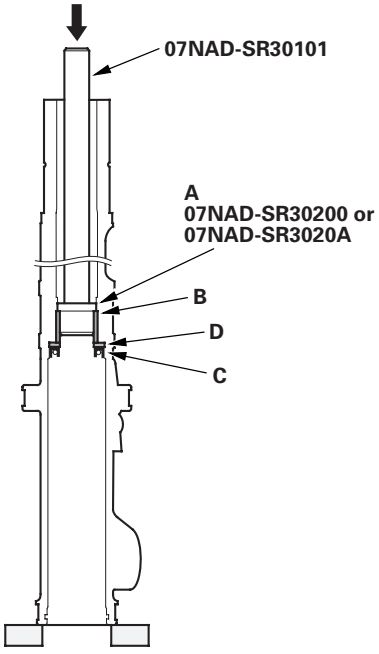

22. Place the cylinder in a press, then remove the cylinder end seal (C), backup ring (D), and bushing from the cylinder by pressing on the special tool end.

Note these items when pressing the cylinder end seal:
- Keep tool straight to avoid damaging the cylinder wall. Check the tool angle, and correct it if necessary, when removing the cylinder end seal.
- Use a press to remove the cylinder end seal. Do not try to remove the seal by striking the tool; striking the tool would break the cylinder end seal, and the seal would remain in the cylinder.

23. Carefully pry the piston seal ring (A) and O-ring (B) off the rack piston. Be careful not to damage the inside of the seal ring groove and piston edges when removing the seal ring.

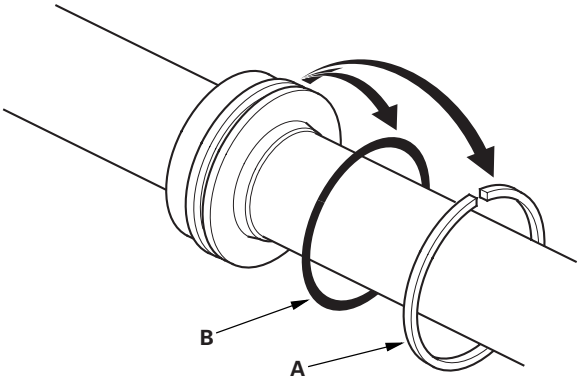

24. Before removing the valve housing (A), apply vinyl tape (B) to the splines on the pinion shaft.

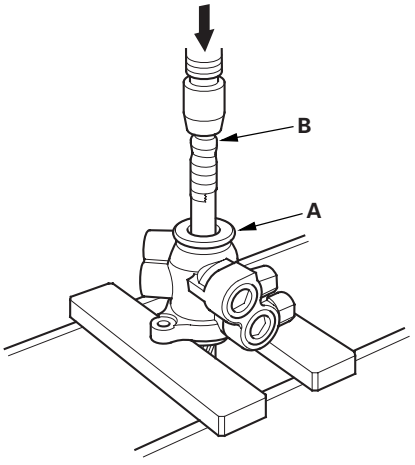

25. Separate the valve housing from the pinion shaft/ valve using a press.

(cont'd)

Steering Gearbox Overhaul (cont'd)

26. With your finger, check the inner wall of the valve housing where the seal ring slides. If there is a step in the wall, the housing is worn. Replace it.

    NOTE: There may be sliding marks from the seal ring on the wall of the valve housing. Replace the valve housing only if the wall is stepped.

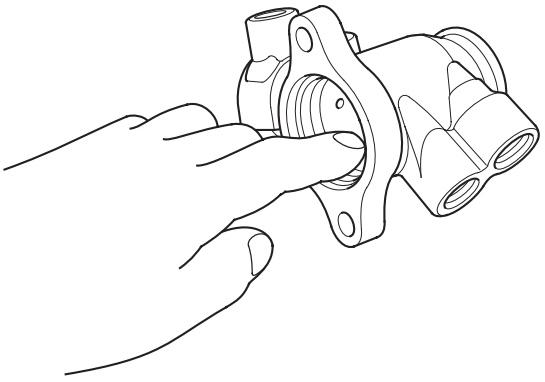

27. Check for wear, burrs, and other damage to the edges of the grooves in the sleeve.

    NOTE: The pinion shaft and sleeve are a precision matched set. If either the pinion shaft or sleeve must be replaced, replace both parts as a set.

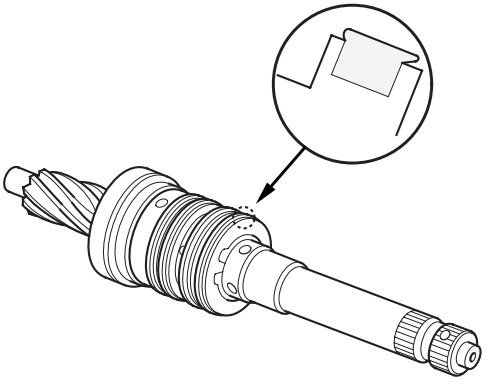

28. Remove the snap ring (A) and sleeve (B) from the pinion shaft.

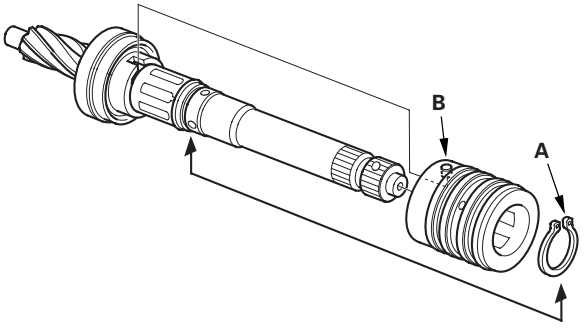

29. Using a cutter, or an equivalent tool, cut and remove the four seal rings from the sleeve. Be careful not to damage the edges of the sleeve grooves and the outer surface when removing the seal rings.

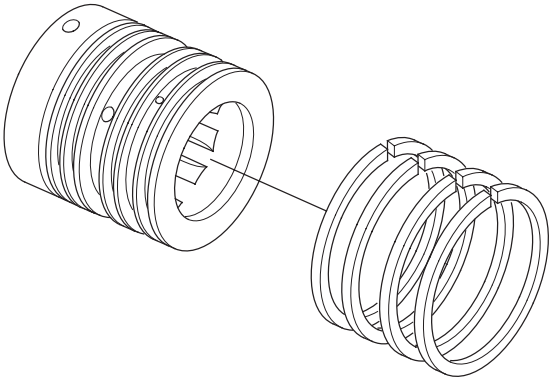

30. Using a cutter or an equivalent tool, cut the valve seal ring (A) and the O-ring (B) at the groove (C) in the pinion shaft. Remove the valve seal ring and the O-ring. Be careful not to damage the edges of the pinion shaft groove and outer surface when removing the valve seal ring and the O-ring.

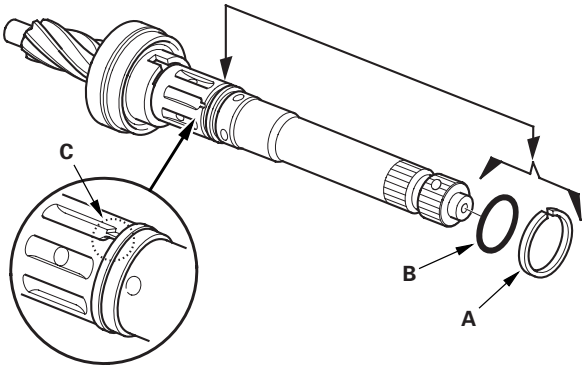

31. Remove the valve oil seal (A) and wave washer (B) from the pinion shaft.

    Note these items during disassembly:
    - Inspect the ball bearing (C) by rotating the outer race slowly. If there is any excessive play, replace the pinion shaft and sleeve as an assembly.
    - The pinion shaft and sleeve are a precise fit; do not intermix old and new pinion shafts and sleeves.

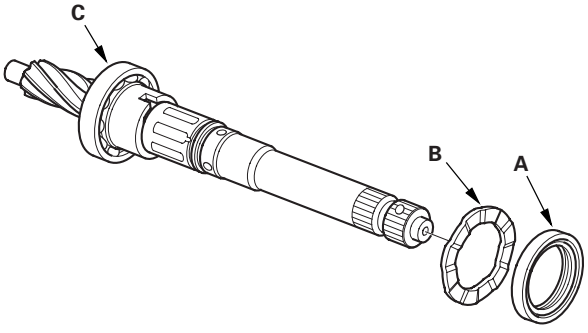

32. Press the valve oil seal (A) and roller bearing (B) out of the valve housing using a hydraulic press and the special tool.

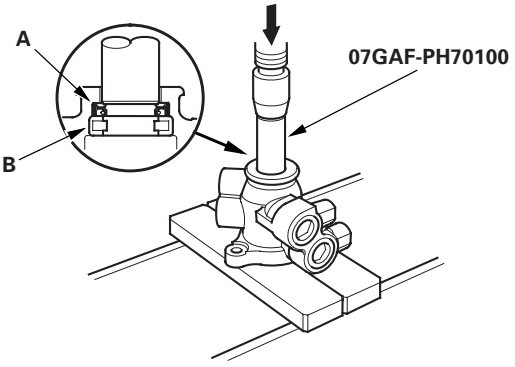

Reassembly

33. Apply vinyl tape (A) to the stepped portion of the pinion shaft, and coat the surface of the vinyl tape with power steering fluid.

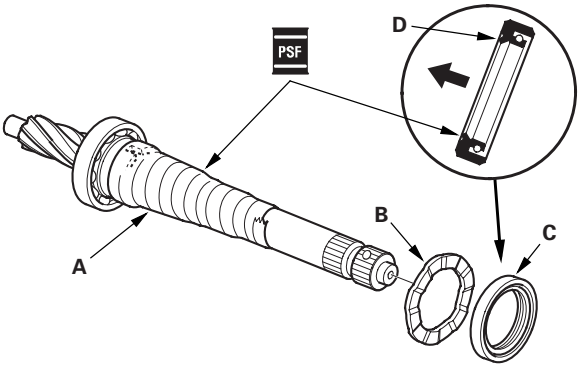

34. Install the wave washer (B). Coat the inside surface of the new valve oil seal (C) with power steering fluid, and install the seal with its grooved side facing opposite the bearing, then slide it over the pinion shaft, being careful not to damage its sealing lip (D). Remove the vinyl tape.

(cont'd)

Steering Gearbox Overhaul (cont'd)

35. Install the special tool over the pinion, and coat the surface of the tool with power steering fluid. Slip the new O-ring (A) and new valve seal ring (B) over the special tool, and expand them.

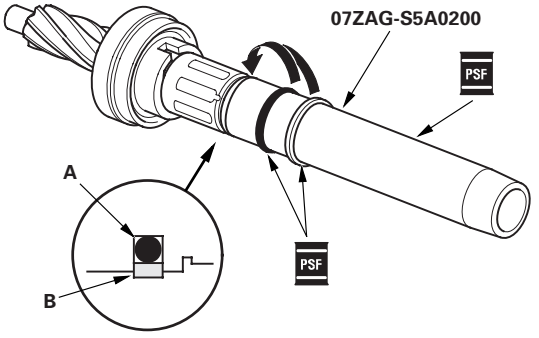

36. Fit the O-ring into the groove of the pinion shaft. Then slide the valve seal ring over the shaft and into the groove on the pinion shaft.

37. Remove the valve seal ring guide special tool, and apply power steering fluid to the surface of the valve seal ring (A).

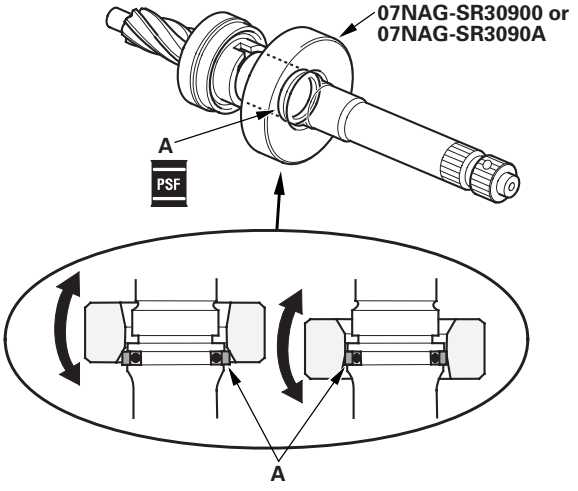

38. Apply power steering fluid to the inside of the valve seal ring sizing special tool, and install it. Set the larger diameter end of the special tool over the valve seal ring, and move the special tool up and down several times to make the valve seal ring fit in the pinion shaft groove.

39. Remove the special tool, turn it over, slide the smaller diameter end over the valve seal ring. Move it up and down several times to make the valve seal ring fit snugly in the pinion shaft groove.

40. Apply power steering fluid to the surface of the special tool. Slip two new seal rings (A) over the special tool from the smaller diameter end, and expand them. Install only two rings at a time from each end of the sleeve (B).

    Note these items when installing the seal ring:
    - Do not over-expand the seal ring. Install the resin seal rings with care so as not to damage them. After installation, make sure you contract the seal rings using the special tool (sizing tool).
    - There are two types of sleeve seal rings; black and brown. Do not mix the different types of rings as they are not compatible.

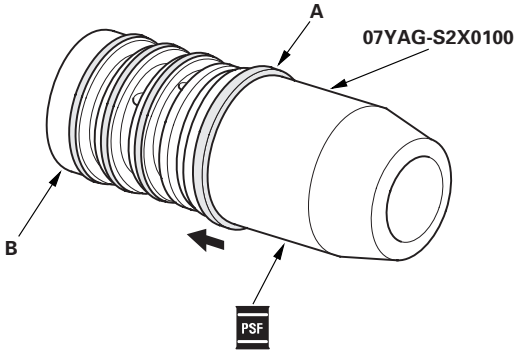

41. Align the special tool with each groove in the sleeve, and slide a sleeve seal ring into each groove. After installation, compress the seal rings with your fingers temporarily.

42. Apply power steering fluid to the seal rings on the sleeve, and to the entire inside surface of the special tool, then slowly insert the sleeve into the special tool.

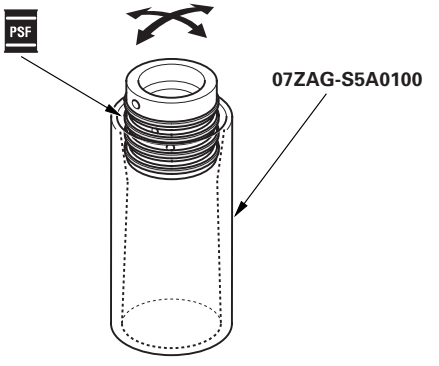

43. Move the sleeve back and forth several times to make the seal rings snugly fit in the sleeve. Make sure the seal rings are not twisted.

44. Apply power steering fluid to the surface of the pinion shaft (A). Slide the sleeve (B) onto the pinion shaft by aligning the locating pin (C) on the inside of the sleeve with the cutout (D) in the shaft. Then install the new snap ring (E) securely in the pinion shaft groove. Be careful not to damage the valve seal ring when inserting the sleeve.

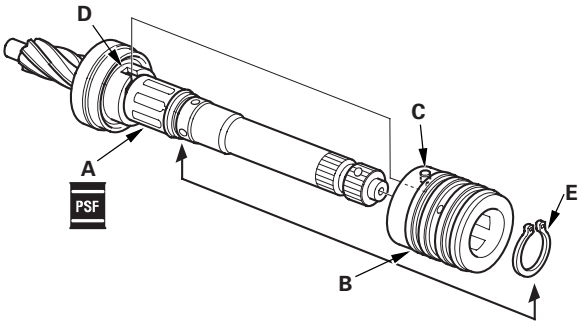

45. Apply power steering fluid to the seal ring lip of the new valve oil seal (A), then install the seal in the valve housing (B) using a hydraulic press and special tools. Install the seal with its grooved side facing the tool.

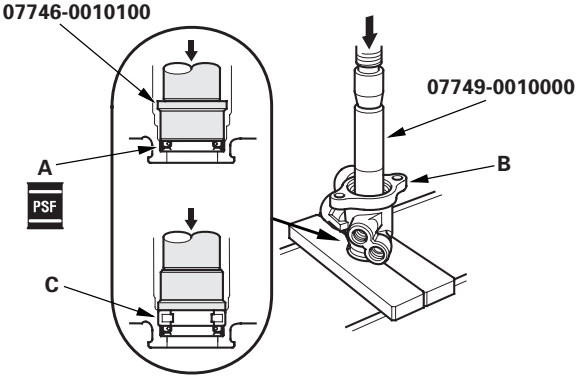

46. Press the roller bearing (C) into the valve housing with a hydraulic press and special tool.

47. Apply vinyl tape (A) to the pinion shaft, then coat the vinyl tape with power steering fluid.

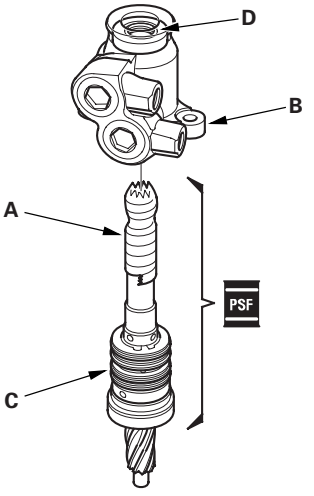

48. Insert the pinion shaft into the valve housing (B). Be careful not to damage the valve seal rings (C) and valve oil seal sealing lip (D).

49. Remove the vinyl tape from the pinion shaft, then remove any residue from the tape adhesive.

50. Press the pinion shaft/sleeve into the valve housing with a hydraulic press. Check that the pinion shaft/sleeve turns smoothly by hand after installing it.

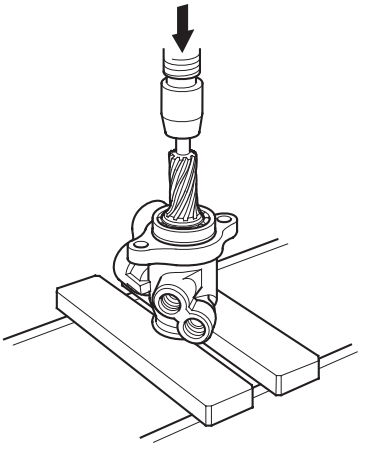

(cont'd)

Steering Gearbox Overhaul (cont'd)

51. Coat the special tool with power steering fluid, then slide it onto the steering rack, big end first.

52. Position the new O-ring (A) and new piston seal ring (B) on the special tool, then slide them down toward the big end of the tool.

    Note these items during reassembly:
    - Do not over expand the resin seal rings. Install the resin seal rings with care so as not to damage them. After installation, make sure you contract the seal ring using the special tool (sizing tool).
    - Replace piston's O-ring and seal ring as a set.

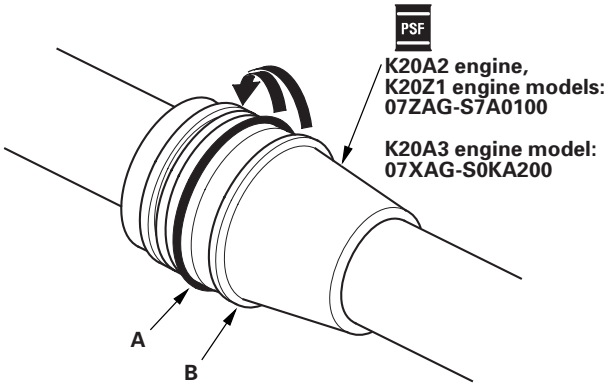

53. Pull the O-ring off into the piston groove, then pull the piston seal ring off into the piston groove on top of the O-ring.

54. Coat the piston seal ring (A) and the inside of the special tool with power steering fluid, then carefully slide the tool onto the rack and over the piston seal ring.

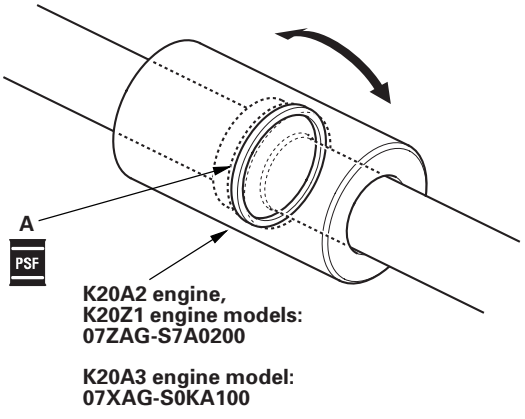

55. Move the special tool back and forth several times to make the piston seal ring fits snugly in the piston.

56. Set the new bushing (A) on the special tool, and insert the special tools into the cylinder housing (B).

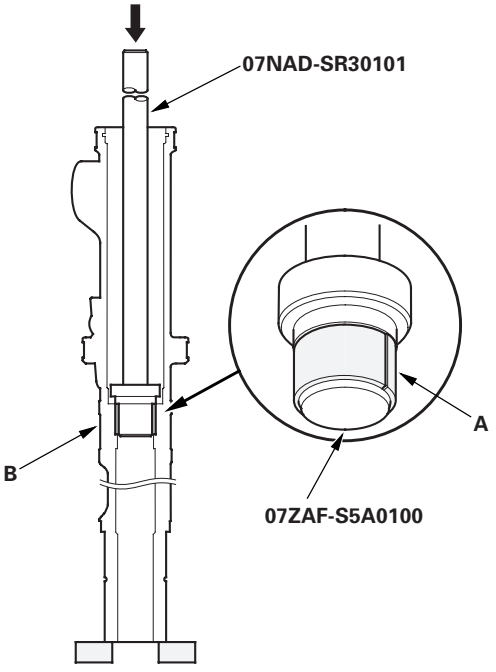

57. Set the cylinder in a press, and install the bushing into the bottom of the cylinder by pressing on the tool with a press. Do not push on the tool with excessive force as it may damage the new bushing.

58. Coat the sliding surface of the special tool (A) and new cylinder end seal (B) with power steering fluid. Place the seal on the special tool with its grooved side (C) facing opposite the special tool.

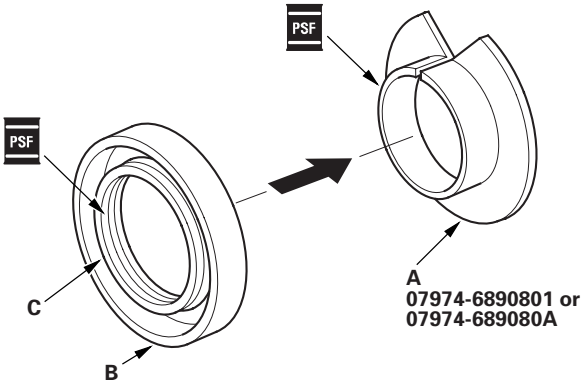

59. Apply a thin coat of multipurpose grease to the inside of the special tool.

60. Install the cylinder end seal (A) onto the steering rack (B) with its grooved side (C) toward the piston (D). Make sure the gap in the special tool is opposite of rack teeth.

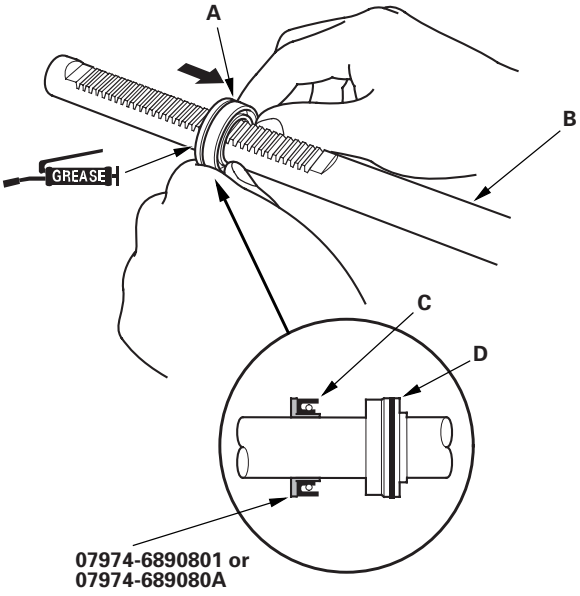

61. Separate the cylinder end seal from the special tool, then remove the special tool.

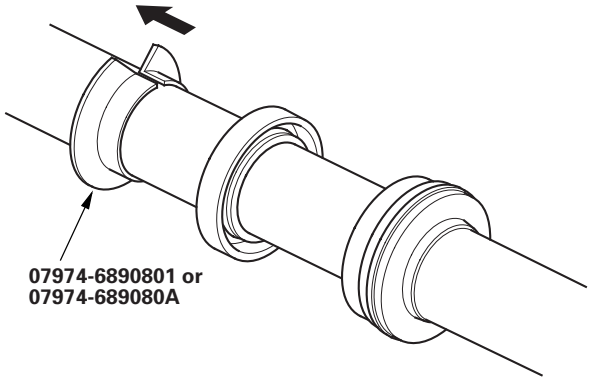

62. Install the new backup ring (A) on the steering rack, then place the backup ring and cylinder end seal (B) against the piston (C).

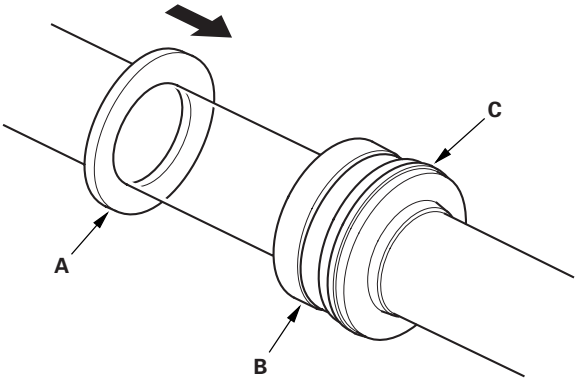

63. Mark (A) a position on the steering rack surface with a felt-tip marker, 14.5 mm (0.57 in.) from the rack end edge.

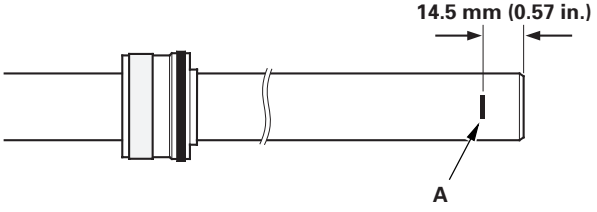

(cont'd)

Steering Gearbox Overhaul (cont'd)

64. Apply multipurpose grease to the steering rack teeth, then insert the steering rack (A) into the cylinder (B). Be careful not to damage the inner surface of the cylinder wall and bushing with the rack edges.

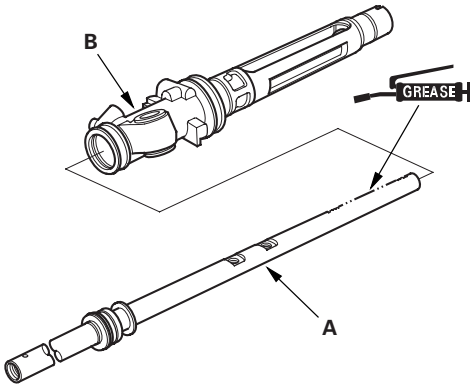

65. Set the cylinder (A) in a press, then press the cylinder end seal (B) into the bottom of the cylinder until the mark (C) on the rack meets the edge (D) of the cylinder.

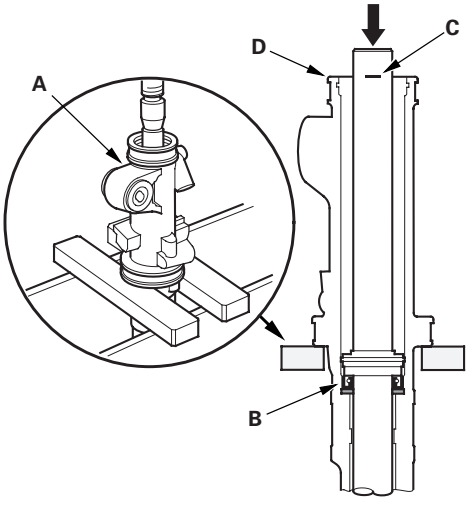

66. Coat the inside and outside surfaces of the new cylinder end seal (A) with power steering fluid.

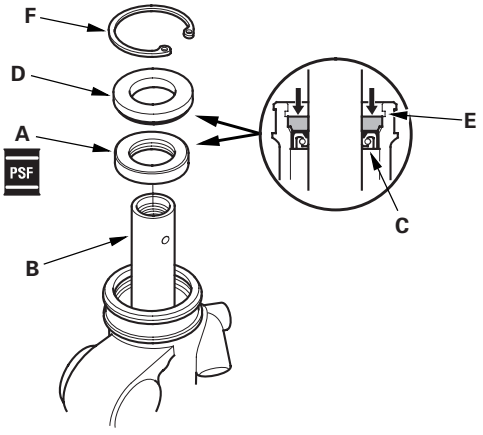

67. Install the cylinder end seal onto the steering rack (B) with its grooved side (C) toward the piston. Push in the cylinder end seal with your finger.

68. Place the backup ring (D) on the cylinder end seal with its flat side facing upward. Then drive the backup ring in with the appropriate size socket wrench until its surface is below the snap ring groove (E). Install the snap ring (F) in the groove.

69. Install the new lock screw (A) on the cylinder.

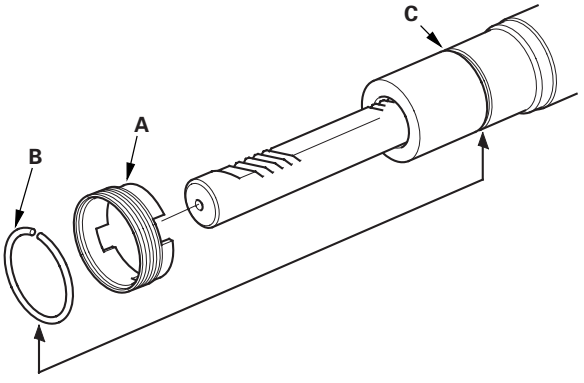

70. Install the new stop ring (B) in the groove (C) on the cylinder by expanding it with snap ring pliers. Be careful not to scratch or damage on the cylinder surface with the stop ring edges.

71. Set the new boot bands (B) on the band installation grooves of boot A by aligning the tabs (C) with the holes (D) of the band. Do not close the ear portion of the boot band yet. Coat the housing surface with multipurpose grease in the shaded area shown.

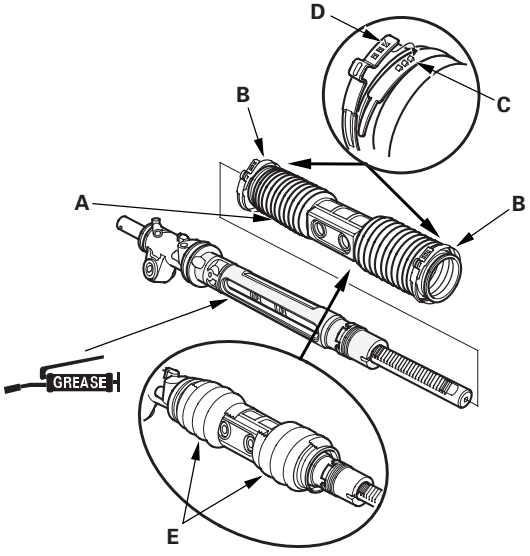

72. Compress boot A by hand, and apply vinyl tape (E) to the bellows so the boots stay collapsed and pulled back. Pass boot A over the cylinder so the smaller diameter end of the boot faces the gearbox housing.

73. Apply multipurpose grease to the sliding surface of the slider guide (A). Keep grease off of the rack-to-slider guide matching surfaces and the boot-to-slider guide matching surfaces. Slide the steering rack all the way to left, and place the slider guide on the steering rack by aligning the bolt holes (B).

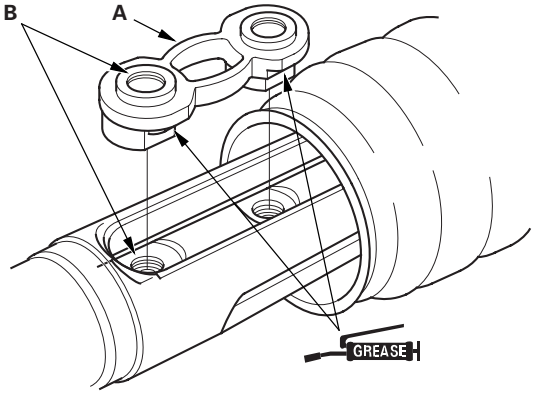

74. Hold the gearbox housing using a C-clamp (commercially available) (A) and the wooden block (B) as shown.

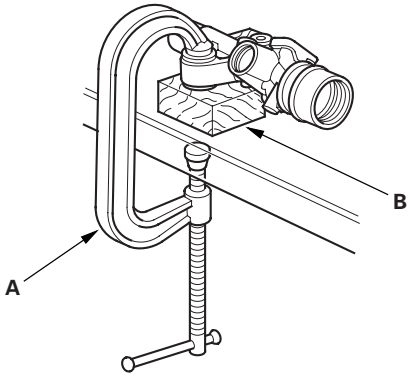

75. Push the cylinder (A) into the gearbox housing (B) so the notch (C) is aligned with the pin (D) inside of the gearbox housing.

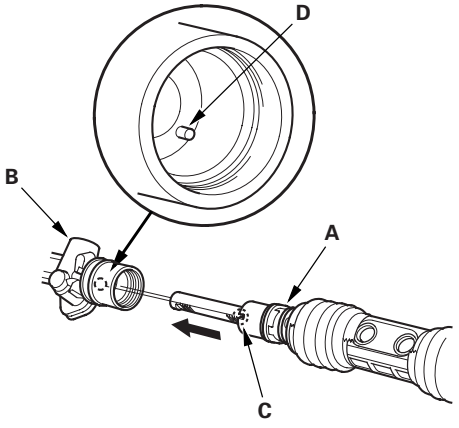

(cont'd)

Steering Gearbox Overhaul (cont'd)

76. Tighten the lock screw (A) by hand first, then install the special tool (B) on the lock screw. Lightly tighten the lock screw. Do not tighten the lock screw to the specified torque yet.

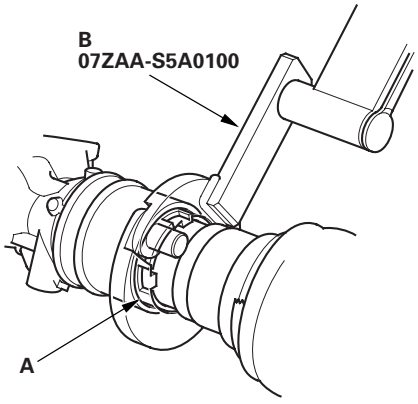

77. Remove the special tool.

78. Coat the new O-ring (A) with multipurpose grease, and carefully fit it on the valve housing.

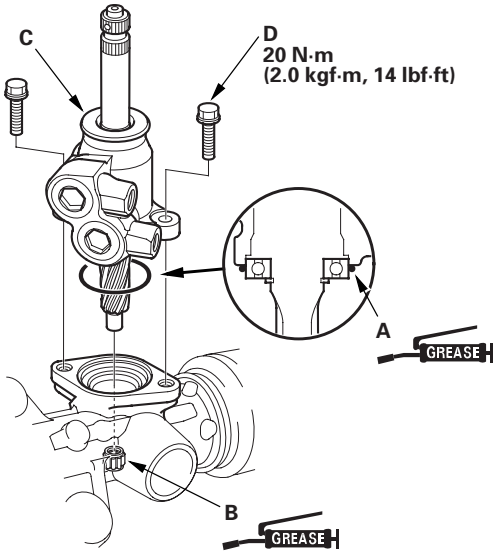

79. Apply multipurpose grease to the needle bearing (B) in the gearbox housing, then install the valve body unit (C) by engaging the gears. Note the valve body unit installation position (direction of the line connections). Tighten the flange bolts (D) to the specified torque. Remove the gearbox housing from the C-clamp.

80. Grease the sliding surface and circumference of the rack guide (A) with multipurpose grease, and install it onto the gearbox housing. Wipe the grease off the threaded section of the housing.

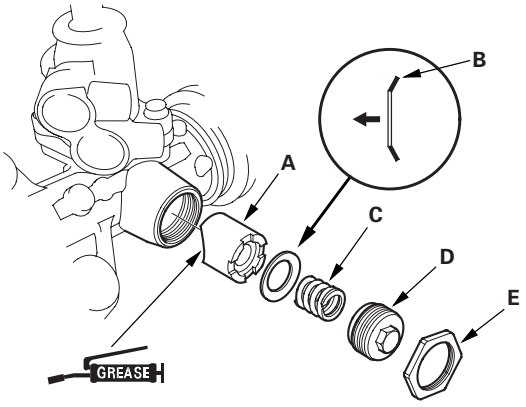

81. Install the disc washer (B) with its convex side facing the rack guide. Install the spring (C). Apply sealant to the middle of the threads on the rack guide screw (D), then install and tighten it to 25 N·m (2.5 kgf·m, 18 lbf·ft). Loosely install the locknut (E).

82. Center the steering rack within its stroke, and align the slider guide (B) with the holes (C) in boot A. Fit the slider guide to boot A by pressing around the edges of the holes securely.

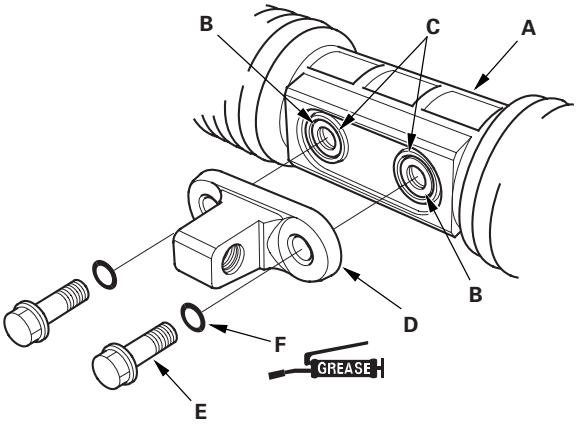

83. Before installing the bracket (D), clean the mating surface of the 12 mm flange bolts (E) and bracket. Coat the new O-rings (F) with multipurpose grease, and install them on the 12 mm flange bolts.

84. Loosely install the bracket on the steering rack by tightening the 12 mm flange bolts to 25 N·m (2.5 kgf·m, 18 lbf·ft).

85. Install the special tool on the lock screw (A). Retighten the lock screw to the specified torque values.

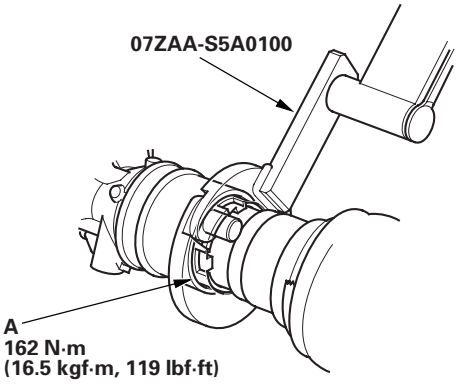

86. Remove the special tool.

87. Retighten the 12 mm flange bolts (A) to the specified torque values.

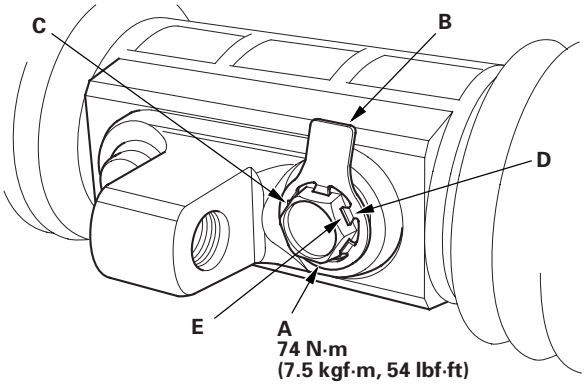

88. After tightening the 12 mm flange bolts, install a new stop washer (B) over one of the bolt heads (C). Be sure the tabs (D) of the stop washer are aligned with the flat surfaces (E) of the bolt head.

89. Clean off any grease or contamination from the boot installation grooves around on the housing.

90. Expand boot A by removing the vinyl tape, and fit the boot ends (B) in the installation grooves on the cylinder housing.

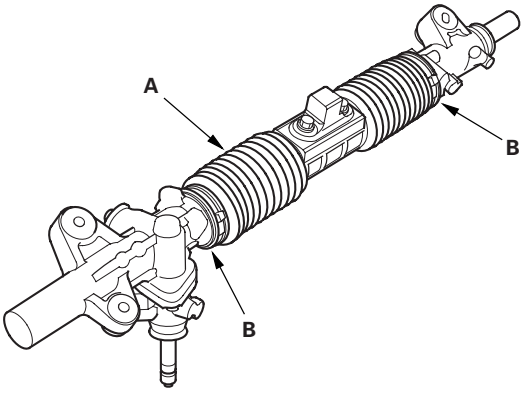

(cont'd)

Steering Gearbox Overhaul (cont'd)

91. Close the ear portion (A) of the band (B) with commercially available pincers, Oetiker 1098 or equivalent (C).

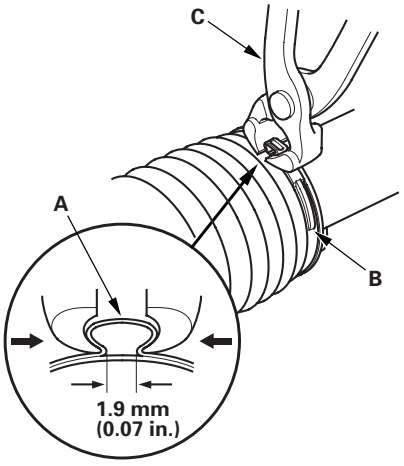

92. Install the rack end plug (A).

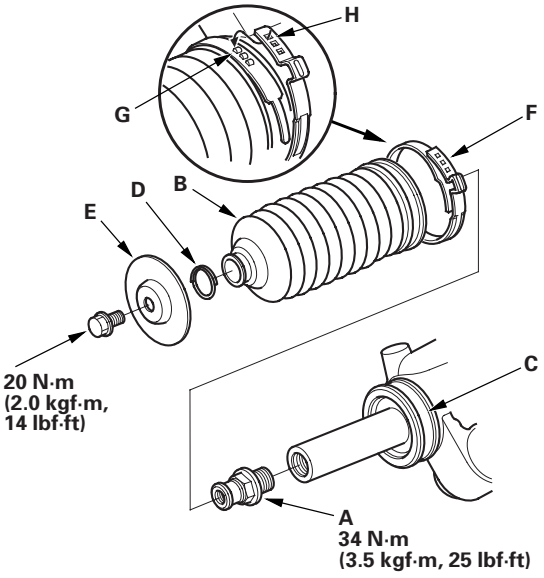

93. Clean off any grease or contamination from the boot installation grooves (C) around on the housing.

94. Install boot B, and set the boot end in the installation grooves in the cylinder housing and rack end plug properly. Install the clip (D) and boot guard (E). Install the new boot band (F) in the band grooves of boot B by aligning the tabs (G) with the holes (H) in the band.

95. Close the ear poriton (A) of the band (B) with commercially available pincers, Oetiker 1098 or equivalent (C). Slide the rack right and left to be certain that the boots are not deformed or twisted.

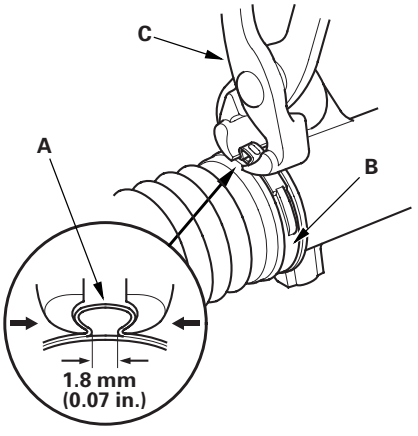

96. Install a new lock washer (A) on the tie-rod (B) with the radiused side of the washer toward the tie-rod, and screw the tie-rod on the bracket (C). Repeat this step for the other tie-rod. Hold the bracket with one wrench, and tighten both tie-rods to the specified torque with another wrench.

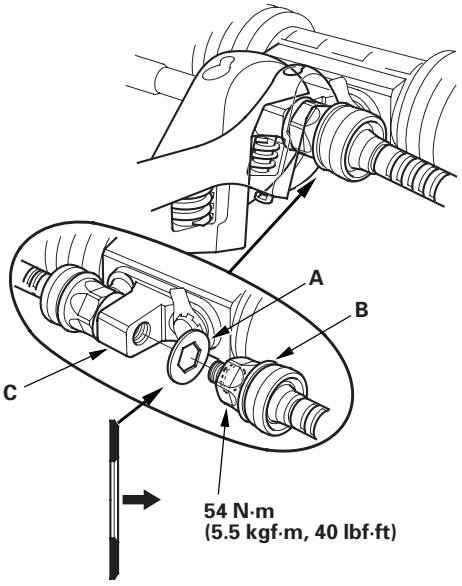

97. Bend the lock washers (A) against the flat spots on the bracket with a large pair of pliers.

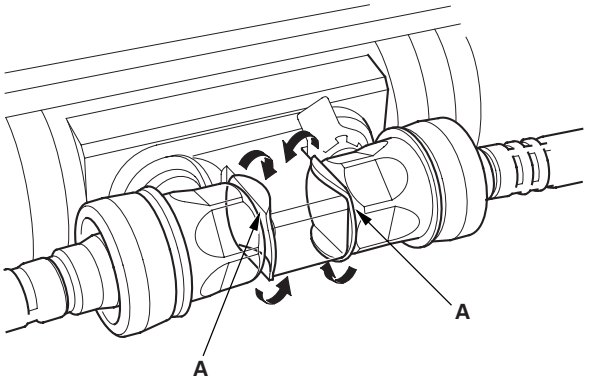

98. Install the cylinder lines.

Note these items during reassembly:
- Thoroughly clean the joints of the cylinder lines. The joints must be free of foreign material.
- Install the cylinder lines by tightening the flare nuts by hand first, then tighten them to the specified torque.

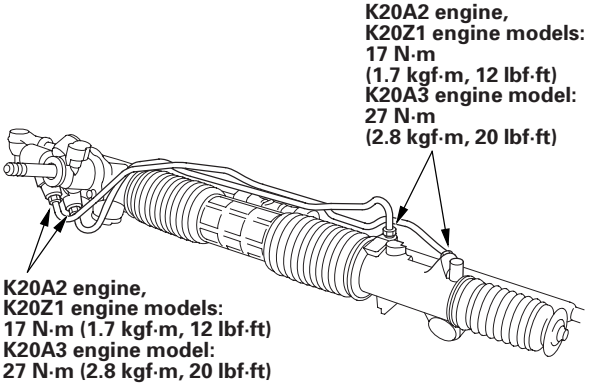

99. Adjust the rack guide screw (see page 17-30). After adjusting, check that the rack moves smoothly by sliding it right and left. Reinstall the steering gearbox (see page 17-54).

Steering Gearbox Installation

1. Pass the cylinder of the steering gearbox (A) together with the tie-rods (B) through the wheelwell opening on the driver's side.

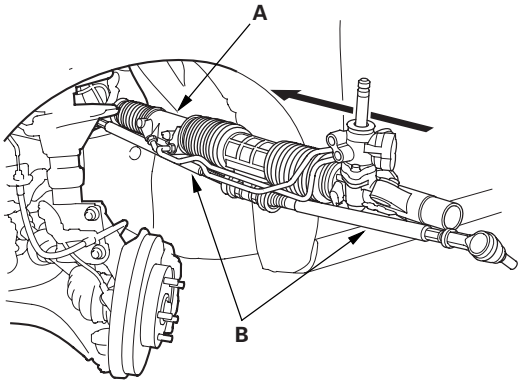

2. Carefully, move the steering gearbox toward the passenger's side until the pinion shaft clears the wheelwell opening on the frame. Continue moving the gearbox toward the passenger's side until the steering gearbox is in position.

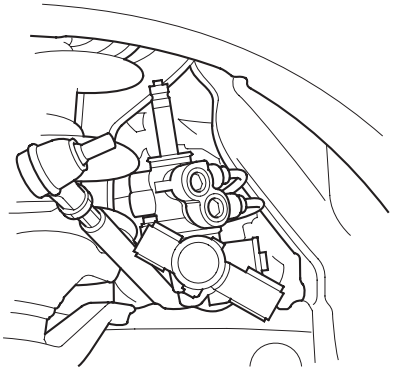

3. Install the pinion shaft grommet (A).

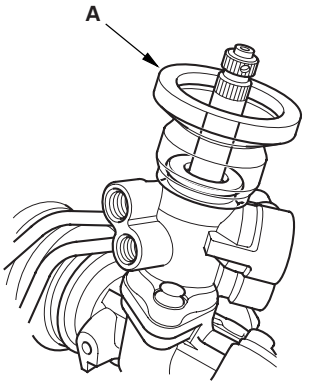

4. Insert the pinion shaft up through the bulkhead, and place the steering gearbox on the gearbox mounting brackets.

5. Install steering stiffener A, and lightly tighten the gearbox attaching nut and bolts.

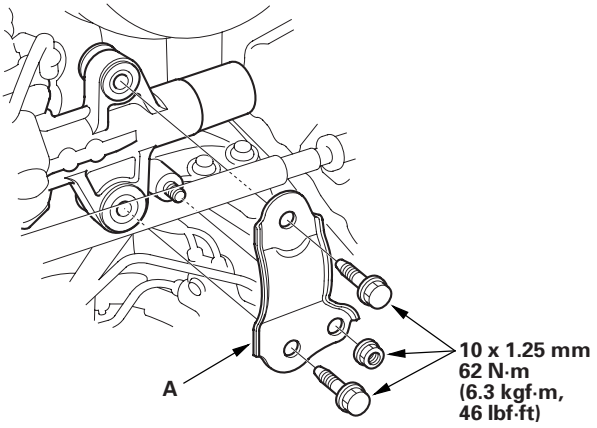

6. Install steering stiffener B with the gearbox attaching nuts and torque them to the specified valve. Then tighten the gearbox attaching nuts and bolts at steering stiffener A to the specified torque values.

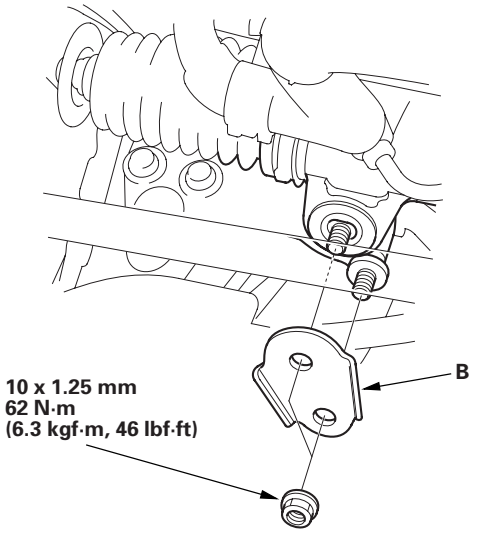

7. Install the steering rack guard (A).

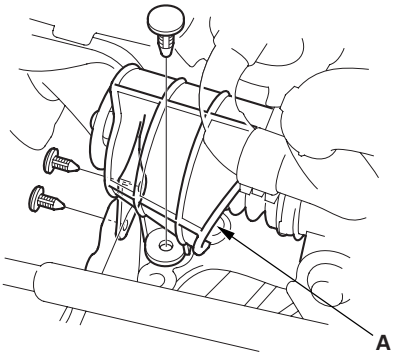

8. On the passenger's side of the gearbox, check for a clearance (A) of 3 mm (0.12 in.) or more between the steering rack guard (B) and boot guard (C). If the steering rack guard is in contact with the boot guard, or if the clearance is less than 3 mm (0.12 in.), adjust the steering rack guard to the correct position.

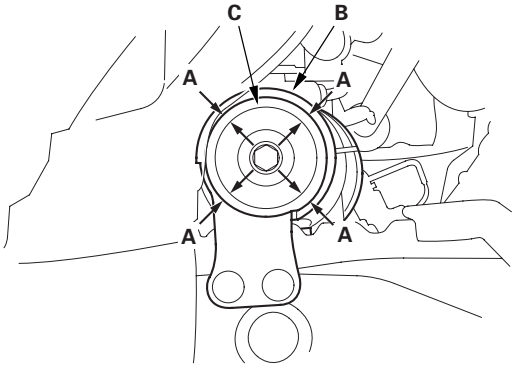

9. Install the body stiffener (A).

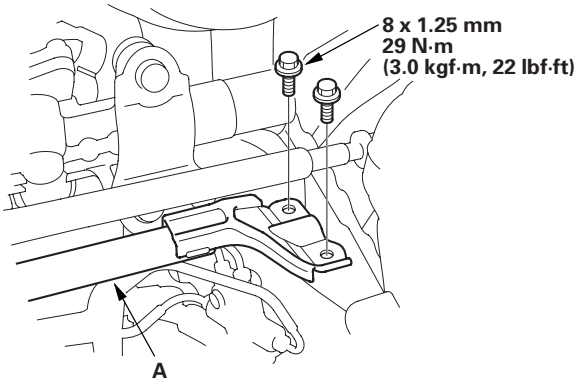

(cont'd)

Steering Gearbox Installation (cont'd)

10. Connect the return line (A) securely, and tighten the 16 mm flare nut (B).

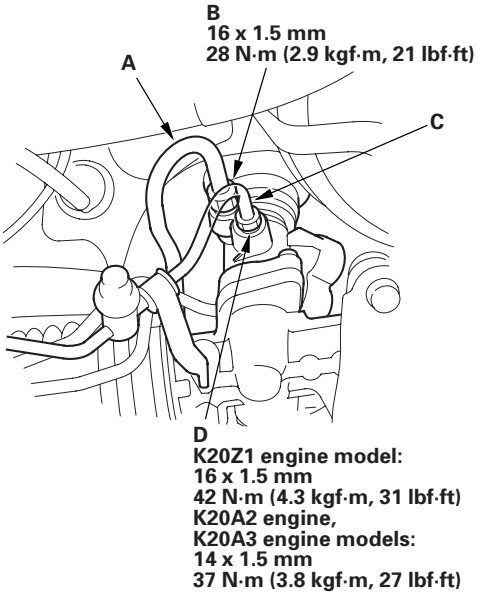

11. Connect the feed line (C) securely, and tighten the 14 mm flare nut (D).

12. Install the return hose clamp (A) and feed line clamp (B) on the left side of the gearbox.

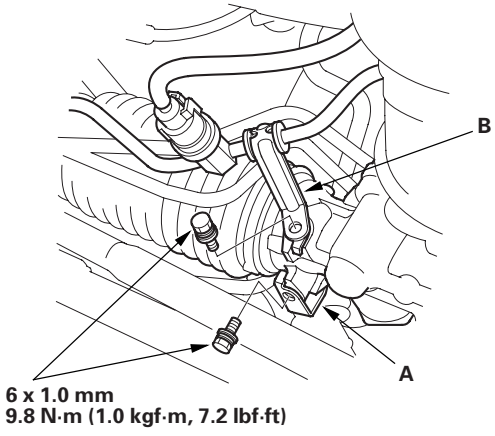

13. Install the return hose clamp (A) and feed line clamp (B) on the right side of the gearbox.

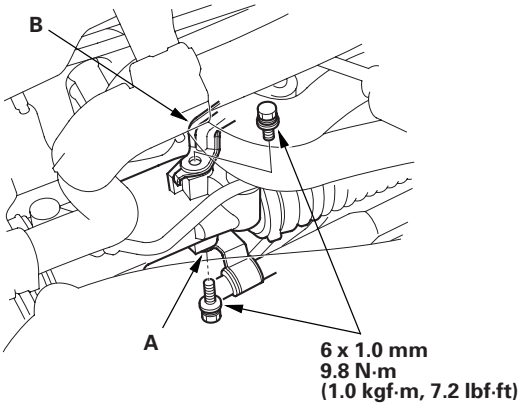

14. Wipe off any grease or contamination from the ball joint tapered section and threads. Then reconnect the tie-rod end (A) to the damper steering arms. Install the 12 mm nut (B) and tighten it.

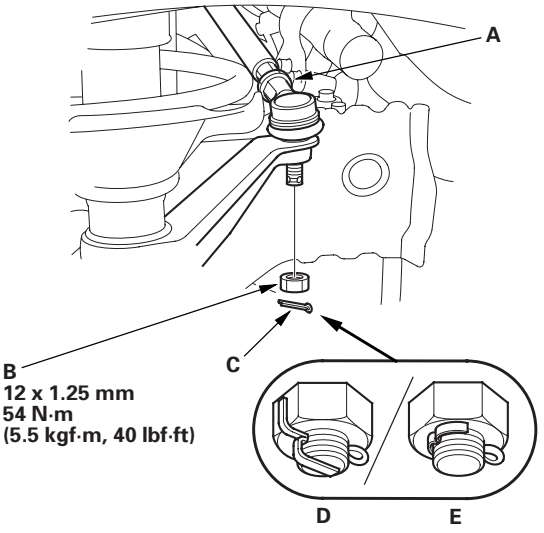

15. Install a new cotter pin (C), and bend it as shown (D) or (E).

16. Install the heat shield (A).

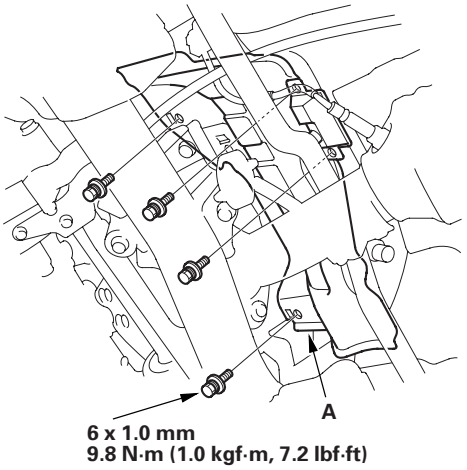

17. Install the air cleaner (A).

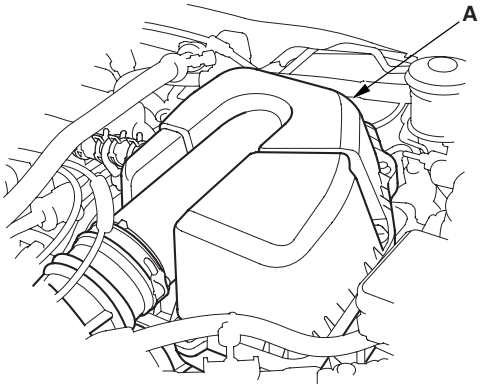

18. Install the steering joint (A), and reconnect the steering shaft (B) and pinion shaft (C). Make sure the steering joint is connected as follows:

- Insert the upper end of the steering joint onto the steering shaft (line up the bolt hole (D) with the flat portion (E) on the shaft).
- Slip the lower end of the steering joint onto the pinion shaft (line up the bolt hole (F) with the groove (G) around the shaft), and loosely install the lower joint bolt. Be sure that the lower joint bolt is securely in the groove in the pinion shaft.
- Pull on the steering joint to make sure that the steering joint is fully seated. Then install the upper joint bolt and tighten it.

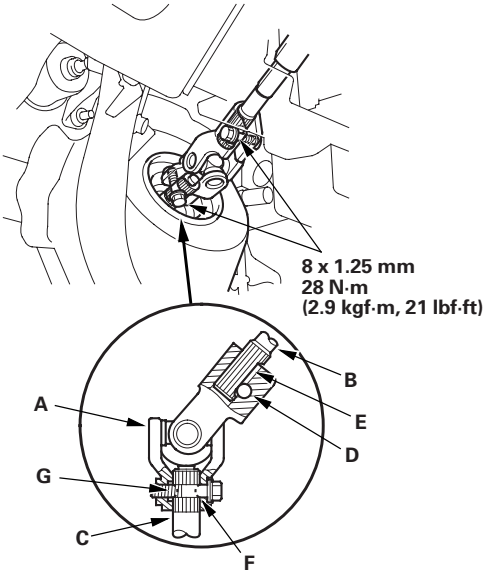

19. Install the driver's dashboard lower cover (see page 20-63), and the driver's dashboard under cover (see page 20-63).

(cont'd)

Steering Gearbox Installation (cont'd)

20. Center the cable reel by first rotating it clockwise until it stops. Then rotate it counterclockwise (about two and half turns) until the arrow mark on the label points straight up. Reinstall the steering wheel (see page 17-24).

21. Install the front wheels.

22. Connect the negative cable to the battery.

23. Fill the system with power steering fluid, and bleed air from the system (see page 17-12).

24. After installation, perform the following:

    - Start the engine, allow it to idle, and turn the steering wheel from lock-to-lock several times to warm up the fluid. Check the gearbox for leaks (see page 17-11).
    - Perform the front toe inspection (see page 18-7).
    - Check the steering wheel spoke angle. Adjust by turning the right and left tie-rods equally, if necessary.
    - 2002-2004 models: Do the ECM/PCM idle learn procedure (see page 11-349).
    - Do the power window control unit reset procedure (see page 22-148).
    - Enter the anti-theft code for the radio, then enter the customer's radio station presets.
    - Set the clock.

Tie-rod Ball Joint Boot Replacement

Special Tools Required
Attachment, 42 mm 07QAD-P0A0100

1. Disconnect the tie-rod end from the steering arm (see step 10 on page 17-33).

2. Remove the boot from the tie-rod end, and wipe the old grease off the ball pin.

3. Pack the lower area of the ball pin (A) with fresh multipurpose grease.

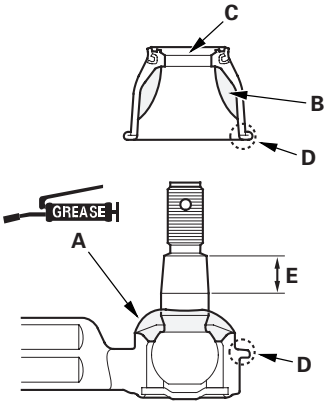

4. Pack the interior of the new boot (B) and lip (C) with fresh multipurpose grease.

   Note these items when installing new grease:
   - Keep grease off the boot mounting area (D) and the tapered section (E) of the ball pin.
   - Do not allow dust, dirt, or other foreign materials to enter the boot.

5. Install the new boot (A) using the special tool. The boot must not have a gap at the boot installation sections (B). After installing the boot, check the ball pin tapered section for grease contamination, and wipe it, if necessary.

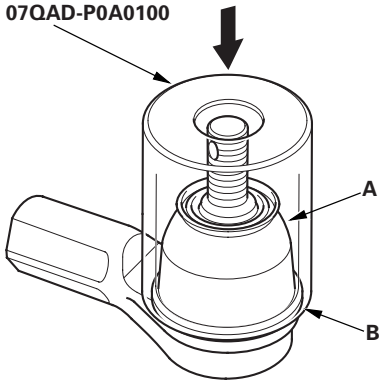

6. Connect the tie-rod end to the steering arm (see step 14 on page 17-56).

7. Perform the front toe inspection (see page 18-7).

Gearbox Mount Cushion Replacement

1. Remove the steering gearbox (see page 17-32).

2. Position the 34 mm socket wrench (A) on the flange part of the gearbox housing with a washer (B), 10 x 105 mm flange bolt (C) and the 10 mm nut (D) as shown.

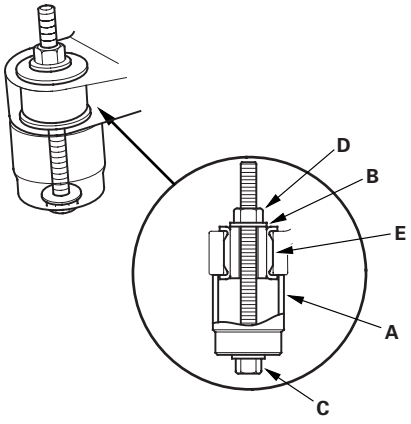

3. Hold the flange bolt with a wrench, and tighten the nut with another wrench. Remove the gearbox mount cushion (E).

4. Apply a mild soap and water to the new gearbox mount cushion surface (A), then place it on the gearbox mounting cushion hole.

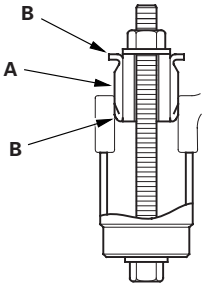

5. Position the 34 mm socket wrench on the flange part of the gearbox housing with a washer, flange bolt, and the nut as shown.

6. Install the gearbox mount cushion by tightening the nut until the mount cushion edges (B) properly fit on the gearbox flange surface.

7. Reinstall the steering gearbox (see page 17-54).

Special Tools

Ref. No.	Tool Number	Description	Qty
①	07AAF-SDAA100	Ball Joint Thread Protector, 12 mm	1
②	07GAF-SD40100	Hub Dis/Assembly Tool, 42 mm	1
③	07MAC-SL0A202	Ball Joint Remover, 28 mm	1
④	071AF-S3VA000	Ball Joint Thread Protector, 14 mm	1
⑤	07746-0010500	Attachment, 62 x 68 mm	1
⑥	07749-0010000	Driver	1
⑦	07965-SA50500	Front Hub Dis/Assembly Tool, 36 mm	1
⑧	07965-SD90100	Support Base	1

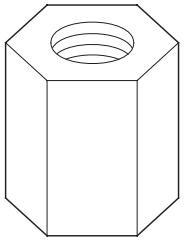

①

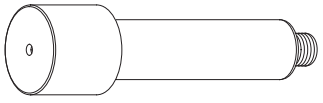

②

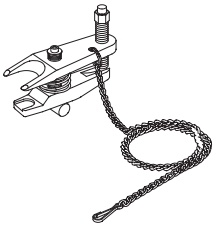

③

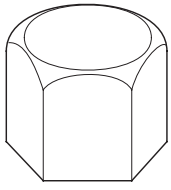

④

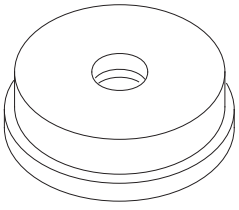

⑤

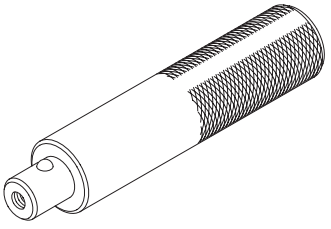

⑥

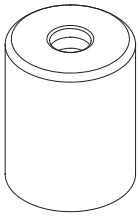

⑦

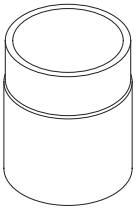

⑧

Component Location Index

Front Suspension

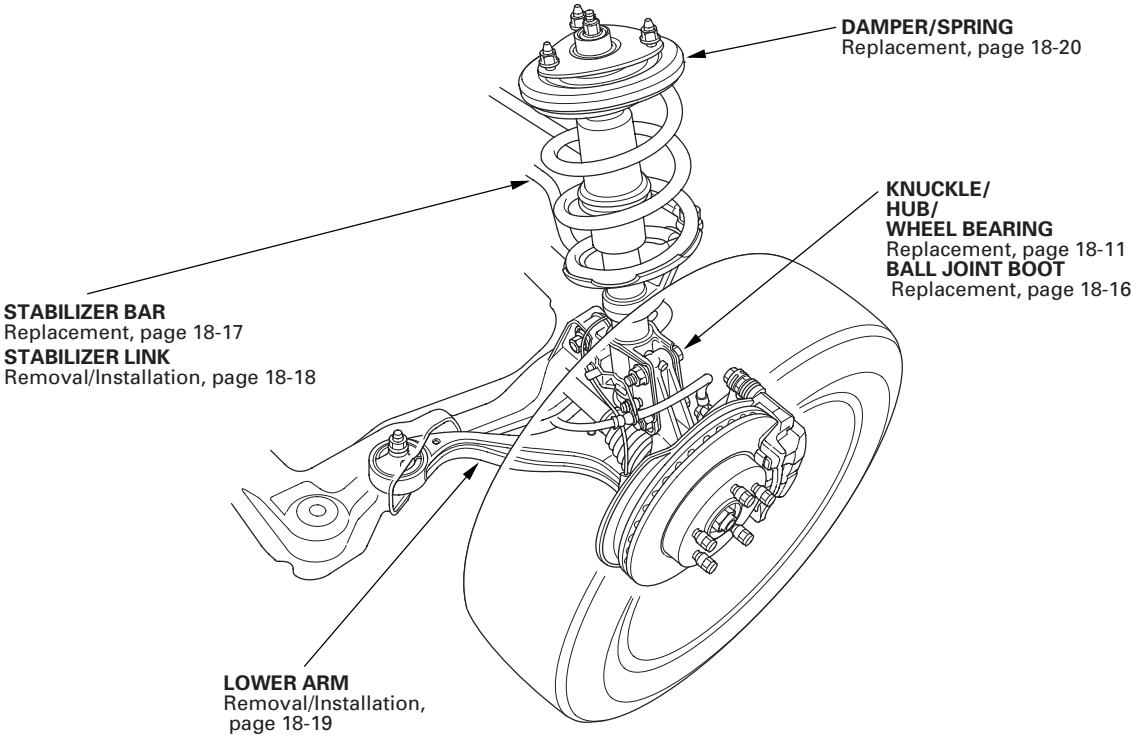

Rear Suspension

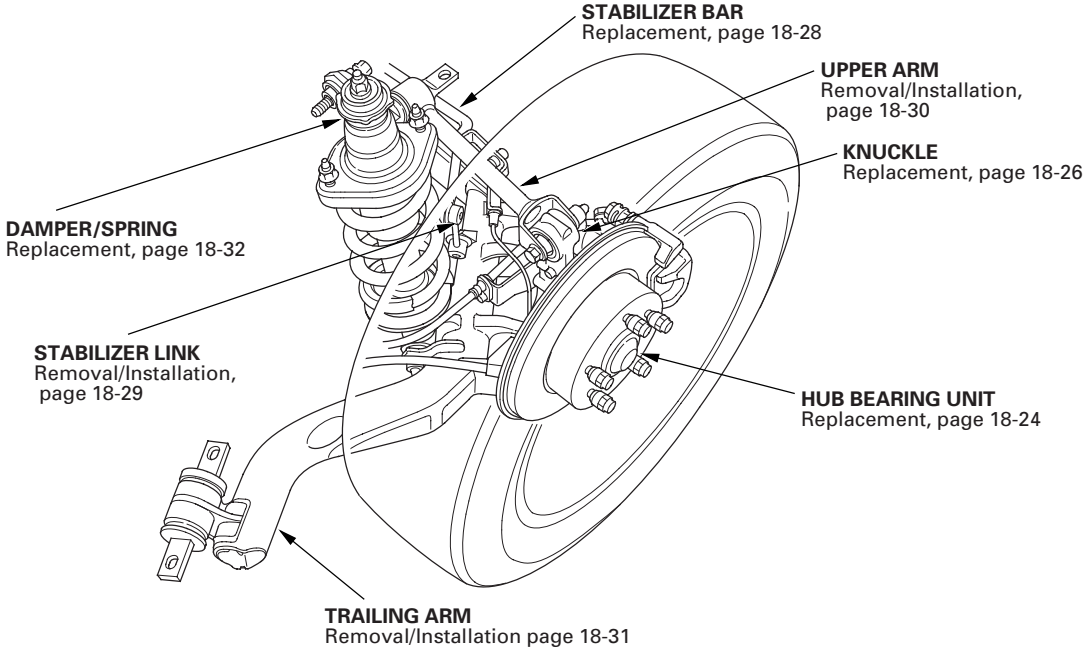

Wheel Alignment

The suspension can be adjusted for front camber, front toe, and rear toe. However, each of these adjustments are interrelated to each other. For example, when you adjust camber, the toe will change. Therefore, you must adjust the front wheel alignment whenever you adjust camber or toe.

Pre-Alignment Checks

For proper inspection and adjustment of the wheel alignment, do these checks:

1. Release the parking brake to avoid an incorrect measurement.

2. Make sure the suspension is not modified.

3. Check the tire size and tire pressure.

   Tire size:
   Front/Rear:
   '02-04 models:
   Canadian RSX model: P195/65R15 89H
   All other models: P205/55R16 89V
   '05-06 models:
   Canadian RSX model: P195/65R15 89H
   All other models, except Type S model: P205/55R16 89V
   Type S model: P215/45R17 87V

   Tire pressure:
   '02-04 models:
   Front: 230 kPa (2.3 kgf/cm^2, 33 psi)
   Rear: 220 kPa (2.2 kgf/cm^2, 31 psi)
   '05-06 models:
   Front/Rear: 220 kPa (2.2 kgf/cm^2, 31 psi)

4. Check the runout of the wheels and tires.

5. Check the suspension ball joints. (Hold a wheel with your hands, and move it up and down and right and left to check for wobbling).

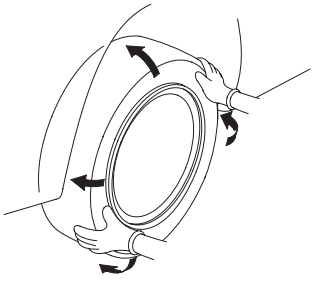

6. Move the vehicle up and down several times to stabilize the suspension.

Caster Inspection

Use commercially available computerized four wheel alignment equipment to measure wheel alignment (caster, camber, toe, and turning angle). Follow the equipment manufacturer's instructions.

Check the caster angle. If the caster angle is not within the specification, check for bent or damaged suspension components.

Caster angle:
'02-04 models: 1°30' ±1°
'05-06 models: 2°53' ±1°

Front Camber Inspection

Use commercially available computerized four wheel alignment equipment to measure wheel alignment (caster, camber, toe, and turning angle). Follow the equipment manufacturer's instructions.

Check the camber angle. If the camber angle is not within the specification, adjust the camber.

Front camber angle:
'02-04 models: 0°00' ±45'
'05-06 models: −0°30' ±45'

Front Camber Adjustment

The front camber can be adjusted by exchanging one or both of the damper pinch bolts with the smaller diameter adjusting bolt(s). The difference between the adjusting bolt diameter and the pinch bolt hole diameter allows a small range of adjustment.

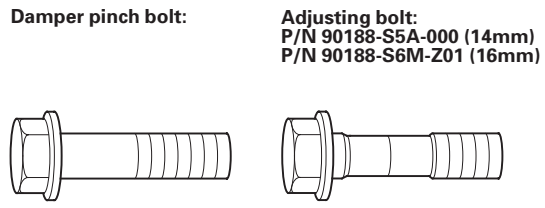

1. Raise the front of the vehicle, and support it with safety stands in the proper locations (see page 1-12).

2. Remove the front wheels.

3. Loosen the damper pinch nuts and bolts (A), and adjust the camber by moving the bottom of the damper within the range of the damper pinch bolt free play.

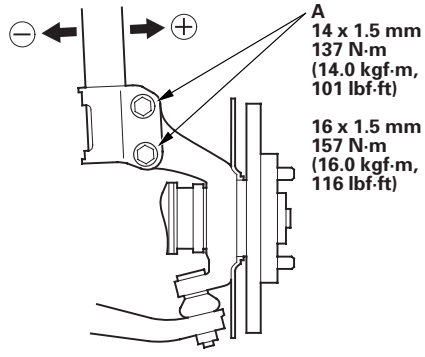

4. Tighten the bolts to the specified torque values.

5. Reinstall the front wheels. Lower the front of the vehicle to the ground, and bounce the vehicle several times to stabilize the suspension.

6. Check the camber angle. If it is within the specification, check the front toe. If it is not within the specification, go to step 7.

(cont'd)

Wheel Alignment (cont'd)

7. Raise the front of the vehicle, and support it with safety stands in the proper locations (see page 1-12).

8. Remove the front wheels.

9. Replace the damper pinch bolts with the adjusting bolts (A), and adjust the camber angle.

   NOTE: The camber angle can be adjusted up to ±15′ (center of tolerance) by replacing one damper pinch bolt with the adjusting bolt. The camber angle can be adjusted up to ±30′ by replacing both upper and lower damper pinch bolts with the adjusting bolts.

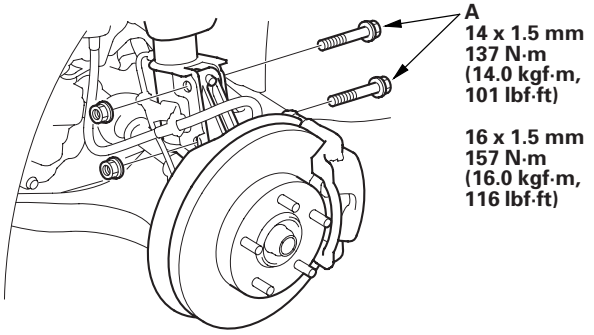

10. Tighten the bolts to the specified torque values.

11. Reinstall the front wheels. Lower the front of the vehicle to the ground, and bounce the vehicle several times to stabilize the suspension.

12. Check the camber angle. If it is within the specification, check the front toe, and adjust it if necessary. If it is not within the specification, readjust, and recheck. If the camber angle cannot be adjusted to the specification, check for bent or damaged suspension components.

Rear Camber Inspection

Use commercially available computerized four wheel alignment equipment to measure wheel alignment (caster, camber, toe, and turning angle). Follow the equipment manufacturer's instructions.

Check the camber angle. If the camber angle is not within the specification, check for bent or damaged suspension components.

Rear camber angle:
'02-04 models: −0°45′ ±45′
'05-06 models: −1°00′ ±45′

NOTICE
Do not loosen the special bolts on the trailing arm.

Front Toe Inspection/Adjustment

Use commercially available computerized four wheel alignment equipment to measure wheel alignment (caster, camber, toe, and turning angle). Follow the equipment manufacturer's instructions.

1. Check the tire pressure.

2. Center the steering wheel spokes and install a commercially available steering wheel holder tool.

3. Check the toe. If it is not within the specification, go to step 4.

   Front toe-in: 0±3 mm (0±0.12 in.)

4. Loosen the locknut (A) while holding the tie-rod end (B).

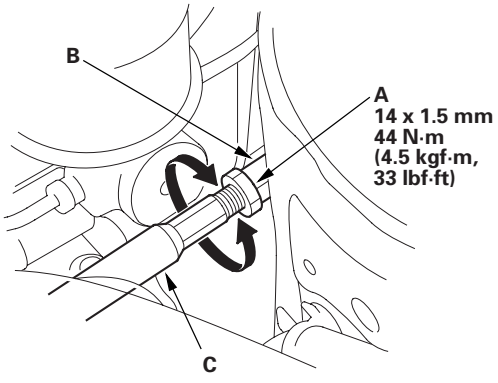

5. Turn the tie-rod (C) until the toe is correct.

   NOTE: Adjust both the right and left wheels at the same time by the same amount in opposite directions to obtain the correct toe and to keep the steering wheel straight.

6. After adjusting, tighten the locknut while holding the tie-rod arm. Make sure the toe setting does not change.

Rear Toe Inspection/Adjustment

Use commercially available computerized four wheel alignment equipment to measure wheel alignment (caster, camber, toe, and turning angle). Follow the equipment manufacturer's instructions.

1. Release the parking brake.

2. Check the toe. If it is not within the specification, go to step 3.

   Rear toe-in: 2^{+2}_{-1} mm ($0.08^{+0.08}_{-0.04}$ in.)

3. Loosen the self-locking nut (A) while holding the adjusting bolt (B).

   NOTICE
   Do not loosen the special bolts (C) on the trailing arm.

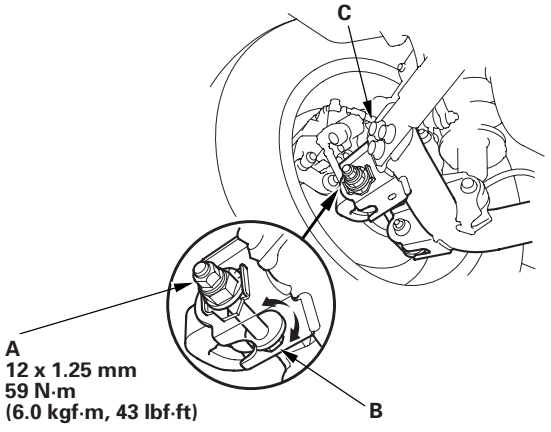

4. Replace the self-locking nut with a new one, and lightly tighten it.

   NOTE: Always use a new self-locking nut whenever it has been loosened.

5. Adjust the adjusting bolt until the toe is correct.

6. Tighten the self-locking nut to the specified torque value while holding the adjusting bolt.

(cont'd)

Wheel Alignment (cont'd)

Turning Angle Inspection

Use commercially available computerized four wheel alignment equipment to measure wheel alignment (caster, camber, toe, and turning angle). Follow the equipment manufacturer's instructions.

1. Turn the steering wheel fully to the right and left while applying the brake, and check the turning angles of both front wheels. If the turning angle is not within the specification or the inward turning angles differ between the right and left side, go to step 2.

   Turning angle:
   Inward: 35°00′ ±2°
   Outward: 28°00′ (reference)

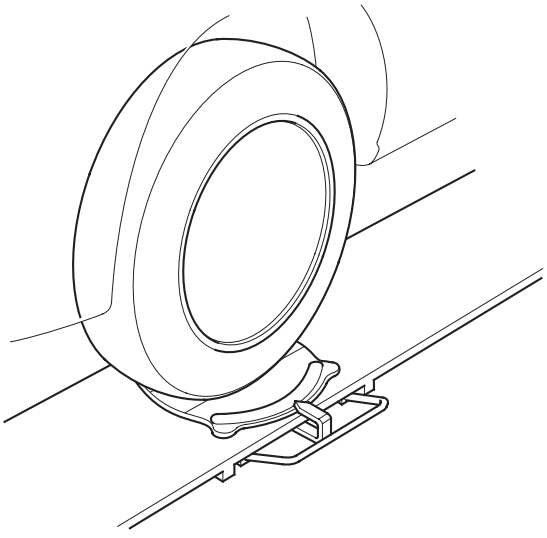

2. Check the toe. If it is correct, but the turning angle is not within the specification, check for bent or damaged suspension components.

Wheel Bearing End Play Inspection

1. Raise the vehicle, and support it with safety stands in the proper locations (see page 1-12).

2. Remove the wheel.

3. Install suitable flat washers (A) and wheel nuts, and tighten the nuts to the specified torque value to hold the brake disc securely against the hub.

   Front:

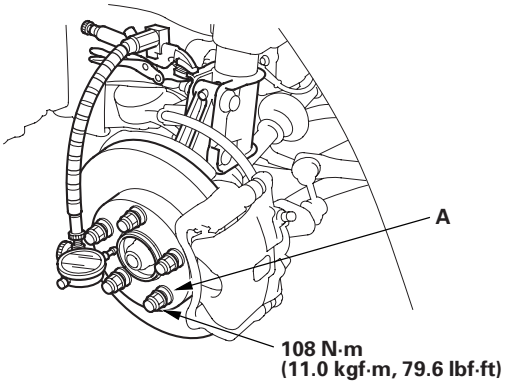

   Rear:

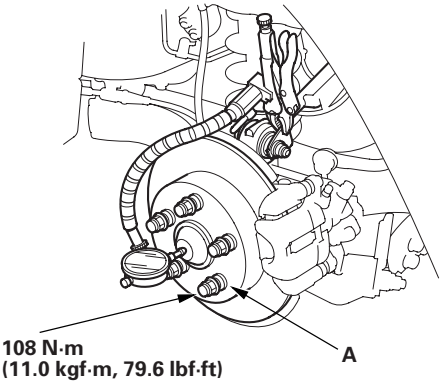

4. Set up the dial gauge against the hub flange as shown, and measure the bearing end play by moving the brake disc inward and outward.

   Bearing end play:
   Standard:
   Front/Rear: 0—0.05 mm (0—0.002 in.)

5. If the bearing end play is more than the standard, replace the wheel bearing.

Wheel Runout Inspection

1. Raise the vehicle, and support it with safety stands in the proper locations (see page 1-12).

2. Check for a bent or deformed wheels.

3. Set up the dial gauge as shown, and measure axial runout by turning the wheel.

   Front and rear wheel axial runout:
   Standard:
   Aluminum wheel: 0—0.7 mm (0—0.03 in.)
   Steel wheel: 0—1.0 mm (0—0.04 in.)
   Service limit: 2.0 mm (0.08 in.)

   Aluminum wheel:

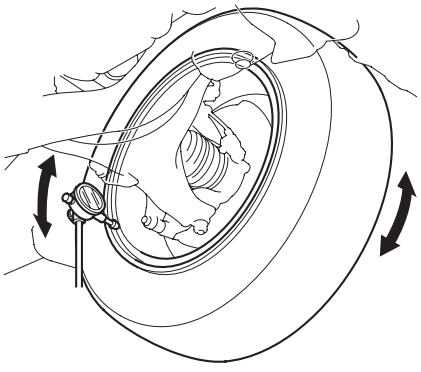

   Steel wheel:

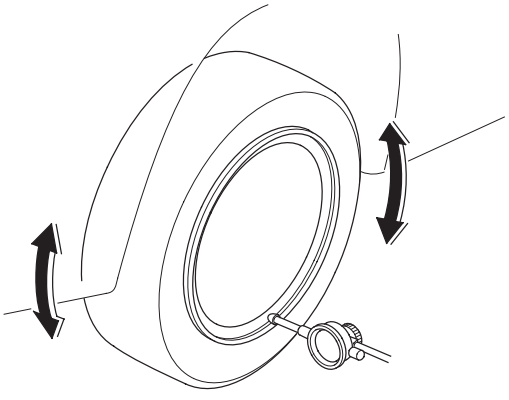

4. Reset the dial gauge to the position shown, and measure the radial runout.

   Front and rear wheel radial runout:
   Standard:
   Aluminum wheel: 0—0.7 mm (0—0.03 in.)
   Steel wheel: 0—1.0 mm (0—0.04 in.)
   Service limit: 1.5 mm (0.06 in.)

   Aluminum wheel:

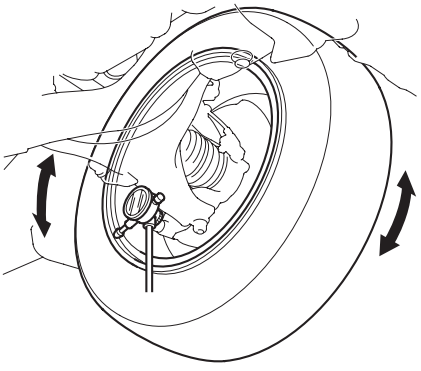

   Steel wheel:

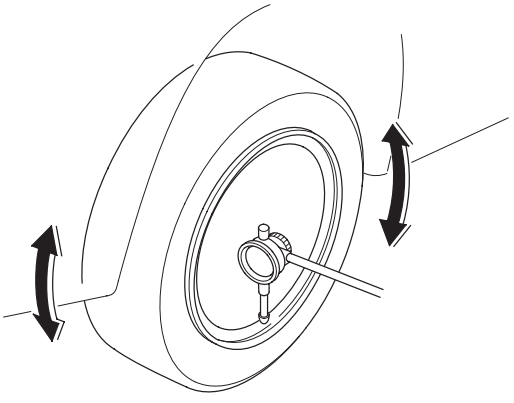

5. If the wheel runout is not within the specification, check the wheel bearing end play (see page 18-8), and make sure the mating surfaces on the brake disc and the inside of the wheel are clean.

6. If the bearing end play is within the specification but the wheel runout is more than the service limit, replace the wheel.

Suspension

Front and Rear Suspension

Special Tools 18-2
Component Location Index 18-3
Wheel Alignment 18-4
Wheel Bearing End Play Inspection 18-8
Wheel Runout Inspection 18-9
Ball Joint Removal 18-10

Front Suspension

Knuckle/Hub/Wheel Bearing Replacement 18-11
Ball Joint Boot Replacement 18-16
Stabilizer Bar Replacement 18-17
Stabilizer Link Removal/Installation 18-18
Lower Arm Removal/Installation 18-19
Damper/Spring Replacement 18-20

Rear Suspension

Hub Bearing Unit Replacement 18-24
Knuckle Replacement 18-26
Stabilizer Bar Replacement 18-28
Stabilizer Link Removal/Installation 18-29
Upper Arm Removal/Installation 18-30
Trailing Arm Removal/Installation 18-31
Damper/Spring Replacement 18-32

Ball Joint Removal

Special Tools Required
Ball joint remover, 28 mm 07MAC-SL0A202

NOTICE
Always use a ball joint remover to disconnect a ball joint. Do not strike the housing or any other part of the ball joint connection to disconnect it.

1. Install a hex nut (A) onto the threads of the ball joint (B). Make sure the nut is flush with the ball joint pin end to prevent damage to the thread end of the ball joint pin.

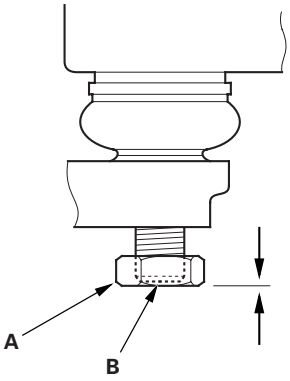

2. Apply grease to the special tool on the areas shown (A). This will ease installation of the tool and prevent damage to the pressure bolt (B) threads.

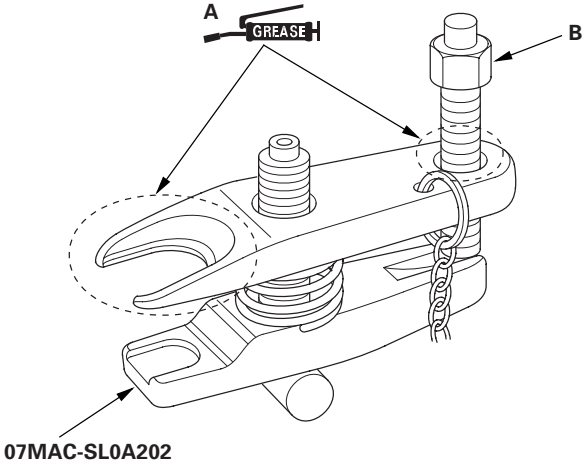

3. Install the special tool as shown. Insert the jaws carefully, making sure not to damage the ball joint boot. Adjust the jaw spacing by turning the pressure bolt (A).

   NOTE: Fasten the safety chain (B) securely to a suspension arm or the subframe (C). Do not fasten it to a brake line or wire harness.

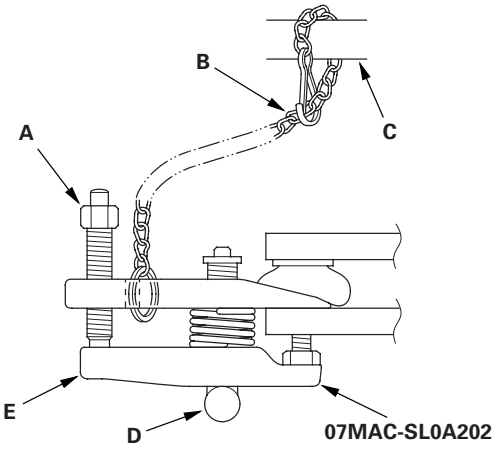

4. After adjusting the adjusting bolt, make sure the head of the adjusting bolt (D) is in the position shown to allow the jaw (E) to pivot.

5. With a wrench, tighten the pressure bolt until the ball joint pin pops loose from the ball joint pin hole. If necessary, apply penetrating type lubricant to loosen the ball joint pin.

   NOTE: Do not use pneumatic or electric tools on the pressure bolt.

6. Remove the tool, then remove the nut from the end of the ball joint pin, and pull the ball joint out of the ball joint pin hole. Inspect the ball joint boot, and replace it if damaged.

Knuckle/Hub/Wheel Bearing Replacement

Exploded View

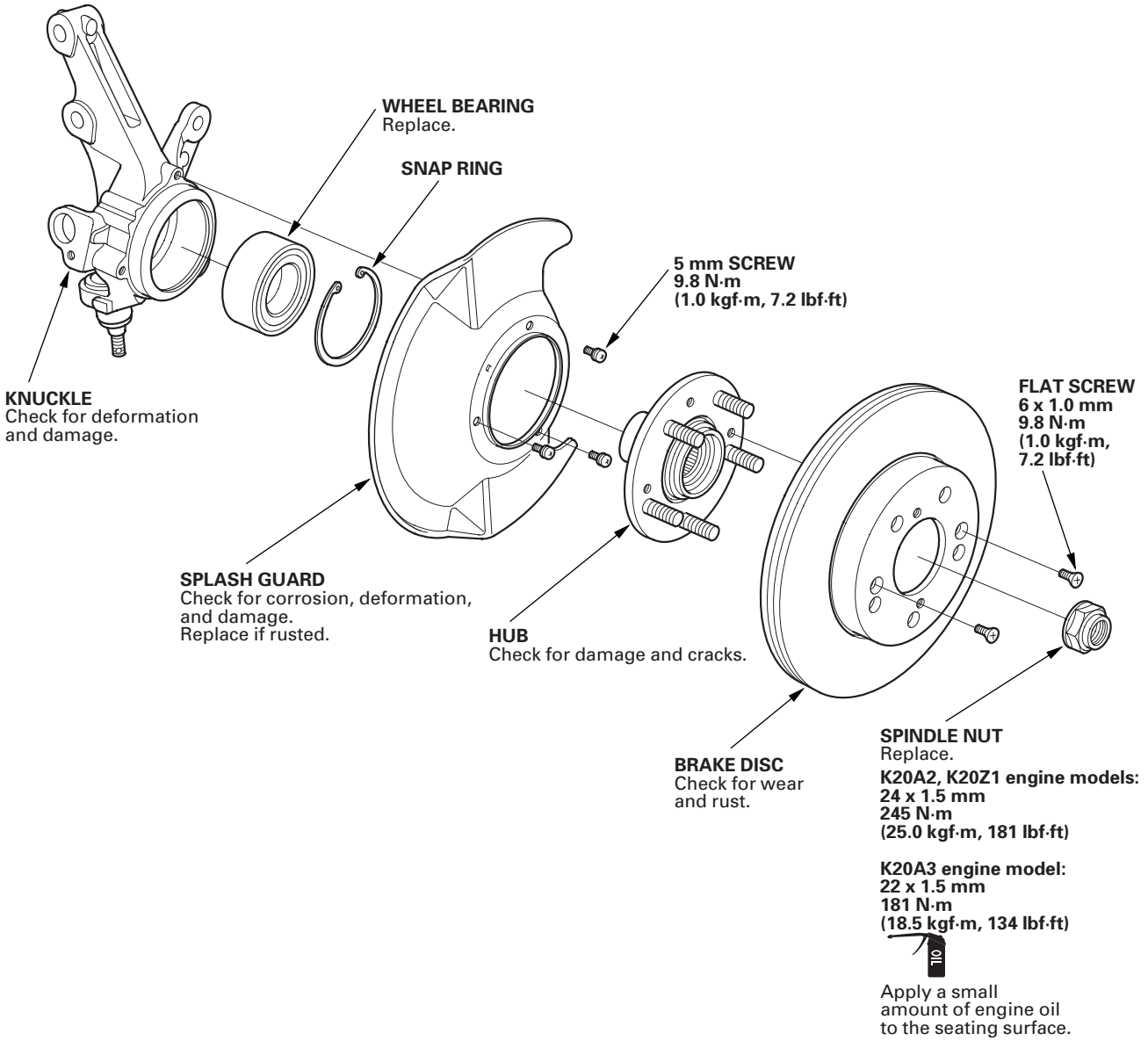

(cont'd)

Knuckle/Hub/Wheel Bearing Replacement (cont'd)

Special Tools Required
- Ball joint thread protector, 12 mm 07AAF-SDAA100
- Ball joint thread protector, 14 mm 071AF-S3VA000
- Hub dis/assembly tool, 42 mm 07GAF-SD40100
- Ball joint remover, 28 mm 07MAC-SL0A202
- Attachment, 62 x 68 mm 07746-0010500
- Driver 07749-0010000
- Support base 07965-SD90100

1. Raise the front of the vehicle, and support it with safety stands in the proper locations (see page 1-12).

2. Remove the wheel cap, wheel nuts, and front wheel.

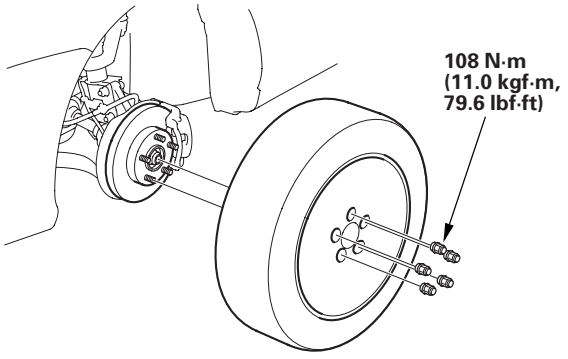

3. Remove the brake hose mounting bolt (A).

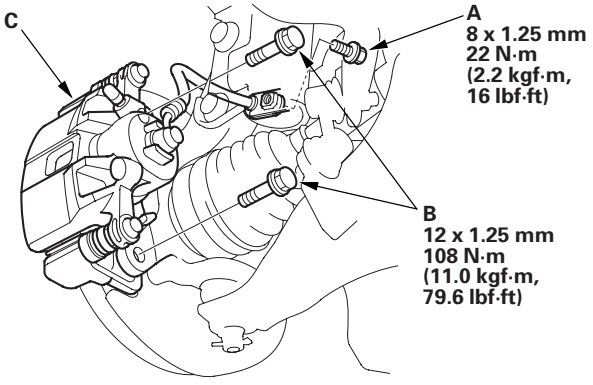

4. Remove the brake caliper bracket mounting bolts (B), and remove the caliper assembly (C) from the knuckle. To prevent damage to the caliper assembly or brake hose, use a short piece of wire to hang the caliper assembly from the undercarriage. Do not twist the brake hose with force.

5. Raise the stake (A), then remove the spindle nut (B).

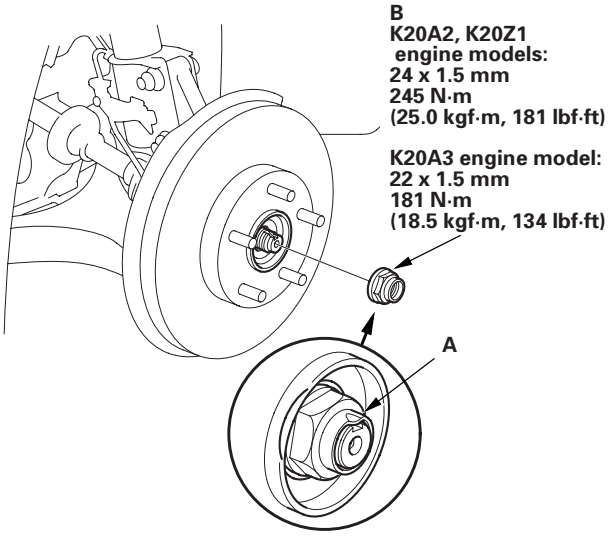

6. Remove the 6 mm brake disc retaining screws (A).

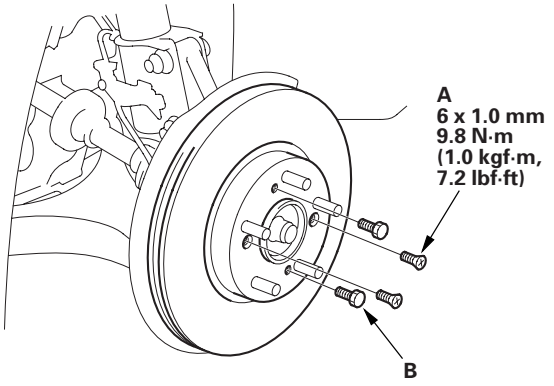

7. Screw two 8 x 1.25 mm bolts (B) into the brake disc to push it away from the hub. Turn each bolt two turns at a time to prevent cocking the disc excessively.

8. Remove the flange bolt (A) and wheel sensor (B) from the knuckle. Do not disconnect the wheel sensor connector.

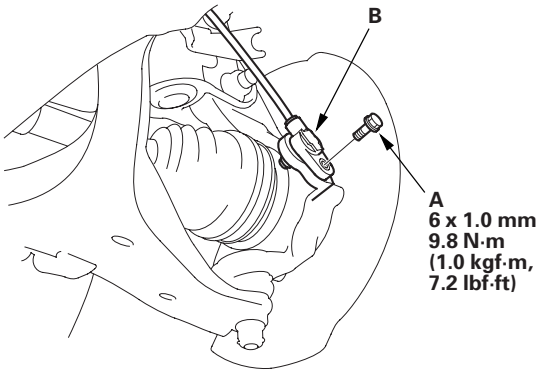

9. Remove the flange nut (A) while holding the joint pin (B) with a hex wrench (C), and disconnect the stabilizer link (D) from the lower arm (E).

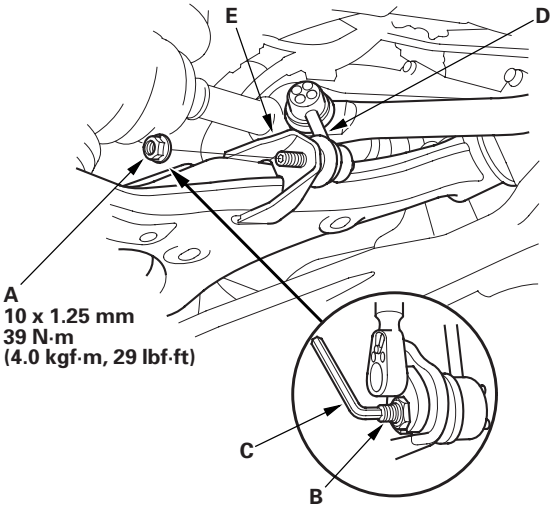

10. Remove the lock pin (A) from the lower arm ball joint, and remove the castle nut (B).

NOTE: During installation, insert the new lock pin as shown after tightening the nut.

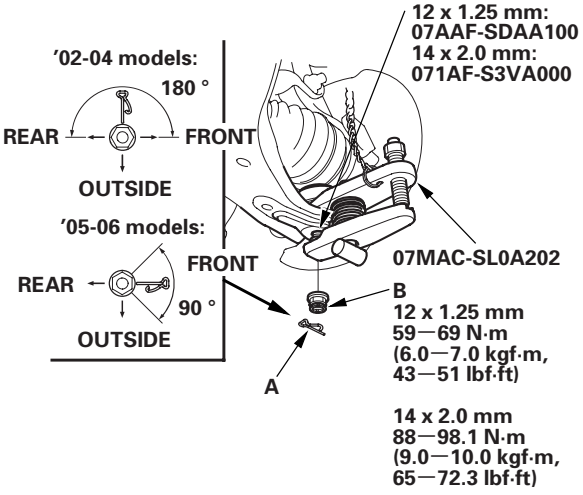

11. Disconnect the lower arm from the knuckle using the special tools (see page 18-10).

12. Loosen the damper pinch bolts (A) while holding the nuts (B), and remove the bolts and the nuts.

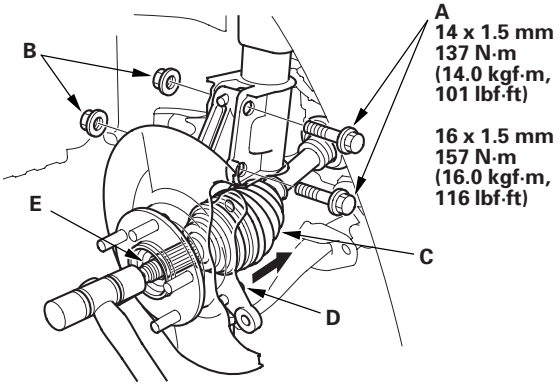

13. Remove the driveshaft outboard joint (C) from the knuckle (D) by tapping the driveshaft end (E) with a plastic hammer while drawing the knuckle outward, then remove the knuckle.

NOTE: Do not pull the driveshaft end outward. The driveshaft joint may come apart.

(cont'd)

Knuckle/Hub/Wheel Bearing Replacement (cont'd)

14. Separate the hub (A) from the knuckle (B) using the special tool and a hydraulic press. Be careful not to deform the splash guard. Hold onto the hub to keep it from falling when pressed clear.

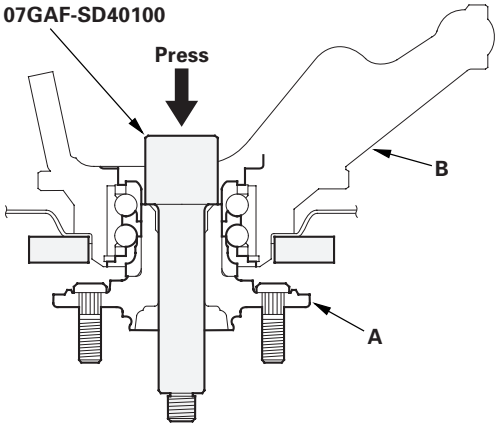

15. Press the wheel bearing inner race (A) off of the hub (B) using the special tool, commercially available bearing separator (C), and a press.

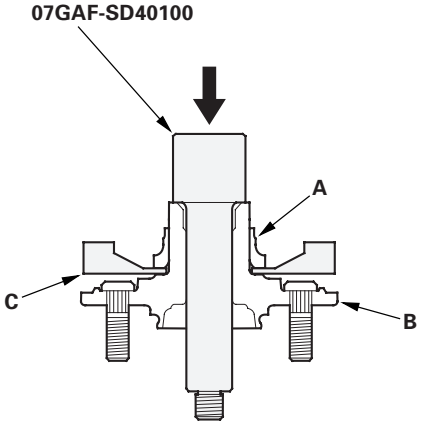

16. Remove the snap ring (A) and the splash guard (B) from the knuckle (C).

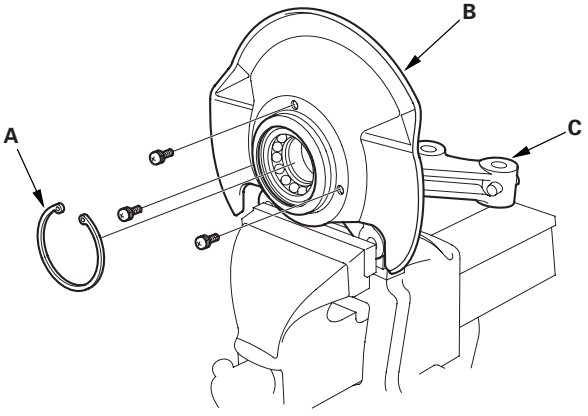

17. Press the wheel bearing (A) out of the knuckle (B) using the special tools and a press.

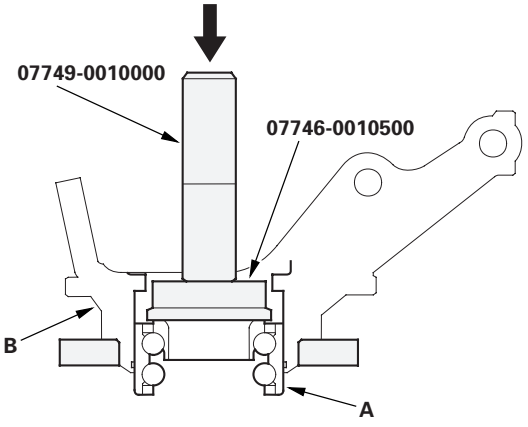

18. Wash the knuckle and hub thoroughly in high flash point solvent before reassembly.

19. Press a new wheel bearing (A) into the knuckle (B) using the old bearing (C), a steel plate (D), the special tool, and a press. Place the wheel bearing on the knuckle with the pack seal side facing (E) (metal color) toward the inside. Be careful not to damage the sleeve of the pack seal.

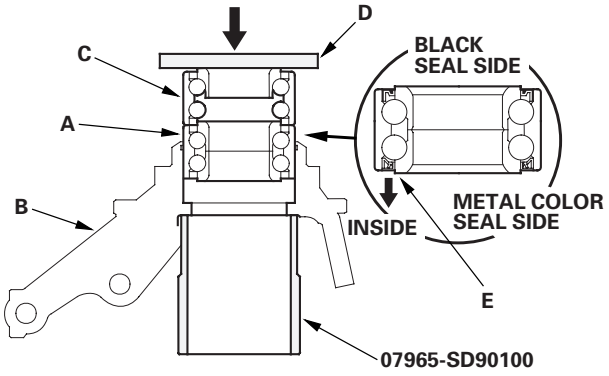

20. Install the snap ring (A) securely in the knuckle (B).

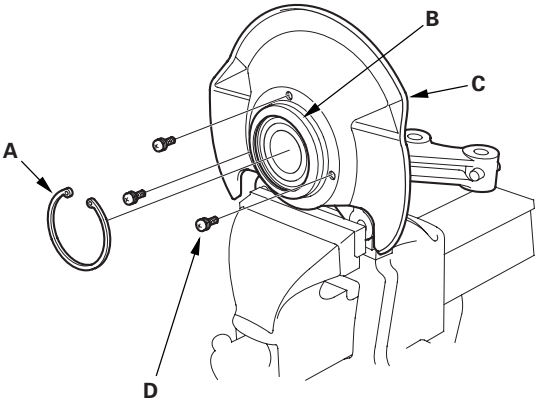

9.8 N·m (1.0 kgf·m, 7.2 lbf·ft)

21. Install the splash guard (C), and tighten the screws (D) to the specified torque value.

22. Press a new hub bearing unit (A) onto the hub (B) using the special tools and a press.

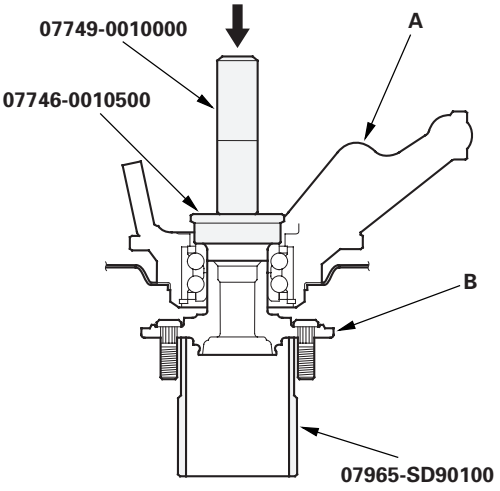

23. Install the knuckle/hub/hub bearing unit in the reverse order of removal, and note these items:

- Be careful not to damage the ball joint boot when installing the knuckle.
- Before connecting the ball joint to the arm, degrease the threaded section and tapered portion of the ball joint pin, and the arm connecting hole, and the threaded section and mating surface of the castle nut.
- First install all the components and lightly tighten the bolts and nuts, then raise the suspension to load it with the vehicle's weight before fully tightening to the specified torque values.
- Tighten all mounting hardware to the specified torque values.
- Torque the castle nut to the lower torque specification, then tighten it only far enough to align the slot with the ball joint pin hole. Do not align the castle nut by loosening it.
- Reinstall the lock pin on the castle nut after torquing.
- Use a new spindle nut on reassembly.
- Before installing the new spindle nut, apply a small amount of engine oil to the seating surface of the nut. After tightening, use a drift to stake the spindle nut shoulder against the driveshaft.
- Before installing the brake disc, clean the mating surface of the front hub and the inside of the brake disc.
- Before installing the wheel, clean the mating surface of the brake disc and the inside of the wheel.
- Check the front wheel alignment, and adjust it if necessary (see page 18-4).

Ball Joint Boot Replacement

Special Tools Required
Front hub dis/assembly tool, 36 mm 07965-SA50500

1. Remove the boot.

2. Pack the interior and lip (A) of a new boot with fresh grease. Keep the grease off of the boot-to-knuckle mating surfaces (B).

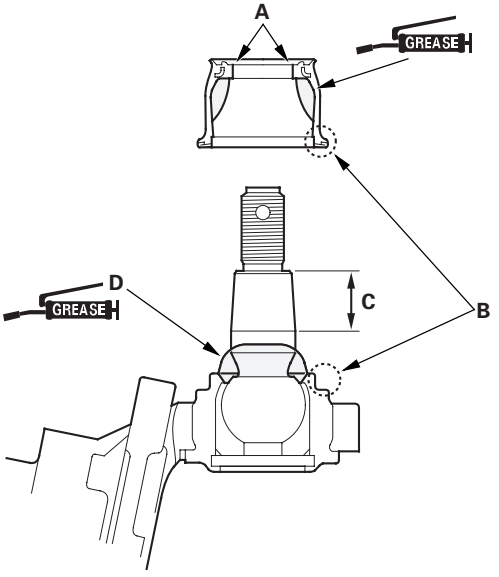

3. Wipe the grease off the tapered section of the pin (C), and pack fresh grease onto the base (D).

4. Install the boot onto the ball joint pin, then squeeze it gently to force out any air. Do not let dirt or other foreign materials get into the boot.

5. Press the boot with the special tool until the bottom seats on the knuckle (A) evenly around.

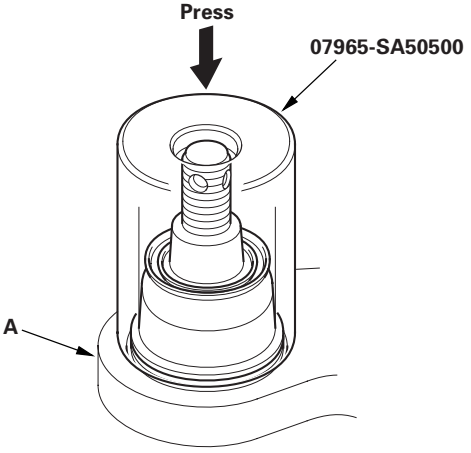

6. After installing a boot, wipe any grease off the exposed portion of the ball joint pin.

Stabilizer Bar Replacement

1. Raise the front of the vehicle, and support it with safety stands in the proper locations (see page 1-12).

2. Remove the front wheels.

3. Remove the self-locking nuts (A) while holding the joint pin (B) with a hex wrench (C), and disconnect the stabilizer links (D) from the stabilizer bar (E) on the right and left.

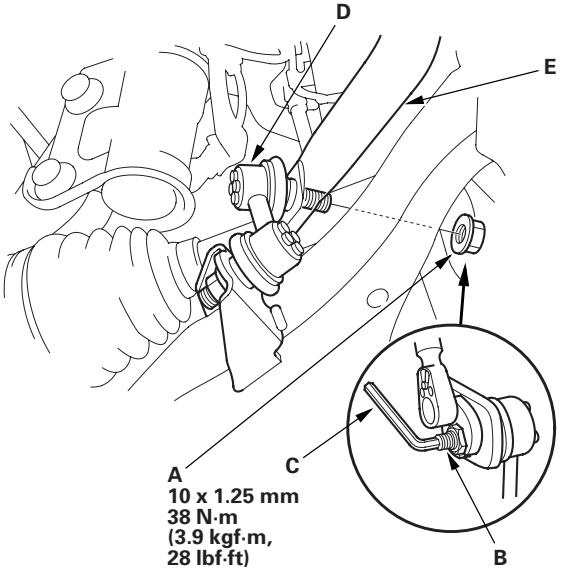

4. Remove the flange bolts (A) and bushing holders (B), then remove the bushings (C) and the stabilizer bar (D).

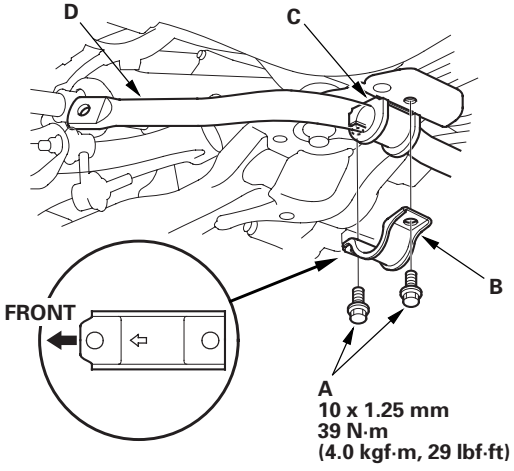

5. Install the stabilizer bar in the reverse order of removal, and note these items:

   - Use new self-locking nuts on reassembly.
   - Note the right and left direction of the stabilizer bar.
   - Align the ends of the paint marks (A) on the stabilizer bar with each end of the bushings (B).
   - Note the fore/aft direction of the bushing holders.
   - Refer to Stabilizer Link Replacement to connect the stabilizer bar to the links (see page 18-18).

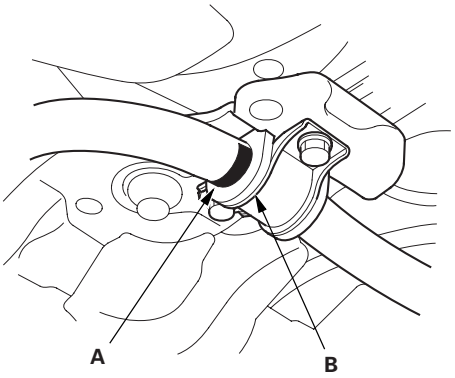

Stabilizer Link Removal/Installation

1. Raise the front of the vehicle, and support it with safety stands in the proper locations (see page 1-12).

2. Remove the front wheel.

3. Remove the self-locking nut (A) and flange nut (B) while holding the respective joint pins (C) with a hex wrench (D), then remove the stabilizer link (E).

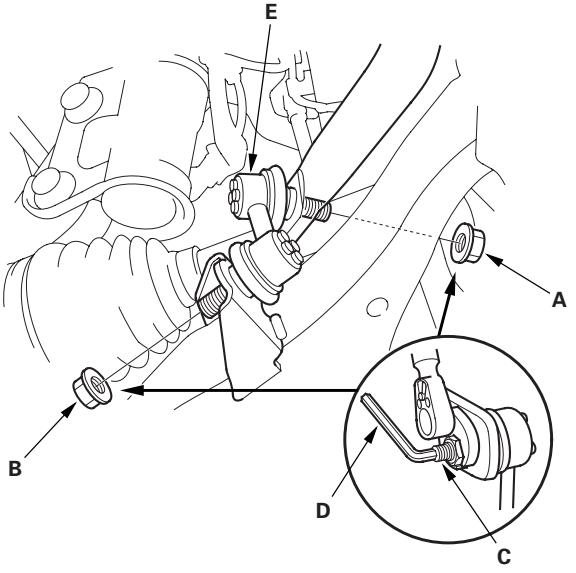

4. Install the stabilizer link (A) on the stabilizer bar (B) and lower arm (C) with the joint pins (D) set at the center of their range of movement.

   NOTE: The left stabilizer link has a yellow paint mark (E), while the right stabilizer link has a white paint mark.

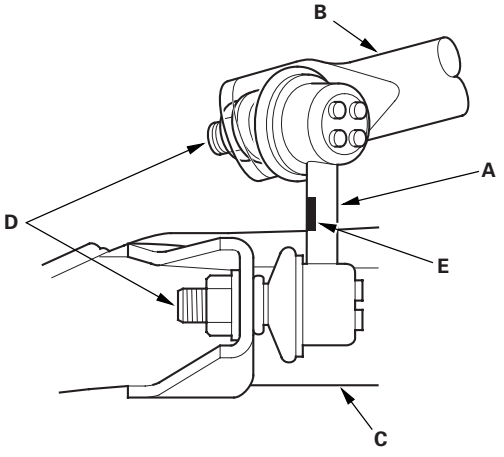

5. Install the self-locking nut and flange nut, and lightly tighten them.

   NOTE: Use a new self-locking nut on reassembly.

6. Place the floor jack under the lower arm ball joint, and raise the suspension to load it with the vehicle's weight.

   NOTICE
   Do not place the jack against the flat section of the lower arm. Lifting the arm in this area might bend it.

7. Tighten the new self-locking nut (A) and flange nut (B) to the specified torque values while holding the respective joint pins (C) with a hex wrench (D).

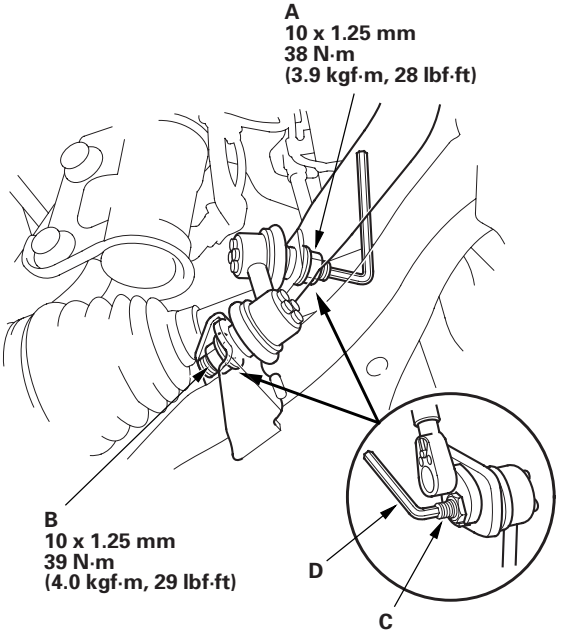

8. Reinstall all removed parts and test drive the vehicle.

9. After 5 minutes of driving, tighten the self-locking nut again to the specified torque values.

Lower Arm Removal/Installation

Special Tools Required
- Ball joint thread protector, 12 mm 07AAF-SDAA100
- Ball joint thread protector, 14 mm 071AF-S3VA000
- Ball joint remover, 28 mm 07MAC-SL0A202

1. Raise the front of the vehicle, and support it with safety stands in the proper locations (see page 1-12).

2. Remove the front wheel.

3. Remove the flange nut (A) while holding the joint pin (B) with a hex wrench (C), and disconnect the stabilizer link (D) from the lower arm (E).

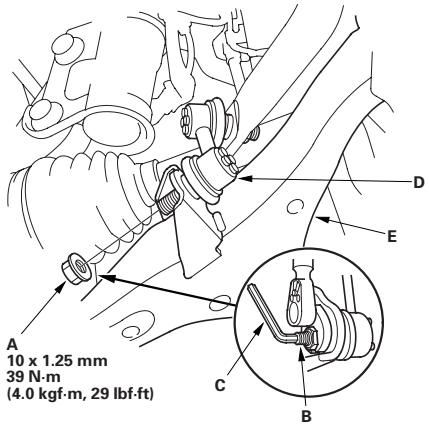

4. Remove the lock pin (A) from the lower arm ball joint, and remove the castle nut (B).

   NOTE: During installation, insert the new lock pin as shown after tightening the nut.

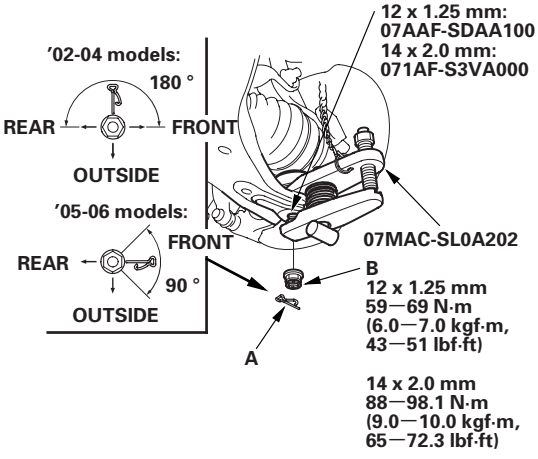

5. Disconnect the lower arm from the knuckle using the special tools (see page 18-10).

6. Remove the flange bolts (A), and remove the lower arm (B).

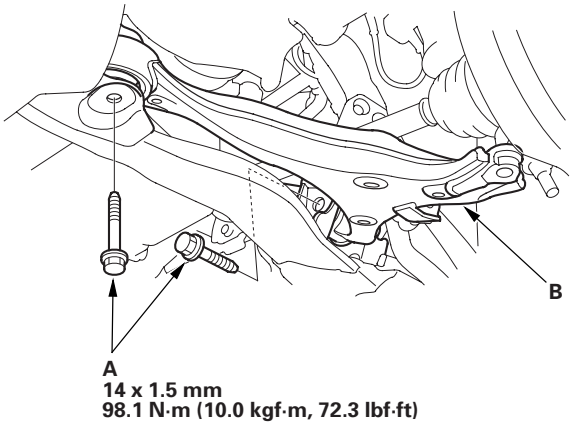

7. Install the lower arm in the reverse order of removal, and note these items:

   - Be careful not to damage the ball joint boot when connecting the lower arm to the knuckle.
   - Before connecting the ball joint to the arm, degrease the threaded section and tapered portion of the ball joint pin, and the arm connecting hole, and the threaded section and mating surface of the castle nut.
   - First install all the components and lightly tighten the bolts and nuts, then raise the suspension to load it with the vehicle's weight before fully tightening it to the specified torque values.
   - Tighten all mounting hardware to the specified torque values.
   - Torque the castle nut to the lower torque specification, then tighten it only far enough to align the slot with the ball joint pin hole. Do not align the castle nut by loosening it.
   - Reinstall the lock pin on the castle nut after torquing.
   - Before installing the wheel, clean the mating surface of the brake disc and the inside of the wheel.
   - Check the wheel alignment, and adjust it if necessary (see page 18-4).

Damper/Spring Replacement

Exploded View

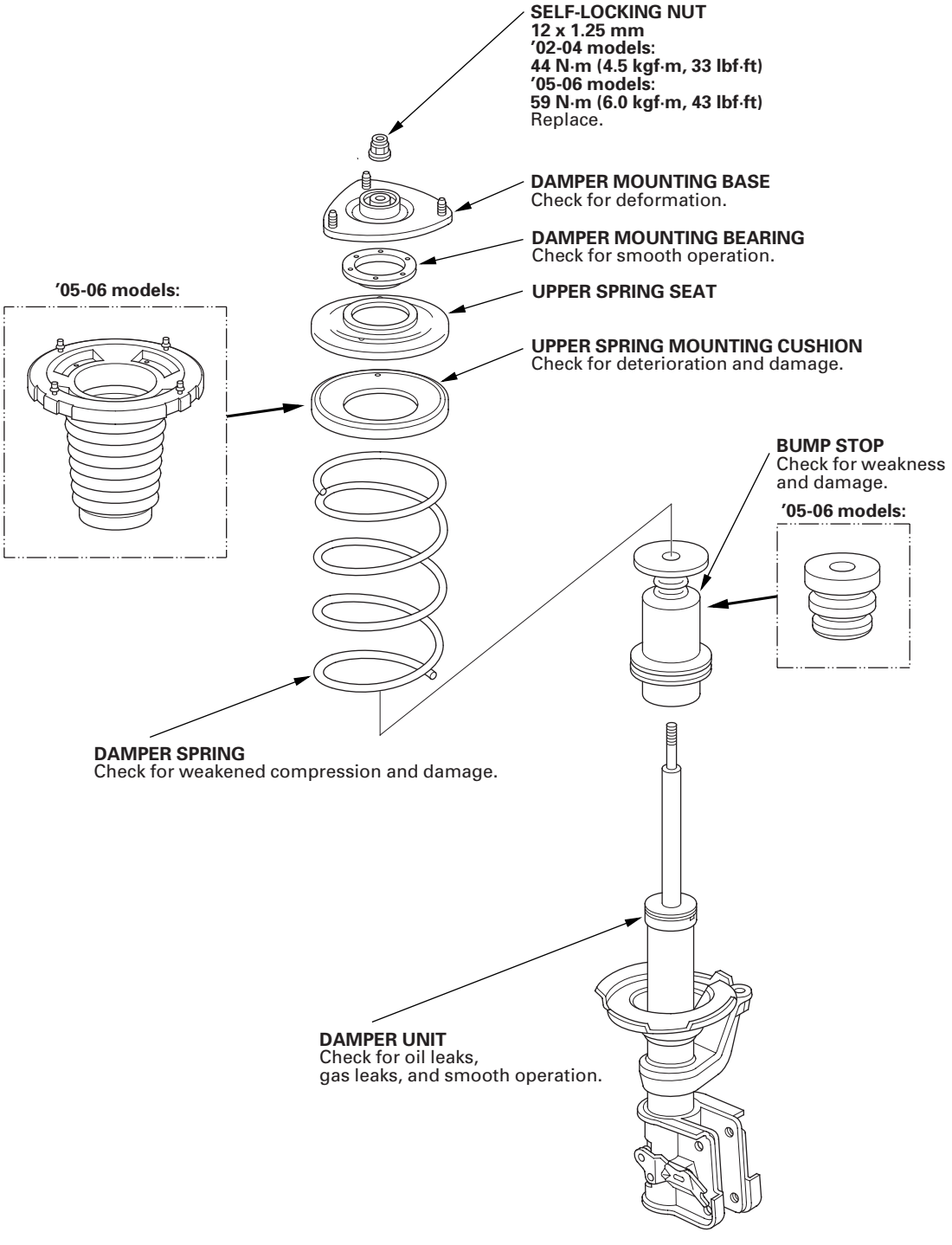

Special Tools Required
• Ball joint thread protector, 12 mm 07AAF-SDAA100
• Ball joint remover, 28 mm 07MAC-SL0A202

NOTE: When compressing the damper spring, use a commercially available strut spring compressor (Branick MST-580A or Model 7200, or equivalent). According to the manufacturer's instructions.

Removal

1. Raise the front of the vehicle, and support it with safety stands in the proper locations (see page 1-12).

2. Remove the front wheel.

3. Remove the cotter pin (A) from the tie-rod end ball joint, and remove the nut (B).

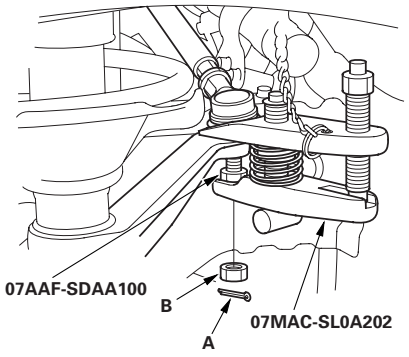

4. Disconnect the tie-rod end from the steering arm on the damper using the special tools (see page 18-10).

5. Remove the bolts, and remove the wheel sensor harness bracket (A) and brake hose bracket (B) from the damper. Do not disconnect the wheel sensor connector.

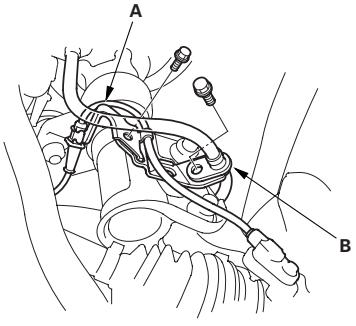

6. Remove the damper pinch bolts (A) while holding the nuts (B).

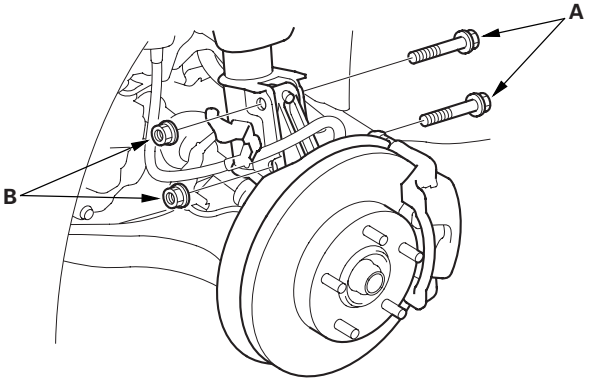

7. Remove the flange nuts (A) from the top of the damper.

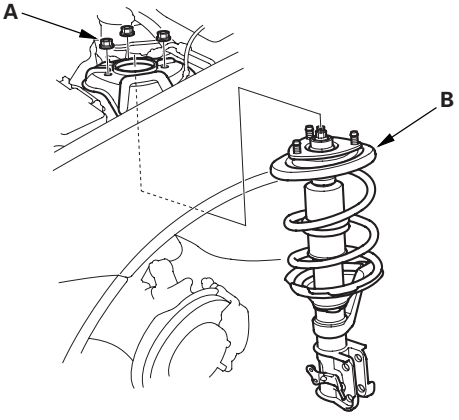

8. Lower the lower arm, then remove the damper assembly (B).

(cont'd)

Damper/Spring Replacement (cont'd)

Disassembly/Inspection

1. Compress the damper spring, then remove the self-locking nut (A) while holding the damper shaft (B) with a hex wrench (C). Do not compress the spring more than necessary to remove the nut.

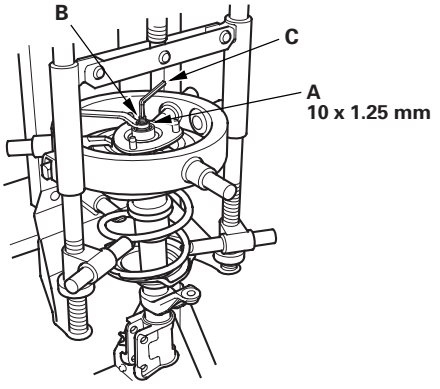

2. Release the pressure from the strut spring compressor, then disassemble the damper as shown in the Exploded View.

3. Reassemble all the parts, except for the upper spring seat and spring.

4. Compress the damper assembly by hand, and check for smooth operation through a full stroke, both compression and extension. The damper should extend smoothly and constantly when compression is released. If it does not, the gas is leaking and the damper should be replaced.

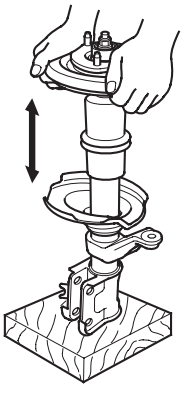

5. Check for oil leaks, abnormal noises, and binding during these tests.

Reassembly

1. Install all the parts except the self-locking nut onto the damper unit by referring to the Exploded View. Align the bottom of the spring (A) and the stepped part of the lower spring seat (B) as illustrated. Align the upper spring seat so that the small hole (C) in it is on the outside when it is installed in the body.

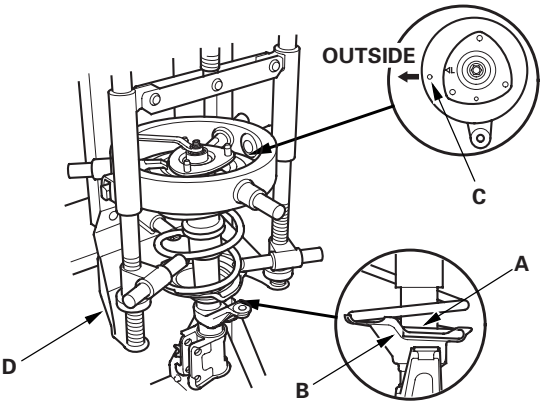

2. Install the damper assembly on commercially available strut spring compressor (D).

3. Compress the damper spring with the spring compressor.

4. Install a new self-locking nut (A) on the damper shaft.

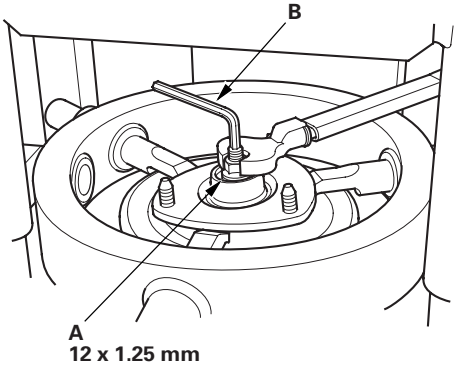

A
12 x 1.25 mm
'02-04 models:
44 N·m (4.5 kgf·m, 33 lbf·ft)
'05-06 models:
59 N·m (6.0 kgf·m, 43 lbf·ft)

5. Hold the damper shaft with a hex wrench (B), and tighten the self-locking nut to the specified torque values.

Installation

1. Lower the lower arm, and position the damper assembly in the body. Turn the damper mounting base so that the ''△L'' or ''△R'' mark (A) faces toward the outside of the vehicle.

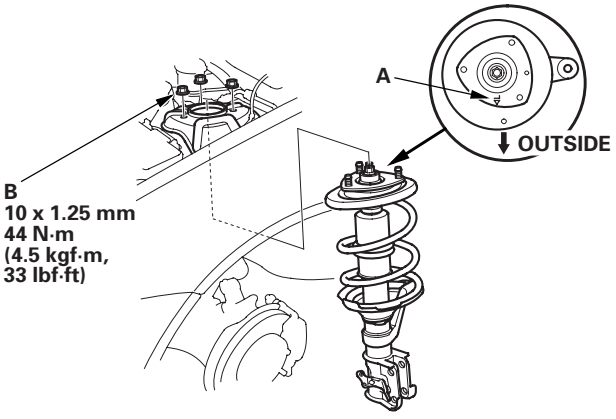

2. Loosely install the flange nuts (B) onto the top of the damper.

3. Position the damper bottom on the knuckle, and install the new damper pinch bolts (A) and nuts (B), and lightly tighten the nuts.

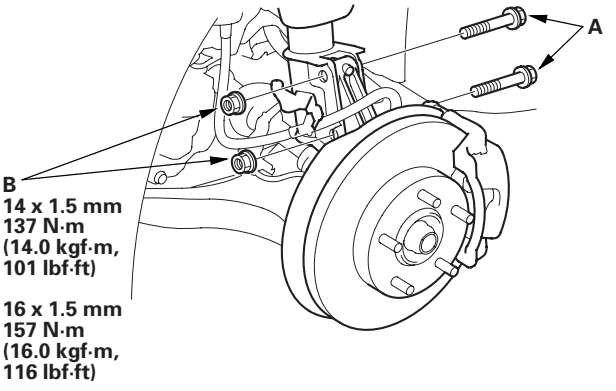

4. Place the floor jack under the lower arm ball joint, and raise the suspension to load it with the vehicle's weight.

NOTICE

Do not place the jack against the flat section of the lower arm. Lifting the arm in this area might bend it.

5. Tighten the flange nuts on the top of the damper to the specified torque value.

6. Tighten the damper pinch nuts to the specified torque value.

7. Connect the tie-rod end to the steering arm, and tighten the nut (A) to the specified torque value. Install the cotter pin (B) after tightening, and bend its end as shown.

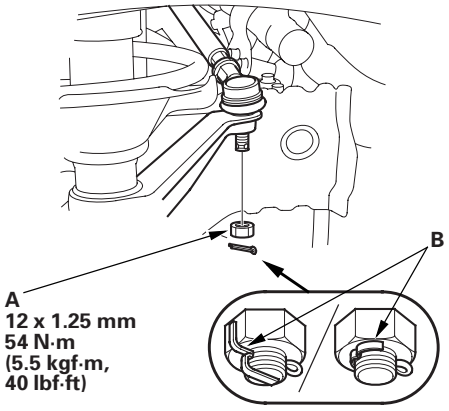

8. Install the brake hose bracket and the flange bolt onto the damper, and tighten the bolt to the specified torque value.

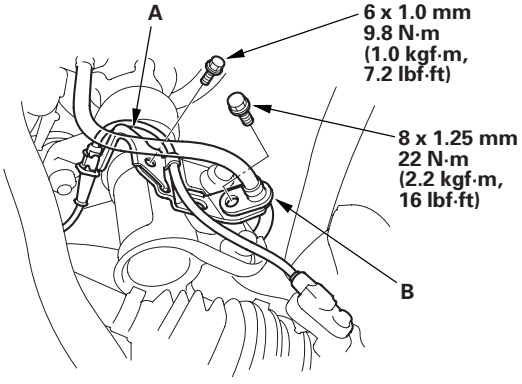

9. Clean the mating surface of the brake disc and the inside of the wheel, then install the front wheels.

10. Check the wheel alignment, and adjust it if necessary (see page 18-4).

Hub Bearing Unit Replacement

Exploded View

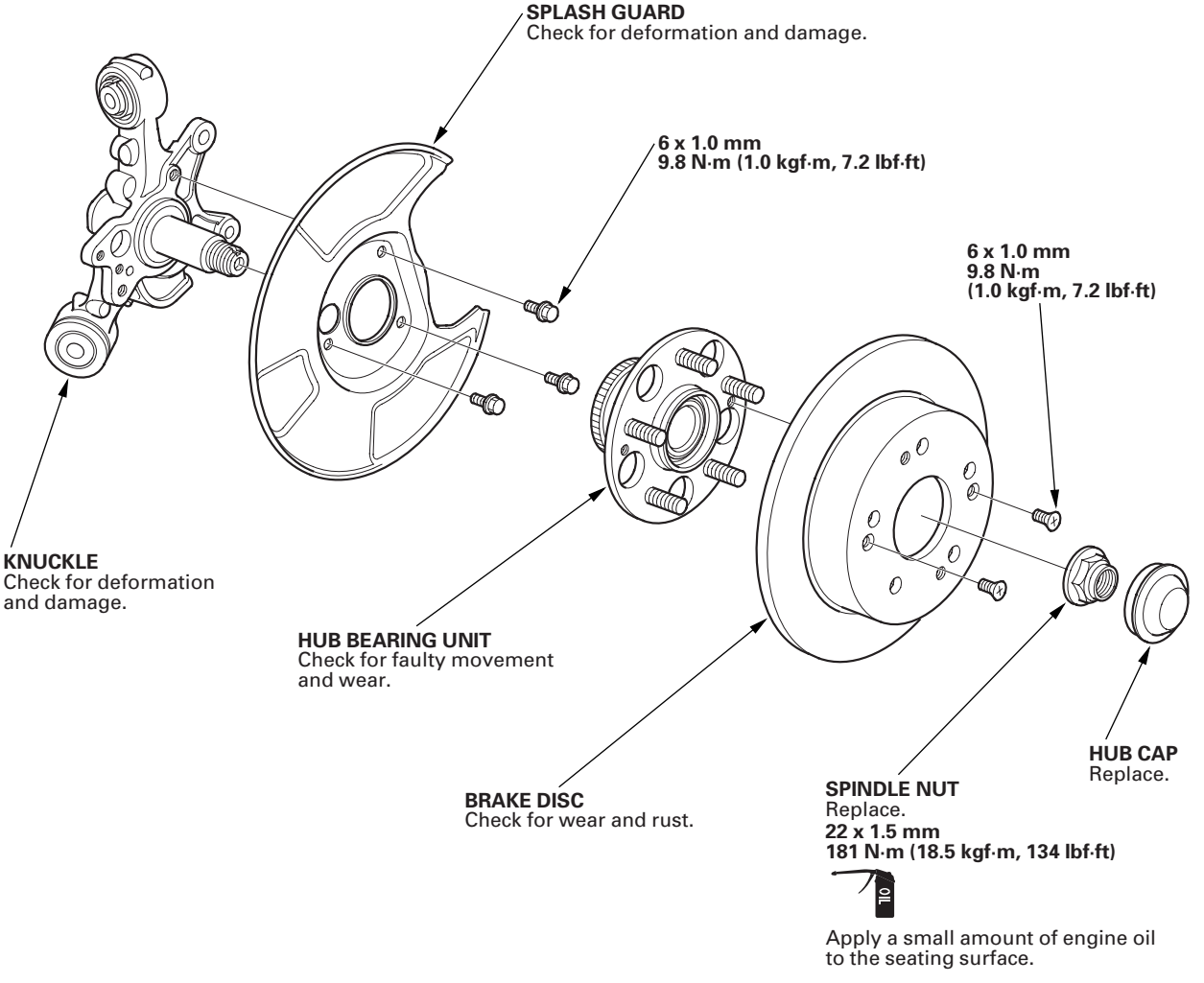

1. Raise the rear of the vehicle, and support it with safety stands in the proper locations (see page 1-12).

2. Remove the wheel cap, wheel nuts, and rear wheel.

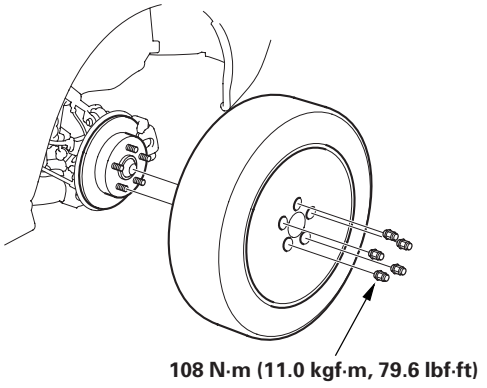

3. Release the parking brake lever.

4. Remove the brake hose mounting bolt (A).

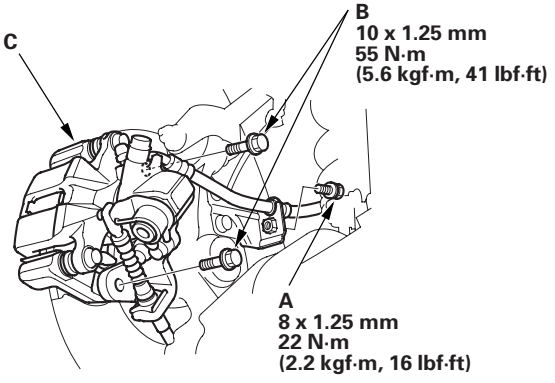

5. Remove the caliper bracket mounting bolts (B), and hang the caliper (C) to one side. To prevent damage to the caliper or brake hose, use a short piece of wire to hang the caliper from the undercarriage.

6. Remove the hub cap (A), raise the stake (B), and remove the spindle nut (C).

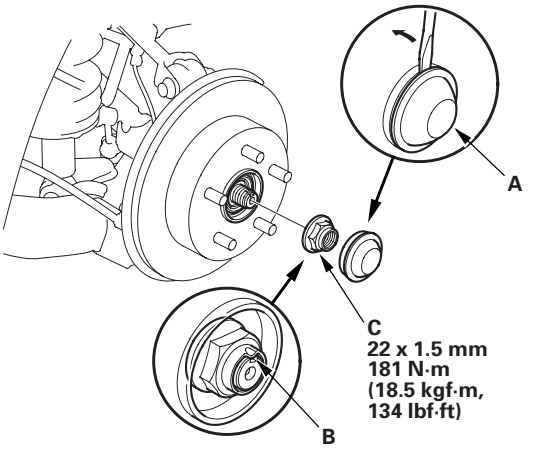

7. Remove the brake disc retaining screws (A).

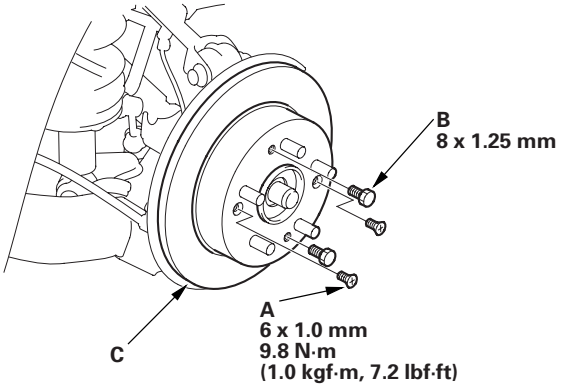

8. Screw two 8 x 1.25 mm bolts (B) into the disc (C) to push it away from the hub. Turn each bolt two turns at a time to prevent cocking the disc excessively. Remove the brake disc.

(cont'd)

Hub Bearing Unit Replacement (cont'd)

9. Remove the hub bearing unit (A) from the spindle.

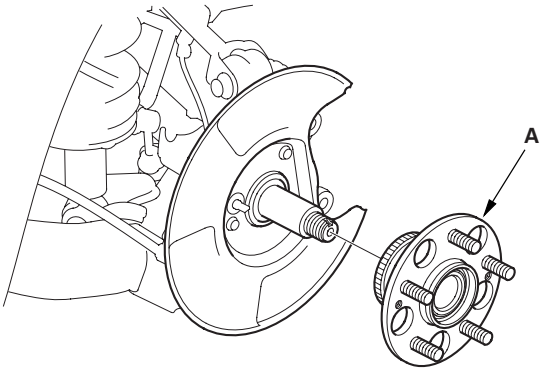

10. Install the hub bearing unit in the reverse order of removal, and note these items:

    - Tighten all mounting hardware to the specified torque values.
    - Use a new spindle nut on reassembly.
    - Wash the spindle thoroughly in high flash point solvent before reassembly.
    - Before installing the spindle nut, apply a small amount of engine oil to the seating surface of the nut. After tightening, use a drift to stake the spindle nut shoulder against the driveshaft.
    - Before installing the brake disc, clean the mating surface of the hub and the inside of the brake disc.
    - Use a new hub cap on reassembly.
    - Before installing the wheel, clean the mating surface of the brake disc and the inside of the wheel.

Knuckle Replacement

1. Raise the rear of the vehicle, and support it with safety stands in the proper locations (see page 1-12).

2. Remove the rear wheel.

3. Remove the brake disc and hub bearing unit (see page 18-24).

4. Remove the flange bolts (A) and splash guard (B) from the knuckle.

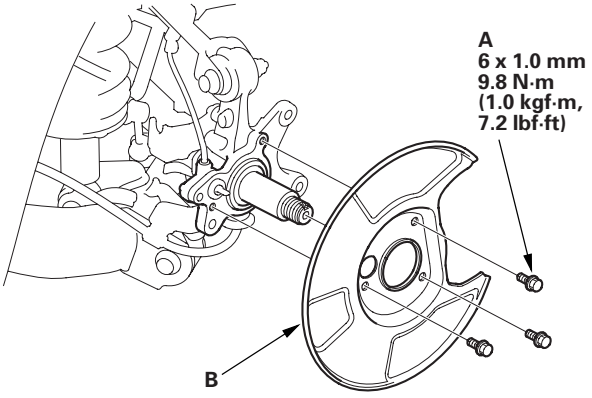

5. Remove the wheel sensor (A), brake hose mounting bracket (B), and parking cable mounting bracket (C) from the knuckle. Do not disconnect the wheel sensor connector.

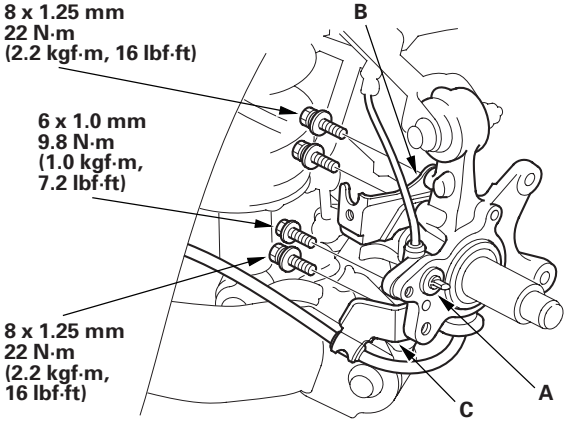

6. Place the floor jack under the trailing arm (A) to support it.

NOTICE

Do not place the jack against the plate section of the lower arm. Be careful not to damage any suspension components.

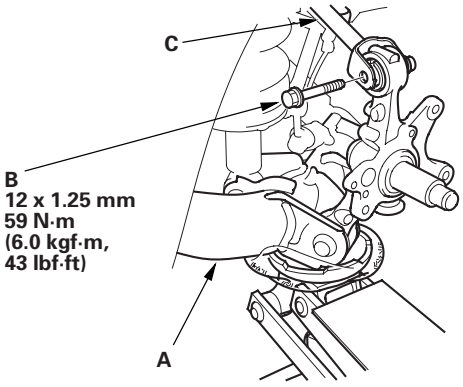

7. Remove the flange bolt (B), then disconnect the upper arm (C) from the knuckle.

8. Mark the cam positions of the adjusting bolt (A) and adjusting cam (B), the remove the self-locking nut (C), adjusting cam, and adjusting bolt. Discard the self-locking nut.

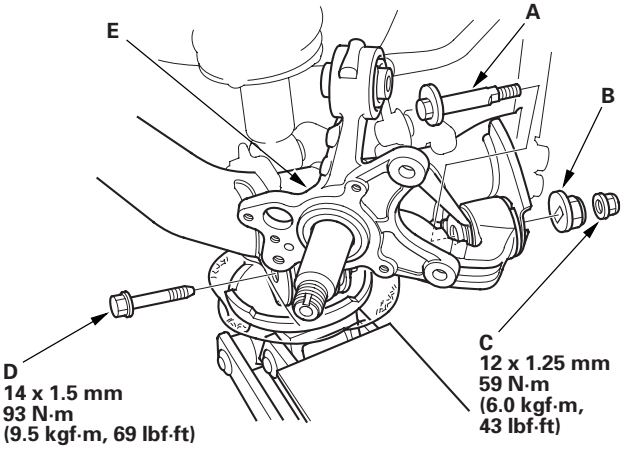

9. Remove the flange bolt (D), and remove the knuckle (E).

10. Install the knuckle in the reverse order of removal, and note these items:

- First install all the suspension components, and lightly tighten the bolts and nuts, then place a floor jack under the lower arm, and raise the suspension to load it with the vehicle's weight before fully tightening the bolts and nuts to the specified torque values.
- Align the cam positions of the adjusting bolt and adjusting cam with the marked positions when tightening.
- Use a new self-locking nut on reassembly.
- Tighten all the mounting hardware to the specified torque values.
- Use a new spindle nut on reassembly.
- Before installing the spindle nut, apply a small amount of engine oil to the seating surface of the nut. After tightening, use a drift to stake the spindle nut shoulder against the driveshaft.
- Before installing the brake disc, clean the mating surface of the hub and the inside of the brake disc.
- Use a new hub cap on reassembly.
- Before installing the wheel, clean the mating surface of the brake disc and the inside of the wheel.
- Check the wheel alignment, and adjust it if necessary (see page 18-4).

Stabilizer Bar Replacement

1. Raise the rear of the vehicle, and support it with safety stands in the proper locations (see page 1-12).

2. Remove the rear wheel.

3. Remove the self-locking nuts (A) while holding the joint pins (B) with a hex wrench (C), and disconnect the stabilizer links (D) from the stabilizer bar (E) on the right and left.

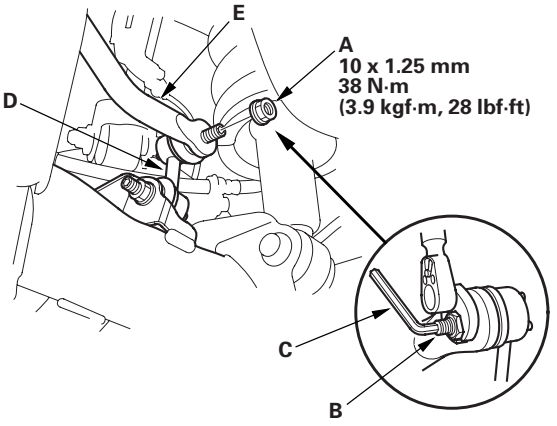

4. Remove the flange bolts (A) and bushing holders (B), then remove the bushings (C) and the stabilizer bar (D).

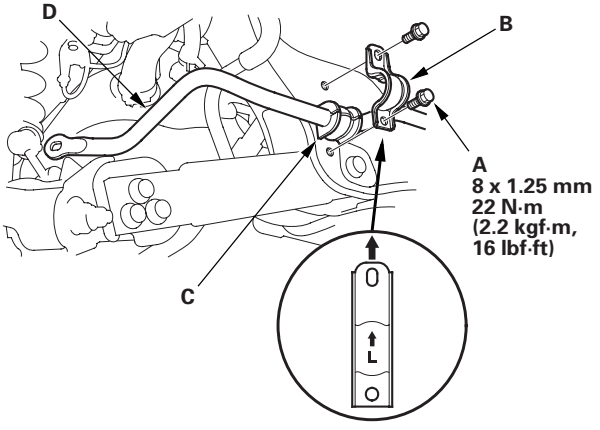

5. Install the stabilizer bar in the reverse order of removal, and note these items:

   - Use new self-locking nuts on reassembly.
   - Make sure the right and left ends of the stabilizer bar are installed on their respective sides of the vehicle.
   - Align the ends of the paint marks (A) on the stabilizer bar with the bushings (B).
   - Refer to Stabilizer Link Replacement (see page 18-29) to connect the stabilizer bar to the links.

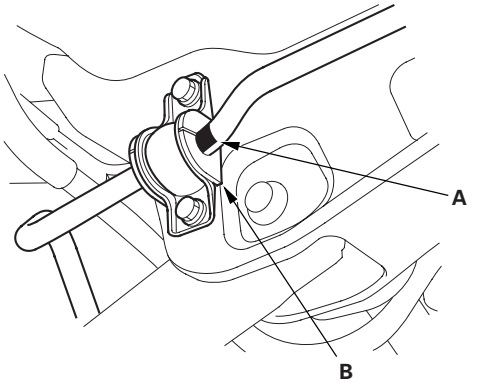

Stabilizer Link Removal/Installation

1. Raise the rear of the vehicle, and support it with safety stands in the proper locations (see page 1-12).

2. Remove the rear wheel.

3. Remove the self-locking nut (A) and flange nut (B) while holding the respective joint pin (C) with a hex wrench (D), then remove the stabilizer link (E).

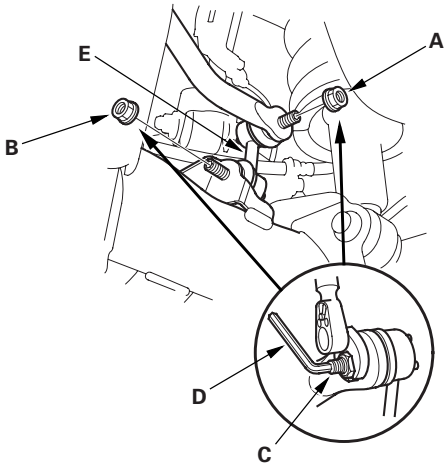

4. Install the stabilizer link (A) on the stabilizer bar (B) and trailing arm with the joint pins set at the center of their range of movement.

   NOTE: The left stabilizer link has a yellow paint mark (C), while the right stabilizer link has a white paint mark.

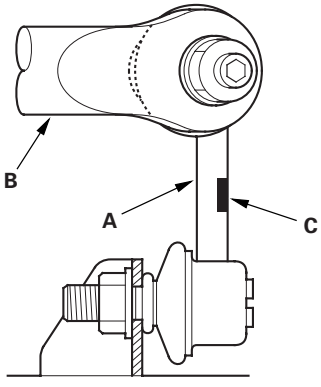

5. Install the self-locking nut and flange nut, and lightly tighten them.

   NOTE: Use a new self-locking nut on reassembly.

6. Place a jack under the trailing arm at the knuckle side end, and raise the suspension to load it with the vehicle's weight.

7. Tighten the new self-locking nut (A) and flange nut (B) to the specified torque values while holding the respective joint pins (C) with a hex wrench (D).

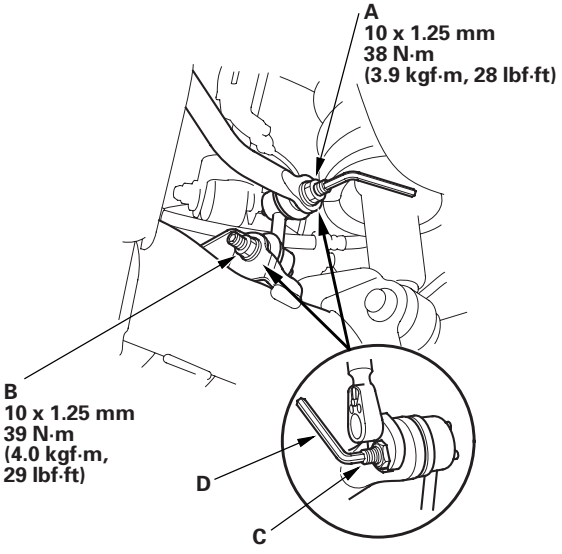

8. Reinstall all removed parts and test drive the vehicle.

9. After 5 minutes of driving, tighten the self-locking nut again to the specified torque values.

Upper Arm Removal/Installation

1. Raise the rear of the vehicle, and support it with safety stands in the proper locations (see page 1-12).

2. Remove the rear wheel.

3. Place a floor jack under the trailing arm, and support the suspension.

4. Remove the flange bolt (A) and wheel sensor harness bracket (B).

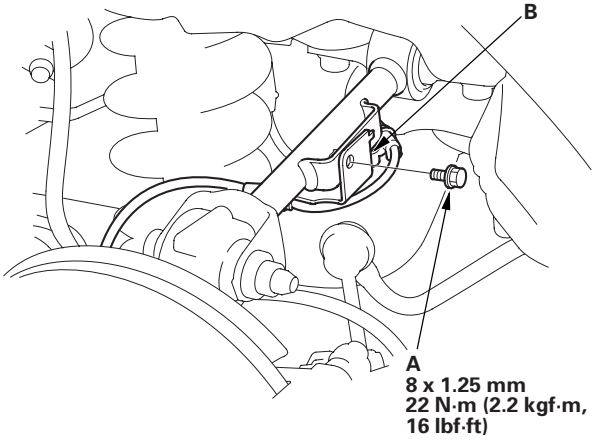

5. Remove the flange bolts (A), and remove the upper arm (B).

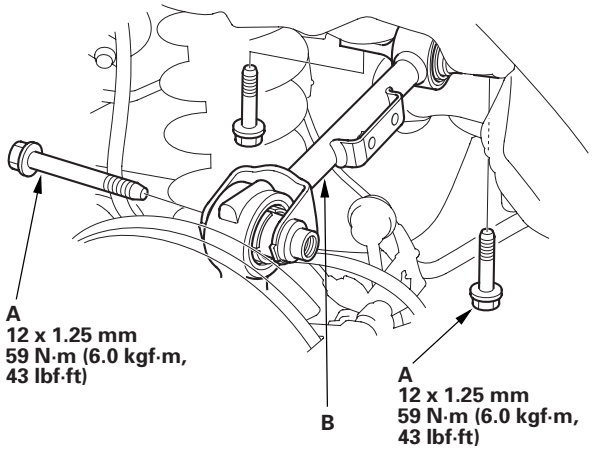

6. Install the upper arm in the reverse order of removal, and note these items:

   - First install all the suspension components and lightly tighten the bolts and nuts, then place a jack under the trailing arm, and raise the suspension to load it with the vehicle's weight before fully tightening the bolts and nuts to the specified torque values.
   - Tighten all the mounting hardware to the specified torque values.
   - Before installing the wheel, clean the mating surface of the brake disc and the inside of the wheel.
   - Check the wheel alignment, and adjust it if necessary (see page 18-4).

Trailing Arm Removal/Installation

1. Raise the rear of the vehicle, and support it with safety stands in the proper locations (see page 1-12).

2. Remove the rear wheel.

3. Remove the knuckle (see page 18-26).

4. Place the floor jack under the trailing arm (A) to support it.

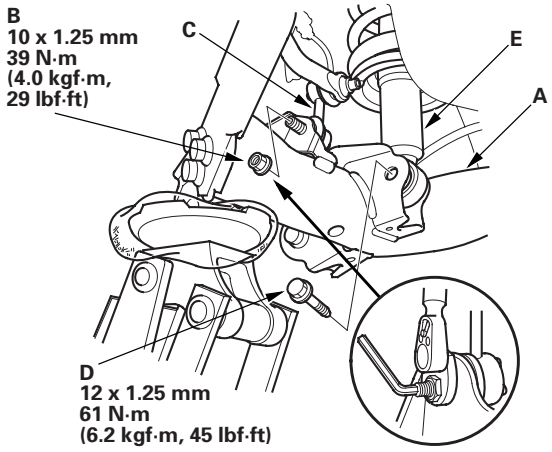

5. Remove the flange nut (B), and disconnect the stabilizer link (C) from the trailing arm.

6. Remove the flange bolt (D), and disconnect the damper (E) from the trailing arm.

7. Remove the trailing arm front mounting bolts (A).

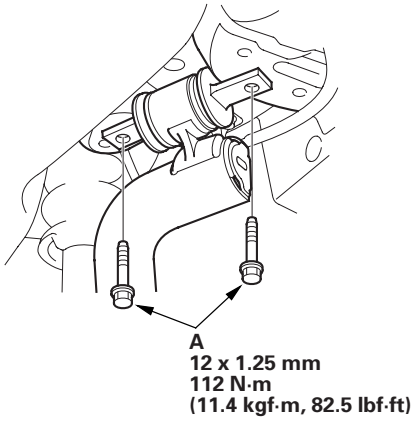

8. Remove the trailing arm rear mounting bolt (A).

NOTICE

Do not loosen the special bolts (B) on the trailing arm.

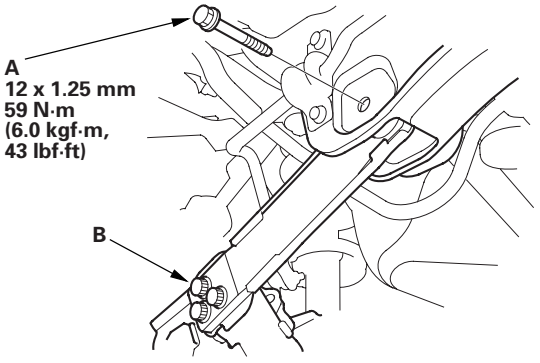

9. Lower the jack, and remove the trailing arm.

10. Install the trailing arm in the reverse order of removal, and note these items:

    - First install all the suspension components and lightly tighten the bolts and nuts, then place a jack under the trailing arm, and raise the suspension to load it with the vehicle's weight before fully tightening the bolts and nuts to the specified torque values.
    - Tighten all the mounting hardware to the specified torque values.
    - Before installing the wheel, clean the mating surface of the brake disc and the inside of the wheel.
    - Check the wheel alignment, and adjust it if necessary (see page 18-4).

Damper/Spring Replacement

Exploded View

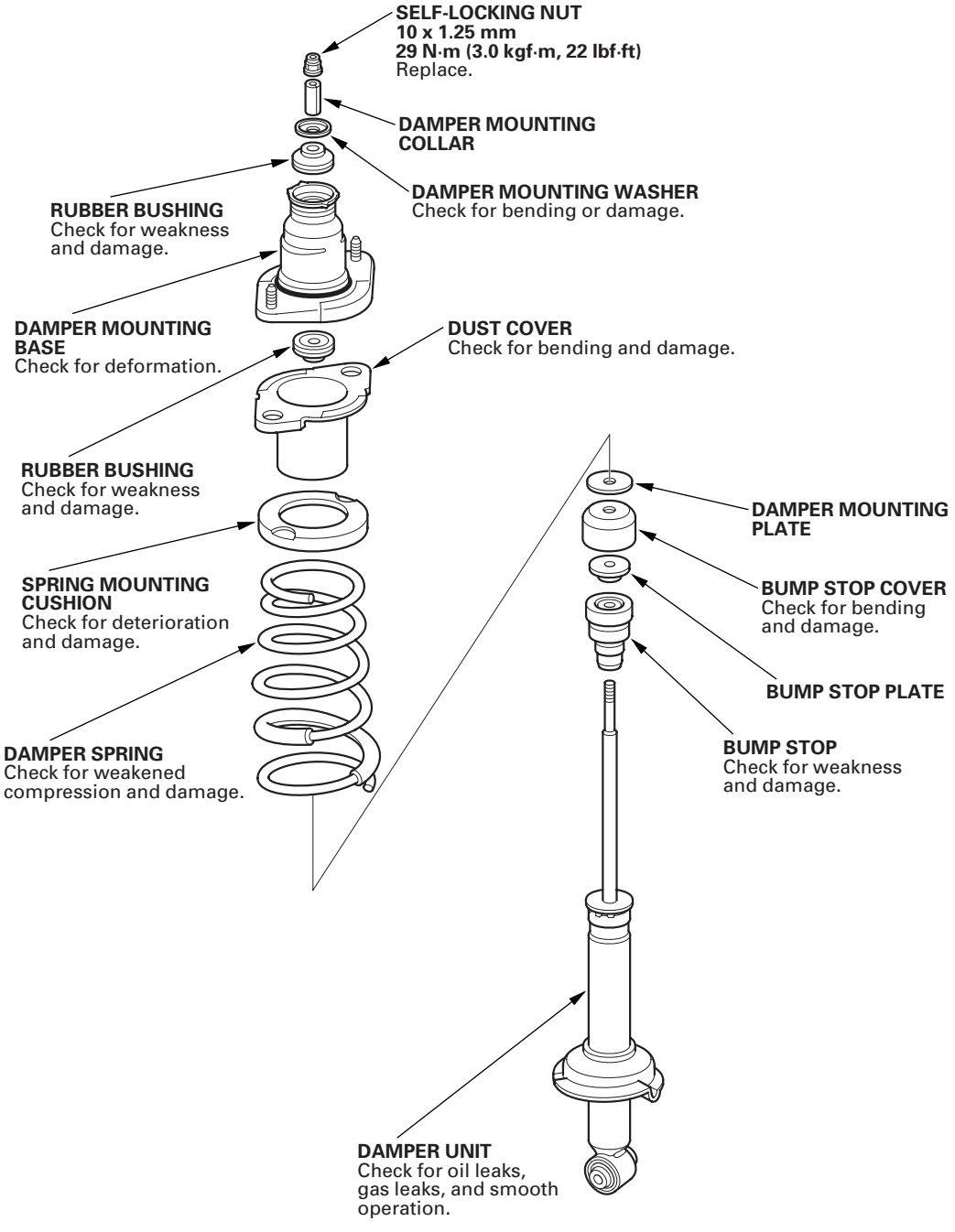

NOTE: When compressing the damper spring, use a commercially available strut spring compressor (Branick MST-580A or Model 7200, or equivalent). According to the manufacturer's instructions.

Removal

1. Raise the rear of the vehicle, and support it with safety stands in the proper locations (see page 1-12).

2. Remove the rear wheel.

3. Remove the flange bolt (A) from the bottom of the damper.

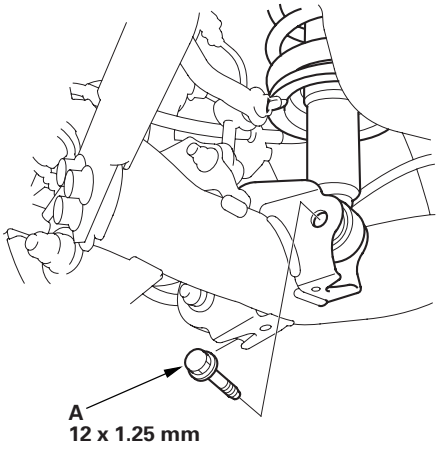

4. Remove the cargo area side trim panel (see page 20-53).

5. Remove the flange nuts (A) from the top of the damper in the trunk.

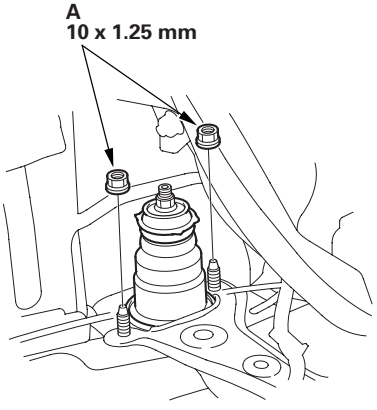

6. Remove the damper assembly from the body.

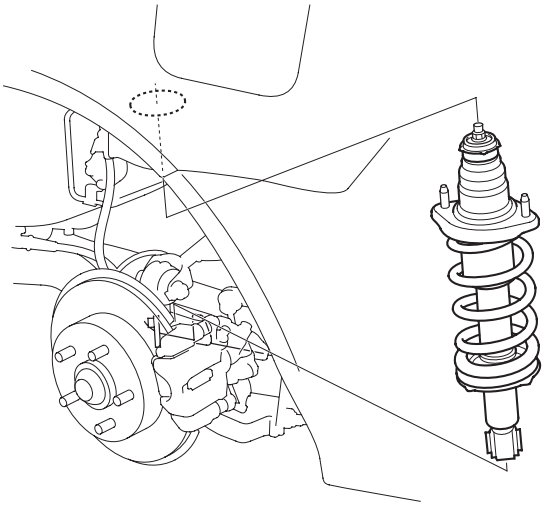

(cont'd)

Damper/Spring Replacement (cont'd)

Disassembly/Inspection

1. Compress the damper spring, then remove the self-locking nut (A) while holding the damper shaft (B) with a hex wrench (C). Do not compress the spring more than necessary to remove the nut.

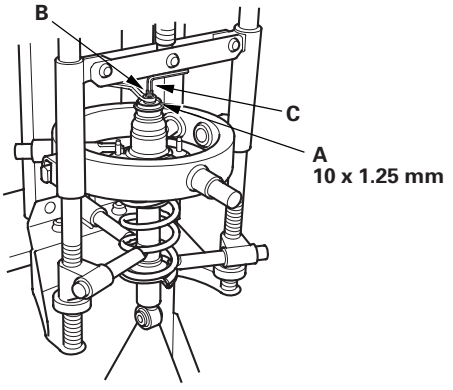

2. Release the pressure from the strut spring compressor, then disassemble the damper as shown in the Exploded View.

3. Reassemble all the parts, except for the spring.

4. Compress the damper assembly by hand, and check for smooth operation through a full stroke, both compression and extension. The damper should extend smoothly and constantly when compression is released. If it does not, the gas is leaking and the damper should be replaced.

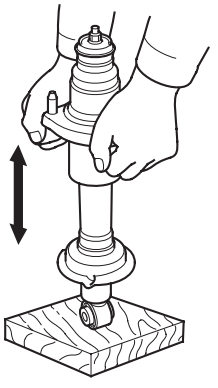

5. Check for oil leaks, abnormal noises, or binding during these tests.

Reassembly

1. Install all the parts except the damper mounting washer and the self-locking nut onto the damper unit by referring to the Exploded View. Align the bottom of the spring (A) and the stepped part of the lower spring seat (B), and align the damper mounting base as shown.

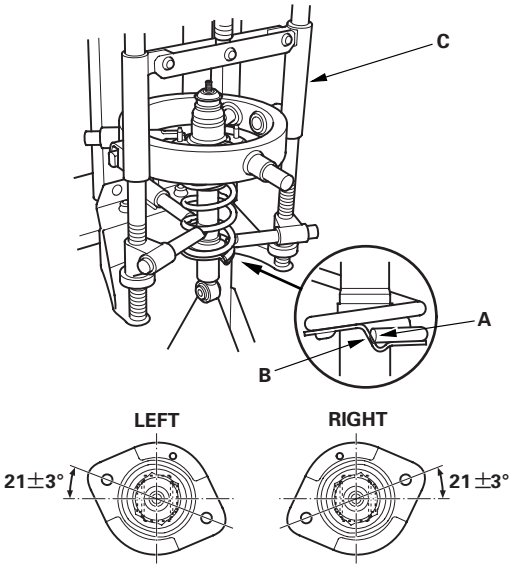

2. Install the damper assembly on commercially available strut spring compressor (C).

3. Compress the damper spring with the spring compressor.

4. Install the washer (A) and a new self-locking nut (B) on the damper shaft.

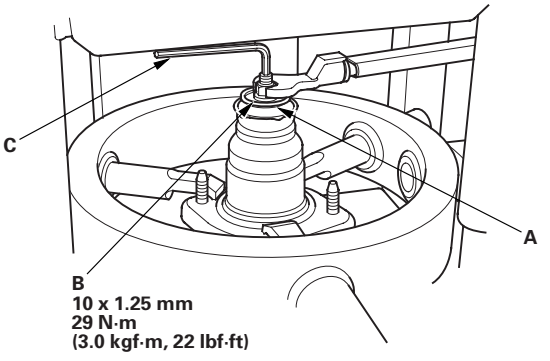

5. Hold the damper shaft with a hex wrench (C), and tighten the self-locking nut to the specified torque value.

Installation

1. Position the damper assembly in the body. Note the direction of the damper mounting base so that the small hole dot on it is toward the front and inside of the vehicle.

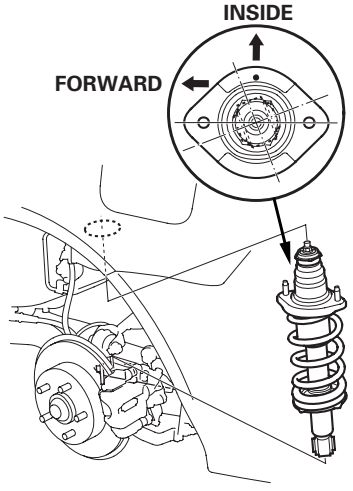

2. Loosely install the flange nuts (A) onto the top of the damper.

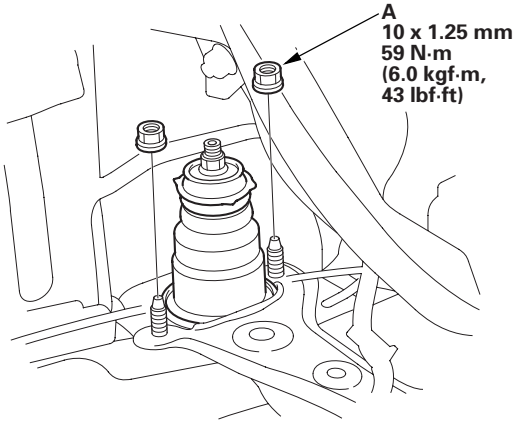

3. Loosely install the flange bolt (A) on the bottom of the damper.

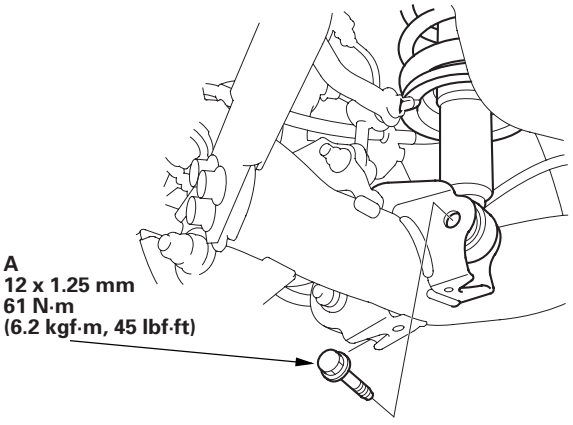

4. Raise the suspension with a floor jack to load the vehicle weight, and tighten the nuts and bolt to the specified torque values.

5. Install the cargo area side trim panel (see page 20-53).

6. Clean the mating surface of the brake disc and the inside of the wheel, then install the rear wheel.

7. Check the wheel alignment, and adjust it if necessary (see page 18-4).

Brakes

Conventional Brake Components

Special Tools 19-2
Component Location Index 19-3
Brake System Inspection and Test 19-4
Symptom Troubleshooting 19-5
Brake Pedal and Brake Pedal Position Switch Adjustment 19-6
Parking Brake Check and Adjustment 19-7
Brake System Bleeding 19-8
Brake System Indicator Circuit Diagram 19-9
Parking Brake Switch Test 19-10
Brake Fluid Level Switch Test 19-10
Front Brake Pad Inspection and Replacement 19-11
Front Brake Disc Inspection 19-13
Front Brake Caliper Overhaul 19-14
Master Cylinder Replacement 19-15
Master Cylinder Inspection 19-16
Brake Booster Pushrod Clearance Adjustment 19-16
Brake Booster Test 19-18
Brake Booster Replacement 19-19
Rear Brake Pad Inspection and Replacement 19-20
Rear Brake Disc Inspection 19-22
Rear Brake Caliper Overhaul 19-23
Brake Hose and Line Inspection 19-24
Brake Hose Replacement 19-25
Parking Brake Cable Replacement 19-26

ABS (Anti-lock Brake System) Components 19-29

Special Tools

Ref. No.	Tool Number	Description	Qty
①	07JAG-SD40100	Pushrod Adjustment Gauge	1

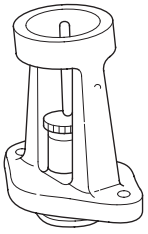

①

Component Location Index

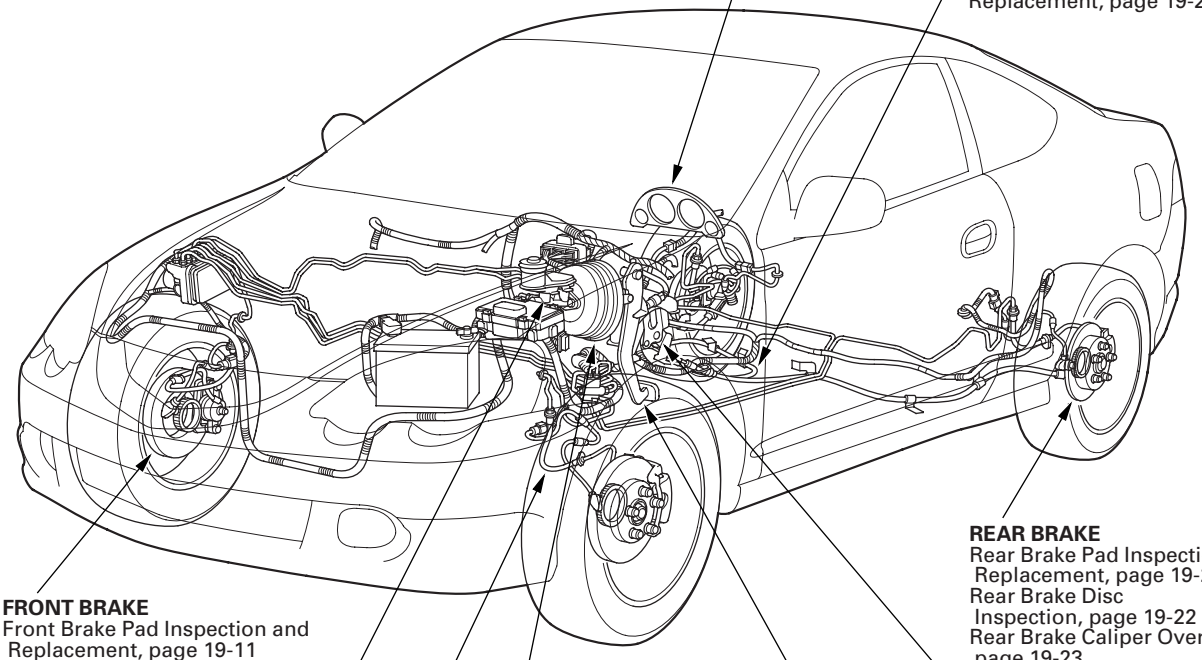

INDICATOR
Brake System Indicator Circuit Diagram, page 19-9
Parking Brake Switch Test, page 19-10
Brake Fluid Level Switch Test, page 19-10

PARKING BRAKE CABLE
Parking Brake Cable Replacement, page 19-26

REAR BRAKE
Rear Brake Pad Inspection and Replacement, page 19-20
Rear Brake Disc Inspection, page 19-22
Rear Brake Caliper Overhaul, page 19-23

FRONT BRAKE
Front Brake Pad Inspection and Replacement, page 19-11
Front Brake Disc Inspection, page 19-13
Front Brake Caliper Overhaul, page 19-14

BRAKE BOOSTER
Brake Booster Pushrod Clearance Adjustment, page 19-16
Brake Booster Test, page 19-18
Brake Booster Replacement, page 19-19

PARKING BRAKE LEVER
Parking Brake Check and Adjustment, page 19-7

BRAKE PEDAL
Brake Pedal and Brake Pedal Position Switch Adjustment, page 19-6

BRAKE HOSE/LINE
Brake Hose and Line Inspection, page 19-24
Brake Hose Replacement, page 19-25

MASTER CYLINDER
Brake System Bleeding, page 19-8
Master Cylinder Replacement, page 19-15
Master Cylinder Inspection, page 19-16

Brake System Inspection and Test

Inspect the brake system components listed. Repair or replace any parts that are leaking or damaged.

Component Inspections:

Component	Procedure	Also check for:
Master Cylinder	Look for damage or signs of fluid leakage at: • Reservoir or reservoir grommets • Line joints • Between master cylinder and booster	Bulging seal at reservoir cap. This is a sign of fluid contamination.
Brake Hoses	Look for damage or signs of fluid leakage at: • Line joints and banjo bolt connections • Hoses and lines, also inspect for twisting or damage	Bulging, twisted, or bent lines.
Caliper	Look for damage or signs of fluid leakage at: • Piston seal • Banjo bolt connections • Bleed screw	Seized or sticking caliper pins.
ABS Modulator-Control Unit	Look for damage or signs of fluid leakage at: • Line joints • Modulator-control unit	

Brake System Test

Brake pedal sinks/fades when braking

1. Start the engine, and let it warm up to operating temperature.

2. Attach a 50 mm (2 in.) piece of masking tape along the bottom of the steering wheel, and draw a horizontal reference mark across it.

3. With the transmission in Neutral, press and hold the brake pedal lightly (about the same pressure needed to keep an A/T-equipped car from creeping), then release the parking brake.

4. While still holding the brake pedal, hook the end of the tape measure behind it. Then pull the tape up to the steering wheel, noting where the tape measure lines up with the reference mark you made on the masking tape.

5. Apply steady pressure to the brake pedal for 3 minutes.

6. Watch the tape measure.

   • If it moves less than 10 mm (3/8 in.), the master cylinder is OK.
   • If it moves more than 10 mm (3/8 in.), replace the master cylinder.

   NOTE: If the brake pedal sinks more than 10 mm (3/8 in.) in 3 minutes, the master cylinder is faulty. A slight change in pedal height when the A/C compressor cycles on and off is normal. (The A/C compressor load changes the vacuum available to the brake booster.)

Symptom Troubleshooting

Rapid brake pad wear, vehicle vibration (after a long drive), or high hard brake pedal

1. Drive the vehicle until the brakes drag or until the pedal is high and hard. This can take 20 or more brake pedal applications during an extended test-drive.

2. With the engine running, raise the vehicle on a lift, and spin all four wheels by hand.

   Is there brake drag at any of the wheels?

   YES—Go to step 3.

   NO—Look for other causes of the pad wear, high pedal, or vehicle vibration. ■

3. Turn the engine off, pump the brake pedal to deplete the vacuum in the brake booster, and then spin the wheels again to check for brake drag.

   Is there brake drag at any of the wheels?

   YES—Go to step 4.

   NO—Replace the brake booster (see page 19-19). ■

4. Without removing the brake lines, unbolt and separate the master cylinder from the booster, then spin the wheels to check for brake drag.

   Is there brake drag at any of the wheels?

   YES—Go to step 5.

   NO—Check the brake pedal position switch adjustment and pedal free play (see page 19-6). ■

5. Loosen the hydraulic lines at the master cylinder, then spin the wheels to check for brake drag.

   Is there brake drag at any of the wheels?

   YES—Go to step 6.

   NO—Replace the master cylinder (see page 19-15). ■

6. Loosen the bleed screws at each caliper, then spin the wheels to check for brake drag.

   Is there brake drag at any of the wheels?

   YES—Disassemble and repair the caliper on the wheel(s) with brake drag. ■

   NO—Look for and replace any damaged brake lines. If all brake lines are OK, replace the ABS modulator-control unit. ■

Brake Pedal and Brake Pedal Position Switch Adjustment

Pedal Height

1. Disconnect the brake pedal position switch connector, turn the brake pedal position switch (A) counterclockwise, and pull it back until it is no longer touching the brake pedal.

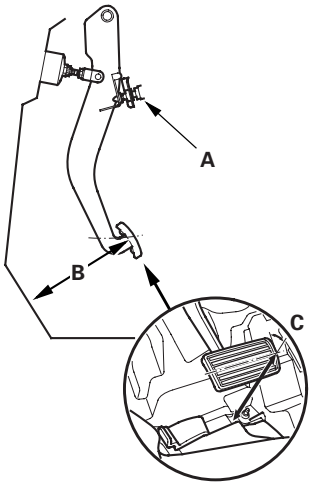

2. Lift up the carpet. At the insulator cutout, measure the pedal height (B) from the middle of the right side of the pedal pad (C).

   Standard pedal height (with carpet removed):
   M/T: 180 mm (7 1/16 in.)
   A/T: 183 mm (7 3/16 in.)

3. Loosen the pushrod locknut (A), and screw the pushrod in or out on the knurled area (B) of the pushrod with pliers until the standard pedal height from the floor is reached. After adjustment, tighten the locknut firmly. Do not adjust the pedal height with the pushrod pressed.

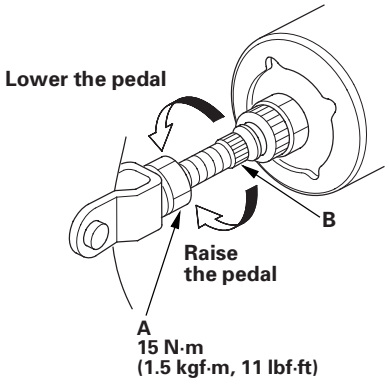

4. Spin the wheels to check for brake drag.

Pedal Free Play

1. With the engine stopped, inspect the pedal free play (A) on the pedal pad (B) by pushing the brake pedal by hand.

   Free play: 1—5 mm (1/16—3/16 in.)

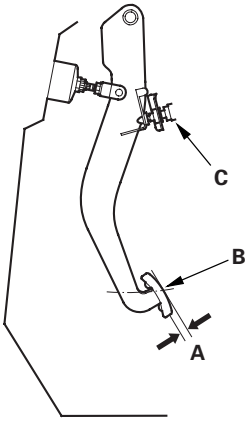

2. If the pedal free play is out of specification, adjust the brake pedal position switch (C). If the pedal free play is insufficient, it may result in brake drag.

Brake Pedal Position Switch Clearance

1. Push in the brake pedal position switch until its plunger is fully pressed (threaded end (A) touching the pad (B) on the pedal arm). Then, turn the brake pedal position switch 45° clockwise to lock it. The gap between the brake pedal position switch and the pad is automatically adjusted to 0.4 to 3.0 mm (0.016 to 0.118 in.) by locking the switch. Make sure the brake lights go off when the pedal is released.

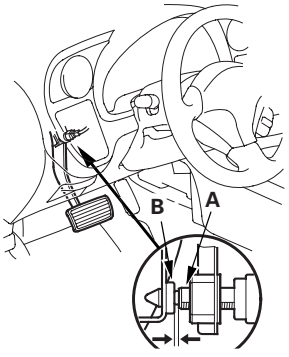

0.4 to 3.0 mm (0.016 to 0.118 in.)

2. Check the brake pedal free play.

Parking Brake Check and Adjustment

Check

1. Pull the parking brake lever (A) with 196 N (20 kgf, 44 lbf) of force to fully apply the parking brake. The parking brake lever should be locked within the specified number of clicks (B).

   Lever locked clicks: 7 to 9

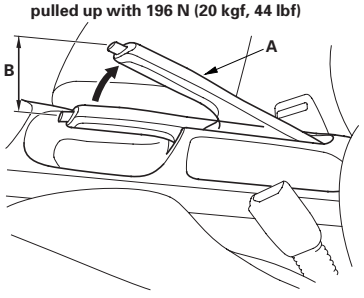

2. Adjust the parking brake if the lever clicks are not within the specification.

Adjustment

1. Release the parking brake lever fully.

2. Loosen the parking brake adjusting nut, start the engine, and press the brake pedal several times to set the self-adjusting brake before adjusting the parking brake.

3. Raise the rear of the vehicle, and support it with safety stands in the proper locations (see page 1-12).

4. Remove the rear wheels.

5. Make sure the parking brake arm (A) on the rear brake caliper contacts the brake caliper pin (B).

   NOTE: The parking brake arm will only contact the brake caliper pin when the parking brake adjusting nut is loosened.

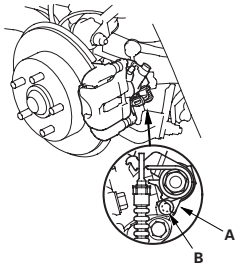

6. Remove the center console rear cover (see page 20-62).

7. Pull the parking brake lever up one click.

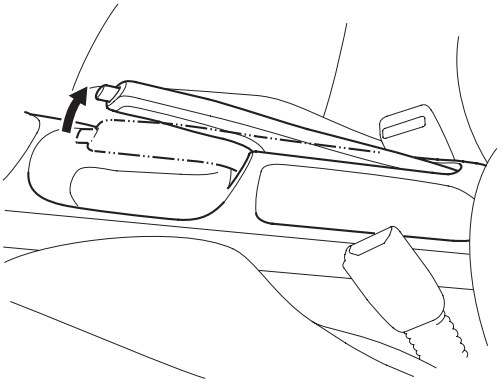

8. Tighten the adjusting nut (A) until the parking brakes drag slightly when the rear wheels are turned.

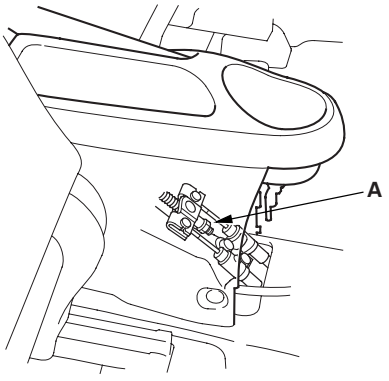

9. Release the parking brake lever fully, and check that the parking brakes do not drag when the rear wheels are turned. Readjust if necessary.

10. Make sure the parking brakes are fully applied when the parking brake lever is pulled up fully.

11. Reinstall the center console rear cover (see page 20-62).

Brake System Bleeding

NOTE:
- Do not reuse the drained fluid. Use only clean ACURA DOT 3 Brake Fluid from an unopened container. Using a non-Acura brake fluid can cause corrosion and shorten the life of the system.
- Do not mix different brands of brake fluid; they may not be compatible.
- Make sure no dirt or other foreign matter is allowed to contaminate the brake fluid.
- Do not spill brake fluid on the vehicle; it may damage the paint; if brake fluid does contact the paint, wash it off immediately with water.
- The reservoir on the master cylinder must be at the MAX (upper) level mark at the start of the bleeding procedure and checked after bleeding each brake caliper. Add fluid as required.

1. Make sure the brake fluid level in the reservoir is at the MAX (upper) level line (A).

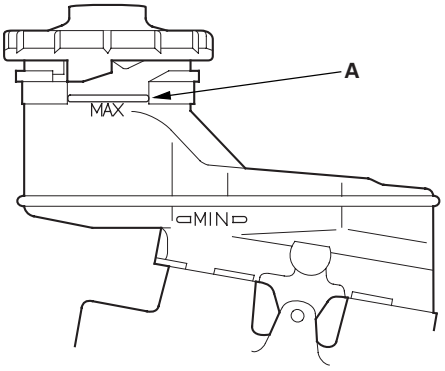

2. Slide a piece of clear plastic hose over the first bleed screw, and submerge the other end in a container of new brake fluid.

3. Have someone slowly pump the brake pedal several times, then apply steady pressure.

4. Starting at the left-front, loosen the brake bleed screw to allow air to escape from the system. Then tighten the bleed screw securely.

5. Repeat the procedure for each caliper until no air bubbles are in the fluid draining from the caliper. Bleed the caliper in the sequence shown.

BLEEDING SEQUENCE:

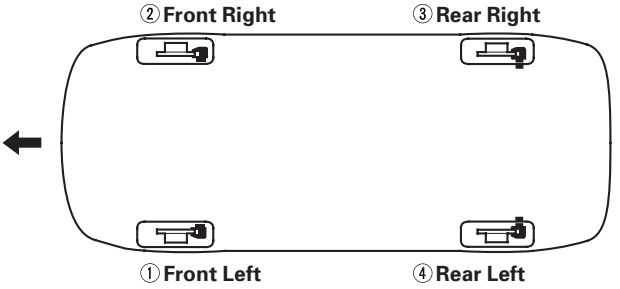

Front

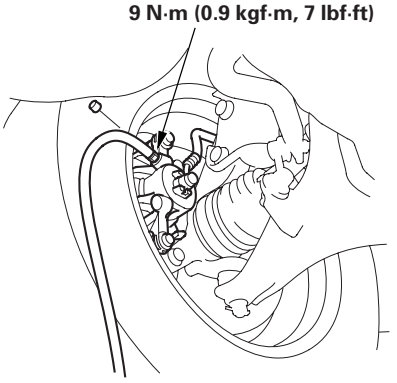

Rear

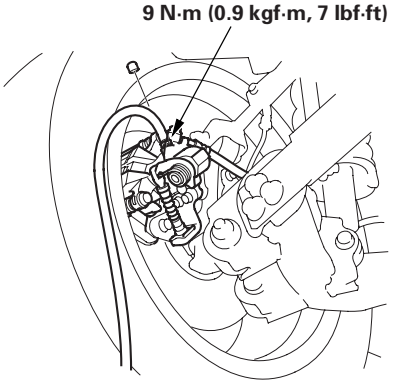

6. Refill the master cylinder reservoir to the MAX (upper) level line.

Brake System Indicator Circuit Diagram

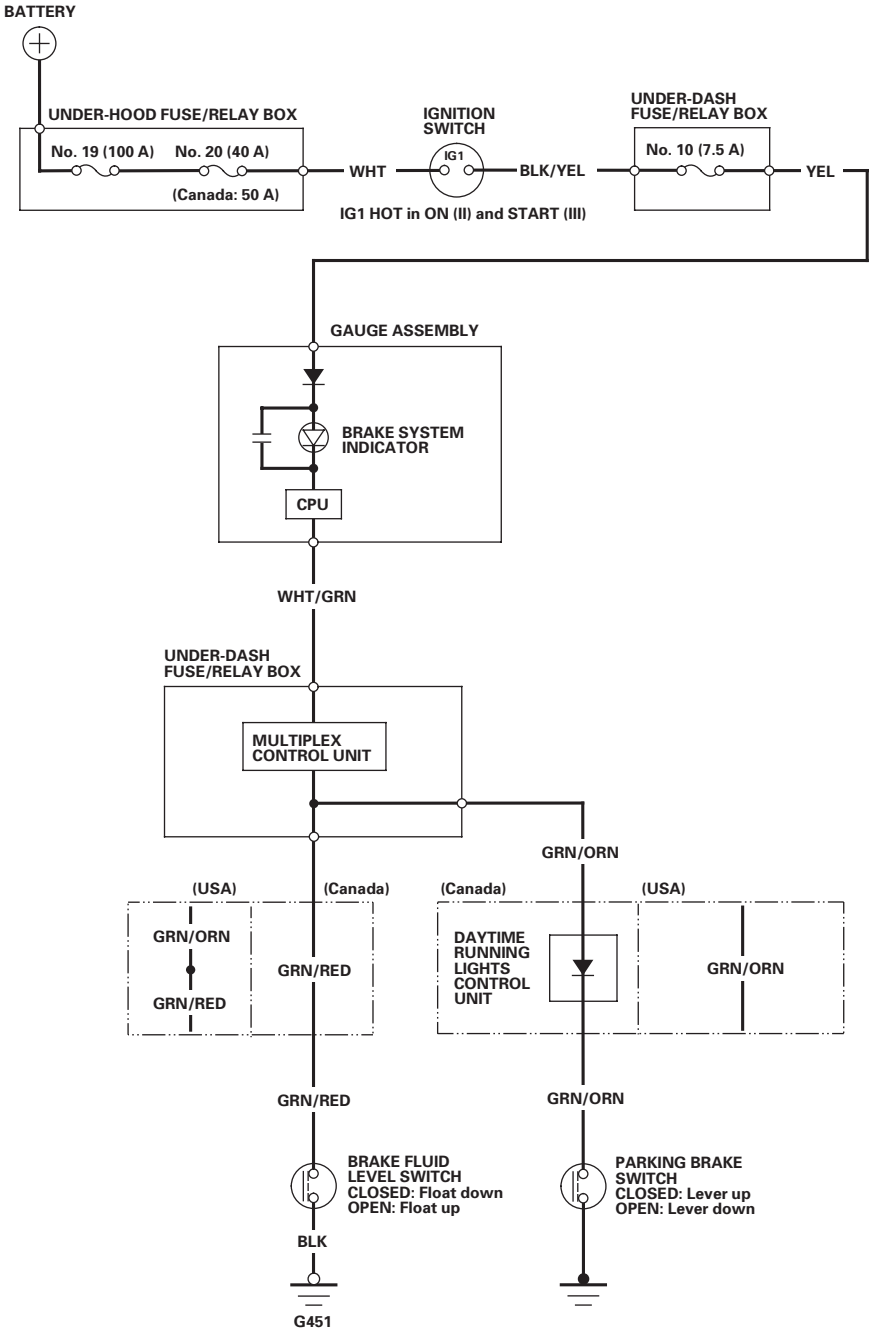

Parking Brake Switch Test

1. Remove the center console (see page 20-59).

2. Disconnect the connector (A) from the switch (B).

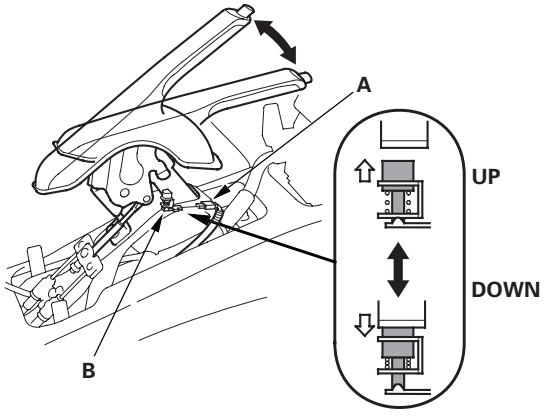

3. Check for continuity between the positive terminal and body ground.

   - With the brake lever up, there should be continuity.
   - With the brake lever down, there should be no continuity.

Brake Fluid Level Switch Test

Check for continuity between the terminals (A) with the float in the down position and the up position.

- Remove the brake fluid completely from the reservoir. With the float down, there should be continuity.
- Fill the reservoir with brake fluid to MAX (upper) level (B). With the float up, there should be no continuity.

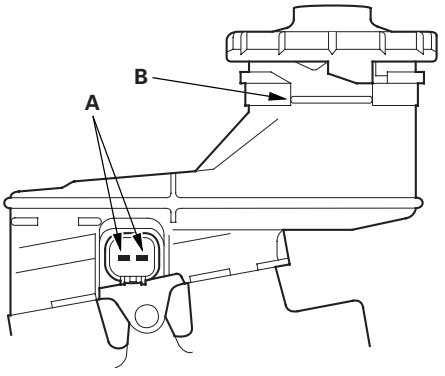

Front Brake Pad Inspection and Replacement

⚠CAUTION

Frequent inhalation of brake pad dust, regardless of material composition, could be hazardous to your health.
- Avoid breathing dust particles.
- Never use an air hose or brush to clean brake assemblies. Use an OSHA-approved vacuum cleaner.

Inspection

1. Raise the front of the vehicle, and support it with safety stands in the proper locations (see page 1-12).

2. Remove the front wheel.

3. Check the thickness of the inner pad (A) and outer pad (B). Do not include the thickness of the backing plate.

   Brake pad thickness:
   Standard: 9.5—10.5 mm (0.37—0.41 in.)
   Service limit: 1.6 mm (0.06 in.)

   Inner pad

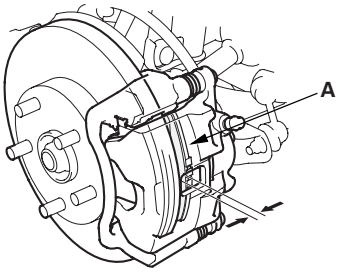

   Outer pad

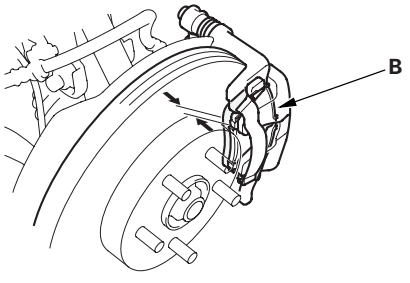

4. If the brake pad thickness is less than the service limit, replace all the brake pads as a set.

Replacement

1. Remove the flange bolt (A), and pivot the caliper (B) up out of the way. Check the hose and pin boots for damage and deterioration.

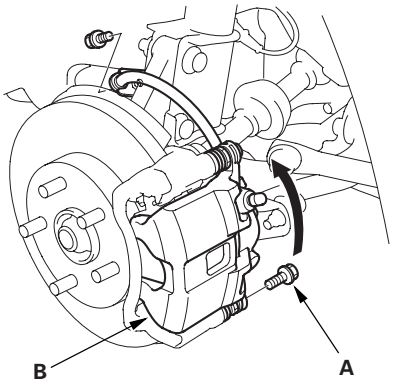

2. Remove the pad shims (A) and brake pads (B).

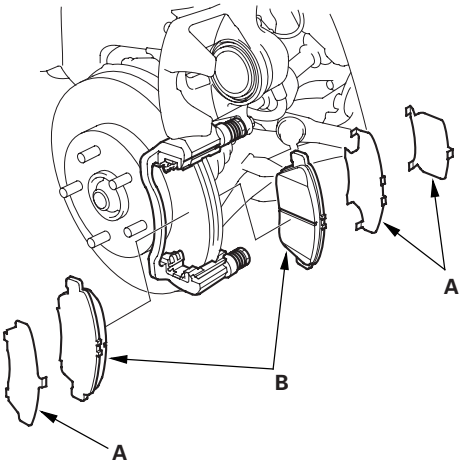

(cont'd)

Front Brake Pad Inspection and Replacement (cont'd)

3. Remove the pad retainers (A).

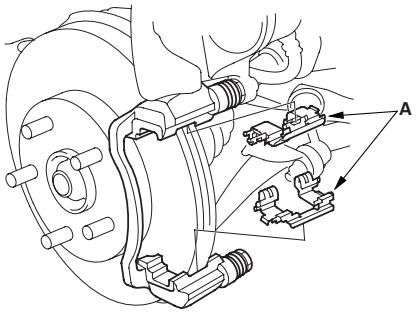

4. Clean the caliper thoroughly; remove any rust, and check for grooves and cracks.

5. Check the brake disc for damage and cracks.

6. Apply a thin coat of Molycote M-77 assembly paste (P/N 08798-9010) to the retainers on their mating surfaces against the caliper bracket.

7. Install the pad retainers. Wipe excess assembly paste off the retainers. Contaminated brake discs and pads reduce stopping ability. Keep assembly paste off the brake discs and pads.

8. Apply a thin coat of Molycote M-77 assembly paste to both sides of the pad shims (A), the back of the brake pads (B), and the other areas indicated by the arrows. Wipe excess assembly paste off the shim. Contaminated brake discs and pads reduce stopping ability. Keep assembly paste off the brake discs and pads.

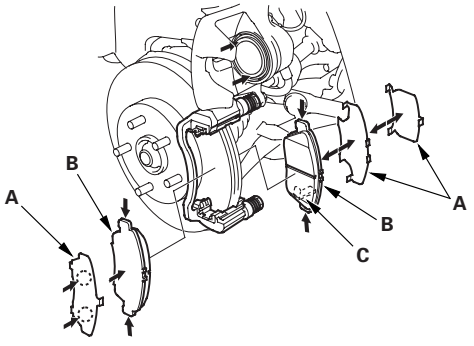

9. Install the brake pads and pad shim correctly. Install the brake pads with the wear indicator (C) on the lower inside.
   If you are reusing the brake pads, always reinstall the brake pads in their original positions to prevent a momentary loss of braking efficiency.

10. Push in the piston (A) so the caliper will fit over the brake pads. Make sure the piston boot is in position to prevent damaging it when pivoting the caliper down.

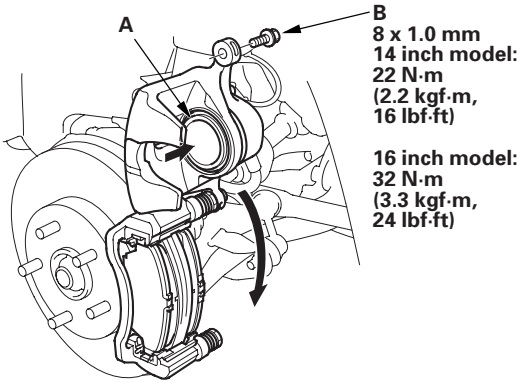

11. Pivot the caliper down into position. Be careful not to damage the pin boots, install the flange bolt (B), and tighten it to the specified torque.

12. Press the brake pedal several times to make sure the brake works.

    NOTE: Engagement of the brake may require a greater pedal stroke immediately after the brake pads have been replaced as a set. Several applications of the brake pedal will restore the normal pedal stroke.

13. After installation, check for leaks at hose and line joints or connections, and retighten if necessary. Test-drive the vehicle, then check for leaks.

Front Brake Disc Inspection

Runout

1. Raise the front of the vehicle, and support it with safety stands in the proper locations (see page 1-12).

2. Remove the front wheels.

3. Remove the brake pads (see page 19-11).

4. Inspect the brake disc surface for damage and cracks. Clean the brake disc thoroughly, and remove all rust.

5. Install suitable flat washers (A) and the wheel nuts (B), and tighten the wheel nuts to the specified torque to hold the brake disc securely against the hub.

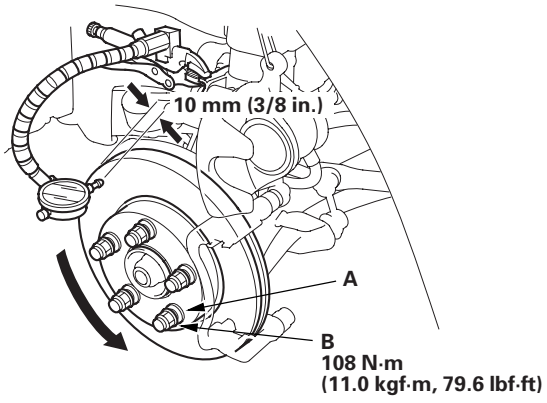

6. Set up the dial gauge against the brake disc as shown, and measure the runout at 10 mm (3/8 in.) from the outer edge of the brake disc.

   Brake disc runout:
   Service limit: 0.10 mm (0.004 in.)

7. If the brake disc is beyond the service limit, refinish the brake disc with an on-car brake lathe. The Kwik-Lathe produced by Kwik-way Manufacturing Co. and the ''Front Brake Disc Lathe'' offered by Snap-on Tools Co. are approved for this operation.

   Max. refinish limit:
   K20A2, K20Z1 engine models: 23.0 mm (0.91 in.)
   K20A3 engine model: 19.0 mm (0.75 in.)

   NOTE:
   - If the brake disc is beyond the service limit for refinishing, replace it (see page 18-11).
   - A new brake disc should be refinished if its runout is greater than 0.10 mm (0.004 in.).

Thickness and Parallelism

1. Raise the front of the vehicle, and support it with safety stands in the proper locations (see page 1-12).

2. Remove the front wheels.

3. Remove the brake pads (see page 19-11).

4. Using a micrometer, measure brake disc thickness at eight points, about 45 ° apart and 10 mm (3/8 in.) in from the outer edge of the brake disc. Replace the brake disc if the smallest measurement is less than the max. refinishing limit.

   Brake disc thickness:
   Standard:
   K20A2, K20Z1 engine models:
   24.9—25.1 mm (0.98—0.99 in.)
   K20A3 engine model:
   20.9—21.1 mm (0.82—0.83 in.)
   Max. refinishing limit:
   K20A2, K20Z1 engine models: 23.0 mm (0.91 in.)
   K20A3 engine model: 19.0 mm (0.75 in.)
   Brake disc parallelism: 0.015 mm (0.0006 in.) max.

   NOTE: Parallelism is the maximum allowable difference between the thickness measurements.

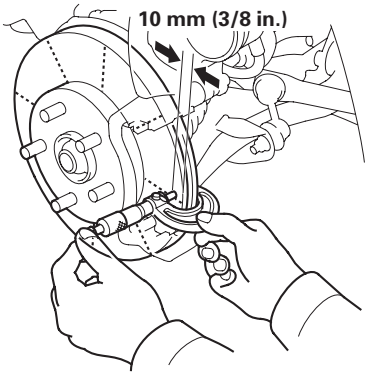

5. If the brake disc is beyond the service limit for parallelism, refinish the brake disc with an on-car brake lathe. The Kwik-Lathe produced by Kwik-way Manufacturing Co. and the ''Front Brake Disc Lathe'' offered by Snap-on Tools Co. are approved for this operation.

   NOTE: If the brake disc is beyond the service limit for refinishing, replace it (see page 18-11).

Front Brake Caliper Overhaul

⚠CAUTION

Frequent inhalation of brake pad dust, regardless of material composition, could be hazardous to your health.
- Avoid breathing dust particles.
- Never use an air hose or brush to clean brake assemblies. Use an OSHA-approved vacuum cleaner.

Remove, disassemble, inspect, reassemble, and install the caliper, and note these items:

NOTE: Make sure that the caliper pins are installed correctly. The upper and lower caliper pins are different. If the caliper pins are installed in the wrong location, it will cause uneven tire wear, vibration, and or uneven or rapid pad wear.

- Do not spill brake fluid on the vehicle; it may damage the paint; if brake fluid gets on the paint, wash it off immediately with water.
- To prevent dripping, cover disconnected hose joints with rags or shop towels.
- Clean all parts in brake fluid and air dry; blow out all passages with compressed air.
- Before reassembling, check that all parts are free of dust and other foreign particles.
- Replace parts with new ones as specified in the illustration.
- Make sure no dirt or other foreign matter is allowed to contaminate the brake fluid.
- Make sure no grease or oil gets on the brake discs or pads.
- When reusing pads, always reinstall them in their original positions to prevent loss of braking efficiency.
- Do not reuse drained brake fluid. Use only clean ACURA DOT 3 Brake Fluid from an unopened container. Using a non-Acura brake fluid can cause corrosion and shorten the life of the system.
- Do not mix different brands of brake fluid as they may not be compatible.
- Coat the piston, piston seal groove, and caliper bore with clean brake fluid.
- Replace all rubber parts with new ones whenever disassembled.
- After installing the caliper, check the brake hose and line for leaks, interference, and twisting.

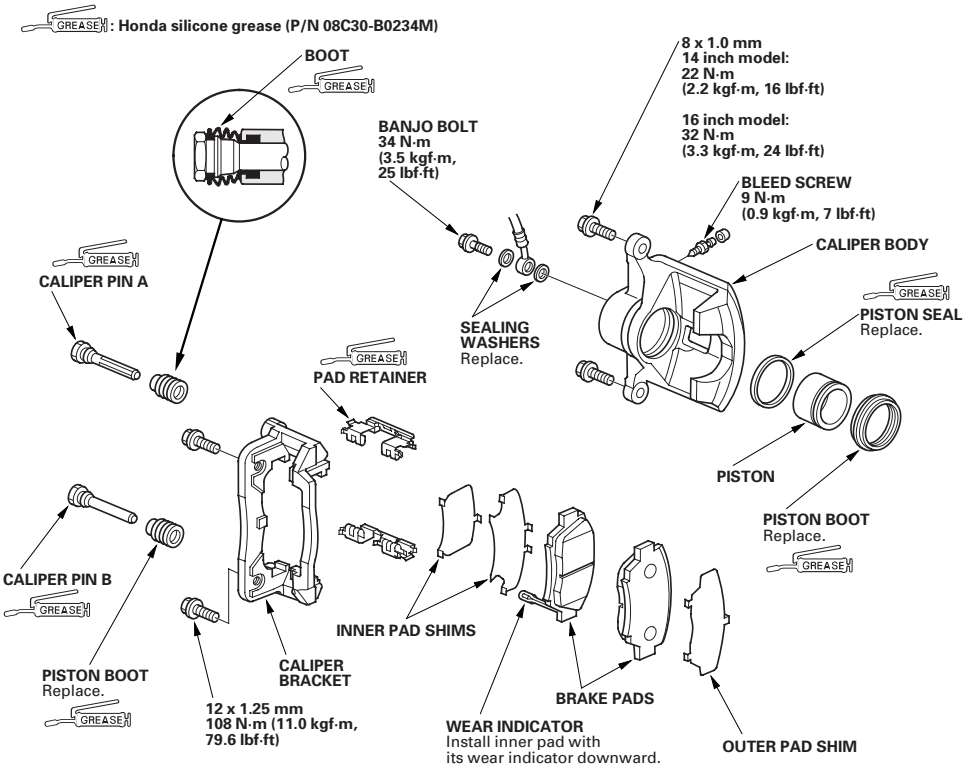

Master Cylinder Replacement

NOTE: Do not spill brake fluid on the vehicle; it may damage the paint; if brake fluid does contact the paint, wash it off immediately with water.

1. Remove the air cleaner.

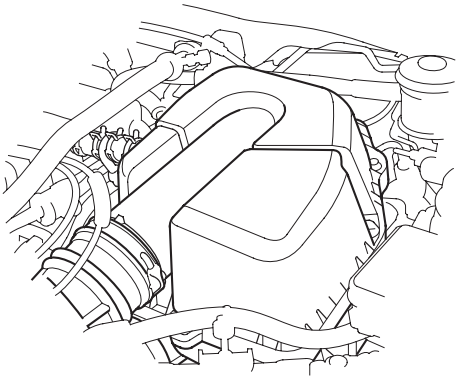

2. Remove the reservoir cap and brake fluid from the master cylinder reservoir.

3. Remove the brake fluid level sensor connector (A).

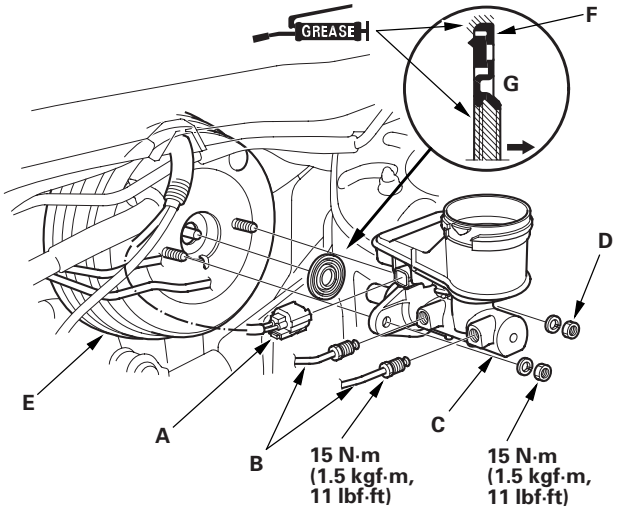

4. Disconnect the brake lines (B) from the master cylinder (C). To prevent spills, cover the hose joints with rags or shop towels.

5. Remove the master cylinder mounting nuts (D) and washers.

6. Remove the master cylinder from the brake booster (E). Be careful not to bend or damage the brake lines when removing the master cylinder.

7. Remove the rod seal (F) from the master cylinder.

8. Install the master cylinder in the reverse order of removal, and note these items:

   - Replace all the rubber parts with new ones whenever the master cylinder is removed.
   - Check the pushrod clearance before installing the master cylinder, and adjust it if necessary (see page 19-16).
   - Use a new rod seal on reassembly.
   - Coat the inner bore lip and outer circumference of the new rod seal with the recommended seal grease in the master cylinder set.
   - Install the rod seal onto the master cylinder with its grooved side (G) toward the master cylinder.
   - Check the brake pedal height and free play after installing the master cylinder, and adjust it if necessary (see page 19-6).
   - Bleed the brake system (see page 19-8).

9. Spin the wheels to check for brake drag.

Master Cylinder Inspection

NOTE:
- Before reassembling, check that all parts are free of dust and other foreign particles.
- Do not try to disassemble the master cylinder assembly. Replace the master cylinder assembly with a new part if necessary.
- Do not allow dirt or foreign matter to contaminate the brake fluid.
- Bleed the brake system (see page 19-8).

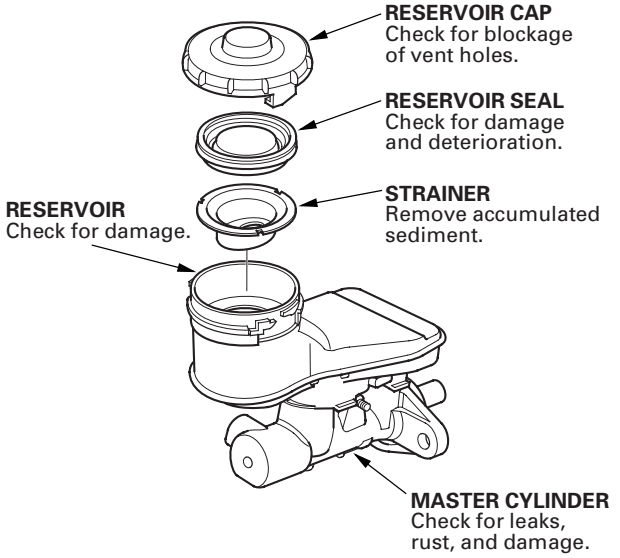

Brake Booster Pushrod Clearance Adjustment

Special Tools Required
Pushrod adjustment gauge 07JAG-SD40100

NOTE: Brake booster pushrod-to-piston clearance must be checked and adjustments made, if necessary, before installing the master cylinder.

1. Set the special tool (A) on the master cylinder body (B), push in the center shaft (C) until the top of it contacts the end of the secondary piston (D) by turning the adjusting nut (E).

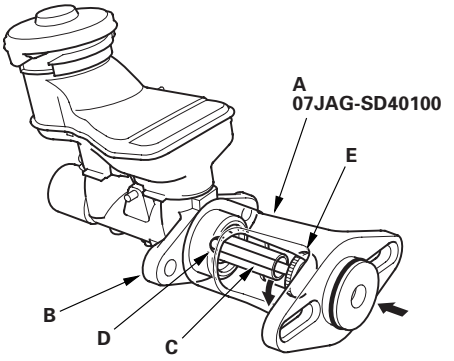

2. Without disturbing the center shaft's position, install the special tool (A) backwards on the booster.

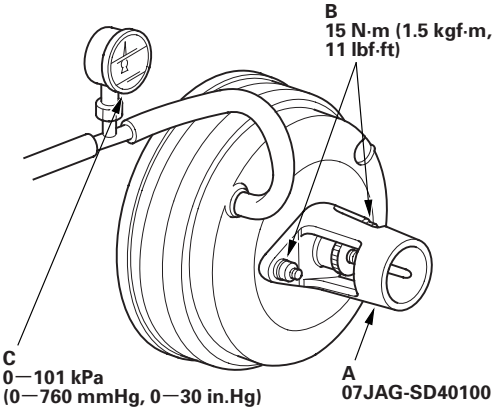

3. Install the master cylinder nuts (B), and tighten them to the specified torque.

4. Connect the booster in-line with a vacuum gauge (C) 0—101 kPa (0—760 mmHg, 0—30 in.Hg) to the booster's engine vacuum supply, and maintain an engine speed that will deliver 66 kPa (500 mmHg, 20 in.Hg) vacuum.

5. With a feeler gauge (A), measure the clearance between the gauge body and the adjusting nut (B) as shown.
   If the clearance between the gauge body and the adjusting nut is 0.4 mm (0.02 in.), the pushrod-to-piston clearance is 0 mm. However, if the clearance between the gauge body and the adjusting nut is 0 mm, the pushrod-to-piston clearance is 0.4 mm (0.02 in.) or more. Therefore, it must be adjusted and rechecked.

   Clearance: 0—0.4 mm (0—0.02 in.)

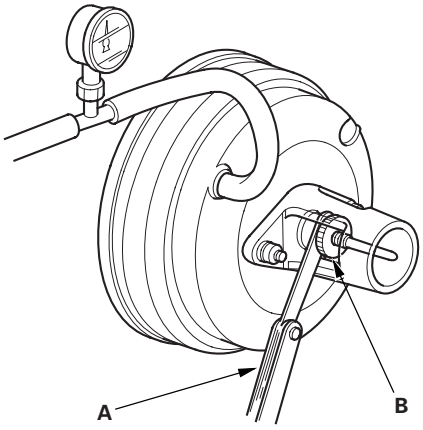

6. If the clearance is incorrect, loosen the star locknut (A), and turn the adjuster (B) in or out to adjust.

   - Adjust the clearance while the specified vacuum is applied to the booster.
   - Hold the yoke (C) while adjusting.

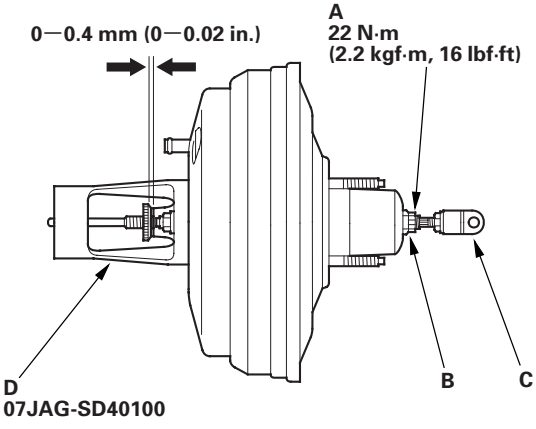

7. Tighten the star locknut securely.

8. Remove the special tool (D).

9. Check the pushrod length (A) as shown if the booster is removed. If the length is incorrect, loosen the pushrod locknut (B), and turn the yoke (C) in or out to adjust.

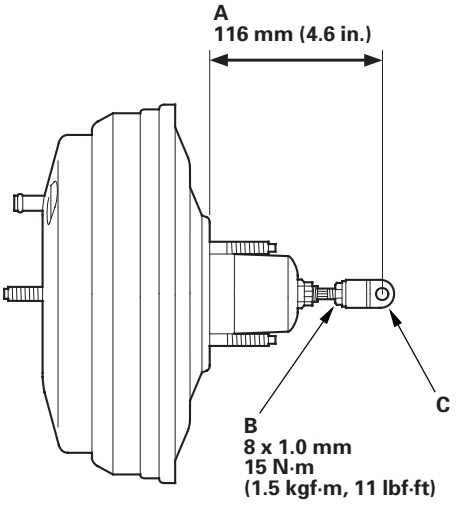

10. Install the master cylinder (see page 19-15).

Brake Booster Test

Functional Test

1. With the engine stopped, press the brake pedal several times to deplete the vacuum reservoir, then press the brake pedal hard, and hold it for 15 seconds. If the brake pedal sinks, either the master cylinder is bypassing internally, or the brake system (master cylinder, lines, modulator-control unit, proportioning control valve, or calipers) is leaking.

2. Start the engine with the brake pedal pressed. If the brake pedal sinks slightly, the vacuum booster is operating normally. If the brake pedal height does not vary, the booster or check valve is faulty.

3. With the engine running, press the brake pedal lightly, and shift the transmission to the D position. Apply just enough pressure to hold back automatic transmission creep. If the brake pedal sinks more than 10 mm (3/8 in.) in 3 minutes, the master cylinder is faulty. A slight change in brake pedal height when the A/C compressor cycles on and off is normal. (The A/C compressor load changes the vacuum available to the booster.)

Leak Test

1. Press the brake pedal with the engine running, then stop the engine. If the brake pedal height does not vary while pressed for 30 seconds, the vacuum booster is OK. If the pedal height rises go to step 6. If it does not rise go to step 2.

2. Turn the engine off, and wait 30 seconds. Press the brake pedal several times using normal pressure. When the brake pedal is first pressed, it should be low. On consecutive applications, the brake pedal height should gradually rise. Does the pedal rise on each consecutive application? If it rises the booster is OK. If it does not go to step 3.

3. Disconnect the brake booster vacuum hose (check valve built-in) (A) at the booster (B) side.

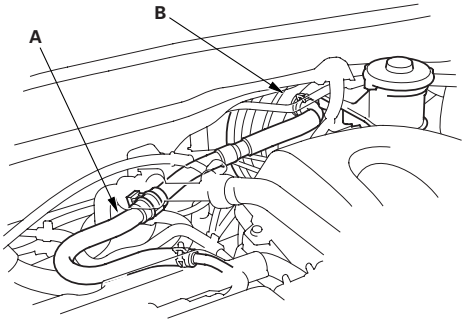

4. Start the engine, and let it idle. There should be vacuum available. If no vacuum is available, the check valve is not working properly. Replace the brake booster vacuum hose and check valve, and retest. If vacuum is found, go to step 5.

5. Reconnect the brake booster vacuum hose to the booster.

6. Start the engine, and then pinch the brake booster vacuum hose between the check valve and the booster.

7. Turn the engine off, and wait 30 seconds. Press the brake pedal several times using normal pressure. When the brake pedal is first pressed, it should be low. On consecutive applications, the brake pedal height should gradually rise.

   - If the pedal position varies, replace the brake booster vacuum hose/check valve assembly.
   - If the pedal position does not vary, replace the brake booster.

Brake Booster Replacement

1. Remove the master cylinder (see page 19-15).

2. Disconnect the vacuum hose (A) from the brake booster.

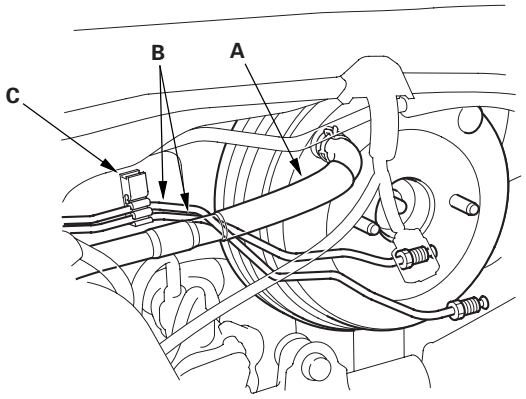

3. Remove the master cylinder brake lines (B) from the brake line holder (C).

4. Remove the lock pin (A) and the joint pin (B), then disconnect the yoke from the brake pedal.

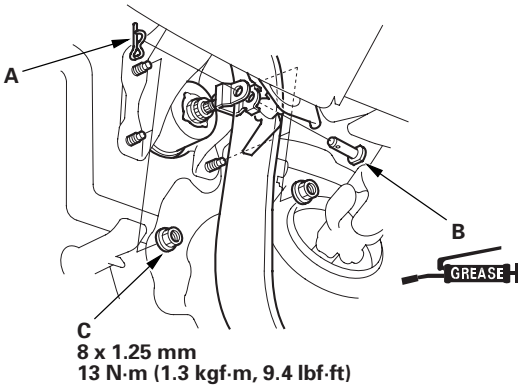

5. Remove the brake booster mounting flange nuts (C).

6. Remove the brake booster (A) from the engine compartment.

NOTICE

- Be careful not to damage the booster surfaces and threads of the booster stud bolts.
- Be careful not to bend or damage the brake lines.

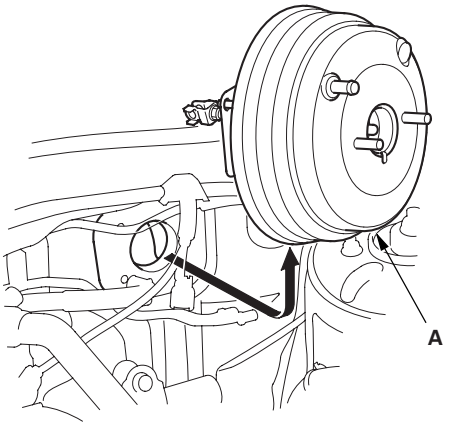

7. Install the brake booster in the reverse order of removal, and note these items:

   - Adjust the pushrod clearance before installing the brake booster (see page 19-16).
   - Use a new lock pin whenever installing.
   - After installing the brake booster and master cylinder, fill the reservoir with new brake fluid, bleed the brake system (see page 19-8), and adjust the brake pedal height and free play (see page 19-6).

Rear Brake Pad Inspection and Replacement

⚠CAUTION

Frequent inhalation of brake pad dust, regardless of material composition, could be hazardous to your health.
- Avoid breathing dust particles.
- Never use an air hose or brush to clean brake assemblies. Use an OSHA-approved vacuum cleaner.

Inspection

1. Raise the rear of the vehicle, and support it with safety stands in the proper locations (see page 1-12).

2. Remove the rear wheels.

3. Check the thickness of the inner pad (A) and outer pad (B). Do not include the thickness of the backing plate.

   Brake pad thickness:
   Standard: 8.5—9.5 mm (0.33—0.37 in.)
   Service limit: 1.6 mm (0.06 in.)

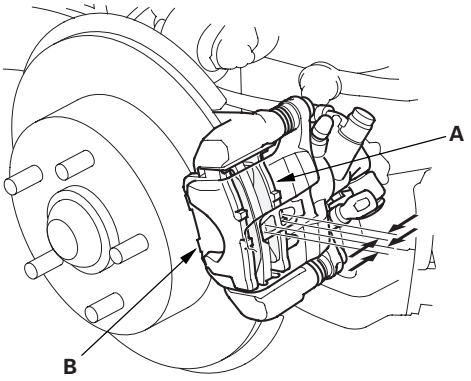

4. If the brake pad thickness is less than the service limit, replace all the pads as a set.

Replacement

1. Remove the bolt (A) and brake hose (B) from the mounting bracket.

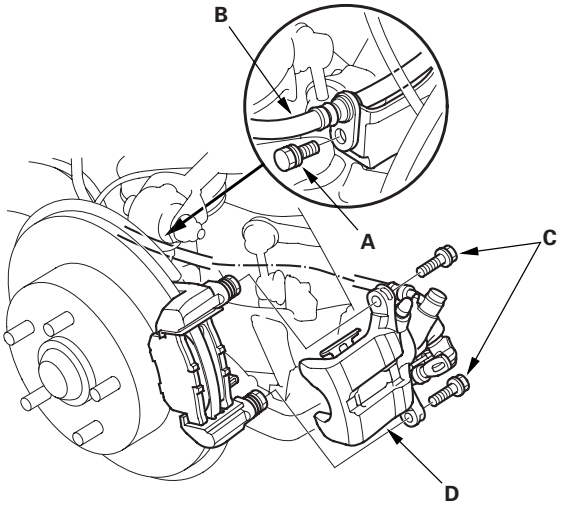

2. Remove the caliper bolts (C), and remove the caliper (D) from the caliper bracket.

3. Remove the pad shims (A) and pads (B).

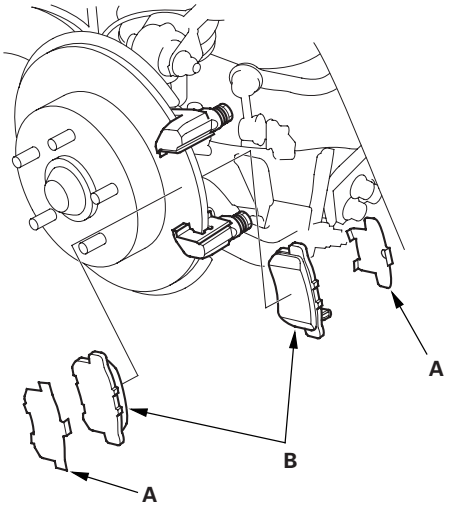

4. Remove the pad retainers (A).

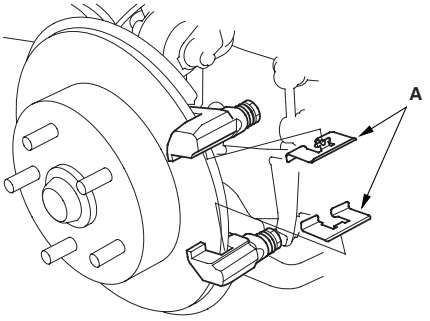

5. Clean the caliper thoroughly; remove any rust, and check for grooves and cracks.

6. Check the brake disc for damage and cracks.

7. Apply a thin coat of Molycote M-77 assembly paste (P/N 08798-9010) to the retainers on their mating surfaces against the caliper bracket.

8. Install the pad retainers. Wipe excess assembly paste off the retainers. Contaminated brake discs and pads reduce stopping ability. Keep assembly paste off the discs and pads.

9. Apply a thin coat of Molycote M-77 assembly paste to both sides of the pad shims (A), the back of the brake pads (B), and the other areas indicated by the arrows. Wipe excess assembly paste off the shim. Contaminated brake discs and pads reduce stopping ability. Keep assembly paste off the brake discs and pads.

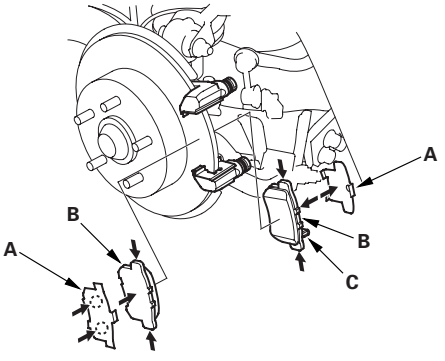

10. Install the brake pads and pad shims correctly. Install the brake pads with the wear indicator (C) on the lower inside.
    If you are reusing the brake pads, always reinstall the brake pads in their original positions to prevent a momentary loss of braking efficiency.

11. Rotate the caliper piston clockwise into the cylinder, then align the cutout (A) in the piston with the tab (B) on the inner pad by turning the piston back so the caliper can be installed on the brake pad. Lubricate the boot with rubber grease to avoid twisting the piston boot. If the piston boot is twisted, back it out so it is positioned properly.

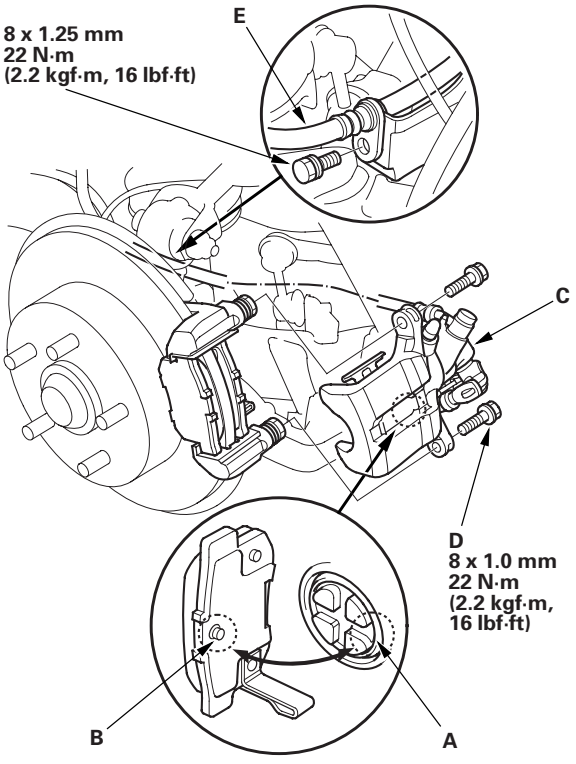

12. Install the brake caliper (C) and caliper bolts (D), and tighten the bolts to the specified torque.

13. Install the brake hose (E).

14. Press the brake pedal several times to make sure the brake works, then test-drive the vehicle.

    NOTE: Engagement of the brake may require a greater pedal stroke immediately after the brake pads have been replaced as a set. Several applications of the brake pedal will restore the normal pedal stroke.

15. After installation, check for leaks at hose and line joints or connections, and retighten if necessary.

Rear Brake Disc Inspection

Runout

1. Raise the rear of the vehicle, and support it with safety stands in the proper locations (see page 1-12).

2. Remove the rear wheels.

3. Remove the brake pads (see page 19-20).

4. Inspect the brake disc surface for damage and cracks. Clean the brake disc thoroughly, and remove all rust.

5. Install suitable flat washers (A) and the wheel nuts (B), and tighten the wheel nuts to the specified torque to hold the brake disc securely against the hub.

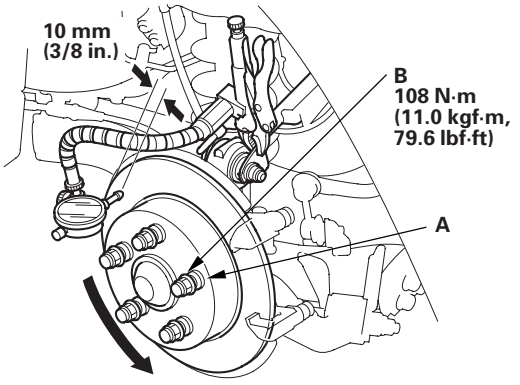

6. Set up the dial gauge against the brake disc as shown, and measure the runout at 10 mm (3/8 in.) from the outer edge of the brake disc.

   Brake disc runout:
   Service limit: 0.10 mm (0.004 in.)

7. If the brake disc is beyond the service limit, refinish the brake disc with an on-car brake lathe. The Kwik-Lathe produced by Kwik-way Manufacturing Co. and the ''Front Brake Disc Lathe'' offered by Snap-on Tools Co. are approved for this operation.

   Max. refinish limit: 8.0 mm (0.31 in.)

   NOTE:
   - If the brake disc is beyond the service limit for refinishing, replace it (see page 18-24).
   - A new disc should be refinished if its runout is greater than 0.10 mm (0.004 in.).

Thickness and Parallelism

1. Raise the rear of the vehicle, and support it with safety stands in the proper locations (see page 1-12).

2. Remove the rear wheels.

3. Remove the brake pads (see page 19-20).

4. Using a micrometer, measure brake disc thickness at eight points, about 45 ° apart and 10 mm (3/8 in.) in from the outer edge of the brake disc. Replace the brake disc if the smallest measurement is less than the max. refinishing limit.

   Brake disc thickness:
   Standard: 8.9—9.1 mm (0.350—0.358 in.)
   Max. refinishing limit: 8.0 mm (0.31 in.)
   Brake disc parallelism: 0.015 mm (0.0006 in.) max.

   NOTE: Parallelism is the maximum allowable difference between the thickness measurements.

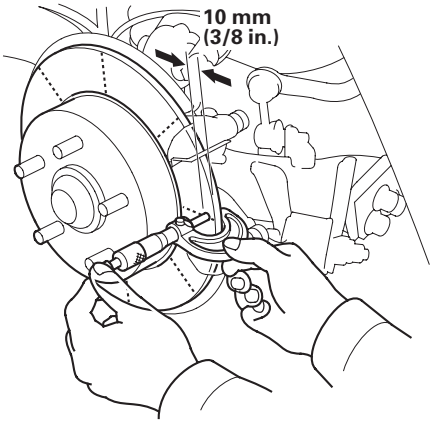

5. If the brake disc is beyond the service limit for parallelism, refinish the brake disc with an on-car brake lathe. The Kwik-Lathe produced by Kwik-way Manufacturing Co. and the ''Front Brake Disc Lathe'' offered by Snap-on Tools Co. are approved for this operation.

   NOTE: If the brake disc is beyond the service limit for refinishing, replace it (see page 18-24).

Rear Brake Caliper Overhaul

⚠CAUTION

Frequent inhalation of brake pad dust, regardless of material composition, could be hazardous to your health.
- Avoid breathing dust particles.
- Never use an air hose or brush to clean brake assemblies. Use an OSHA-approved vacuum cleaner.

Remove, disassemble, inspect, reassemble, and install the caliper, and note these items:

- Do not spill brake fluid on the vehicle; it may damage the paint; if brake fluid gets on the paint, wash it off immediately with water.
- To prevent dripping brake fluid, cover disconnected hose joints with rags or shop towels.
- Clean all parts in brake fluid and air dry; blow out all passages with compressed air.
- Before reassembling, check that all parts are free of dust and other foreign particles.
- Replace parts with new ones as specified in the illustration.
- Make sure no dirt or other foreign matter gets into the brake fluid.
- Make sure no grease or oil gets on the brake discs or pads.
- When reusing pads, always reinstall them in their original positions to prevent loss of braking efficiency.
- Do not reuse drained brake fluid. Use only clean ACURA DOT 3 Brake Fluid from an unopened container. Using a non-Acura brake fluid can cause corrosion and shorten the life of the system.
- Do not mix different brands of brake fluid as they may not be compatible.
- Coat the piston, piston seal groove, and caliper bore with clean brake fluid.
- Replace all rubber parts with new ones whenever disassembled.
- After installing the caliper, check the brake hose and line for leaks, interference, and twisting.

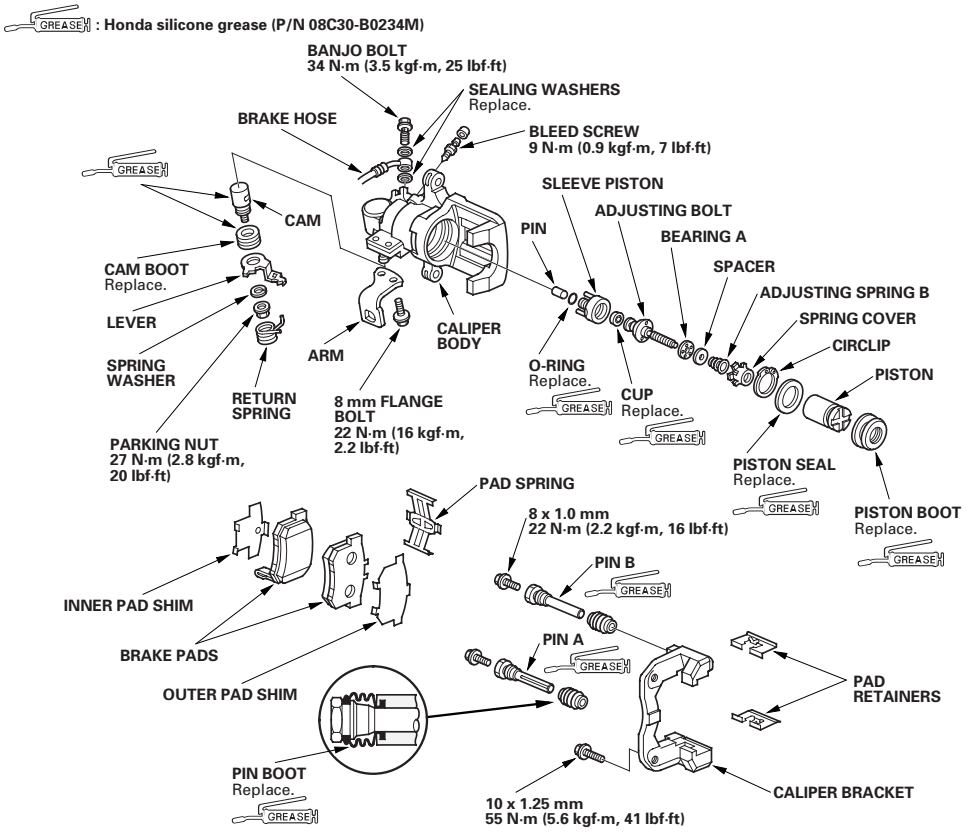

Brake Hose and Line Inspection

1. Inspect the brake hoses, for damage, deterioration, leaks, interference, and twisting.
2. Check the brake lines for damage, rusting, and leakage. Also check for bent brake lines.
3. Check for leaks at hose and line joints or connections, and retighten if necessary.
4. Check the master cylinder and ABS modulator-control unit (if equipped) for damage and leakage.

NOTE: Replace the brake hose clip whenever the brake hose is serviced.

Connection point	Component	Connected to	Specified Torque Value	Note
A	Front brake caliper	Brake hose	34 N·m (3.5 kgf·m, 25 lbf·ft)	Banjo bolt
		Breed screw	9 N·m (0.9 kgf·m, 7 lbf·ft)	
B	Rear brake caliper	Brake hose	34 N·m (3.5 kgf·m, 25 lbf·ft)	Banjo bolt
		Breed screw	9 N·m (0.9 kgf·m, 7 lbf·ft)	
C	Brake hose	Brake line	15 N·m (1.5 kgf·m, 11 lbf·ft)	Flare nut
D	Master cylinder	Brake line	15 N·m (1.5 kgf·m, 11 lbf·ft)	Flare nut
E	ABS modulator-control unit	Brake line	15 N·m (1.5 kgf·m, 11 lbf·ft)	Flare nut
F	Proportioning control valve	Brake line	15 N·m (1.5 kgf·m, 11 lbf·ft)	Flare nut

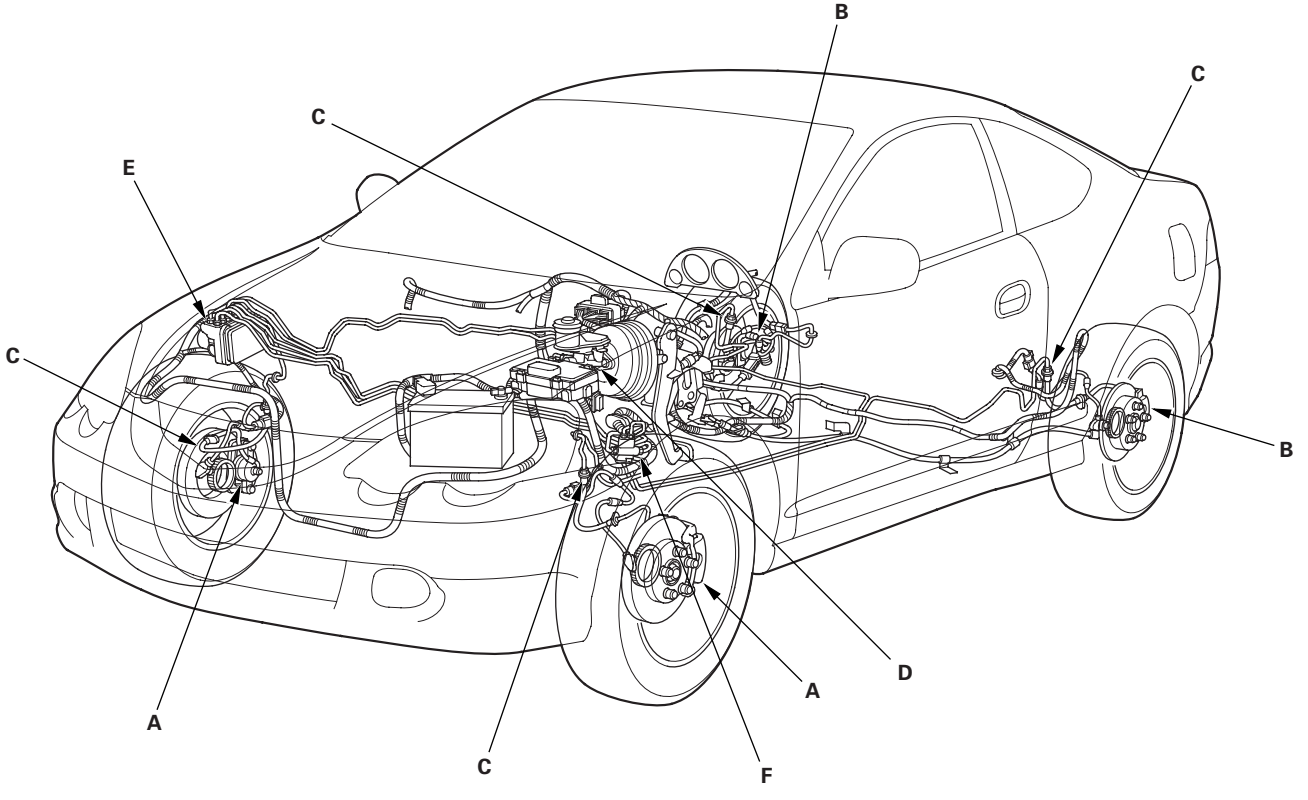

Brake Hose Replacement

NOTE:
- Before reassembling, check that all parts are free of dust and other foreign particles.
- Replace parts with new ones whenever specified to do so.
- Do not spill brake fluid on the vehicle; it may damage the paint; if brake fluid gets on the paint, wash it off immediately with water.
- To prevent dripping, cover disconnected line joints with rags or shop towels.

1. Replace the brake hose (A) if the hose is twisted, cracked, or if it leaks.

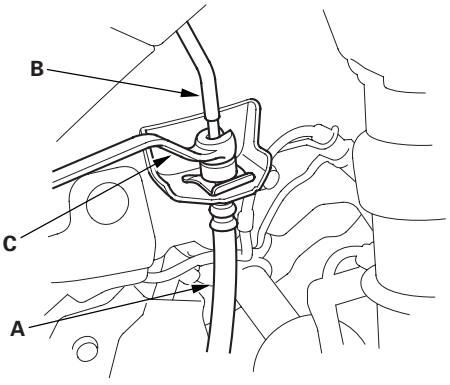

2. Disconnect the brake hose from the brake line (B) using a 10 mm flare nut wrench (C).

3. Remove the flange bolt (A), and remove the brake hose brackets from the damper.

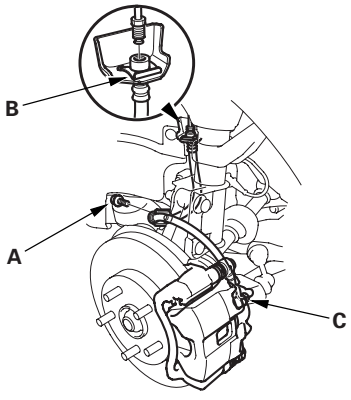

4. Remove and discard the hose clip (B).

5. Remove the banjo bolt (C), and remove the brake hose from the caliper.

6. Install the brake hose bracket (A) on the damper with the flange bolt (B) first, then connect the brake hose to the caliper with the banjo bolt (C) and new sealing washers (D).

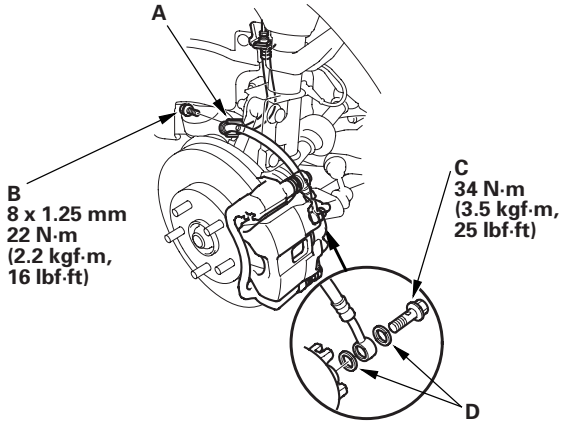

7. Install the brake hose onto the hose bracket with a new hose clip (A).

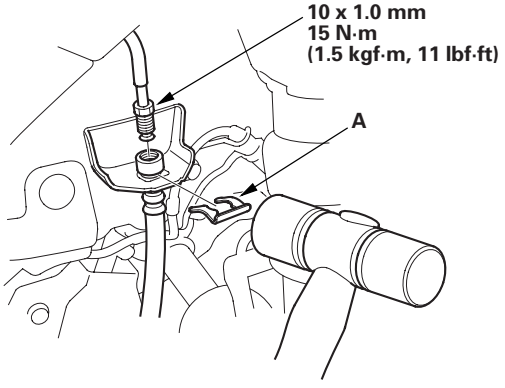

8. Connect the brake line to the brake hose.

9. After installing the brake hose, bleed the brake system (see page 19-8).

10. Do the following checks:

    - Check the brake hose and line joint for leaks, and tighten if necessary.
    - Check the brake hoses for interference and twisting.

Parking Brake Cable Replacement

Exploded View

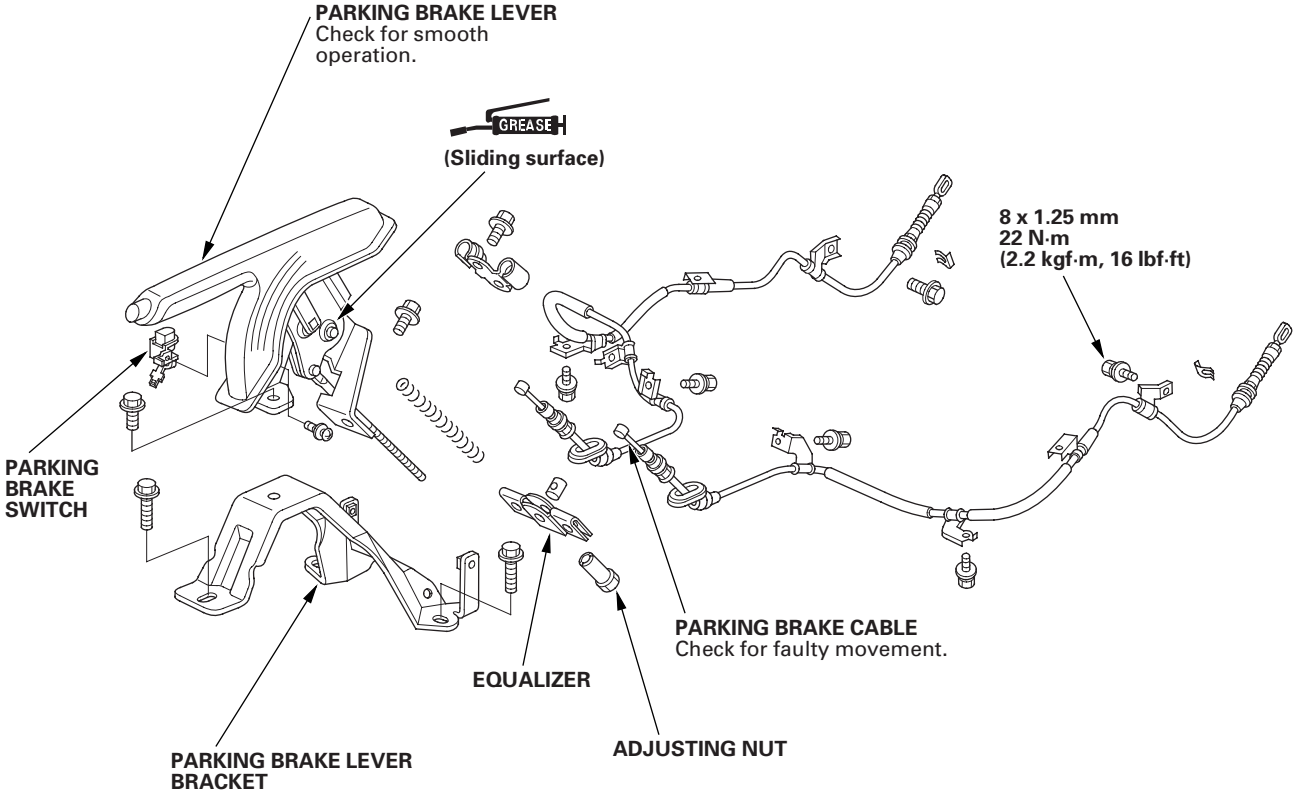

NOTE:
- The parking brake cables must not be bent or distorted. This will lead to stiff operation and premature failure.
- Refer to the Exploded View as needed during this procedure.

1. Release the parking brake lever fully.

2. Remove the center console rear cover (see page 20-62).

3. Loosen the parking brake cable adjusting nut (A).

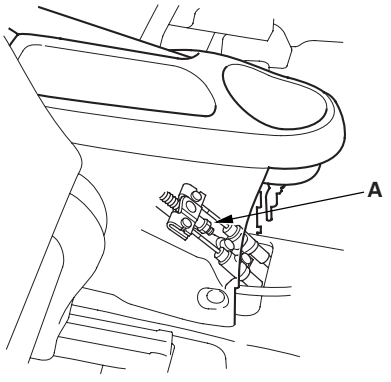

4. Remove the parking brake cable clip (A) from the brake cable (B).

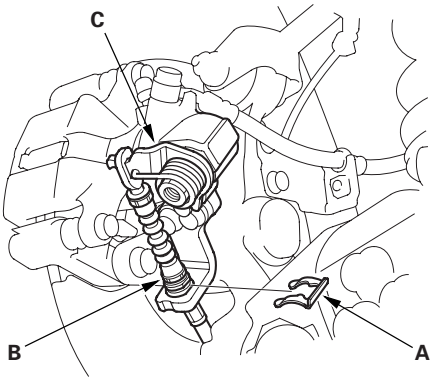

5. Disconnect the parking brake cable from the lever (C).

6. Remove the parking brake cable mounting hardware, then remove the cable.

7. Install the new cable in the reverse order of removal, and note these items:

   - Be careful not to bend or distort the cable.
   - Make sure the parking brake cable clip is fully seated on the cable housing.
   - Do the parking brake adjustment (see page 19-7).

Brakes

Conventional Brake Components 19-1

ABS (Anti-lock Brake System) Components
Component Location Index 19-30
General Troubleshooting Information 19-31
DTC Troubleshooting Index 19-35
Symptom Troubleshooting Index 19-36
System Description 19-37
Circuit Diagram 19-44
DTC Troubleshooting 19-47
Symptom Troubleshooting 19-55
ABS Modulator-Control Unit
Removal and Installation 19-59
Wheel Sensor Inspection 19-60
Wheel Sensor Replacement 19-60

Component Location Index

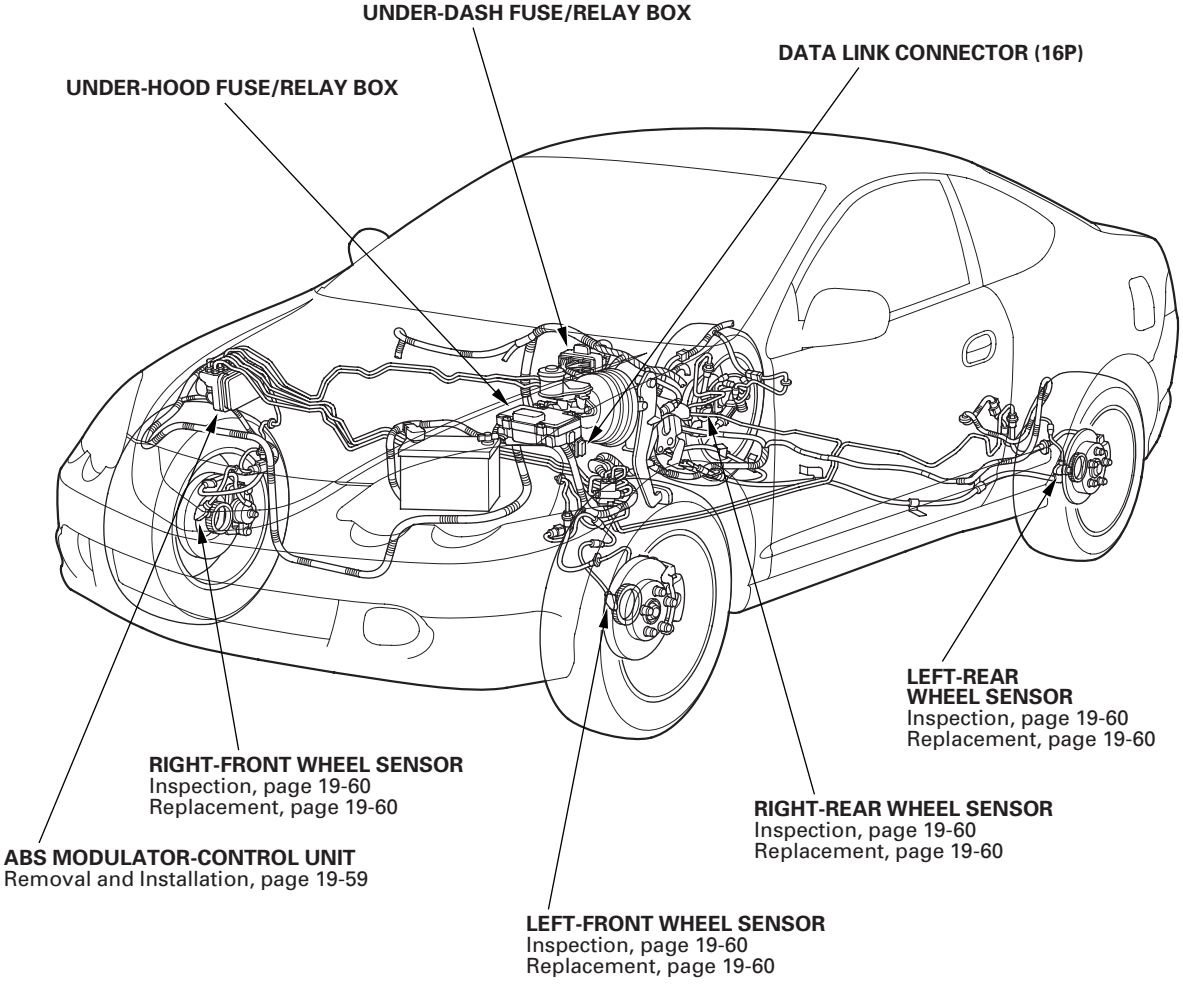

General Troubleshooting Information

ABS Indicator

- If the system is OK, the ABS indicator goes off 2 seconds after turning the ignition switch ON (II) without starting the engine, and then comes on again and goes off 2 seconds later after starting the engine. This occurs because the ABS modulator-control unit is turned on by the IG2 power source.
- The ABS indicator comes on when the ABS modulator-control unit detects a problem in the system. However, even though the system is operating properly, the indicator will come on under these conditions:
  – Only the drive wheels rotate
  – One drive wheel is stuck
  – The vehicle goes into a spin
  – The ABS continues to operate for a long time
  – The vehicle is subjected to an electrical signal disturbance

To determine the actual cause of the problem, question the customer about the problem, taking these conditions into consideration.

- When a problem is detected and the ABS indicator comes on, there are cases when the indicator stays on until the ignition switch is turned OFF, and cases when the indicator goes off automatically when the system returns to normal.
  – DTC 61 or 62:
    The ABS indicator goes off automatically when the system returns to normal.
  – DTC 11, 13, 15, 17, 31, 32, 33, 34, 35, 36, 37, 38, 54, 71, or 81:
    The ABS indicator stays on until the ignition switch is turned OFF whether or not the system returns to normal.
  – DTC 12, 14, 16, 18, 21, 22, 23, 24, 41, 42, 43, 44, 51, 52, or 53:
    The ABS indicator goes off after the ignition switch is turned OFF and then back ON (II), the vehicle is driven, and the system is OK.

Brake System Indicator

The brake indicator in the gauge assembly will come on under these conditions:

- Parking brake lever is pulled up
- Low brake fluid in the brake master cylinder reservoir

Diagnostic Trouble Code (DTC)

- The memory can hold any number of DTCs. However, when the same DTC is detected more than once, the more recent DTC is written over the earlier one. Therefore, when the same problem is detected repeatedly, it is memorized as a single DTC.
- The DTCs are indicated in ascending number order, not in the order that they occur.
- The DTCs are memorized in the EEPROM (non-volatile memory). Therefore, the memorized DTCs are not cleared when the battery is disconnected, the ignition switch is turned off, or the system returns to normal. Do the specified procedures to clear the DTCs.

Self-diagnosis

- Self-diagnosis can be classified into two categories:
  – Initial diagnosis:
    Done right after the ignition switch is turned ON (II) and until the ABS indicator goes off
  – Regular diagnosis:
    Done right after the initial diagnosis until the ignition switch is turned OFF
- When a problem is detected by self-diagnosis, the system does the following:
  – Turns the ABS indicator on
  – Memorizes the DTC
  – Stops ABS operation

Kickback

The pump motor operates when the ABS is functioning, and the fluid in the reservoir is forced out to the master cylinder, causing kickback at the brake pedal.

Pump Motor

- The pump motor operates when the ABS is functioning.
- The ABS control unit checks the pump motor operation when the vehicle is driven the first time after the ignition switch is turned ON (II). You may hear the motor operate at this time, but it is normal.

(cont'd)

General Troubleshooting Information (cont'd)

How to Troubleshoot DTCs

The troubleshooting flowchart procedures assume that the cause of the problem is still present and the ABS indicator is still on. Following the flowchart when the ABS indicator does not come on can result in incorrect diagnosis.
The connector illustrations show the female terminal connectors with a single outline and the male terminal connectors with a double outline.

1. Question the customer about the conditions when the problem occurred, and try to reproduce the same conditions for troubleshooting. Find out when the ABS indicator came on, such as during ABS control, after ABS control, when the vehicle was at a certain speed, etc.

2. When the ABS indicator does not come on during the test-drive, but troubleshooting is done based on the DTC, check for loose connectors, poor terminal contact, etc. before you start troubleshooting.

3. After troubleshooting, or repairs are done, clear the DTCs, and test-drive the vehicle under the same conditions as originally set with the DTCs. Make sure the ABS indicator does not come on.

How to Retrieve DTCs

HDS Method

1. With the ignition switch OFF, connect the HDS to the 16P data link connector (DLC) (A) under the driver's side of the dashboard next to the accelerator pedal.

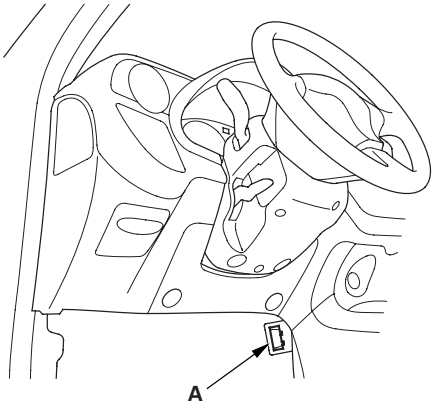

2. Turn the ignition switch ON (II), and follow the prompts on the HDS to display the DTC(s) on the screen. After determining the DTC, refer to the DTC Troubleshooting.

   NOTE: See the HDS Help menu for specific instructions.

Service Check Signal (SCS) Circuit Method

1. With the ignition switch OFF, connect the HDS to the 16P data link connector (DLC) (A) under the driver's side of the dashboard next to the accelerator pedal.

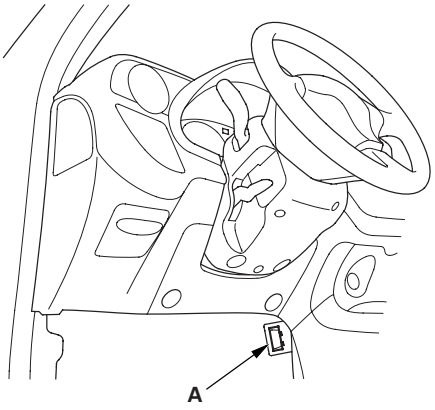

2. Short the SCS circuit to body ground using the HDS.

3. Turn the ignition switch ON (II) without the brake pedal pressed.

   NOTE: If the brake pedal is pressed when turning the ignition switch ON (II), the system shifts to the DTC clearing mode.

4. The blinking frequency indicates the DTC. DTCs are indicated by a series of long and short blinks. One long blink equals ten short blinks. Add the long and short blinks together to determine the DTC. After determining the DTC, refer to the DTC Troubleshooting.

   NOTE:
   - If the DTC is not memorized, the ABS indicator will go off for 3.6 seconds, and then come back on.
   - If the ABS indicator stays on, troubleshoot for ''ABS indicator does not go off, and no DTCs are stored'' (see page 19-56).

   The system will not indicate the DTC unless these conditions are met:

   - The brake pedal is not pressed.
   - The ignition switch is turned ON (II).
   - The SCS circuit is shorted to body ground before the ignition switch is turned ON (II).

Example of DTC 15

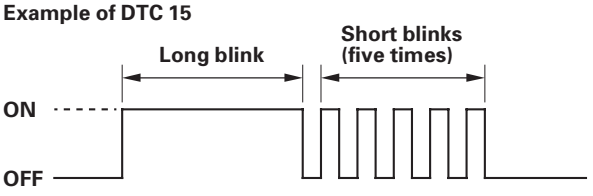

Example of DTC 22

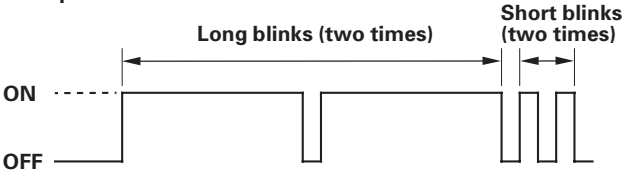

5. Turn the ignition switch OFF.

6. Disconnect the HDS from the DLC.

(cont'd)

General Troubleshooting Information (cont'd)

How to Clear DTCs

HDS Method

1. With the ignition switch OFF, connect the HDS to the 16P data link connector (DLC) (A) under the driver's side of the dashboard next to the accelerator pedal.

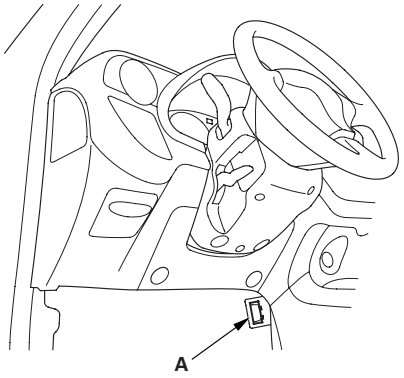

2. Turn the ignition switch ON (II), and clear the DTC(s) by following the screen prompts on the HDS.

   NOTE: See the HDS Help menu for specific instructions.

Service Check Signal (SCS) Circuit Method

1. With the ignition switch OFF, connect the HDS to the 16P data link connector (DLC) (A) under the driver's side of the dashboard next to the accelerator pedal.

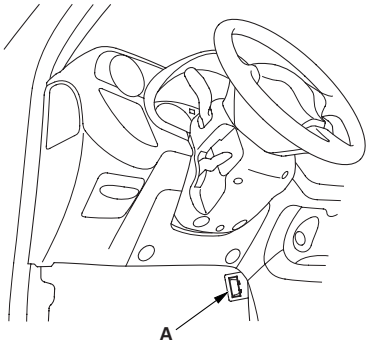

2. Short the SCS circuit to body ground using the HDS.
3. Press the brake pedal.
4. Turn the ignition switch ON (II) while continuing to press the brake pedal.
5. After the ABS indicator goes off, release the brake pedal.
6. After the ABS indicator comes on, press the brake pedal again.
7. After the ABS indicator goes off, release the brake pedal.

   You cannot clear the DTC unless these conditions are met:

   - The vehicle speed is 6 mph (10 km/h) or less.
   - The SCS circuit is shorted to body ground before the ignition switch is turned ON (II).
   - The brake pedal is pressed before the ignition switch is turned ON (II).

8. After a few seconds, the ABS indicator blinks twice and the DTC is cleared. If the indicator does not blink twice, repeat steps 1 thru 7. If the ABS indicator stays on after it blinks twice, check the DTC, because a problem was detected during initial diagnosis before shifting to DTC clearing mode.
9. Turn the ignition switch OFF.
10. Disconnect the HDS from the DLC.

DTC Troubleshooting Index

DTC	Detection Item	Note
11	Right-front wheel sensor (open/short to body ground/short to power)	(see page 19-47)
12	Right-front wheel sensor (electrical noise/intermittent interruption)	(see page 19-48)
13	Left-front wheel sensor (open/short to body ground/short to power)	(see page 19-47)
14	Left-front wheel sensor (electrical noise/intermittent interruption)	(see page 19-48)
15	Right-rear wheel sensor (open/short to body ground/short to power)	(see page 19-47)
16	Right-rear wheel sensor (electrical noise/intermittent interruption)	(see page 19-48)
17	Left-rear wheel sensor (open/short to body ground/short to power)	(see page 19-47)
18	Left-rear wheel sensor (electrical noise/intermittent interruption)	(see page 19-48)
21	Right-front pulser	(see page 19-50)
22	Left-front pulser	(see page 19-50)
23	Right-rear pulser	(see page 19-50)
24	Left-rear pulser	(see page 19-50)
31	ABS solenoid	(see page 19-50)
32	ABS solenoid	(see page 19-50)
33	ABS solenoid	(see page 19-50)
34	ABS solenoid	(see page 19-50)
35	ABS solenoid	(see page 19-50)
36	ABS solenoid	(see page 19-50)
37	ABS solenoid	(see page 19-50)
38	ABS solenoid	(see page 19-50)
41	Right-front wheel lock	(see page 19-51)
42	Left-front wheel lock	(see page 19-51)
43	Right-rear wheel lock	(see page 19-51)
44	Left-rear wheel lock	(see page 19-51)
51	Motor lock	(see page 19-51)
52	Motor stuck OFF	(see page 19-52)
53	Motor stuck ON	(see page 19-52)
54	ABS fail-safe relay	(see page 19-53)
61	Low FSR +B voltage	(see page 19-53)
62	High FSR +B voltage	(see page 19-53)
71	Different diameter tire	(see page 19-54)
81	Central processing unit (CPU) diagnosis, and ROM/RAM diagnosis	(see page 19-54)

Symptom Troubleshooting Index

Symptom	Diagnostic procedure
ABS indicator does not come on	Symptom Troubleshooting (see page 19-55)
ABS indicator does not go off, and no DTCs are stored	Symptom Troubleshooting (see page 19-56)

System Description

ABS Modulator-Control Unit Inputs and Outputs for 25P Connector

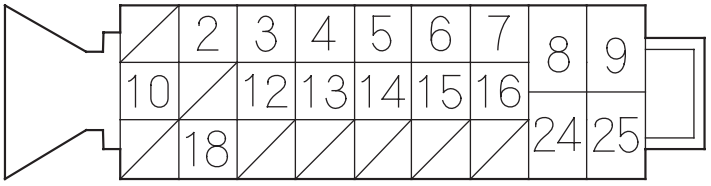

Wire side of female terminals

Terminal number	Wire color	Terminal sign (Terminal name)	Description	Measurement (Disconnect the ABS modulator-control unit connector)			
				Terminals	Conditions		Voltage
2	BLU	FRS (—) (Front-right sensor negative)	Detects right-front wheel sensor signal	2—18	Wheel	Spin wheel at 1 turn/second	AC: 0.053 V or above Reference Oscilloscope 0.15 V peak-to-peak or above
3	BLU/ ORN	FLS (+) (Front-left sensor positive)	Detects left-front wheel sensor signal	3—12			
4	WHT/ BLK	STOP	Detects brake switch signal	4—GND	Brake pedal	Pressed	Battery Voltage
						Released	Below 0.3 V
5	YEL/ RED	RLS (+) (Rear-left sensor positive)	Detects left-rear wheel sensor signal	5—14	Wheel	Spin wheel at 1 turn/second	AC: 0.053 V or above Reference Oscilloscope 0.15 V peak-to-peak or above
6	BLU/ YEL	RRS (—) (Rear-right sensor negative)	Detects right-rear wheel sensor signal	6—15			
7	BLU/ RED	WALP (Warning lamp)	Drives ABS indicator	7—GND	ABS indicator (Ignition switch ON (II))	ON	About 6 V
						OFF	Below 0.3 V
8	WHT/ GRN	FSR +B (ABS fail-safe relay battery)	Power source for the ABS fail-safe relay	8—GND	Every time		Battery Voltage
9	WHT/ RED	MR +B (Motor relay battery)	Power source for the motor relay	9—GND	Every time		Battery Voltage
10	GRY	DLC (Data link connector)	Communicates with the HDS	———	———		———

(cont'd)

System Description (cont'd)

ABS Modulator-Control Unit Inputs and Outputs for 25P Connector (cont'd)

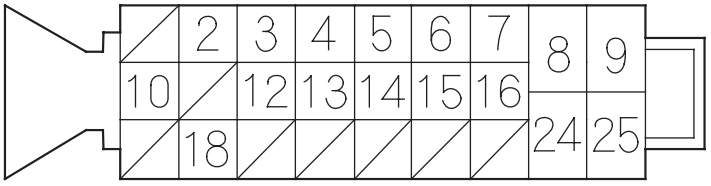

Wire side of female terminals

Terminal number	Wire color	Terminal sign (Terminal name)	Description	Measurement (Disconnect the ABS modulator-control unit connector)			
				Terminals	Conditions		Voltage
12	BRN/ WHT	FLS (—) (Front-left sensor negative)	Detects left-front wheel sensor signal	12—3	Wheel	Spin wheel at 1 turn/second	AC: 0.053 V or above Reference Oscilloscope 0.15 V peak-to-peak or above
13	BRN	SCS (Service check signal)	Detects service check connector signal (DTC indication or DTC clearing)	———	———		———
14	GRY/ RED	RLS (—) (Rear-left sensor negative)	Detects left-rear wheel sensor signal	14—5	Wheel	Spin wheel at 1 turn/second	AC: 0.053 V or above Reference Oscilloscope 0.15 V peak-to-peak or above
15	GRN/ YEL	RRS (+) (Rear-right sensor positive)	Detects right-rear wheel sensor signal	15—6			
16	BLK/ ORN	IG2 (Ignition 2)	Power source for activating the system	16—GND	Ignition switch ON (II)		Battery Voltage
18	GRN/ BLK	FRS (+) (Front-right sensor positive)	Detects right-front wheel sensor signal	18—2	Wheel	Spin wheel at 1 turn/second	AC: 0.053 V or above Reference Oscilloscope 0.15 V peak-to-peak or above
24	BLK	GND1 (Ground 1)	Ground	———	———		———
25	BLK	GND2 (Ground 2)	Ground	———	———		———

Features

When the brake pedal is pressed during driving, the wheels can lock before the vehicle comes to a stop. In such an event, the maneuverability of the vehicle is reduced if the front wheels are locked, and the stability of the vehicle is reduced if the rear wheels are locked, creating an extremely unstable condition. The ABS precisely controls the slip rate of the wheels to ensure maximum grip force from the tires, thereby ensuring the maneuverability and stability of the vehicle.
The ABS calculates the slip rate of the wheels based on the vehicle speed and the wheel speed, then it controls the brake fluid pressure to reach the target slip rate.

Grip Force of Tire and Road Surface

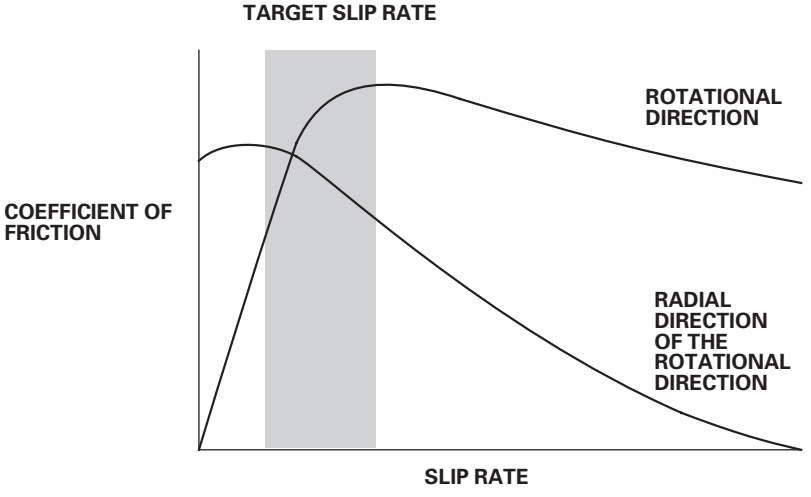

(cont'd)

System Description (cont'd)

COMPONENTS		MAIN FUNCTION
Wheel sensor		The wheel sensor outputs the speed signal to the ABS control unit according to the pulser's rotation speed.
ABS modulator-control unit	ABS control unit	The ABS control unit processes the signal from the wheel sensor, then outputs the ABS control signal to the modulator unit.
	Modulator unit	The modulator unit receives the control signal, then controls brake fluid pressure for each wheel.
Motor relay (inside of the ABS control unit)		The motor relay drives the ABS pump motor.
ABS fail-safe relay (inside of the ABS control unit)		The ABS fail-safe relay cuts the power to the solenoid valve when the problem is detected.

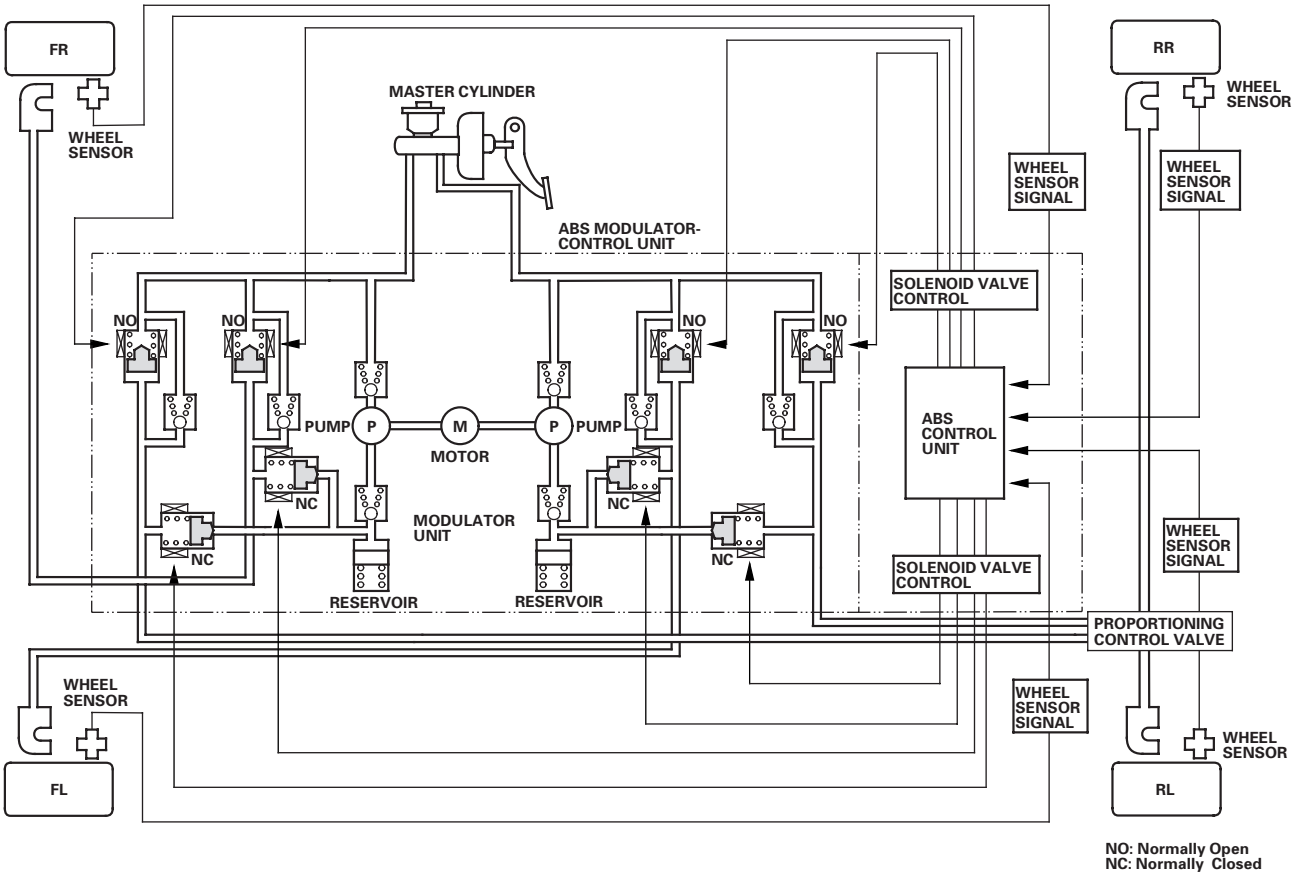

ABS Control Unit

Main Control

The ABS control unit detects the wheel speed based on the wheel sensor signal it received, then it calculates the vehicle speed based on the detected wheel speed. The control unit detects the vehicle speed during deceleration based on the rate of deceleration.

The ABS control unit calculates the slip rate of each wheel, and transmits the control signal to the modulator unit solenoid valve when the slip rate is high.

The hydraulic control has three modes: Pressure reducing, pressure retaining, and pressure intensifying.

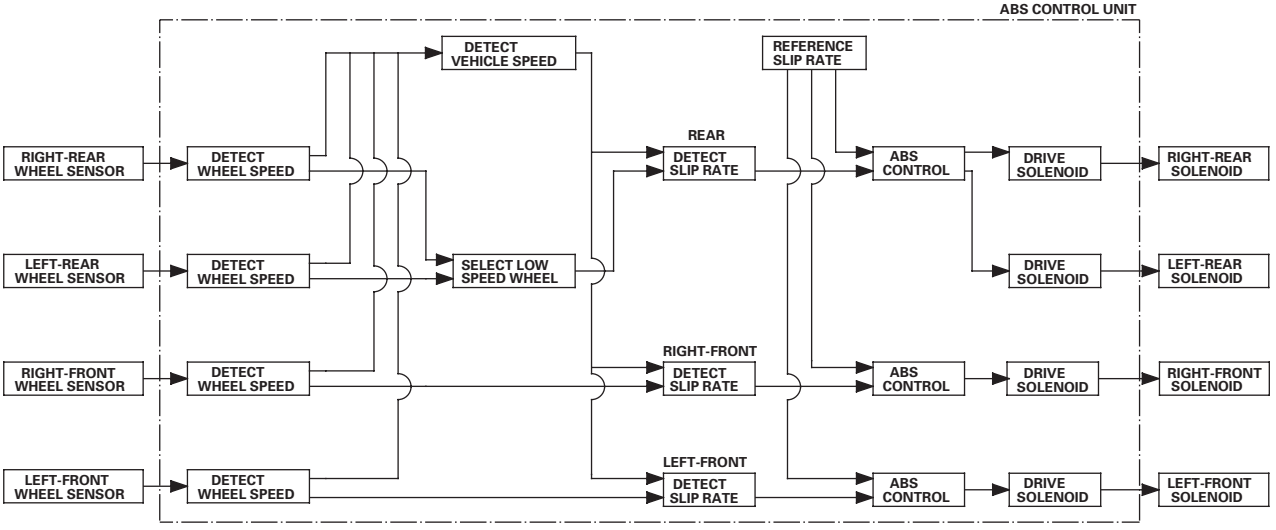

Self-diagnosis Function

1. The ABS control unit is equipped with a main CPU and a subCPU. Each CPU checks the other for problems.
2. The CPUs check the system circuits.
3. The ABS control unit turns on the ABS indicator when the unit detects a problem, and the unit stops ABS operation.
4. The self-diagnosis can be classified into these two categories:
   - Initial diagnosis
   - Regular diagnosis

On-board Diagnosis Function

The ABS can be diagnosed with the HDS.
The ALB Checker cannot be used with this system. For air bleeding, and checking wheel sensor signals, use the HDS. See the HDS Help menu for specific operating instructions.

(cont'd)

System Description (cont'd)

ABS Modulator

The ABS modulator consists of the inlet solenoid valve, outlet solenoid valve, reservoir, pump, and the pump motor. The modulator reduces the caliper fluid pressure directly. It is a circulating-type modulator because the brake fluid circulates through the caliper, reservoir, and the master cylinder. The hydraulic control has three modes: Pressure intensifying, pressure retaining, and pressure reducing. The hydraulic circuit is an independent four channel type, one channel for each wheel.

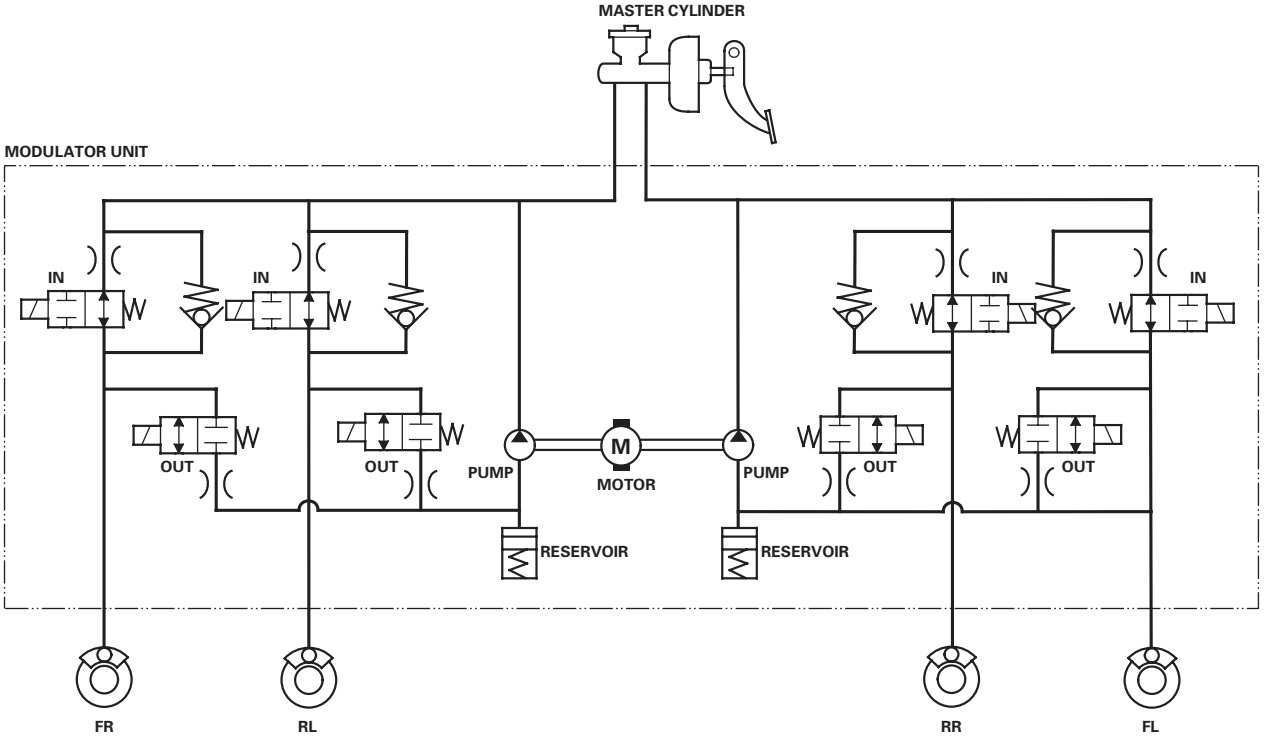

IN : INLET VALVE (NORMALLY OPEN)
OUT: OUTLET VALVE (NORMALLY CLOSED)

Pressure intensifying mode:	Inlet valve open, outlet valve closed: Master cylinder fluid is pumped out to the caliper.
Pressure retaining mode:	Inlet valve closed, outlet valve closed: Caliper fluid is retained by the inlet valve and outlet valve.
Pressure reducing mode:	Inlet valve closed, outlet valve open: Caliper fluid flows through the outlet valve to the reservoir.
Motor operation mode:	When starting the pressure reducing mode, the pump motor is ON. When stopping ABS operation, the pump motor is OFF. The reservoir fluid is pumped out by the pump, through the damping chamber, to the master cylinder.

Wheel Sensors

The wheel sensors are the magnetic contactless type. As the gear pulser teeth rotate past the wheel sensor's magnetic coil, AC current is generated. The AC frequency changes in accordance with the wheel speed. The ABS control unit detects the wheel sensor signal frequency and thereby detects the wheel speed.

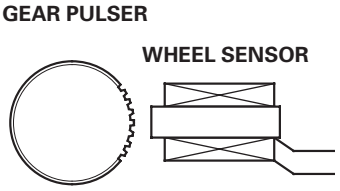

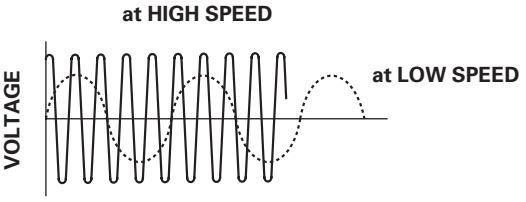

Wheel Speed and Modulator Control

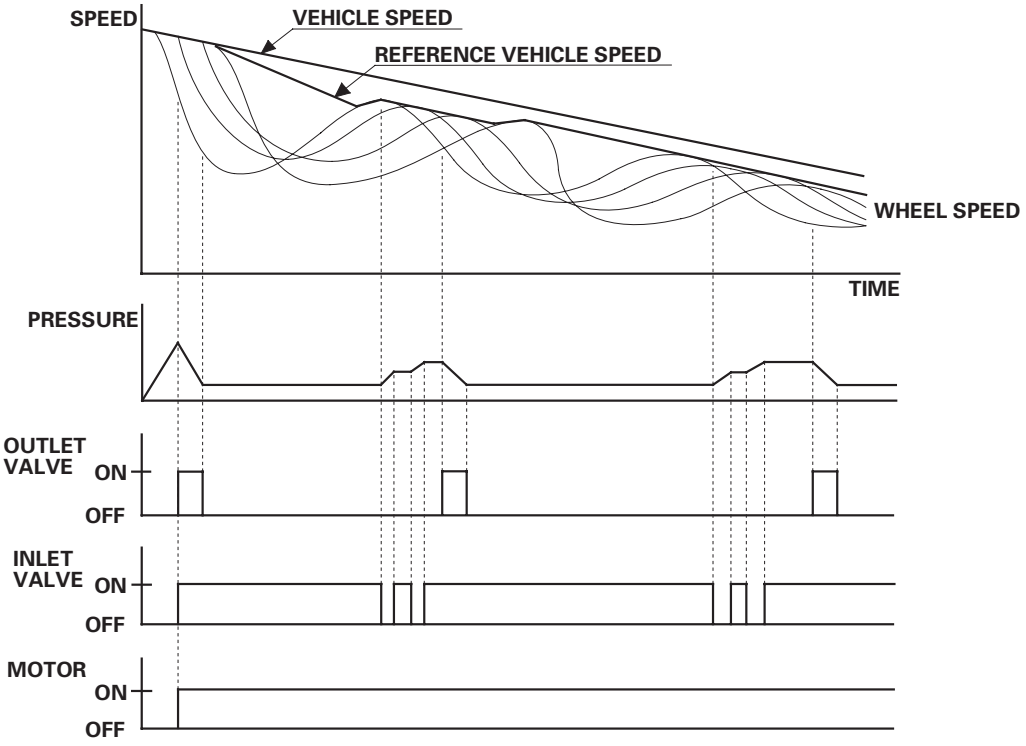

When the wheel speed drops sharply below the vehicle speed, the outlet valve opens momentarily to reduce the caliper fluid pressure. The pump motor starts at this time. As the wheel speed is restored, the inlet valve opens momentarily to increase the caliper fluid pressure.

Circuit Diagram

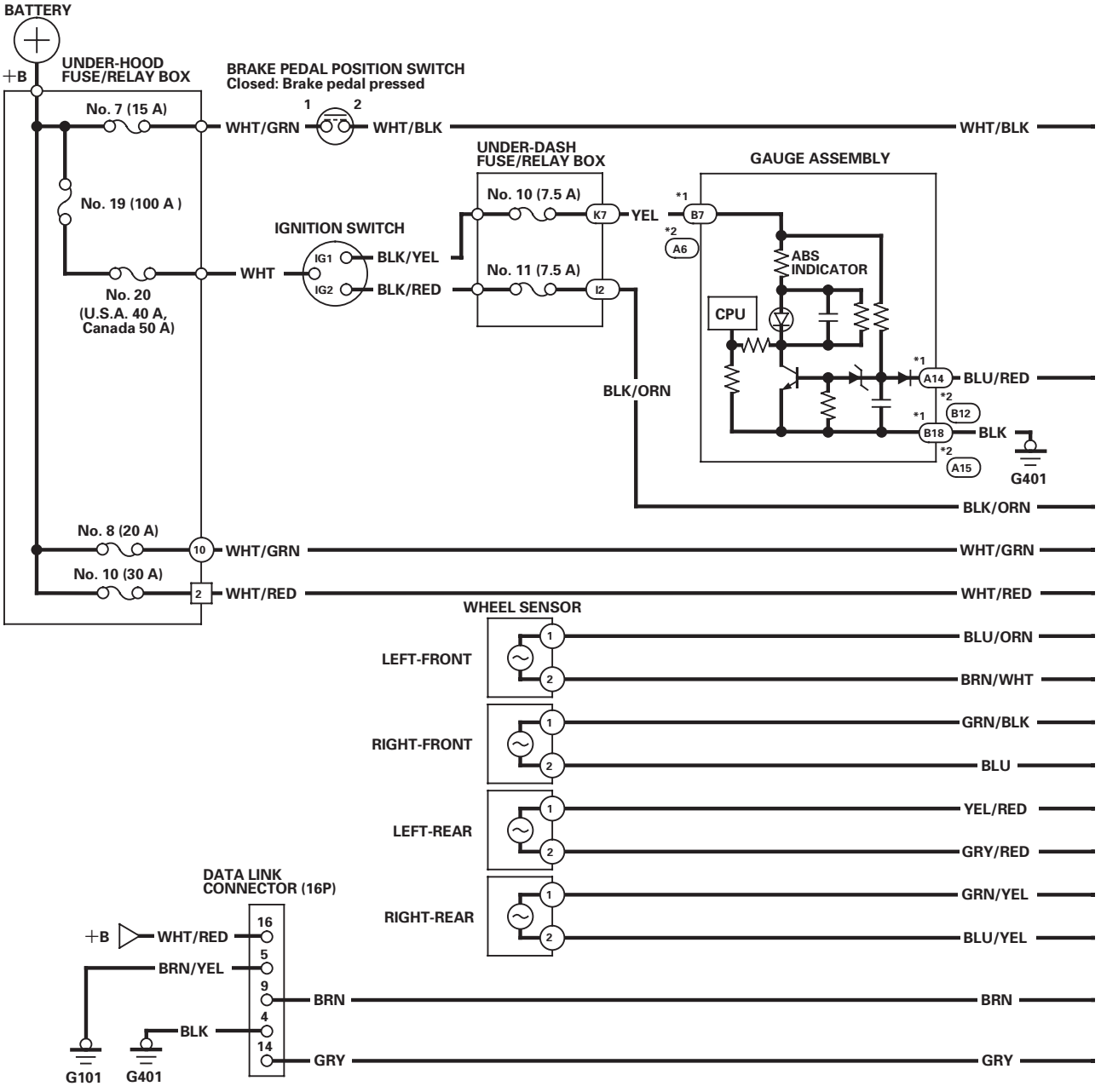

*1: '02-04 models
*2: '05-06 models

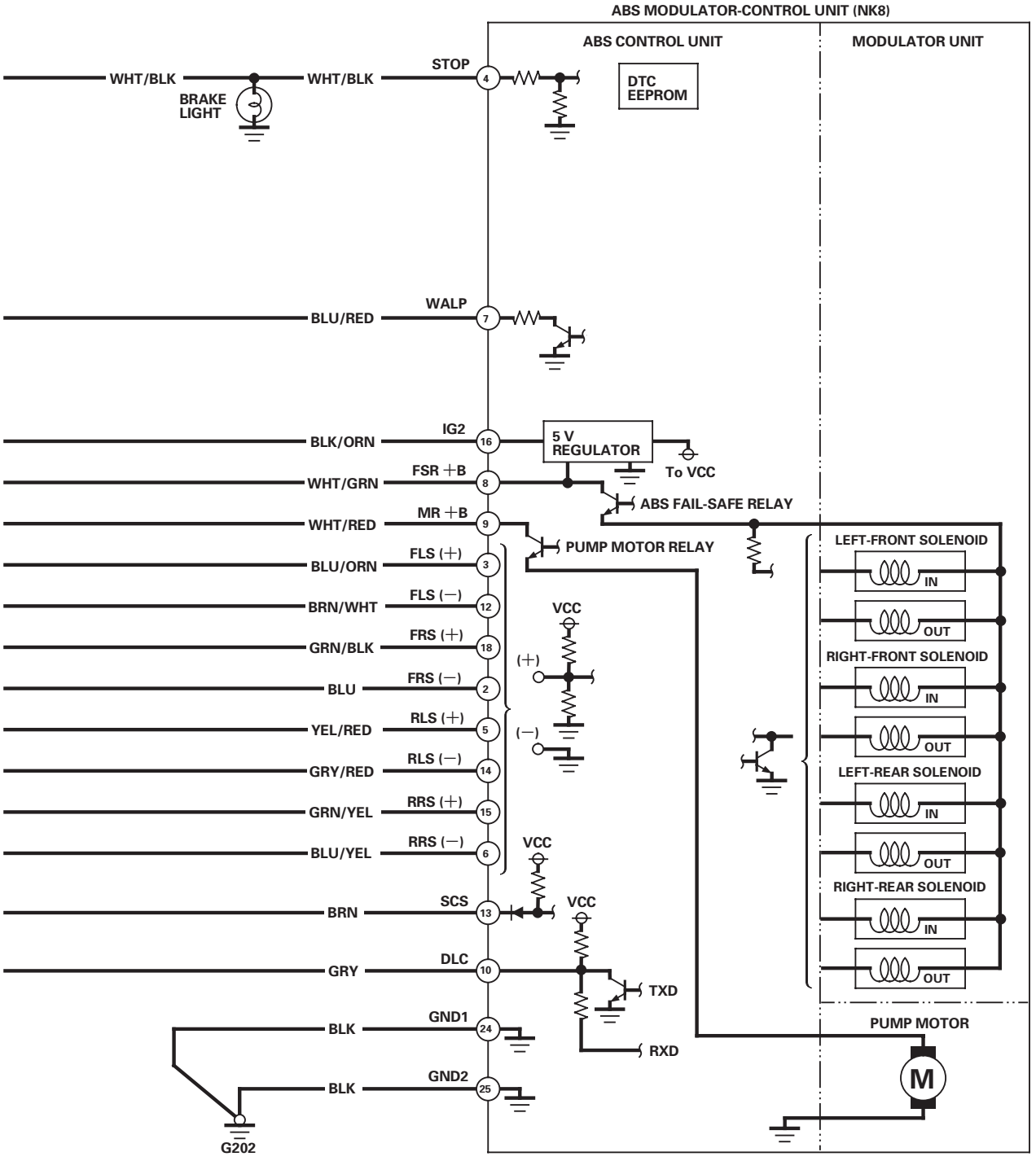
ABS MODULATOR-CONTROL UNIT (NK8)
ABS CONTROL UNIT
MODULATOR UNIT
WHT/BLK
BRAKE LIGHT
WHT/BLK
STOP
4
DTC EEPROM
BLU/RED
WALP
7
BLK/ORN
IG2
16
5 V REGULATOR
To VCC
WHT/GRN
FSR +B
8
ABS FAIL-SAFE RELAY
WHT/RED
MR +B
9
PUMP MOTOR RELAY
BLU/ORN
FLS (+)
3
BRN/WHT
FLS (−)
12
VCC
GRN/BLK
FRS (+)
18
(+)
BLU
FRS (−)
2
YEL/RED
RLS (+)
5
(−)
GRY/RED
RLS (−)
14
GRN/YEL
RRS (+)
15
BLU/YEL
RRS (−)
6
VCC
BRN
SCS
13
VCC
GRY
DLC
10
TXD
BLK
GND1
24
RXD
BLK
GND2
25
G202
LEFT-FRONT SOLENOID
IN
OUT
RIGHT-FRONT SOLENOID
IN
OUT
LEFT-REAR SOLENOID
IN
OUT
RIGHT-REAR SOLENOID
IN
OUT
PUMP MOTOR
M

(cont'd)

Circuit Diagram (cont'd)

UNDER-HOOD FUSE/RELAY BOX CONNECTORS
12P CONNECTOR (○ number) **2P CONNECTOR (□ number)**

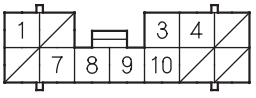

BRAKE PEDAL POSITION SWITCH
4P CONNECTOR

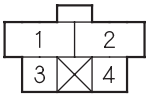

UNDER-DASH FUSE/RELAY BOX CONNECTORS
CONNECTOR I (5P) **CONNECTOR K (17P)**

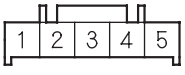

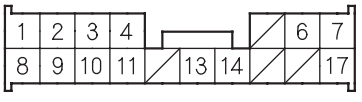

GAUGE ASSEMBLY CONNECTORS ('02-04 models)
CONNECTOR A (22P) **CONNECTOR B (18P)**

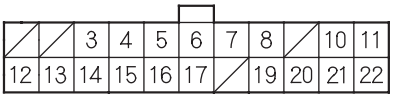

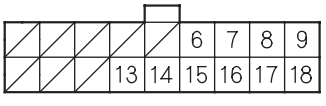

GAUGE ASSEMBLY CONNECTORS ('05-06 models)
CONNECTOR A (16P) **CONNECTOR B (20P)**

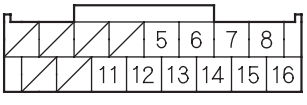

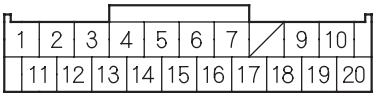

ABS MODULATOR-CONTROL UNIT 25P CONNECTOR

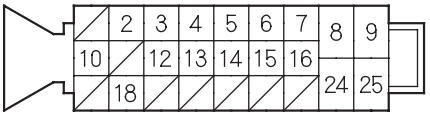

Wire side of female terminals

DATA LINK CONNECTOR (16P)

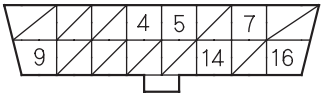

Terminal side of female terminals

WHEEL SENSOR 2P CONNECTOR
FRONT/LEFT-REAR **RIGHT-REAR**

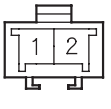

Terminal side of male terminals

DTC Troubleshooting

DTC 11, 13, 15, 17: Wheel Sensor (Open/Short to Body Ground/Short to Power)

1. Disconnect the ABS modulator-control unit 25P connector.

2. Start the engine.

3. Measure the voltage between the appropriate wheel sensor (+) circuit terminal of the ABS modulator-control unit 25P connector and body ground (see table).

DTC	Appropriate Terminal
11 (Right-front)	No. 18: FRS (+)
13 (Left-front)	No. 3: FLS (+)
15 (Right-rear)	No. 15: RRS (+)
17 (Left-rear)	No. 5: RLS (+)

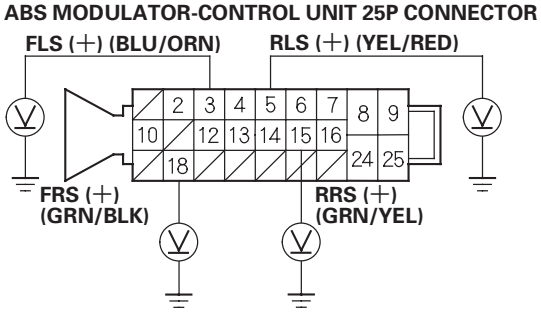

Is there battery voltage?

YES—Repair short to power in the circuit wires between the ABS modulator-control unit and the appropriate wheel sensor. ■

NO—Go to step 4.

4. Turn the ignition switch OFF.

5. Check for continuity between the appropriate wheel sensor (+) circuit terminal of the ABS modulator-control unit 25P connector and body ground (see table).

DTC	Appropriate Terminal
11 (Right-front)	No. 18: FRS (+)
13 (Left-front)	No. 3: FLS (+)
15 (Right-rear)	No. 15: RRS (+)
17 (Left-rear)	No. 5: RLS (+)

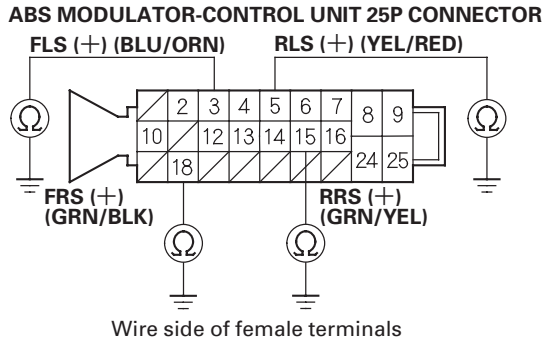

Is there continuity?

YES—Go to step 6.

NO—Go to step 7.

6. Disconnect the wire harness 2P connector from the appropriate wheel sensor, then check for continuity between the (+) and (−) terminals of the wire harness and body ground.

Is there continuity?

YES—Repair short to body ground in the (+) or (−) circuit wire between the ABS modulator-control unit and the wheel sensor. ■

NO—Replace the wheel sensor (see page 19-60). ■

(cont'd)

DTC Troubleshooting (cont'd)

7. Check the resistance between the appropriate wheel sensor (+) and (−) circuit terminals of the ABS modulator-control unit 25P connector (see table).

DTC	Appropriate Terminal	
	(+) Side	(−) Side
11 (Right-front)	No. 18: FRS (+)	No. 2: FRS (−)
13 (Left-front)	No. 3: FLS (+)	No. 12: FLS (−)
15 (Right-rear)	No. 15: RRS (+)	No. 6: RRS (−)
17 (Left-rear)	No. 5: RLS (+)	No. 14: RLS (−)

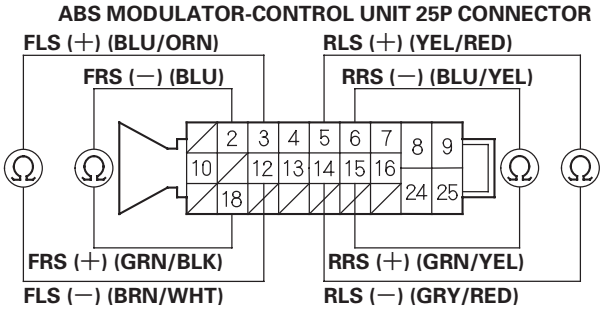

Is the resistance between 450−2,000 Ω ?

YES—Check for a loose terminals in the ABS modulator-control unit 25P connector. If necessary, substitute a known-good ABS modulator-control unit, and recheck. ■

NO—Go to step 8.

8. Disconnect the wire harness 2P connector from the appropriate wheel sensor, and check the resistance between the (+) and (−) terminals of the wheel sensor.

Is the resistance between 450−2,000 Ω ?

YES—Repair open in the (+) or (−) circuit wire, or short between the (+) circuit wire and the (−) circuit wire between the ABS modulator-control unit and the wheel sensor. ■

NO—Replace the wheel sensor (see page 19-60). ■

DTC 12, 14, 16, 18: Wheel Sensor (Electrical Noise/Intermittent Interruption)

NOTE: If the ABS indicator comes on because of an electrical noise, the indicator goes off when you test-drive the vehicle at 19 mph (30 km/h).

1. Visually check for appropriate wheel sensor and pulser installation (see table). Measure pulser-to-sensor clearance. Inspect the pulsers for chipped or damaged teeth (see page 19-60).

DTC	Appropriate Wheel Sensor
12	Right-front
14	Left-front
16	Right-rear
18	Left-rear

Are they installed correctly?

YES—Go to step 2.

NO—Reinstall or replace the appropriate wheel sensor or pulser. ■

2. Disconnect the ABS modulator-control unit 25P connector.

3. Measure the resistance between the appropriate wheel sensor (+) and (−) circuit terminals of the ABS modulator-control unit 25P connector (see table).

DTC	Appropriate Terminal	
	(+) Side	(−) Side
12 (Right-front)	No. 18: FRS (+)	No. 2: FRS (−)
14 (Left-front)	No. 3: FLS (+)	No. 12: FLS (−)
16 (Right-rear)	No. 15: RRS (+)	No. 6: RRS (−)
18 (Left-rear)	No. 5: RLS (+)	No. 14: RLS (−)

ABS MODULATOR-CONTROL UNIT 25P CONNECTOR

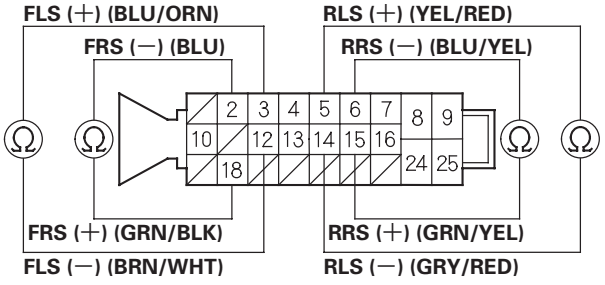

Wire side of female terminals

Is there less than 450 Ω ?

YES—Go to step 5.

NO—Go to step 4.

4. Check for continuity between the appropriate wheel sensor (+) circuit terminal and other wheel sensor (+) circuit terminals of the ABS modulator-control unit 25P connector (see table).

DTC	Appropriate Terminal	Other Terminals		
12	No. 18: FRS (+)	No. 3	No. 15	No. 5
14	No. 3: FLS (+)	No. 18	No. 15	No. 5
16	No. 15: RRS (+)	No. 18	No. 3	No. 5
18	No. 5: RLS (+)	No. 18	No. 3	No. 15

ABS MODULATOR-CONTROL UNIT 25P CONNECTOR

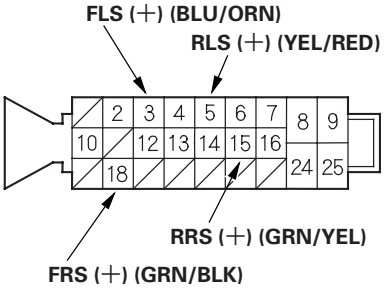

Wire side of female terminals

Is there continuity?

YES—Repair short in the wire between the appropriate wheel sensor and the other wheel sensor. ■

NO—Clear the DTC, and test-drive the vehicle. If the ABS indicator comes on and the same DTC is indicated, replace the ABS modulator-control unit (see page 19-59). ■

5. Disconnect the harness 2P connector from the appropriate wheel sensor, and check the resistance between the (+) side and the (−) side of the wheel sensor.

Is there less than 450 Ω ?

YES—Replace the wheel sensor (see page 19-60). ■

NO—Repair short to wire between the appropriate wheel sensor (+) and (−) circuits. ■

DTC Troubleshooting (cont'd)

DTC 21, 22, 23, 24: Pulser

1. Clear the DTC (see page 19-34).

2. Test-drive the vehicle at 19 mph (30 km/h) or more.

   Does the ABS indicator come on, and are DTCs 21, 22, 23, 24 indicated?

   YES—Go to step 3.

   NO—The system is OK at this time. ■

3. Check the appropriate pulser gear for a chipped or damaged tooth (see table) (see page 19-60).

DTC	Appropriate Pulser
21	Right-front
22	Left-front
23	Right-rear
24	Left-rear

   Is the pulser gear OK?

   YES—Check for loose terminals in the ABS modulator-control unit 25P connector. If necessary, substitute a known-good ABS modulator-control unit, and recheck. ■

   NO—Replace the driveshaft or hub unit with the chipped pulser gear. ■

DTC 31, 32, 33, 34, 35, 36, 37, 38: ABS Solenoid

1. Clear the DTC (see page 19-34).

2. Turn the ignition switch ON (II).

3. Verify the DTC.

   Does the ABS indicator come on, and are DTCs 31, 32, 33, 34, 35, 36, 37, 38 indicated?

   YES—Check for loose terminals in the ABS modulator-control unit 25P connector. If necessary, substitute a known-good ABS modulator-control unit, and recheck. ■

   NO—The system is OK at this time. ■

DTC 41, 42, 43, 44: Wheel Lock

1. Check for brake drag.

   Do the brakes drag?

   YES—Repair the brake drag. ■

   NO—Go to step 2.

2. Check the installation of the appropriate wheel sensor (see table).

DTC	Appropriate Pulser
41	Right-front
42	Left-front
43	Right-rear
44	Left-rear

   Is it correct?

   YES—The probable cause was the vehicle spun during cornering. ■

   NO—Reinstall the wheel sensor correctly. ■

DTC 51: Motor Lock

1. Check the No. 10 (30 A) fuse in the under-hood fuse/relay box, and reinstall the fuse if it is OK.

   Is the fuse OK?

   YES—Go to step 2.

   NO—Replace the fuse, and recheck. ■

2. Disconnect the ABS modulator-control unit 25P connector.

3. Measure the voltage between the ABS modulator-control unit 25P connector terminal No. 9 and body ground.

ABS MODULATOR-CONTROL UNIT 25P CONNECTOR

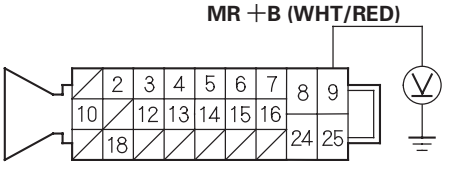

Wire side of female terminals

   Is there battery voltage?

   YES—Go to step 4.

   NO—Repair open in the wire between the No. 10 (30 A) fuse and the ABS modulator-control unit. ■

4. Connect the ABS modulator-control unit 25P connector.

5. Clear the DTC (see page 19-34).

6. Test-drive the vehicle at 6 mph (10 km/h) or more.

   Does the ABS indicator come on, and is DTC 51 indicated?

   YES—Replace the ABS modulator-control unit (see page 19-59). ■

   NO—The system is OK at this time. ■

DTC Troubleshooting (cont'd)

DTC 52: Motor Stuck OFF

1. Check the No. 10 (30 A) fuse in the under-hood fuse/relay box, and reinstall the fuse if it is OK.

   Is the fuse OK?

   YES—Go to step 2.

   NO—Replace the fuse, and recheck. ■

2. Disconnect the ABS modulator-control unit 25P connector.

3. Measure the voltage between the ABS modulator-control unit 25P connector terminal No. 9 and body ground.

ABS MODULATOR-CONTROL UNIT 25P CONNECTOR

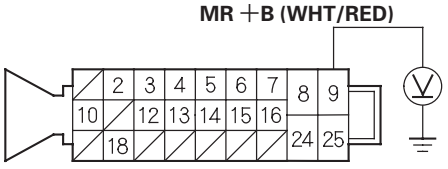

Wire side of female terminals

Is there battery voltage?

YES—Check for loose terminals in the ABS modulator-control unit 25P connector. If necessary, substitute a known-good ABS modulator-control unit, and recheck. ■

NO—Repair open in the wire between the No. 10 (30 A) fuse and the ABS modulator-control unit. ■

DTC 53: Motor Stuck ON

1. Clear the DTC (see page 19-34).

2. Test-drive the vehicle.

   Does the ABS indicator come on, and is DTC 53 indicated?

   YES—Replace the ABS modulator-control unit (see page 19-59). ■

   NO—The system is OK at this time. ■

DTC 54: ABS Fail-safe Relay

1. Clear the DTC (see page 19-34).

2. Test-drive the vehicle.

   Does the ABS indicator come on, and is DTC 54 indicated?

   YES—Replace the ABS modulator-control unit (see page 19-59).■

   NO—Intermittent failure; the vehicle is OK at this time.■

DTC 61, 62: FSR +B Voltage

1. Clear the DTC (see page 19-34).

2. Test-drive the vehicle at 6 mph (10 km/h) or more.

   Does the ABS indicator come on?

   YES—Go to step 3.

   NO—The system is OK at this time.■

3. Verify the DTC.

   Is DTC 61 or 62 indicated?

   YES—Check the charging system.■

   NO—Do the appropriate troubleshooting for the DTC.■

DTC Troubleshooting (cont'd)

DTC 71: Different Diameter Tire

1. Clear the DTC (see page 19-34).
2. Test-drive the vehicle.

   Does the ABS indicator come on, and is DTC 71 indicated?

   YES—Make sure all four tires are the specified size and are inflated to proper specification. ■

   NO—Intermittent failure; the vehicle is OK at this time. ■

DTC 81: Central Processing Unit (CPU) Diagnosis, and ROM/RAM Diagnosis

1. Check for other DTCs.

   Is another DTC present?

   YES—Do the appropriate troubleshooting for the DTC. ■

   NO—Go to step 2.
2. Clear the DTC (see page 19-34).
3. Test-drive the vehicle.

   Does the ABS indicator come on, and is DTC 81 indicated?

   YES—Replace the ABS modulator-control unit (see page 19-59). ■

   NO—Intermittent failure; the vehicle is OK at this time. ■

Symptom Troubleshooting

ABS indicator does not come on

1. Turn the ignition switch ON (II), and watch the ABS indicator.

   Does the ABS indicator come on for 2 seconds and then go off?

   YES—The system is OK at this time. ■

   NO—Go to step 2.

2. Turn the ignition switch OFF then ON (II) again.

   Does the brake system indicator come on?

   YES—Go to step 3.

   NO—Repair open in the indicator power source circuit: ■

   - Blown No. 10 (7.5 A) fuse in the under-dash fuse/relay box.
   - Open in the wire between the No. 10 (7.5 A) fuse and the gauge assembly.
   - Open in the circuit inside the fuse box.

3. Turn the ignition switch OFF.

4. Disconnect the ABS modulator-control unit 25P connector.

5. Turn the ignition switch ON (II).

   Does the ABS indicator come on?

   YES—Check for loose terminals in the ABS modulator-control unit 25P connector. If necessary, substitute a known-good ABS modulator-control unit, and recheck. ■

   NO—Go to step 6.

6. Turn the ignition switch OFF.

7. Remove the gauge assembly (see page 22-74).

8. Disconnect the gauge assembly connector A (22P) ('02-04 models) or gauge assembly connector B (20P) ('05-06 models).

9. Check for continuity between the gauge assembly connector A (22P) terminal No. 14 ('02-04 models) or gauge assembly connector B (20P) terminal No.12 ('05-06 models) and body ground.

   '02-04 models

   GAUGE ASSEMBLY CONNECTOR A (22P)

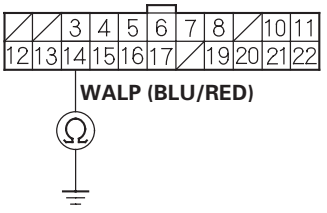

Wire side of female terminals

   '05-06 models

   GAUGE ASSEMBLY CONNECTOR B (20P)

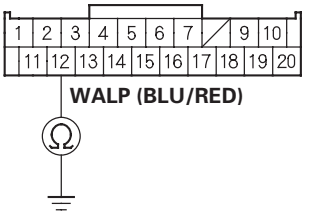

Wire side of female terminals

   Is there continuity?

   YES—Repair short to body ground in the wire between the gauge assembly and the ABS modulator-control unit. ■

   NO—Go to step 10.

(cont'd)

Symptom Troubleshooting (cont'd)

10. '02-04 models: Connect the gauge assembly connector A (22P), and disconnect the gauge assembly connector B (18P).
    '05-06 models: Connect the gauge assembly connector B (20P), and disconnect the gauge assembly connector A (16P).

11. '02-04 models: Check for continuity between the gauge assembly connector B (18P) terminal No. 18 and body ground.
    '05-06 models: Check for continuity between the gauge assembly connector A (16P) terminal No. 15 and body ground.

'02-04 models

GAUGE ASSEMBLY CONNECTOR B (18P)

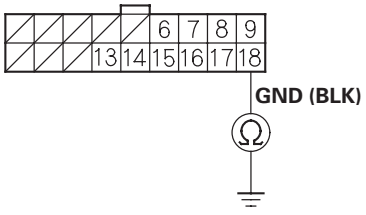

Wire side of female terminals

'05-06 models

GAUGE ASSEMBLY CONNECTOR A (16P)

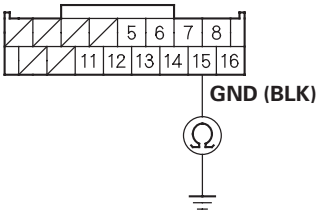

Wire side of female terminals

Is there continuity?

YES—Check for loose terminals in the gauge assembly connectors. If the connector is OK, replace the gauge assembly (see page 22-74). ■

NO—Repair open in the wire between the gauge assembly and body ground (G401). ■

ABS indicator does not go off, and no DTCs are stored

1. Check the No. 8 (20 A) fuse in the under-hood fuse/relay box, and reinstall the fuse if it is OK.

   Is the fuse OK?

   YES—Go to step 2.

   NO—Replace the fuse, and recheck. If the fuse is blown, check for a short to body ground in the fuse circuit. If the circuit is OK, replace the ABS modulator-control unit (see page 19-59). ■

2. Check the No. 11 (7.5 A) fuse in the under-dash fuse/relay box, and reinstall the fuse if it is OK.

   Is the fuse OK?

   YES—Go to step 3.

   NO—Replace the fuse, and recheck. If the fuse is blown, check for a short to body ground in the fuse circuit. ■

3. Disconnect the ABS modulator-control unit 25P connector.

4. Measure the voltage between the ABS modulator-control unit 25P connector terminal No. 8 and body ground.

ABS MODULATOR-CONTROL UNIT 25P CONNECTOR

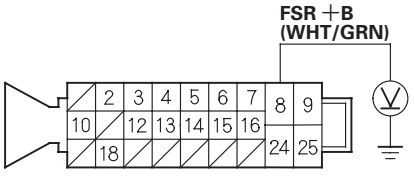

Wire side of female terminals

Is there battery voltage?

YES—Go to step 5.

NO—Repair open in the wire between the No. 8 (20 A) fuse and the ABS modulator-control unit. ■

5. Turn the ignition switch ON (II).

6. Measure the voltage between the ABS modulator-control unit 25P connector terminal No. 16 and body ground.

ABS MODULATOR-CONTROL UNIT 25P CONNECTOR

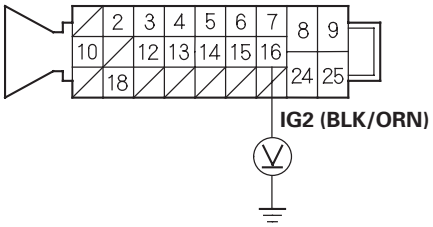

Wire side of female terminals

Is there battery voltage?

YES—Go to step 7.

NO—Repair open in the wire between the No. 11 (7.5 A) fuse and the ABS modulator-control unit. ■

7. Turn the ignition switch OFF.

8. Check for continuity between the ABS modulator-control unit 25P connector terminal No. 24 and body ground.

ABS MODULATOR-CONTROL UNIT 25P CONNECTOR

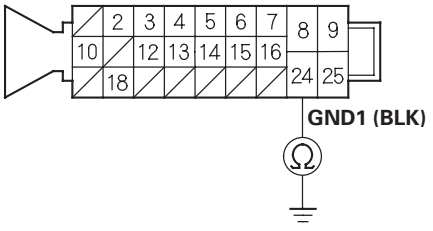

Wire side of female terminals

Is there continuity?

YES—Go to step 9.

NO—Repair open in the wire between the ABS modulator-control unit and body ground (G202). ■

9. Turn the ignition switch ON (II).

10. Connect the ABS modulator-control unit 25P connector terminal No. 7 and body ground with a jumper wire.

ABS MODULATOR-CONTROL UNIT 25P CONNECTOR

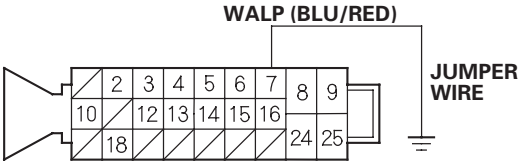

Wire side of female terminals

Does the ABS indicator go off?

YES—Check for loose terminals in the ABS modulator-control unit 25P connector. If necessary, substitute a known-good ABS modulator-control unit, and recheck. ■

NO—Go to step 11.

(cont'd)

Symptom Troubleshooting (cont'd)

11. Connect the gauge assembly connector A (22P) terminal No. 14 ('02-04 models) or gauge assembly connector B (20P) terminal No. 12 ('05-06 models) and body ground with a jumper wire.

'02-04 models

GAUGE ASSEMBLY CONNECTOR A (22P)

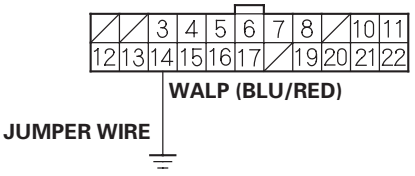

Wire side of female terminals

'05-06 models

GAUGE ASSEMBLY CONNECTOR B (20P)

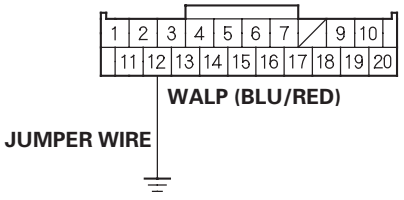

Wire side of female terminals

Does the ABS indicator go off?

YES—Repair open in the wire between the gauge assembly and the ABS modulator-control unit. ■

NO—Check for loose gauge assembly connectors. If the connector is OK, replace the gauge assembly (see page 22-74). ■

ABS Modulator-Control Unit Removal and Installation

NOTE:
- Do not spill brake fluid on the vehicle; it may damage the paint; if brake fluid gets on the paint, wash it off immediately with water.
- Take care not to damage or deform the brake lines during removal and installation.
- To prevent the brake fluid from flowing, plug and cover the hose ends and joints with a shop towel or equivalent material.

Removal

1. Pull up the lock (A) of the ABS modulator-control unit 25P connector (B), and the connector disconnects itself.

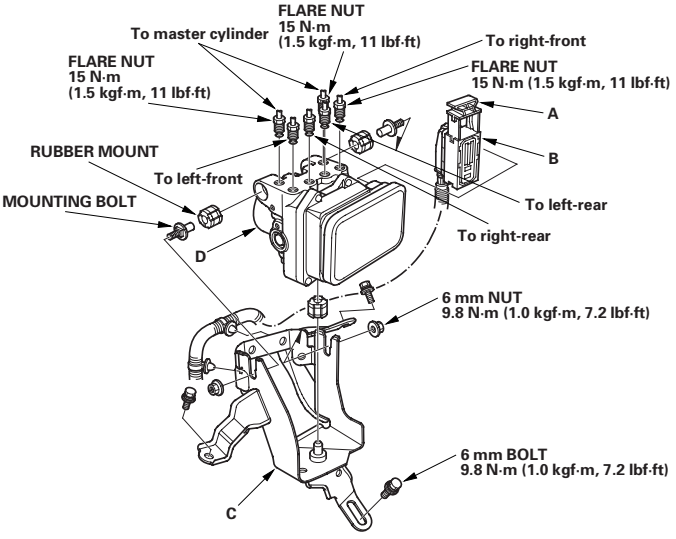

2. Disconnect the six brake lines.

3. Remove the three 6 mm bolts, and remove the ABS modulator-control unit bracket (C) from the body.

4. Separate the ABS modulator-control unit (D) from the bracket by removing the two 6 mm nuts.

Installation

1. Install the ABS modulator-control unit on the bracket with two 6 mm nuts.

2. Install the ABS modulator-control unit bracket on the body with three 6 mm bolts.

3. Reconnect the six brake lines, then tighten the nuts.

4. Align the connecting surface of the ABS modulator-control unit 25P connector.

5. Push in the lock of the ABS modulator-control unit 25P connector until you hear it click into place, then connect the connector.

6. Bleed the brake system, starting with the front wheels (see page 19-8).

7. Start the engine, and check that the ABS indicator goes off.

8. Test-drive the vehicle, and check that the ABS indicator does not come on.

Wheel Sensor Inspection

1. Inspect the front and rear pulsers for chipped or damaged teeth.

2. Measure the air gap between the wheel sensor and pulser all the way around while rotating the pulser. Remove the rear brake disc to measure the gap on the rear wheel sensor. If the gap exceeds 1.0 mm (0.04 in.), check for a bent suspension arm.

   Standard:
   Front/Rear: 0.4—1.0 mm (0.02—0.04 in.)

   Front/Rear

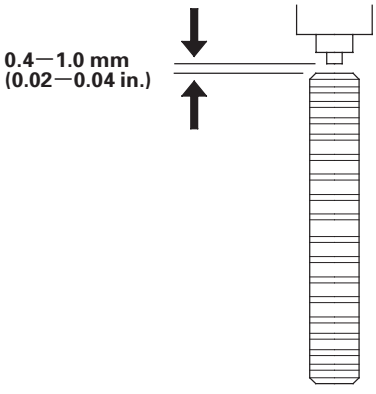

Wheel Sensor Replacement

NOTE:
- Install the wheel sensor carefully to avoid twisting the wires.
- The left-front wheel sensor has black color wire with the blue color stripe, while the right-front wheel sensor has black color wire with the white color stripe.

Front

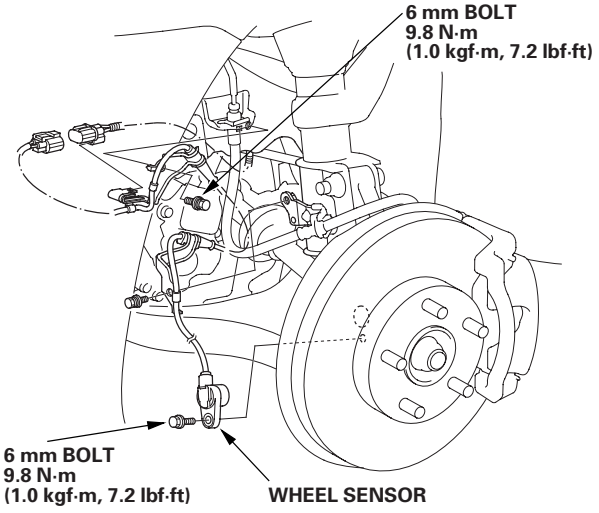

Rear

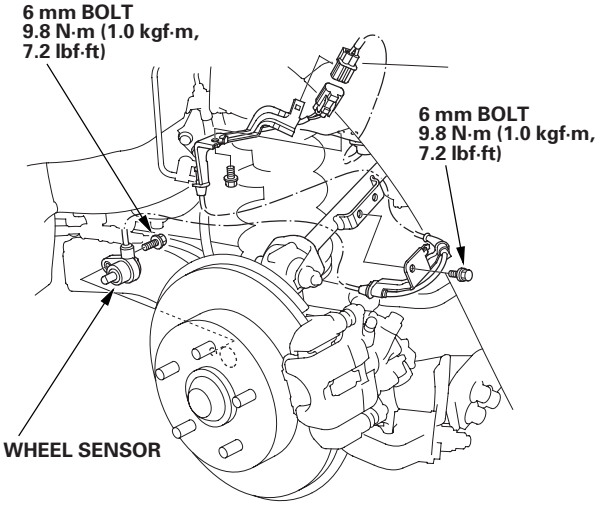

Body

Special Tools 20-2

Doors

Component Location Index 20-3
Door Panel Removal/Installation 20-5
Door Outer Handle Replacement 20-6
Door Latch Replacement 20-9
Door Glass and Regulator Replacement 20-10
Door Sash Trim Replacement 20-11
Door Glass Outer Weatherstrip Replacement 20-12
Door Weatherstrip Replacement 20-12
Door Upper Seal Replacement 20-13
Door Glass Adjustment 20-13
Door Position Adjustment 20-14
Door Striker Adjustment 20-15

Mirrors

Component Location Index 20-16
Power Mirror Replacement 20-17
Mirror Holder Replacement 20-18
Rearview Mirror Replacement 20-18

Glass

Component Location Index 20-19
Windshield Replacement 20-21
Windshield Side Trim Retainer Replacement 20-27
Rear Window Replacement 20-27
Quarter Glass Replacement 20-33

Moonroof

Component Location Index 20-38
Symptom Troubleshooting Index 20-39
Glass Height Adjustment 20-40
Glass Replacement 20-40
Sunshade Replacement 20-41
Motor Replacement 20-42
Frame and Drain Tube Replacement 20-43
Cable Assembly Replacement 20-45
Closing Force and Opening Drag Check ... 20-48

Interior Trim

Component Location Index 20-49
Trim Removal/Installation-Door Area 20-50
Trim Removal/Installation -Rear Side Area 20-51
Trim Removal/Installation -Quarter Pillar Area 20-52
Trim Removal/Installation-Cargo Area 20-53
Trim Removal/Installation-Hatch Area 20-54
Headliner Removal/Installation 20-55
* Carpet Replacement 20-57

Consoles

* Center Console Removal/Installation 20-59
Center Console Box Replacement 20-61
Center Console Rear Cover Replacement 20-62

Dashboard

Driver's Dashboard Lower Cover Removal/Installation 20-63
Driver's Dashboard Under Cover Removal/Installation 20-63
Driver's Switch Panel Removal/Installation 20-64
Heater Control Panel Removal/Installation 20-64
Dashboard Center Lower Cover Removal/Installation 20-65
Center Panel Removal/Installation 20-66
Passenger's Dashboard Lower Cover Removal/Installation 20-67
* Glove Box Removal/Installation 20-67
Driver's Side Vent Panel Removal/Installation 20-68
Passenger's Side Vent Removal/Installation 20-68
* Dashboard/Steering Hanger Beam Removal/Installation 20-69
Dashboard/Steering Hanger Beam Disassembly/Reassembly 20-71

Seats

Component Location Index 20-74
* Front Seat Removal/Installation 20-75
* Front Seat Disassembly/ Reassembly-Driver's 20-77
* Front Seat Disassembly/ Reassembly-Passenger's 20-78
* Front Seat Cover Replacement 20-79
* Front Seat Lumbar Support Replacement 20-83
Rear Seat Removal/Installation 20-85
Rear Seat-back Pivot Bracket Replacement 20-86
Rear Seat-back Striker Replacement 20-86
Rear Seat-back Latch Replacement 20-87
Rear Seat-back Cover Replacement 20-87
Rear Seat Cushion Cover Replacement 20-89

Bumpers

Front Bumper Removal/Installation 20-90
Front Bumper Spoiler Replacement 20-92
Front Bumper Lower Grille Replacement 20-93
Front Bumper Side Cover Replacement ... 20-94
Rear Bumper Removal/Installation 20-95

Hood

Adjustment 20-97
Hood Seal Replacement 20-98
Hood Insulator Replacement 20-99

Hatch

Adjustment 20-100
Hatch Support Strut Replacement 20-101
Hatch Weatherstrip Replacement 20-102

Fuel Fill Door

Adjustment 20-103

Exterior Trim

Front Grille Cover Replacement 20-104
Cowl Cover Replacement 20-105
Roof Molding Replacement 20-106
Side Sill Panel Replacement 20-107
Hatch Spoiler Replacement 20-108
Emblem Replacement 20-109

Fenderwell

Front Inner Fender Replacement 20-111
Front Fender Fairing Replacement 20-112
Rear Strake Replacement 20-113
Fuel Pipe Protector Replacement 20-113
Rear Inner Fender Replacement 20-114
Rear Air Outlet Replacement 20-114

Openers

Component Location Index 20-115
Hood Opener Cable Replacement 20-116
* Fuel Fill Door Opener Cable Replacement 20-117
Hood Latch Replacement 20-119
Fuel Fill Door Opener Replacement 20-120
Hatch Handle Replacement 20-121
Hatch Latch Replacement 20-122

Frame

Subframe Replacement 20-123
Frame Brace and Gusset Replacement 20-124
Frame Repair Chart 20-126

Special Tools

Ref. No.	Tool Number	Description	Qty
①	SOJATP2014	KTC Trim Tool Set	1

①: Available through the American Honda Tool and Equipment Program; call 888-424-6857.

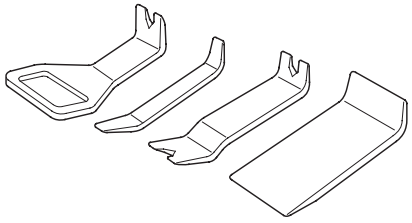

①

Component Location Index

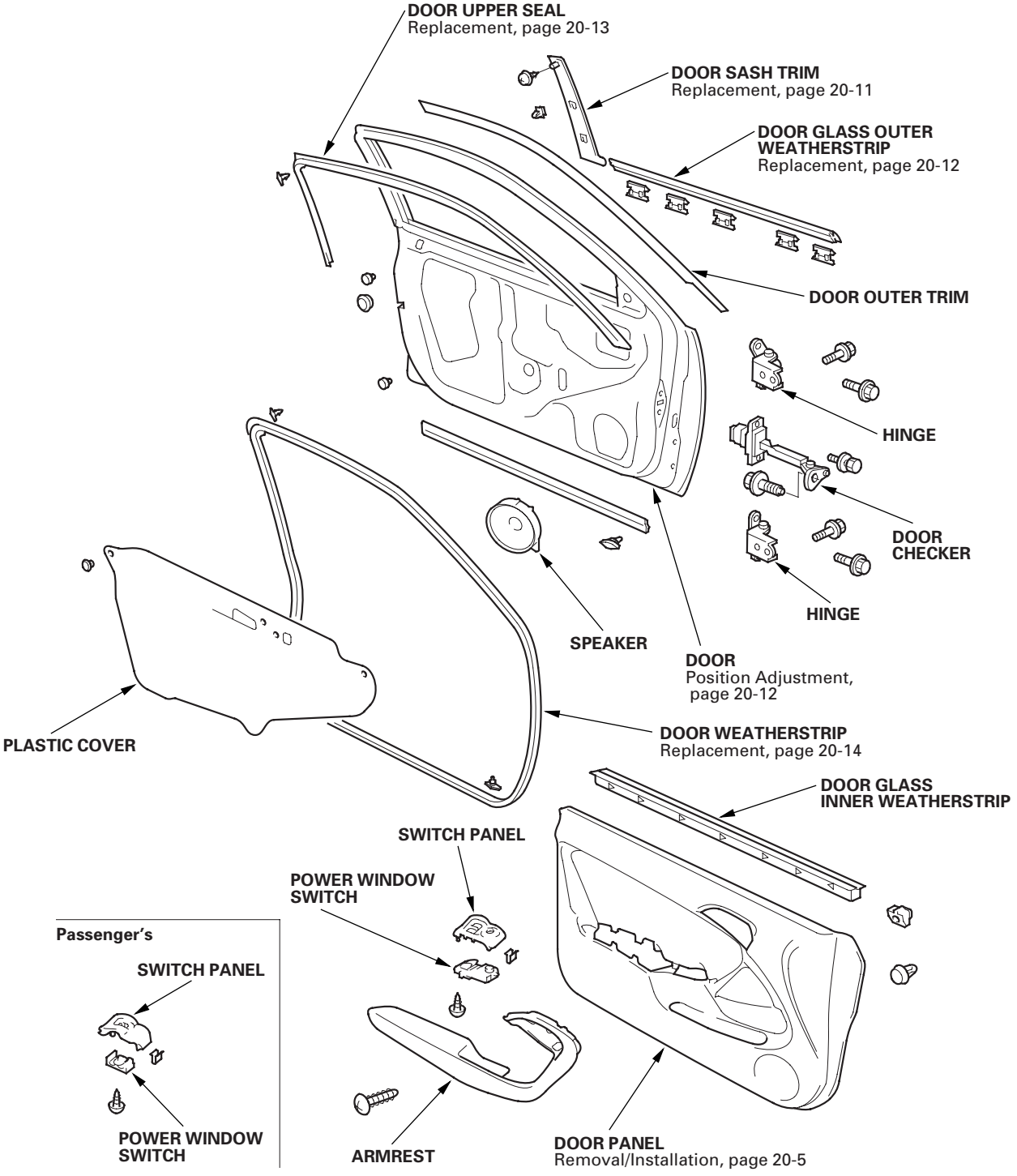

(cont'd)

Component Location Index (cont'd)

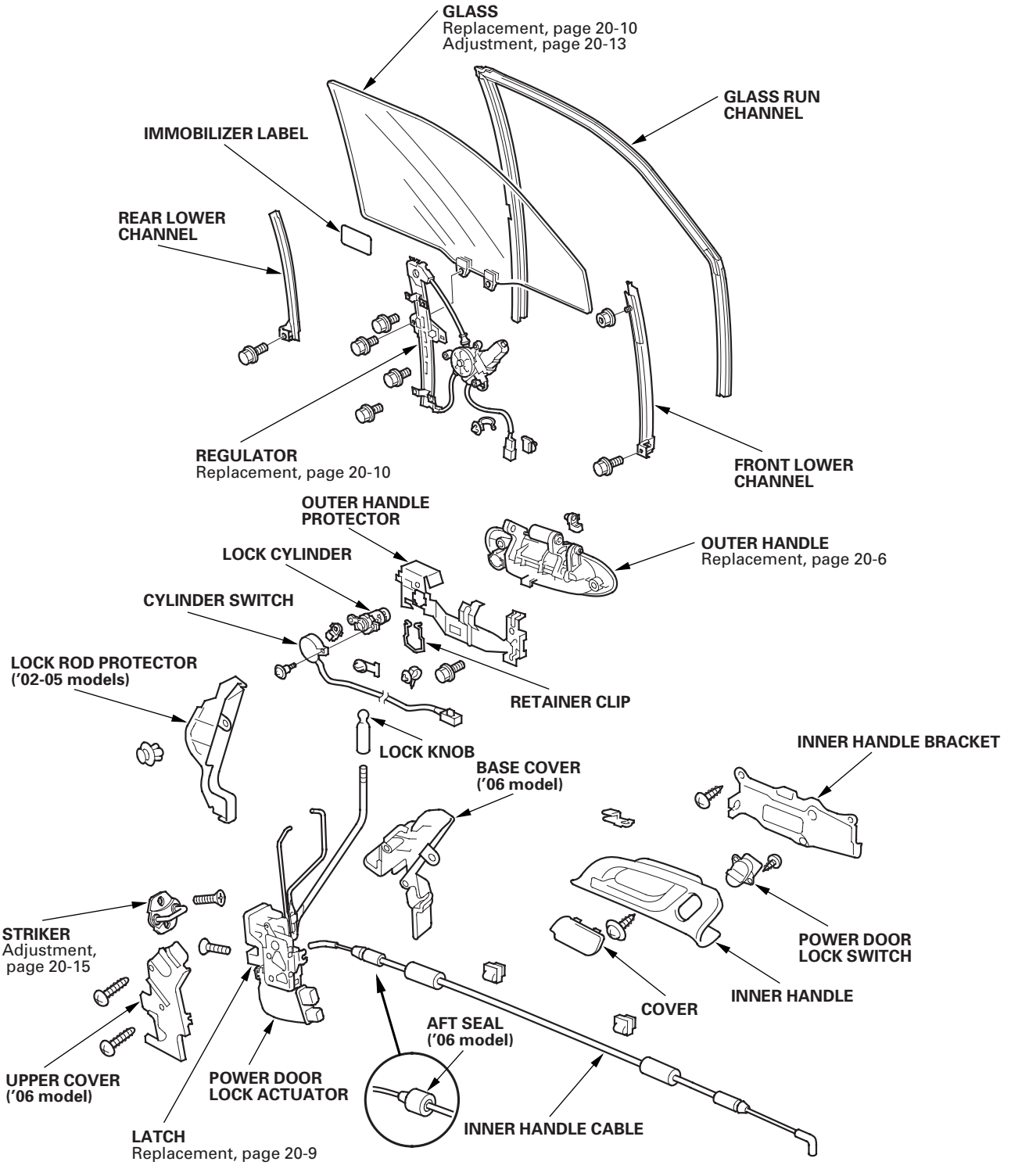

Door Panel Removal/Installation

Special Tools Required
- Trim pad remover, Snap-on A 177A or equivalent, commercially available
- KTC trim tool set SOJATP2014

NOTE: Use the appropriate tool from the KTC trim tool set to avoid damage when prying components.

1. Remove the inner handle (A). Take care not to scratch the door panel.

   –1 Pry out on the bottom portion of the cover (B) to release the clip (C) and tabs (D), then remove the cover.
   –2 Remove the screws.
   –3 Pull the inner handle out to release the hook (E).
   –4 Pull the inner handle forward and out half-way to release the hook (F).
   –5 Disconnect the inner handle cable (G) and power door lock switch connector (H).

Fastener Locations

▶ : Screw, 2

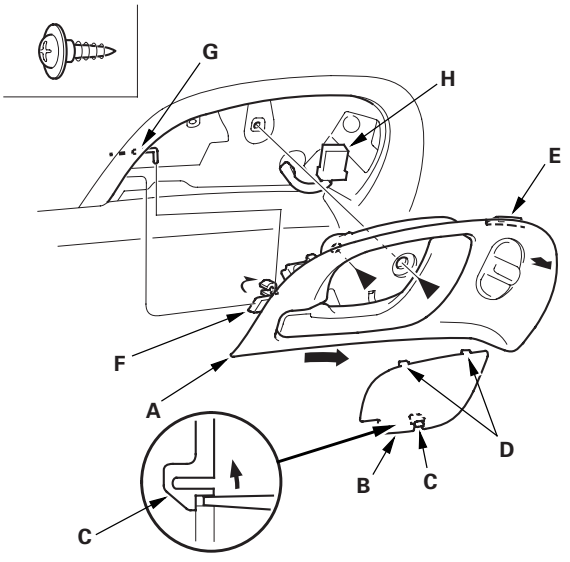

2. Lower the glass fully.

3. Remove the screws from the armrest portion and inner handle opening.

Fastener Locations

▶ : Screw, 3

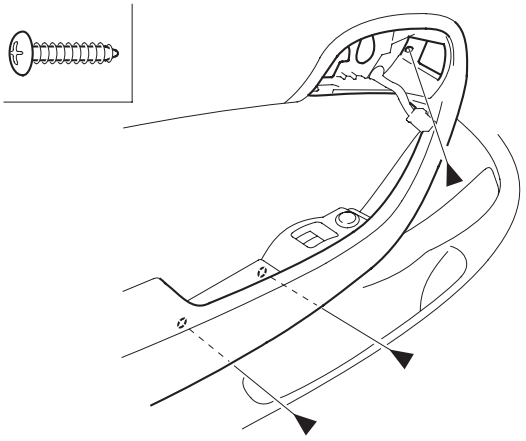

4. Remove the switch panel (A). Take care not to scratch the door panel.

   –1 Pry out the front portion of the panel to release the clips.
   –2 Release the hooks (B) by pu lling the panel forward.
   –3 Disconnect the power window switch connector (C).

Fastener Locations

▷ : Clip, 2

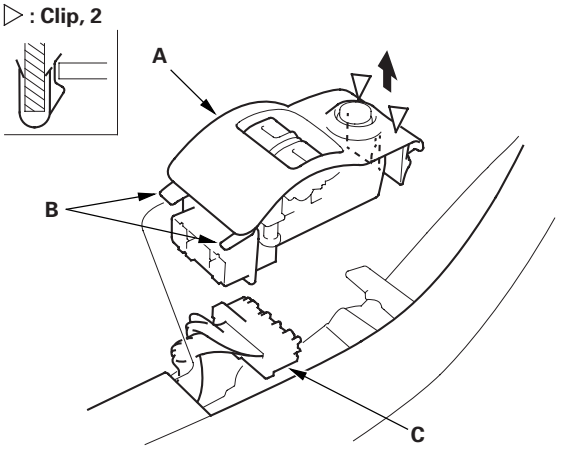

(cont'd)

Door Panel Removal/Installation (cont'd)

5. Remove the mirror mount cover (see step 2 on page 20-17).

6. Release the clips that hold the door panel (A) with a commercially available trim pad remover (B), then remove the door panel by pulling it upward to release it from the lock knob (C) and door. Remove the door panel with as little bending as possible to avoid creasing or breaking it. Detach the harness clip (D) from the door panel.

Fastener Locations

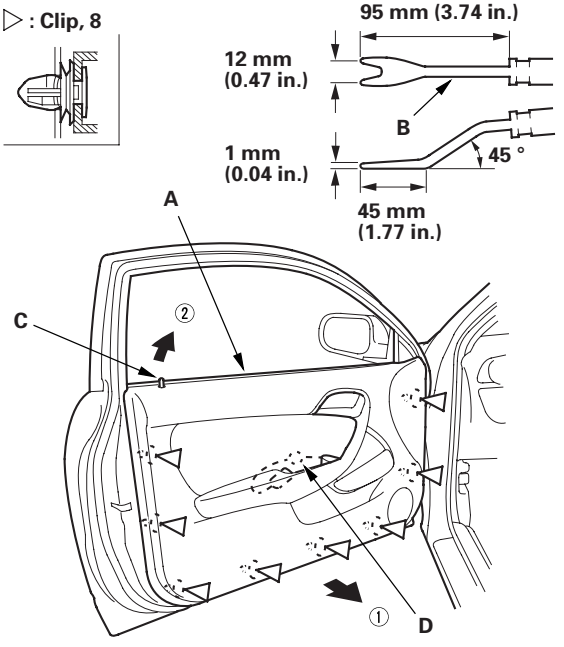

7. Install the door panel in the reverse order of removal, and note these items:

   - Replace any damaged or stress-whitened clips.
   - Make sure the connectors are plugged in properly, and the cable is connected properly.
   - Push the clips into place securely.
   - Do the power window control unit reset procedure (see page 22-148).
   - Check the window and power door lock operations.

Door Outer Handle Replacement

NOTE: Put on gloves to protect your hands.

1. Raise the glass fully.

2. Remove these items:

   - Door panel (see page 20-5)
   - Plastic cover, as necessary (see page 20-3)

3. Pull the glass run channel (A) away as necessary, and remove the bolt, then remove the rear lower channel (B) by pulling it downward.

Fastener Location

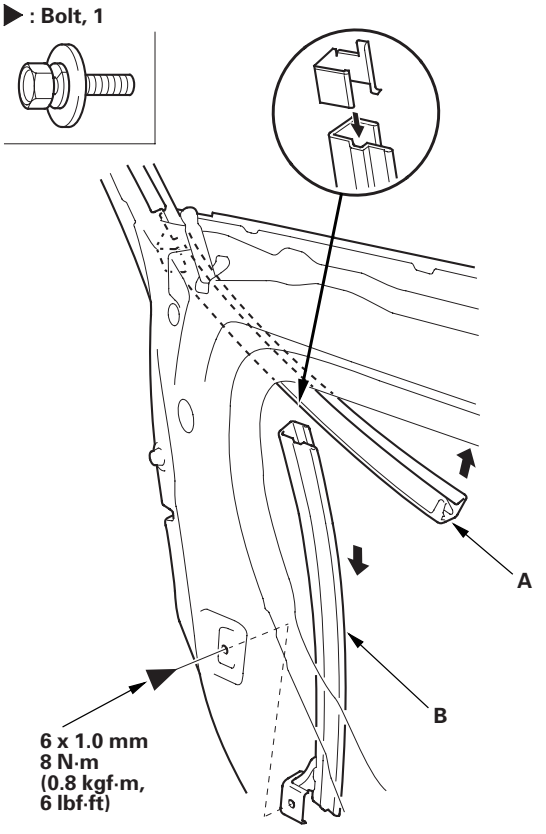

4. ’02-05 models: Remove the clip, and release the lock rod protector (A) from the latch (B) by detaching the clip (C). Lower the protector to release its top portion from the door, then remove it.

Fastener Location

▷ : **Clip, 1**

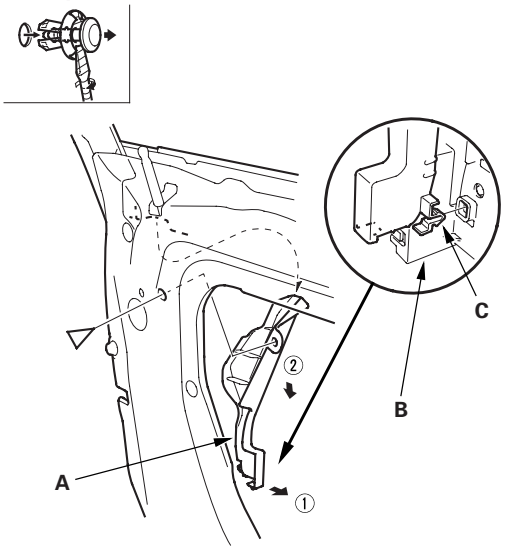

5. Disconnect the outer handle rod (A) from the bushing (B) and cylinder rod (C).

   NOTE: Check the bushing for damage and replace if necessary.

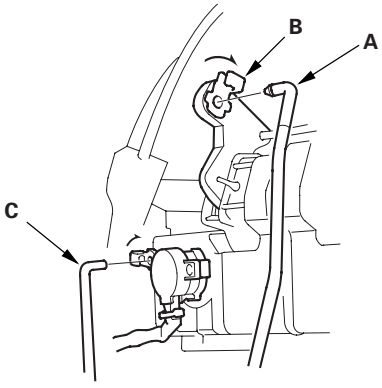

6. Release the retainer clip (A), then remove the lock cylinder (B).

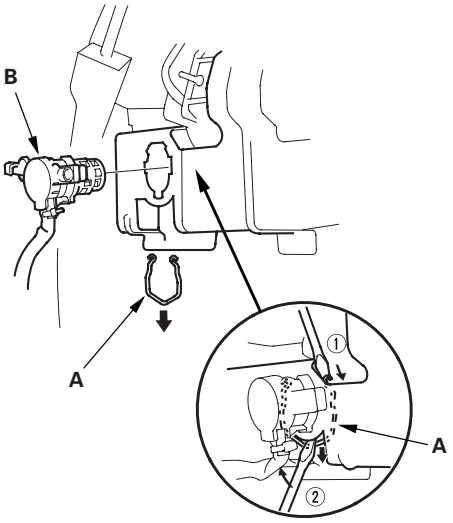

7. Remove the screw, then separate the lock cylinder (A) and cylinder switch (B).

Fastener Location

▶ : **Screw, 1**

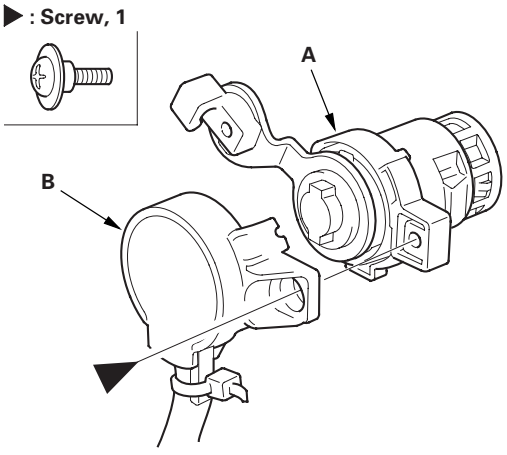

(cont’d)

Door Outer Handle Replacement (cont'd)

8. Disconnect the cylinder switch connector (A), and detach the harness clip (B), then remove the cylinder switch (C).

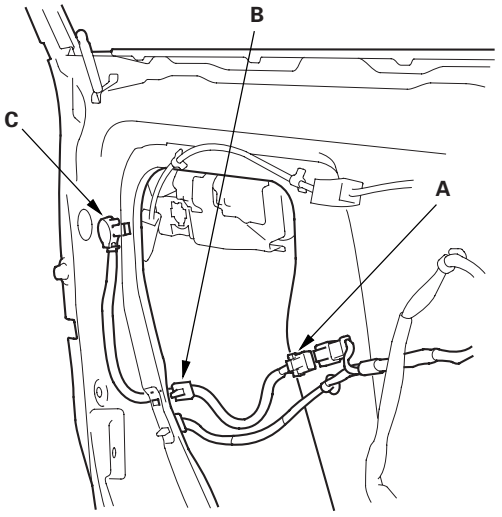

9. Remove the access cap (A). While holding the outer handle (B) from the outside of the door, remove the bolts, then remove the outer handle and outer handle protector (C).

Fastener Locations

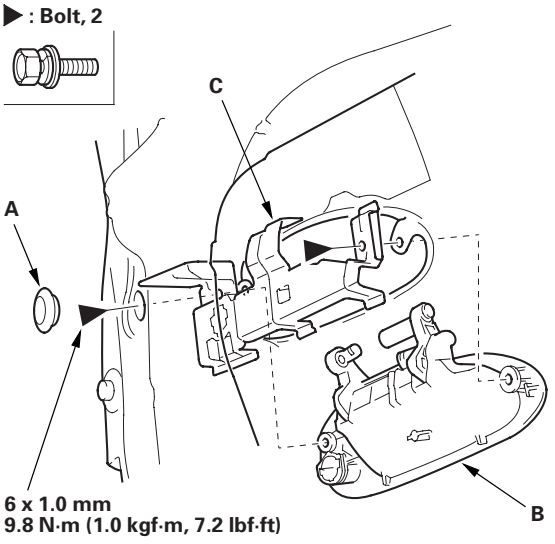

10. Install the handle in the reverse order of removal, and note these items:

- Make sure the cylinder switch harness (A) is routed properly.
- Make sure the cylinder switch connector is plugged in properly, and each rod is connected securely.
- Make sure the lock cylinder switch is engaged to the lock cylinder correctly.
- Make sure the door locks and opens properly.
- When installing the lock cylinder, leave the outer door handle bolts loose so the inner protector does not interfere with the lock cylinder installation, then tighten the handle bolts.
- Install the lock cylinder retaining clip on the handle, then install the lock cylinder. Be sure the clip is fully seated in the slot on the lock cylinder.
- When reinstalling the door panel, make sure the plastic cover is installed properly and sealed around its perimeter.

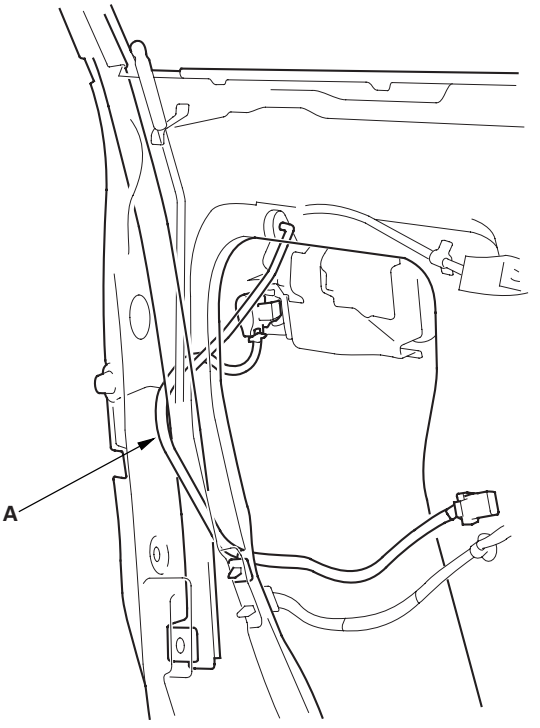

Door Latch Replacement

NOTE: Put on gloves to protect your hands.

1. Raise the glass fully.

2. Remove these items:

   - Door panel (see page 20-5)
   - Plastic cover, as necessary (see page 20-3)
   - Rear lower channel (see step 3 on page 20-6)
   - Lock rod protector, '02-05 models (see step 4 on page 20-7)

3. Disconnect the cylinder rod from the lock cylinder, and disconnect the outer handle rod from the outer handle (see step 5 on page 20-7).

4. Release the inner handle cable (A) from the inner handle bracket (B), and using a clip remover, detach the cable clips (C) from the door.

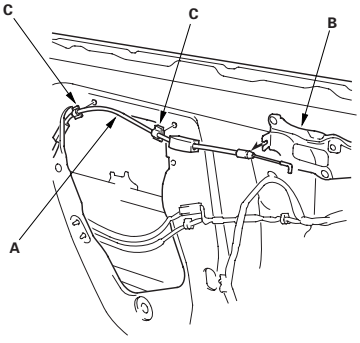

5. Disconnect the actuator connectors (A), and remove the screws, then remove the latch (B) through the hole in the door. Take care not to bend the outer handle rod (C), cylinder rod (D), lock rod (E), and inner handle cable (F).

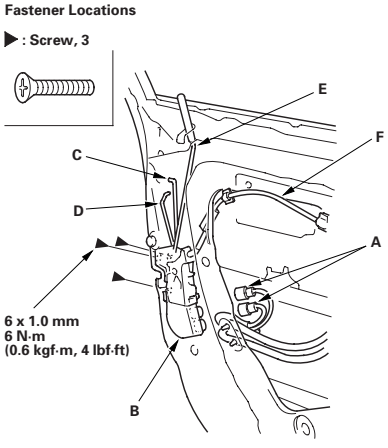

6. For '06 model: Remove the screws, then remove the upper cover (A). Remove the base cover (B) by release the hook (C) and pulling it from the latch (D).

   Note these items during reassembly:
   - Before installing the covers, apply Multitemp SA grease or equivalent to the pivot (E) on the latch lever.
   - Make sure the AFT seal (F) of the inner handle cable is installed in the covers securely.

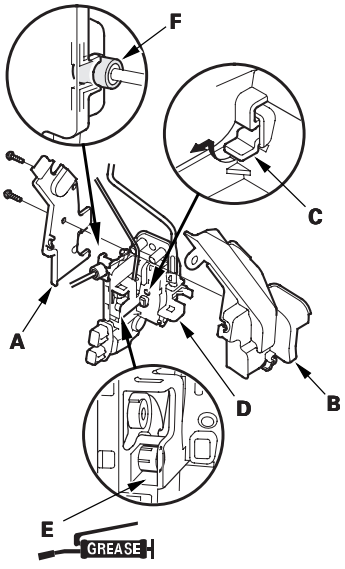

7. If necessary, disconnect the inner handle cable (A) from the latch (B) and bushing (C).
   For '06 model: Replace the AFT seal (D) if necessary.

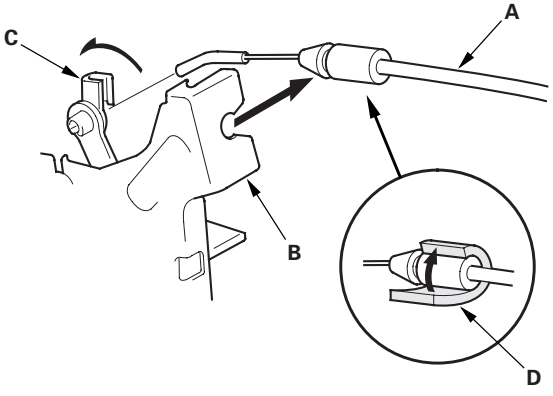

(cont'd)

Door Latch Replacement (cont'd)

8. Install the latch in the reverse order of removal, and note these items:

   - Make sure the actuator connectors are plugged in properly, and each rod and cable are connected securely.
   - Make sure the door locks and opens properly.
   - When reinstalling the door panel, make sure the plastic cover is installed properly and sealed around its perimeter.
   - For '06 model: Peel off the old AFT seal on the covers if necessary. Clean the surface and the edges of the covers with alcohol where new adhesive is to be applied. Attach the new AFT seals (A) to the edges and surface of the covers as shown.

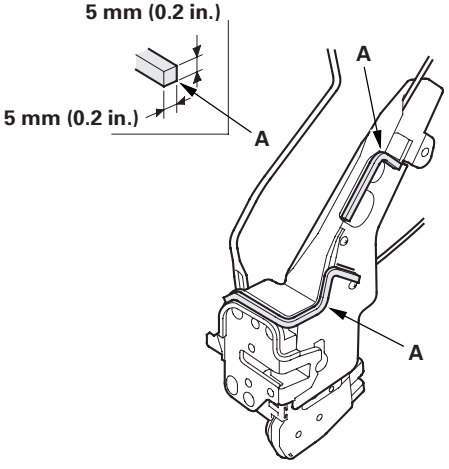

Door Glass and Regulator Replacement

NOTE: Put on gloves to protect your hands.

1. Remove these items:

   - Door panel (see page 20-5)
   - Plastic cover, as necessary (see page 20-3)

2. Carefully raise the glass (A) until you can see the bolts, then remove them. Carefully pull the glass out through the window slot. Take care not to drop the glass inside the door.

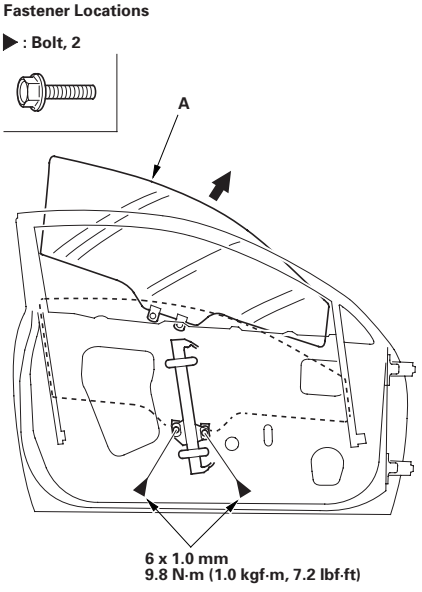

3. Disconnect and detach the connector (A) and harness clip (B) from the door.

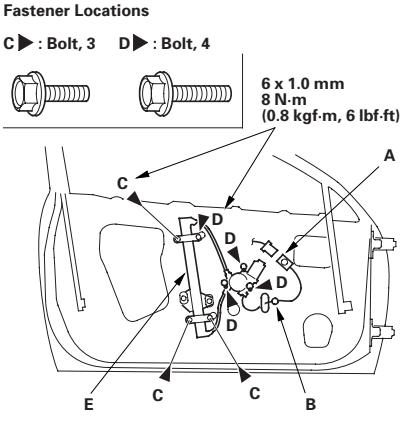

4. Remove the bolts (C), and loosen the bolts (D), then remove the regulator (E) through the hole in the door.

5. Apply multipurpose grease to all the sliding surfaces of the regulator (A) where shown.

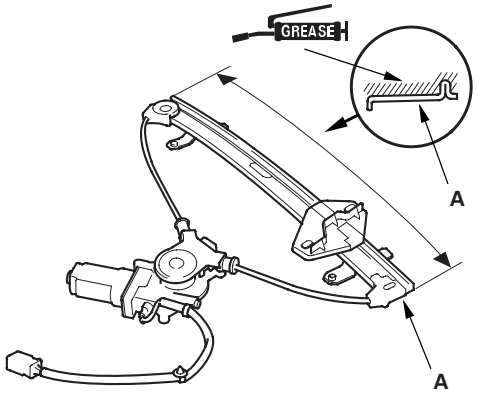

6. Install the glass and regulator in the reverse order of removal, and note these items:

   - Make sure the motor connector is plugged in properly.
   - Roll the glass up and down to see if it moves freely without binding.
   - Make sure that there is no clearance between the glass and glass run channel when the glass is closed.
   - Adjust the position of the glass as necessary (see page 20-13).
   - Check for water leaks (see step 7 on page 20-14).
   - Do the power window control unit reset procedure (see page 22-148).
   - Test-drive and check for wind noise and rattles.
   - When reinstalling the door panel, make sure the plastic cover is installed properly and sealed around its perimeter.

Door Sash Trim Replacement

NOTE: Take care not to scratch the door.

1. Remove the power mirror, as necessary (see page 20-17), and slide the door glass outer weatherstrip forward, as necessary (see page 20-12).

2. Pull back the door weatherstrip (A) at the rear upper corner, and remove the screw.

   Adhesive tape: Thickness 1.2 mm (0.047 in.)

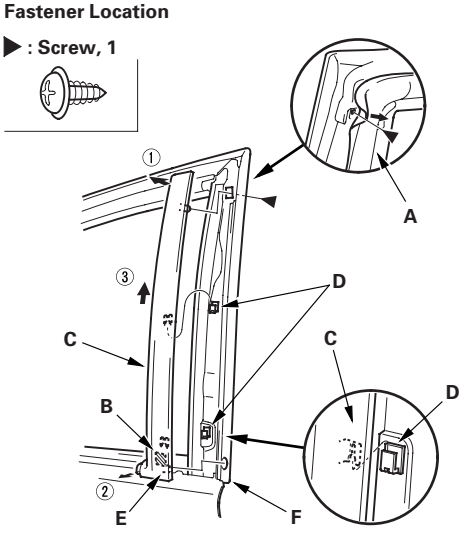

3. Using a utility knife, carefully cut the double-sided adhesive tape (B) at the bottom of the door sash trim (C).

4. Pull up the trim to release it from the clips (D), then remove the trim.

5. Install the trim in the reverse order of removal, and note these items:

   - Replace any damaged or stress-whitened clips.
   - If the old trim will be reinstalled, scrape off the remaining double-sided adhesive tape from the trim, then clean trim surface with a sponge dampened in alcohol where adhesive tape will be applied. Apply the double-sided adhesive tape to the trim.
   - Before installing the trim, clean the door bonding surface with a sponge dampened in alcohol.
   - Before installing the trim, peel the adhesive backing from the double-sided adhesive tape. After installing the trim, push the trim into place securely.
   - Make sure the bottom pin (E) of the trim is installed in the hole of the upper seal (F) securely.

Door Glass Outer Weatherstrip Replacement

NOTE:
- Put on gloves to protect your hands.
- Take care not to scratch the door.

1. Remove the power mirror, as necessary (see page 20-17).

2. Starting at the front, pry the door glass outer weatherstrip (A) up to detach the clips (B) and release the weatherstrip from the door sash trim (C), then remove the weatherstrip.

Fastener Locations

B ▷ : Clip, 5

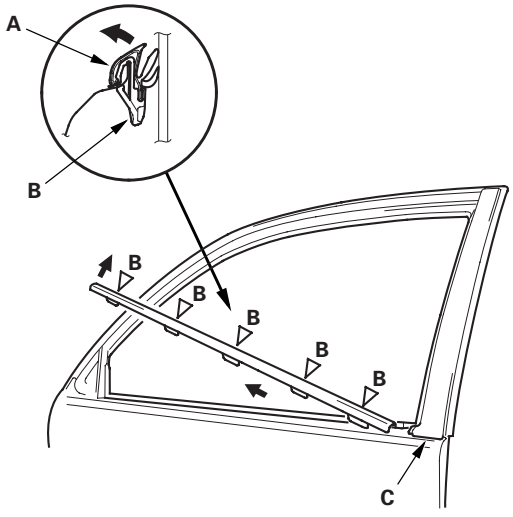

3. Install the weatherstrip in the reverse order of removal, and replace any damaged or stress-whitenings clips.

Door Weatherstrip Replacement

NOTE:
- Take care not to scratch the door.
- Use a clip remover to remove the clips.

1. At the A-pillar, remove the door checker mounting bolt (A).

Fastener Locations

A ▶ : Bolt, 1 B ▷ : Clip, 21

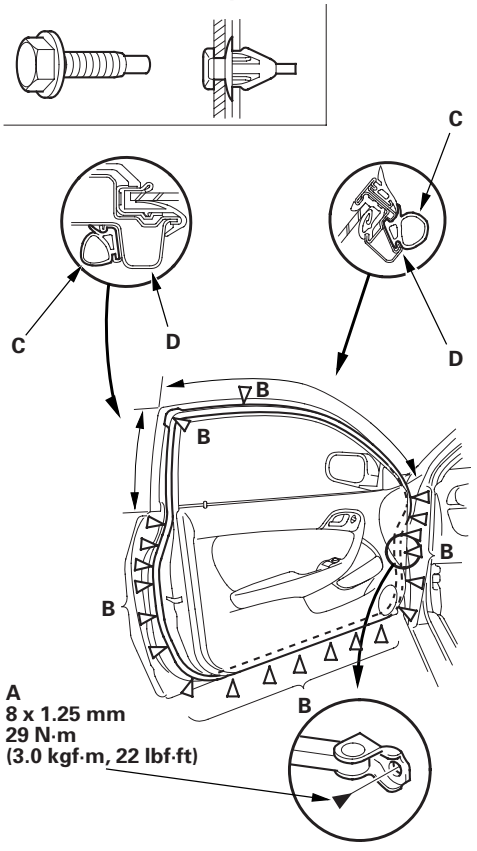

2. Detach the clips (B), then remove the door weatherstrip (C).

3. Install the weatherstrip in the reverse order of removal, and note these items:

   - Replace any damaged or stress-whitened clips.
   - Make sure the weatherstrip is installed in the holder (D) securely.
   - Apply liquid thread lock to door checker mounting bolt before installation.
   - Check for water leaks (see step 7 on page 20-14).
   - Test-drive and check for wind noise.

Door Upper Seal Replacement

NOTE:
- Take care not to scratch the door.
- Use a clip remover to remove the clips.

1. Remove these items:

   - Power mirror, as necessary (see page 20-17)
   - Door sash trim (see page 20-11)

2. Remove the door upper seal (A).

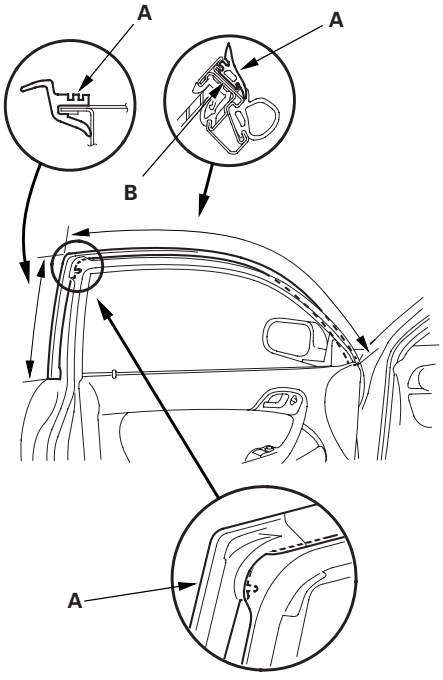

3. Install the seal in the reverse order of removal, and note these items:

   - Make sure the upper seal is installed in the holder (B) securely.
   - Check for water leaks (see step 7 on page 20-14).

Door Glass Adjustment

NOTE:
- Check the weatherstrips and glass run channel for damage or deterioration, and replace them if necessary.
- Wipe the run channel clean with a shop towel.
- Lubricate the run channel with Shin-Etsu grease P/N 08798-9013.

1. Place the vehicle on a firm, level surface.

2. Remove these items:

   - Door panel (see page 20-5)
   - Plastic cover (see page 20-3)

3. Carefully move the glass (A) until you can see the glass mounting bolts (B), then loosen them.

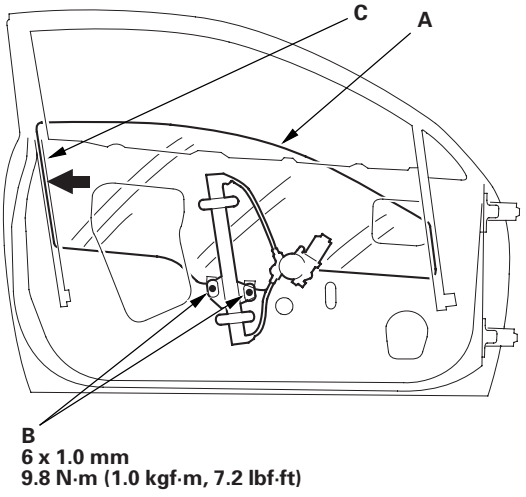

4. Push the glass against the channel (C), then tighten the glass mounting bolts.

5. Check that the glass moves smoothly.

(cont'd)

Door Glass Adjustment (cont'd)

6. Raise the glass fully, and check for gaps. Check that the glass (A) contacts the glass run channel (B) evenly.

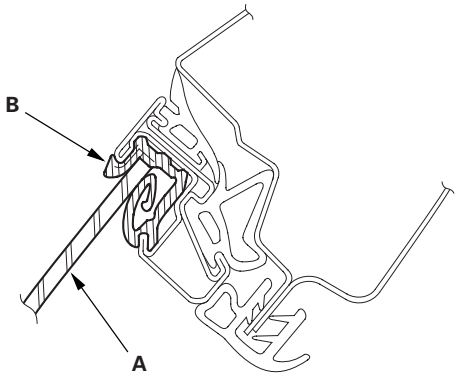

7. Check for water leaks. Run water over the roof and on the sealing area as shown, and note these items:

   - Use a 12 mm (1/2 in.) diameter hose (A).
   - Adjust the rate of water flow as shown (B).
   - Do not use a nozzle.
   - Hold the hose about 300 mm (12 in.) away from the door (C).

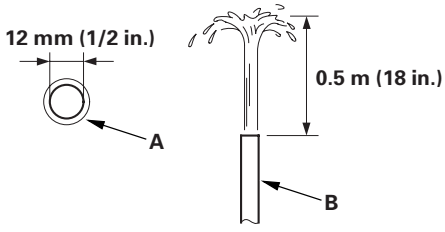

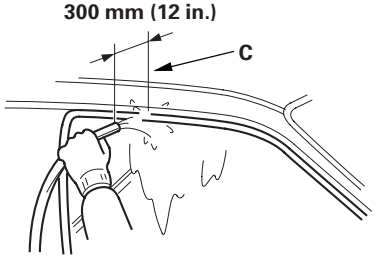

8. Attach the plastic cover, and install the door panel (see page 20-5).

9. Test-drive and check for wind noise.

Door Position Adjustment

NOTE: Check for a flush fit with the body, then check for equal gaps between the front, rear, and bottom door edges and the body. Check that the door and body edges are parallel.

1. Place the vehicle on a firm, level surface when adjusting the door.

2. Adjust at the hinges (A):

   - Remove the front inner fender (see page 20-111) and front fender fairing (see page 20-112). Loosen the hinge mounting bolts (B) slightly, and move the door backward or forward, up or down as necessary to equalize the gaps.
   - Place a shop towel (C) on the jack (D) to prevent damage to the door when adjusting the door.

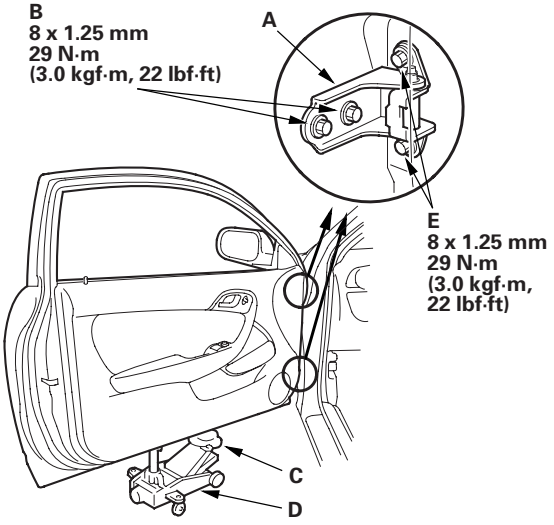

3. If necessary, replace the door mounting bolts with the adjusting bolts (P/N 90102-SFA-305) made specifically for door adjustment, then adjust at the door. Loosen the door mounting bolts (E) slightly, and move the door up or down as necessary to equalize the gaps, and in or out until it's flush with the body.

4. Check that the door and body edges are parallel. If necessary, adjust the door cushions (A) to make the rear of the door flush with the body.

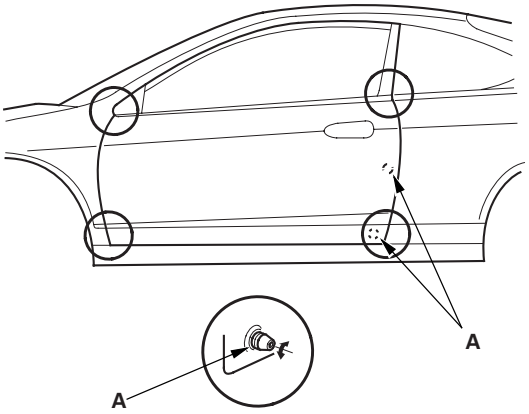

5. Apply touch-up paint to the hinge mounting bolts and around the hinges.

6. Check for water leaks (see step 7 on page 20-14).

7. Reinstall all remaining removed parts.

8. Test-drive and check for wind noise.

Door Striker Adjustment

Make sure the door latches securely without slamming it. If necessary, adjust the striker (A): The striker nuts are fixed, but the striker can be adjusted slightly up or down, and in or out.

1. Loosen the screws (B), then insert a shop towel (C) between the body and striker.

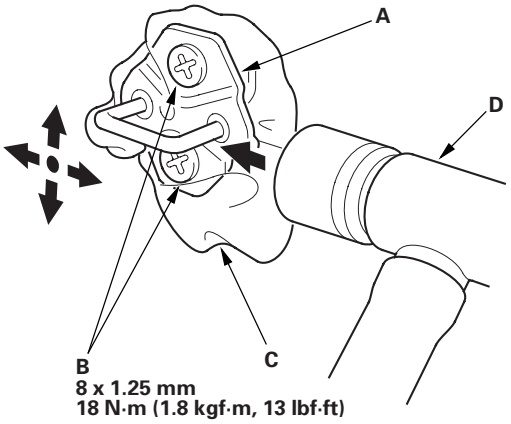

2. Lightly tighten the screws.

3. Wrap the striker with a shop towel, then adjust the striker by tapping it with a plastic hammer (D). Do not tap the striker too hard.

4. Loosen the screws, and remove the shop towel.

5. Lightly tighten the screws.

6. Hold the outer handle out, and push the door against the body to be sure the striker allows a flush fit. If the door latches properly, tighten the screws and recheck.

Component Location Index

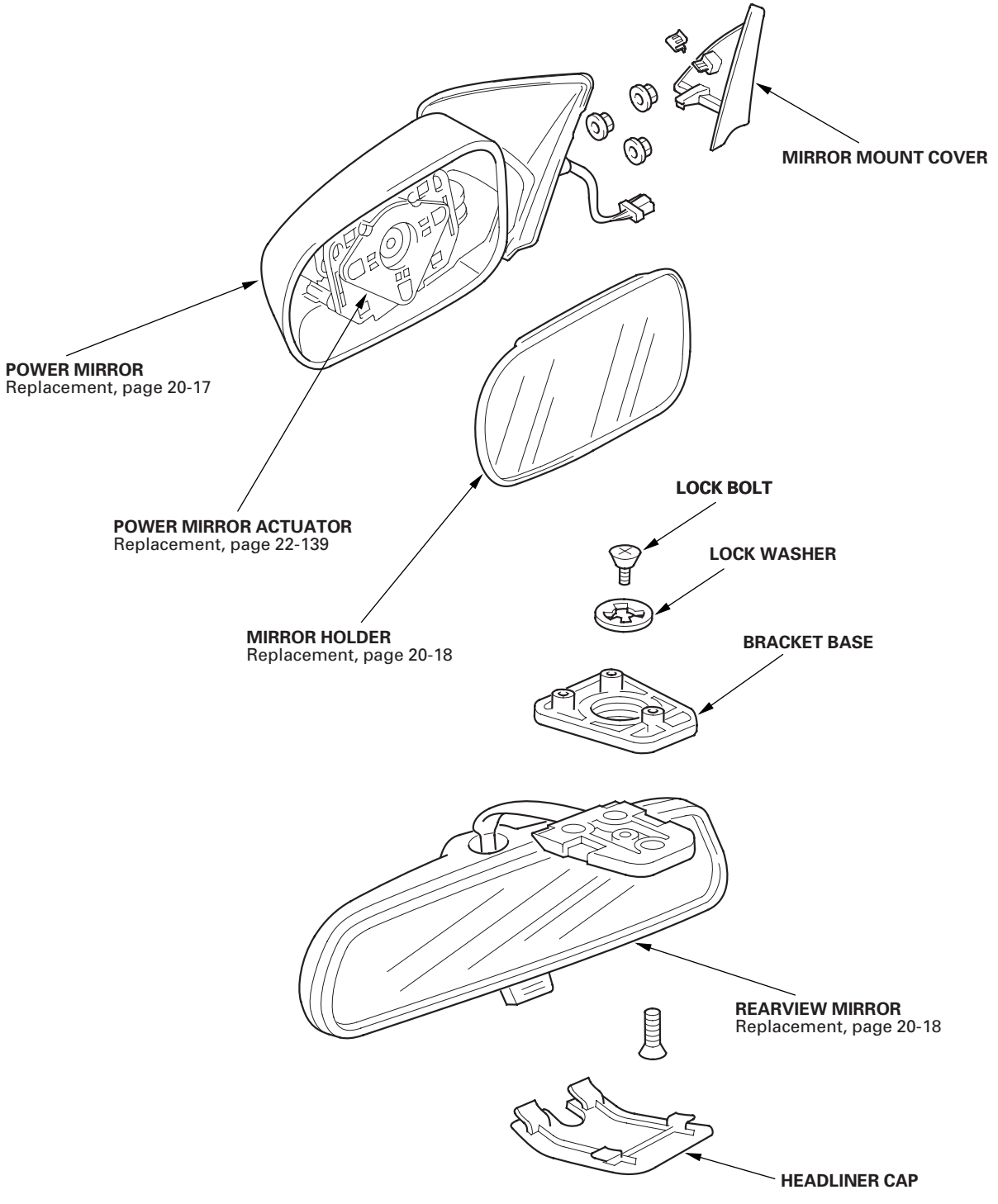

Power Mirror Replacement

1. Lower the door glass fully.

2. Carefully pry out the mirror mount cover (A) by hand in the sequence shown.

Fastener Location

▷ : Clip, 1

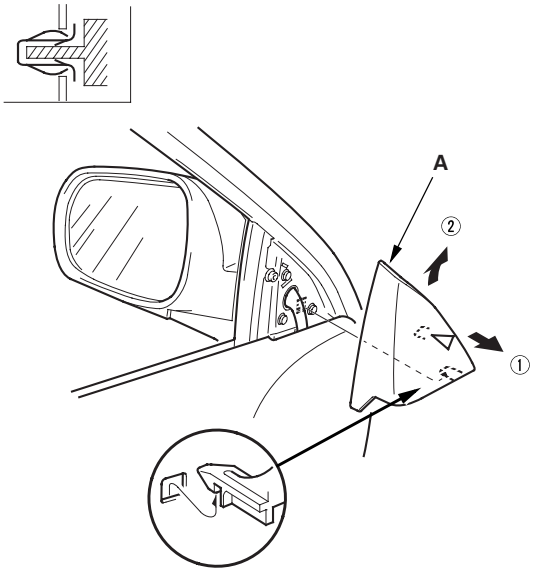

3. Remove the door panel (see page 20-5).

4. Disconnect the connector (A). While holding the mirror (B), remove the nuts, then remove the mirror. Take care not to scratch the door.

Fastener Locations

● : Nut, 3

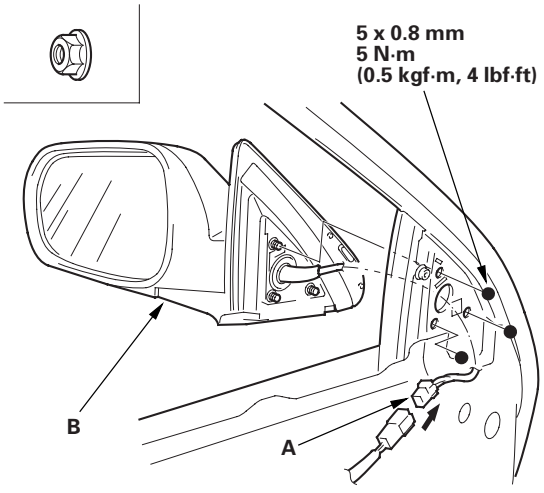

5. Install the mirror in the reverse order of removal, and make sure the connector is plugged in properly.

Mirror Holder Replacement

NOTE: Put on gloves to protect your hands.

1. Carefully push on the top edge of the mirror holder (A) by hand.

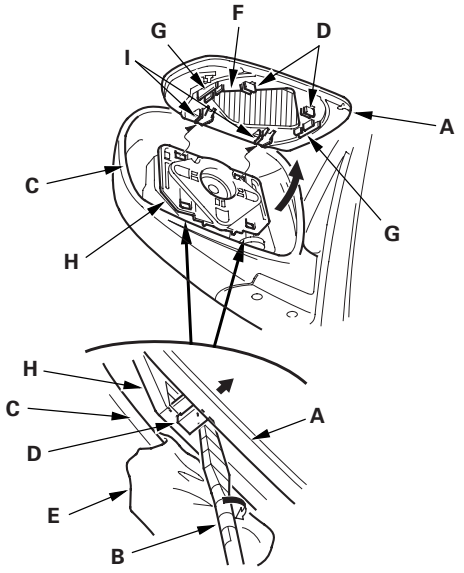

2. Insert a flat-tip screwdriver (B) wrapped with protective tape between the mirror holder and mirror housing (C), and detach the bottom clips (D). Put a shop towel (E) on the opening edge of the mirror housing to prevent damage. Take care not to scratch the mirror housing.

3. Carefully pull out the bottom edge of the mirror holder, then separate the adhesive (F), and release the side clips (G).

4. Separate the mirror holder from the actuator (H) by releasing the hooks (I). If equipped, disconnect the mirror defogger connectors from the heater pad terminals.

5. If equipped, reconnect the mirror defogger connectors.

6. Reattach the hooks of the mirror holder to the actuator, then position the mirror holder on the actuator. Carefully push on the clip portions of the mirror holder until the mirror holder locks into place.

7. Check the operation of the actuator.

Rearview Mirror Replacement

Special Tools Required
KTC trim tool set SOJATP2014

NOTE: Use the appropriate tool from the KTC trim tool set to avoid damage when prying components.

1. Using a trim tool, carefully remove the headliner cap (A) by releasing the hooks (B). Take care not to scratch the cap and headliner (C).

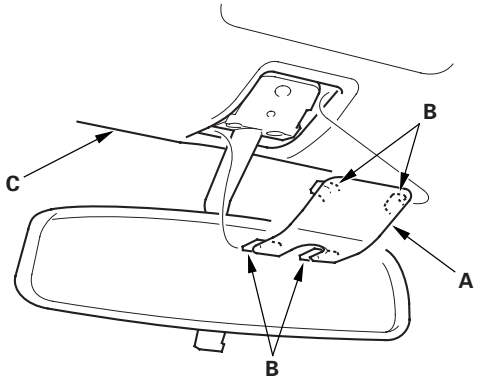

2. Remove the screws, then remove the rearview mirror (A).

Fastener Locations

▶ : Screw, 3

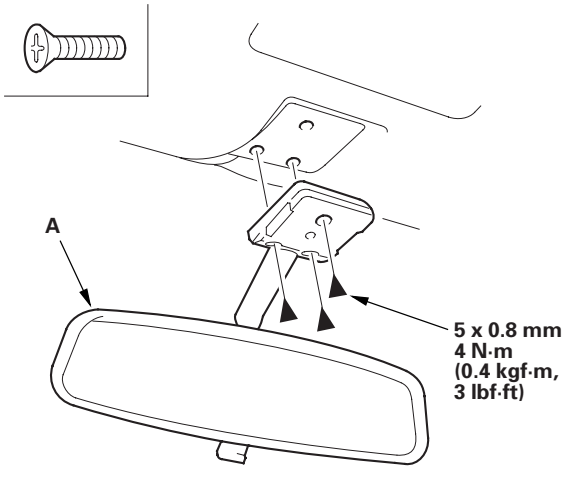

3. Install the mirror in the reverse order of removal.

Component Location Index

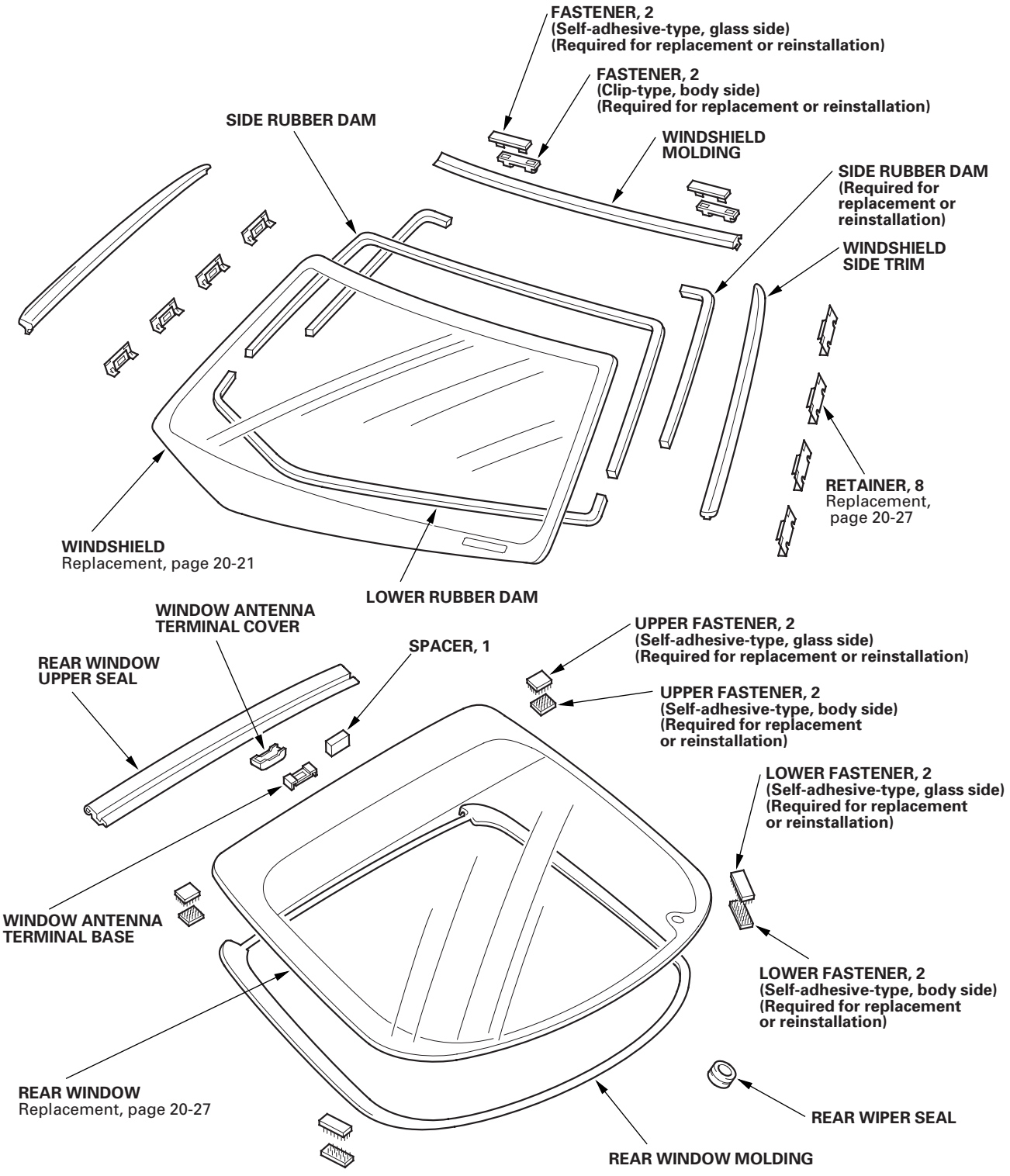

(cont'd)

Component Location Index (cont'd)

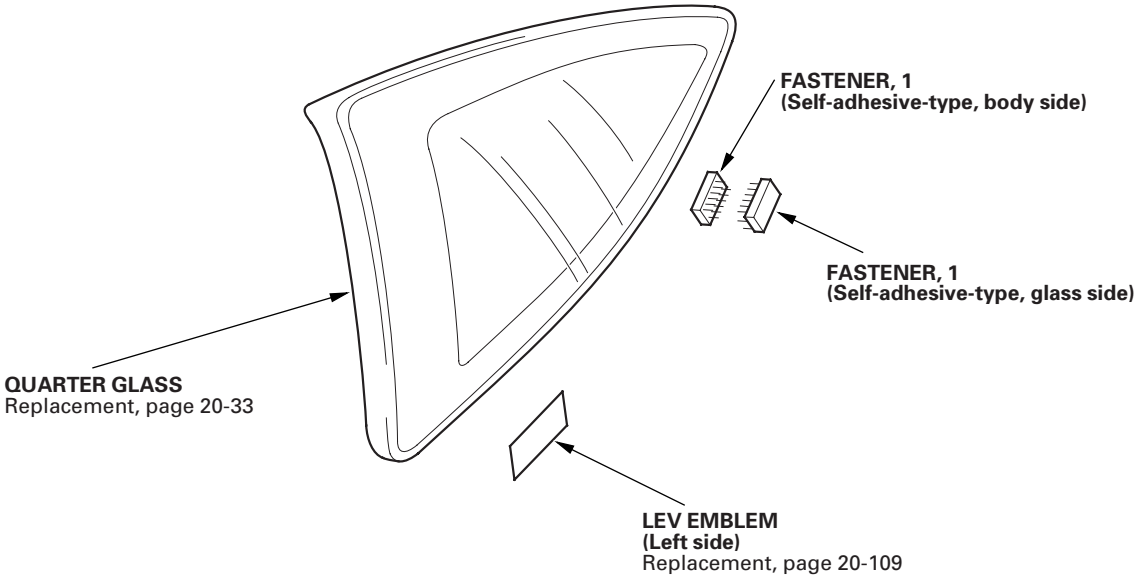

Windshield Replacement

Special Tools Required
KTC trim tool set SOJATP2014

NOTE:
- Put on gloves to protect your hands.
- Use the appropriate tool from the KTC trim tool set to avoid damage when prying components.
- Wear eye protection when removing the glass with piano wire.
- Use seat covers to avoid damaging the seats.

1. Pull up the side trim (A) to release the clips (B, C) from the retainers (D), then remove the trim from each side of the windshield.

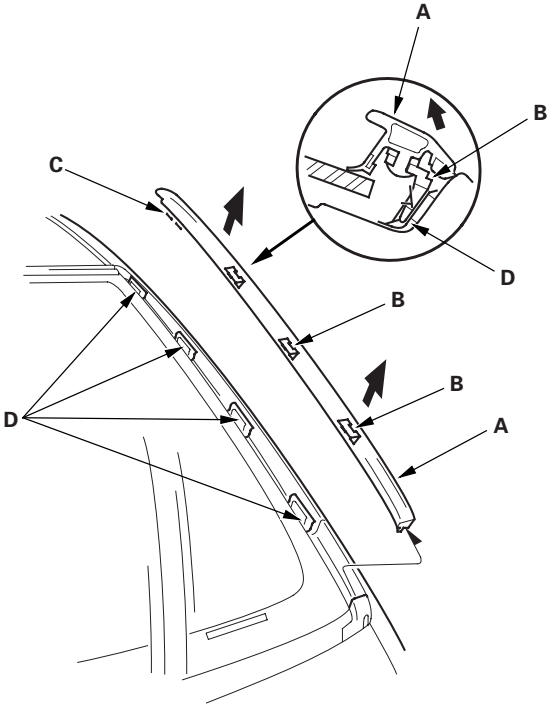

2. Remove these items:

   - Windshield wiper arms (see page 22-158)
   - Cowl covers (see page 20-105)

3. Remove the molding (A) from the upper edge of the windshield (B). If necessary, cut the molding with a utility knife.

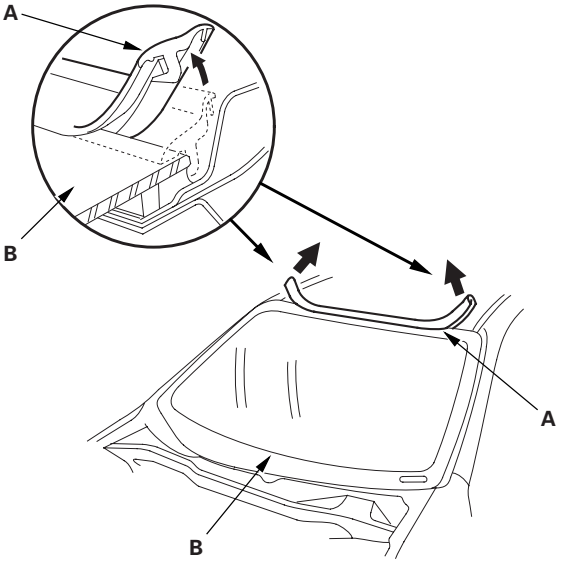

4. If the old windshield will be reinstalled, make alignment marks across the glass and body with a grease pencil.

5. Pull down the front portion of the headliner (see page 20-55). Take care not to bend the headliner excessively, as you may crease or break it.

6. Apply protective tape along the edge of the dashboard and body. Using an awl, make a hole through the rubber dam and adhesive from inside the vehicle at the corner portion of the windshield. Push a piece of piano wire through the hole, and wrap each end around a piece of wood.

(cont'd)

Windshield Replacement (cont'd)

7. With a helper on the outside, pull the piano wire (A) back and forth in a sawing motion. Hold the piano wire as close to the windshield (B) as possible to prevent damage to the body and dashboard. Carefully cut through the rubber dam and adhesive (C) around the entire windshield.

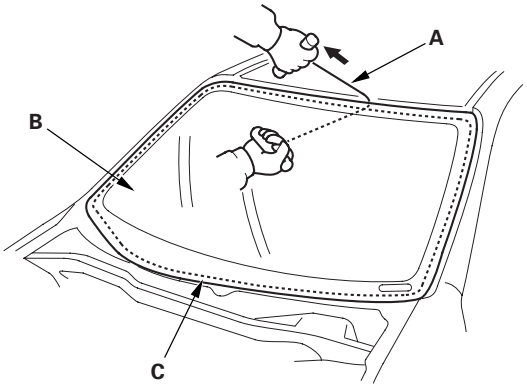

Cutting portions

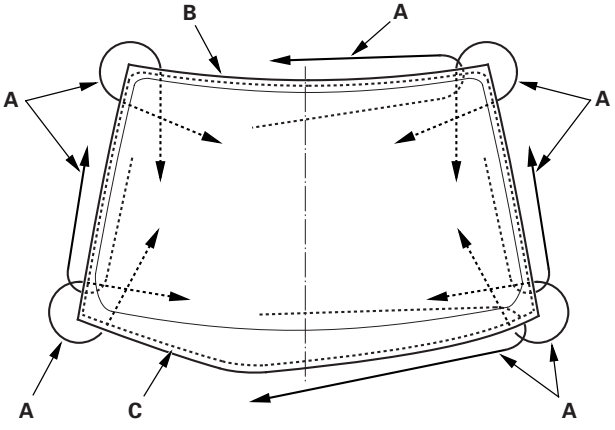

8. Carefully remove the windshield.

9. With a knife, scrape the old adhesive smooth to a thickness of about 2 mm (0.08 in.) on the bonding surface around the entire windshield opening flange:

   - Do not scrape down to the painted surface of the body; damaged paint will interfere with proper bonding.
   - Remove the rubber dam, clips, and fasteners from the body.

10. Clean the body bonding surface with a sponge dampened in alcohol. After cleaning, keep oil, grease, and water from getting on the clean surface.

11. If the old windshield will be reinstalled, use a putty knife to scrape off all of the old adhesive, the fasteners, the clips, and the rubber dam from the windshield. Clean the inside face and the edge of the windshield with alcohol where new adhesive will be applied. Make sure the bonding surface is kept free of water, oil, and grease.

12. Attach the side rubber dams (A), the lower rubber dam (B), and the fasteners (C) with adhesive tape to the inside face of the windshield (D) as shown:

- Be sure the rubber dams and fasteners line up with the alignment marks (E).
- Be careful not to touch the windshield where adhesive will be applied.

Side and lower rubber dams adhesive tape:
Thickness 0.16 mm (0.0063 in.)
Width 4 mm (0.16 in.)
Fasteners adhesive tape:
Thickness 0.4 mm (0.016 in.)
Width 7.5 mm (0.3 in.)

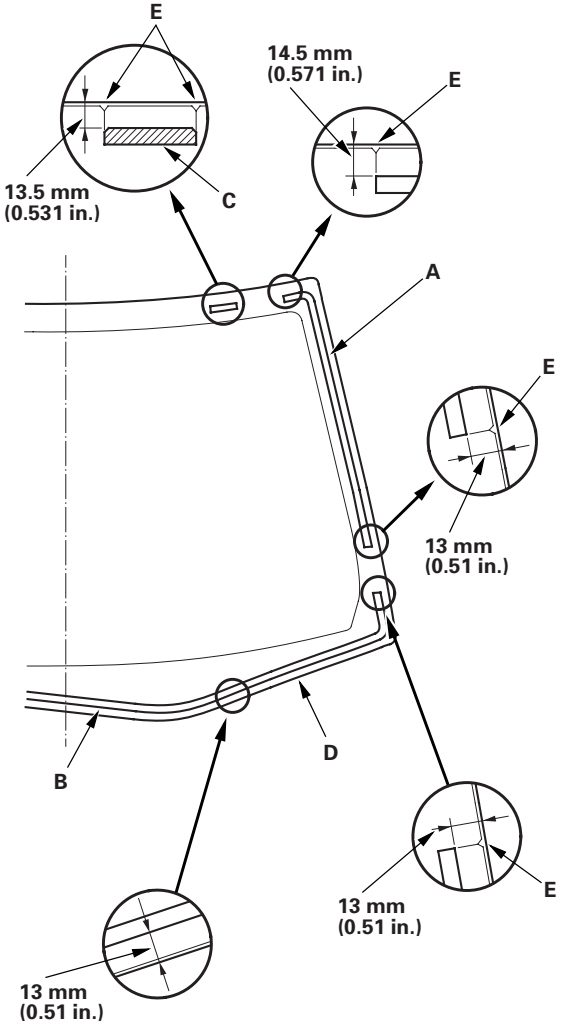

13. Attach the molding (A) with adhesive tape (B) to the corner edge of the windshield (C). Be careful not to touch the windshield where adhesive will be applied.

Adhesive tape: Thickness 0.8 mm (0.031 in.)
Width 4 mm (0.16 in.)

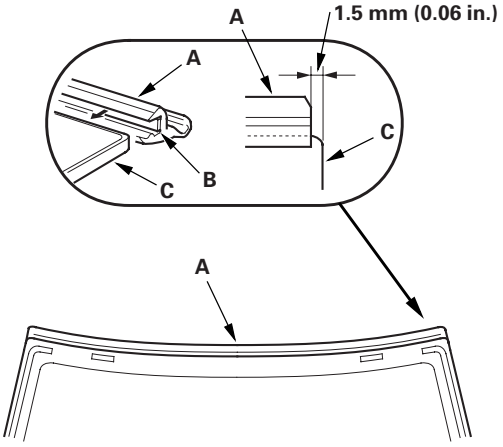

14. Attach the fasteners to the body with adhesive tape.

Adhesive tape: Thickness 0.4 mm (0.016 in.)
Width 5 mm (0.2 in.)

Fastener Locations

▷ : **Fastener, 2**

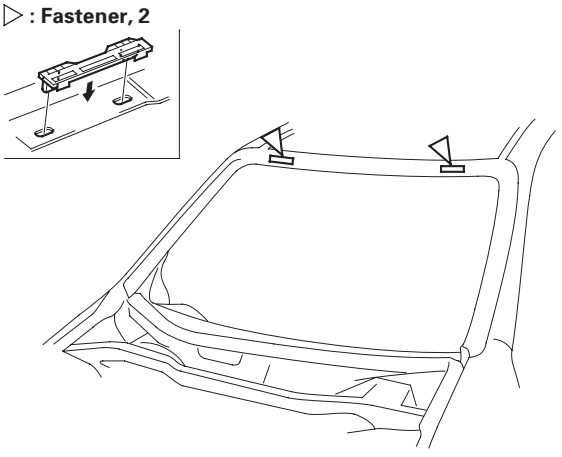

(cont'd)

Windshield Replacement (cont'd)

15. Set the windshield in the opening, and center it. Make alignment marks (A) across the windshield and body with a grease pencil at the four points shown. Be careful not to touch the windshield where adhesive will be applied.

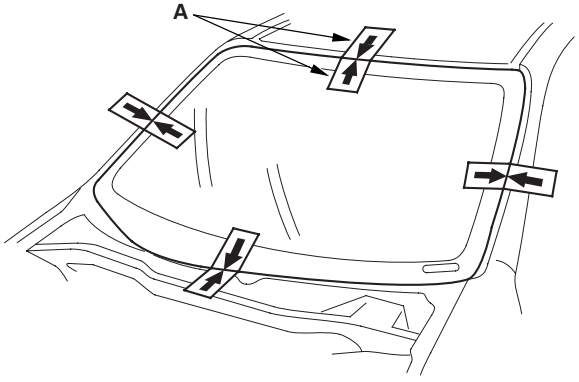

16. Remove the windshield.

17. With a sponge, apply a light coat of glass primer around the edge of the windshield (A) between the dams (B) and molding (C) as shown, then lightly wipe it off with gauze or cheesecloth:

- Apply glass primer to the molding.
- Do not apply body primer to the windshield, and do not get body and glass primer sponges mixed up.
- Never touch the primed surfaces with your hands. If you do, the adhesive may not bond to the windshield properly, causing a leak after the windshield is installed.
- Keep water, dust, and abrasive materials away from the primed surfaces.

: **Apply glass primer here.**

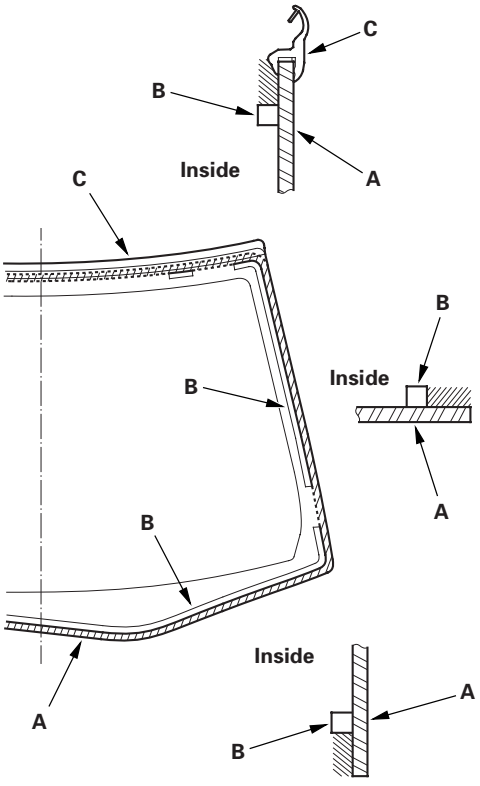

18. With a sponge, carefully apply a light coat of body primer to any exposed paint around the flange where new adhesive will be applied. Let the primer dry for at least 10 minutes:

    - Do NOT apply body primer to any remaining original adhesive on the flange.
    - Be careful not to mix up the body and glass primer sponges.
    - Never touch the primed surface with your hands.

    : Apply body primer to exposed paint as shown.

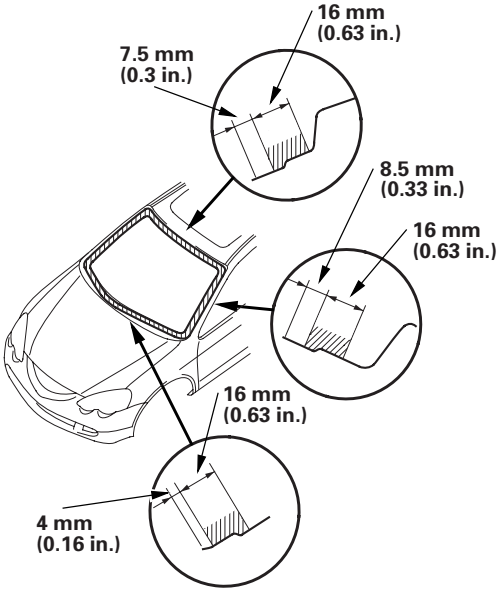

19. Cut a ''V'' in the end of the nozzle (A) on the adhesive cartridge as shown.

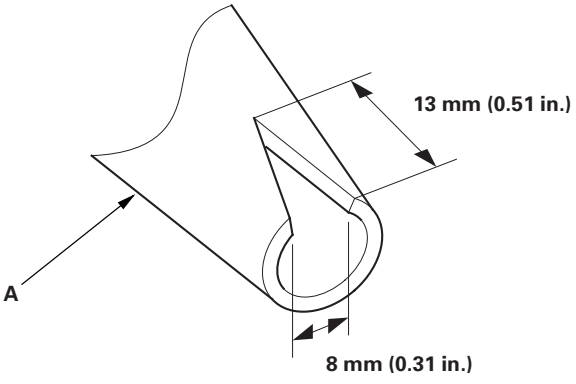

20. Put the cartridge in a caulking gun, and run a bead of adhesive (A) around the edge of the windshield (B) between the dams (C) and molding (D) as shown. Apply the adhesive within 30 minutes after applying the glass primer. Make a slightly thicker bead at each corner.

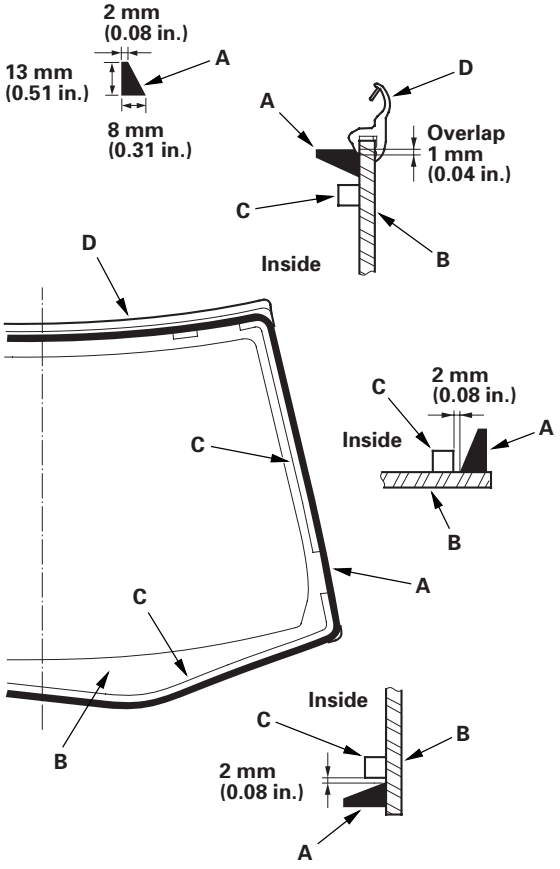

21. Use suction cups to hold the windshield over the opening, align it with the alignment marks made in step 15, and set it down on the adhesive. Lightly push on the windshield until its edges are fully seated on the adhesive all the way around. Do not open or close the doors until the adhesive is dry.

(cont'd)

Windshield Replacement (cont'd)

22. Scrape or wipe the excess adhesive off with a putty knife or towel. To remove adhesive from a painted surface or the windshield, wipe with a soft shop towel dampened with alcohol.

23. Let the adhesive dry for at least 1 hour, then spray water over the windshield and check for leaks. Mark leaking areas, and let the windshield dry, then seal with sealant:

    - Let the vehicle stand for at least 4 hours after windshield installation. If the vehicle has to be used within the first 4 hours, it must be driven slowly.
    - Keep the windshield dry for the first hour after installation.

24. Reinstall the cowl covers.

25. On both sides of the windshield, set the bottom edge of the side molding (A) under the cowl cover (B), and set the hook (C) under the front fender (D), then align the clips (E, F) with the retainers (G). Push on the clip portions of the molding until the molding is fully seated on the windshield.

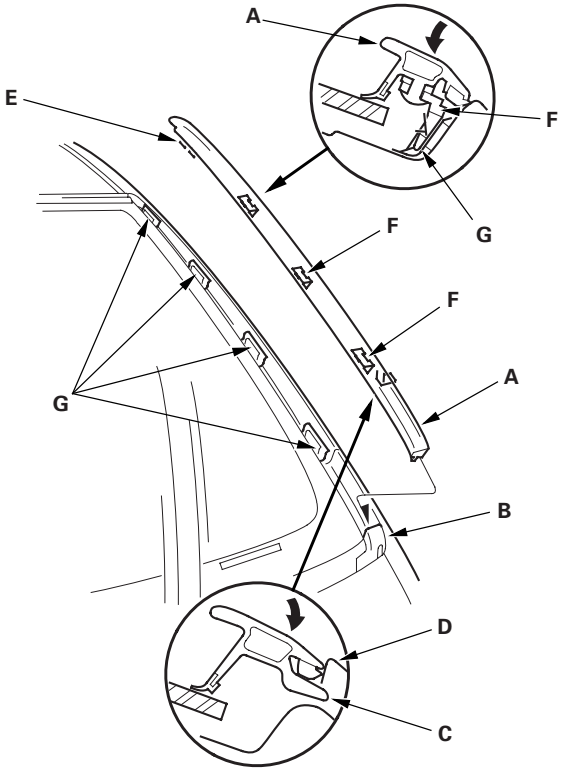

26. Reinstall all remaining removed parts.

    NOTE: Advise the customer not to do the following things for 2 to 3 days:
    - Slam the doors with all the windows rolled up.
    - Twist the body excessively (such as when going in and out of driveways at an angle or driving over rough, uneven roads).

Windshield Side Trim Retainer Replacement

NOTE:
- Take care not to scratch the body.
- When heating the body with a dryer, be careful not to get it too hot. Heat it gradually to prevent damage to the paint.
- Remove the plastic parts, and/or protect them from the hot with aluminum foil.

1. While heating the retainer to 212—248 ℉ (100—120 ℃) with a dryer, gently pull it away from the body with pliers.

2. With a putty knife, scrape the remaining adhesive tape from the bonding surface while heating it with a dryer.

3. Clean the bonding surface with a sponge dampened in alcohol. Make sure the bonding surface is kept free of water, oil and grease.

4. Peel the adhesive backing away from the double-sided adhesive tape on new retainer.

5. Line up the retainers (A) with the alignment marks (B) on the body, and attach the retainers with adhesive tape (C).

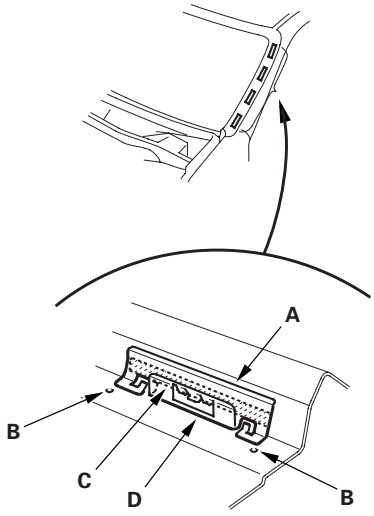

6. Apply two-part epoxy adhesive (D) around the edge of the retainers as shown.

Rear Window Replacement

NOTE:
- Put on gloves to protect your hands.
- Wear eye protection when removing the glass with piano wire.
- Use seat covers to avoid damaging any surfaces.
- Do not damage the rear window defogger grid lines, window antenna grid lines, and terminals.

1. Remove these items:

   - Hatch trim panel (see page 20-54)
   - Rear window wiper motor (see page 22-159)

2. Remove the window antenna terminal cover (A) from the window antenna terminal base (B), and disconnect the window antenna connector (C). Disconnect the rear window defogger connectors (D).

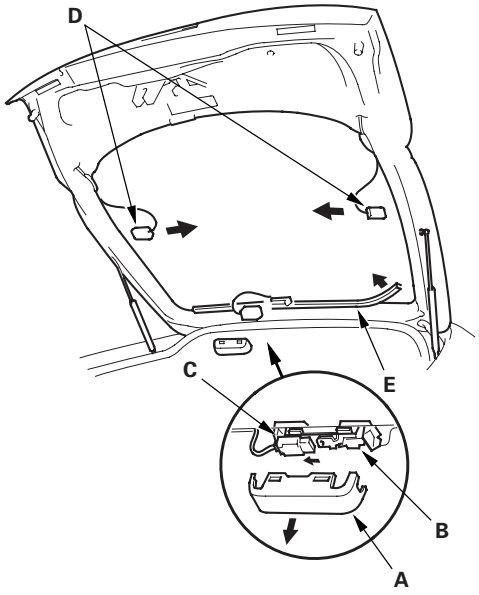

3. Remove the rear window trim (E).

4. If the old rear window will be reinstalled, make alignment marks across the glass and body with a grease pencil.

5. Apply protective tape along the inside and outside edges of the hatch. Using an awl, make a hole through the adhesive from inside the vehicle at the corner portion of the rear window. Push the piano wire through the hole, and wrap each end around a piece of wood.

(cont'd)

Rear Window Replacement (cont'd)

6. With a helper on the outside, pull the piano wire (A) back and forth in a sawing motion. Hold the piano wire as close to the rear window (B) as possible to prevent damage to the hatch, and carefully cut through the adhesive (C) around the entire rear window.

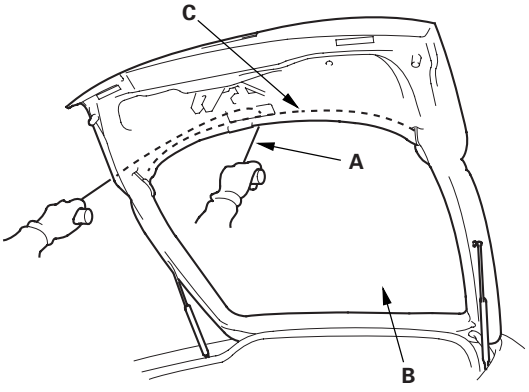

Cutting positions

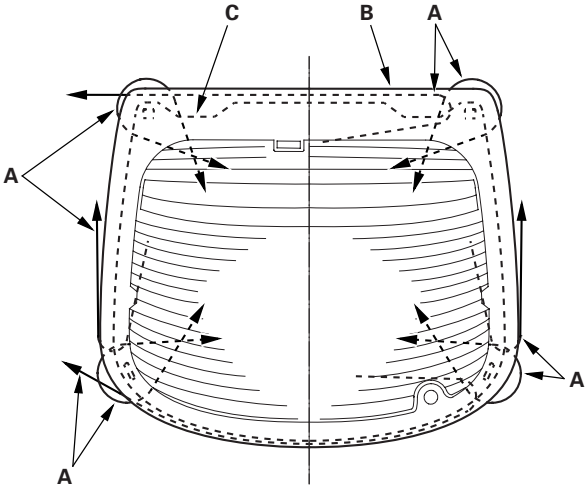

7. Carefully remove the rear window.

8. With a putty knife, scrape the old adhesive smooth to a thickness of about 2 mm (0.08 in.) on the bonding surface around the entire rear window opening flange:

   - Do not scrape down to the painted surface of the body; damaged paint will interfere with proper bonding.
   - Remove the fasteners from the hatch.

9. Clean the hatch bonding surface with a sponge dampened in alcohol. After cleaning, keep oil, grease, and water from getting on the surface.

10. If the old rear window will be reinstalled, use a putty knife to scrape off all of the old adhesive, the fasteners and the rubber dams from the rear window. Clean the inside face and the edge of the rear window with alcohol where new adhesive will be applied. Make sure the bonding surface is kept free of water, oil, and grease.

11. Attach the upper fasteners (A), the lower fasteners (B), and the spacer (C) with adhesive tape to the inside face of the rear window (D) as shown. If necessary, apply primer to the areas where the window antenna terminal base (E) will be attached, then attach the base with adhesive tape:

- Be sure the fasteners and spacer (and window antenna terminal base) line up with the alignment marks (F).
- Be careful not to touch the rear window where adhesive will be applied.

Upper fasteners adhesive tape:
Thickness 1.2 mm (0.047 in.)
Width 20 mm (0.79 in.)
Lower fasteners adhesive tape:
Thickness 0.6 mm (0.024 in.)
Width 7.5 mm (0.3 in.)
Spacer adhesive tape:
Thickness 0.16 mm (0.0063 in.)
Width 7 mm (0.28 in.)
Terminal base adhesive tape:
Thickness 1.2 mm (0.047 in.)

: Apply primer here.

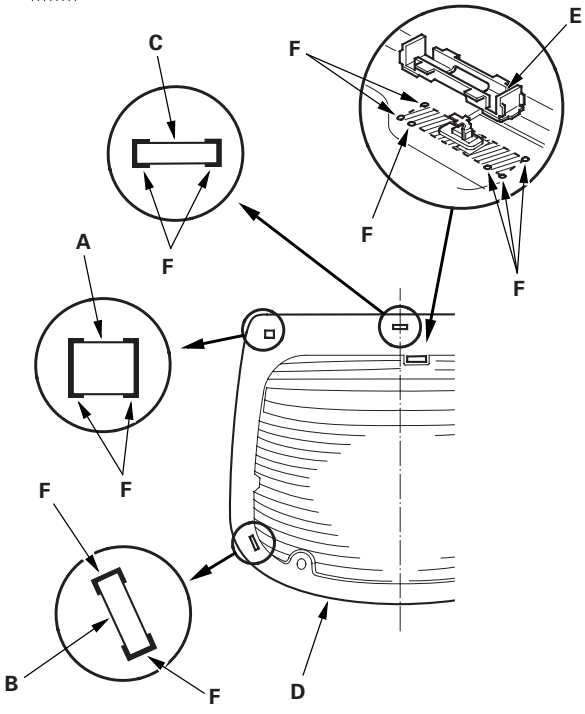

12. Apply primer to the inside face around the entire molding (A), and apply the double-sided adhesive tape (B). Do not peel off the adhesive backing.

Adhesive tape: Thickness 0.2 mm (0.0079 in.)

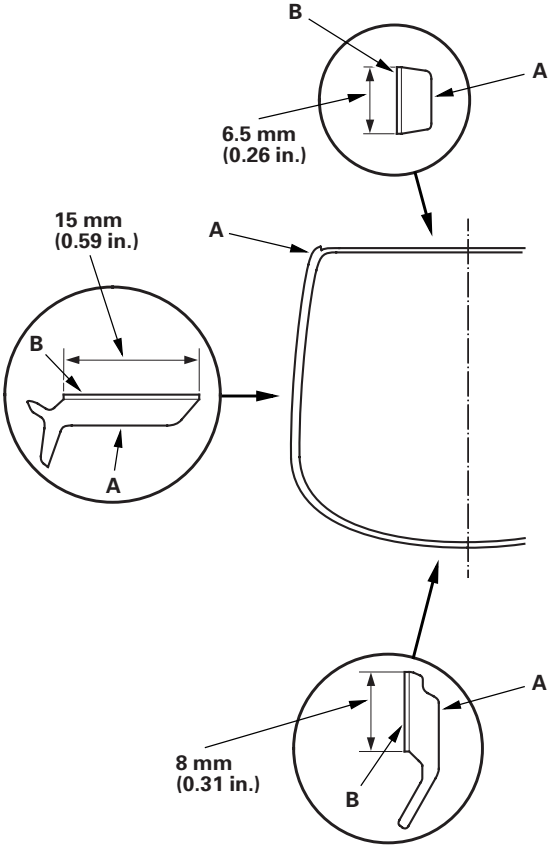

(cont'd)

Rear Window Replacement (cont'd)

13. Apply primer to the inside face of the rear window (A), and attach the molding (B):

    - With the printed dots (C) on the upper and side portions of the rear window as a guide, attach the molding around the edge of the rear window.
    - Before installing the molding, fold the edge of the adhesive backing on the double-sided adhesive tape. After installing the molding, pull the adhesive backing away, then attach the molding into place.
    - Be careful not to touch the rear window where adhesive will be applied.

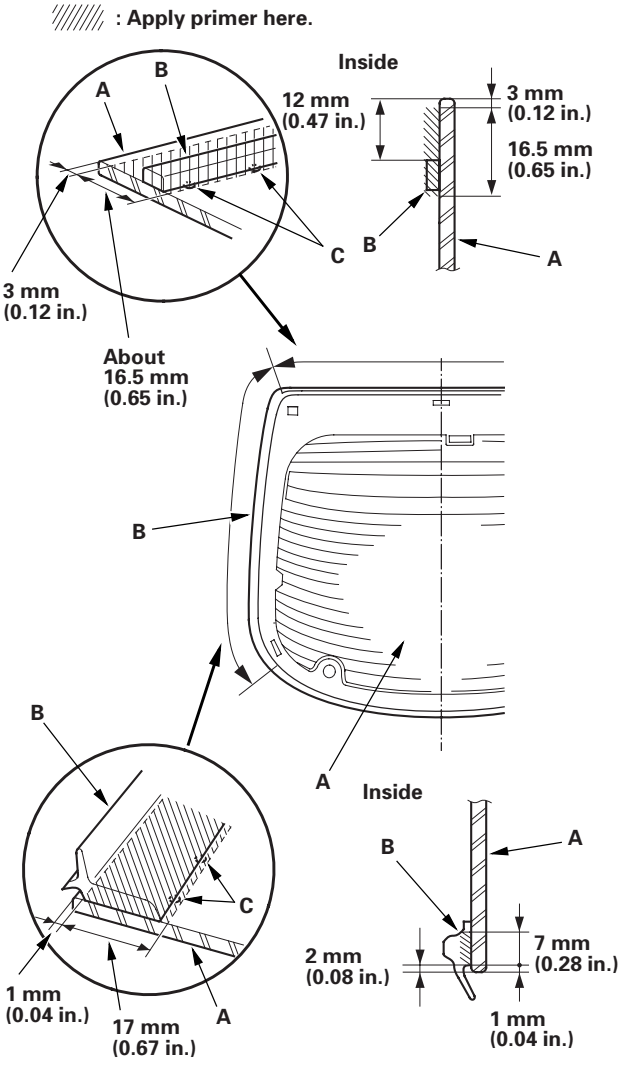

14. Attach the upper seal (A) with adhesive tape (B) onto the upper portion of the molding (C):

    - Be sure the alignment mark (D) of the seal lines up with the alignment mark (E) of the windshield.
    - Be careful not to touch the window where adhesive will be applied.

Adhesive tape: Thickness 0.4 mm (0.016 in.)
Width 8 mm (0.31 in.)

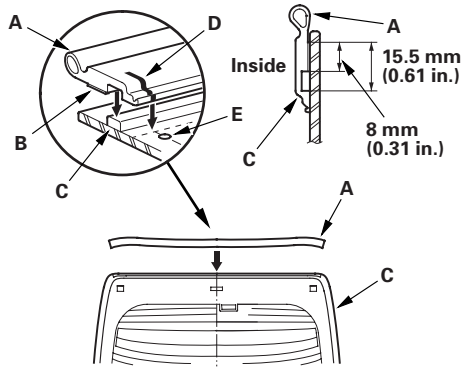

15. Attach the upper fasteners (A) and lower fasteners (B) with adhesive tape to the hatch as shown.

Upper fasteners adhesive tape:
Thickness 1.2 mm (0.047 in.)
Width 20 mm (0.79 in.)
Lower fasteners adhesive tape:
Thickness 0.6 mm (0.024 in.)
Width 9.5 mm (0.37 in.)

Fastener Locations

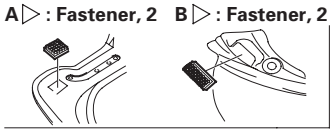

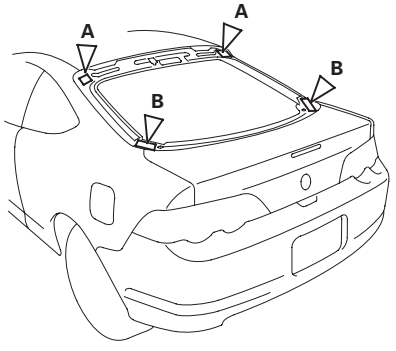

16. Set the rear window in the opening, and center it. Make alignment marks (A) across the rear window, hatch, and body with a grease pencil at the four points shown. Be careful not to touch the rear window where adhesive will be applied.

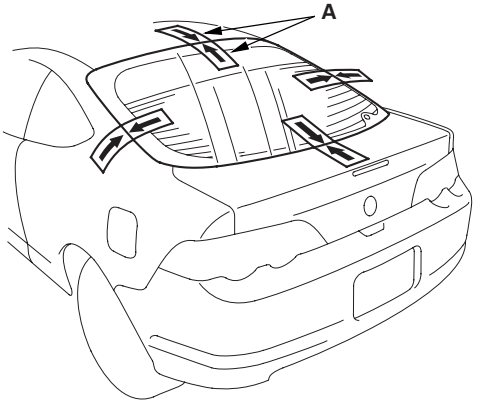

17. Remove the rear window.

18. With a sponge, apply a light coat of glass primer along the edge of the upper molding (A) and rear window molding (B) as shown, then lightly wipe it off with gauze or cheesecloth:

- With the printed dots (C) on the rear window (D) as a guide, apply the glass primer to both side portions of the rear window.
- Do not apply body primer to the rear window, and do not get the hatch and glass primer sponges mixed up.
- Never touch the primed surfaces with your hands. If you do, the adhesive may not bond to the rear window properly, causing a leak after the rear window is installed.
- Keep water, dust, and abrasive materials away from the primed surfaces.

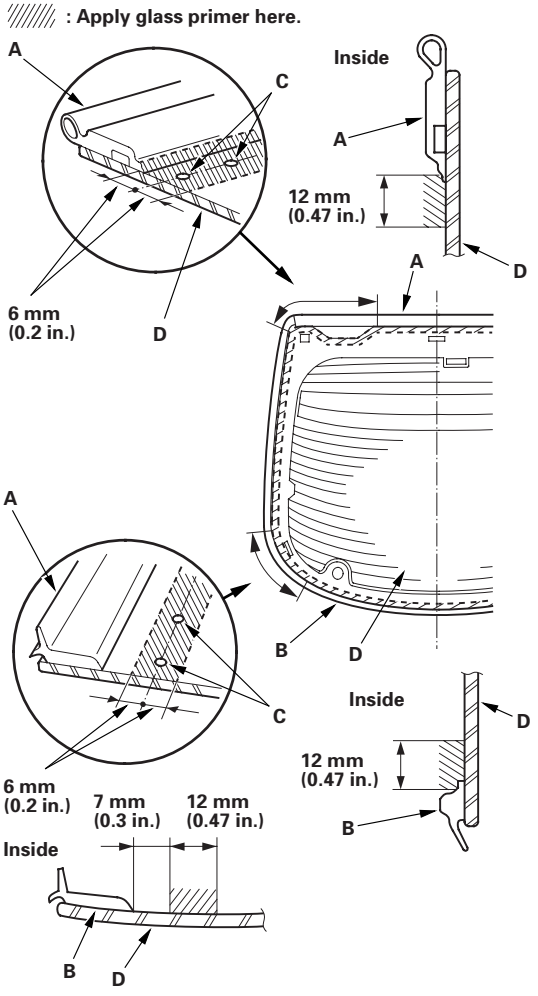

(cont'd)

Rear Window Replacement (cont'd)

19. With a sponge, carefully apply a light coat of body primer to any exposed paint around the flange where new adhesive will be applied. Let the primer dry for at least 10 minutes:

    - Do NOT apply body primer to any remaining original adhesive on the flange.
    - Be careful not to mix up the body and glass primer sponges.
    - Never touch the primed surface with your hands.

    : Apply body primer to exposed paint as shown.

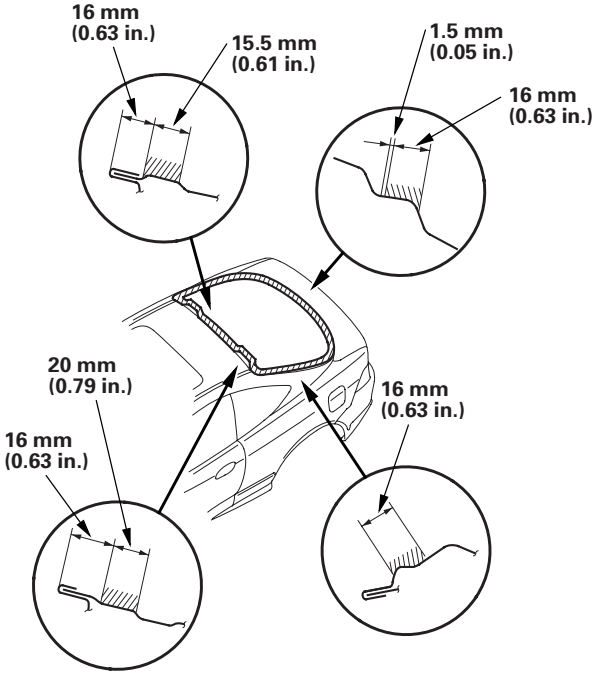

20. Cut a ''V'' in the end of the nozzle (A) on the adhesive cartridge as shown.

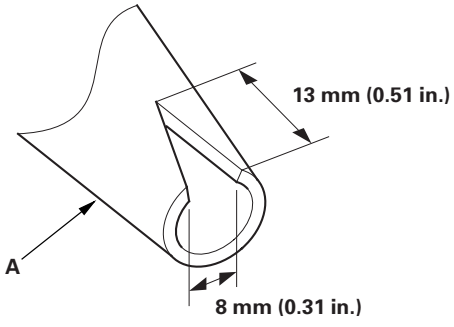

21. Put the cartridge in a caulking gun, and run a bead of adhesive (A) around the edge of the rear window (B) as shown. With the printed dots (C) on the rear window as a guide, apply the adhesive to both side portions of the rear window. Apply the adhesive within 30 minutes after applying the glass primer. Make a slightly thicker bead at each corner.

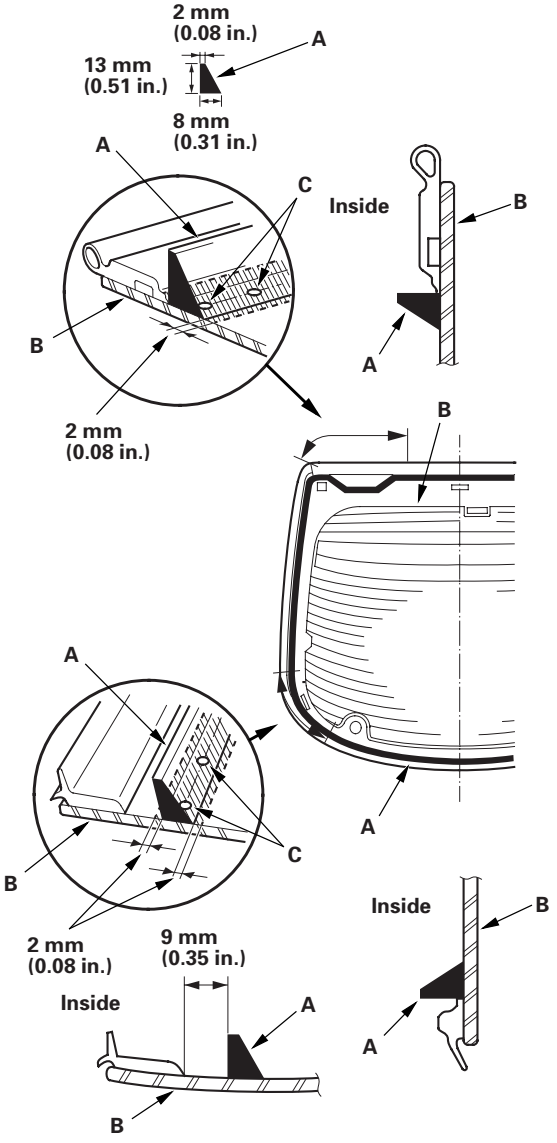

22. Use suction cups to hold the rear window over the opening, align it with the alignment marks you made in step 16, and set it down on the adhesive. Lightly push on the rear window until its edges are fully seated on the adhesive all the way around. Do not open or close the doors until the adhesive is dry.

23. Scrape or wipe the excess adhesive off with a putty knife or towel. To remove adhesive from a painted surface or the rear window, use a soft shop towel dampened with alcohol.

24. Let the adhesive dry for at least 1 hour, then spray water over the rear window and check for leaks. Mark the leaking areas, let the rear window dry, then seal with sealant. Let the vehicle stand for at least 4 hours after rear window installation. If the vehicle has to be used within the first 4 hours, it must be driven slowly.

25. Reinstall all remaining removed parts.

    NOTE: Advise the customer not to do the following things for 2 to 3 days:
    - Slam the doors with all the windows rolled up.
    - Twist the body excessively (such as when going in and out of driveways at an angle or driving over rough, uneven roads).

Quarter Glass Replacement

NOTE:
- Put on gloves to protect your hands.
- Use seat covers to avoid damaging any surface.

1. Remove the quarter pillar trim (see page 20-52).

2. Apply protective tape along the inside and outside edges of the body, and along the edge of the headliner. Using an awl, make a hole through the adhesive from inside the vehicle. Push a piece of piano wire through the hole, and wrap each end around a piece of wood.

3. With a helper on the outside, pull the piano wire (A) back and forth in a sawing motion. Hold the piano wire as close to the quarter glass (B) as possible to prevent damage to the body, and carefully cut through the adhesive (C) around the entire quarter glass:

   - If the quarter glass will be reinstalled, take care not to damage the molding (D).
   - If the molding is damaged, replace the quarter glass, molding, and clips (E) as an assembly.
   - If any of the clips are broken, the quarter glass can be reinstalled using butyl tape (refer to step 8).

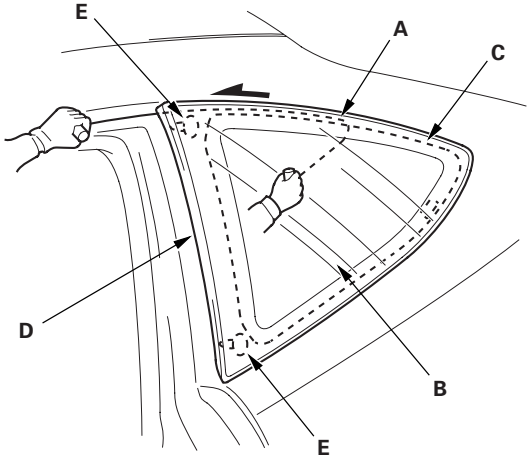

(cont'd)

Quarter Glass Replacement (cont'd)

Cutting position

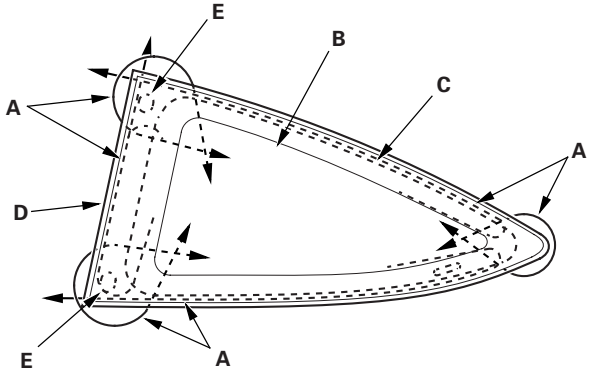

4. Carefully remove the quarter glass.

5. With a putty knife, scrape the old adhesive smooth to a thickness of about 2 mm (0.08 in.) on the bonding surface around the entire quarter glass opening flange:

   - Do not scrape down to the painted surface of the body; damaged paint will interfere with proper bonding.
   - Remove the clips and fastener from the body.

6. Clean the body bonding surface with a sponge dampened in alcohol. After cleaning, keep oil, grease, and water from getting on the surface.

7. If the old quarter glass will be reinstalled, use a putty knife to scrape off all of the old adhesive, any broken clips, and the fastener from the glass. Clean the inside face and the edge of the glass with alcohol where new adhesive will be applied. Make sure the bonding surface is kept free of water, oil, and grease.

8. If the old quarter glass will be reinstalled (and either clip is broken off the molding), apply a light coat of primer, then apply butyl tape (A) to the molding (B) as shown. Attach the fastener (C) with adhesive tape to the inside face of the quarter glass (D):

   - Be sure the fastener lines up with the alignment marks (E).
   - Be careful not to touch the quarter glass where adhesive will be applied.
   - Do not peel the separator off the butyl tape.

   Adhesive tape: Thickness 0.6 mm (0.024 in.)
   Width 7.5 mm (0.3 in.)

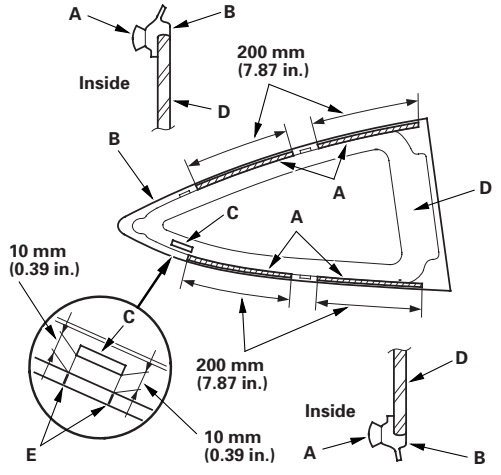

9. If a new quarter glass will be installed, attach the fastener (A) with adhesive tape to the body. Be sure the fastener lines up with the alignment marks (B).

   Adhesive tape: Thickness 0.6 mm (0.024 in.)
   Width 7.5 mm (0.3 in.)

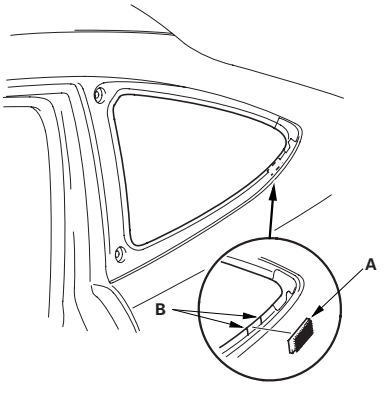

10. If the old quarter glass will be reinstalled (and either clip is broken off the molding), seal the body holes with pieces of urethane tape (A). Then set the quarter glass upright in the opening, and make alignment marks (B) across the quarter glass and body with a grease pencil at the three points shown. Be careful not to touch the quarter glass where adhesive will be applied.

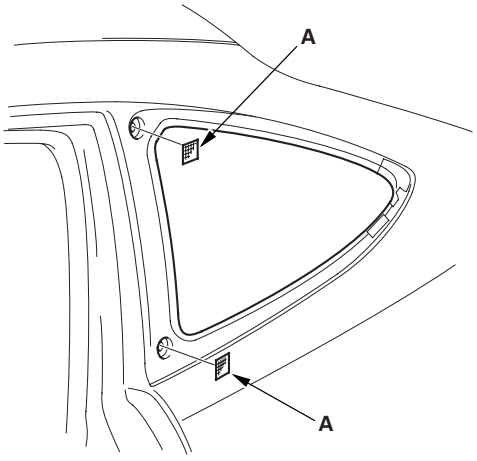

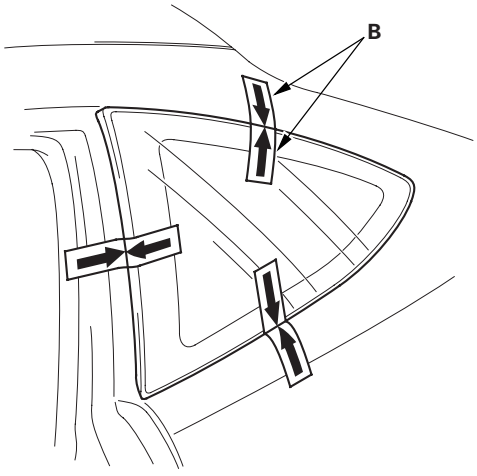

11. Remove the quarter glass.

12. With a sponge, apply a light coat of glass primer to the inside face of the quarter glass (A) as shown, then lightly wipe it off with gauze or cheesecloth:

- Do not apply body primer to the quarter glass, and do not get the body and glass primer sponges mixed up.
- Never touch the primed surfaces with your hands. If you do, the adhesive may not bond to the quarter glass properly, causing a leak after the quarter glass is installed.
- Keep water, dust, and abrasive materials away from the primed surfaces.

: **Apply glass primer here.**

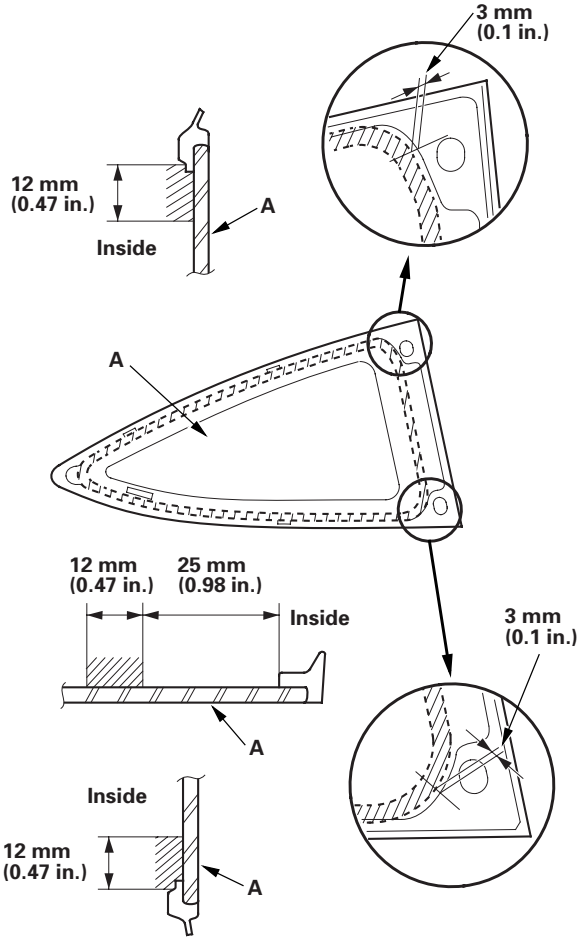

(cont'd)

Quarter Glass Replacement (cont'd)

13. With a sponge, carefully apply a light coat of body primer to any exposed paint around the flange where new adhesive will be applied. Let the primer dry for at least 10 minutes:

    - Do NOT apply body primer to any remaining original adhesive on the flange.
    - Be careful not to mix up the body and glass primer sponges.
    - Never touch the primed surface with your hands.

    : Apply body primer to exposed paint as shown.

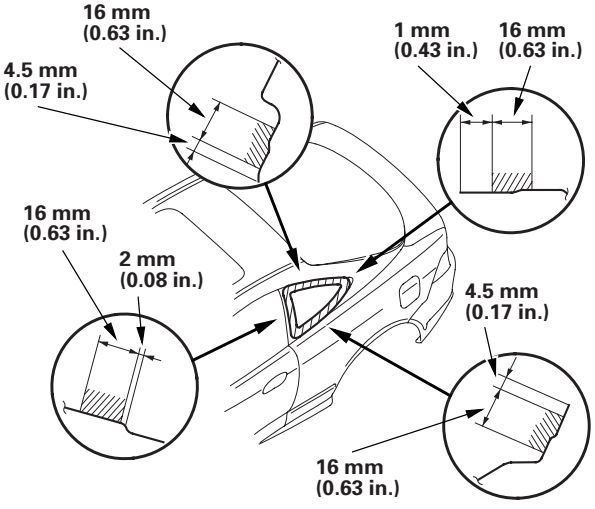

14. Cut a ''V'' in the end of the nozzle (A) on the adhesive cartridge as shown.

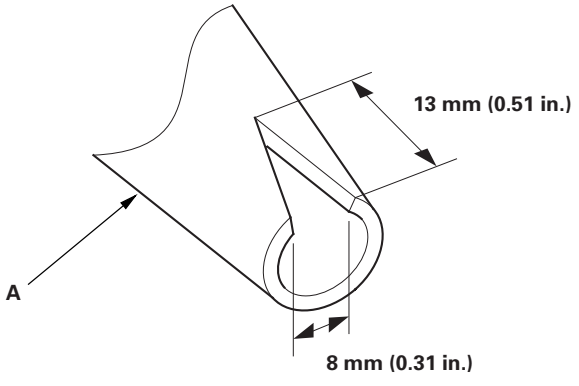

15. Put the cartridge in a caulking gun, and run a bead of adhesive (A) around the edge of the quarter glass (B) as shown:

    - After applying the adhesive, peel the separator off the butyl tape.
    - Apply the adhesive within 30 minutes after applying the glass primer. Make a slightly thicker bead at each corner.

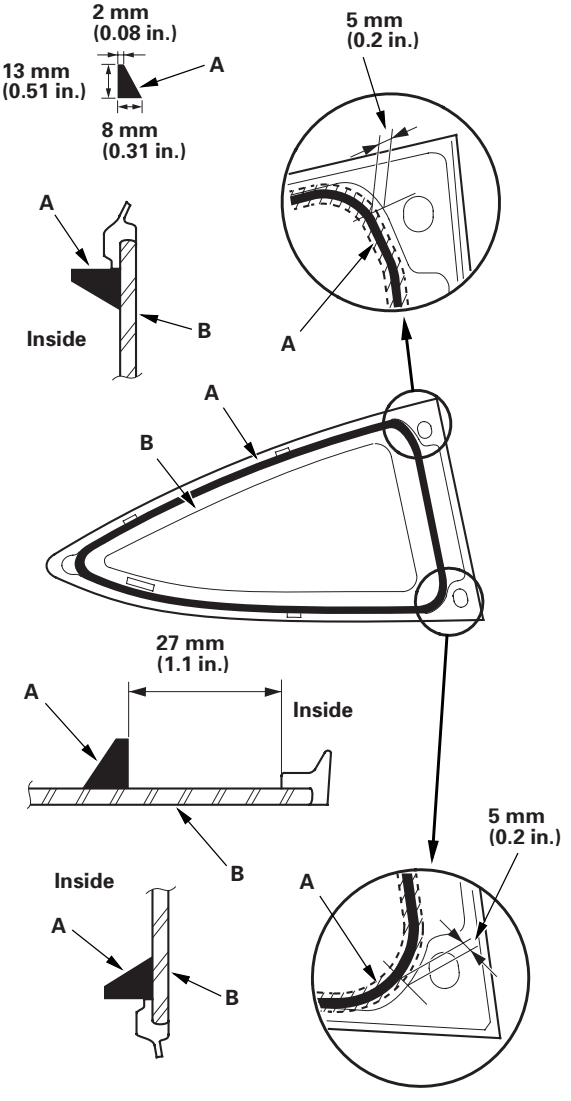

16. Use suction cups (A) to hold the quarter glass (B) over the opening, align the clips or the alignment marks (C) made in step 10, and set it down on the adhesive. Lightly push on the quarter glass until its edges are fully seated on the adhesive all the way around. Do not open or close the doors until the adhesive is dry.

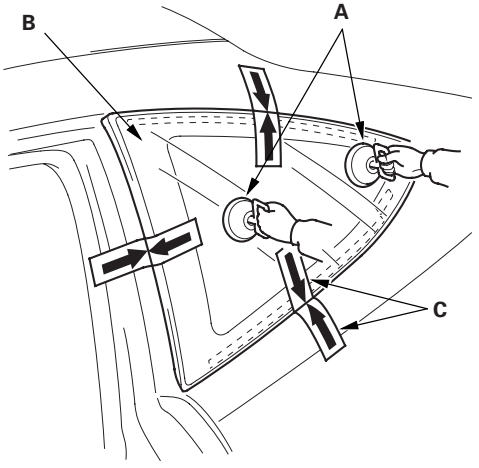

17. Scrape or wipe the excess adhesive off with a putty knife or towel. To remove adhesive from a painted surface or the quarter glass, wipe with a soft shop towel dampened with alcohol.

18. Let the adhesive dry for at least 1 hour, then spray water over the quarter glass and check for leaks. Mark the leaking areas and let the quarter glass dry, then seal with sealant. Let the vehicle stand for at least 4 hours after quarter glass installation. If the vehicle has to be used within the first 4 hours, it must be driven slowly.

19. Reinstall all remaining removed parts.

    NOTE: Advise the customer not to do the following things for 2 to 3 days:
    - Slam the doors with all the windows rolled up.
    - Twist the body excessively (such as when going in and out of driveways at an angle or driving over rough, uneven roads).

Component Location Index

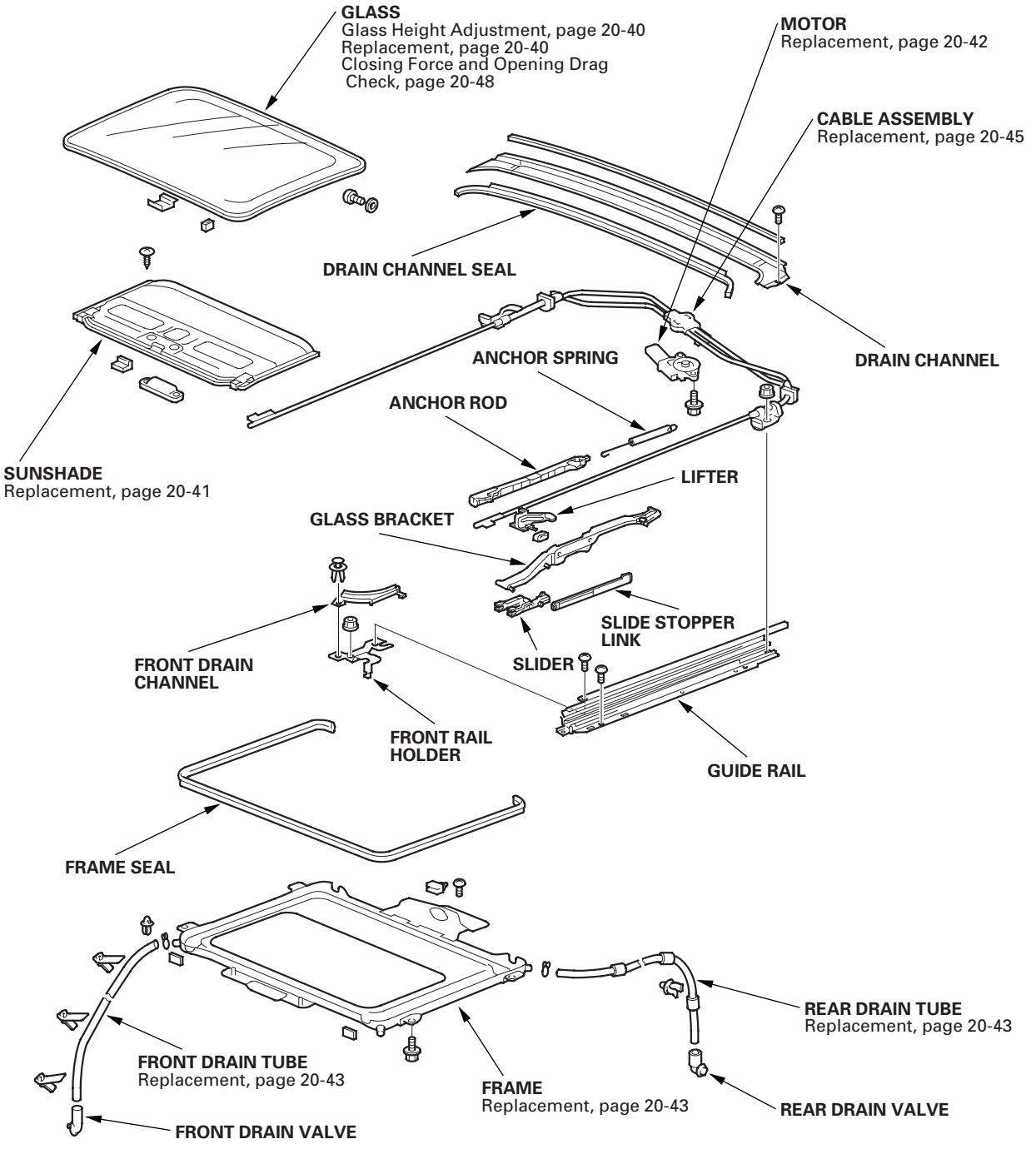

Symptom Troubleshooting Index

Symptom	Diagnostic procedure	Also check for
Water leaks from moonroof	1. Check for a clogged drain tube. 2. Check for a gap between the glass weatherstrip and the roof panel. 3. Check for a defective or an improperly installed glass weatherstrip or drain channel. 4. Check for a gap between the drain seal and the roof panel.	
Wind noise from moonroof	Check for excessive clearance between the glass weatherstrip and the roof panel.	
Motor noise from moonroof	1. Check for a loose motor. 2. Check for a worn gear or bearing. 3. Check for a deformed cable assembly.	
Glass does not move, but motor turns	1. Check for a defective gear or inner cable. 2. Check for foreign material stuck between the guide rail and the slider. 3. Check for a loose inner cable. 4. Make sure the cable assembly is attached properly.	
Glass does not move and motor does not turn (glass can be moved with moonroof wrench)	1. Check for a blown fuse. 2. Check for a faulty moonroof switch. 3. Check for a run down battery. 4. Check for a defective motor. 5. Check for a faulty relay.	

Glass Height Adjustment

The roof panel (A) should be even with the glass weatherstrip (B), to within 2+0.5/−1 mm (0.08+0.02/−0.04 in.) all the way around. If not, make the following adjustment:

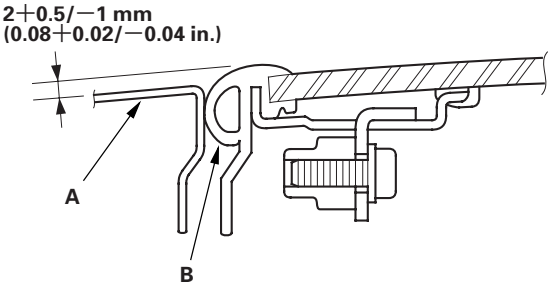

1. Tilt-up the glass.
2. Loosen the bolts on each side, and adjust the glass (A).

Fastener Locations

▶ : Bolt, 6

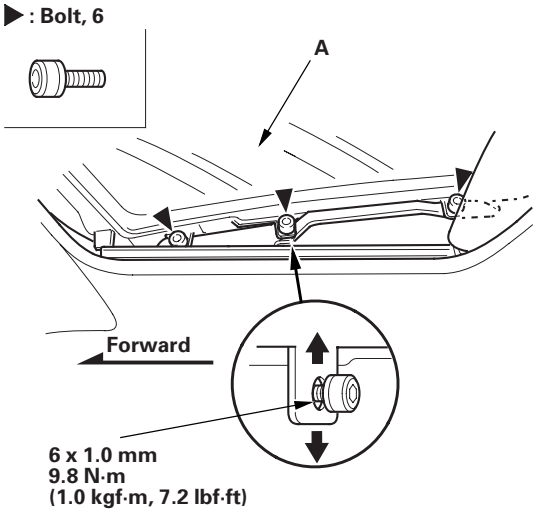

3. If necessary, repeat on opposite side.
4. The side-to-side fit of the glass weatherstrip can be adjusted by loosening the frame mounting bolts and moving the frame right or left and forward or backward by hand (see page 20-43).

Glass Replacement

1. Tilt-up the glass.
2. Remove the bolts from both sides.

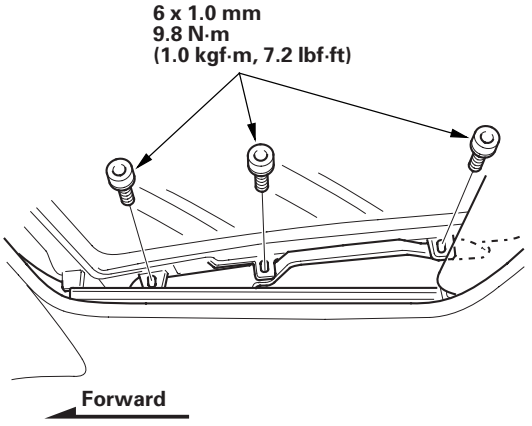

3. Remove the glass (A) by lifting it up. Do not damage the roof panel.

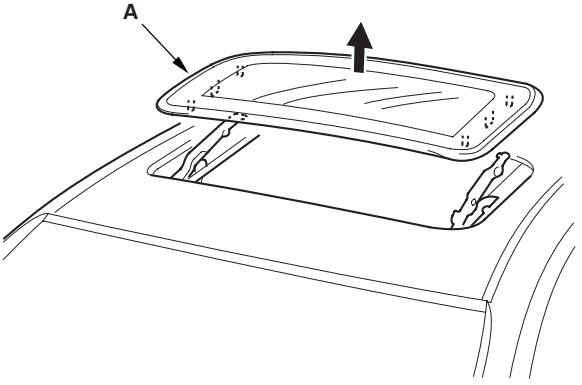

4. Install the glass in the reverse order of removal, and adjust the glass height (see page 20-40).
5. Check for water leaks. Use free-flowing water from a hose without a nozzle. Do not use high-pressure water.

Sunshade Replacement

1. Remove the glass.

2. Remove the screws from the front edges of both sunshade rails (A).

Fastener Locations

▶ : Screw, 2

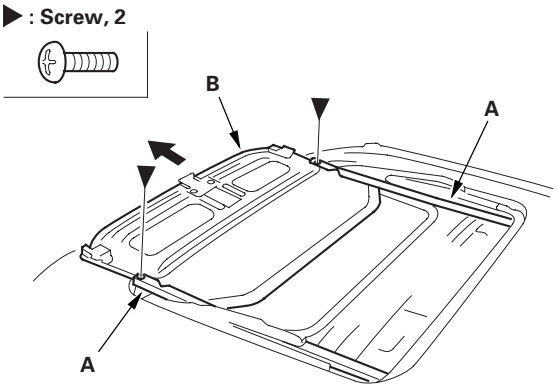

3. Carefully slide the sunshade (B) forward, then remove it.

4. Install the sunshade in the reverse order of removal, and adjust the glass height (see page 20-40).

5. Check for water leaks. Use free-flowing water from a hose without a nozzle. Do not use high-pressure water.

Motor Replacement

1. Remove the headliner (see page 20-55).

2. Put on gloves to protect your hands. Disconnect the connector (A), and remove the bolts, then remove the motor (B).

Fastener Locations

▶ : Bolt, 2

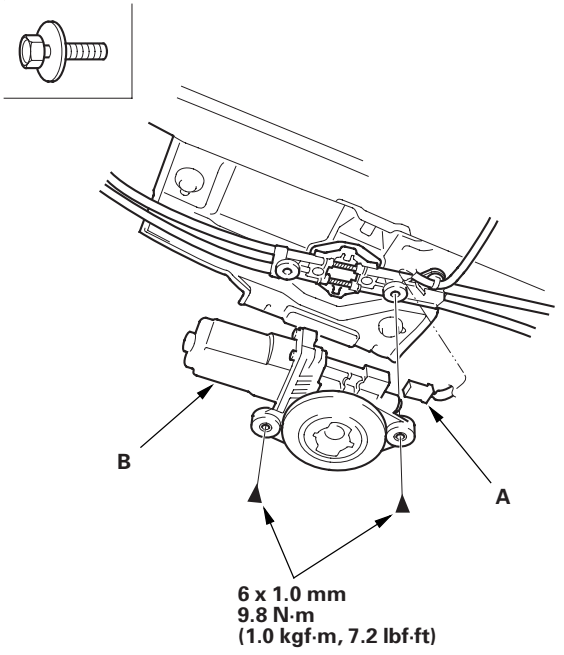

3. Install the motor in the reverse order of removal, and note these items:

   - Make sure the connector is plugged in properly.
   - Check the motor operation.

Frame and Drain Tube Replacement

1. Remove these items:

   - Headliner (see page 20-55)
   - Moonroof glass (see page 20-40)

2. Put on gloves to protect your hands. Disconnect the motor connector (A) and drain tubes (B), and remove the interior harness (C) by detaching the harness clips (D) and removing the cushion tape (E).

Fastener Locations

E ▷ : Cushion tape, 6

G ▶ : Bolt, 8

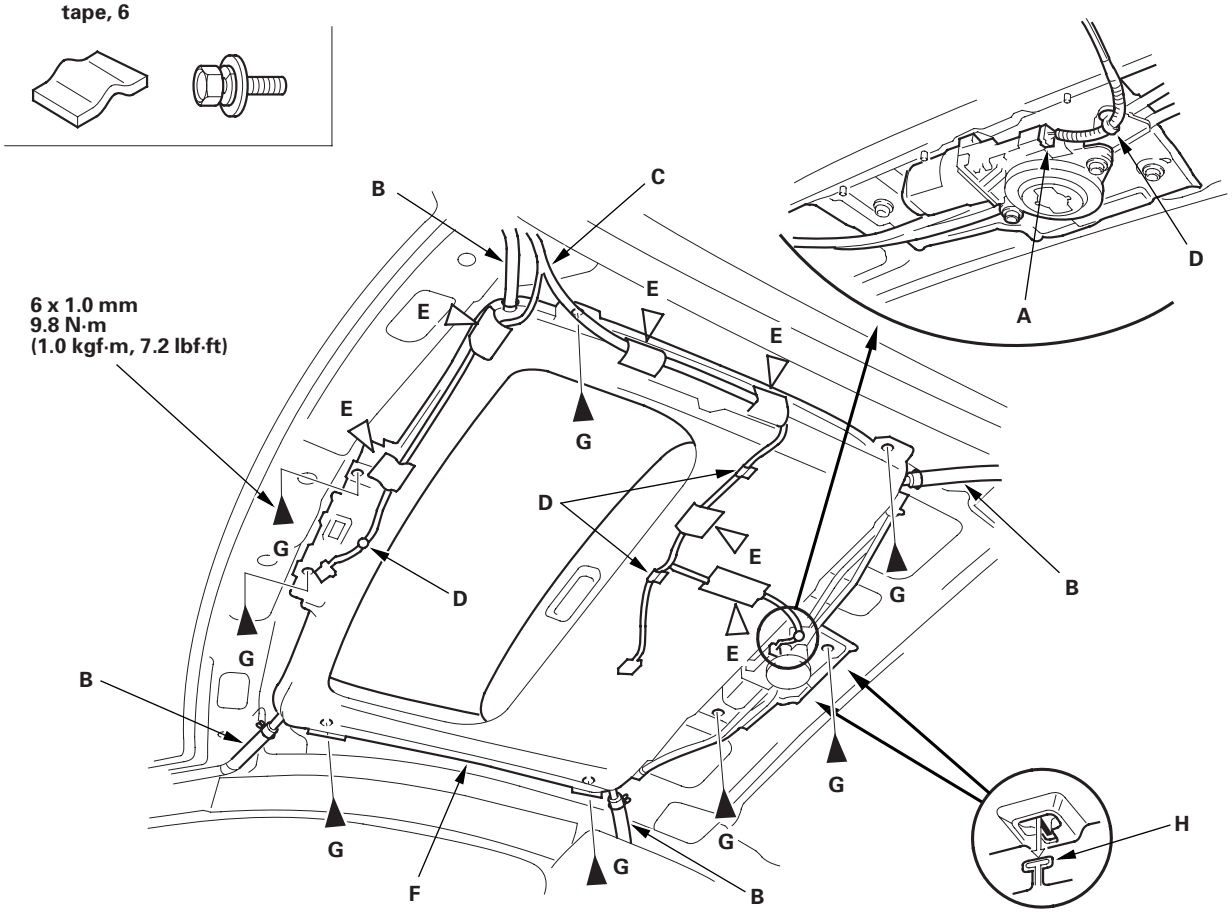

3. With an assistant holding the frame (F), remove the bolts (G), starting at the rear. Release the rear hooks (H) by moving the frame forward, then remove the frame.

4. With the help of an assistant, carefully remove the frame through the door opening. Take care not to scratch the interior trim and body, or tear the seat covers.

(cont'd)

Frame and Drain Tube Replacement (cont'd)

5. To remove the front drain valve (A) from the body, remove the kick panel, left or right (see page 20-50). Detach the clips (B, C), and on the left A-pillar, release the interior harness (D) from the clips (C).

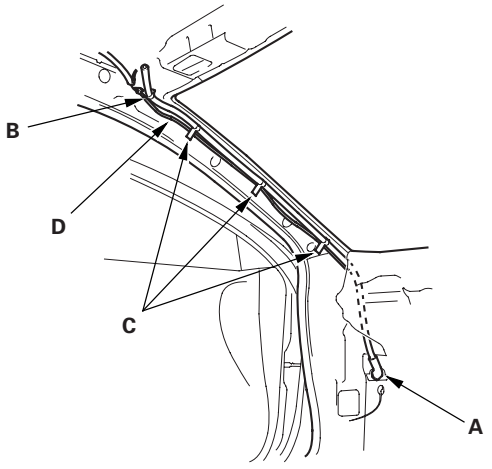

6. To remove the rear drain valve (A) from the cargo area, remove the cargo area side trim panel, left or right (see page 20-53). Release the rear drain tube (B) from the clip (C), and tie a string to the end of the drain tube, then pull the drain tube down out of the C-pillar.

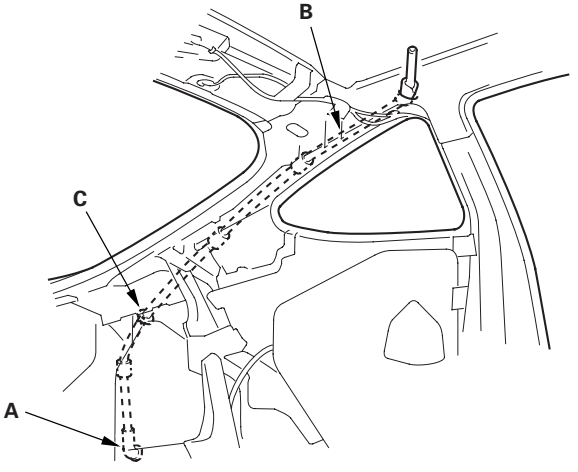

7. Install the frame and drain tube in the reverse order of removal, and note these items:

   - Before installing the frame, clear the drain tubes and drain valves using compressed air.
   - Check the frame seal.
   - Clean the surface of the frame.
   - When installing the frame, first attach the rear hooks into the body holes.
   - Make sure the connector is plugged in properly.
   - When connecting the drain tube, slide it over the frame nozzle at least 10 mm (0.39 in.).
   - Install the tube clip (A) on the drain tube (B) as shown.

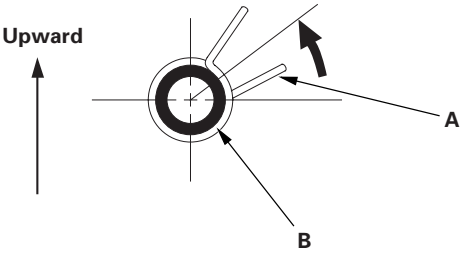

8. Check for water leaks. Use free-flowing water from a hose without a nozzle. Do not use high-pressure water.

Cable Assembly Replacement

NOTE: Put on gloves to protect your hands.

1. Remove the frame (see page 20-43).

2. Remove these items from the frame:

   - Sunshade (see page 20-41)
   - Motor (see page 20-42)

3. Remove the screws, then remove the drain channel (A). Take care not to twist or lift the drain channel seal (B).

Fastener Locations

▶ : Screw, 2

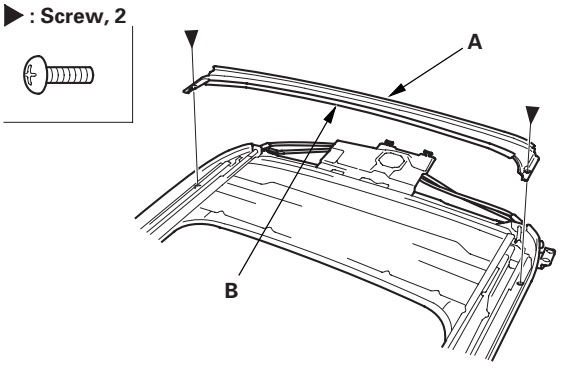

4. From both sides, remove the clips (A), nuts (B), and screws (C), then remove the front drain channels (D) and front rail holders (E).

Fastener Locations

A ▷ : Clip, 2 B ● : Nut, 2 C ▶ : Screw, 2

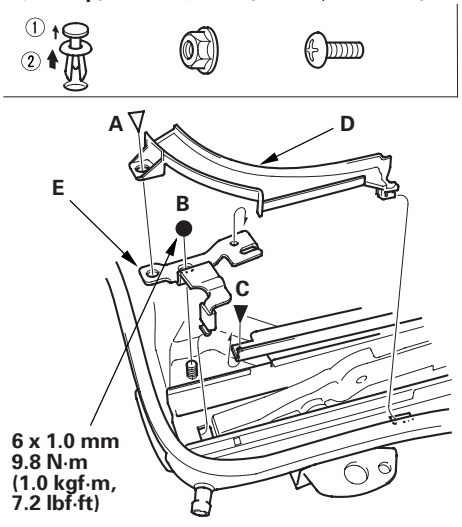

5. Put on gloves to protect your hands. From the motor bracket portion and both guide rail portions, remove the screws (A, B) and nuts (C), then remove the guide rails (D), grommets (E), and cable assembly (F) from the frame (G). Take care not to bend the cable tubes (H).

Fastener Locations

A ▶ : Screw, 3 (Gold) B ▶ : Screw, 4 C ● : Nut, 2

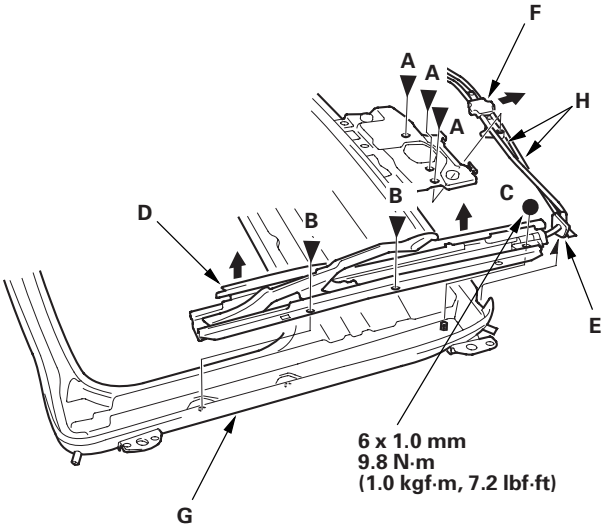

(cont'd)

Cable Assembly Replacement (cont'd)

6. From both sides, remove the anchor springs (A) and glass bracket (B), and slide cable assembly (C) rearward.

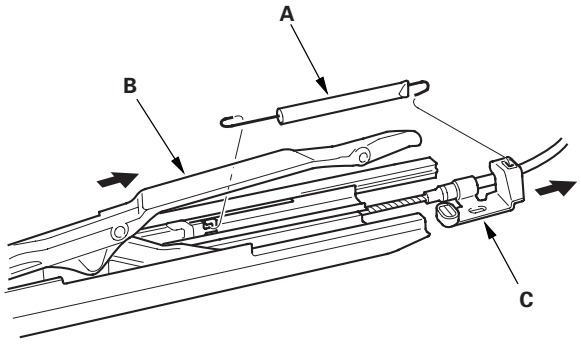

7. Remove the glass bracket (A), slider (B), lifter (C), and slide stop link (D) from the guide rail (E), and remove the inner cable end (F) from the lifter.

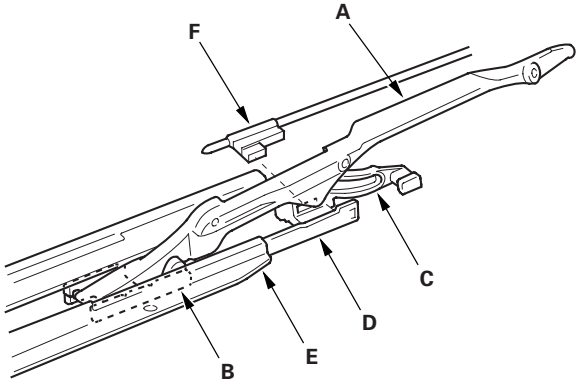

8. Separate the glass bracket (A), slider (B), slide stop link (C), and lifter (D).

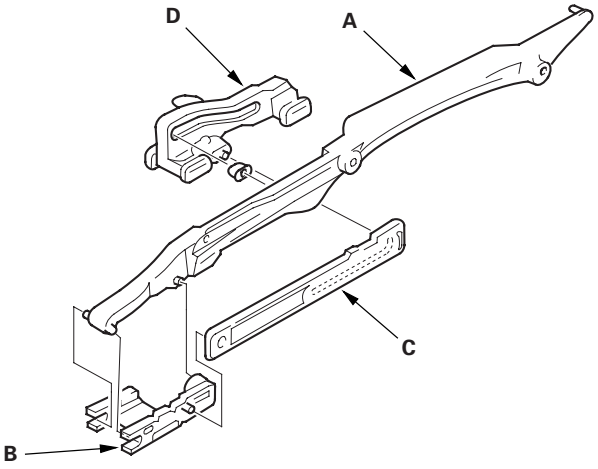

9. Pull the anchor rod (A) out from the guide rail (B).

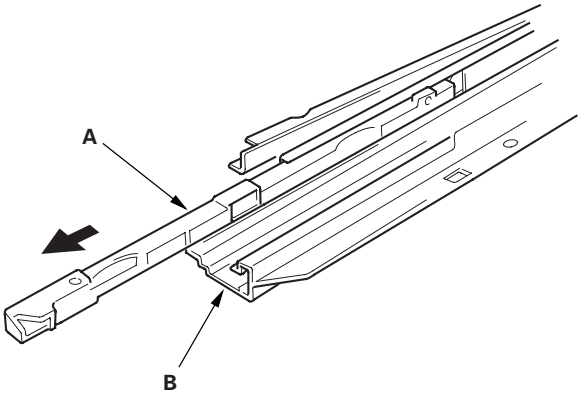

10. Install the cable assembly in the reverse order of removal, and note these items:

- Worn or damaged parts should be replaced.
- Apply multipurpose grease to the groove portions of the lifter (A) and slide stop link (B) and to the sliding portions of the guide rail (C) indicated by the arrows.
- After reinstalling the cable assembly (D) on the frame (E), fill the groove in both grommets (F) with sealant (G).
- Check the frame seal.
- When reinstalling the anchor rod (H), insert it into the guide rail (I) by turning the stop (J) 90 °.
- Take care not to twist or lift the drain channel seal.
- Before reinstalling the motor, align the tilt-up position of the lifter (K) on each side. Be sure the bushing (L) on the glass bracket (M) contacts the top end of the groove (N) in the lifter.
- Before reinstalling the motor, install the frame and glass, then check the opening drag (see page 20-48).

Grease application

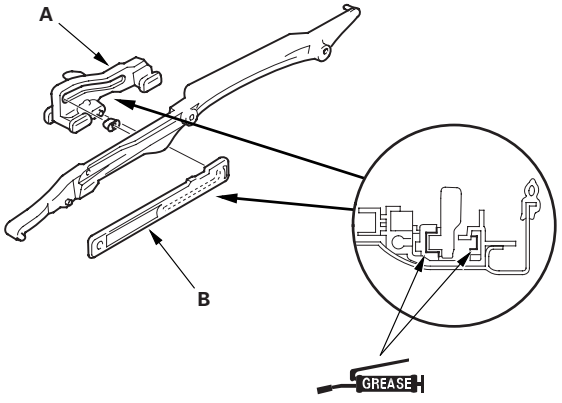

Grease applications

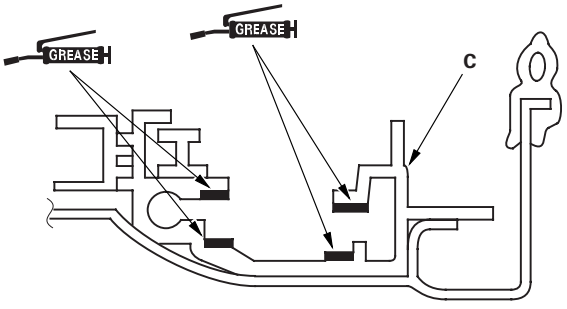

Sealant applications

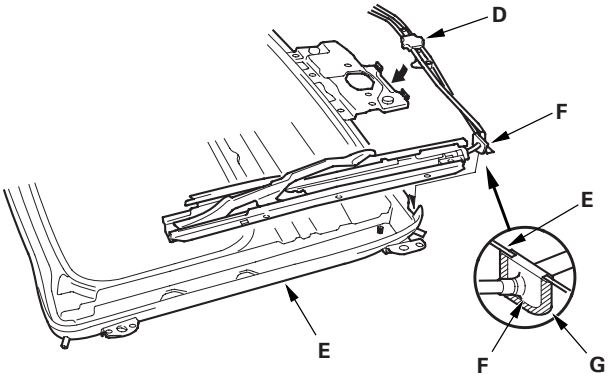

Anchor rod installation

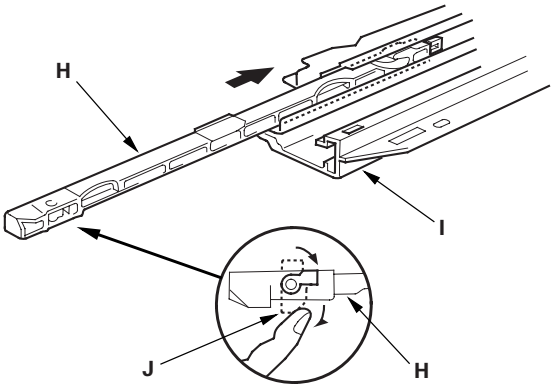

Tilt-up position alignment

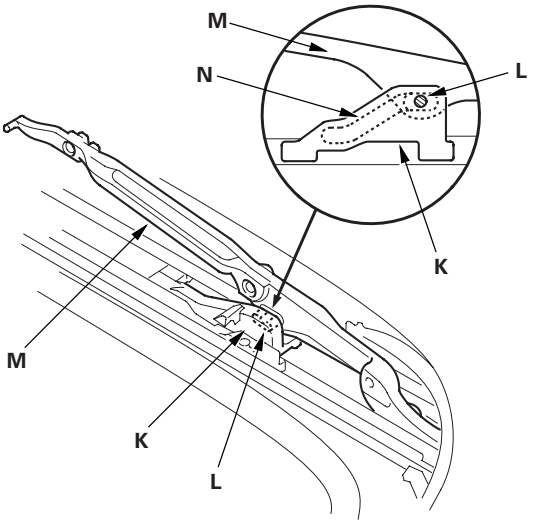

Closing Force and Opening Drag Check

1. Remove the headliner (see page 20-55).

2. Closing force check:

   - With a shop towel (A) on the leading edge of the glass (B), attach a spring scale (C) as shown.
   - Have an assistant hold the switch to close the glass while you measure the force required to stop it.
   - Read the force as soon as the glass stops moving, then immediately release the switch and spring scale.

   Closing Force: 200—290 N (20—30 kgf, 44—66 lbf)

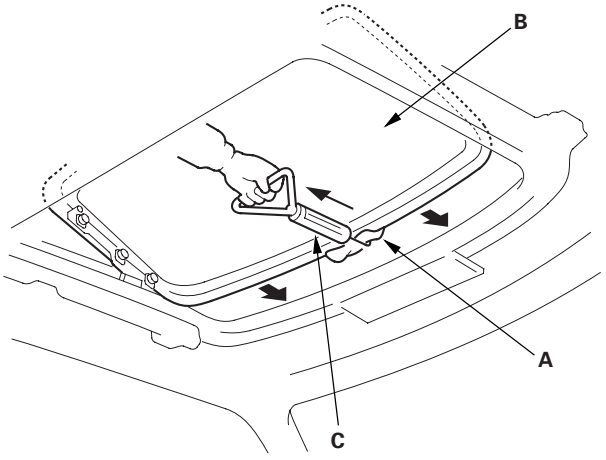

3. If the force is not within specification, remove the moonroof motor (see page 20-42), then check these items:

   - The gear position and the inner cable for breakage and damage. If the gear portion is broken, replace the motor. If the inner cable is damaged, remove the frame (see page 20-43), and replace the cable assembly (see page 20-45).
   - The moonroof motor (see page 22-131). If the motor fails to run or doesn't turn smoothly, replace it.
   - The opening drag. Go to step 4.

4. Opening drag check: Protect the leading edge of the glass with a shop towel (A). Measure the effort required to open the glass using a spring scale (B) as shown.

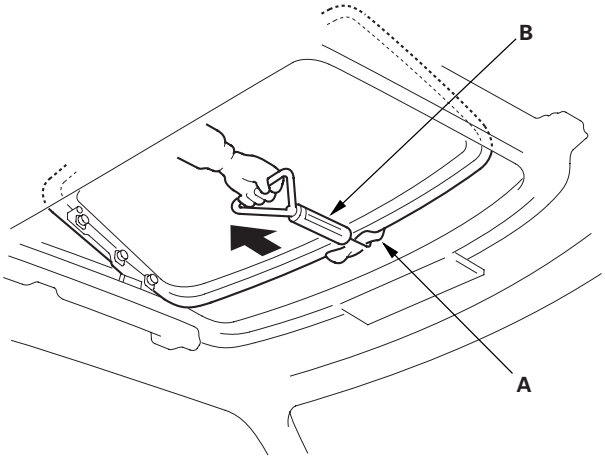

5. If the load is over 40 N (4 kgf, 9 lbf), check these items:

   - The side clearance and glass height adjustment (see page 20-40).
   - For broken or damaged sliding parts. If any sliding parts are damaged, replace them.

Trim Removal/Installation - Door Areas

Special Tools Required
KTC trim tool set SOJATP2014

NOTE:
- Put on gloves to protect your hands.
- Use the appropriate tool from the KTC trim tool set to avoid damage when prying components.
- Take care not to bend or scratch the trim and panels.

1. Remove the trim as shown.

2. Install the trim in the reverse order of removal, and note these items:

   - Replace any damaged or stress-whitened clips.
   - When reinstalling the door opening trim, first align the rear upper corner portion of the trim on the rear upper corner of the door opening flange.
   - Push the clips into place securely.

Fastener Locations

A ▷ : Clip, 6 (Black) **B ▷ : Clip, 4 (White)** **C ▷ : Clip, 4**

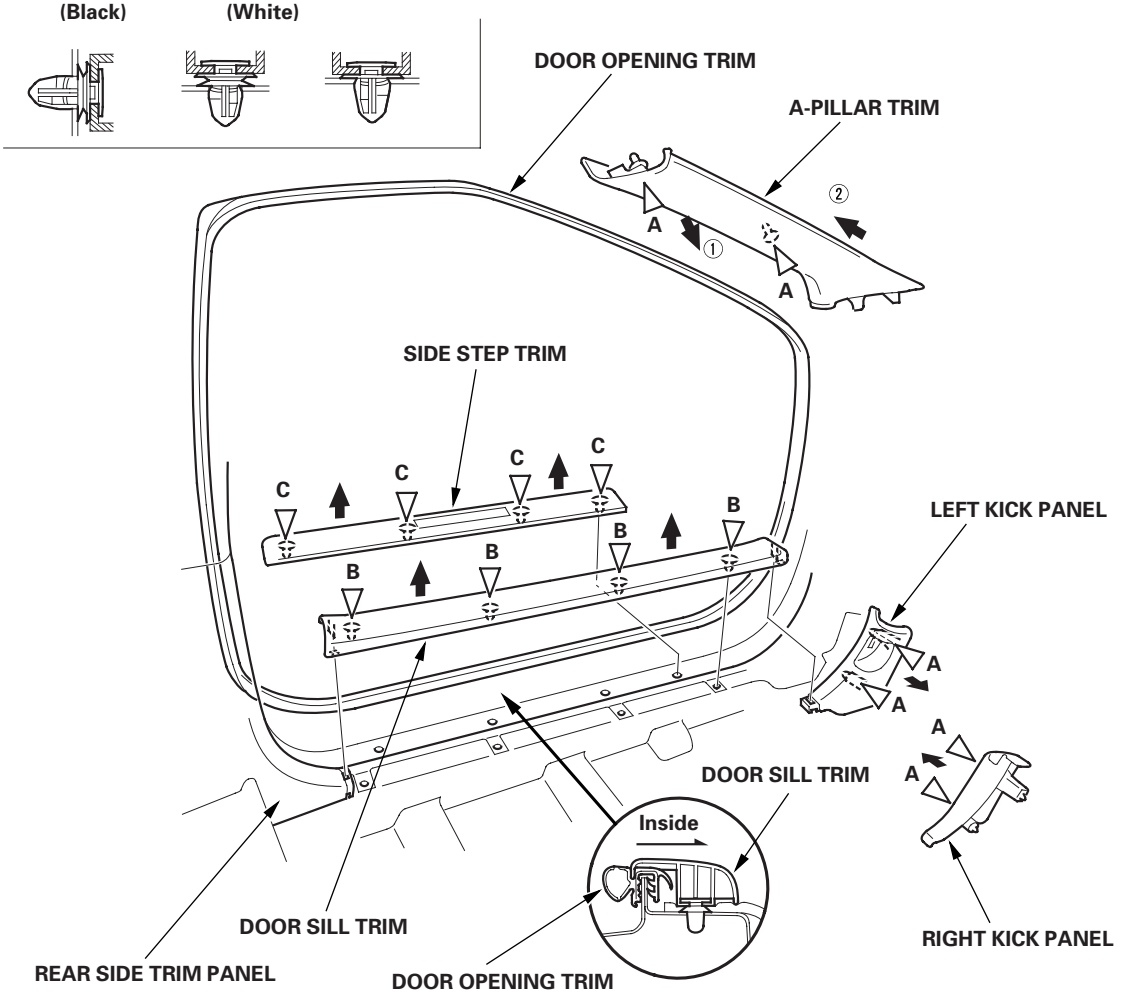

Trim Removal/Installation - Rear Side Area

Special Tools Required
KTC trim tool set SOJATP2014

NOTE:
- Put on gloves to protect your hands.
- Use the appropriate tool from the KTC trim tool set to avoid damage when prying components.
- Take care not to bend or scratch the trim and panels.

1. Remove these items, and remove the trim as shown:

   - Rear seat-back and seat cushion (see page 20-85)
   - Rear seat-back pivot bracket (see page 20-86)
   - Door sill trim (see page 20-50)

2. Install the trim in the reverse order of removal, and note these items:

   - Replace any damaged or stress-whitened clips.
   - Make sure the connectors are plugged in properly.
   - When installing the rear side trim panel, make sure there are no pinches in the belt.
   - Apply liquid thread lock to the rear seat-back pivot bolt before installation.
   - Push the clips into place securely.

Fastener Locations

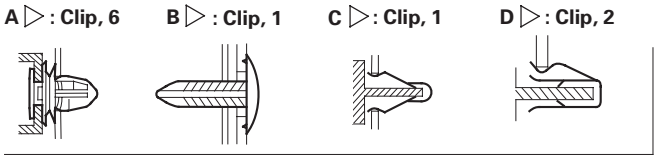

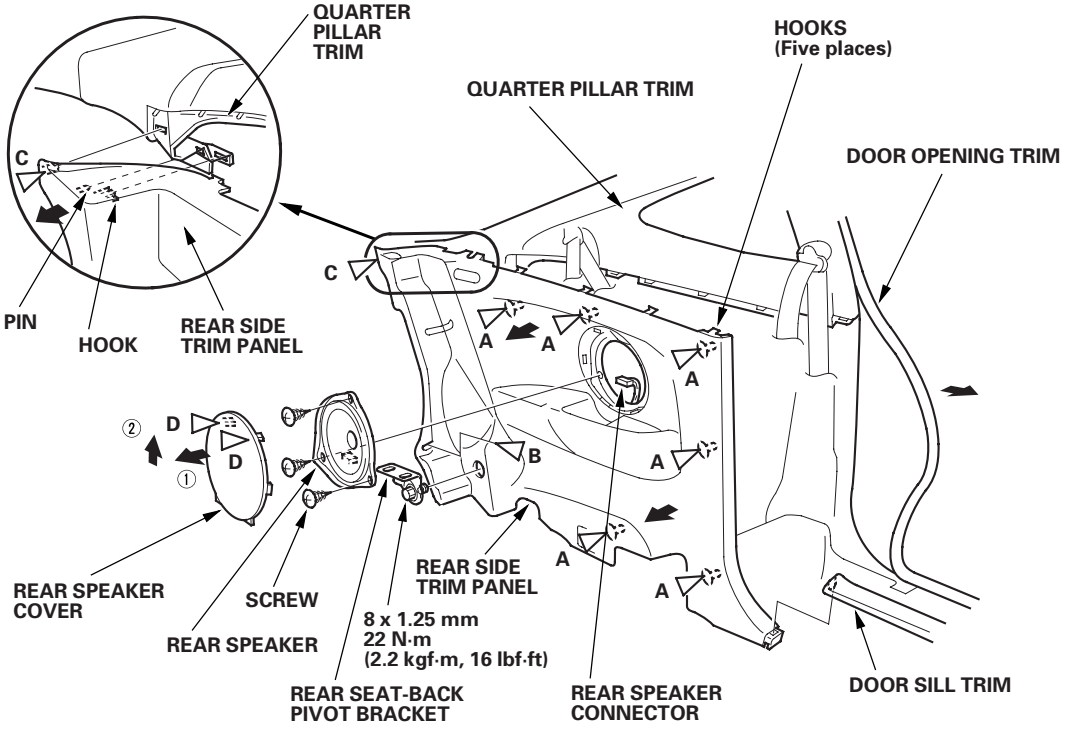

Trim Removal/Installation - Quarter Pillar Area

Special Tools Required
KTC trim tool set SOJATP2014

NOTE:
- Put on gloves to protect your hands.
- Use the appropriate tool from the KTC trim tool set to avoid damage when prying components.
- Take care not to bend or scratch the trim and panels.

1. Remove the trim as shown:

   - To remove the quarter pillar trim, remove the upper portion of the rear side trim panel as necessary (see page 20-51).
   - To remove the right quarter pillar trim, disconnect the cargo area light connector.

2. Install the trim in the reverse order of removal, and note these items:

   - Replace any damaged or stress-whitenings clips.
   - Apply liquid thread lock to the anchor bolts before installation.
   - When installing the rear side trim panel, make sure there are no pinches in the belt.
   - Before installing the anchor bolts, make sure there are no twists or kinks in the belts.
   - Push the clips into place securely.

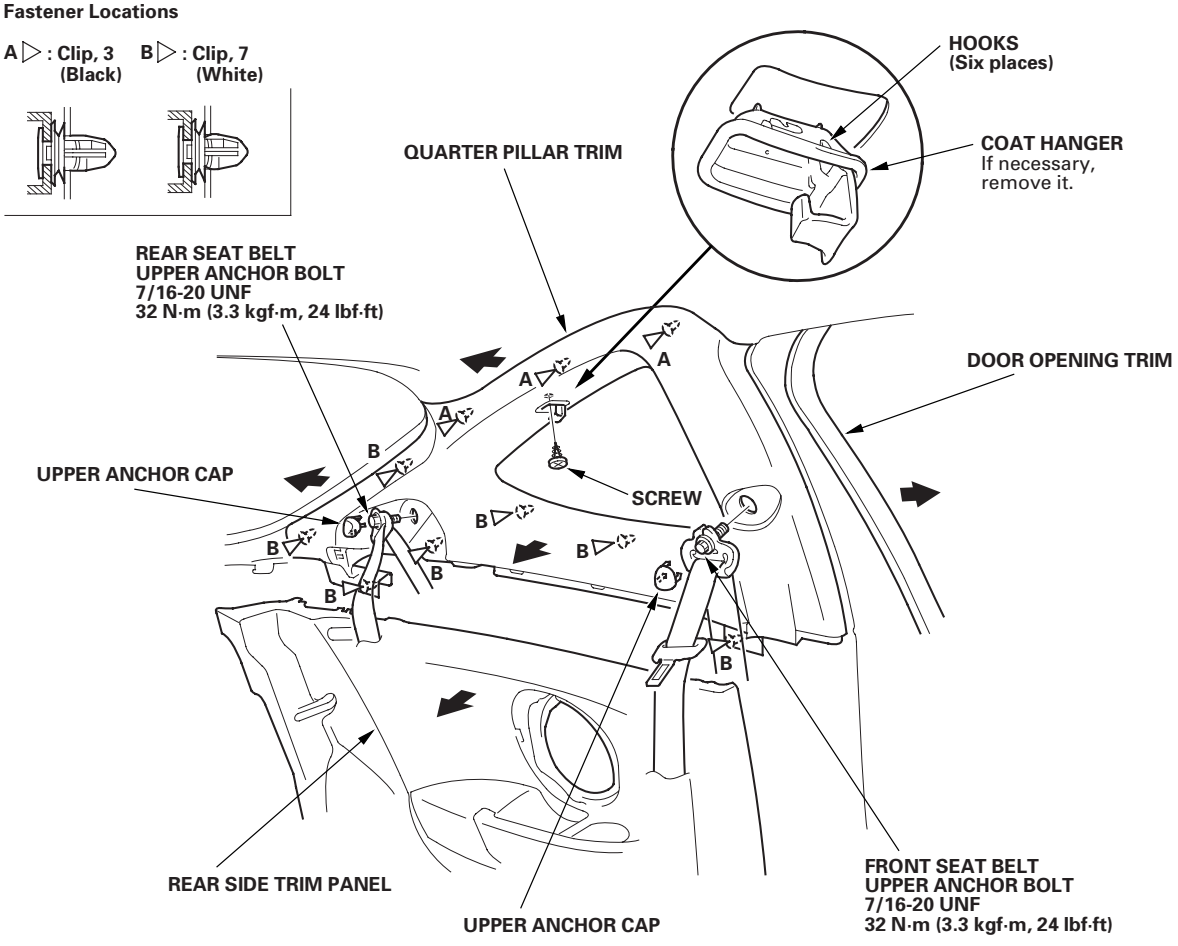

Trim Removal/Installation - Cargo Area

Special Tools Required
KTC trim tool set SOJATP2014

NOTE:
- Put on gloves to protect your hands.
- Use the appropriate tool from the KTC trim tool set to avoid damage when prying components.
- Take care not to bend or scratch the trim and panels.

1. Remove the trim as shown: To remove the trunk side trim panel, remove the rear side trim panel as necessary (see page 20-51) and quarter pillar trim as necessary (see page 20-52).

2. Install the trim in the reverse order of removal, and note these items:

   - Replace any damaged or stress-whitenings clips.
   - Push the clips into place securely.

Fastener Locations

A ▷ : Clip, 4 B ▷ : Clip, 4 C ▷ : Clip, 4 D ▷ : Clip, 3

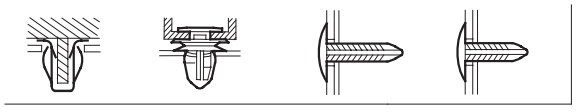

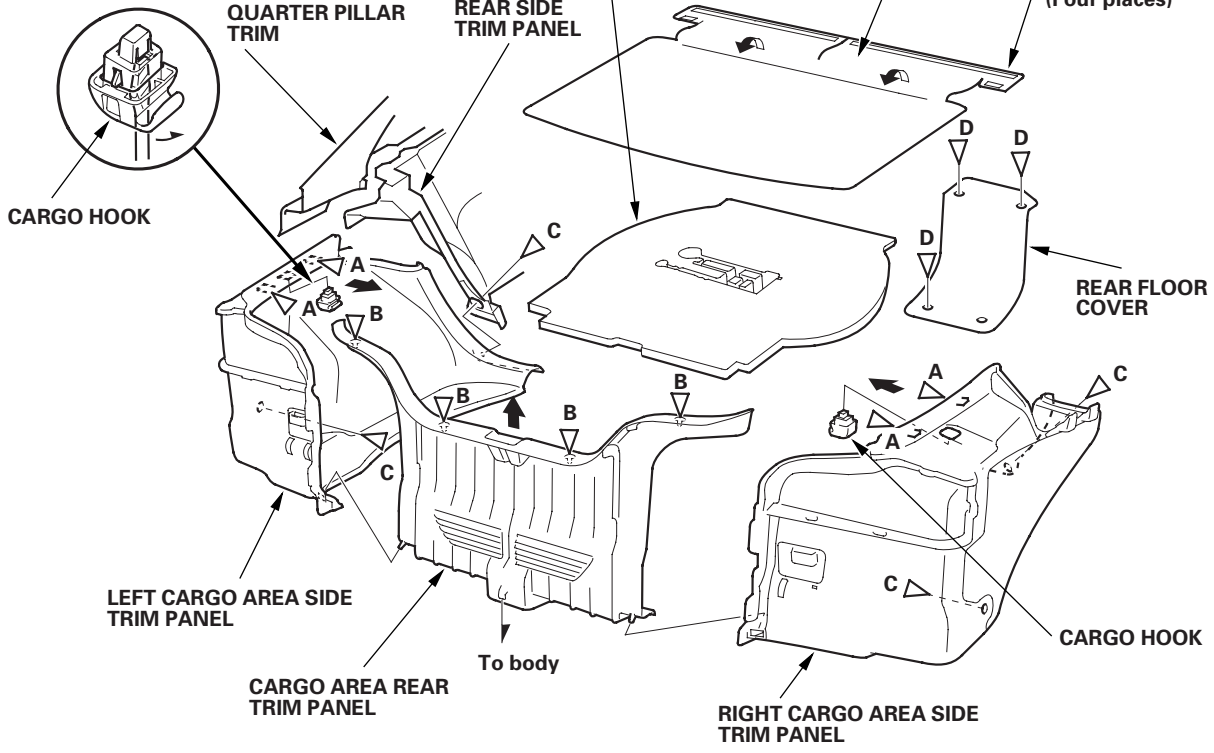

Trim Removal/Installation - Hatch Area

Special Tools Required
KTC trim tool set SOJATP2014

NOTE:
- Put on gloves to protect your hands.
- Use the appropriate tool from the KTC trim tool set to avoid damage when prying components.
- Take care not to bend or scratch the trim and panels.

1. Remove the trim in the sequence shown:

   - Rear shelf
   - Rear shelf hooks
   - Right hatch side trim
   - Left hatch side trim
   - Hatch trim panel

2. Install the trim in the reverse order of removal, and note these items:

   - Replace any damaged or stress-whitenings clips.
   - If the threads on a pull pocket screw are worn out, use an oversized self-tapping ET screw (P/N 90137-S2G-003) made specifically for this application.
   - Push the clips into place securely.

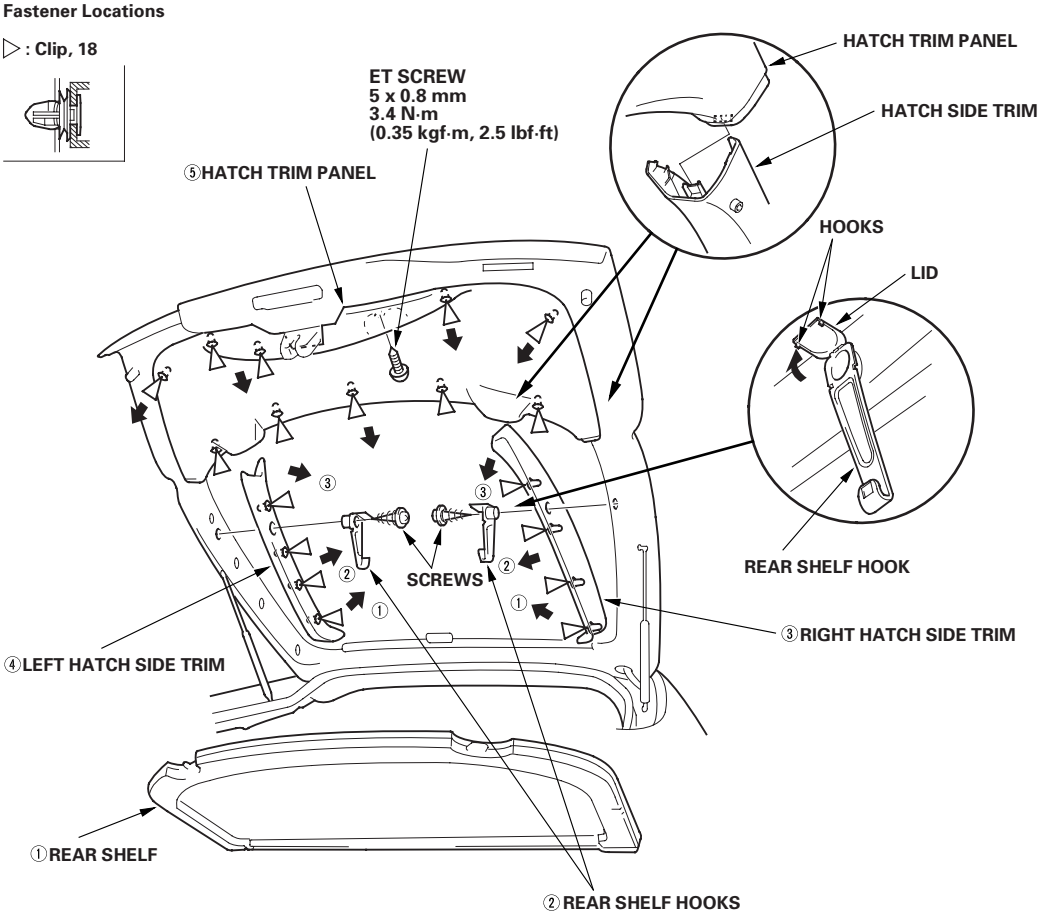

Headliner Removal/Installation

Special Tools Required
KTC trim tool set SOJATP2014

NOTE:
- Use the appropriate tool from the KTC trim tool set to avoid damage when prying components.
- Take care not to bend and scratch the headliner.
- Be careful not to damage the dashboard and other interior trim pieces.

1. Remove these items:

   - A-pillar trim, both sides (see page 20-50)
   - Front seat belt upper anchor, both sides (see step 6 on page 23-4)
   - Rearview mirror (see page 20-18)
   - Spotlights with moonroof (see page 22-107)
   - Ceiling light (see page 22-107)

2. Remove the sunvisor (A) and holder (B) from both sides.

   –1 Remove the caps (C).
   –2 Remove the self-tapping ET screws.
   –3 Remove the sunvisor from the body and holder.
   –4 Using a flat-tip screwdriver, push the hook (D), and turn the holder 90 °, then pull it out.

Fastener Locations

▶ : **Screw, 4**

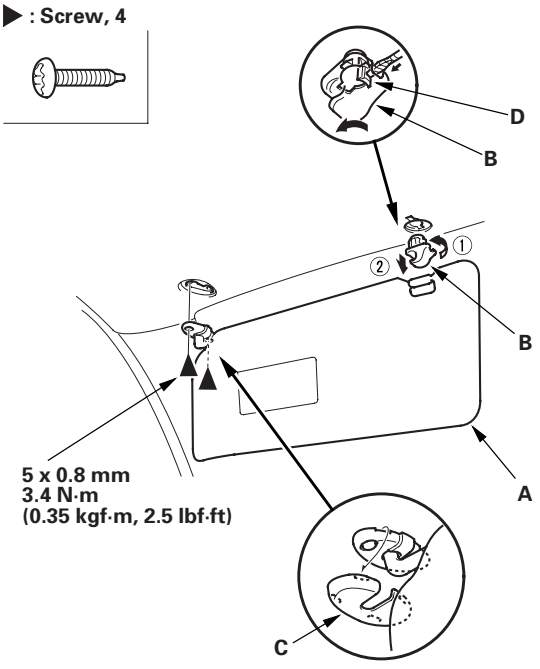

3. Pull the door opening trim (A) away from the roof on both sides, and then release the upper portions of the quarter pillar trim pieces (B) from both sides (see page 20-52).

Fastener Locations

▷ : **Clip, 2**

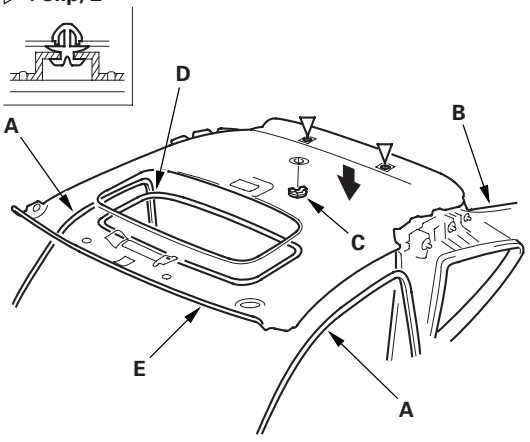

4. With moonroof: Remove the socket plug (C) and roof trim (D).

5. With the help of an assistant, detach the rear clips by pulling the rear portion of the headliner (E) down.

(cont'd)

Headliner Removal/Installation (cont'd)

6. With the help of an assistant, hold the tops of the quarter pillar trim pieces (A) away from the roof, and work the headliner (B) free in the sequence shown.

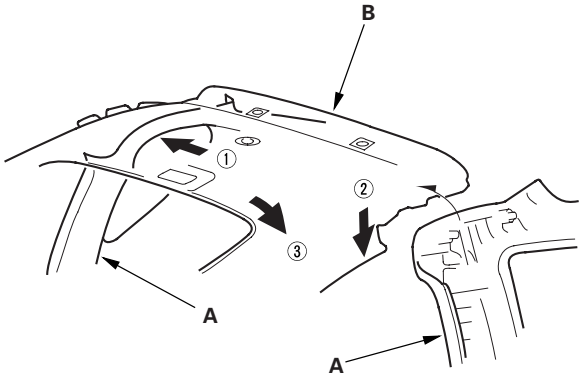

7. Without moonroof: Remove the cushion tapes, then remove the interior harness (A) from the headliner (B).

Fastener Locations

▷ : Cushion tape, 3

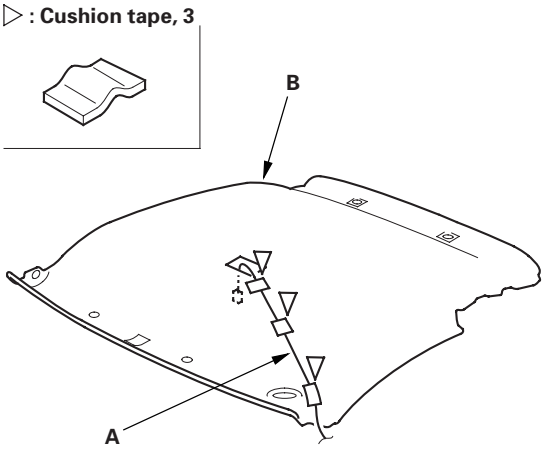

8. Remove the headliner through the hatch opening.

9. Release the roof side pad (A) from the clips (B, C) by sliding it rearward, then remove it.

Fastener Locations

B▷ : Clip, 2 (White) **C▷ : Clip, 1 (Black)**

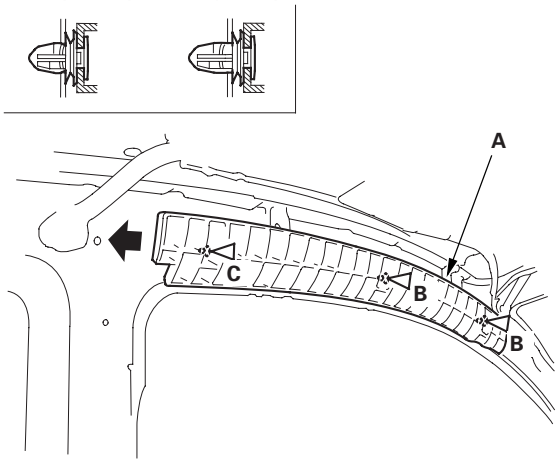

10. Install the headliner in the reverse order of removal, and note these items:

    - When reinstalling the headliner through the hatch opening, be careful not to fold or bend it. Also, be careful not to scratch the body.
    - Using a clip remover, detach the remaining clips from the body, and replace any damaged or stress-whitenings clips . Before reinstalling the roof side pad and headliner, install the clips on the pad and headliner, and fit the clips into the holes in the body, then push on the pad or headliner until the clips snap into place.
    - If the threads on a visor screw are worn out, use an oversized self-tapping ET screw (P/N 90137-S30-003) made specifically for this application.
    - Check that both sides of the headliner are securely attached to the trim.
    - With moonroof: When reinstalling the roof trim (A), install the joint (B) as shown.

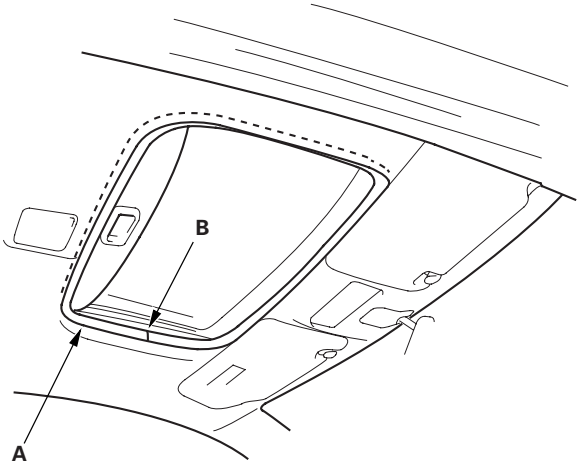

Carpet Replacement

Special Tools Required
KTC trim tool set SOJATP2014

SRS components are located in this area. Review the SRS component locations (see page 23-10) and the precautions and procedures (see page 23-11) before performing repairs or service.

NOTE:
- Put on gloves to protect your hands.
- Use the appropriate tool from the KTC trim tool set to avoid damage when prying components.
- Take care not to damage, wrinkle, or twist the carpet.
- Be careful not to damage the dashboard or other interior trim pieces.

1. Remove these items:

    - Front seats, both sides (see page 20-75)
    - Rear seat cushion (see page 20-85)
    - Center console (see page 20-59)
    - Door sill trim, both sides (see page 20-50)
    - Kick panel, both sides (see page 20-50)
    - Door opening trim, both sides (see page 20-50)
    - Front seat belt lower anchor, both sides (see step 5 on page 23-4)

2. Detach the clips, then remove the footrest (A).

Fastener Locations

▷ : Clip, 2

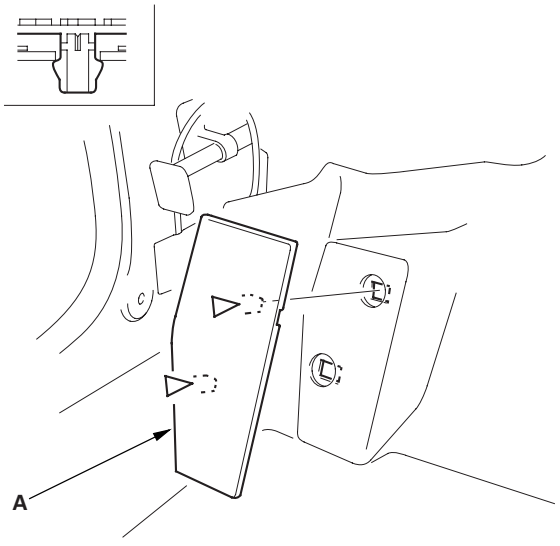

(cont'd)

Carpet Replacement (cont'd)

3. Using a utility knife, cut the carpet (A) at the shift lever area (B) and parking brake lever area (C) as shown.

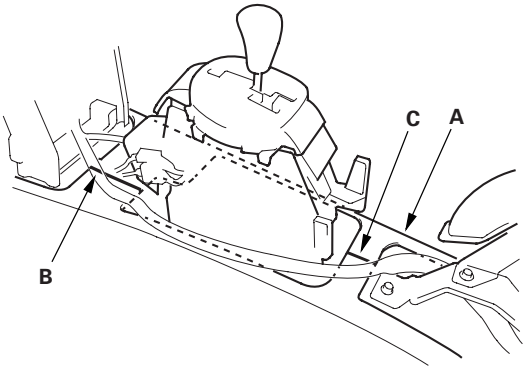

4. Remove the carpet (A).

   –1 Remove the clip.
   –2 Release the fasteners (B), then pull back the carpet from under the dashboard.
   –3 Remove the front lower portions of both rear side trim panels (C) as necessary.
   –4 Pull the carpet out from both rear side trim panels.
   –5 If necessary, remove the floor mat holders (D).

Fastener Location

▷ **: Clip, 1**

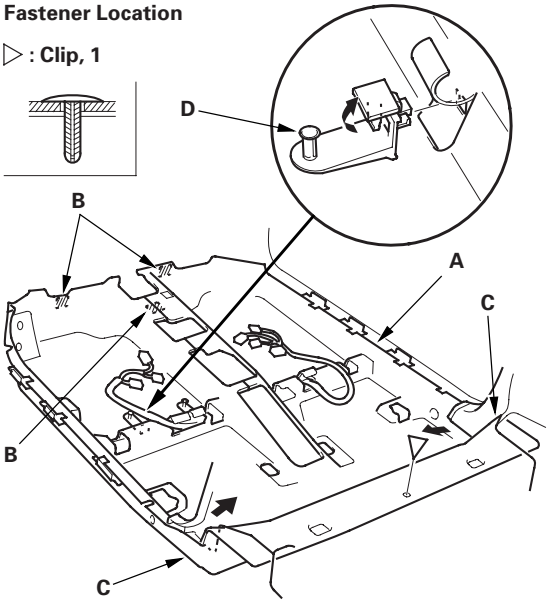

5. Install the carpet in the reverse order of removal, and note these items:

   - Take care not to damage, wrinkle, or twist the carpet.
   - Make sure the seat harnesses are routed correctly.
   - Slip the carpet under the rear side trim panel on each side properly.
   - Replace the clip if it's damaged.
   - Reattach the cut areas at the shift lever and parking brake lever with wire ties.
   - When installing new carpet, cut the carpet at the shift lever and parking brake lever. After installing the new carpet, reattach the cut areas with wire ties.

Center Console Removal/Installation

Special Tools Required
KTC trim tool set SOJATP2014

SRS components are located in this area. Review the SRS component locations (see page 23-10) and the precautions and procedures (see page 23-11) before performing repairs or service.

NOTE:
- Use the appropriate tool from the KTC trim tool set to avoid damage when prying components.
- Take care not to scratch the front seat, dashboard, and related parts.

1. Remove the dashboard center lower cover (see page 20-65).

2. M/T model: Remove the shift knob.

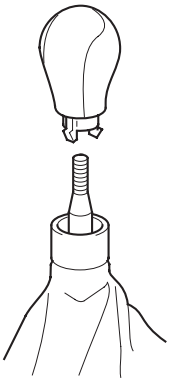

3. A/T model: Remove the shift indicator trim ring.

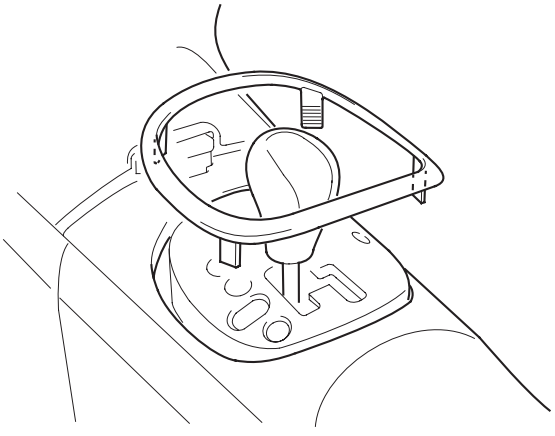

4. Detach the clips, and release the hook (A) by pulling the center console trim (B) up, then remove it. A/T model is shown, M/T model is similar.

Fastener Locations

▷ : **Clip, 6**

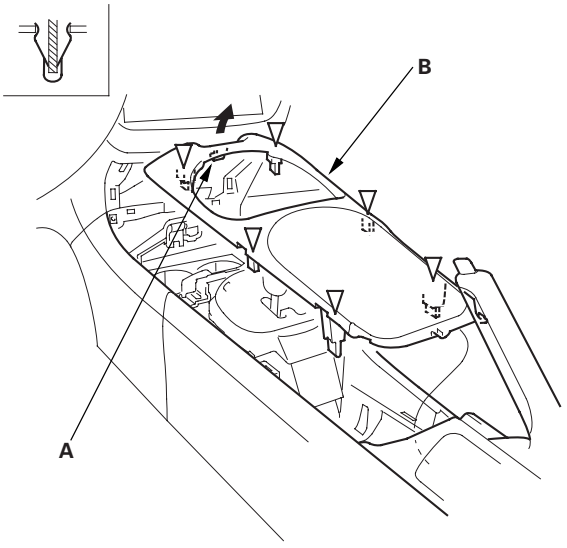

5. Open the console box lid.

6. Detach the clips by pulling the console beverage holder (A) up by hand, then remove it.

Fastener Locations

▷ : **Clip, 4**

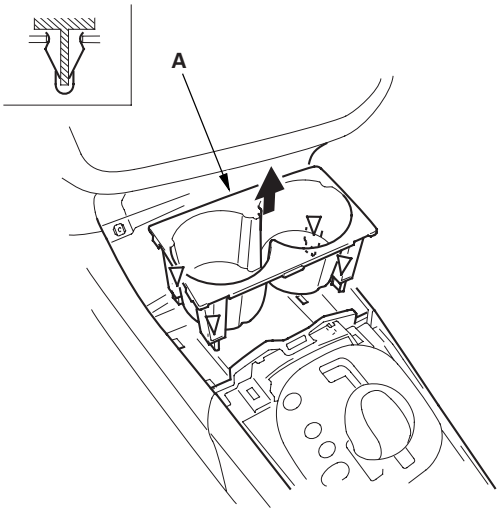

(cont'd)

Center Console Removal/Installation (cont'd)

7. Remove the screws (A) from both console side trim (B), and remove the clips (C) from inside of the console. Then detach the front clips (D) by pulling the trim outward.

Fastener Locations

A▶ : Screw, 2 C▷ : Clip, 2 D▷ : Clip, 4

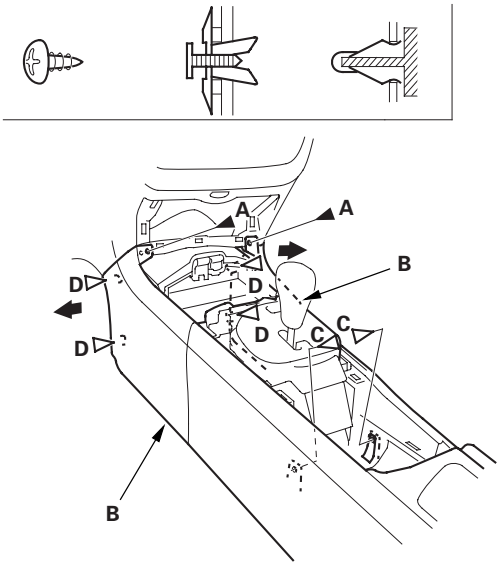

8. Remove the screws from the rear end of the console.

Fastener Locations

▶ : Screw, 2

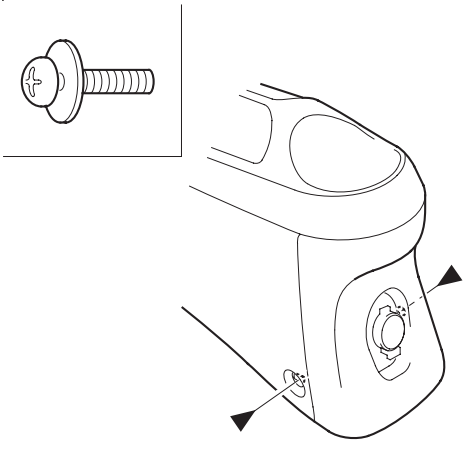

9. Remove the center console (A).

   1. Close the console lid.
   2. Lift up the rear of the console.
   3. Disconnect the accessory power socket connector (B) (for some models).
   4. Pull the console backward to remove it.

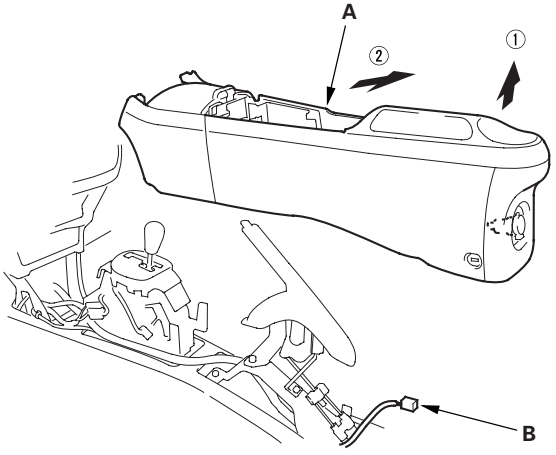

10. Install the console in the reverse order of removal, and note these items:

   - Replace any damaged or stress-whitened clips.
   - Make sure the accessory power socket connector is plugged in properly.
   - Push the clips into place securely.

Center Console Box Replacement

Special Tools Required
KTC trim tool set SOJATP2014

NOTE:
- Use the appropriate tool from the KTC trim tool set to avoid damage when prying components.
- Take care not to scratch the center console.

1. Remove the center console (see page 20-59).

2. Remove the driver's console side trim (A) and passenger's console side trim (B).

   1 Remove the screws (C).
   2 Detach the clips (D) and release the tabs (E).
   3 Open the console box lid. Pull both trim pieces up to release them from the hooks (F).

Fastener Locations

C▶ : Screw, 2 D▷ : Clip, 6

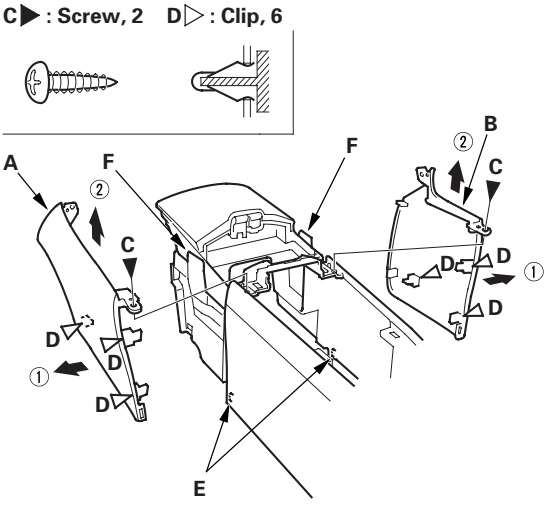

3. Remove the screws (A), and detach the clips (B) by pulling the center console box (C) up, then remove it.

Fastener Locations

A▶ : Screw, 2 B▷ : Clip, 2

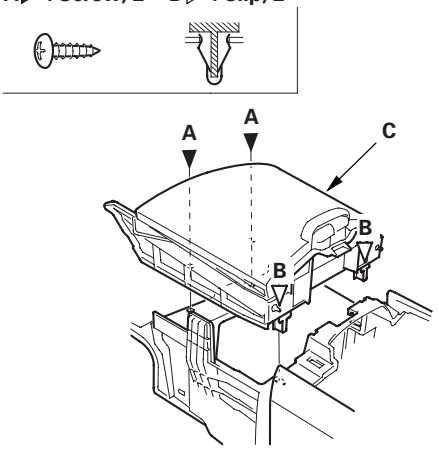

4. Install the box in the reverse order of removal, and note these items:

   - Replace any damaged or stress-whitened clips.
   - Push the clips into place securely.

Center Console Rear Cover Replacement

NOTE: Take care not to scratch the center console.

1. Remove the center console rear cover (A).

   –1 Remove the screws (B) from both sides.
   –2 Detach the clips (C) by pulling the center console rear cover back.
   –3 Disconnect the accessory power socket connector (D) (for some models).

Fastener Locations

B ▶ : Screw, 2 C ▷ : Clip, 2

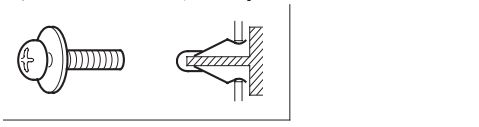

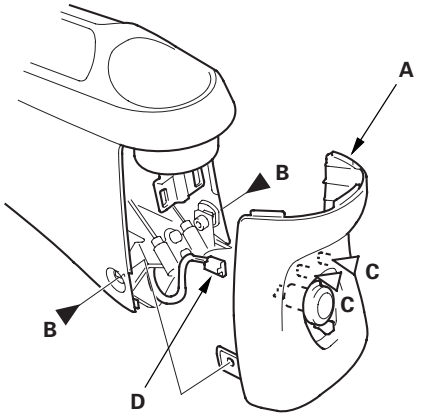

2. Install the cover in the reverse order of removal, and note these items:

   - Replace any damaged or stress-whitened clips.
   - Make sure the accessory power socket connector is plugged in properly.
   - Push the clips into place securely.

Driver's Dashboard Lower Cover Removal/Installation

NOTE: Take care not to scratch the dashboard and related parts.

1. Remove the driver's dashboard lower cover (A).

   –1 Adjust the steering column upward.
   –2 Turn both lock knobs (B) 90 °.
   –3 Gently pull out the bottom to release the hooks (C).
   –4 Pull down the panel to release the hooks (D).

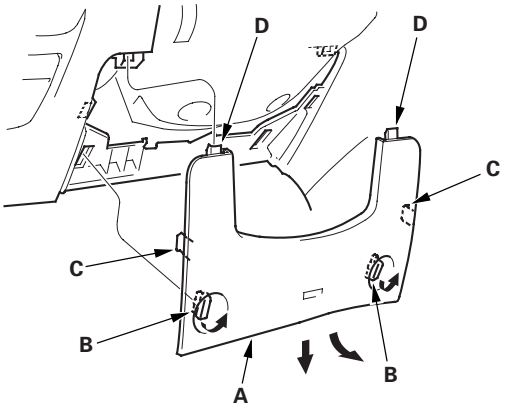

2. Install the cover in the reverse order of removal, and push the hooks into place securely.

Driver's Dashboard Under Cover Removal/Installation

NOTE: Take care not to scratch the dashboard and related parts.

1. Remove the driver's dashboard under cover (A).

   –1 Turn the lock knob (B) 90 °.
   –2 Gently pull down the rear edge to release the clip.
   –3 Pull the cover away to release it from the clip (C).

Fastener Location

▷ : Clip, 1

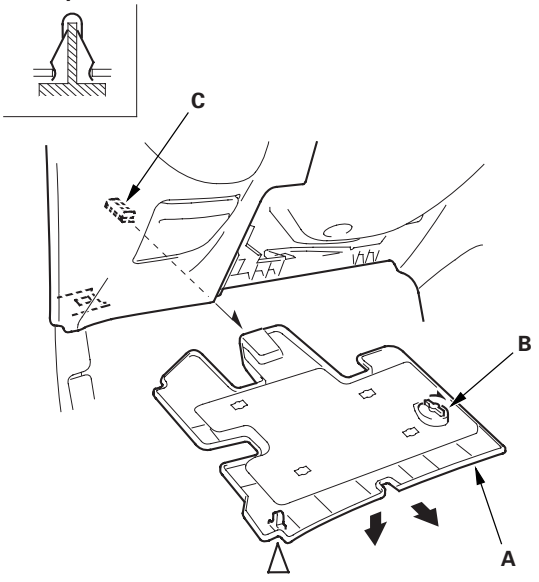

2. Install the cover in the reverse order of removal, and note these items:

   - Replace the clip if it's damaged or stress-whitened clips.
   - Push the clip into place securely.

Driver's Switch Panel Removal/ Installation

Special Tools Required
KTC trim tool set SOJATP2014

NOTE:
- Use the appropriate tool from the KTC trim tool set to avoid damage when prying components.
- Take care not to scratch the dashboard and related parts.

1. Gently pry up on the driver's switch panel (A) to release the hooks (B), then pull out the panel.

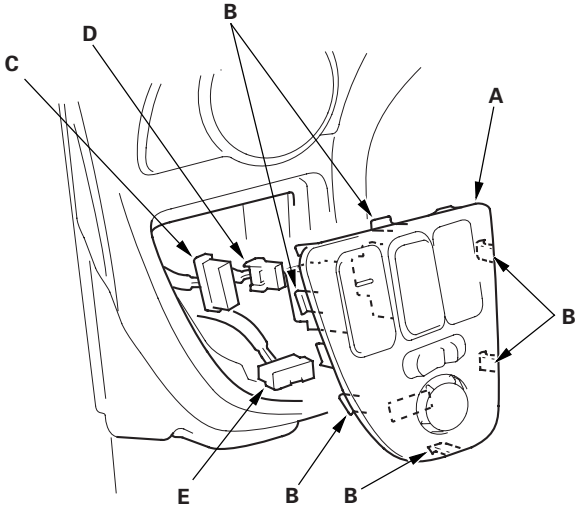

2. If equipped, disconnect the cruise control main switch connector (C), moonroof switch connector (D), and power mirror switch connector (E), then remove the panel.

3. Install the panel in the reverse order of removal, and note these items:

   - Make sure each connector is plugged in properly.
   - Push the hooks into place securely.

Heater Control Panel Removal/ Installation

Special Tools Required
KTC trim tool set SOJATP2014

NOTE:
- Use the appropriate tool from the KTC trim tool set to avoid damage when prying components.
- Take care not to scratch the dashboard and related parts.

1. Gently pry up on the heater control panel (A) to detach the clips (B, C) and to release the hooks (D), then pull out the panel.

Fastener Locations

B▷ : Clip, 3 **C▷ : Clip, 1**

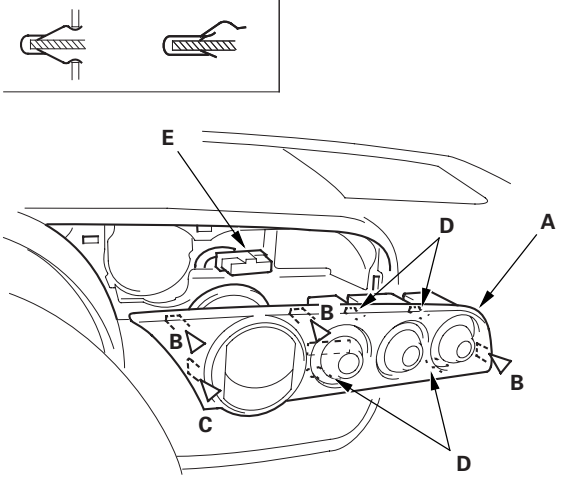

2. Disconnect the climate control unit connector (E), then remove the panel.

3. If necessary, remove the screws securing the driver's center vent (A), then separate it from the heater control panel (B).

Fastener Locations

▶ : Screw, 2

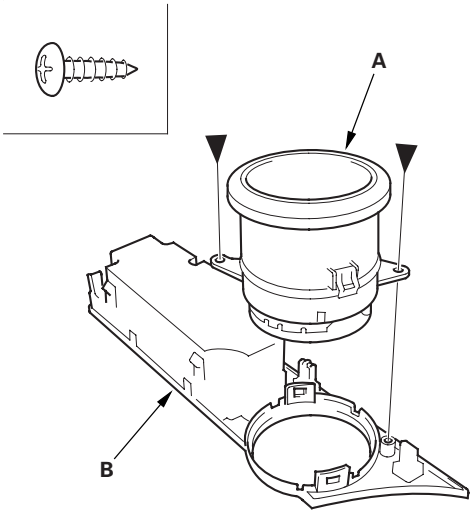

4. Install the panel in the reverse order of removal, and note these items:

   - Make sure the climate control unit connector is plugged in properly.
   - Replace any damaged or stress-whitened clips.
   - Push the clips and hooks into place securely.

Dashboard Center Lower Cover Removal/Installation

Special Tools Required
KTC trim tool set SOJATP2014

NOTE:
- Use the appropriate tool from the KTC trim tool set to avoid damage when prying components.
- Take care not to scratch the dashboard and related parts.

1. Remove the dashboard center lower cover (A).

   –1 Gently pull out the cover to release the clips and hooks (B).
   –2 If equipped, disconnect the accessory power socket connector (C) and seat heater switch connector (D).

Fastener Locations

▷ : Clip, 3

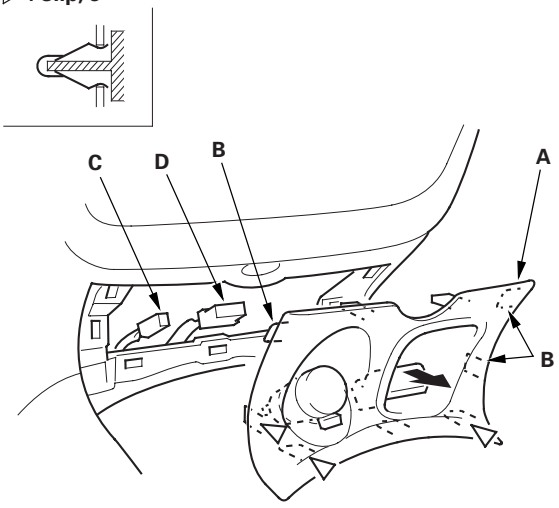

2. Install the cover in the reverse order of removal, and note these items:

   - If equipped, make sure the accessory power socket connector and seat heater switch connector are plugged in properly.
   - Replace any damaged or stress-whitened clips.
   - Push the clips and hooks into place securely.

Center Panel Removal/Installation

Special Tools Required
KTC trim tool set SOJATP2014

NOTE:
- Use the appropriate tool from the KTC trim tool set to avoid damage when prying components.
- Take care not to scratch the dashboard and related parts.

1. Remove the dashboard center lower cover (see page 20-65).

2. Make sure you have the anti-theft code for the radio, then write down the frequencies for the preset buttons.

3. Remove the center panel (A).

   –1 Remove the bolts (B) from the dashboard center lower cover opening.
   –2 Gently pull out along the bottom to release the lower clips (C, D), then along both sides and top to release the remaining clips (C).
   –3 Disconnect the hazard warning switch connector (E), audio unit connector (F), and antenna lead (G).

Fastener Locations

B ▶ : Bolt, 2 C ▷ : Clip, 3 D ▷ : Clip, 3

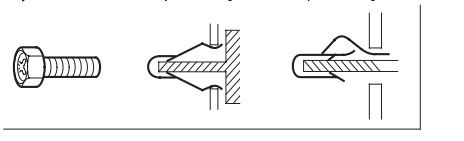

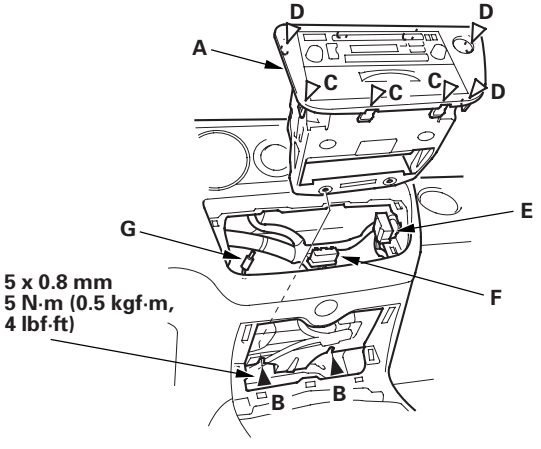

4. Install the panel in the reverse order of removal, and note these items:

   - Make sure each connector is plugged in properly and antenna lead is connected properly.
   - Enter the anti-theft code for the radio, then enter the customer's radio station presets.
   - Replace any damaged or stress-whitened clips.
   - Push the clips into place securely.
   - Reset the clock.
   - '02-04 models: Do the ECM/PCM idle learn procedure (see page 11-349).

Passenger's Dashboard Lower Cover Removal/Installation

NOTE: Take care not to scratch the dashboard and related parts.

1. Remove the passenger's dashboard lower cover (A).

   –1 Remove the clips.
   –2 Pull down the edge nearest the glove box.
   –3 Pull the cover away to release it from the holders (B).

Fastener Locations

▷ : **Clip, 3**

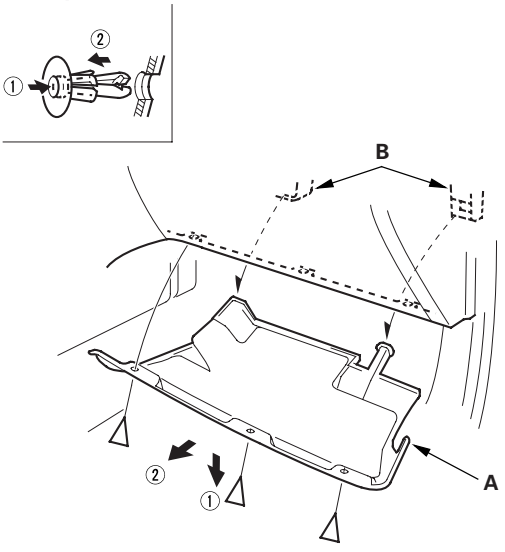

2. Install the cover in the reverse order of removal, and note these items:

   - Replace any damaged or stress-whitened clips.
   - Push the clips into place securely.

Glove Box Removal/Installation

SRS components are located in this area. Review the SRS component locations (see page 23-10) and the precautions and procedures (see page 23-11) before performing repairs or service.

NOTE: Take care not to scratch the dashboard and related parts.

1. Remove the passenger's dashboard lower cover.

2. While holding the glove box (A), remove the glove box stop (B) on each side.

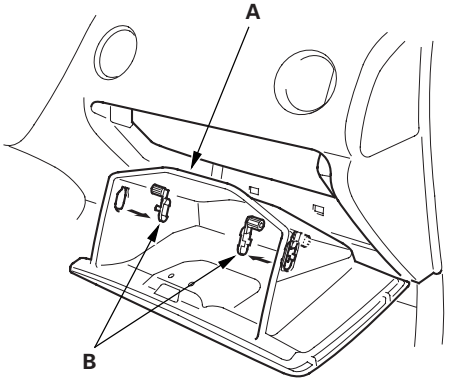

3. Remove the bolts, then remove the glove box.

Fastener Locations

▶ : **Bolt, 2**

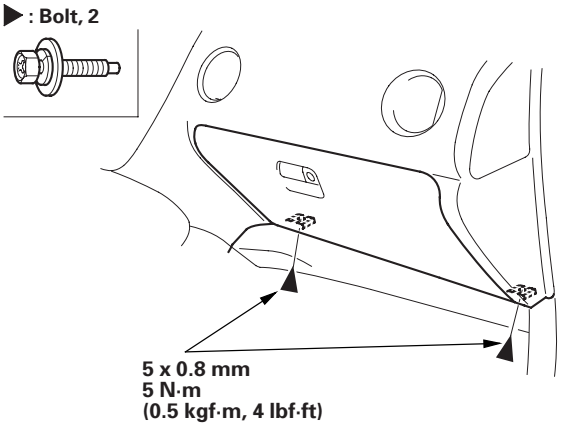

4. Install the glove box in the reverse order of removal.

Driver's Side Vent Panel Removal/ Installation

Special Tools Required
KTC trim tool set SOJATP2014

NOTE:
- Use the appropriate tool from the KTC trim tool set to avoid damage when prying components.
- Take care not to scratch the dashboard and related parts.

1. Gently pry up on the driver's side vent panel (A) to detach the clips (B, C), then pull out and remove it.

Fastener Locations

B ▷ : Clip, 2 **C ▷ : Clip, 2**

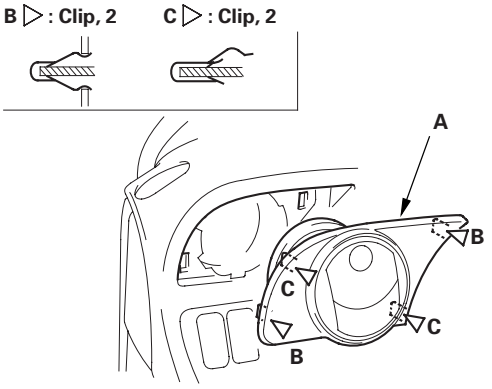

2. If necessary, remove the screws securing the driver's side vent (A), then separate it from the panel (B).

Fastener Locations

▶ : Screw, 2

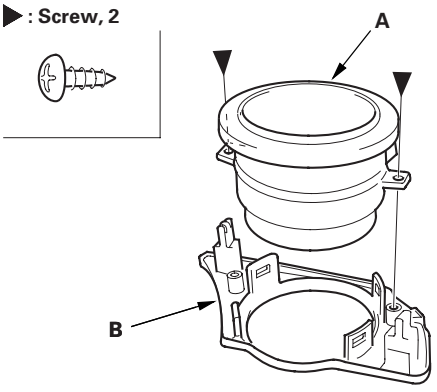

3. Install the panel in the reverse order of removal, and note these items:

   - Replace any damaged or stress-whitened clips.
   - Push the clips into place securely.

Passenger's Side Vent Removal/ Installation

NOTE:
- Put on gloves to protect your hands.
- Take care not to scratch the dashboard and related parts.

1. Remove the glove box (see page 20-67).

2. Remove the screws securing the passenger's vent (A) and the air conditioner duct (B), and the screws securing the passenger's vent to the dashboard.

Fastener Locations

▶ : Screw, 3

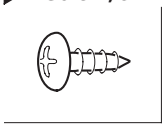

Center

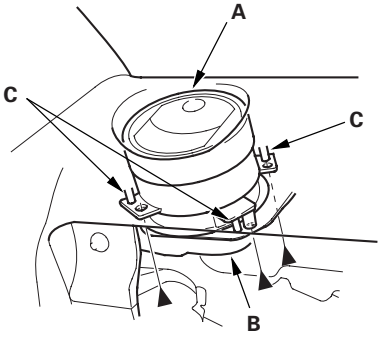

Side

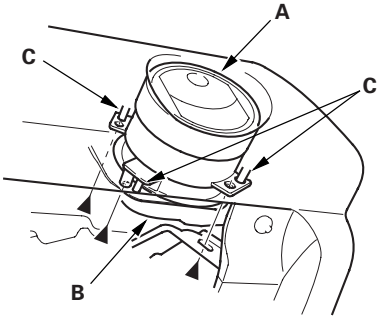

3. Install the vent in the reverse order of removal, and note these items:

   - When installing the vent, wrap its panel surface with tape to prevent damage.
   - Align the holes in the vent with the pins (C) on the dashboard.

Dashboard/Steering Hanger Beam Removal/Installation

Special Tools Required
KTC trim tool set SOJATP2014

SRS components are located in this area. Review the SRS component locations (see page 23-10) and the precautions and procedures (see page 23-11) before performing repairs or service.

NOTE:
- Use the appropriate tool from the KTC trim tool set to avoid damage when prying components.
- Have an assistant help you when removing and installing the dashboard/steering hanger beam.
- Take care not to scratch the dashboard, body, and other related parts.
- Put on gloves to protect your hands.

1. Before removing the heater control panel, turn the ignition switch ON (II), and turn the mode switch of the heater control switch in HEAT position.

2. Turn the ignition switch OFF.

3. Make sure you have the anti-theft code for the radio, then write down the frequencies for the preset buttons.

4. Disconnect the negative cable from the battery, and wait at least 3 minutes before beginning work.

5. Remove these items:

   - Center console (see page 20-59)
   - Driver's dashboard lower cover (see page 20-63)
   - Driver's dashboard under cover (see page 20-63)
   - Passenger's dashboard lower cover (see page 20-67)
   - Glove box (see page 20-67)
   - Kick panels, both sides (see page 20-50)
   - A-pillar trim, both sides (see page 20-50)
   - Steering column (see page 17-25)

6. From outside of the passenger's door, gently pry up on the bottom of the dashboard side cover (A) to release the lower clip (B) and hook (C), then release the remaining clip (D) and hooks (E) to remove the cover.

Fastener Locations
B, D ▷ : Clip, 2

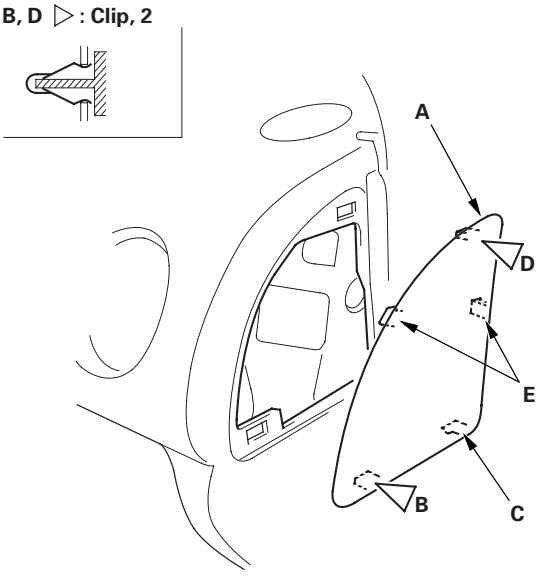

(cont'd)

Dashboard/Steering Hanger Beam Removal/Installation (cont'd)

Driver's side

7. From under the dash, disconnect the interior wire harness connector (A), driver's door wire harness connectors (B), wiper subwire harness connectors (C), antenna lead (D), clutch pedal position switch connector (E) (on M/T model), and brake pedal position switch connector (F), and disconnect the floor wire harness connectors (G) and engine compartment wire harness connectors (H) from the under-dash fuse/relay box (I).

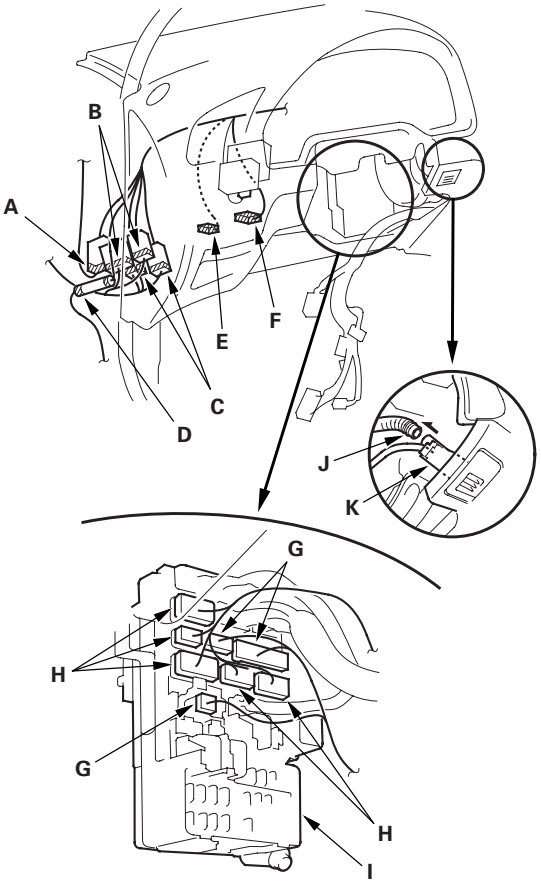

8. Disconnect the air hose (J) from the in-car temperature sensor (K).

Middle portion

9. From the driver's side, disconnect the SRS control unit connector (A), floor wire harness connectors (B), and engine compartment wire harness connectors (C), and using a T30 Torx bit, remove the ground bolt (D). On the A/T model, disconnect the parking pin shift connector (E) and shift lock solenoid connector (F).

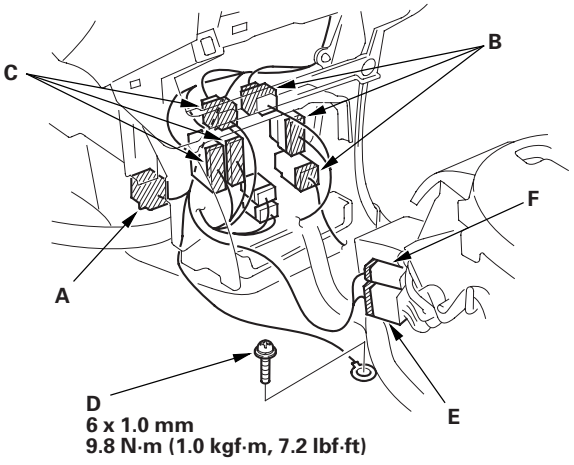

Passenger's side

10. From under the dash, disconnect the ECM/PCM connectors (A), engine wire harness connector (B), A/C subharness connectors (C), passenger's door wire harness connector (D), and front sensor wire harness connector (E).

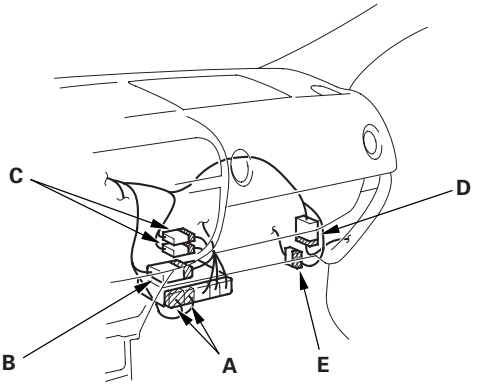

11. Detach all of the harness and connector clips.

12. From outside the driver's door, remove the caps (A), then remove the bolts (B, C, D), and lift up on the dashboard/steering hanger beam (E) to release it from the guide pins (F, G) and hook (H).

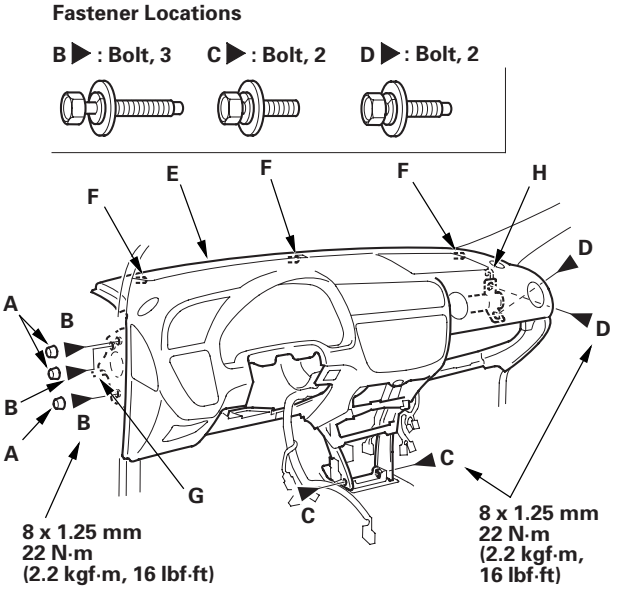

13. Carefully remove the dashboard/steering hanger beam through the door opening.

14. Install the dashboard/steering hanger beam in the reverse order of removal, and note these items:

- Make sure the dashboard/steering hanger beam fits onto the guide pins correctly.
- Apply liquid thread lock to the dashboard mounting bolts of the middle portion before reinstallation.
- Before tightening the bolts, make sure the wire harnesses are not pinched.
- Make sure the connectors are plugged in properly, and the antenna lead is connected properly.
- Reconnect the negative cable to the battery.
- Enter the anti-theft code for the radio, then enter the customer's radio station presets.
- Reset the clock.
- Do the ECM/PCM idle learn procedure, '02-04 models (see page 11-349), '05-06 models (see page 11-349) and the power window control unit reset procedure (see page 22-148).

Dashboard/Steering Hanger Beam Disassembly/Reassembly

NOTE: Put on gloves to protect your hands.

1. Remove dashboard/steering hanger beam (see page 20-69).

2. Remove these items from the dashboard:

- Driver's switch panel (see page 20-64)
- Center panel (see page 20-66)
- Heater control panel (see page 20-64)
- Gauge assembly (see page 22-74)
- Passenger's airbag (see page 23-132)
- Sunlight sensor (see page 21-43)

3. From outside of the driver's side, gently pull out on the bottom of the dashboard side cover (A) to release the lower clip (B) and hook (C), then release the remaining clip (D) and hooks (E) to remove the cover.

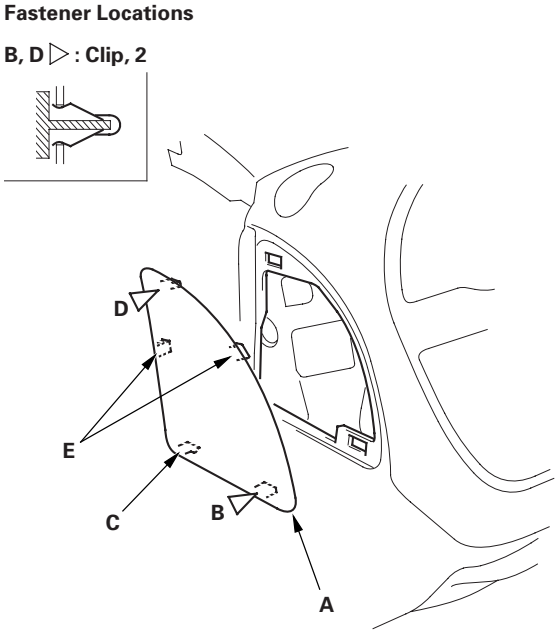

(cont'd)

Dashboard/Steering Hanger Beam Disassembly/Reassembly (cont'd)

4. Detach the harness holder (A) from the back of the driver's switch panel area.

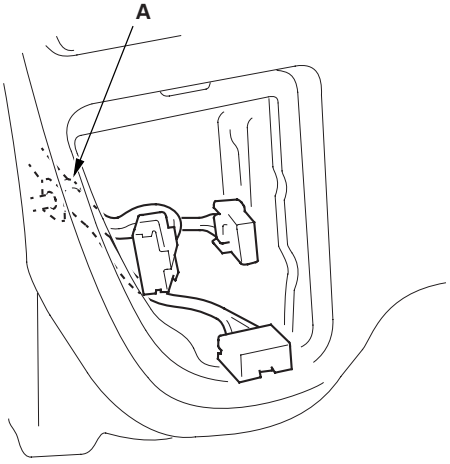

5. Disconnect and detach the center console light connector (A) and in-car temperature sensor connector (B). Unclip the wire harness (C).

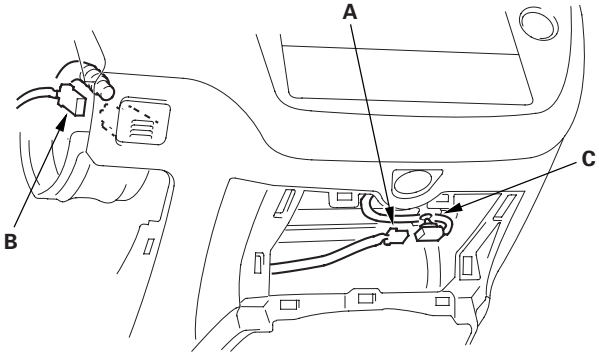

6. If equipped, disconnect the glove box light connector (A) and unclip the harness.

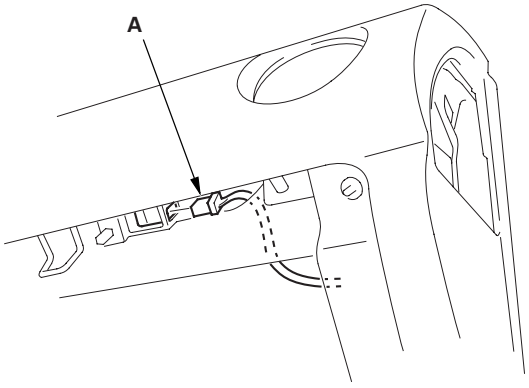

7. If equipped, disconnect the tweeter connector (A), and detach the harness clip (B) from both sides.

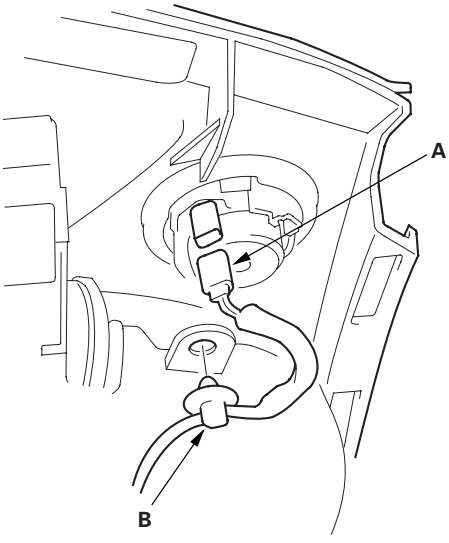

8. Detach the harness holder (A), and remove the cushion tape (B) for the sunlight sensor harness (C).

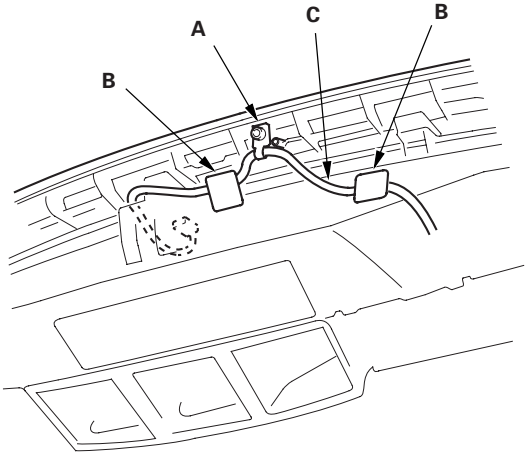

9. Remove the bolts (A) and screws (B) securing the dashboard (C) and steering hanger beam (D), and separate the dashboard and steering hanger beam.

Fastener Locations

A ▶ : Bolt, 6 **B ▶ : Screw, 9**

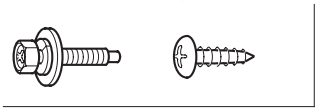

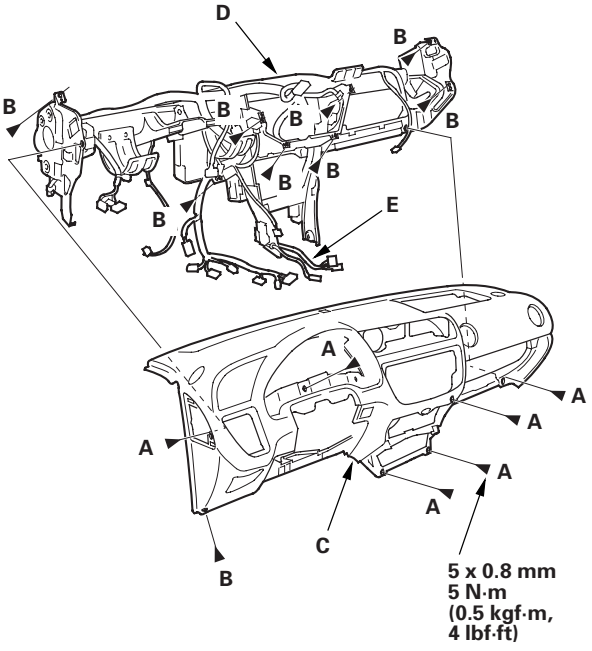

10. Reassemble the dashboard and steering hanger beam in the reverse order of disassembly, and note these items:

- Make sure the dashboard wire harness (E) is not pinched.
- Make sure the connectors are plugged in properly.

Component Location Index

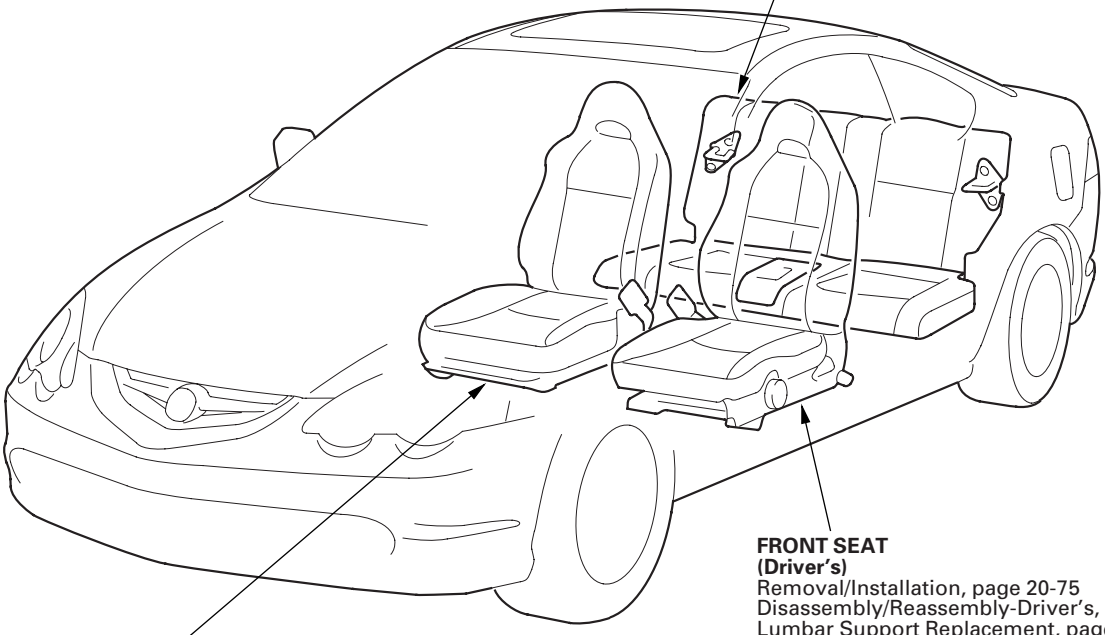

REAR SEAT
Removal/Installation, page 20-85
Seat-back Pivot Bracket Replacement, page 20-86
Seat-back Striker Replacement, page 20-86
Seat-back Latch Replacement, page 20-87
Seat-back Cover Replacement, page 20-87
Seat Cushion Cover Replacement, page 20-89

FRONT SEAT
(Driver's)
Removal/Installation, page 20-75
Disassembly/Reassembly-Driver's, page 20-77
Lumbar Support Replacement, page 20-83
Seat Cover Replacement, page 20-79

FRONT SEAT
(Passenger's)
Removal/Installation, page 20-75
Disassembly/Reassembly-Passenger's, page 20-78
Seat Cover Replacement, page 20-79

Front Seat Removal/Installation

Special Tools Required
KTC trim tool set SOJATP2014

SRS components are located in this area. Review the SRS component locations (see page 23-10) and the precautions and procedures (see page 23-11) before performing repairs or service.

NOTE:
- Use the appropriate tool from the KTC trim tool set to avoid damage when prying components.
- Take care not to scratch the body or tear the seat covers.
- Put on gloves to protect your hands.

1. Make sure you have the anti-theft code for the radio, then write down the frequencies for the preset buttons.

2. Disconnect the negative cable from the battery, and wait at least 3 minutes before beginning work.

3. Remove the seat track end covers (A) from the back of both seat tracks.

Outer

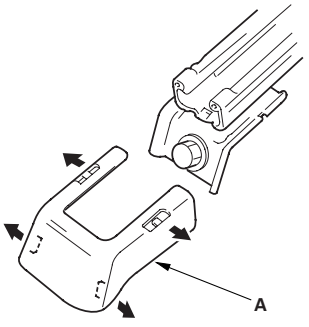

Inner

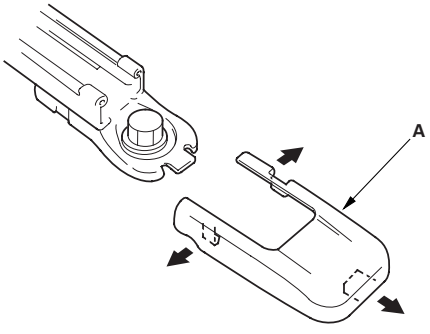

4. Remove the bolts securing the front seat (A).

Fastener Locations

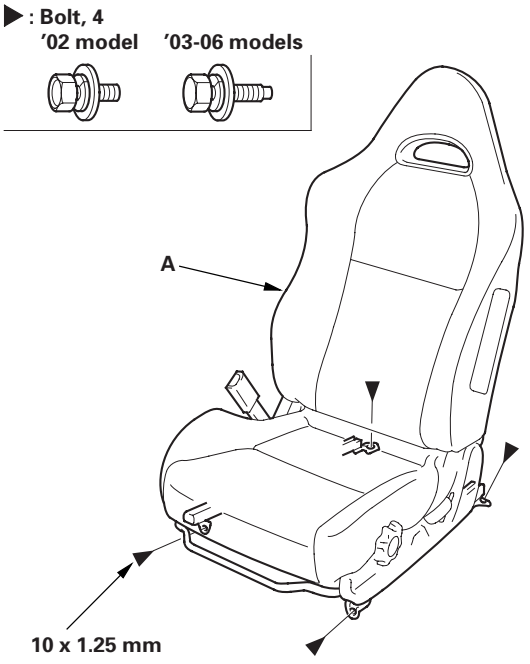

(cont'd)

Front Seat Removal/Installation (cont'd)

5. Lift up the front seat, then detach the harness clips (A), and disconnect the seat belt switch connector (B), seat belt buckle tensioner connector (C), and side airbag connector (D), and on the passenger's seat, disconnect the OPDS unit connector (E). If equipped, disconnect the seat heater connector (F). If equipped with BOSE sound system, remove the nuts, then remove the front stereo amplifier (G) from the seat cushion, and disconnect the subharness connector (H), seat belt buckle tensioner connector (I), and side airbag connector (J). The passenger's seat is shown, the driver's seat is similar except it has no OPDS unit connector.

Passenger's seat

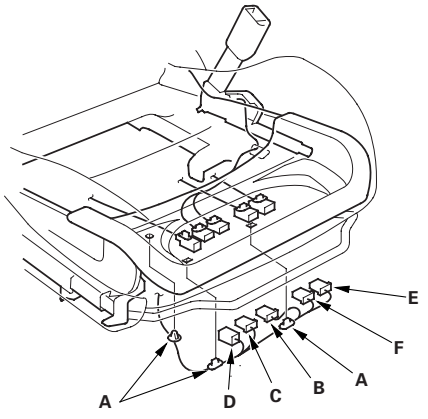

Passenger's seat with BOSE sound system

Fastener Locations

● : Nut, 2

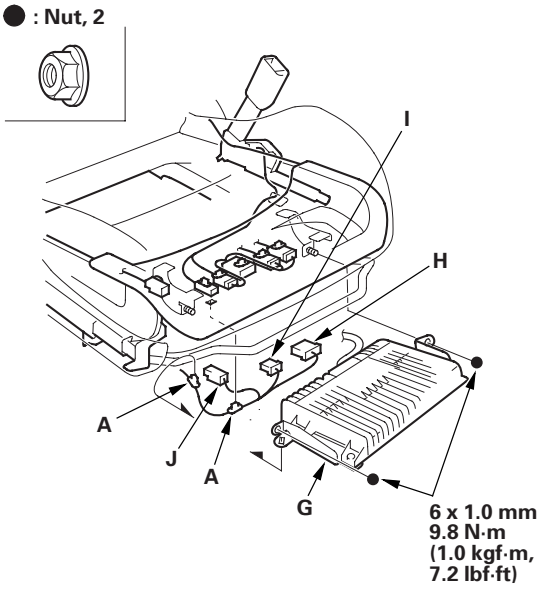

6. With the help of an assistant, carefully remove the front seat through the door opening.

7. Install the seat in the reverse order of removal, and note these items:

   - Make sure each connector is plugged in properly.
   - Apply liquid thread lock to the seat mounting bolts before reinstallation.
   - Tighten the seat mounting bolts to the specified torque in the sequence shown. Slide the seat all the way back and tighten ① and ②, then slide it forward and tighten ③ and ④.
   - Reconnect the negative cable to the battery.
   - Enter the anti-theft code for the radio, then enter the customer's radio station presets.
   - Reset the clock.
   - '02-04 models: Do the ECM/PCM idle learn procedure (see page 11-349).
   - Do the power window control unit reset procedure (see page 22-148).

Fastener Locations

▶ : Bolt, 4

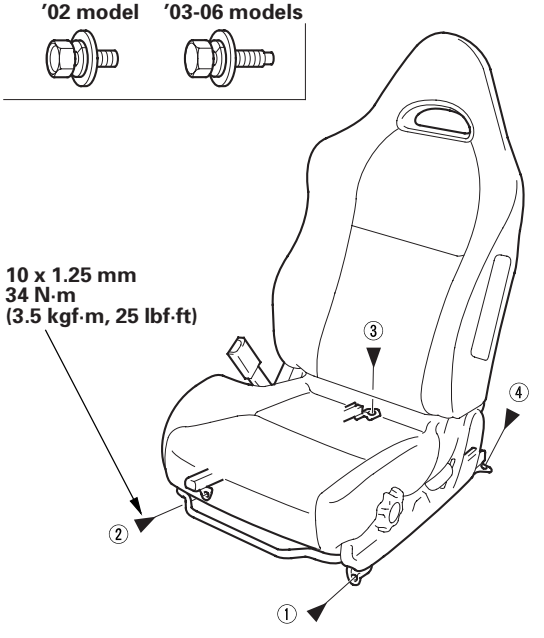

Front Seat Disassembly/Reassembly - Driver's

Special Tools Required
KTC trim tool set SOJATP2014

SRS components are located in this area. Review the SRS component locations (see page 23-10) and the precautions and procedures (see page 23-11) before performing repairs or service.

NOTE:
- Take care not to tear the seams or damage the seat covers.
- Put on gloves to protect your hands.
- Use the appropriate tool from the KTC trim tool set to avoid damage when prying components.
- To remove the recline cover on the driver's seat without manual height adjustment, refer to Front Seat Disassembly/Reassembly-Passenger's (see page 20-78).
- For seat cushion removal and installation procedures, refer to Front Seat Cover Replacement (see step 2 on page 20-79).
- Apply multipurpose grease to the moving portion of the seat track.
- To prevent wrinkles in the seat cushion cover, stretch the material evenly over the pad.
- Replace any damaged or stress-whitened clips.
- Push the cover clips into place securely.

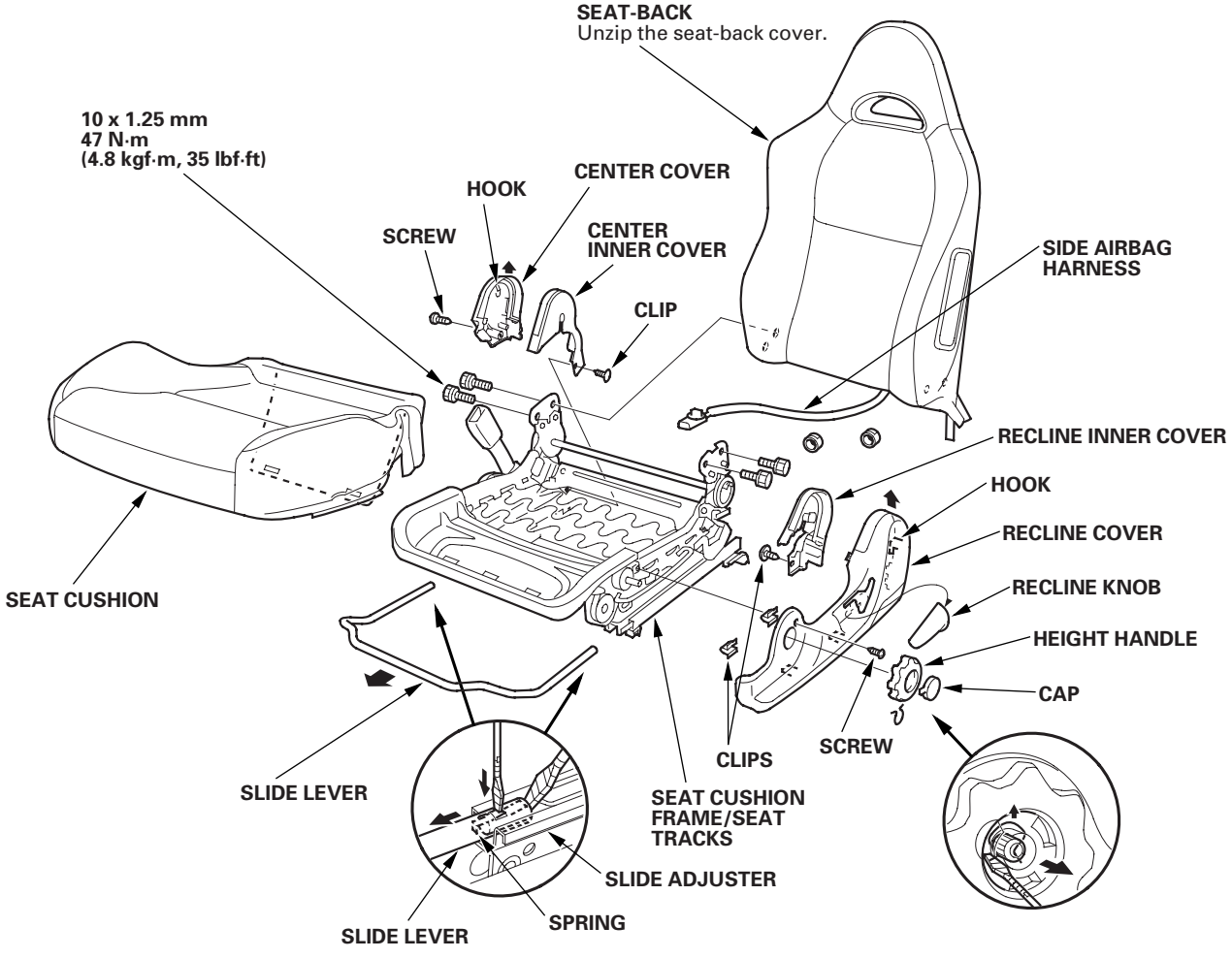

Front Seat Disassembly/Reassembly - Passenger's

Special Tools Required
KTC trim tool set SOJATP2014

SRS components are located in this area. Review the SRS component locations (see page 23-10) and the precautions and procedures (see page 23-11) before performing repairs or service.

NOTE:
- Take care not to tear the seams or damage the seat covers.
- Put on gloves to protect your hands.
- Use the appropriate tool from the KTC trim tool set to avoid damage when prying components.
- For seat cushion removal and installation procedures, refer to Front Seat Cover Replacement (see step 2 on page 20-79).
- Apply multipurpose grease to the moving portion of the seat track.
- To prevent wrinkles in the seat cushion cover, stretch the material evenly over the pad.
- Adjust the rear seat access cable.
- Make sure the rear seat access cable is connected properly on each portion.
- Replace any damaged or stress-whitened clips.
- Push the cover clips into place securely.

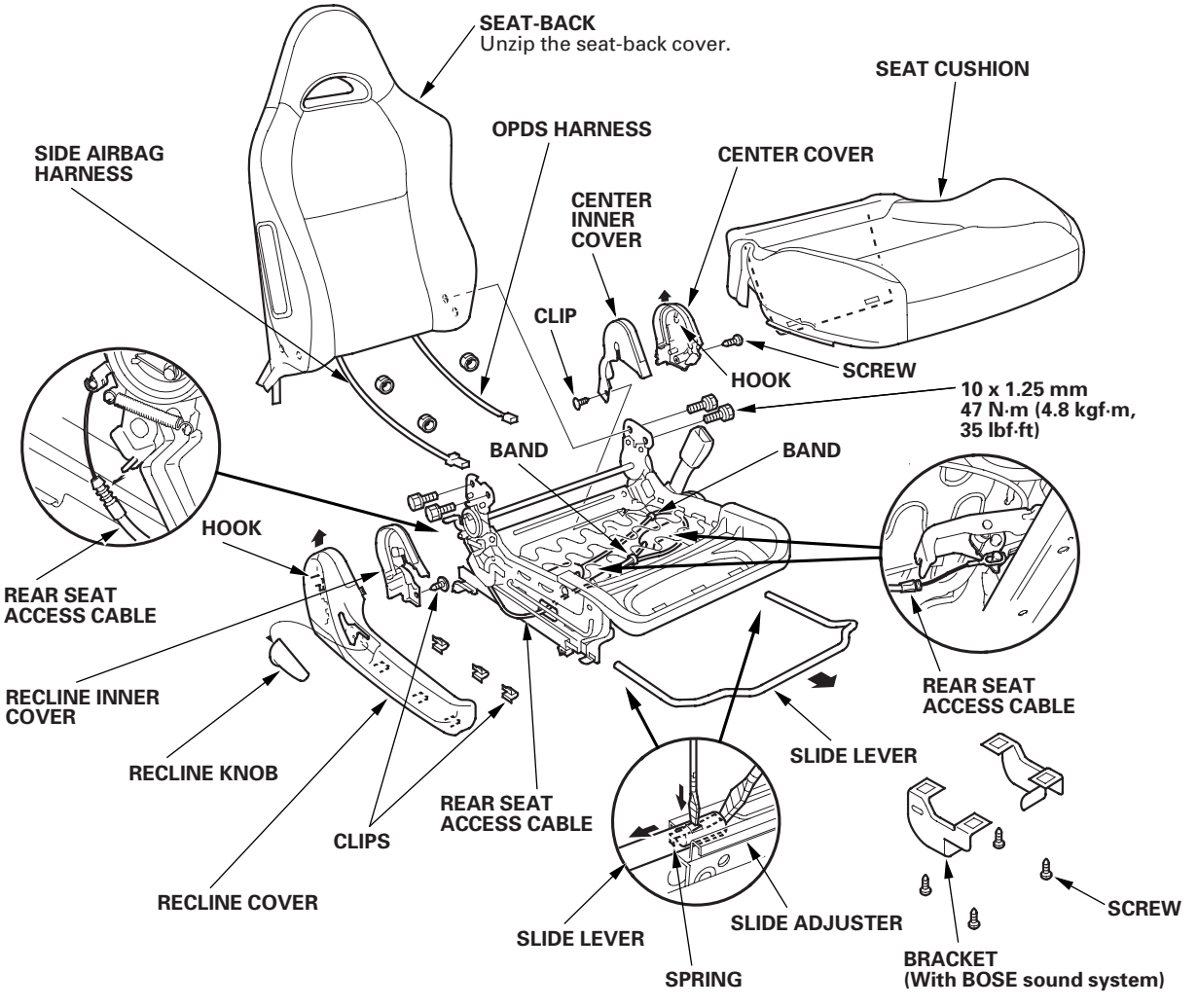

Front Seat Cover Replacement

Special Tools Required
KTC trim tool set SOJATP2014

SRS components are located in this area. Review the SRS component locations (see page 23-10) and the precautions and procedures (see page 23-11) before performing repairs or service.

NOTE:
- Take care not to tear the seams or damage the seat covers.
- Use the appropriate tool from the KTC trim tool set to avoid damage when prying components.
- On the passenger's seat with side airbag, do not touch the OPDS sensor in the seat-back pad, and keep it away from oil. Oil can corrode the sensor, causing it to fail.
- Put on gloves to protect your hands.

Seat-back Cover

1. Remove the front seat (see page 20-75).

2. From under the seat cushion, detach the side airbag connector clip (A), and on the passenger's seat, detach the OPDS unit connector clip (B). Release the seat cushion cover (C) from the seat cushion frame spring (D), then pull the cover back, and remove the harness bands (E). The passenger's seat is shown, the driver's seat is symmetrical except it has no OPDS unit connector.

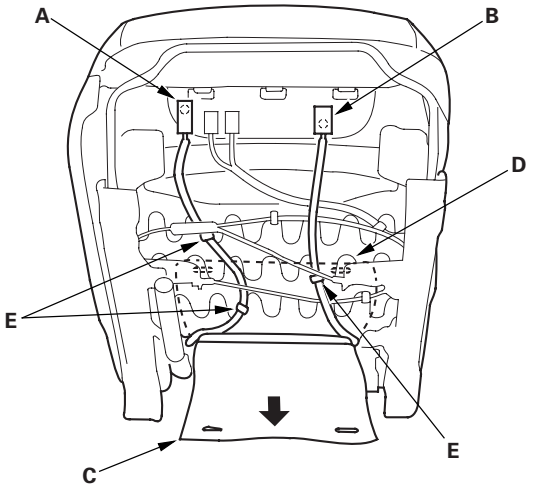

3. Fold the seat-back forward.

4. If equipped with a lumbar support, remove the clip (A), then remove the lumbar support handle (B).

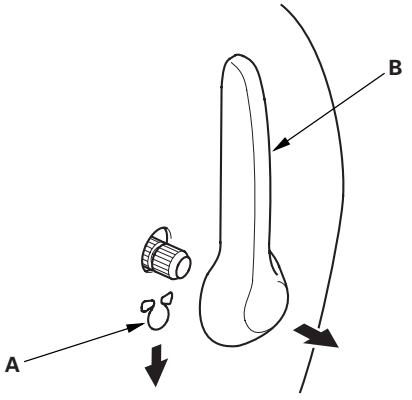

5. Detach the hooks (A), then remove the front headrest trim (B) and rear headrest trim (C).
For '02-04 models: Pull back the seat-back cover (D).

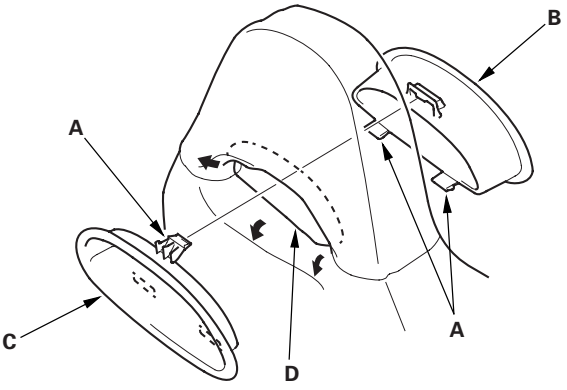

(cont'd)

Front Seat Cover Replacement (cont'd)

6. '05-06 models: Release the hooks (A), and release the seat-back cover (B) from the wire loop (C) on the seat-back frame. Release the fasteners (D), and then pull back the seat-back cover.

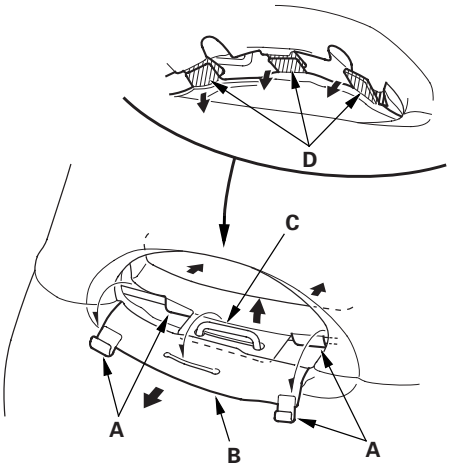

7. Release the hook (A), and unzip the seat-back cover (B). Pull the side airbag harness (C) and the OPDS harness (D) (passenger's seat) out through the holes (E) in the seat cushion cover. The passenger's seat is shown, the driver's seat is symmetrical except it has no OPDS harness.

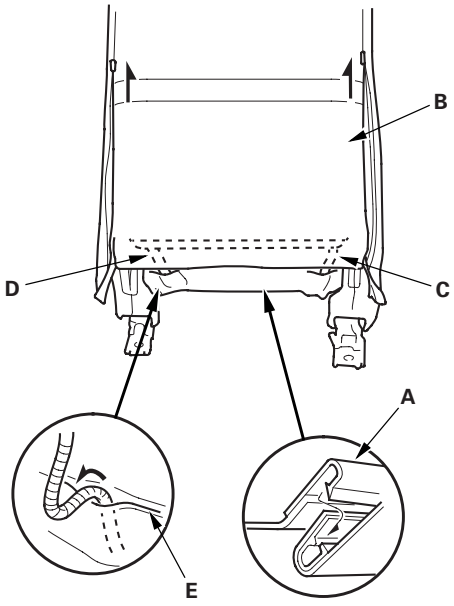

8. Remove the side airbag (see page 23-134), and release the hooks (A) from the airbag module holder (B).

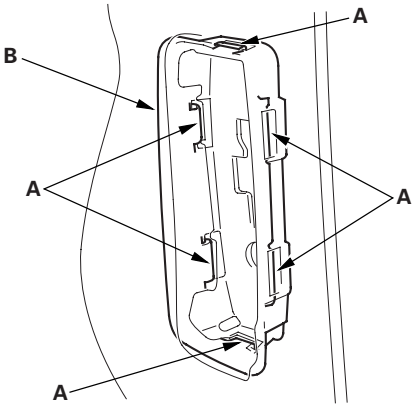

9. Pull back the edge of the seat-back cover (A) all the way around, and release the clips (B), then remove the seat-back cover.

'02-04 models

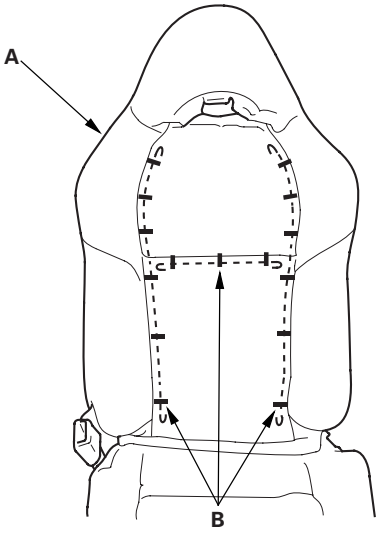

’05-06 models

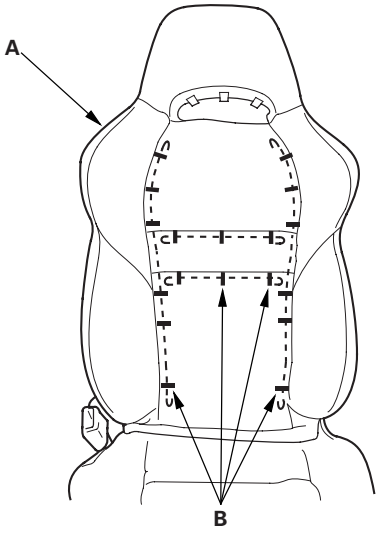

10. Install the cover in the reverse order of removal, and note these items:

    - To prevent wrinkles when installing a seat-back cover, make sure the material is stretched evenly over the pad before securing the hooks, fasteners (’05-06 models), and clips.
    - Make sure the side airbag harness and OPDS harness (passenger’s seat) are routed properly.
    - Replace any clips you removed with new ones. Install them with commercially available upholstery ring pliers.
    - If necessary, reinitialize the OPDS control unit (see page 23-24).
    - Always use the proper replacement cover; never install an aftermarket cover.

Seat Cushion Cover

1. Remove the front seat (see page 20-75).

2. Remove these items from the front seat:

    - Recline cover, driver’s seat (see page 20-77), passenger’s seat (see page 20-78)
    - Front seat belt buckle (see step 5 on page 23-5)

3. From under the seat cushion, detach the side airbag connector clip, and on the passenger’s seat, detach the OPDS unit connector clip. Release the seat cushion cover from the seat cushion frame spring, then pull the cover back, and remove the harness bands.

4. Release the hook, and unzip the seat-back cover. Pull the side airbag harness and the OPDS harness (passenger’s seat) out through the holes in the seat cushion cover.

5. Remove the clip, and release the hooks (A).

Inside

Fastener Location

▷ : Clip, 1

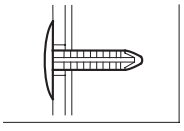

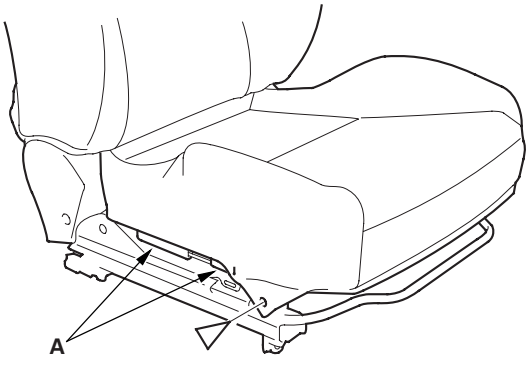

(cont’d)

Front Seat Cover Replacement (cont'd)

Outside

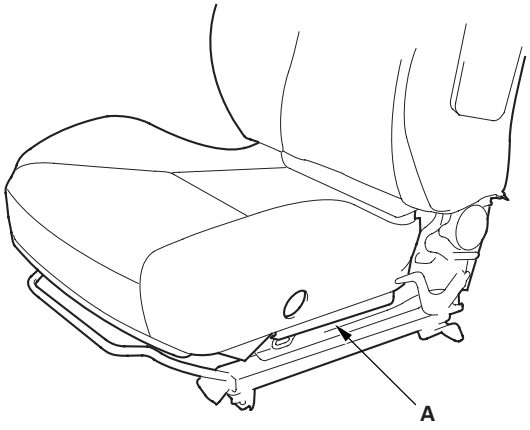

6. From under the seat cushion, release the hooks (A). If equipped with a seat heater, detach the seat cushion heater connector clip (B), and remove the harness band (C).

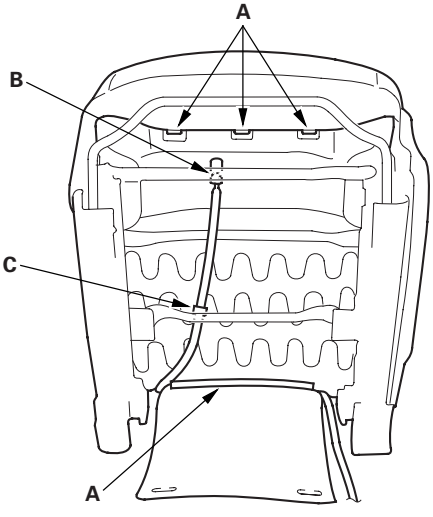

7. Remove the seat cushion cover (A) with the seat cushion pad from the seat cushion frame.

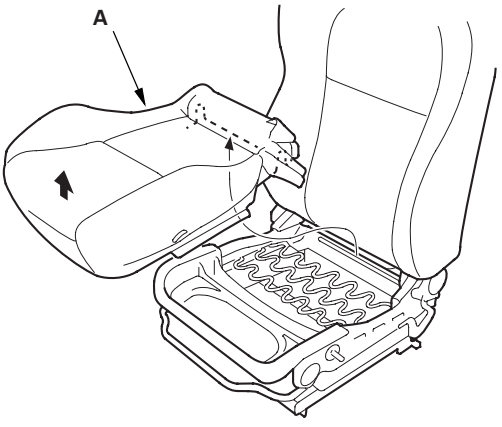

8. Pull back the edge of the seat cushion cover all the way around, and release the clips (A), then remove the seat cushion cover (B).

'02-04 models

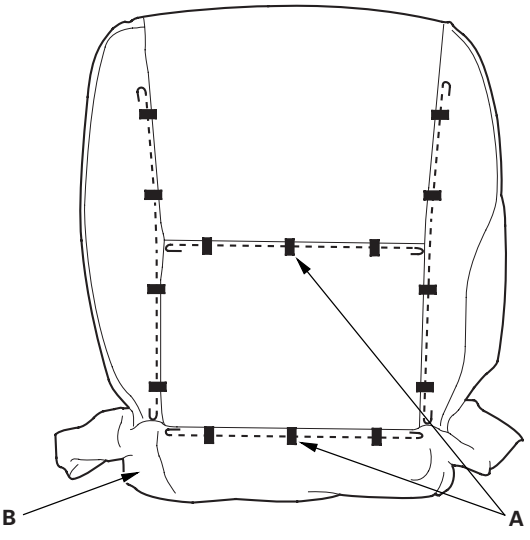

’05-06 models

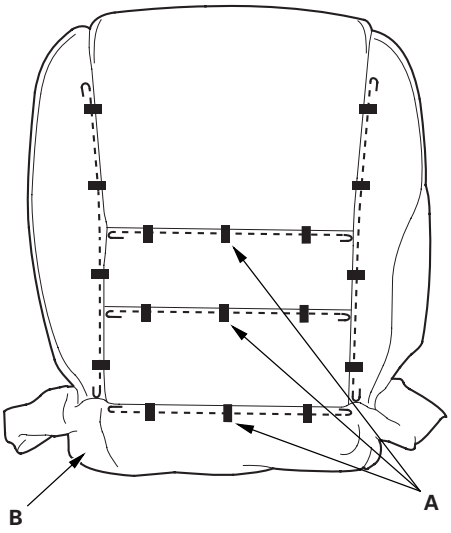

9. Install the cover in the reverse order of removal, and note these items:

   - To prevent wrinkles when installing a seat cushion cover, make sure the material is stretched evenly over the pad before securing the clips and hooks.
   - Make sure the side airbag harness and OPDS harness (passenger’s seat) are routed properly.
   - Replace any clips you removed with new ones (A). Install them with commercially available upholstery ring pliers (B).

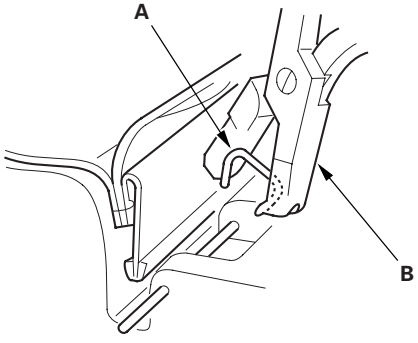

Front Seat Lumbar Support Replacement

For Some Models (Driver’s seat)

SRS components are located in this area. Review the SRS component locations (see page 23-10) and the precautions and procedures (see page 23-11) before performing repairs or service.

NOTE:
- Take care not to tear the seams or damage the seat covers.
- Put on gloves to protect your hands.

1. Remove the front seat (see page 20-75).

2. From under the seat cushion, detach the side airbag connector clip. Release the seat cushion cover from the seat cushion frame spring, then pull the cover back, and remove the harness bands (see page 20-79).

3. Release the hook, and unzip the seat-back cover. Pull the side airbag harness out through the hole in the seat cushion cover (see page 20-79).

4. Remove the side airbag (see page 23-134).

5. Detach the clips (A) of the airbag module holder (B) from the seat-back frame.

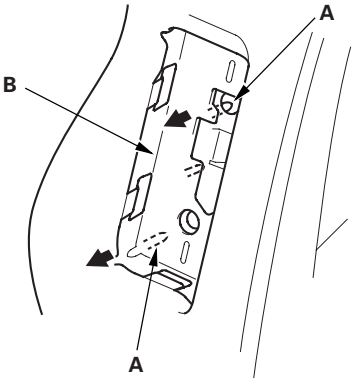

(cont’d)

Front Seat Lumbar Support Replacement (cont'd)

6. Pull away the bottom portion of the seat-back pad (A) from the seat-back frame (B), and remove the nuts securing the lumbar support (C). Remove the bushing (D) and pivot arm from the seat-back frame.

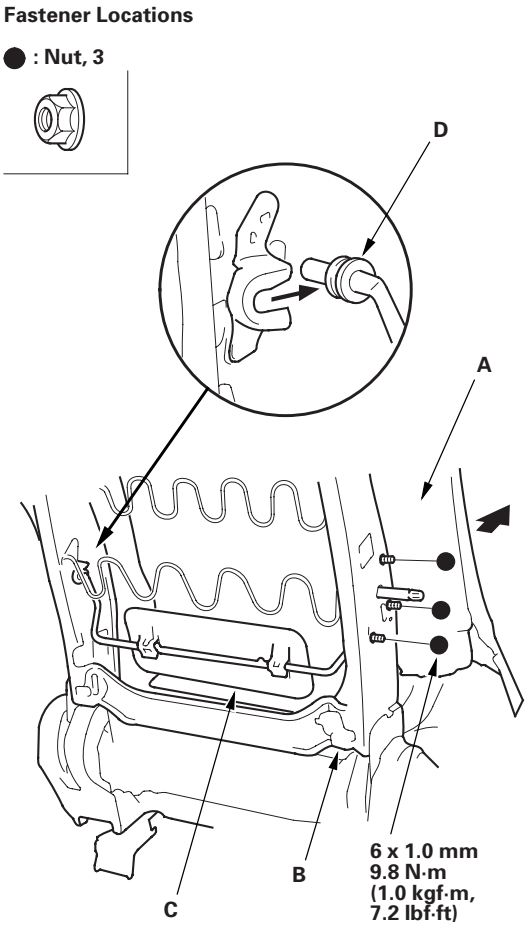

7. Remove the lumbar support (A) as shown.

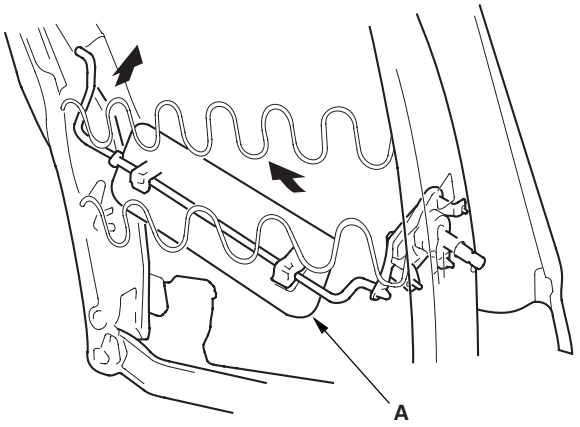

8. Install the lumbar support in the reverse order of removal, and note these items:

   - Replace the bushing if it's damaged.
   - To prevent wrinkles when installing a seat-back cover, make sure the material is stretched evenly over the pad before securing the hook.
   - Make sure the side airbag harness is routed properly.

Rear Seat Removal/Installation

NOTE: Take care not to scratch the body or tear the seat covers.

1. Remove the rear seat as shown.

2. Install the seat in the reverse order of removal, and note these items:

   - Before attaching the seat cushion, make sure there are no twists or kinks in the seat belt buckle straps.
   - When installing the seat cushion, slip the seat belt buckles through the holes in the seat cushion.
   - Make sure the seat-back locks securely.

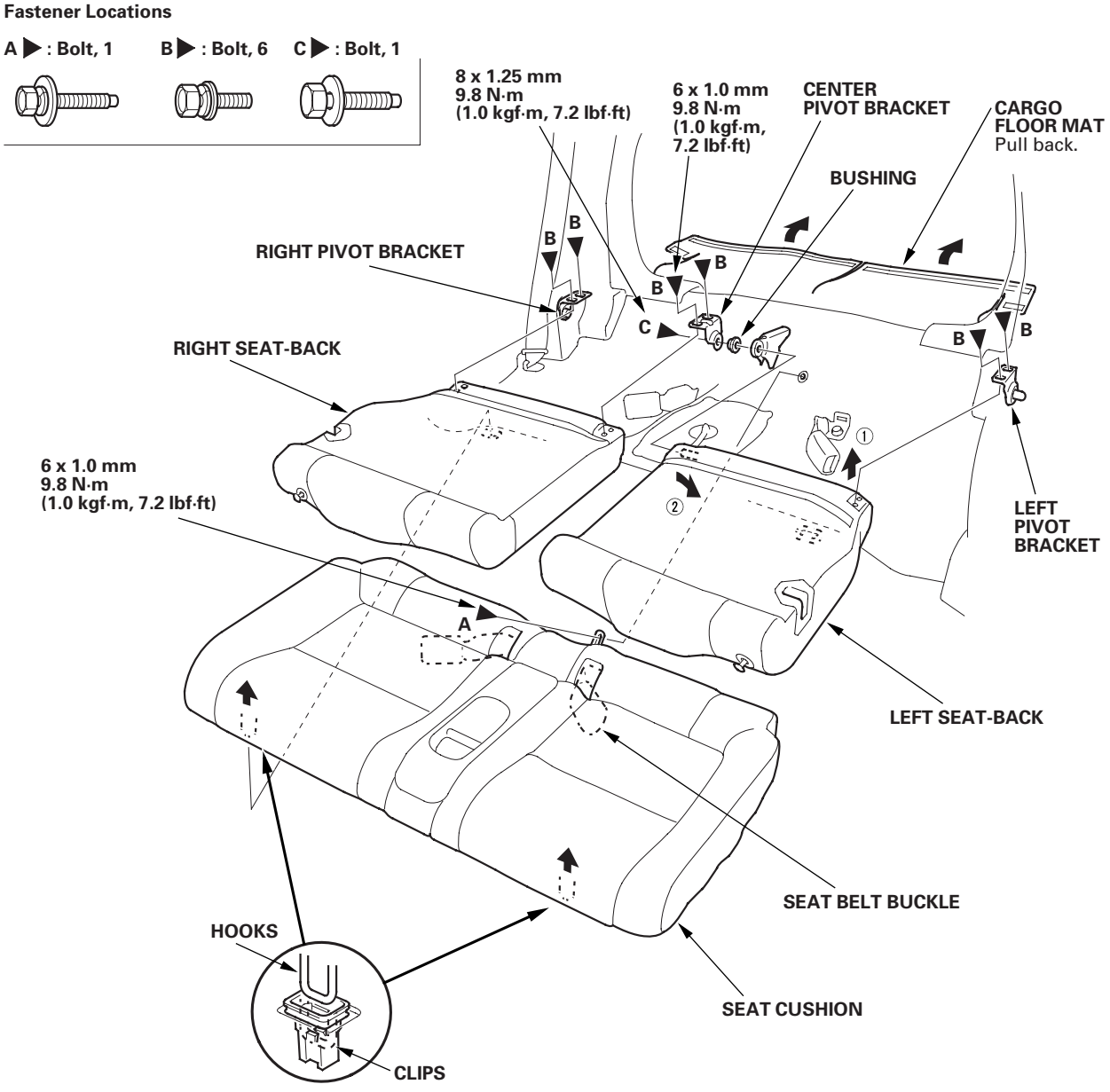

Rear Seat-back Pivot Bracket Replacement

1. Remove the rear seat-back (see page 20-85).

2. Remove the pivot bolt (A), then remove the seat-back pivot bracket (B). If necessary, remove the toothed lock washer (C), then separate the pivot bolt, washer (D), bracket, and bushing (E).

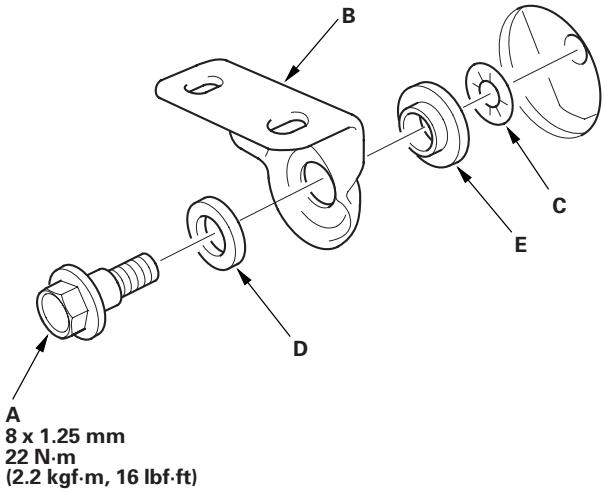

3. Install the pivot bracket in the reverse order of removal, and note these items:

   - Apply multipurpose grease to the pivot portion of the washer and bushing.
   - Apply liquid thread lock to the pivot bolt before reinstallation.

Rear Seat-back Striker Replacement

NOTE: Take care not to scratch the interior trim.

1. Remove the rear side trim panel (see page 20-51).

2. Remove the bolts, then remove the seat-back striker (A).

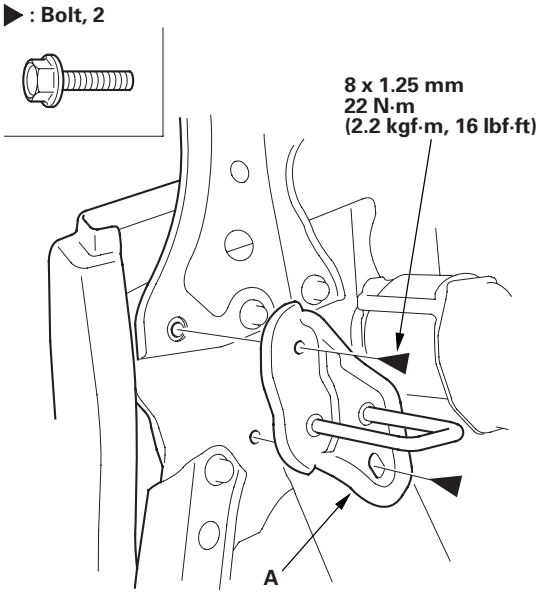

3. Install the striker in the reverse order of removal, and move the striker (A) up or down until it is centered in the seat-back latch (B).

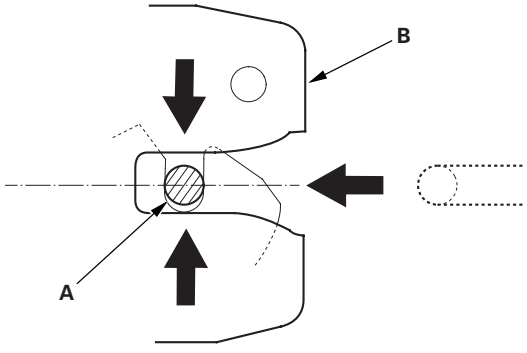

Rear Seat-back Latch Replacement

NOTE:
- Take care not to tear the seams or damage the seat covers.
- Put on gloves to protect your hands.

1. Remove the seat-back (see page 20-85).
2. Remove the latch cover, and pull back the seat-back cover (see page 20-87).
3. Remove the latch knob.
4. Remove the bolts, then remove the seat-back latch (A) from the seat-back frame (B).

Fastener Locations

▶ : Bolt, 2

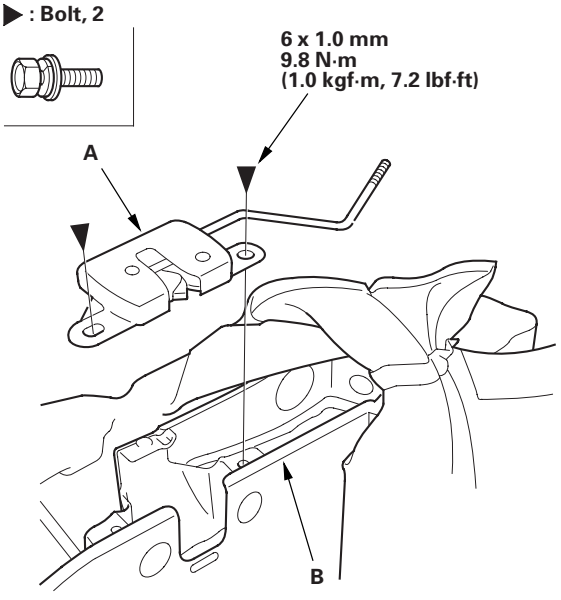

5. Install the latch in the reverse order of removal, and make sure the seat-back locks and unlocks properly.

Rear Seat-back Cover Replacement

NOTE:
- Take care not to tear the seams or damage the seat covers.
- Put on gloves to protect your hands.

1. Remove the seat-back (see page 20-85).
2. Remove the screw (A) and clips (B), then remove the latch cover (C).

Fastener Locations

A ▶ : Screw, 1 B ▷ : Clip, 2

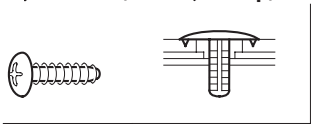

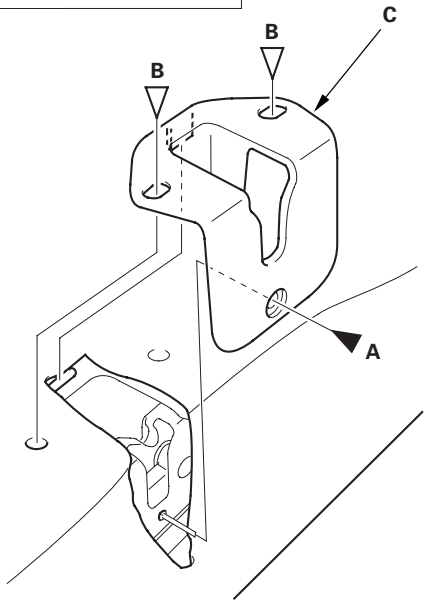

(cont'd)

Rear Seat-back Cover Replacement (cont'd)

3. Release the fasteners (A) and hook (B).

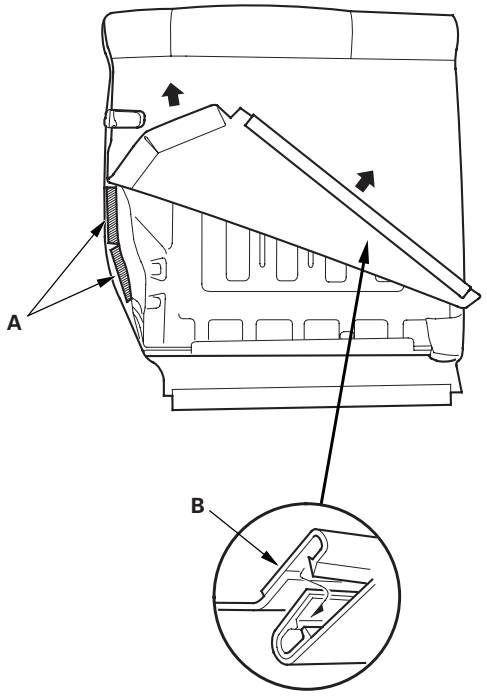

4. Pull back the seat-back cover (A), and remove the clips (B).

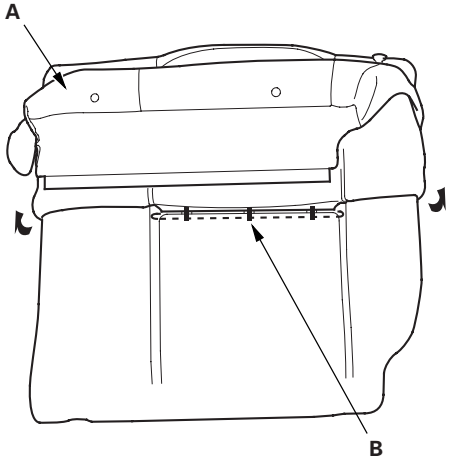

5. Pull back the seat-back cover (A) all the way around. Remove the latch knob (B), and remove the latch collar (C) by pinching the end and pulling it out.

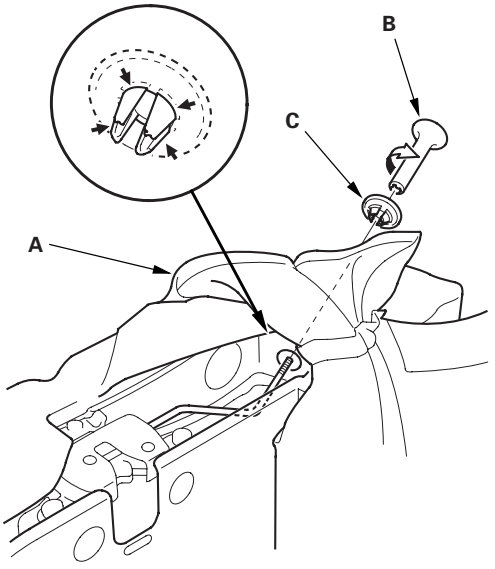

6. Remove the seat-back cover.

7. Install the cover in the reverse order of removal, and note these items:

   - To prevent wrinkles when installing a seat-back cover, make sure the material is stretched evenly over the pad before securing the hook and clips.
   - Replace any clips you removed with new ones. Install them with commercially available upholstery ring pliers.

Rear Seat Cushion Cover Replacement

1. Remove the rear seat-cushion (see page 20-85).

2. Pull up the front edge of the seat cushion center tray (A) to release the clips, and release the hooks (B), then remove the tray. If necessary, remove the clips from the tray.

Fastener Locations

▷ : **Clip, 2**

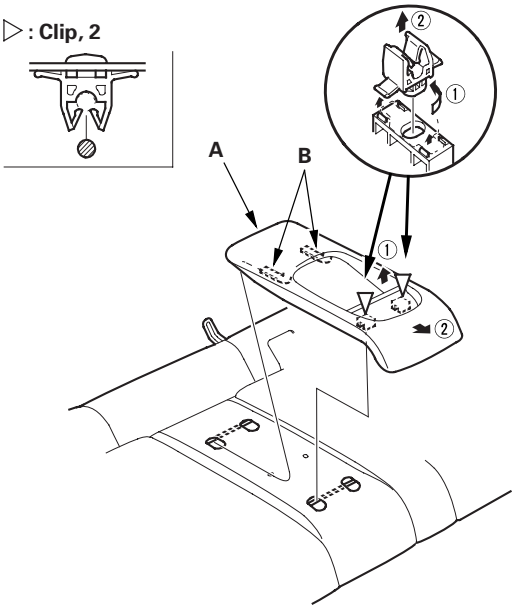

3. Release all the clips (A) from under the seat cushion, and fold back the seat cushion cover (B).

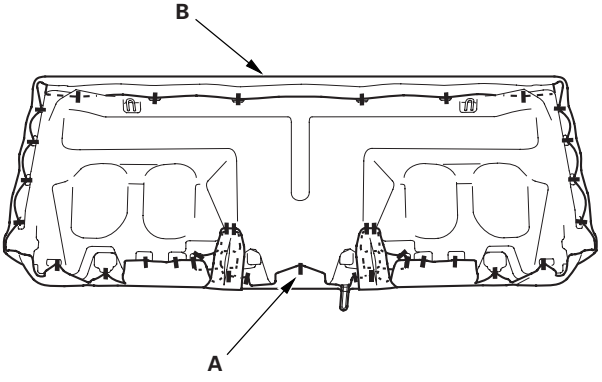

4. Pull back the edge of the seat cushion cover (A) all the way around, and release the clips (B), then remove the seat cushion cover.

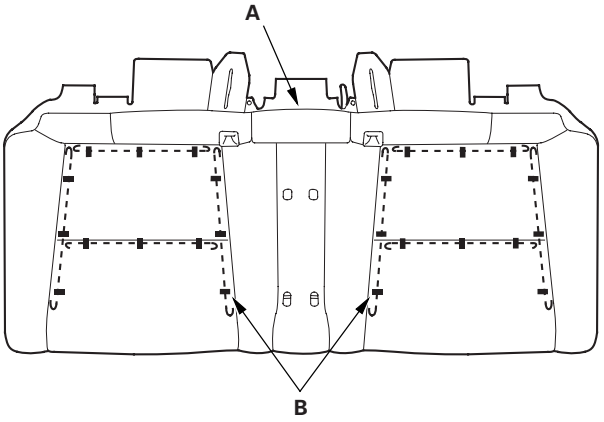

5. Install the cover in the reverse order of removal, and note these items:

   - To prevent wrinkles, make sure the material is stretched evenly over the pad before securing the clips.
   - Replace any clips (A) you removed with new ones. Install them with commercially available upholstery ring pliers (B).

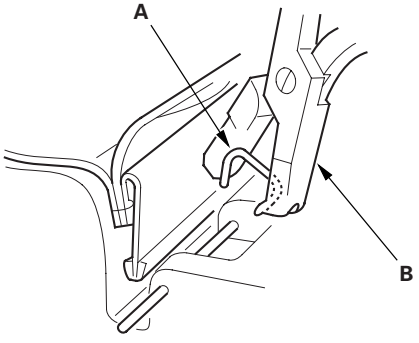

Front Bumper Removal/Installation

’02-04 Models

NOTE:
- Have an assistant help you when removing and installing the front bumper.
- Take care not to scratch the front bumper and body.
- Put on gloves to protect your hands.

1. Remove the front bumper as shown.

2. Install the bumper in the reverse order of removal, and note these items:

   - Make sure the front bumper engages the hooks of the side spacers and upper beams on both sides securely.
   - Replace any damaged or stress-whitenings clips.
   - Push the clips into place securely.

Fastener Locations

A ▶ : Screw, 2 **B ▶ : Screw, 4** **C ▷ : Clip, 10** **D ▷ : Clip, 2**

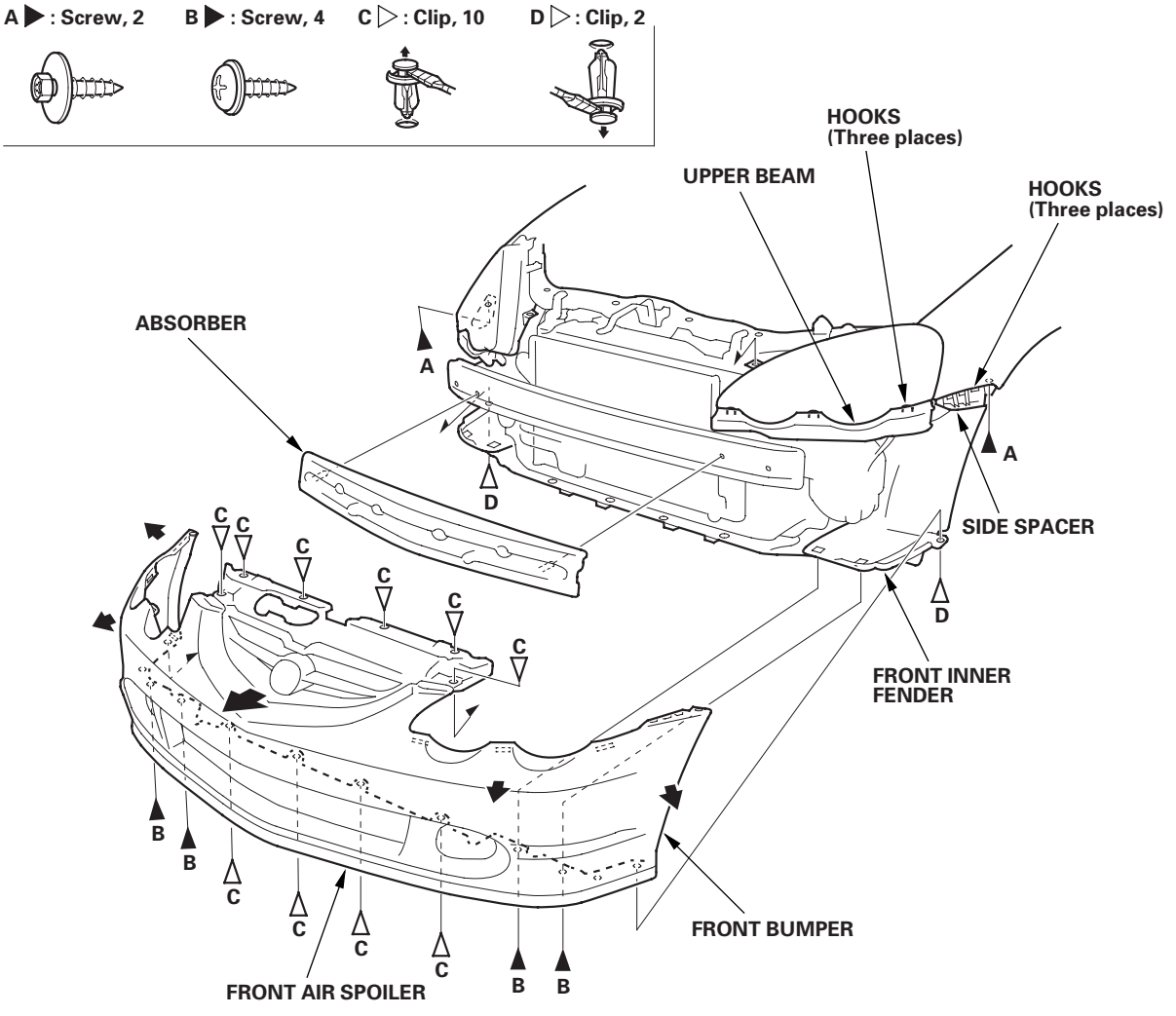

’05-06 Models

NOTE:
- Have an assistant help you when removing and installing the front bumper.
- Take care not to scratch the front bumper and body.
- Put on gloves to protect your hands.

1. Remove the front bumper as shown.

2. Install the bumper in the reverse order of removal, and note these items:

   - Make sure the front bumper engages the hooks of the side spacers and upper beams on both sides securely.
   - Replace any damaged or stress-whitened clips.
   - Push the clips into place securely.

Fastener Locations

A ▶ : Screw, 2 **B ▶ : Screw, 4** **C ▷ : Clip, 10** **D ▷ : Clip, 2**

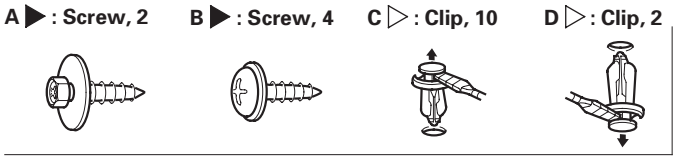

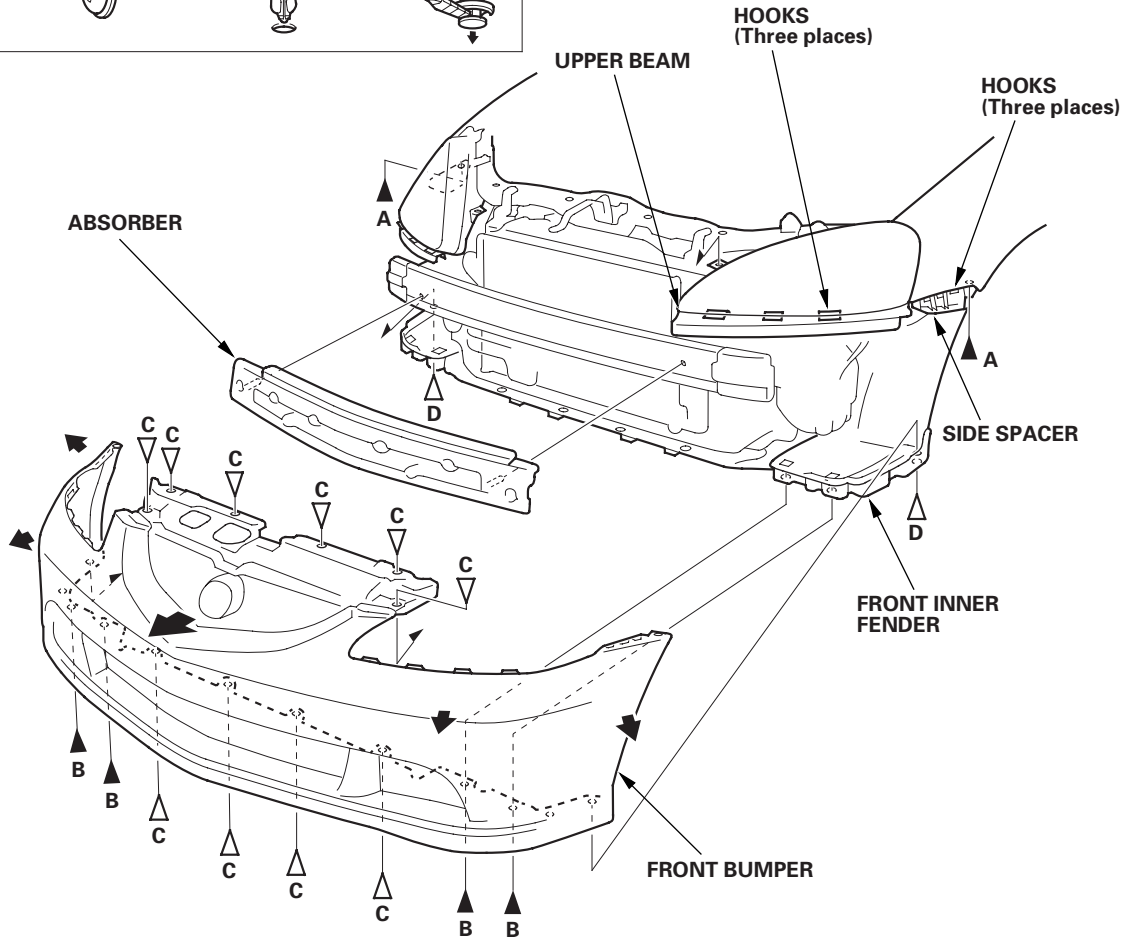

Front Bumper Spoiler Replacement

’02-04 Models

NOTE: Take care not to scratch the front bumper.

1. Remove the front bumper spoiler as shown.
2. Install the spoiler in the reverse order of removal, and note these items:
   - Replace any damaged or stress-whitenings clips.
   - Push the clips and hooks into place securely.

Fastener Locations

A ▶ : Bolt, 2 **B ▷ : Clip, 2** **C ▷ : Clip, 2**

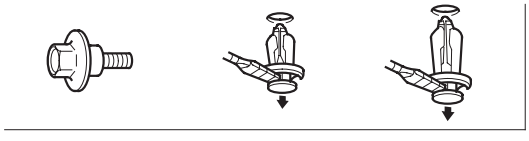

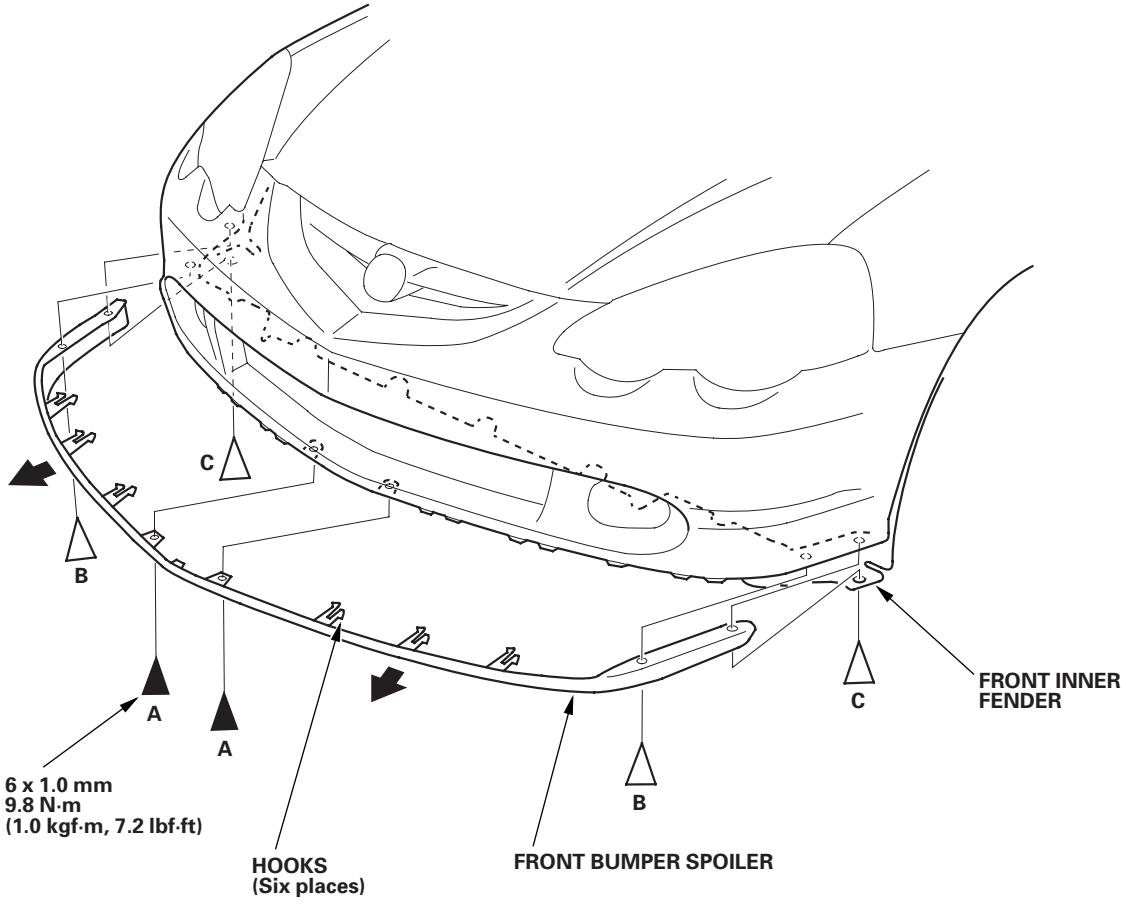

Front Bumper Lower Grille Replacement

Special Tools Required
KTC trim tool set SOJATP2014

’05-06 Models

NOTE:
- Put on gloves to protect your hands.
- Use the appropriate tool from the KTC trim tool set to avoid damage when prying components.
- Take care not to scratch the front bumper.

1. Remove the front bumper (see page 20-91).

2. Remove the license plate.

3. Remove the bolts (A, B), then remove the license plate base (C) from the front bumper (D).

Fastener Locations
A ▶ : Bolt, 1 B ▶ : Bolt, 2

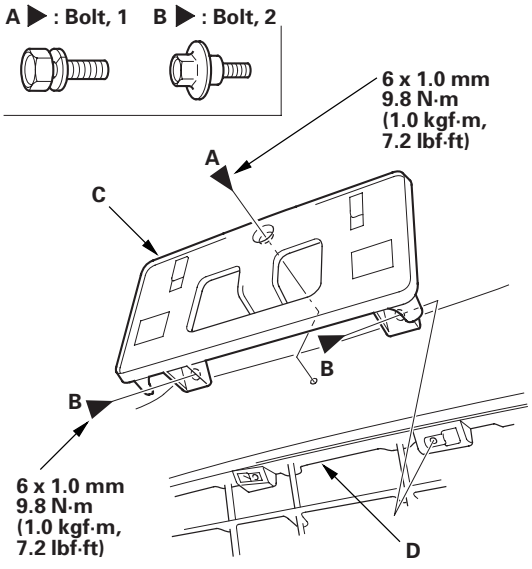

4. From the back of the front bumper (A), remove the screws (B), and release the speed nuts (C) securing the front bumper lower grille (D) by using pliers (E) as shown.

Fastener Locations
B ▶ : Screw, 4 C ▷ : Speed nut, 3

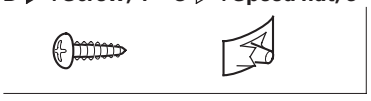

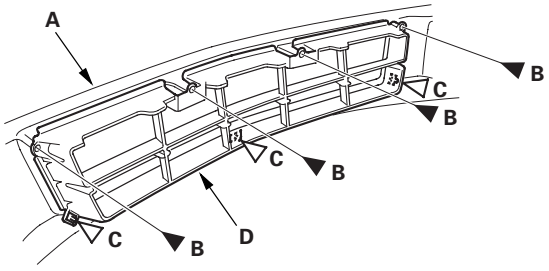

Speed nut removal

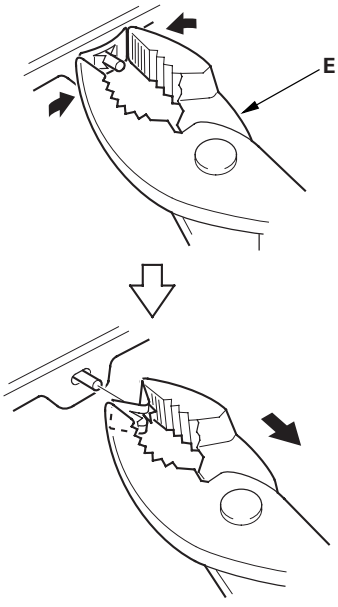

(cont’d)

Front Bumper Lower Grille Replacement (cont'd)

5. Detach the hooks (A) on the bottom of the front bumper lower grille (B), and pull out the grille to release it from the pins (C) of the front bumper (D), then remove the grille.

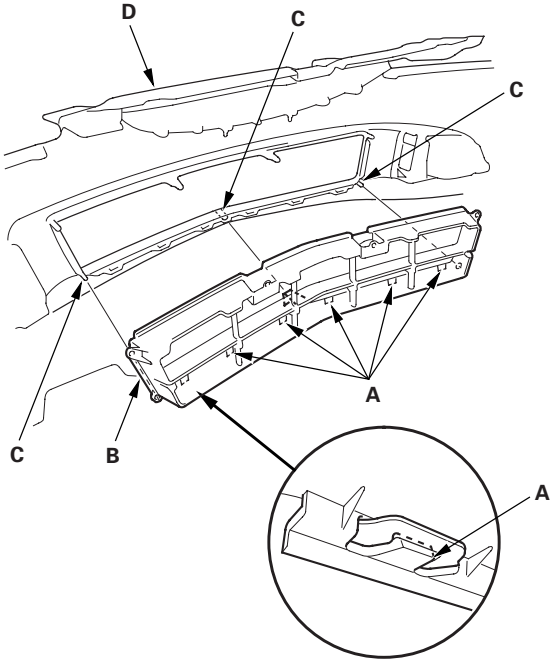

6. Install the grille in the reverse order of removal, and note these items:

   - Push the hooks into place securely.
   - Release the speed nuts with new ones.

Front Bumper Side Cover Replacement

Special Tools Required
KTC trim tool set SOJATP2014

'05-06 Models

NOTE:
- Put on gloves to protect your hands.
- Use the appropriate tool from the KTC trim tool set to avoid damage when prying components.
- Take care not to scratch the front bumper.

1. Remove the front bumper (see page 20-91).

2. From the back of the front bumper (A), release the hooks (B), and pull out the front bumper side cover (C) to release the hook (D), then remove the cover.

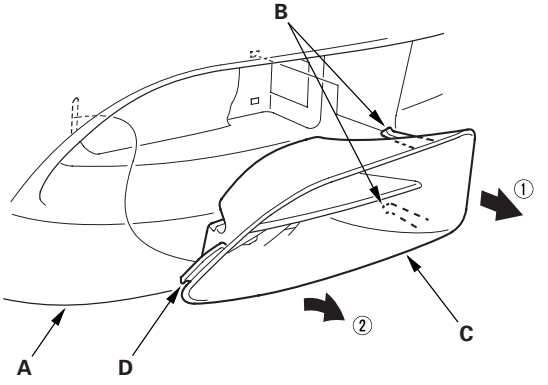

3. Install the cover in the reverse order of removal, and push the hooks into place securely.

Rear Bumper Removal/Installation

’02-04 Models

NOTE:
- Have an assistant help you when removing and installing the rear bumper.
- Take care not to scratch the rear bumper and body.
- Put on gloves to protect your hands.

1. Remove the rear bumper as shown.

2. Install the bumper in the reverse order of removal, and note these items:

   - Make sure the rear license light connector is plugged in properly.
   - Make sure the rear bumper engages the hooks of the side spacers and upper beams on both sides securely.
   - Replace any damaged or stress-whitened clips.
   - Push the clips into place securely.

Fastener Locations

A ▶ : Screw, 2 **B ▶ : Screw, 4** **C ▷ : Clip, 2**

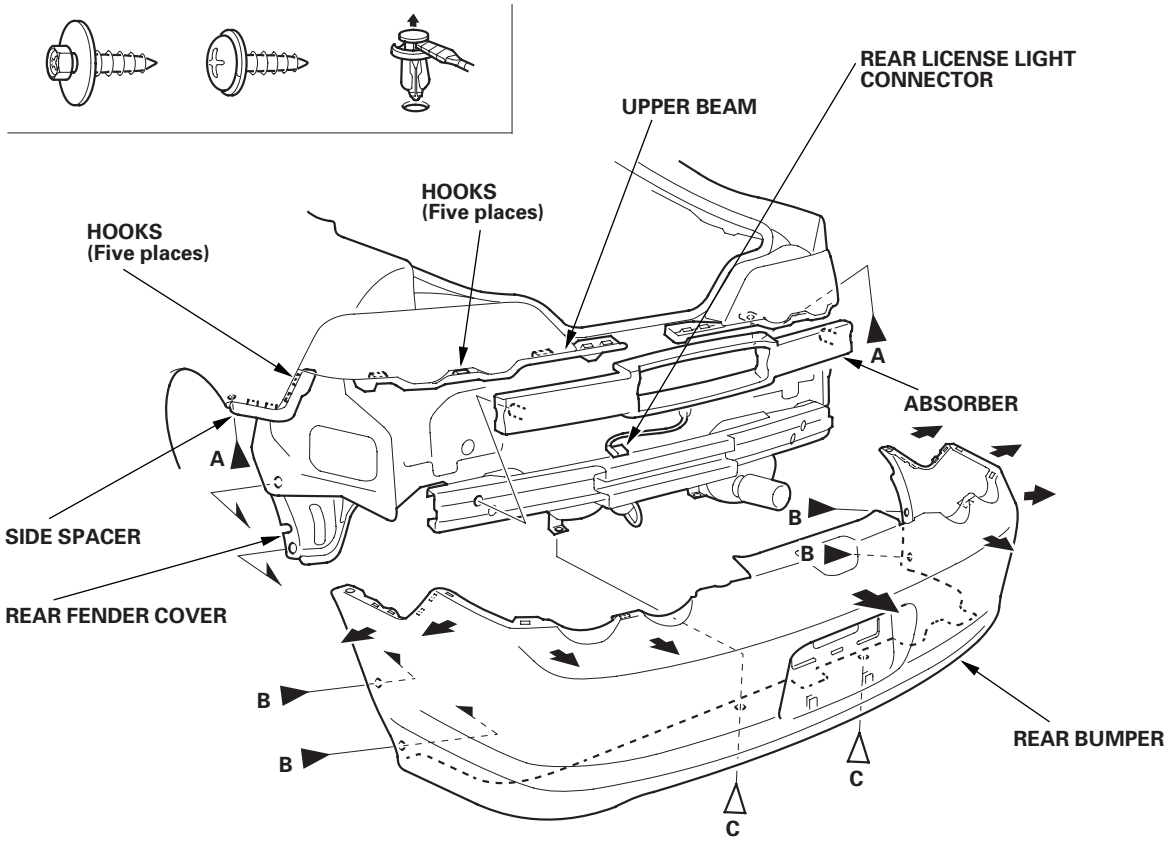

Rear Bumper Removal/Installation (cont'd)

'05-06 Models

NOTE:
- Have an assistant help you when removing and installing the rear bumper.
- Take care not to scratch the rear bumper and body.
- Put on gloves to protect your hands.

1. Remove the rear bumper as shown.

2. Install the bumper in the reverse order of removal, and note these items:

   - Make sure the rear license light connector is plugged in properly.
   - Make sure the rear bumper engages the hooks of the side spacers and upper beams on both sides securely.
   - Replace any damaged or stress-whitenings clips.
   - Push the clips into place securely.

Fastener Locations

A ▶ : Screw, 2 **B ▶ : Screw, 4** **C ▷ : Clip, 2**

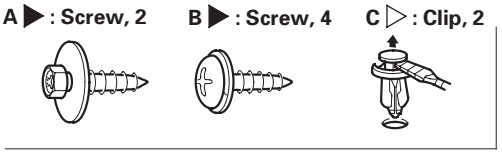

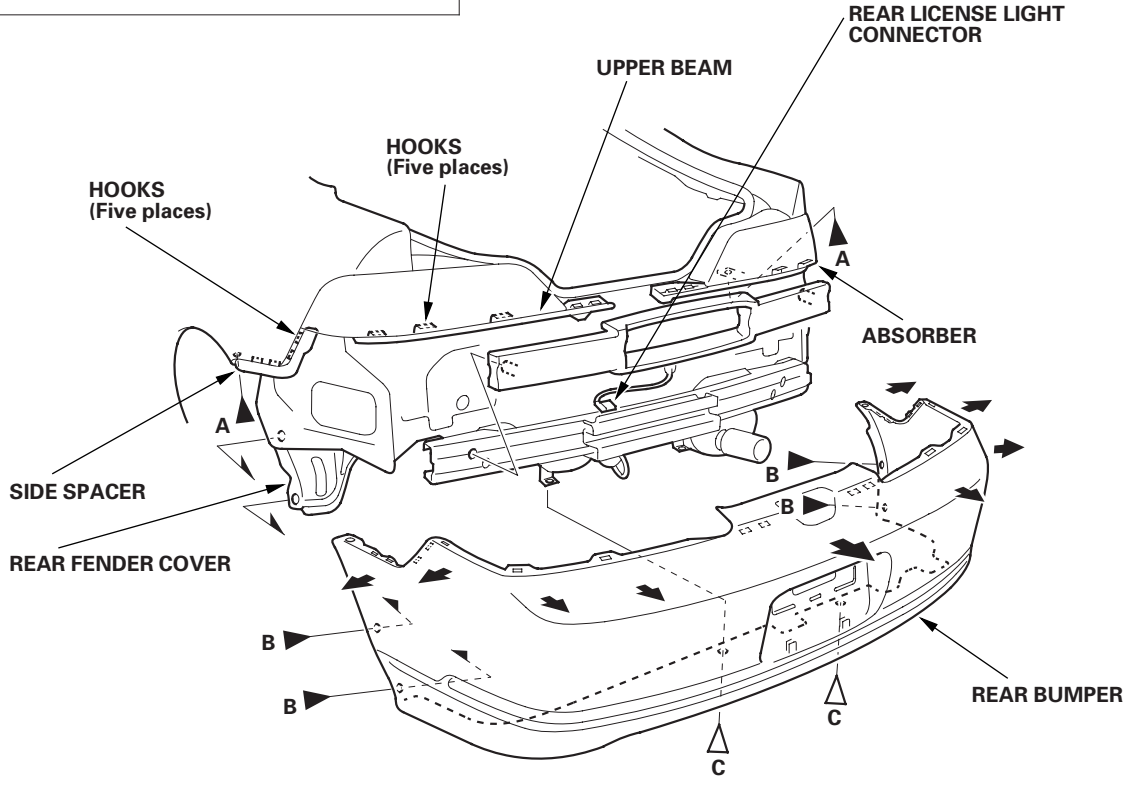

Adjustment

1. Slightly loosen each hood hinge bolt.

2. Adjust the hood (A) alignment in this sequence:

   - Adjust the hood right and left, as well as forward and rearward, by using the elongated holes on the hood hinge (B).
   - Turn the hood edge cushions (C), as necessary, to make the hood fits flush with the body at the front and side edges.

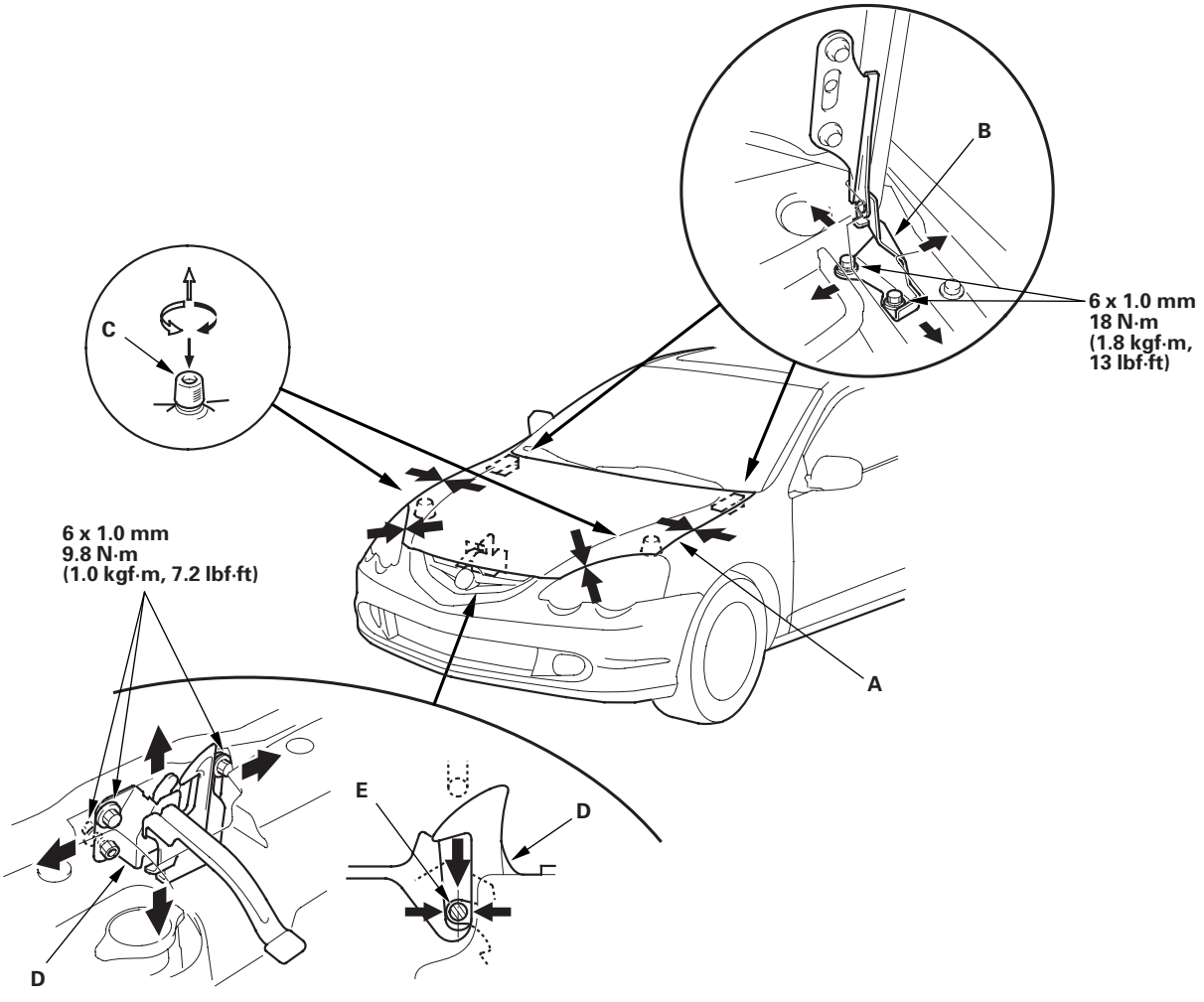

3. Adjust the hood latch (D) to obtain the proper height at the forward edge, and move the hood latch right or left until the striker (E) is centered in the hood latch.

4. Tighten each bolt securely.

(cont'd)

Adjustment (cont'd)

5. Check that the hood opens properly and locks securely.

6. Apply touch-up paint to the hinge mounting bolts and around the hinges.

7. Apply multipurpose grease to each location of the hood latch and hood hinge as indicated by the arrows.

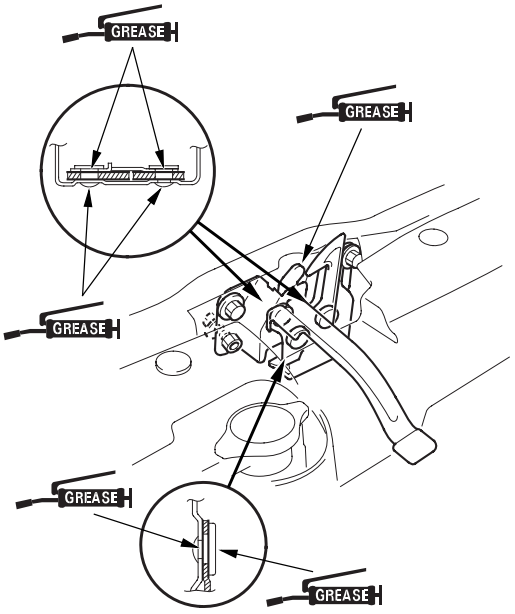

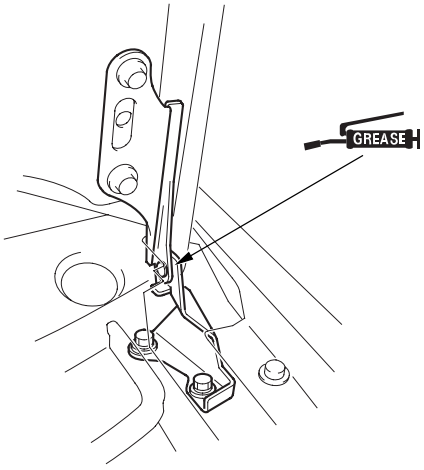

Hood Seal Replacement

1. Using a clip remover, detach the clips (A, B), then remove the hood seals (C) and center hood seal (D). Take care not to scratch the hood.

Fastener Locations

A ▷ : Clip, 12 **B ▷ : Clip, 6**

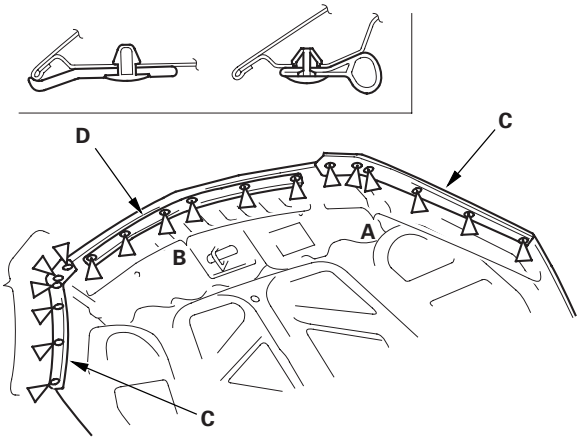

2. Install the seals in the reverse order of removal, and note these items:

   - Replace any damaged or stress-whitened clips.
   - Push the clips into place securely.

Hood Insulator Replacement

For Some Models

1. Disconnect the windshield washer tubes (A), and release the tube from the clip (B) and the hooks (C).

Fastener Location

B ▷ : Clip, 1

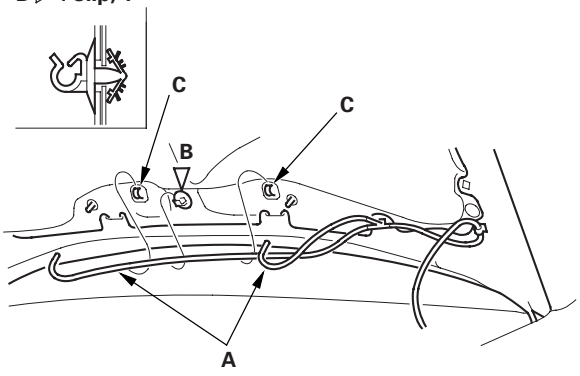

2. Using a clip remover, detach the clips (A, B). Release the hooks (C), then remove the hood insulator (D). Take care not to scratch the hood.

Fastener Locations

A ▷ :Clip, 9 B ▷ :Clip, 1

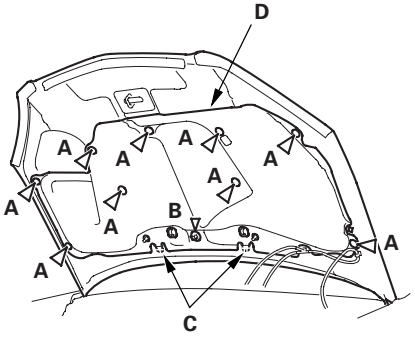

3. Install the insulator in the reverse order of removal, and note these items:

- Replace any damaged or stress-whitened clips.
- Push the clips into place securely.
- Make sure the windshield washer tubes are connected properly.

Adjustment

1. Remove the support strut from each side (see page 20-101).

2. Remove the headliner (see page 20-55).

3. Slightly loosen each screw and nut.

4. Adjust the hatch (A) alignment in the following sequence:

   - Adjust the hatch hinges (B) right and left, as well as forward and rearward, using the elongated holes.
   - Turn the hatch edge cushions (C) in or out, as necessary, to make the hatch fit flush with the body at the side edges.
   - Adjust the fit between the hatch and hatch opening by moving the striker (D).

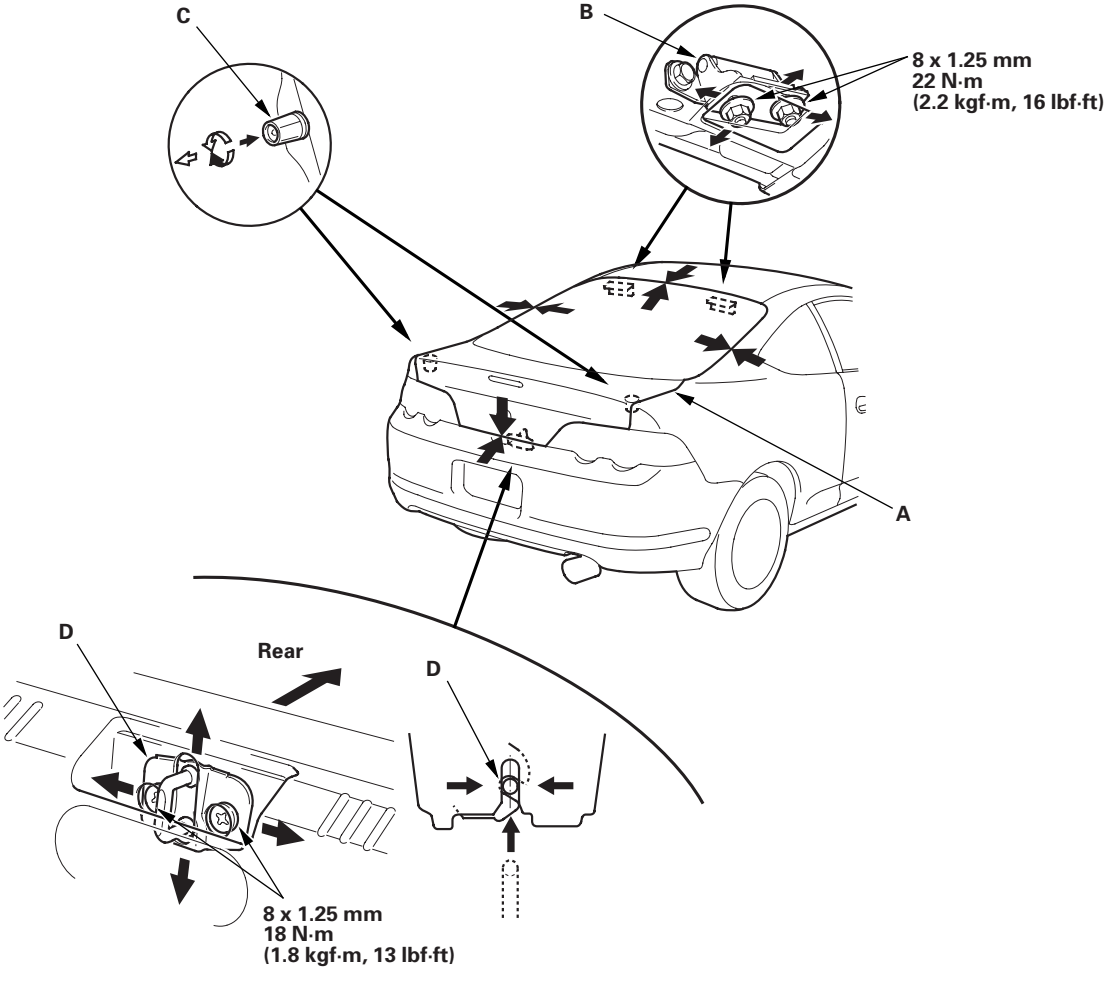

5. Tighten each screw and nut securely.

6. Check that the hatch opens properly and locks securely.

7. Reinstall the support struts securely.

8. Reinstall all remaining removed parts.

9. Apply multipurpose grease to the pivot portion of the hatch hinges as indicated by the arrows.

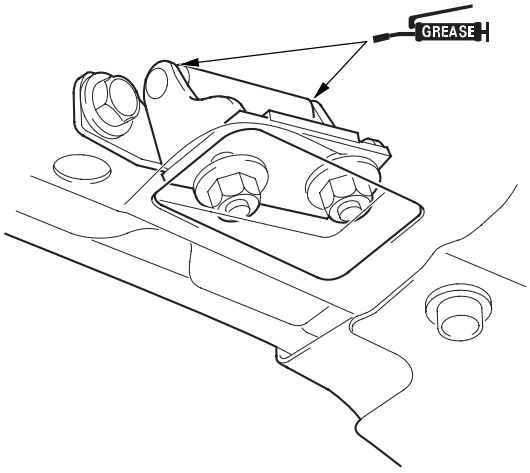

Hatch Support Strut Replacement

NOTE:
- Have an assistant help you when removing and installing the support strut.
- Take care not to scratch the body and hatch.

1. Remove the pivot bolt (A) from the body.

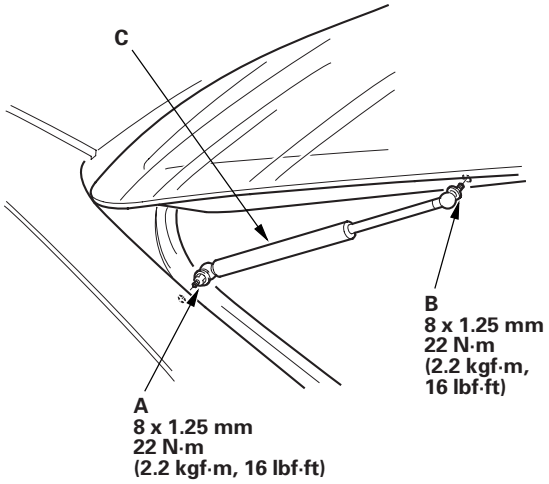

2. Remove the pivot bolt (B) from the hatch, then remove the support strut (C).

3. Install the support strut in the reverse order of removal.

Hatch Weatherstrip Replacement

1. Remove the hatch weatherstrip (A) by pulling out on it.

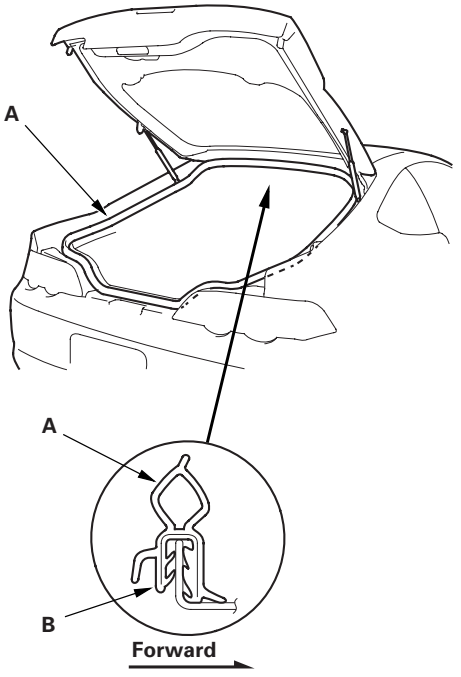

2. Locate the painted alignment mark (B) on the hatch weatherstrip. Align the painted mark with the alignment tab in the center of the hatch opening, and install the hatch weatherstrip all the way around in the direction shown. Make sure there are no wrinkles in the weatherstrip.

3. Check for water leaks.

Adjustment

1. Slightly loosen the hinge mounting bolts (A).

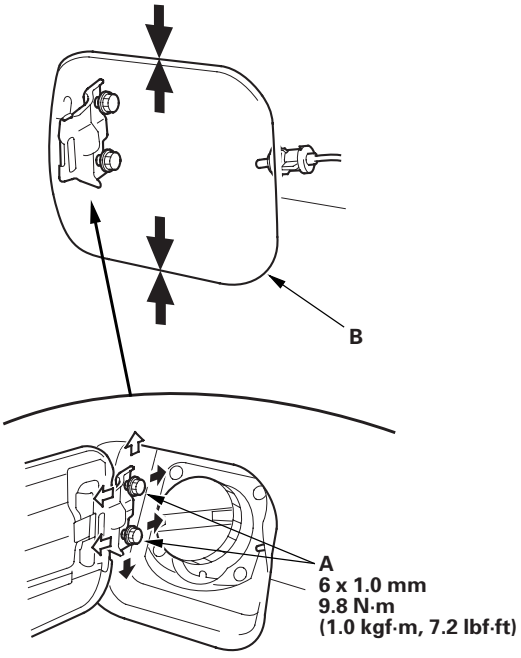

2. Adjust the fuel fill door (B) in or out until it's flush with the body, and up or down as necessary to equalize the gaps.

3. Tighten the hinge mounting bolts.

4. Check that the fuel fill door opens properly and locks securely, and check that the rear of the door is flush with the body.

5. Apply multipurpose grease to each location indicated by the arrows.

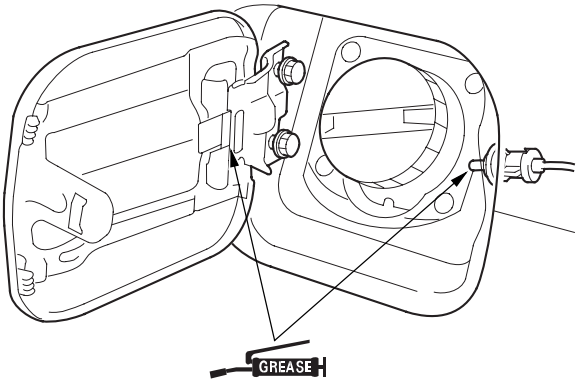

6. Apply touch-up paint to the hinge mounting bolts and around the hinges.

Front Grille Cover Replacement

’02-04 Models

1. Remove the front bumper (see page 20-90).

2. Remove the front grille cover (A) and front emblem base (B). Take care not to scratch the front bumper (C).

   –1 Remove the screws and push nuts (D).
   –2 Remove the front emblem base from the front bumper.
   –3 Pull the front grille cover away to release the pins (E) of the front bumper.

Fastener Locations

▶ : Screw, 4

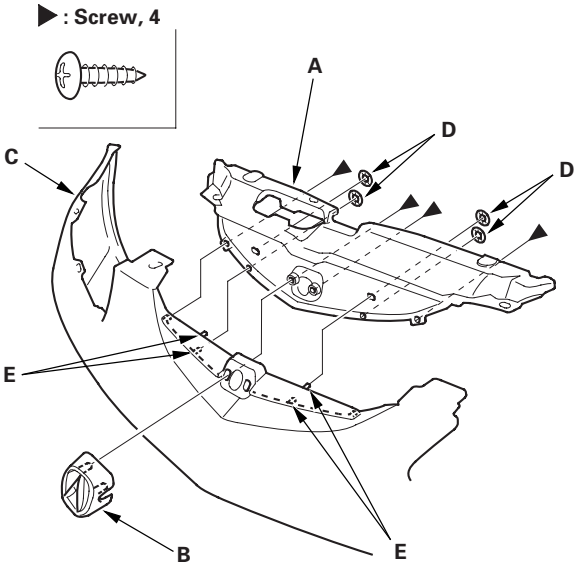

3. Install the grille cover and emblem base in the reverse order of removal, and note these items:

   • Replace the push nuts with new ones.
   • Push the push nuts into place securely.

4. Reinstall the front bumper.

’05-06 Models

1. Remove the front bumper (see page 20-91).

2. Remove the clips. Release the hooks (A) of the front grille cover (B), and pull the cover away to release the it’s groove (C) from the front bumper (D), then remove the cover.

Fastener Locations

▷ : Clip, 2

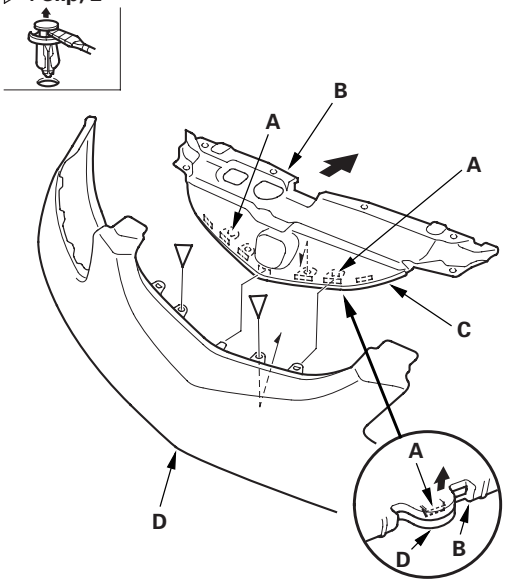

3. Install the grille cover in the reverse order of removal, and note these items:

   • Push the hooks into place securely.
   • Replace any damaged or stress-whitenings clips.

4. Reinstall the front bumper.

Cowl Cover Replacement

1. Remove the windshield wiper arms (see page 22-158).

2. Using a clip remover, detach the clips (A), then remove the hood rear seal (B), and detach the clips (C) from the cowl covers. Take care not to scratch the cowl covers.

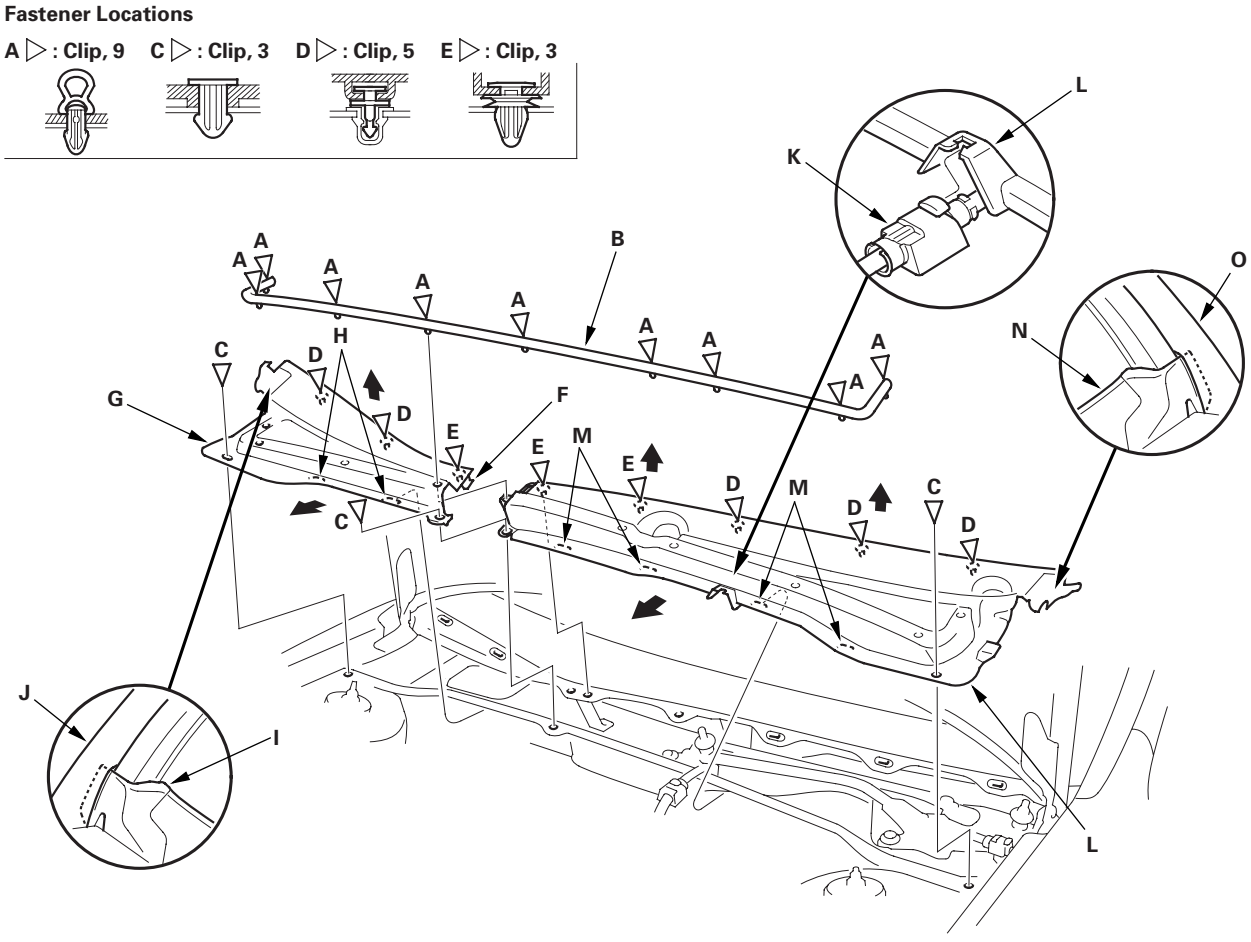

3. Detach the clips (D, E) and release the hook (F) by carefully pulling the passenger's cowl cover (G) upward. Pull the cover forward to release the hooks (H), and pull the hinge cover (I) out from the front fender (J), then remove the cover. Take care not to scratch the body.

4. Remove the windshield wiper subharness grommet (K) from the driver's cowl cover (L).

5. Detach the clips (D, E) by carefully pulling the driver's cowl cover upward, and pull the cover forward to release the hooks (M). Pull the hinge cover (N) out from the front fender (O), then remove the cover. Take care not to scratch the body.

6. Install the cover in the reverse order of removal, and note these items:

   - Replace any damaged or stress-whitenings clips.
   - Push the clips into place securely.

Roof Molding Replacement

Special Tools Required
KTC trim tool set SOJATP2014

NOTE: Use the appropriate tool from the KTC trim tool set to avoid damage when prying components.

1. Apply protective tape (A) to the body. Using a trim tool, pry up on the roof molding (B). Take care not to scratch the body.

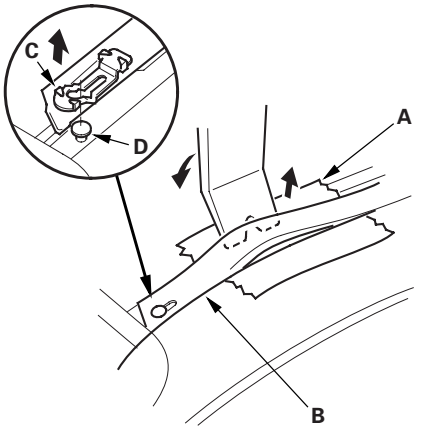

2. Pull up and slide the roof molding to release the front bracket (C) from the pin (D).

3. Pull up the front portion of roof molding.

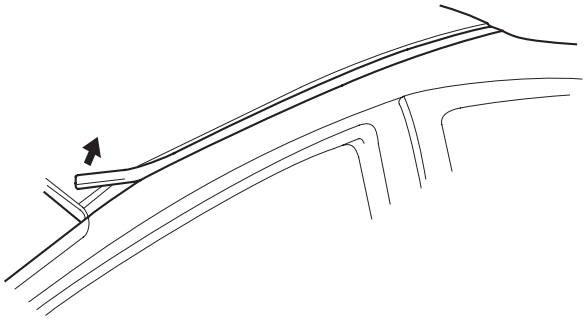

4. Pull up and release the rear bracket (A) from the pin (B), then remove the roof molding (C).

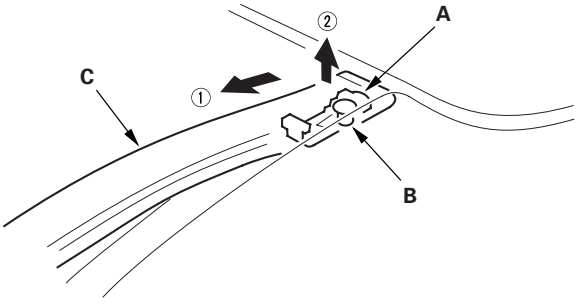

5. Install the molding in the reverse order of removal, and note these items:

   - Take care not to damage the windshield molding.
   - Make sure the roof molding is installed securely.

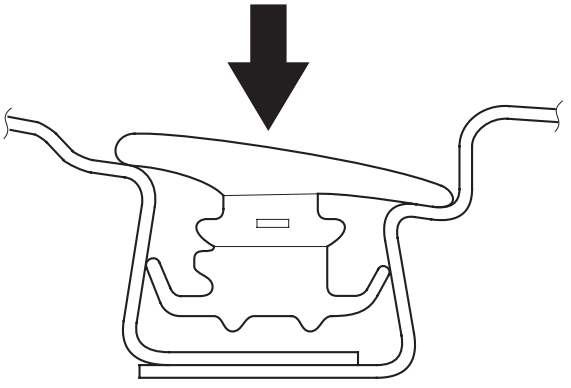

Side Sill Panel Replacement

1. Remove the side sill panel.

   –1 Remove the screws, and remove the splash guard (A) if equipped.
   –2 Pull the inner fender (B) back as necessary, and remove the expansion clips (C).
   –3 Slide the side sill panel (D) forward, and remove it. The side clips (E) will stay in the body.
   –4 Remove the side clips from the body.

Fastener Locations

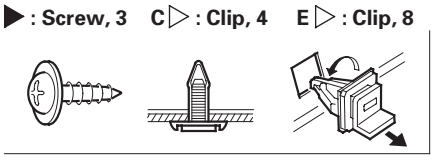

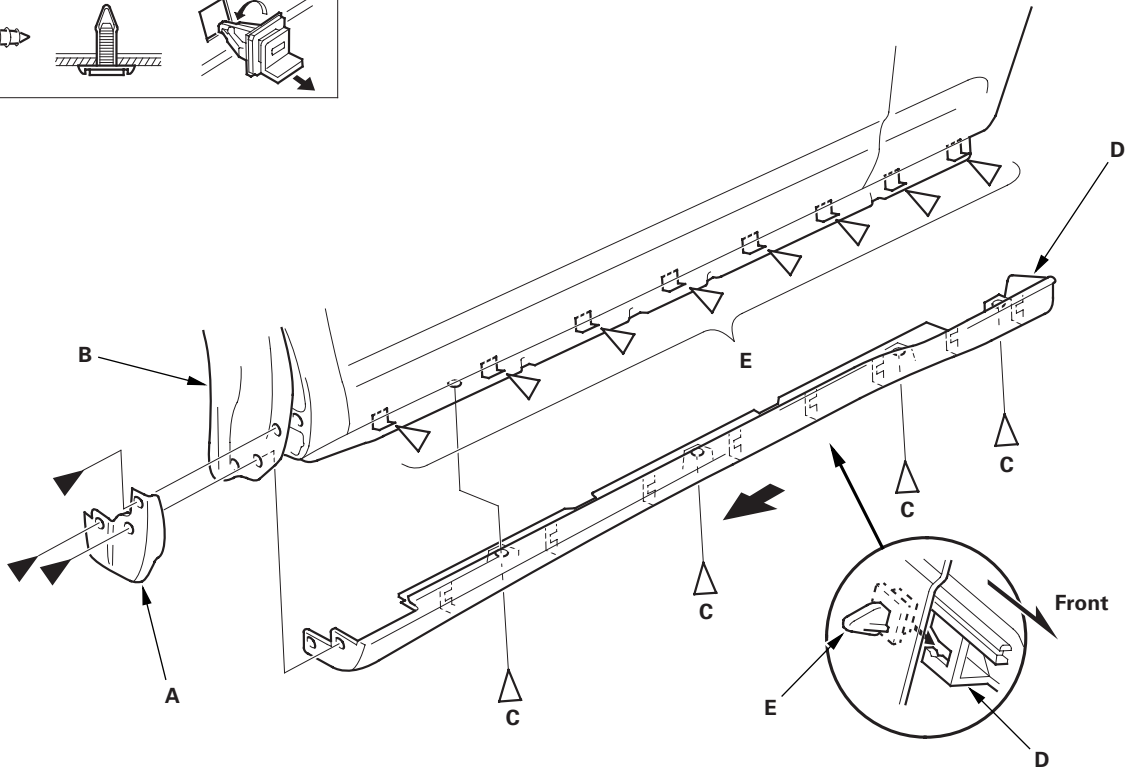

2. Replace any damaged or stress-whitened clips.

3. Install the side clips on the side sill panel.

4. Hold the panel up, and fit all the side clips into the holes in the body, then push on the panel until the clips snap into place.

5. Install all the expansion clips.

6. Reinstall the screws and splash guard (if equipped).

Hatch Spoiler Replacement

For Some '05-06 Models

NOTE: Put on gloves to protect your hands.

1. Remove the hatch trim panel (see page 20-54).
2. From inside the hatch, remove the plug caps (A) from both sides, then remove the nuts.

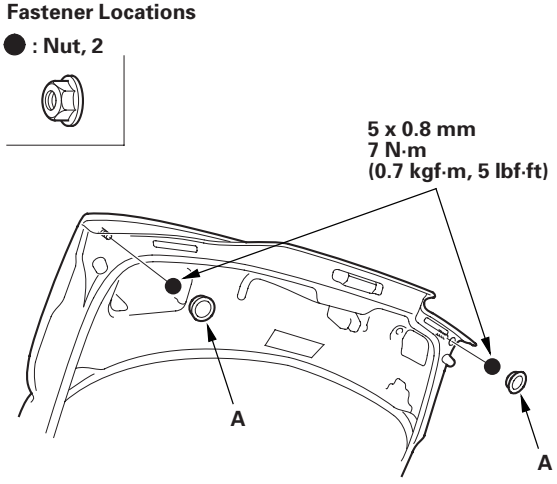

3. From inside the hatch, release the clips (A, B) while pulling up on the hatch spoiler (C). Take care not to scratch the hatch while removing the spoiler.

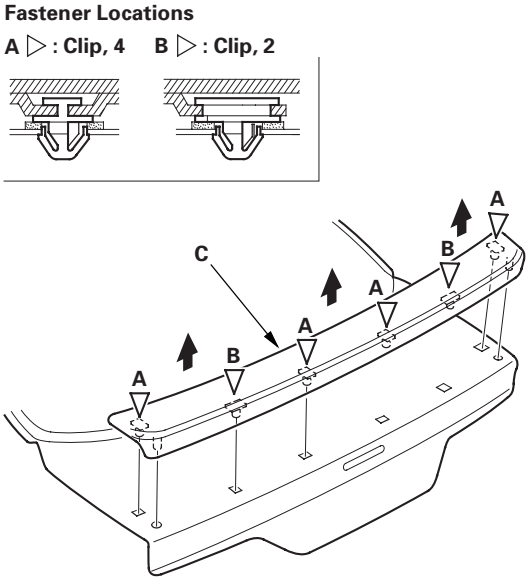

4. Install the spoiler in the reverse order of removal, and note these items:
   - Replace any damaged or stress-whitened clips.
   - Push the clips into place securely.

Emblem Replacement

NOTE: When removing the emblems, take care not to scratch the body.

1. ’02-04 models: To remove the front ‘‘A’’ emblem, remove the front emblem base (see page 20-104).
   ’05-06 models: To remove the front ‘‘A’’ emblem, remove the front bumper (see page 20-91).

2. Use a piece of string to cut through the adhesive tape on the emblems.

3. Clean the body surface with a sponge dampened in alcohol. After cleaning, keep oil, grease and water from getting on the surface.

4. Apply the emblems where shown. When installing the LEV emblem on the quarter glass, align the application tape with the edge of the quarter glass, then press the emblem into place, and remove the application tape.

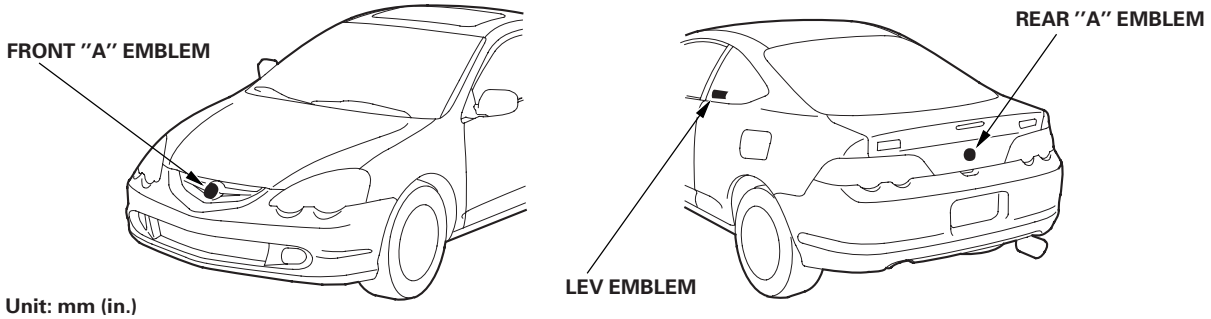

Unit: mm (in.)
Adhesive tape: Thickness 0.8 mm (0.03 in.)

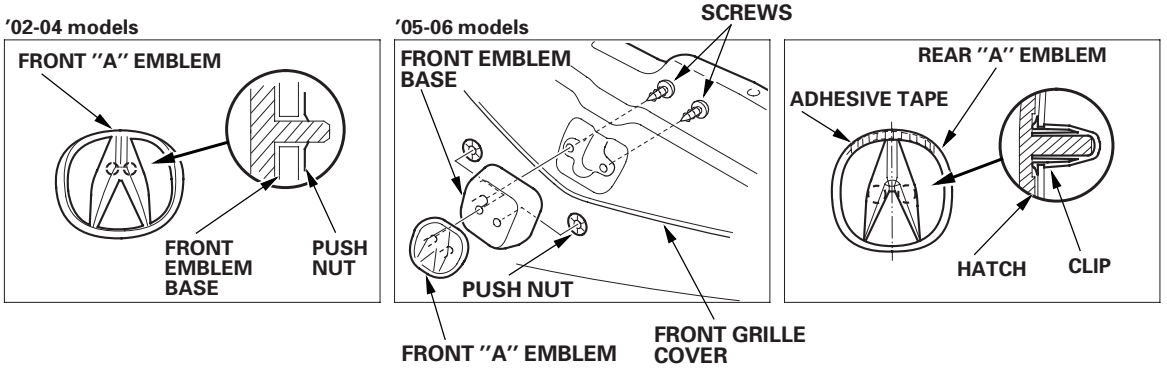

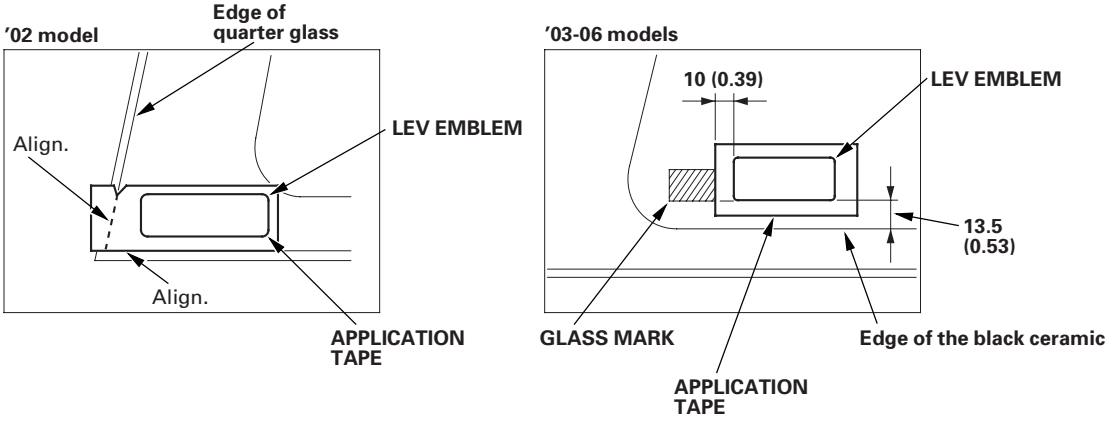

(cont’d)

Emblem Replacement (cont'd)

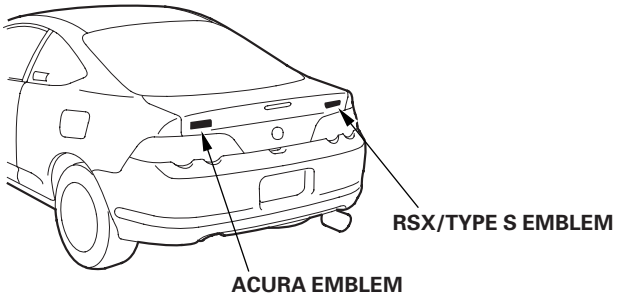

Unit: mm (in.)
Adhesive tape: Thickness 0.8 mm (0.03 in.)

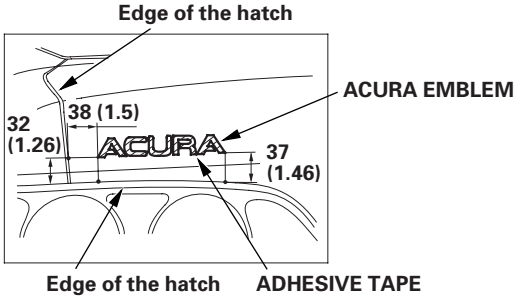

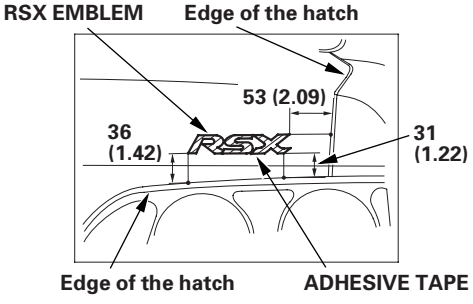

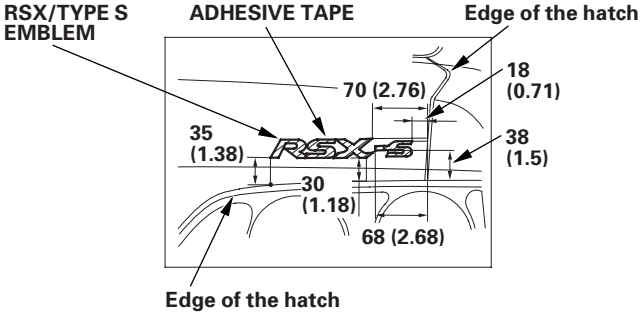

5. After installing the front ''A'' emblem, reinstall the front emblem base, '02-04 models (see page 20-104), and then reinstall the front bumper, '02-04 models (see page 20-90), '05-06 models (see page 20-91).

Front Inner Fender Replacement

NOTE: Take care not to scratch the body.

1. Remove the front inner fender (A).

   –1 On the back of the wheel arch, remove the screws (B). If equipped, remove the front splash guard (C).
   –2 From under the front bumper (D), remove the screws (B) securing the front bumper, splash shield (E), and front inner fender, and remove the clip (F) securing the front bumper, front air spoiler (G) ('02-04 models), and front inner fender.
   –3 From the wheel arch, remove the clips (H, I) securing the front inner fender (and splash shield) on the body.
   –4 Release the hook (J) of the splash shield, then remove the front inner fender.

Fastener Locations

B ▶ : Screw, 7 F ▷ : Clip, 1 H ▷ : Clip, 6 I ▷ : Clip, 1

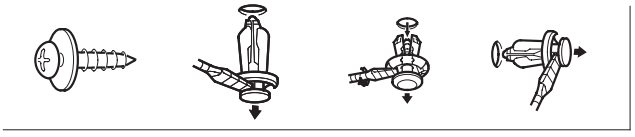

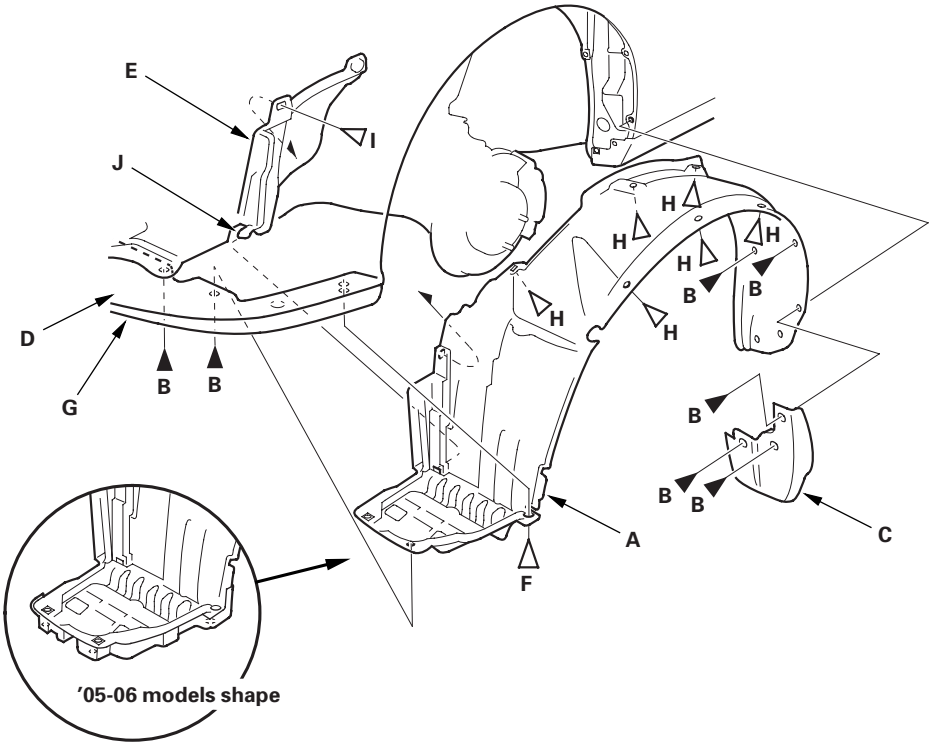

2. Install the inner fender in the reverse order of removal, and note these items:

   - Replace any damaged or stress-whitened clips.
   - Push the clips into place securely.

Front Fender Fairing Replacement

1. Remove the front inner fender as necessary (see page 20-111).

2. Open the front door. From inside the door, remove the upper and lower clips (A) securing the front fender fairing (B) to the front fender (C).

Fastener Locations

A▷ : Clip, 2

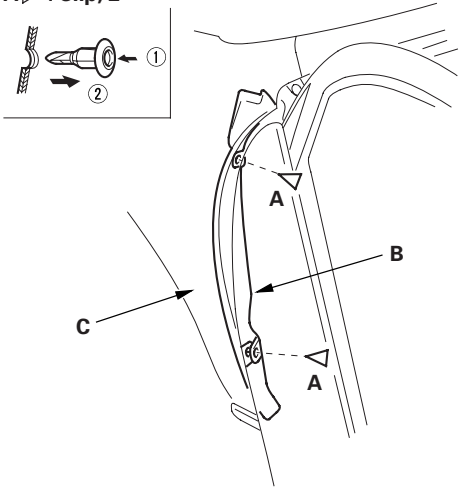

3. From the wheel arch, remove the clip (A), and release the clip (B), then remove the front fender fairing (C).

Fastener Locations

A▷ : Clip, 1 **B▷ : Clip, 1**

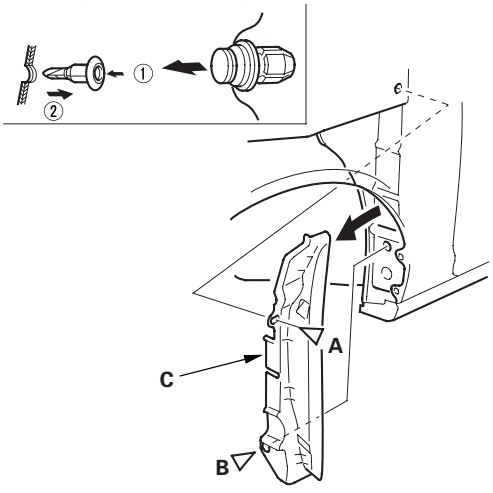

4. Install the fender fairing in the reverse order of removal, and note these items:

- Replace any damaged or stress-whitened clips.
- On the left side of the vehicle, route the rear window washer tube (A) through the slit (B) in the front fender fairing (C).
- Before installing the clips in the doorjamb area, install the front fender fairing (C) on the front fender (D) properly as shown.
- Push the clips into place securely.

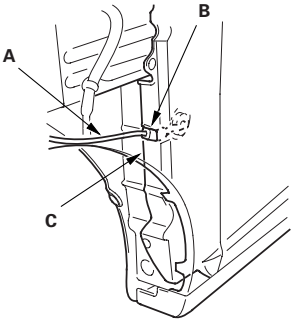

Upper portion

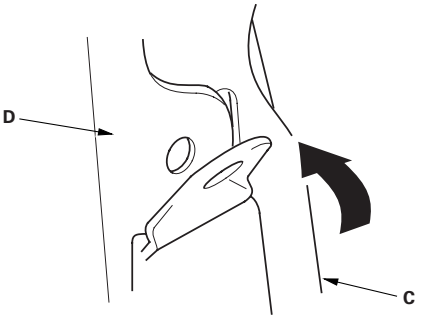

Lower portion

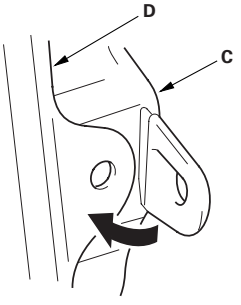

Rear Strake Replacement

For Some Models

1. Remove the bolts (A) and clips (B), then remove the rear strake (C) on each side. Take care not to scratch the body.

Fastener Locations

A ▶ : Bolt, 5 B ▷ : Clip, 2

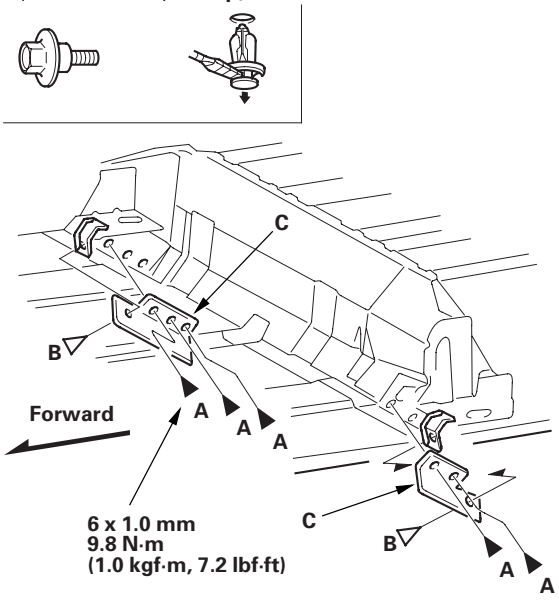

2. Install the strake in the reverse order of removal, and note these items:

   - Replace any damaged or stress-whitened clips.
   - Push the clips into place securely.

Fuel Pipe Protector Replacement

1. Remove the clips, then remove the fuel pipe protector (A). Take care not to scratch the body.

Fastener Locations

▷ : Clip, 4

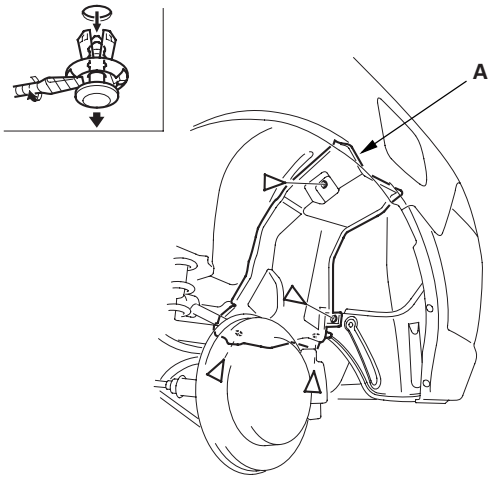

2. Install the protector in the reverse order of removal, and note these items:

   - Replace any damaged or stress-whitened clips.
   - Push the clips into place securely.

Rear Inner Fender Replacement

1. Release the wheel arch portion of the rear bumper, as necessary, '02-04 models (see page 20-95), '05-06 models (see page 20-96).

2. Remove the screw, then remove the rear inner fender (A). Take care not to scratch the body.

Fastener Location

▶ : Screw, 1

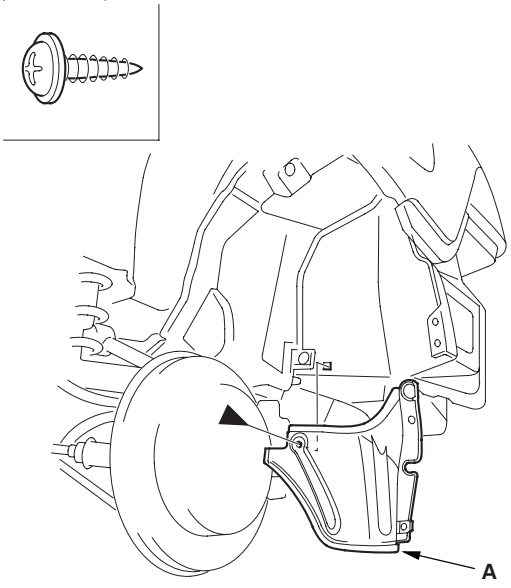

3. Install the inner fender in the reverse order of removal.

Rear Air Outlet Replacement

1. Remove the rear bumper, '02-04 models (see page 20-95), '05-06 models (see page 20-96).

2. Detach the hooks (A), then remove the rear air outlet (B). Take care not to scratch the body.

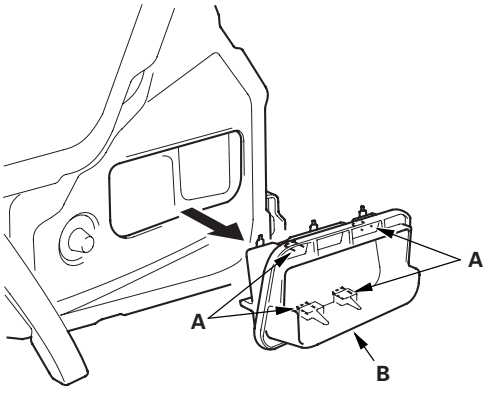

3. Install the air outlet by pushing on the hook portions until the hooks snap into place.

Component Location Index

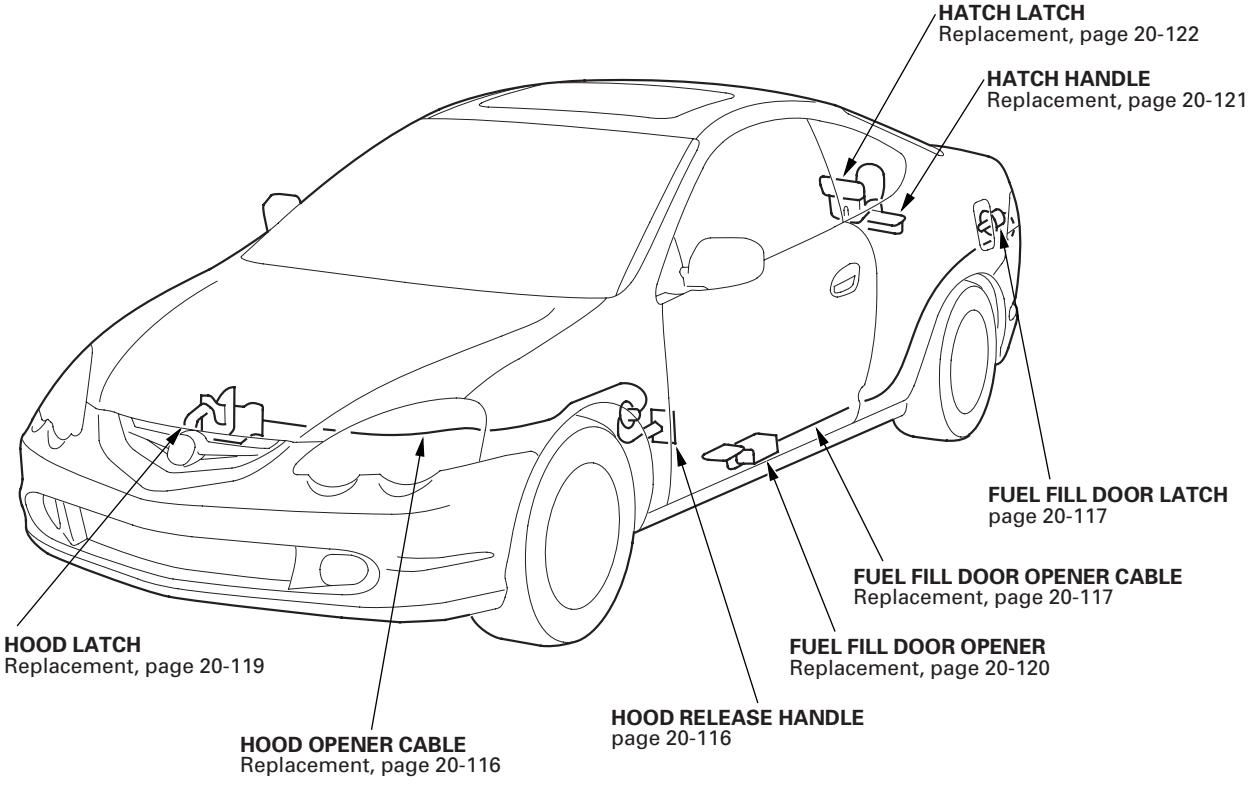

Hood Opener Cable Replacement

NOTE:
- Put on gloves to protect your hands.
- Take care not to scratch the body and related parts.

1. Remove these items from the left side of the vehicle:

   - Inner fender (see page 20-111)
   - Kick panel (see page 20-50)

2. Disconnect the hood opener cable (A) from the hood latch (B) (see page 20-119), and remove the bolts (C), then remove the hood release handle (D) from the body.

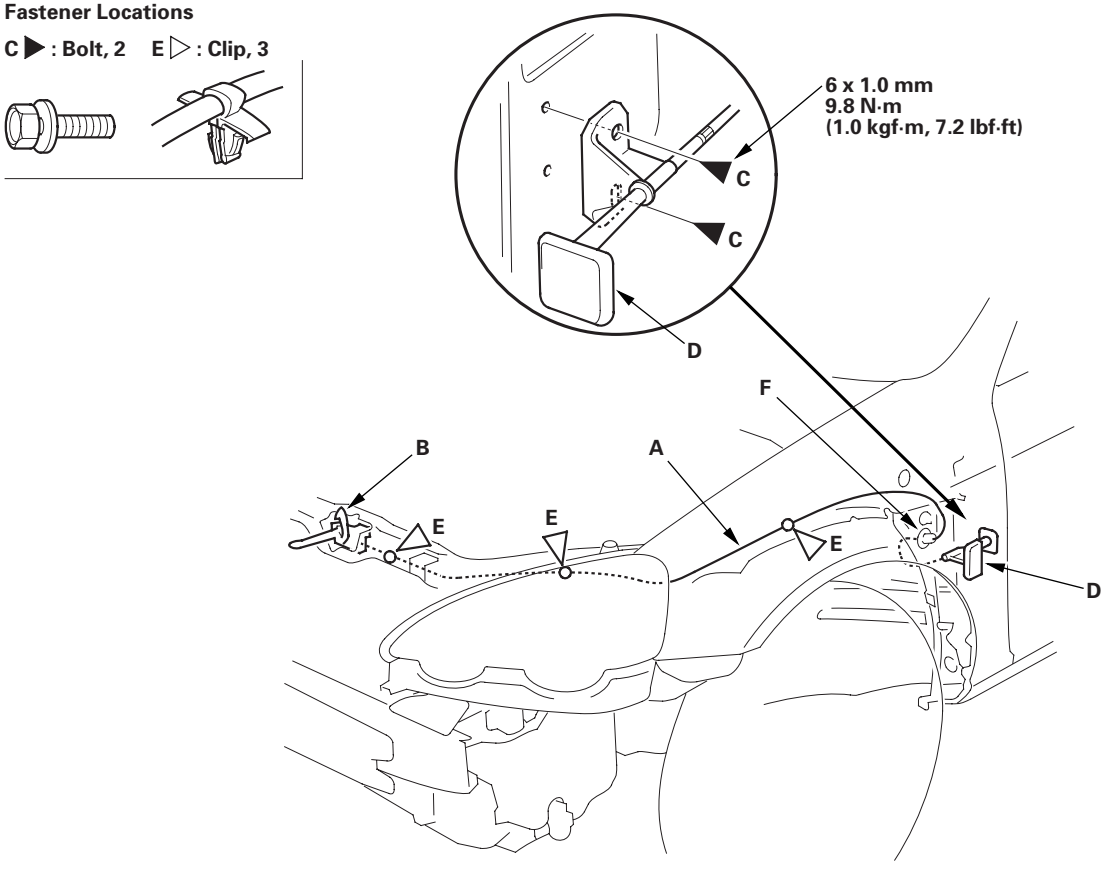

3. Using a clip remover, detach the clips (E), and remove the grommet (F) from the body, then remove the hood opener cable from the vehicle. Take care not to kink the cable.

4. Install the cable in the reverse order of removal, and replace any damaged or stress-whitened clips.

Fuel Fill Door Opener Cable Replacement

SRS components are located in this area. Review the SRS component locations (see page 23-10) and the precautions and procedures (see page 23-11) before performing repairs or service.

NOTE:
- Put on gloves to protect your hands.
- Take care not to scratch the body and related parts.

1. Remove these items from the left side of the vehicle:

   - Rear side trim panel (see page 20-51)
   - Cargo area side trim panel (see page 20-53)

2. Pull the carpet back as necessary (see page 20-57).

3. Disconnect the fuel fill door opener cable (A) from the opener (B) (see step 4 on page 20-120).

Fastener Locations

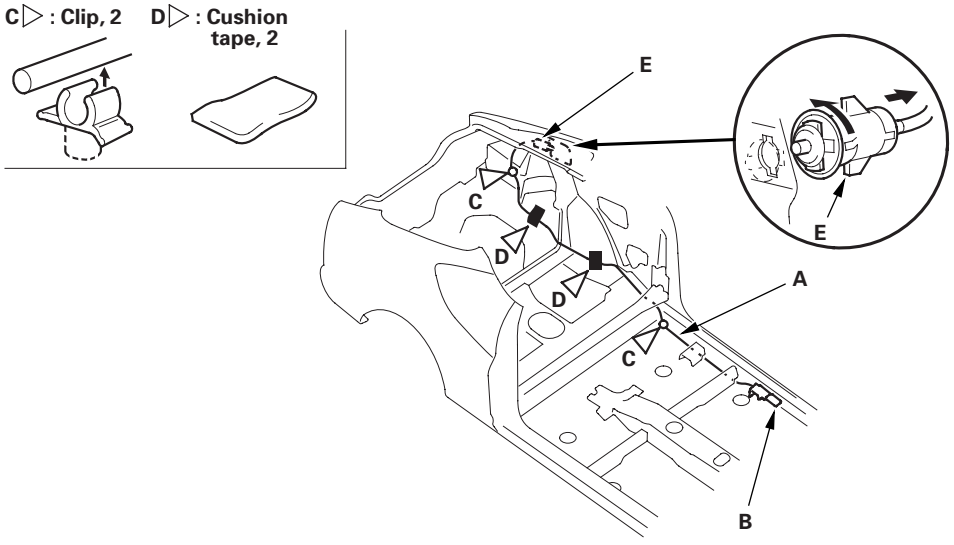

4. Remove the opener cable from the clips (C). Remove the cushion tape (D).

5. Remove the fuel fill door latch (E) from the body by turning it 90 °.

6. Remove the opener cable from the vehicle. Take care not to kink the cable.

(cont'd)

Fuel Fill Door Opener Cable Replacement (cont'd)

7. Install the opener cable in the reverse order of removal, and note these items:

   - Replace the cushion tape and any damaged or stress-whitened clips.
   - Align the mark (A) on the opener cable with the clip.
   - Make sure the fuel fill door opens properly and locks securely.

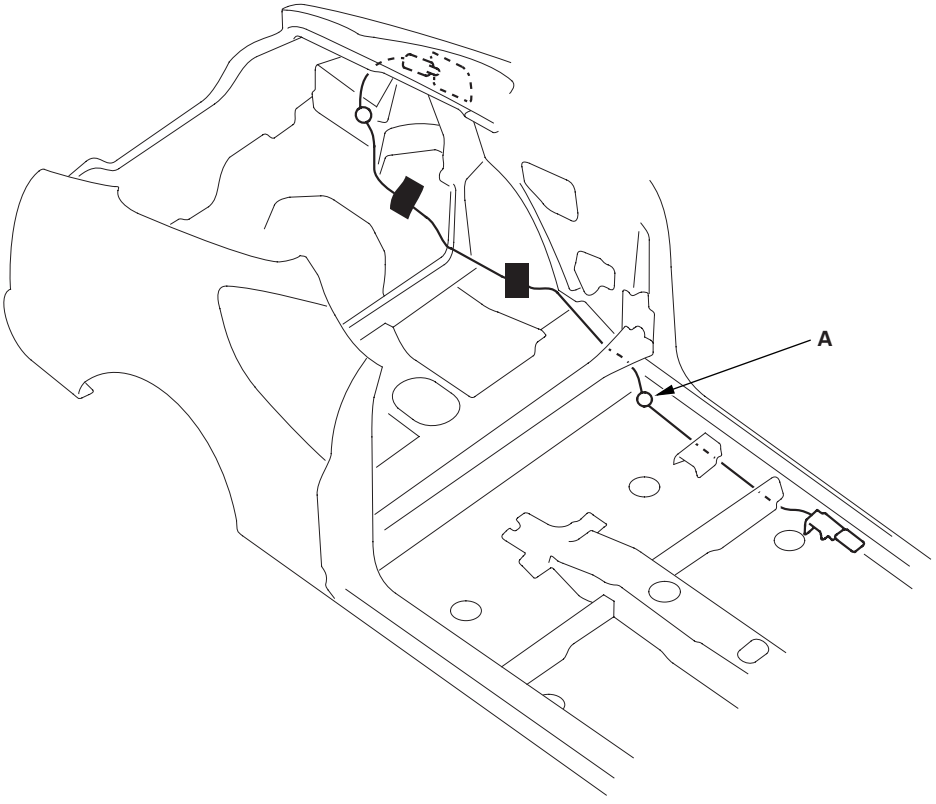

Hood Latch Replacement

NOTE:
- Put on gloves to protect your hands.
- Take care not to scratch the body.

1. Remove the front bumper, '02-04 models (see page 20-90), '05-06 models (see page 20-91).

2. Remove the bolts, then remove the hood latch (A) from the body.

Fastener Locations

▶ : Bolt, 3

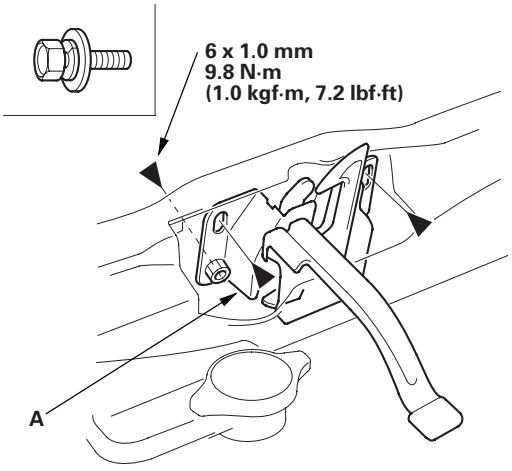

3. Disconnect the hood opener cable (A) from the hood latch. Take care not to kink the cable.

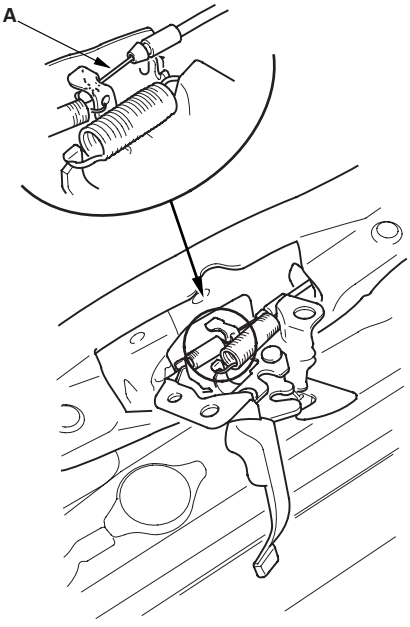

4. Detach the hood latch switch connector clip (A) from the body, and disconnect the hood latch switch connector (B), then remove the hood latch (C).

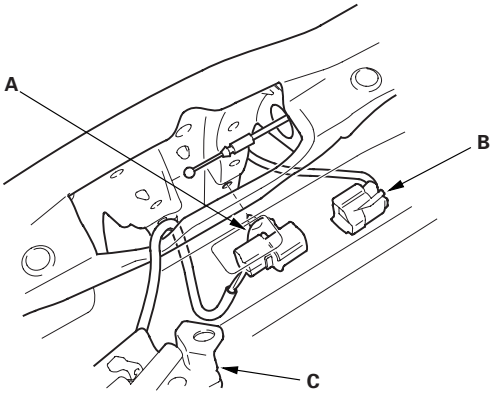

5. Install the latch in the reverse order of removal, and note these items:

   - Apply multipurpose grease to each location of the hood latch indicated by the arrows.
   - Make sure the hood latch switch connector is plugged in properly and the hood opener cable is connected properly.
   - Make sure the cable actuates the latch before you close the hood.
   - Adjust the hood latch alignment (see step 3 on page 20-97).
   - Make sure the hood opens properly and locks securely.

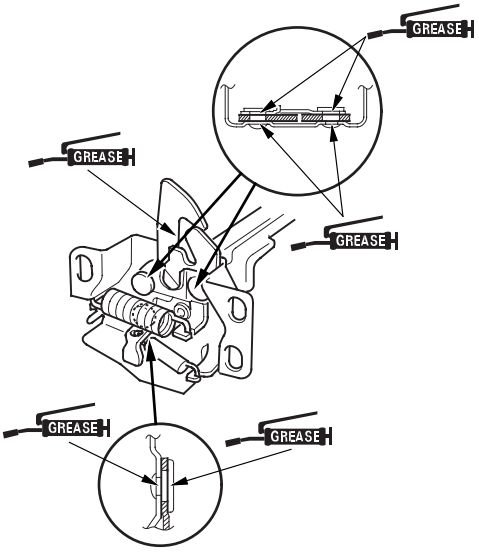

Fuel Fill Door Opener Replacement

NOTE: Put on gloves to protect your hands.

1. Slide the driver's front seat rearward fully.

2. Remove these items from the left side of the vehicle (see page 20-50):

   - Door sill trim
   - Kick panel

3. Pull the carpet back as necessary (see page 20-57).

4. Remove the bolts, then remove the fuel fill door opener (A) from the body.

Fastener Locations

▶ : Bolt, 2

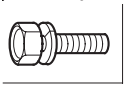

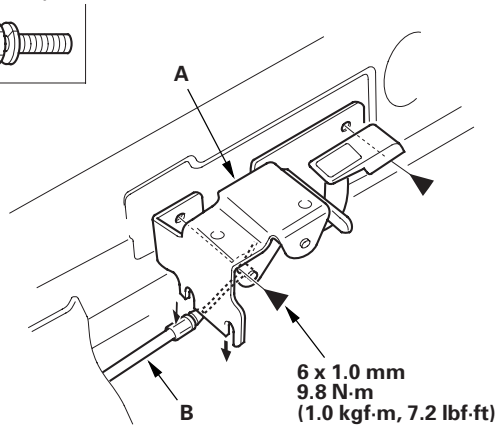

5. Disconnect the fuel fill door opener cable (B) from the opener, then remove the opener. Take care not to kink the cable.

6. Install the opener in the reverse order of removal, and note these items:

   - Make sure the opener cable is connected properly.
   - Make sure the fuel fill door opens properly and locks securely.

Hatch Handle Replacement

Special Tools Required
KTC trim tool set SOJATP2014

NOTE:
- Put on gloves to protect your hands.
- Use the appropriate tool from the KTC trim tool set to avoid damage when prying components.

1. Remove the hatch trim panel (see page 20-54).

2. Using a trim tool, gently pry out the hatch handle cover (A) to detach the hook (B) from each side.

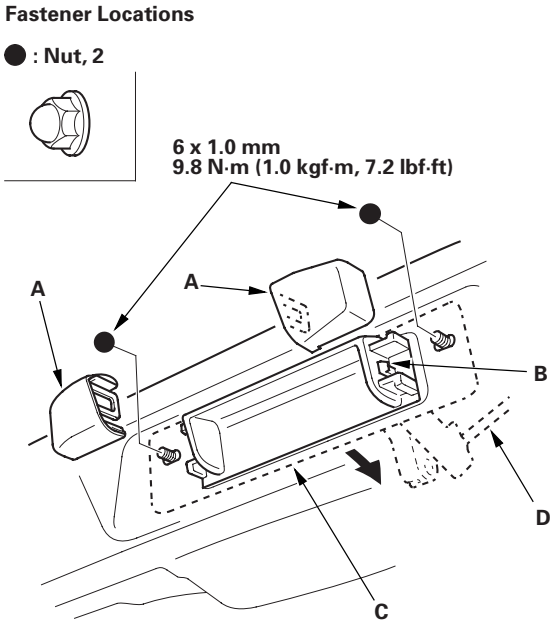

3. Remove the nuts, and pull the hatch handle (C) out through the hole in the hatch. Take care not to kink the hatch opener cable (D).

4. Disconnect the hatch opener cable (A) from the hatch handle (B), then remove the handle.

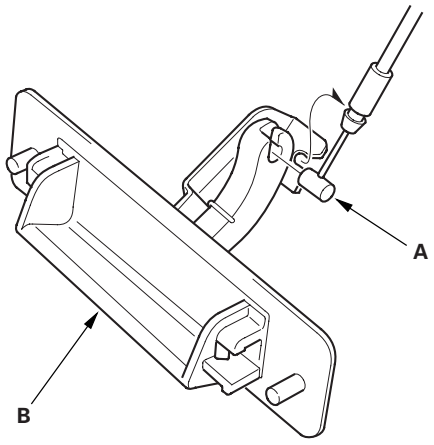

5. Install the handle in the reverse order of removal, and note these items:

   - Make sure the hatch opener cable is connected securely.
   - Make sure the hatch opens properly.

Hatch Latch Replacement

NOTE: Put on gloves to protect your hands.

1. Remove the hatch trim panel (see page 20-54).

2. Disconnect the hatch lock actuator connectors (A) and hatch latch switch connector (B), and detach the hatch latch switch connector from the hatch.

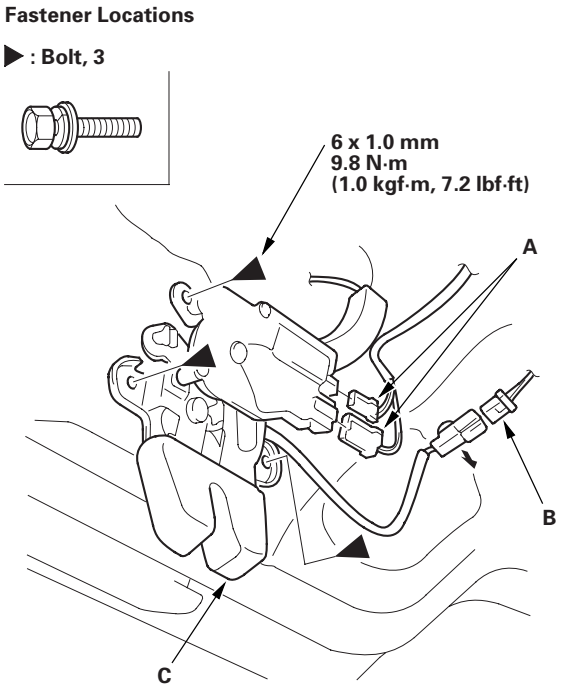

3. While holding the hatch latch (C), remove the bolts, then remove the latch from the hatch.

4. Disconnect the hatch opener cable (A) from the latch and the bushing (B).

   NOTE: Check the bushing for damage and replace if necessary.

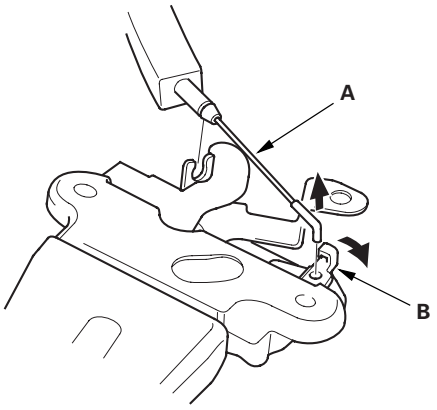

5. Install the latch in the reverse order of removal, and note these items:

   - Make sure each connector is plugged in properly, and the cable is connected properly.
   - Make sure the cable actuates the latch before you close the hatch.
   - Make sure the hatch opens properly and locks securely.

Subframe Replacement

Subframe Torque

After loosening the subframe mounting bolts, be sure to replace them with new ones.

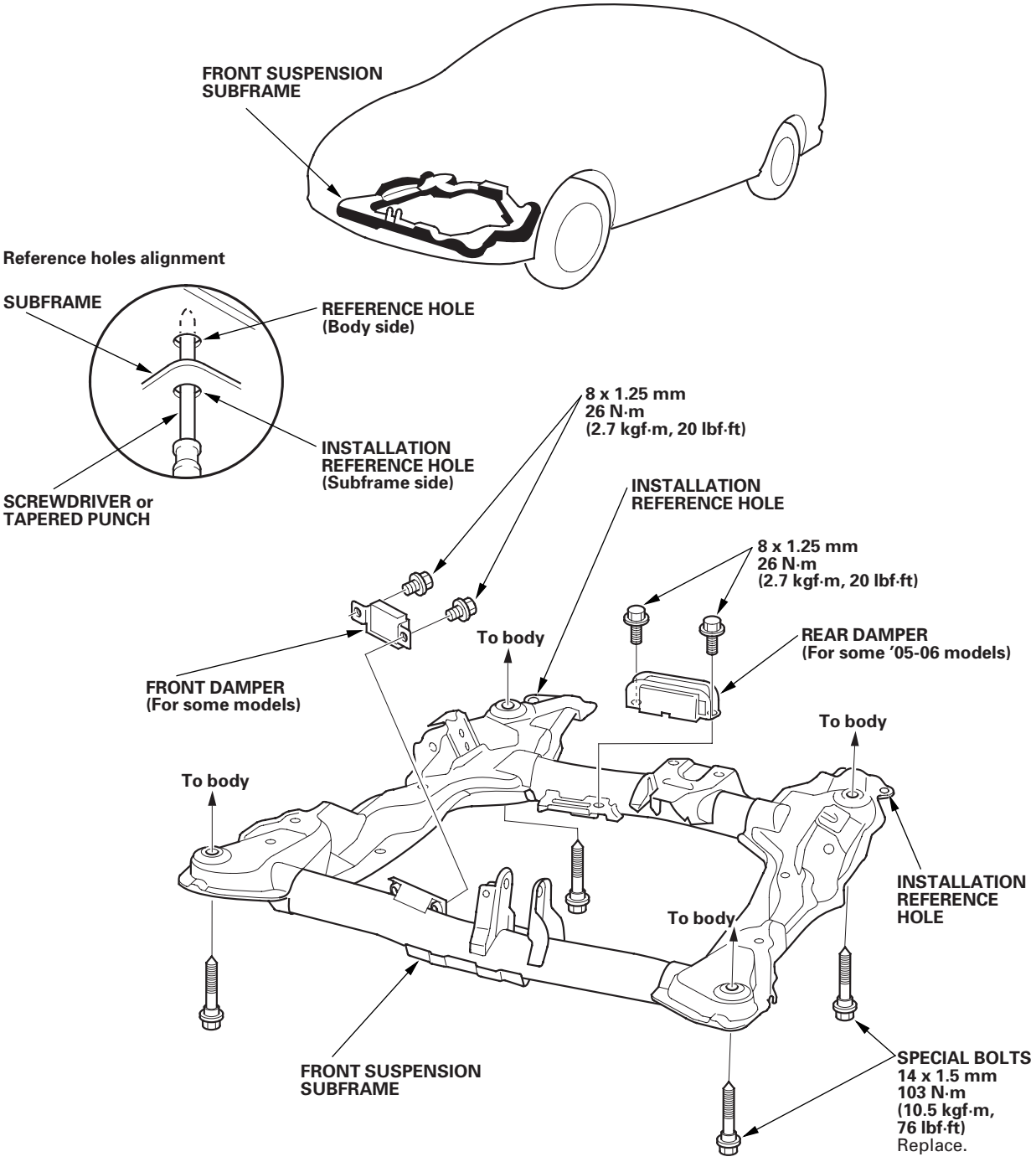

Frame Brace and Gusset Replacement

Brace and Gusset

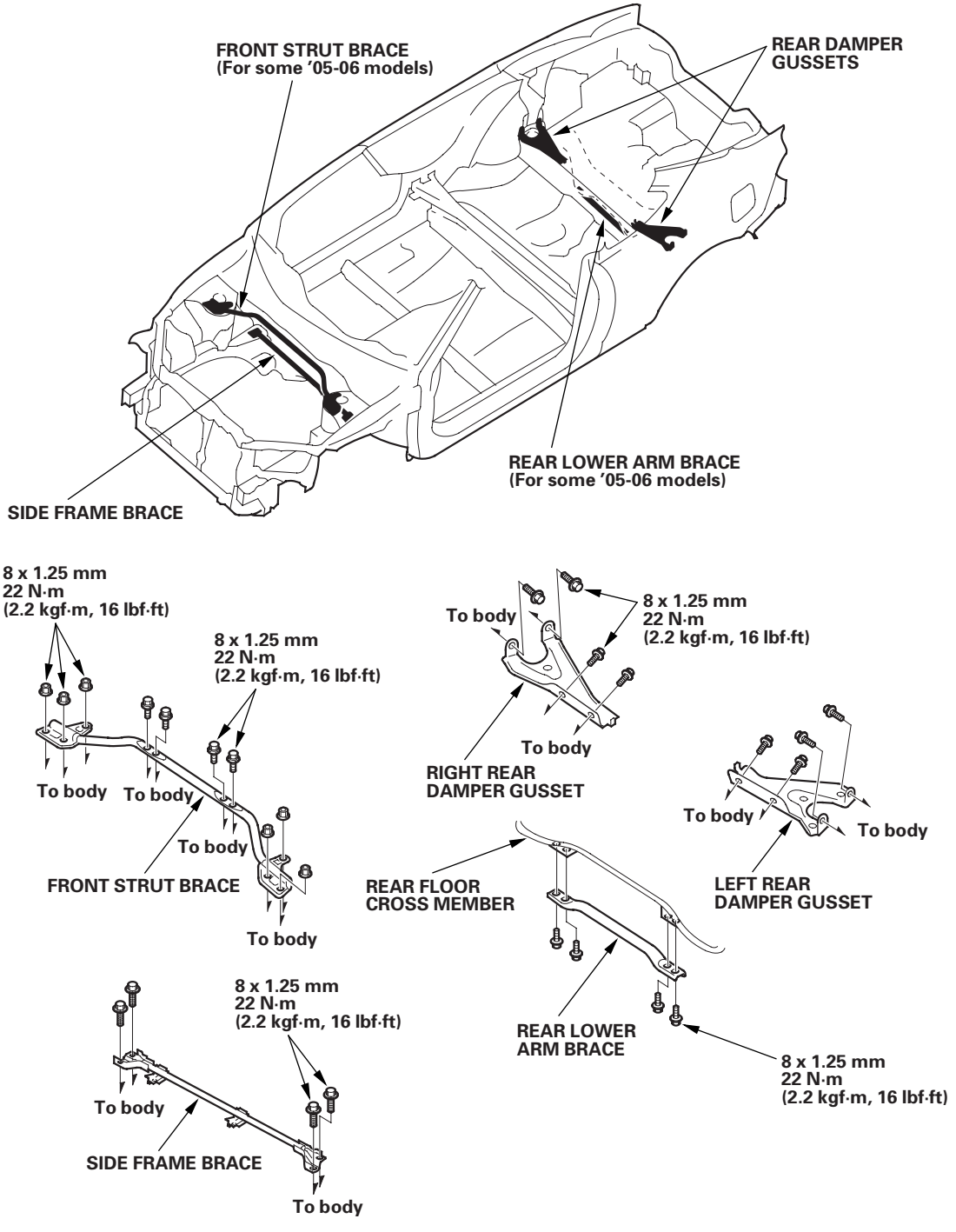

Frame Repair Chart

Top View

Unit: mm (in.)
ø: Inner diameter

a	For subframe ø15 (0.59)	g1	For M/T transmission mount ø13 (0.51)
b	For engine mount ø13 (0.51)	g2	For A/T transmission mount ø13 (0.51)
c	For engine mount ø13 (0.51)	h	For damper mount ø11.5 (0.45)
d	For engine mount ø13 (0.51)	i	For damper center ø78 (3.07)
e1	For M/T transmission mount ø13 (0.51)	j	For damper mount ø11.5 (0.45)
e2	For A/T transmission mount ø13 (0.51)	k	For damper mount ø11.5 (0.45)
f1	For M/T transmission mount ø13 (0.51)	m	For subframe ø15 (0.59)
f2	For A/T transmission mount ø13 (0.51)	n	Locating hole ø25 (0.98)

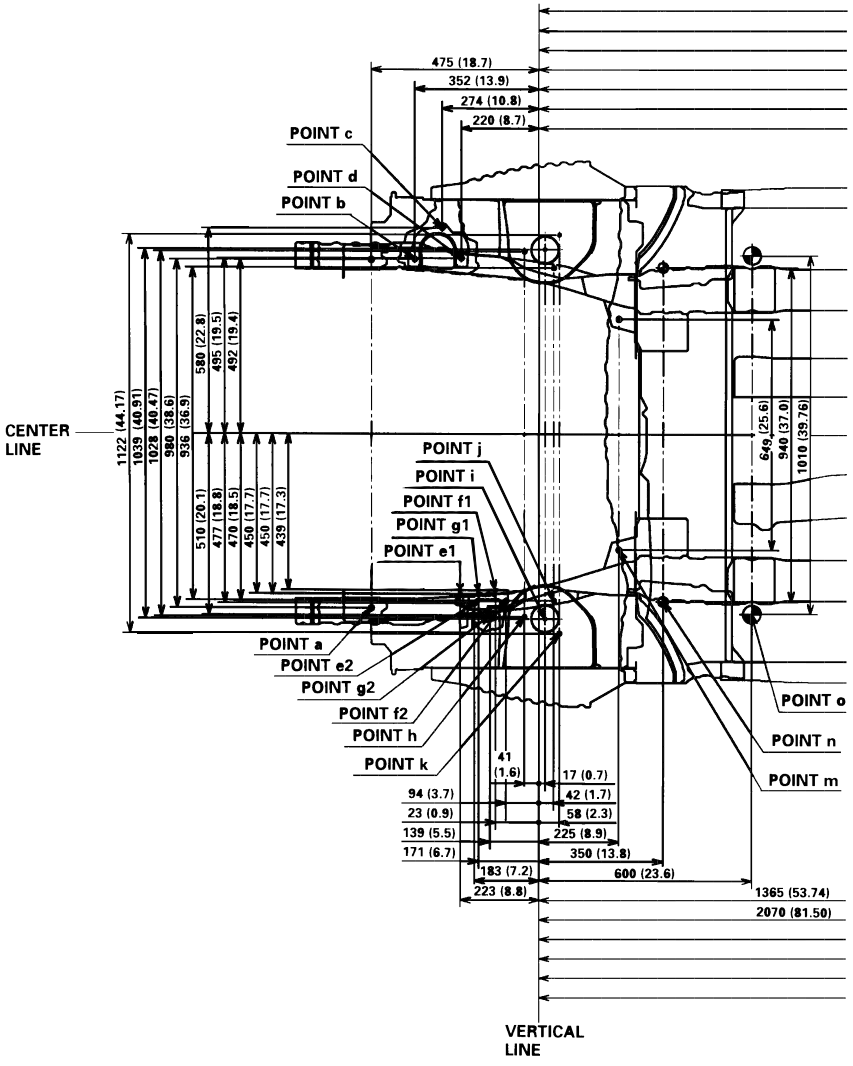

o	Locating hole ø50 (1.97)	x	For trailing arm ø13 (0.51)
p	Locating hole ø25 (0.98)	y	For upper arm bracket center ø15 (0.59)
r	For trailing arm ø13 (0.51)	z1, z2	Locating hole ø13 (0.51)
s	Locating hole ø25 (0.98)	a1	For upper arm ø13 (0.51)
t	Locating hole ø20 (0.79)	b1	For rear lower arm center
u	Trailing arm center	c1	Locating hole ø50 (1.97)
v	Rear damper center	d1	Locating hole ø20 (0.79)
w	For upper arm ø13 (0.51)		

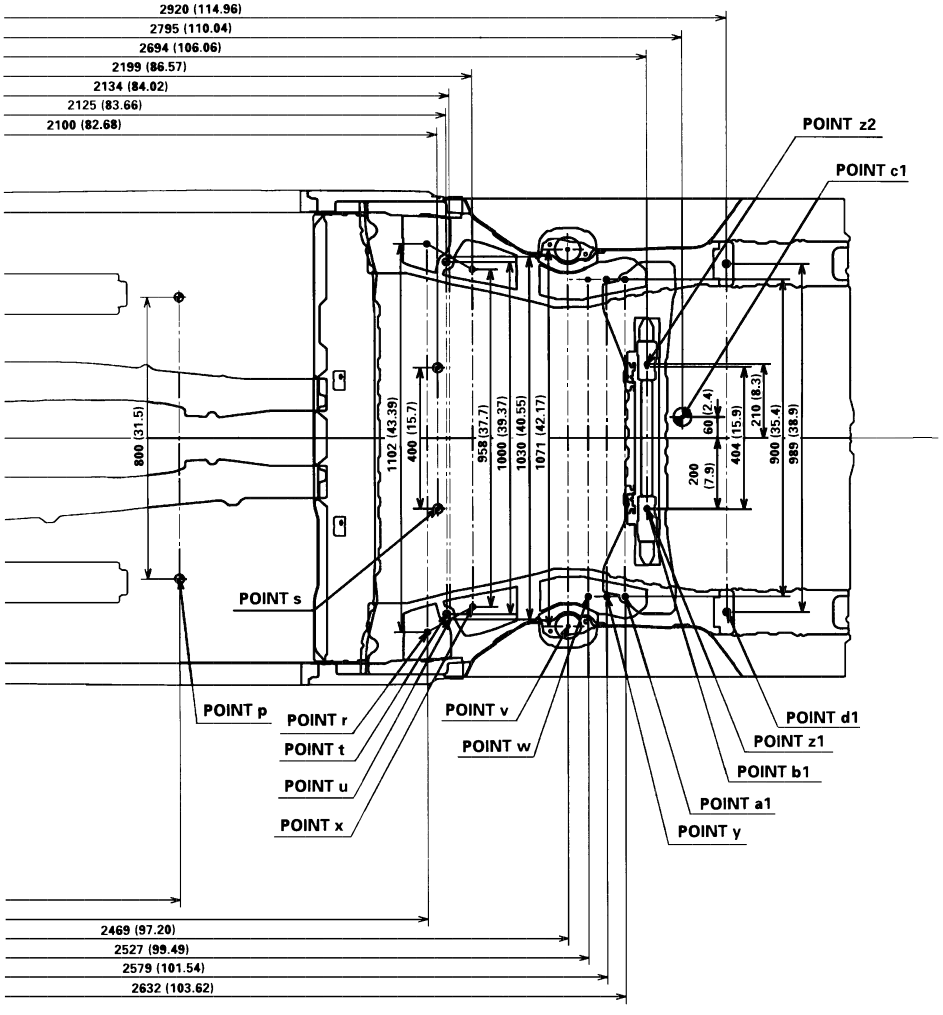

(cont'd)

Frame Repair Chart (cont'd)

Side View

Unit: mm (in.)	a	For subframe ø15 (0.59)	g1	For M/T transmission mount ø13 (0.51)
ø: Inner diameter	b	For engine mount ø13 (0.51)	g2	For A/T transmission mount ø13 (0.51)
	c	For engine mount ø13 (0.51)	h	For damper mount ø11.5 (0.45)
	d	For engine mount ø13 (0.51)	i	For damper center ø78 (3.07)
	e1	For M/T transmission mount ø13 (0.51)	j	For damper mount ø11.5 (0.45)
	e2	For A/T transmission mount ø13 (0.51)	k	For damper mount ø11.5 (0.45)
	f1	For M/T transmission mount ø13 (0.51)	m	For subframe ø15 (0.59)
	f2	For A/T transmission mount ø13 (0.51)	n	Locating hole ø25 (0.98)

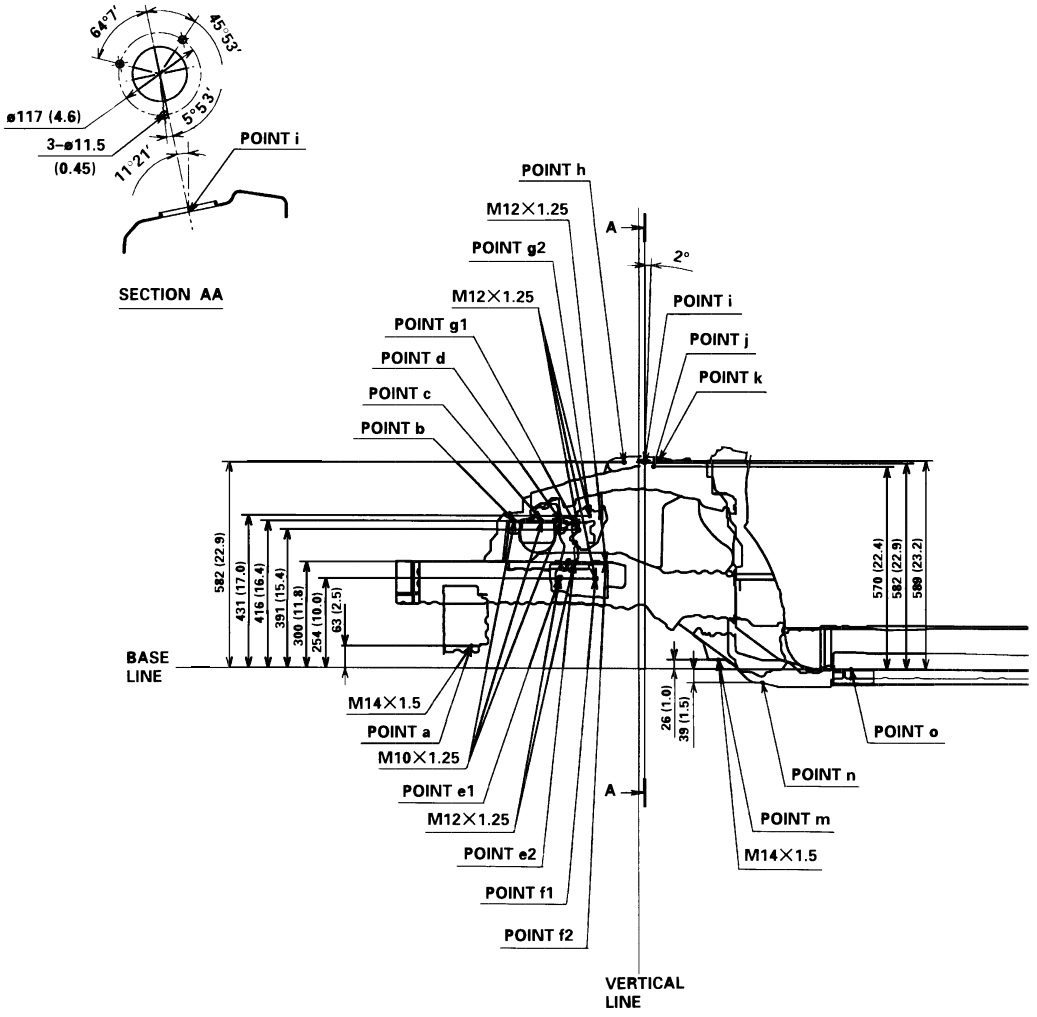

o	Locating hole ø50 (1.97)	x	For trailing arm ø13 (0.51)
p	Locating hole ø25 (0.98)	y	For upper arm bracket center ø15 (0.59)
r	For trailing arm ø13 (0.51)	z1, z2	Locating hole ø13 (0.51)
s	Locating hole ø25 (0.98)	a1	For upper arm ø13 (0.51)
t	Locating hole ø20 (0.79)	b1	For rear lower arm center
u	Trailing arm center	c1	Locating hole ø50 (1.97)
v	Rear damper center	d1	Locating hole ø20 (0.79)
w	For upper arm ø13 (0.51)		

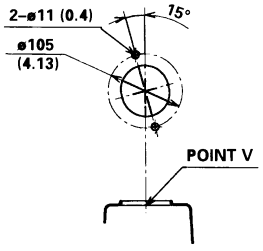

SECTION BB

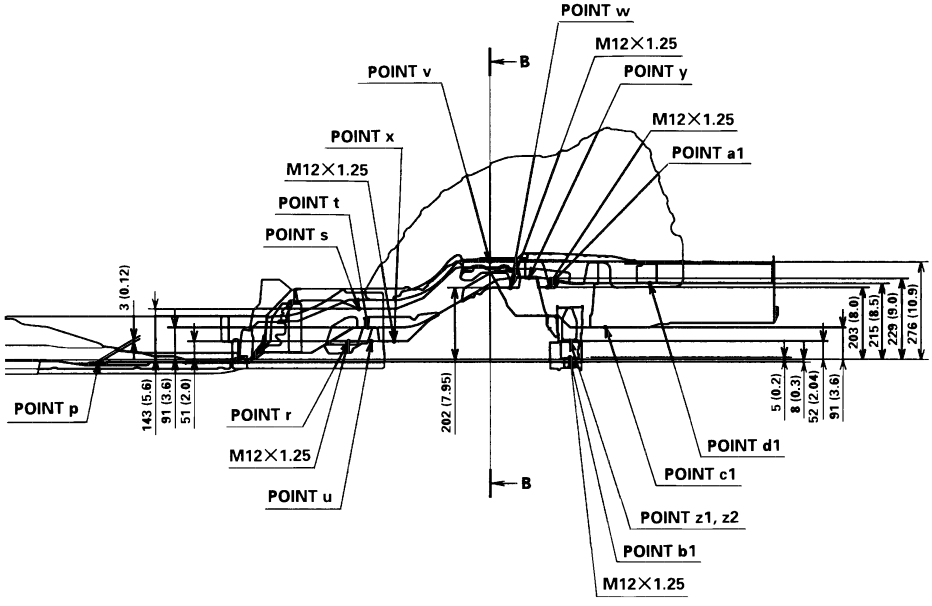

Component Location Index

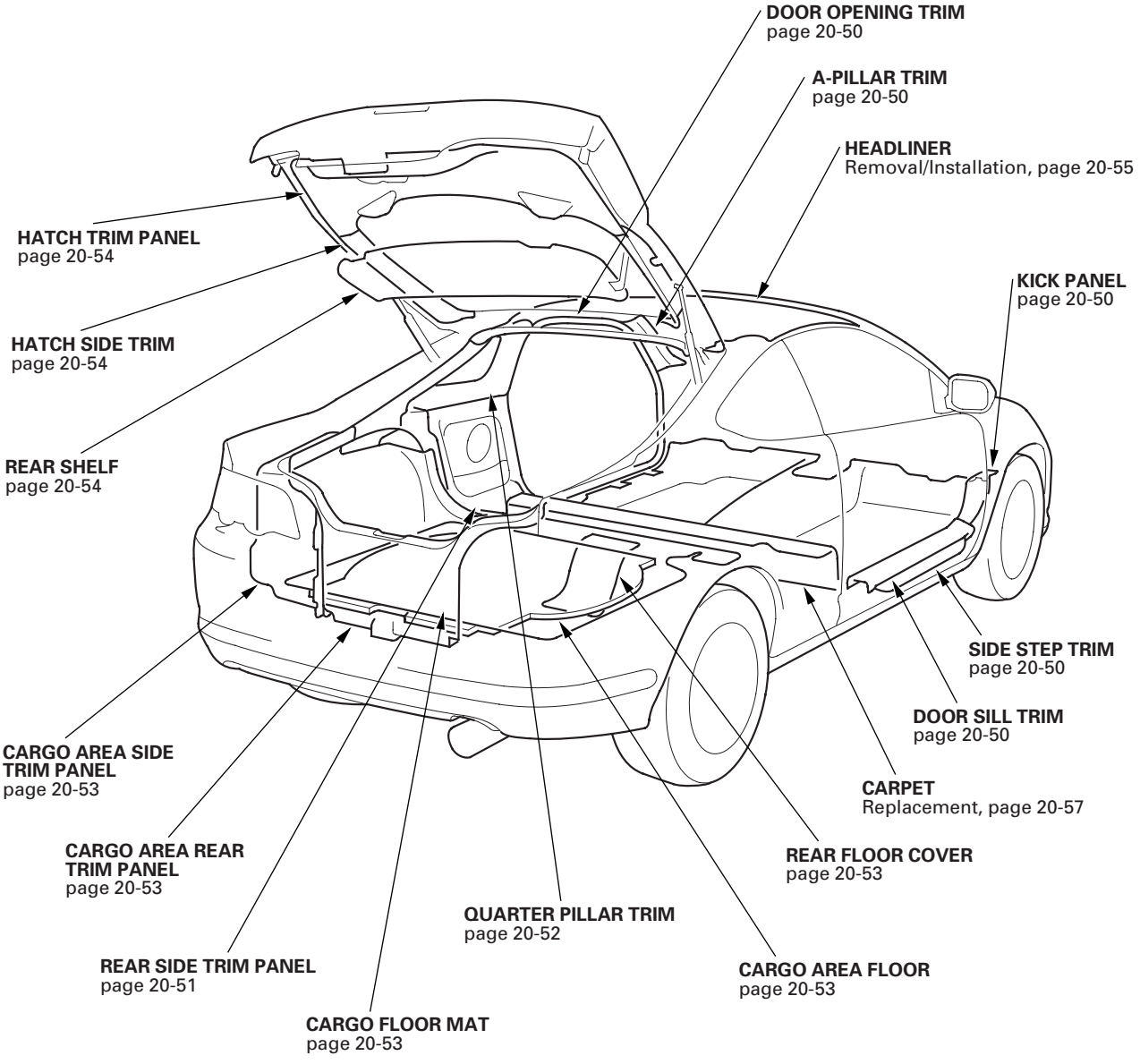

HVAC (Heating, Ventilation, and Air Conditioning)

HVAC (Heating, Ventilation, and Air Conditioning)

Special Tools 21-2

Climate Control

Component Location Index 21-3
A/C Service Tips and Precautions 21-6
A/C Refrigerant Oil Replacement 21-6
General Troubleshooting Information 21-8
DTC Troubleshooting Index 21-9
Symptom Troubleshooting Index 21-10
System Description 21-11
Circuit Diagram 21-14
DTC Troubleshooting 21-16
Recirculation Control Motor Circuit Troubleshooting 21-30
ECT Sensor Circuit Troubleshooting 21-31
Climate Control Power and Ground Circuit Troubleshooting 21-32
A/C Condenser Fan Circuit Troubleshooting 21-33
Radiator and Condenser Fan Common Circuit Troubleshooting 21-35
A/C Compressor Clutch Circuit Troubleshooting 21-36
A/C Pressure Switch Circuit Troubleshooting 21-38
In-car Temperature Sensor Test 21-41
In-car Temperature Sensor Replacement 21-41
Outside Air Temperature Sensor Test 21-42
Outside Air Temperature Sensor Replacement 21-42
Sunlight Sensor Test 21-43
Sunlight Sensor Replacement ... 21-43
Evaporator Temperature Sensor Test 21-44
Evaporator Temperature Sensor Replacement 21-44
Air Mix Control Motor Test 21-45
Air Mix Control Motor Replacement 21-45
Mode Control Motor Test 21-46
Mode Control Motor Replacement 21-46
Recirculation Control Motor Test 21-47
Recirculation Control Motor Replacement 21-47
Power Transistor Test 21-48
Climate Control Unit Removal and Installation 21-48
Climate Control Unit Bulb Replacement 21-49
Dust and Pollen Filter Replacement 21-49
Blower Unit Removal and Installation 21-50
Blower Unit Component Replacement 21-51
Evaporator Core Replacement ... 21-52
*Heater Unit/Core Replacement 21-53
Heater Valve Cable Adjustment 21-55
A/C Compressor Replacement ... 21-56
A/C Compressor Clutch Check ... 21-57
A/C Compressor Clutch Overhaul 21-58
A/C Compressor Thermal Protector Replacement 21-60
A/C Compressor Relief Valve Replacement 21-60
A/C Condenser Replacement 21-61
Refrigerant Recovery 21-62
System Evacuation 21-63
System Charging 21-64
Refrigerant Leak Test 21-65
A/C System Test 21-66

Special Tools

Ref. No.	Tool Number	Description	Qty
①	07SAZ-001000A	Backprobe Set	2

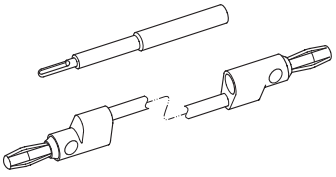

①

Component Location Index

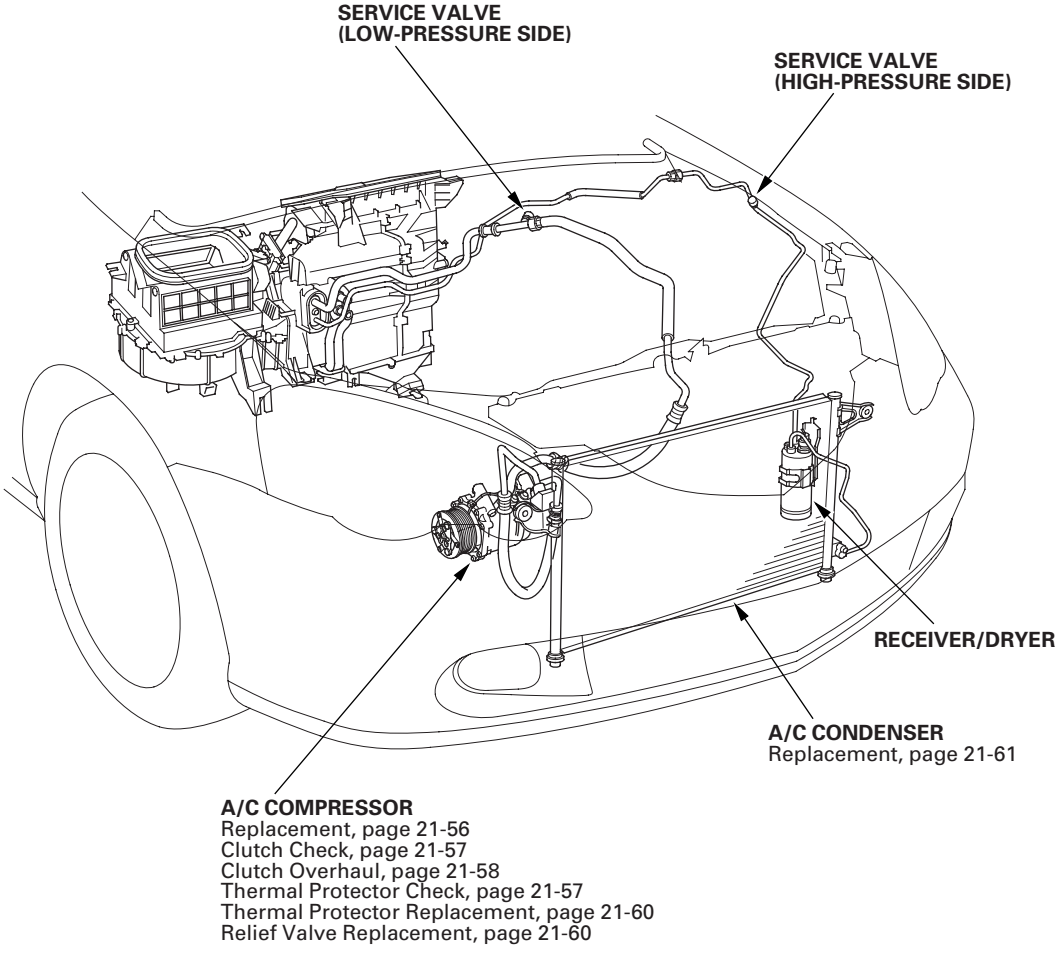

(cont'd)

Component Location Index (cont'd)

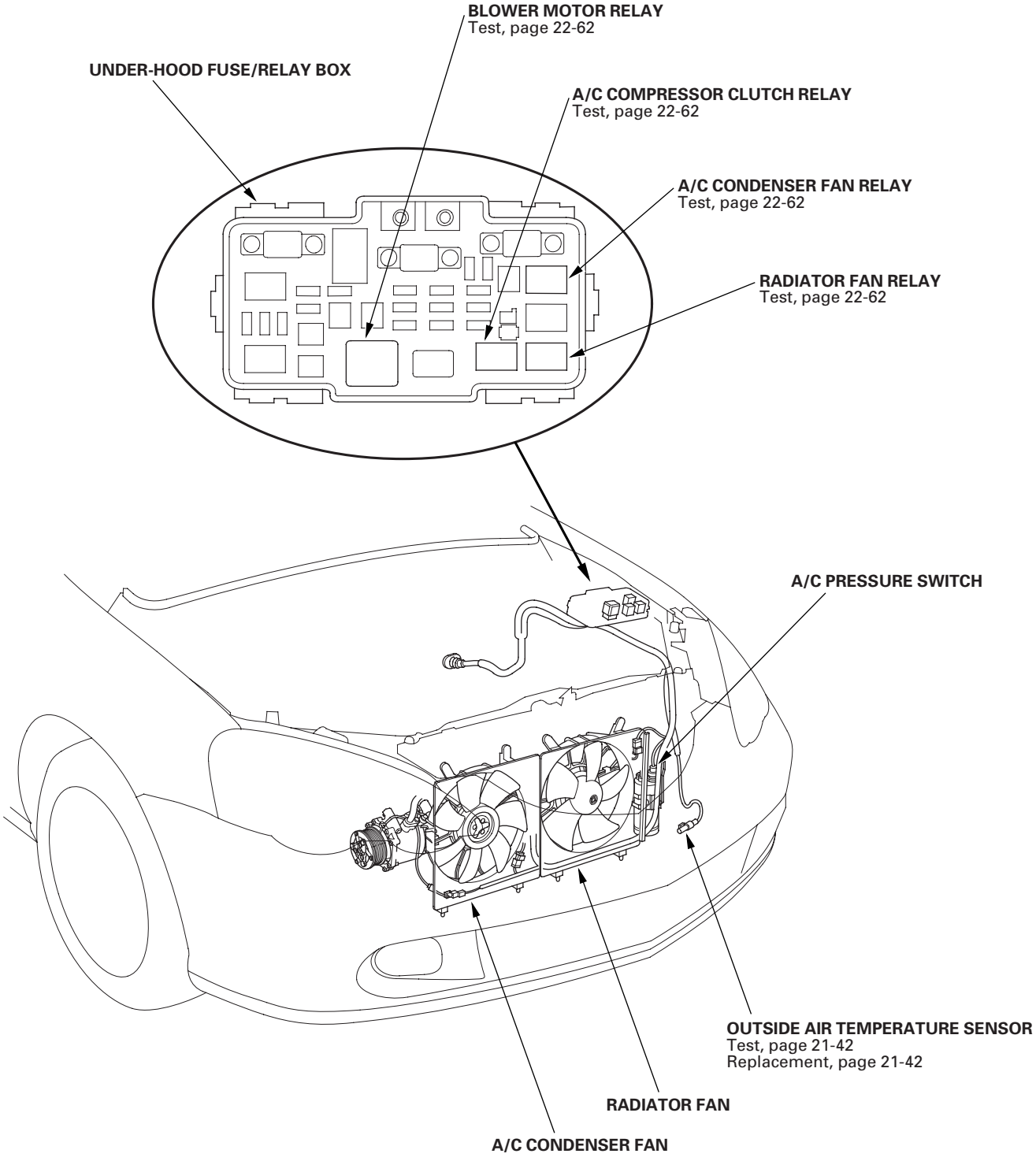

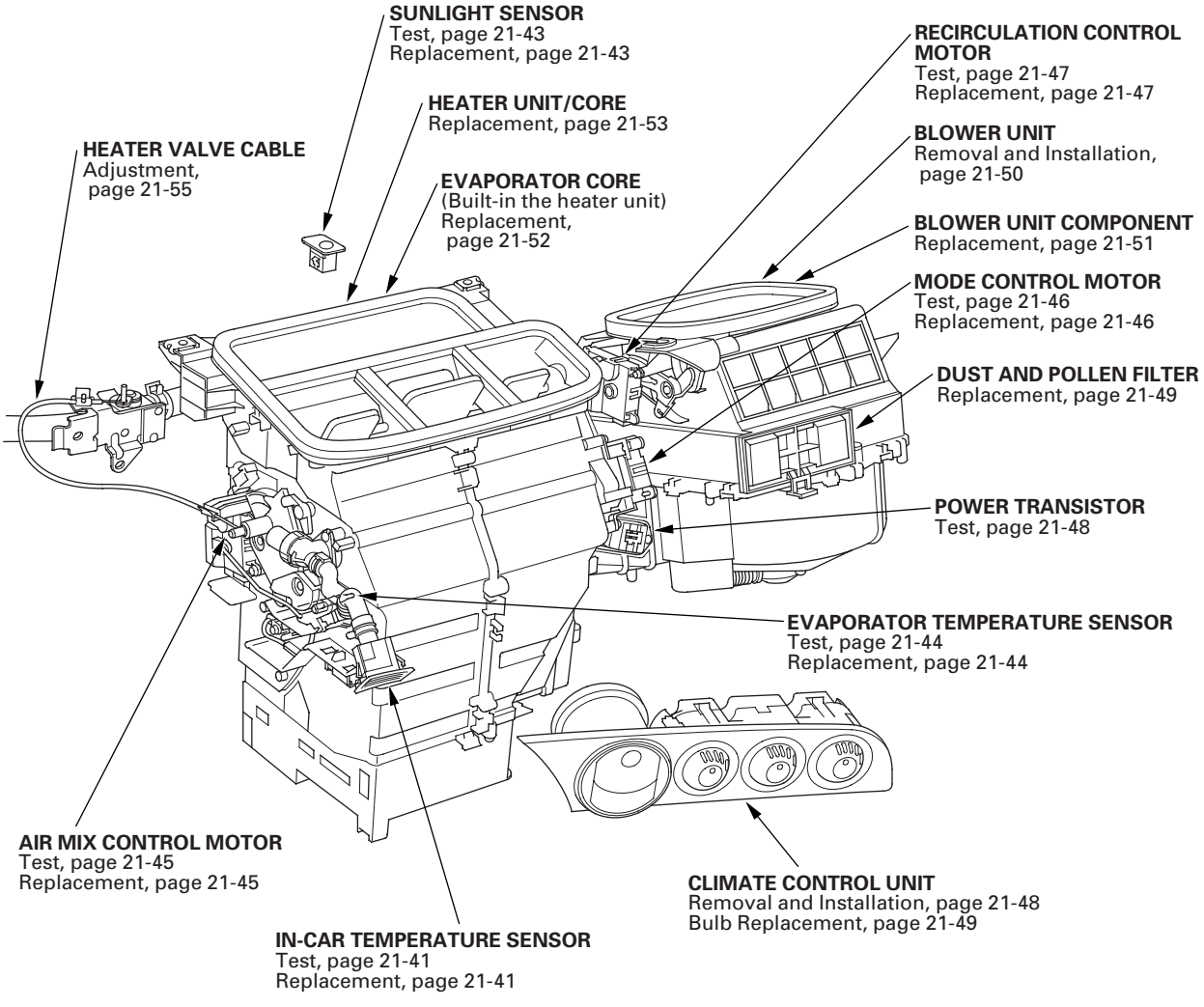
SUNLIGHT SENSOR
Test, page 21-43
Replacement, page 21-43
HEATER UNIT/CORE
Replacement, page 21-53
HEATER VALVE CABLE
Adjustment,
page 21-55
EVAPORATOR CORE
(Built-in the heater unit)
Replacement,
page 21-52
RECIRCULATION CONTROL MOTOR
Test, page 21-47
Replacement, page 21-47
BLOWER UNIT
Removal and Installation,
page 21-50
BLOWER UNIT COMPONENT
Replacement, page 21-51
MODE CONTROL MOTOR
Test, page 21-46
Replacement, page 21-46
DUST AND POLLEN FILTER
Replacement, page 21-49
POWER TRANSISTOR
Test, page 21-48
EVAPORATOR TEMPERATURE SENSOR
Test, page 21-44
Replacement, page 21-44
AIR MIX CONTROL MOTOR
Test, page 21-45
Replacement, page 21-45
CLIMATE CONTROL UNIT
Removal and Installation, page 21-48
Bulb Replacement, page 21-49
IN-CAR TEMPERATURE SENSOR
Test, page 21-41
Replacement, page 21-41

A/C Service Tips and Precautions

⚠ WARNING

- Compressed air mixed with R-134a forms a combustible vapor.
- The vapor can burn or explode causing serious injury.
- Never use compressed air to pressure test R-134a service equipment or vehicle air conditioning systems.

⚠ CAUTION

- Air conditioning refrigerant or lubricant vapor can irritate your eyes, nose, or throat.
- Be careful when connecting service equipment.
- Do not breathe refrigerant or vapor.

The air conditioning system uses HFC-134a (R-134a) refrigerant and polyalkyleneglycol (PAG) refrigerant oil, which are not compatible with CFC-12 (R-12) refrigerant and mineral oil. Do not use R-12 refrigerant or mineral oil in this system, and do not attempt to use R-12 servicing equipment; damage to the air conditioning system or your servicing equipment will result.
Use only service equipment that is U.L.-listed and is certified to meet the requirements of SAE J2210 to remove R-134a from the air conditioning system.

If accidental system discharge occurs, ventilate work area before resuming service.

R-134a service equipment or vehicle air conditioning systems should not be pressure tested or leak tested with compressed air.

Additional health and safety information may be obtained from the refrigerant and lubricant manufacturers.

- Always disconnect the negative cable from the battery whenever replacing air conditioning parts.
- Keep moisture and dirt out of the system. When disconnecting any lines, plug or cap the fittings immediately; don't remove the caps or plugs until just before you reconnect each line.
- Before connecting any hose or line, apply a few drops of refrigerant oil to the O-ring.
- When tightening or loosening a fitting, use a second wrench to support the matching fitting.
- When discharging the system, use an R-134a refrigerant recovery/recycling/charging station; don't release refrigerant into the atmosphere.

A/C Refrigerant Oil Replacement

Recommended PAG oil: KEIHIN SP-10:

- P/N 38897-P13-A01AH: 120 mL (4 fl·oz)
- P/N 38899-P13-A01: 40 mL (1 1/3 fl·oz)

Add the recommended refrigerant oil in the amount listed if you replace any of the following parts.

- To avoid contamination, do not return the oil to the container once dispensed, and never mix it with other refrigerant oils.
- Immediately after using the oil, reinstall the cap on the container, and seal it to avoid moisture absorption.
- Do not spill the refrigerant oil on the vehicle; it may damage the paint. If it gets on the paint, wash it off immediately.

A/C condenser ..... 25 mL (5/6 fl·oz)
Evaporator ..... 45 mL (1 1/2 fl·oz)
Line or hose ..... 10 mL (1/3 fl·oz)
Receiver/Dryer ..... 10 mL (1/3 fl·oz)
Leakage repair ..... 25 mL (5/6 fl·oz)
A/C compressor ..... For A/C compressor replacement, subtract the volume of oil drained from the removed A/C compressor from 130 mL (4 1/3 fl·oz), and drain the calculated volume of oil from the new A/C compressor: 130 mL (4 1/3 fl·oz) — Volume of removed A/C compressor = Volume to drain from new A/C compressor.

NOTE: Even if no oil is drained from the removed A/C compressor, don't drain more than 50 mL (1 2/3 fl·oz) from the new A/C compressor.

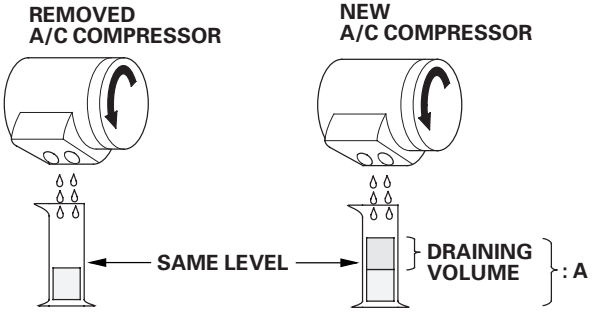

A: 130 mL (4 1/3 fl·oz)

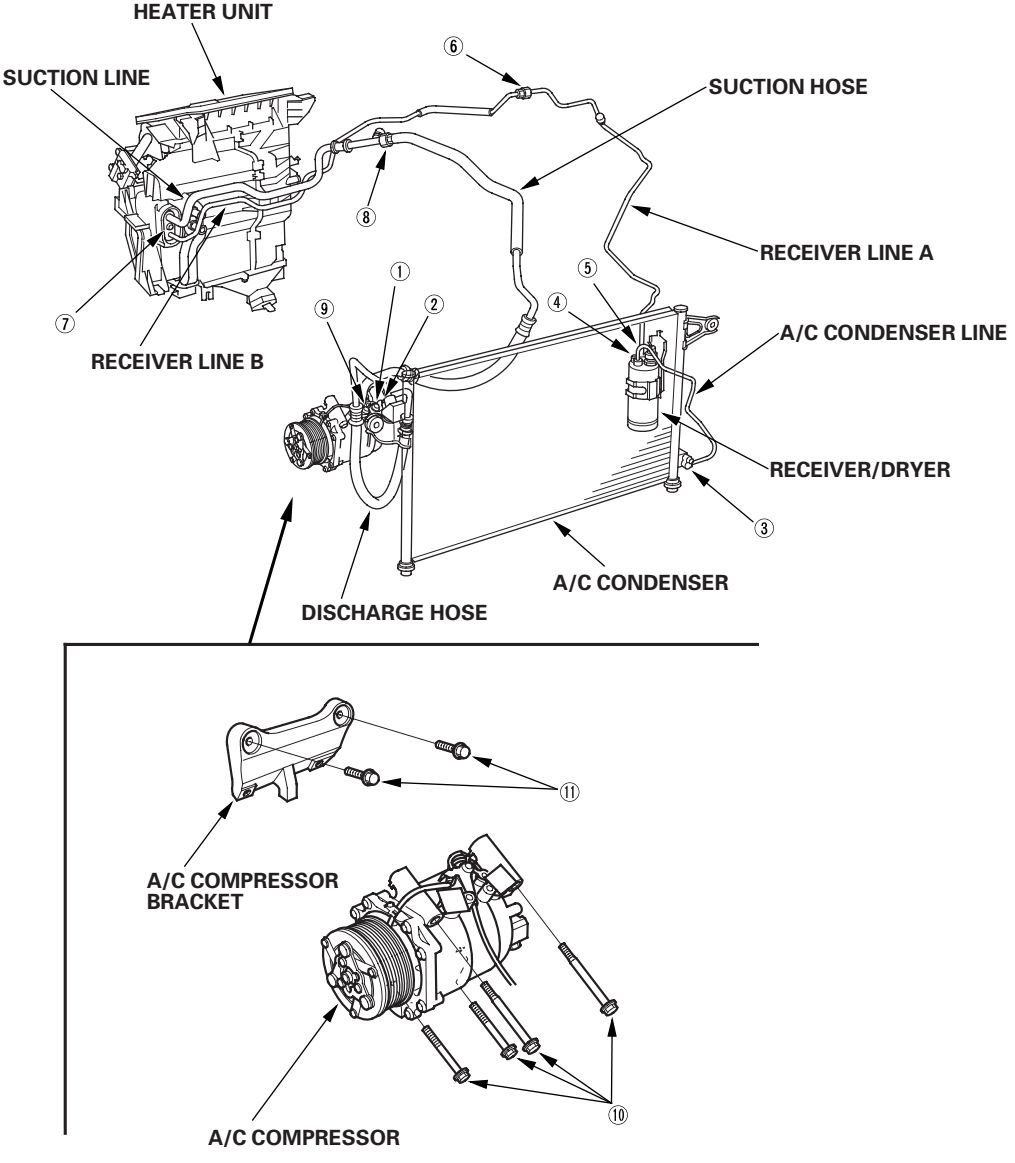

① Discharge hose to the A/C compressor (6 x 1.0 mm): 9.8 N·m (1.0 kgf·m, 7.2 lbf·ft)
② Discharge hose to the A/C condenser (6 x 1.0 mm): 9.8 N·m (1.0 kgf·m, 7.2 lbf·ft)
③ A/C condenser line to the A/C condenser (6 x 1.0 mm): 9.8 N·m (1.0 kgf·m, 7.2 lbf·ft)
④ A/C condenser line to the receiver/dryer (6 x 1.0 mm): 9.8 N·m (1.0 kgf·m, 7.2 lbf·ft)
⑤ Receiver line A to the receiver/dryer (6 x 1.0 mm): 9.8 N·m (1.0 kgf·m, 7.2 lbf·ft)
⑥ Receiver line A to the receiver line B: 13 N·m (1.3 kgf·m, 9.4 lbf·ft)
⑦ Receiver line B and the suction line to the evaporator (6 x 1.0 mm): 9.8 N·m (1.0 kgf·m, 7.2 lbf·ft)
⑧ Suction line to the suction hose: 31 N·m (3.2 kgf·m, 23 lbf·ft)
⑨ Suction hose to the A/C compressor (6 x 1.0 mm): 9.8 N·m (1.0 kgf·m, 7.2 lbf·ft)
⑩ A/C compressor to the A/C compressor bracket (8 x 1.25 mm): 22 N·m (2.2 kgf·m, 16 lbf·ft)
⑪ A/C compressor bracket to the engine block (10 x 1.25 mm): 44 N·m (4.5 kgf·m, 33 lbf·ft)

General Troubleshooting Information

How to Retrieve a DTC

The Climate Control Unit has a self-diagnostic function. To run the self-diagnostic function, do the following:

1. Turn the ignition switch OFF.

2. Turn the fan switch OFF, the temperature control dial to Max Cool (58 °F or 18 °C), and the mode control dial to Vent.

3. Turn the ignition switch ON (II), then press and hold the recirculation control switch. Within 10 seconds while holding the switch down, press the rear window defogger switch five times. The recirculation indicator blinks two times and the A/C indicator comes on, then the self-diagnostic will begin. About 15 seconds later, the self-diagnostic will finish and the A/C indicator goes off. If there is any problem in the system after finished self-diagnostic, the recirculation indicator will blink the Diagnostic Trouble Code (DTC) 1 through 13. When problems in the evaporator temperature sensor circuit are detected (codes 14 and 15), the A/C indicator will blink the DTC. If no DTCs are found, the indicator will not blink.

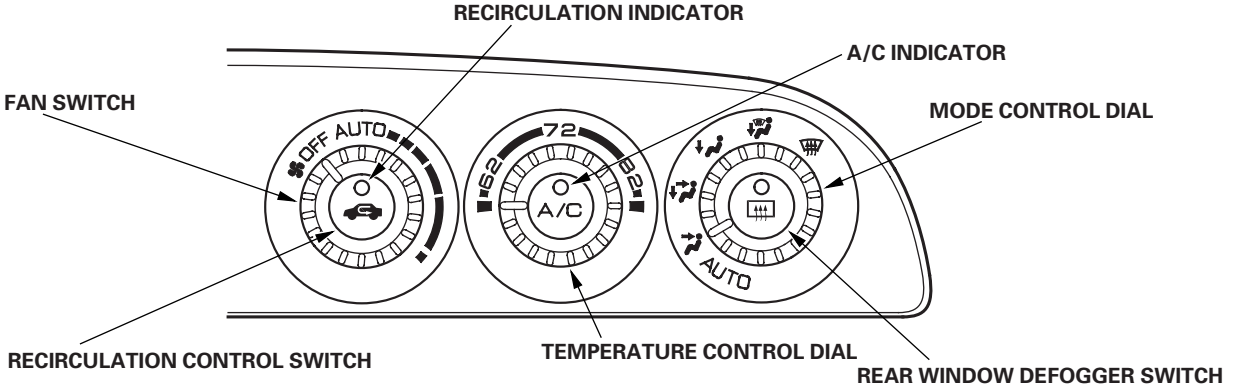

Example of DTC indication Pattern (DTC 3)

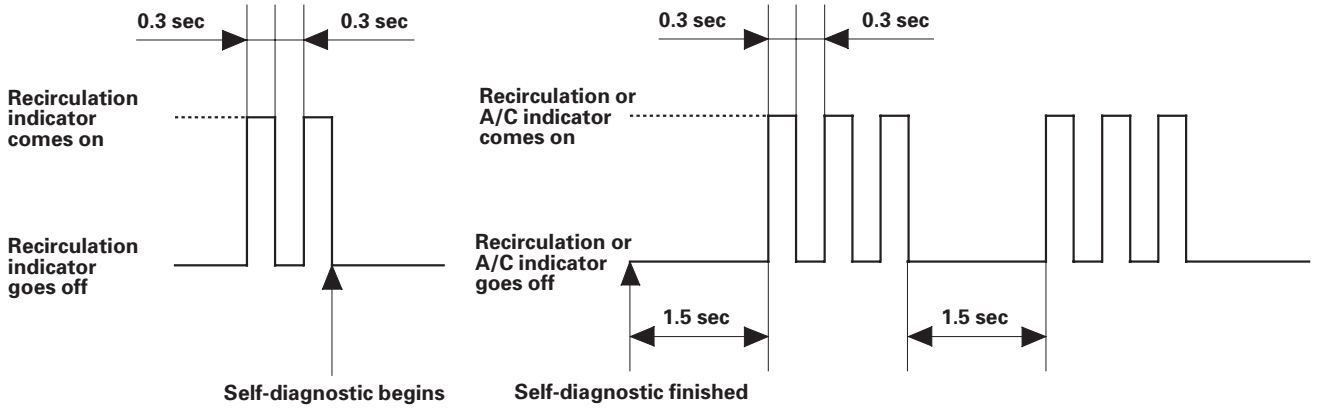

Canceling the Self-diagnostic Function

4. Turn the ignition switch OFF to cancel the self-diagnostic function. After completing repair work, run the self-diagnostic function again to make sure that there are no other malfunctions.

DTC Troubleshooting Index

DTC (Recirculation Indication Blinks)	Detection Item	Page
1	An open in the in-car temperature sensor circuit	(see page 21-16)
2	A short in the in-car temperature sensor circuit	(see page 21-17)
3	An open in the outside air temperature sensor circuit	(see page 21-17)
4	A short in the outside air temperature sensor circuit	(see page 21-19)
5	An open in the sunlight sensor circuit	(see page 21-19)
6	A short in the sunlight sensor circuit	(see page 21-20)
7	An open in the air mix control motor circuit	(see page 21-21)
8	A short in the air mix control motor circuit	(see page 21-21)
9	A problem in the air mix control linkage, door, or motor	(see page 21-22)
10	An open or short in the mode control motor circuit	(see page 21-23)
11	A problem in the mode control linkage, doors, or motor	(see page 21-24)
12	A problem in the blower motor circuit	(see page 21-25)
13	A problem in the EEPROM in the climate control unit; the control unit must be replaced	(see page 21-48)

DTC (A/C Indication Blinks)	Detection Item	Page
14	An open in the evaporator temperature sensor circuit	(see page 21-28)
15	A short in the evaporator temperature sensor circuit	(see page 21-29)

- In case of multiple problems, the recirculation or A/C indicator lights will indicate only the DTC with the least number of blinks.
- In case of an intermittent failure, the climate control unit will store the DTC until the ignition switch is turned off.

Symptom Troubleshooting Index

Symptom	Diagnostic procedure	Also check for
Recirculation control doors do not change between Fresh and Recirculate	Recirculation control motor circuit troubleshooting (see page 21-30)	• HVAC DTCs (see page 21-8) • Blown fuse No. 14 (10 A) in the under-dash fuse/relay box • Cleanliness and tightness of all connectors
The blower motor does not run immediately even though the engine is fully warmed up	NOTE: The temperature control dial must be set between 58 °F (18 °C) and 86 °F (32 °C) ECT sensor circuit troubleshooting (see page 21-31)	Cleanliness and tightness of all connectors
Blower, heater controls, and A/C do not work	Climate control power and ground circuit troubleshooting (see page 21-32)	• HVAC DTCs (see page 21-8) • Blown fuse No. 14 (10 A) in the under-dash fuse/relay box • Poor ground at G402 • Cleanliness and tightness of all connectors
The A/C condenser fan does not run at all (but the radiator fan runs with the A/C on)	A/C condenser fan circuit troubleshooting (see page 21-33)	• HVAC DTCs (see page 21-8) • Blown fuse No. 1 (30 A) in the under-hood fuse/relay box, and No. 14 (10 A) in the under-dash fuse/relay box • Poor ground at G302 • Cleanliness and tightness of all connectors
Both fans do not run with the A/C on	Radiator and A/C condenser fan common circuit troubleshooting (see page 21-35)	• HVAC DTCs (see page 21-8) • Blown fuse No. 1 (30 A) and No. 4 (20 A) in the under-hood fuse/relay box, and No. 14 (10 A) in the under-dash fuse/relay box • Poor ground at G302 • Cleanliness and tightness of all connectors
The A/C compressor clutch does not engage (but both fans run with the A/C on)	A/C compressor clutch circuit troubleshooting (see page 21-36)	• HVAC DTCs (see page 21-8) • Blown fuse No. 1 (30 A) in the under-hood fuse/relay box, and No. 14 (10 A) in the under-dash fuse/relay box • Cleanliness and tightness of all connectors
A/C system does not come on (both fans and the A/C compressor do not work); heater is OK	A/C pressure switch circuit troubleshooting (see page 21-38)	• HVAC DTCs (see page 21-8) • Cleanliness and tightness of all connectors

System Description

The air conditioning system removes heat from the passenger compartment by circulating refrigerant through the system as shown below.

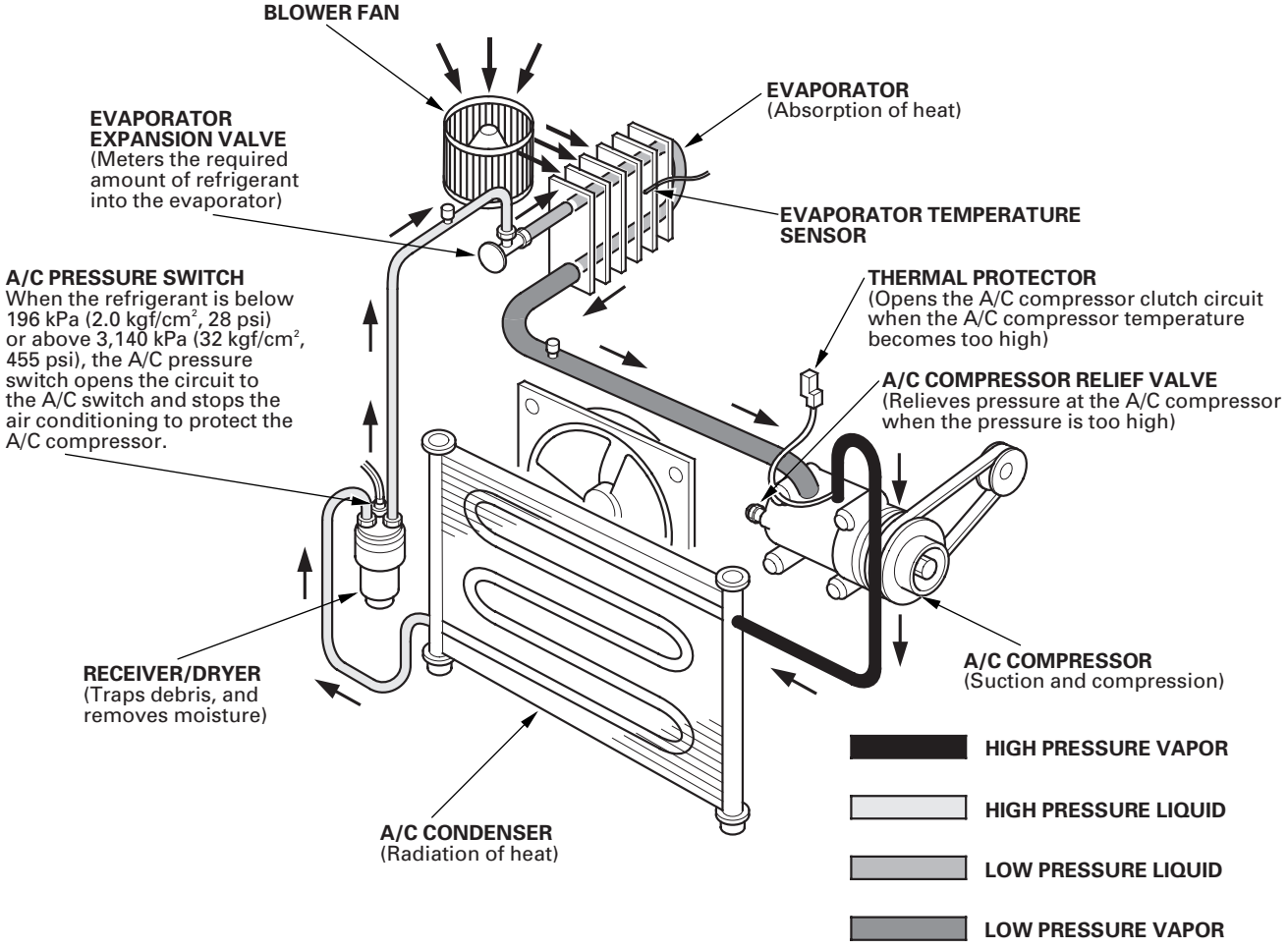

This vehicle uses HFC-134a (R-134a) refrigerant which does not contain chlorofluorocarbons. Pay attention to the following service items:

- Do not mix refrigerants CFC-12 (R-12) and HFC-134a (R-134a). They are not compatible.
- Use only the recommended polyalkyleneglycol (PAG) refrigerant oil (KEIHIN SP-10) designed for the R-134a A/C compressor. Intermixing the recommended (PAG) refrigerant oil with any other refrigerant oil will result in A/C compressor failure.
- All A/C system parts (A/C compressor, discharge line, suction line, evaporator, A/C condenser, receiver/dryer, expansion valve, O-rings for joints) are designed for refrigerant R-134a. Do not exchange with R-12 parts.
- Use a halogen gas leak detector designed for refrigerant R-134a.
- R-12 and R-134a refrigerant servicing equipment are not interchangeable. Use only a recovery/recycling/charging station that is U.L.-listed and is certified to meet the requirements of SAE J2210 to service the R-134a air conditioning systems.
- Always recover the refrigerant R-134a with an approved recovery/recycling/charging station before disconnecting any A/C fitting.

(cont'd)

System Description (cont'd)

Climate Control Unit Inputs and Outputs

CLIMATE CONTROL UNIT 30P CONNECTOR

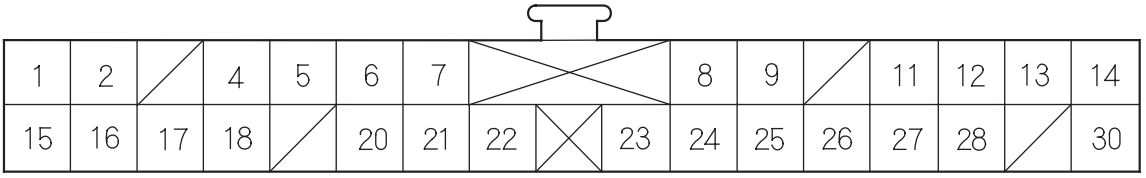

Wire side of female terminals

Cavity	Wire color	Signal	
1	BLK	GROUND (G402)	OUTPUT
2	LT GRN	SENSOR COMMON GROUND	OUTPUT
3	———	———	———
4	GRY	AIR MIX POTENTIAL +5 V	OUTPUT
5	BRN	EVAPORATOR TEMPERATURE SENSOR	INPUT
6	ORN	SUNLIGHT SENSOR	INPUT
7	PNK	OUTSIDE AIR TEMPERATURE SENSOR	INPUT
8	LT BLU	IN-CAR TEMPERATURE SENSOR	INPUT
9	PNK/BLK	AIR MIX POTENTIAL	INPUT
10	———	———	———
11	YEL/GRN	MODE 5	INPUT
12	WHT/BLU	MODE 3, 6	INPUT
13	RED/BLU	MODE 2	INPUT
14	RED/YEL	MODE 1, 4	INPUT
15	BLK/YEL	IG2 (Power)	INPUT
16	BLU/RED	BLOWER FEEDBACK	INPUT
17	BLU/YEL	POWER TRANSISTOR CONTROL	OUTPUT
18	RED/WHT	ENGINE COOLANT TEMPERATURE (ECT) SENSOR	OUTPUT
19	———	———	———
20	GRN	AIR MIX COOL	OUTPUT
21	PNK/BLU	AIR MIX HOT	OUTPUT
22	YEL/RED	MODE DEF	OUTPUT
23	YEL/BLU	MODE VENT	OUTPUT
24	BLU	A/C PRESSURE SWITCH	OUTPUT
25	GRN/WHT	FRESH	OUTPUT
26	GRN/YEL	RECIRCULATE	OUTPUT
27	YEL/BLK	REAR WINDOW DEFOGGER RELAY	OUTPUT
28	RED	DASH LIGHTS BRIGHTNESS CONTROLLER (In the gauge assembly)	OUTPUT
29	———	———	———
30	RED/BLK	No.2 (15 A) [No.2 (10 A)] FUSE (In the under-hood fuse/relay box)	INPUT

[ ] : '05-06 models

Circuit Diagram

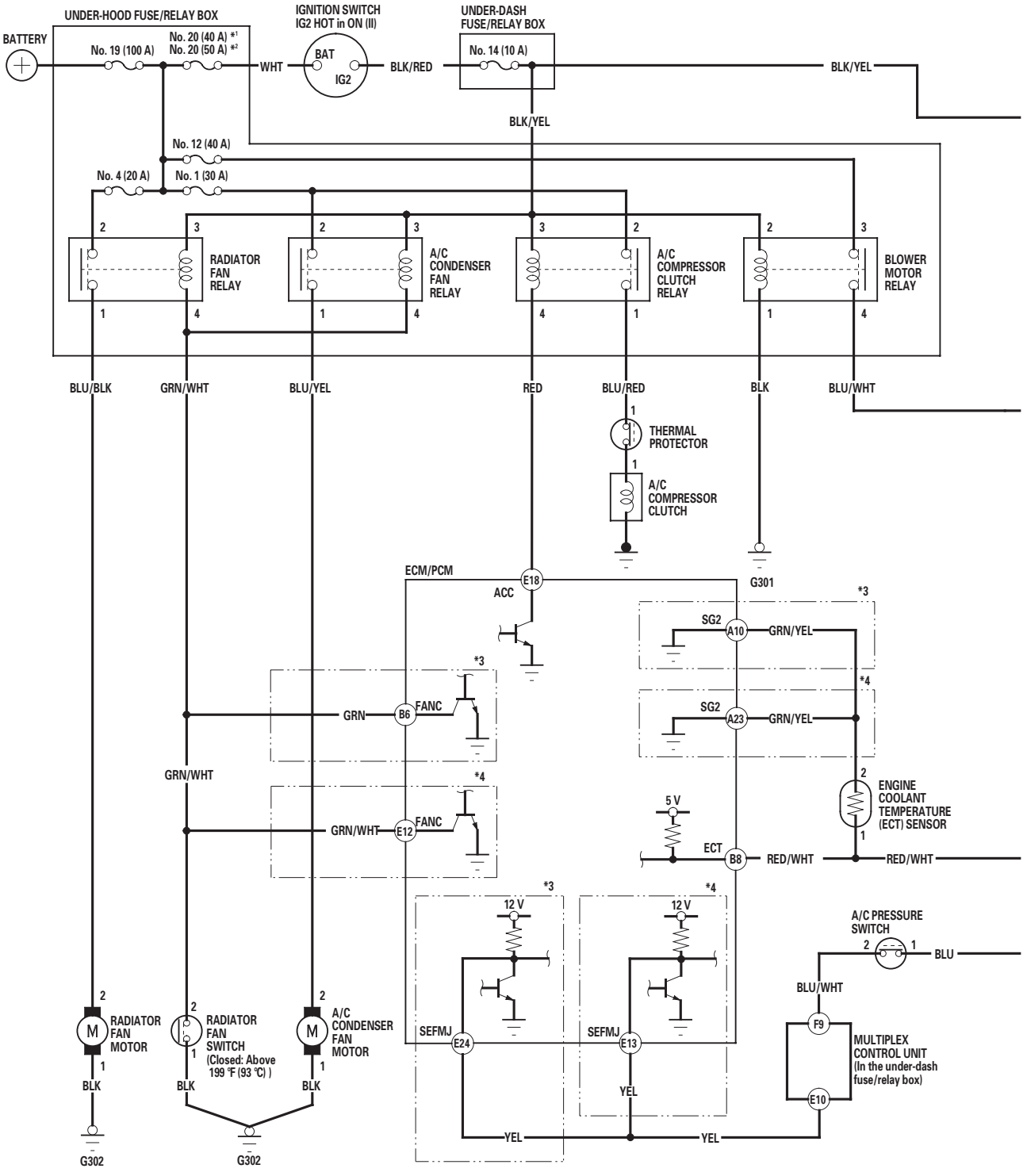

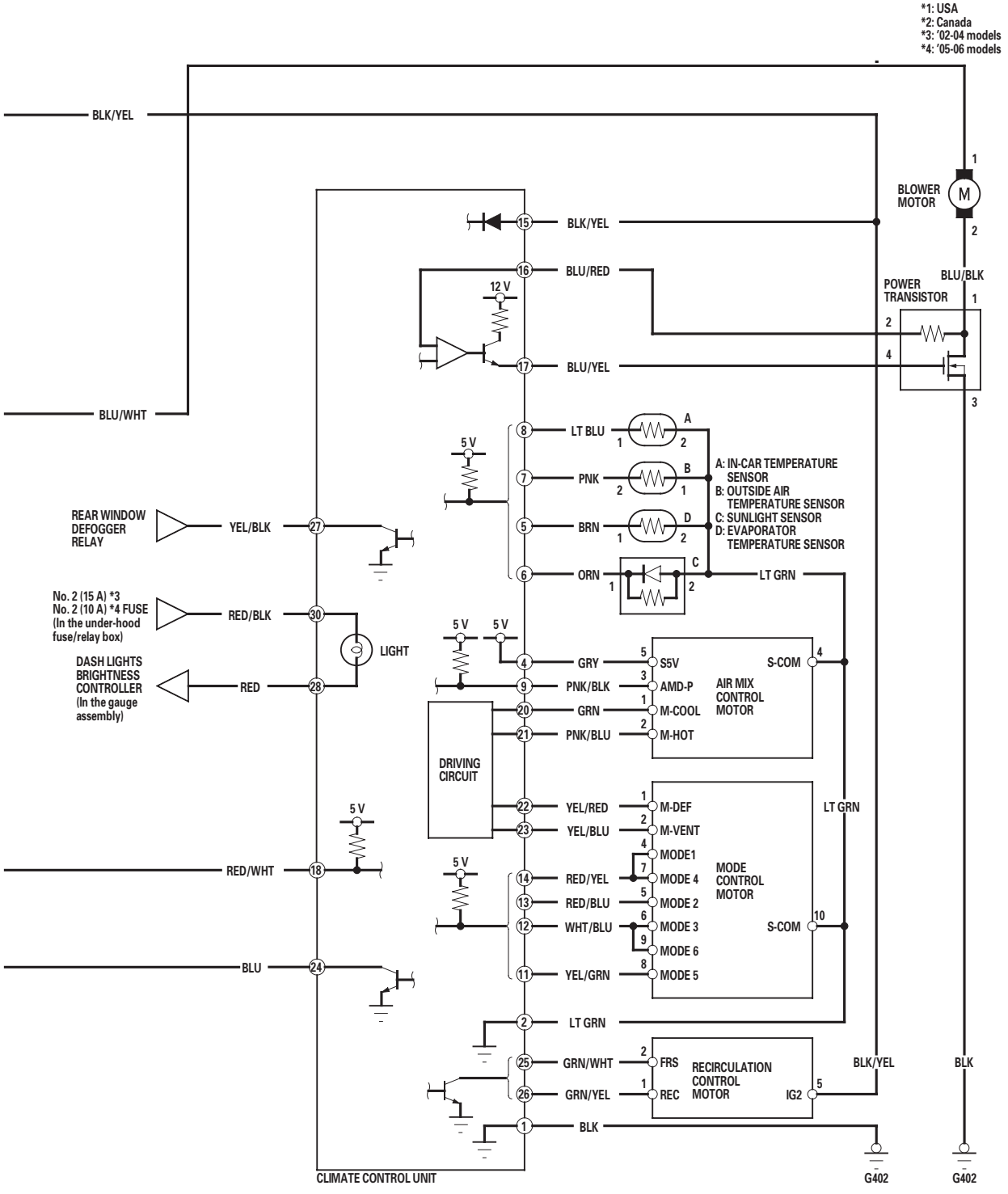
*1: USA
*2: Canada
*3: '02-04 models
*4: '05-06 models
BLK/YEL
BLU/WHT
BLOWER MOTOR
M
BLU/BLK
POWER TRANSISTOR
BLK/YEL
BLU/RED
12 V
BLU/YEL
LT BLU
PNK
BRN
ORN
5 V
A: IN-CAR TEMPERATURE SENSOR
B: OUTSIDE AIR TEMPERATURE SENSOR
C: SUNLIGHT SENSOR
D: EVAPORATOR TEMPERATURE SENSOR
LT GRN
REAR WINDOW DEFOGGER RELAY
YEL/BLK
No. 2 (15 A) *3
No. 2 (10 A) *4 FUSE
(In the under-hood fuse/relay box)
RED/BLK
LIGHT
DASH LIGHTS BRIGHTNESS CONTROLLER
(In the gauge assembly)
RED
GRY
PNK/BLK
GRN
PNK/BLU
S5V
AMD-P
M-COOL
M-HOT
S-COM
AIR MIX CONTROL MOTOR
DRIVING CIRCUIT
YEL/RED
YEL/BLU
M-DEF
M-VENT
MODE1
MODE 4
MODE 2
MODE 3
MODE 6
MODE 5
MODE CONTROL MOTOR
RED/WHT
RED/YEL
RED/BLU
WHT/BLU
YEL/GRN
BLU
GRN/WHT
GRN/YEL
FRS
REC
IG2
RECIRCULATION CONTROL MOTOR
BLK
CLIMATE CONTROL UNIT
G402

DTC Troubleshooting

DTC 1: An Open in the In-car Temperature Sensor Circuit

1. Remove the in-car temperature sensor (see page 21-41).

2. Measure the resistance between the No. 1 and No. 2 terminals of the in-car temperature sensor.
   * Check for a change in resistance by heating or cooling the sensor with a hair dryer.

IN-CAR TEMPERATURE SENSOR

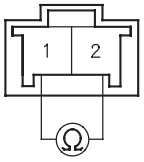

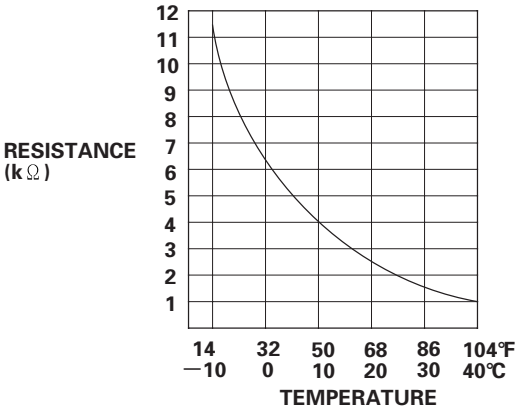

** Is the resistance within the specifications shown on the graph?*

YES—Go to step 3.

NO—Replace the in-car temperature sensor. ■

3. Disconnect the climate control unit 30P connector.

4. Check for continuity between the No. 8 terminal of the climate control unit 30P connector and the No. 1 terminal of the in-car temperature sensor 2P connector.

CLIMATE CONTROL UNIT 30P CONNECTOR
Wire side of female terminals

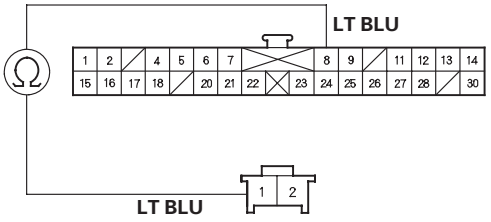

IN-CAR TEMPERATURE SENSOR 2P CONNECTOR
Wire side of female terminals

Is there continuity?

YES—Go to step 5.

NO—Repair open in the wire between the climate control unit and the in-car temperature sensor. ■

5. Check for continuity between the No. 2 terminal of the climate control unit 30P connector and the No. 2 terminal of the in-car temperature sensor 2P connector.

CLIMATE CONTROL UNIT 30P CONNECTOR
Wire side of female terminals

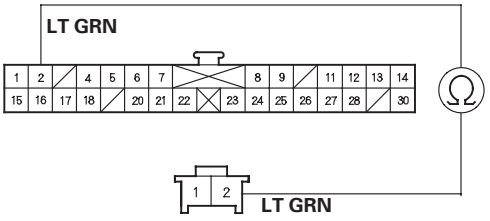

IN-CAR TEMPERATURE SENSOR 2P CONNECTOR
Wire side of female terminals

Is there continuity?

YES—Check for loose wires or poor connections at the climate control unit 30P connector and at the in-car temperature sensor 2P connector. If the connections are good, substitute a known-good climate control unit, and recheck. If the symptom/indication goes away, replace the original climate control unit. ■

NO—Repair open in the wire between the climate control unit and the in-car temperature sensor. ■

DTC 2: A Short in the In-car Temperature Sensor Circuit

1. Remove the in-car temperature sensor (see page 21-41).

2. Test the in-car temperature sensor (see page 21-41).

   Is the in-car temperature sensor OK?

   YES—Go to step 3.

   NO—Replace the in-car temperature sensor. ■

3. Disconnect the climate control unit 30P connector.

4. Check for continuity between the No. 8 terminal of the climate control unit 30P connector and body ground.

CLIMATE CONTROL UNIT 30P CONNECTOR

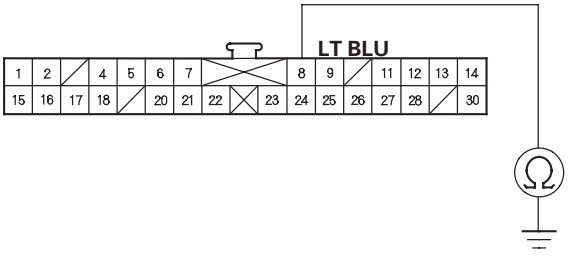

Wire side of female terminals

Is there continuity?

YES—Repair short to body ground in the wire between the climate control unit and the in-car temperature sensor. ■

NO—Substitute a known-good climate control unit, and recheck. If the symptom/indication goes away, replace the original climate control unit. ■

DTC 3: An Open in the Outside Air Temperature Sensor Circuit

1. Remove the outside air temperature sensor (see page 21-42).

2. Measure the resistance between the No. 1 and No. 2 terminals of the outside air temperature sensor.
   * Dip the sensor in ice water, and measure resistance. Then pour warm water on the sensor, and check for a change in resistance.

OUTSIDE AIR TEMPERATURE SENSOR

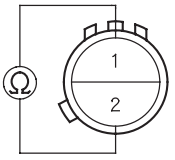

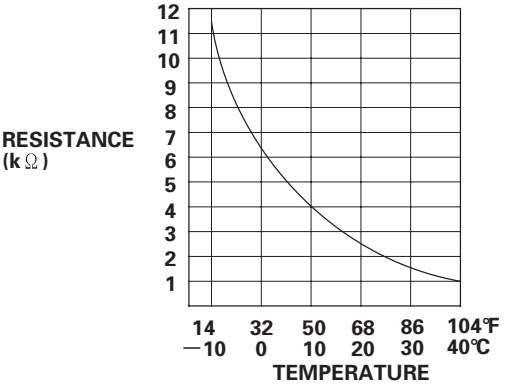

** Is the resistance within the specifications shown on the graph?*

YES—Go to step 3.

NO—Replace the outside air temperature sensor. ■

3. Disconnect the climate control unit 30P connector.

(cont'd)

DTC Troubleshooting (cont'd)

4. Check for continuity between the No. 7 terminal of the climate control unit 30P connector and the No. 2 terminal of the outside air temperature sensor 2P connector.

CLIMATE CONTROL UNIT 30P CONNECTOR
Wire side of female terminals

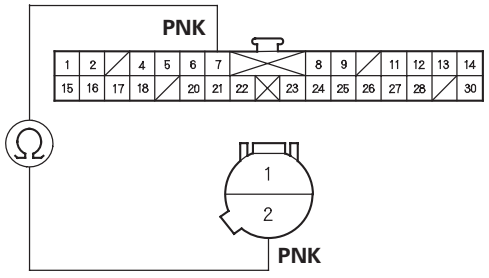

OUTSIDE AIR TEMPERATURE SENSOR 2P CONNECTOR
Wire side of female terminals

Is there continuity?

YES—Go to step 5.

NO—Repair open in the wire between the climate control unit and the outside air temperature sensor. ■

5. Check for continuity between the No. 2 terminal of the climate control unit 30P connector and the No. 1 terminal of the outside air temperature sensor 2P connector.

CLIMATE CONTROL UNIT 30P CONNECTOR
Wire side of female terminals

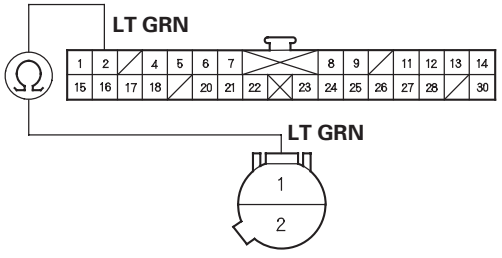

OUTSIDE AIR TEMPERATURE SENSOR 2P CONNECTOR
Wire side of female terminals

Is there continuity?

YES—Check for loose wires or poor connections at the climate control unit 30P connector and at the outside air temperature sensor 2P connector. If the connections are good, substitute a known-good climate control unit, and recheck. If the symptom/indication goes away, replace the original climate control unit. ■

NO—Repair open in the wire between the climate control unit and the outside air temperature sensor. ■

DTC 4: A Short in the Outside Air Temperature Sensor Circuit

1. Remove the outside air temperature sensor (see page 21-42).

2. Test the outside air temperature sensor (see page 21-42).

   Is the outside air temperature sensor OK?

   YES—Go to step 3.

   NO—Replace the outside air temperature sensor. ■

3. Disconnect the climate control unit 30P connector.

4. Check for continuity between the No. 7 terminal of the climate control unit 30P connector and body ground.

CLIMATE CONTROL UNIT 30P CONNECTOR

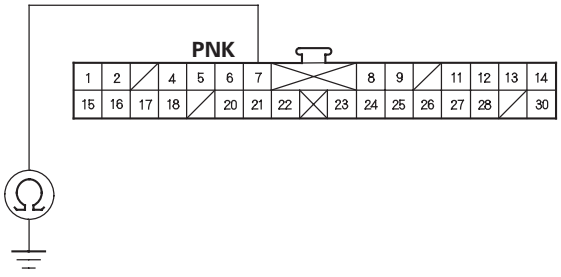

Wire side of female terminals

Is there continuity?

YES—Repair short to body ground in the wire between the climate control unit and the outside air temperature sensor. ■

NO—Substitute a known-good climate control unit, and recheck. If the symptom/indication goes away, replace the original climate control unit. ■

DTC 5: An Open in the Sunlight Sensor Circuit

1. Disconnect the sunlight sensor 2P connector.

2. Disconnect the climate control unit 30P connector.

3. Check for continuity between the No. 6 terminal of the climate control unit 30P connector and the No. 1 terminal of the sunlight sensor 2P connector.

CLIMATE CONTROL UNIT 30P CONNECTOR
Wire side of female terminals

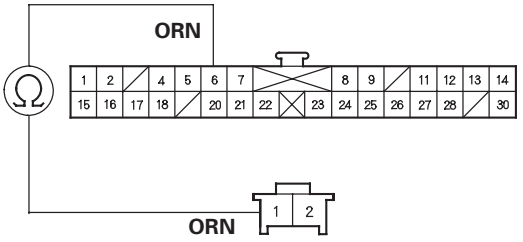

SUNLIGHT SENSOR 2P CONNECTOR
Wire side of female terminals

Is there continuity?

YES—Go to step 4.

NO—Repair open in the wire between the climate control unit and the sunlight sensor. ■

(cont'd)

DTC Troubleshooting (cont'd)

4. Check for continuity between the No. 2 terminal of the climate control unit 30P connector and the No. 2 terminal of the sunlight sensor 2P connector.

CLIMATE CONTROL UNIT 30P CONNECTOR
Wire side of female terminals

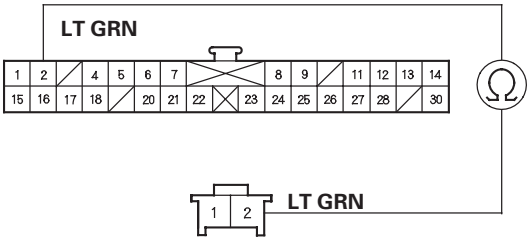

SUNLIGHT SENSOR 2P CONNECTOR
Wire side of female terminals

Is there continuity?

YES—Go to step 5.

NO—Repair open in the wire between the climate control unit and the sunlight sensor. ■

5. Reconnect the sunlight sensor 2P connector.

6. Reconnect the climate control unit 30P connector.

7. Test the sunlight sensor (see page 21-43).

Is the sunlight sensor OK?

YES—Check for loose wires or poor connections at the climate control unit 30P connector and at the sunlight sensor 2P connector. If the connections are good, substitute a known-good climate control unit, and recheck. If the symptom/indication goes away, replace the original climate control unit. ■

NO—Replace the sunlight sensor. ■

DTC 6: A Short in the Sunlight Sensor Circuit

1. Disconnect the sunlight sensor 2P connector.

2. Disconnect the climate control unit 30P connector.

3. Check for continuity between the No. 6 terminal of the climate control unit 30P connector and body ground.

CLIMATE CONTROL UNIT 30P CONNECTOR

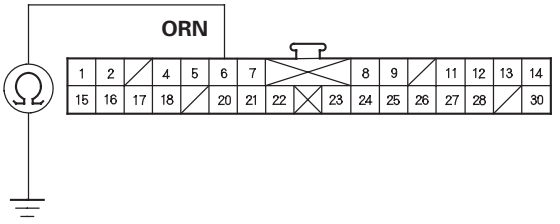

Wire side of female terminals

Is there continuity?

YES—Repair short to body ground in the wire between the climate control unit and the sunlight sensor. ■

NO—Go to step 4.

4. Reconnect the sunlight sensor 2P connector.

5. Reconnect the climate control unit 30P connector.

6. Test the sunlight sensor (see page 21-43).

Is the sunlight sensor OK?

YES—Substitute a known-good climate control unit, and recheck. If the symptom/indication goes away, replace the original climate control unit. ■

NO—Replace the sunlight sensor. ■

DTC 7: An Open in the Air Mix Control Motor Circuit

1. Disconnect the air mix control motor 5P connector.

2. Disconnect the climate control unit 30P connector.

3. Check for continuity between the following terminals of the climate control unit 30P connector and the air mix control motor 5P connector.

30P:	5P:
No. 2	No. 4
No. 4	No. 5
No. 9	No. 3
No. 20	No. 1
No. 21	No. 2

CLIMATE CONTROL UNIT 30P CONNECTOR
Wire side of female terminals

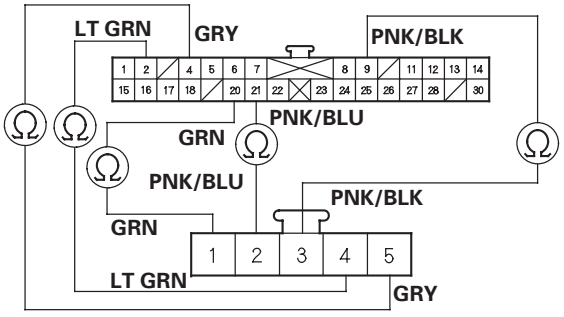

AIR MIX CONTROL MOTOR 5P CONNECTOR
Wire side of female terminals

Is there continuity?

YES—Check for loose wires or poor connections at the climate control unit 30P connector and at the air mix control motor 5P connector. If the connections are good, substitute a known-good air mix control motor, and recheck. If the symptom/indication goes away, replace the original air mix control motor. If the symptom/indication continues, substitute a known-good climate control unit, and recheck. If the symptom/indication goes away, replace the original climate control unit.■

NO—Repair any open in the wire(s) between the climate control unit and the air mix control motor.■

DTC 8: A Short in the Air Mix Control Motor Circuit

1. Disconnect the air mix control motor 5P connector.

2. Disconnect the climate control unit 30P connector.

3. Check for continuity between body ground and the climate control unit 30P connector terminals No. 2, 4, 9, 20, and 21 individually.

CLIMATE CONTROL UNIT 30P CONNECTOR

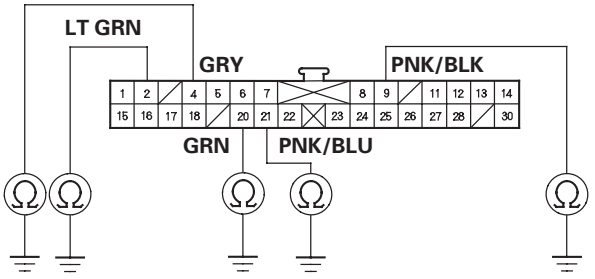

Wire side of female terminals

Is there continuity?

YES—Repair any short to body ground in the wire(s) between the climate control unit and the air mix control motor.■

NO—Go to step 4.

(cont'd)

DTC Troubleshooting (cont'd)

4. Turn the ignition switch ON (II), and check the same terminals for voltage.

CLIMATE CONTROL UNIT 30P CONNECTOR

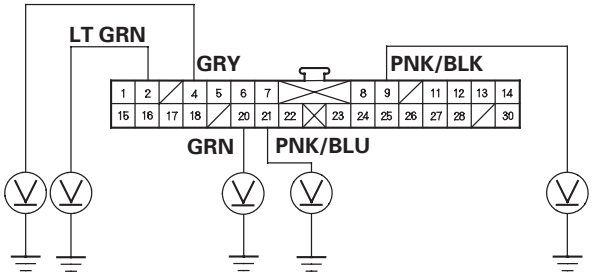

Wire side of female terminals

Is there any voltage?

YES—Repair any short to power in the wire(s) between the climate control unit and the air mix control motor. This short may also damage the climate control unit. Repair the short to power before replacing the climate control unit. ■

NO—Substitute a known-good air mix control motor, and recheck. If the symptom/indication goes away, replace the original air mix control motor. If the symptom/indication continues, substitute a known-good climate control unit, and recheck. If the symptom/indication goes away, replace the original heater control panel. ■

DTC 9: A Problem in the Air Mix Control Linkage, Door, or Motor

1. Test the air mix control motor (see page 21-45).

   Is the air mix control motor OK?

   YES—Substitute a known-good climate control unit, and recheck. If the symptom/indication goes away, replace the original climate control unit. ■

   NO—Go to step 2.

2. Remove the air mix control motor (see page 21-45).

3. Check the air mix control linkage and door for smooth movement.

   Do the air mix control linkage and door move smoothly?

   YES—Replace the air mix control motor. ■

   NO—Repair the air mix control linkage or door. ■

DTC 10: An Open or Short in the Mode Control Motor Circuit

1. Disconnect the mode control motor 10P connector.

2. Disconnect the climate control unit 30P connector.

3. Check for continuity between the following terminals of the climate control unit 30P connector and the mode control motor 10P connector.

30P:	10P:
No. 2	No. 10
No. 11	No. 8
No. 12	No. 6, 9
No. 13	No. 5
No. 14	No. 4, 7
No. 22	No. 1
No. 23	No. 2

CLIMATE CONTROL UNIT 30P CONNECTOR
Wire side of female terminals

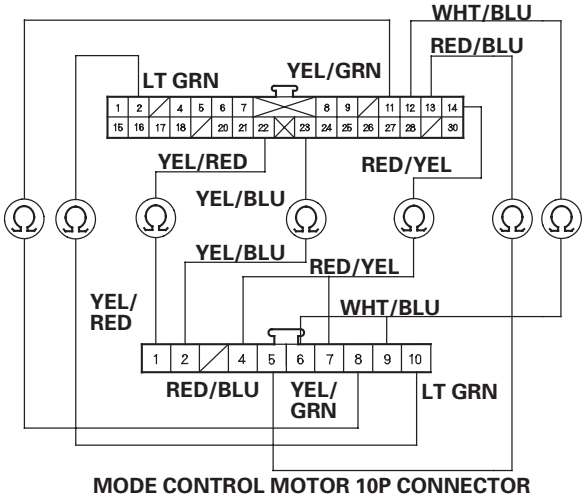

MODE CONTROL MOTOR 10P CONNECTOR
Wire side of female terminals

Is there continuity?

YES—Go to step 4.

NO—Repair any open in the wire(s) between the climate control unit and the mode control motor. ■

4. Check for continuity between body ground and the climate control unit 30P connector terminals No. 2, 11, 12, 13, 14, 22, and 23 individually.

CLIMATE CONTROL UNIT 30P CONNECTOR

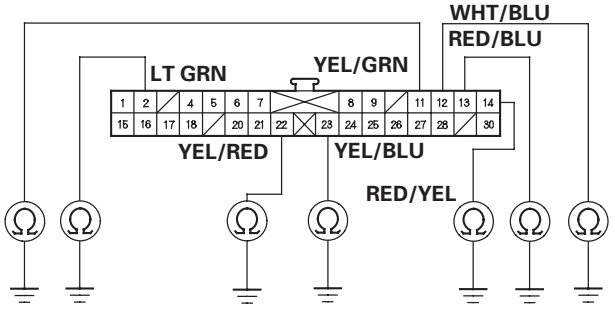

Wire side of female terminals

Is there continuity?

YES—Repair any short to body ground in the wire(s) between the climate control unit and the mode control motor. ■

NO—Go to step 5.

(cont'd)

DTC Troubleshooting (cont'd)

5. Turn the ignition switch ON (II), and check the same terminals for voltage.

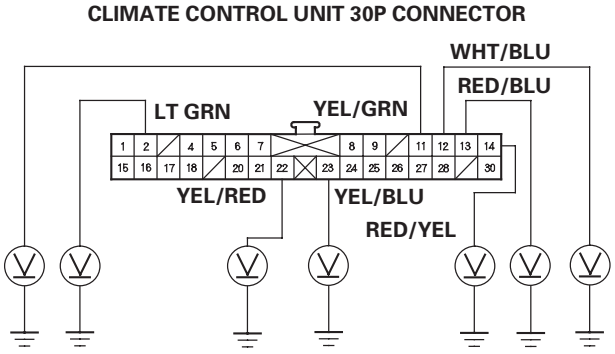

Wire side of female terminals

Is there any voltage?

YES—Repair any short to power in the wire(s) between the climate control unit and the mode control motor. This short may also damage the climate control unit. Repair the short to power before replacing the climate control unit. ■

NO—Check for loose wires or poor connections at the climate control unit 30P connector and at the mode control motor 10P connector. If the connections are good, substitute a known-good mode control motor, and recheck. If the symptom/indication goes away, replace the original mode control motor. If the symptom/indication continues, substitute a known-good climate control unit, and recheck. If the symptom/indication goes away, replace the original climate control unit. ■

DTC 11: A Problem in the Mode Control Linkage, Doors, or Motor

1. Test the mode control motor (see page 21-46).

   Is the mode control motor OK?

   YES—Substitute a known-good climate control unit, and recheck. If the symptom/indication goes away, replace the original climate control unit. ■

   NO—Go to step 2.

2. Remove the mode control motor (see page 21-46).

3. Check the mode control linkage and doors for smooth movement.

   Do the mode control linkage and doors move smoothly?

   YES—Replace the mode control motor. ■

   NO—Repair the mode control linkage or doors. ■

DTC 12: A Problem in the Blower Motor Circuit

1. Check the No. 12 (40 A) fuse in the under-hood fuse/relay box, and the No. 14 (10 A) fuse in the under-dash fuse/relay box.

   Are the fuses OK?

   YES—Go to step 2.

   NO—Replace the fuse(s), and recheck. ■

2. Connect the No. 2 terminal of the blower motor 2P connector to body ground with a jumper wire.

BLOWER MOTOR 2P CONNECTOR

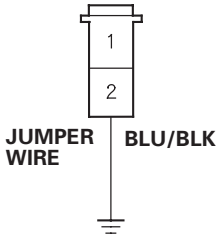

Wire side of female terminals

3. Turn the ignition switch ON (II).

   Does the blower motor run?

   YES—Go to step 4.

   NO—Go to step 17.

4. Turn the ignition switch OFF.

5. Disconnect the jumper wire.

6. Disconnect the power transistor 4P connector.

7. Check for continuity between the No. 3 terminal of the power transistor 4P connector and body ground.

POWER TRANSISTOR 4P CONNECTOR

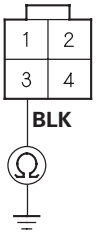

Wire side of female terminals

   Is there continuity?

   YES—Go to step 8.

   NO—Check for an open in the wire between the power transistor and body ground. If the wire is OK, check for poor ground at G402. ■

8. Connect the No. 1 and No. 3 terminals of the power transistor 4P connector with a jumper wire.

POWER TRANSISTOR 4P CONNECTOR

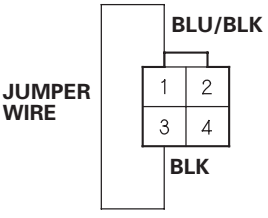

Wire side of female terminals

9. Turn the ignition switch ON (II).

   Does the blower motor run at high speed?

   YES—Go to step 10.

   NO—Repair open in the wire between the power transistor and the blower motor. ■

10. Turn the ignition switch OFF.

11. Disconnect the jumper wire.

(cont'd)

DTC Troubleshooting (cont'd)

12. Disconnect the climate control unit 30P connector.

13. Check for continuity between the No. 16 and No. 17 terminals of the climate control unit 30P connector and body ground individually.

CLIMATE CONTROL UNIT 30P CONNECTOR

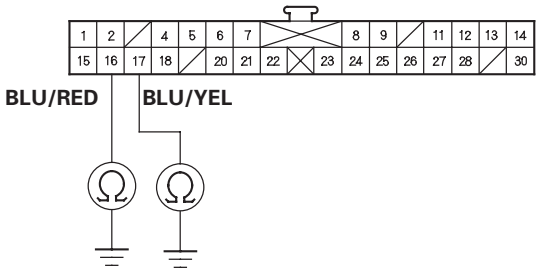

Wire side of female terminals

Is there continuity?

YES—Repair any short to body ground in the wire(s) between the climate control unit and the power transistor. ■

NO—Go to step 14.

14. Check for continuity between the following terminals of the climate control unit 30P connector and power transistor 4P connector.

30P:	4P:
No. 16	No. 2
No. 17	No. 4

CLIMATE CONTROL UNIT 30P CONNECTOR
Wire side of female terminals

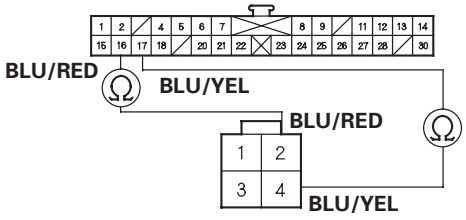

POWER TRANSISTOR 4P CONNECTOR
Wire side of female terminals

Is there continuity?

YES—Go to step 15.

NO—Repair any open in the wire(s) between the climate control unit and the power transistor. ■

15. Reconnect the climate control unit 30P connector.

16. Test the power transistor (see page 21-48).

Is the power transistor OK?

YES—Check for loose wires or poor connections at the climate control unit 30P connector and at the power transistor 4P connector. If the connections are good, substitute a known-good climate control unit, and recheck. If the symptom/indication goes away, replace the original climate control unit. ■

NO—Replace the power transistor. ■

17. Disconnect the jumper wire.

18. Disconnect the blower motor 2P connector.

19. Measure the voltage between the No. 1 terminal of the blower motor 2P connector and body ground.

BLOWER MOTOR 2P CONNECTOR

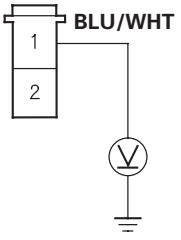

Wire side of female terminals

Is there battery voltage?

YES—Replace the blower motor. ■

NO—Go to step 20.

20. Turn the ignition switch OFF.

21. Remove the blower motor relay from the under-hood fuse/relay box, and test it (see page 22-62).

Is the relay OK?

YES—Go to step 22.

NO—Replace the blower motor relay. ■

22. Measure the voltage between the No. 3 terminal of the blower motor relay 4P socket and body ground.

BLOWER MOTOR RELAY 4P SOCKET

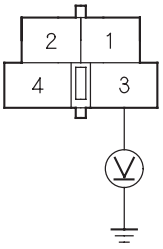

Is there battery voltage?

YES—Go to step 23.

NO—Replace the under-hood fuse/relay box. ■

23. Turn the ignition switch ON (II).

24. Measure the voltage between the No. 2 terminal of the blower motor relay 4P socket and body ground.

BLOWER MOTOR RELAY 4P SOCKET

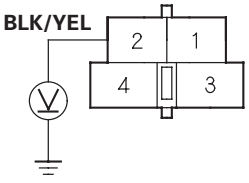

Is there battery voltage?

YES—Go to step 25.

NO—Repair open in the BLK/YEL wire between the No. 14 (10 A) fuse in the under-dash fuse/relay box and the blower motor relay. ■

25. Turn the ignition switch OFF.

26. Check for continuity between the No. 1 terminal of the blower motor relay 4P socket and body ground.

BLOWER MOTOR RELAY 4P SOCKET

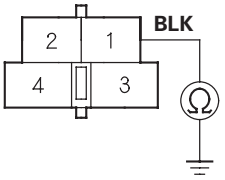

Is there continuity?

YES—Repair open in the BLU/WHT wire between the blower motor relay and the blower motor. ■

NO—Check for an open in the wire between the blower motor relay and body ground. If the wire is OK, check for poor ground at G301. ■

DTC Troubleshooting (cont'd)

DTC 14: An Open in the Evaporator Temperature Sensor Circuit

1. Remove the evaporator temperature sensor (see page 21-44).

2. Measure the resistance between the No. 1 and No. 2 terminals of the evaporator temperature sensor.
   * Dip the sensor in ice water, and measure resistance. Then pour warm water on the sensor, and check for a change in resistance.

EVAPORATOR TEMPERATURE SENSOR

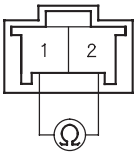

Terminal side of male terminals

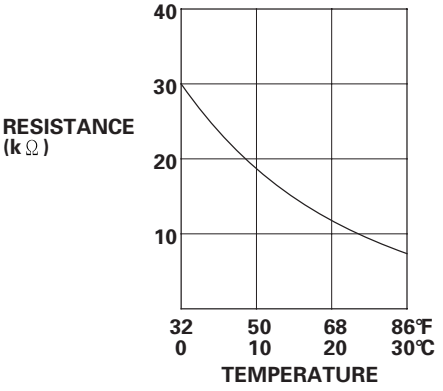

** Is the resistance within the specifications shown on the graph?*

YES—Go to step 3.

NO—Replace the evaporator temperature sensor. ■

3. Disconnect the climate control unit 30P connector.

4. Check for continuity between the No. 5 terminal of the climate control unit 30P connector and the No. 1 terminal of the evaporator temperature sensor 2P connector.

CLIMATE CONTROL UNIT 30P CONNECTOR
Wire side of female terminals

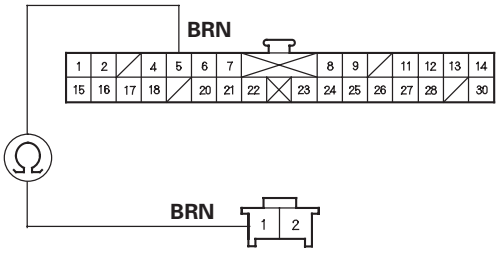

EVAPORATOR TEMPERATURE SENSOR 2P CONNECTOR
Wire side of female terminals

Is there continuity?

YES—Go to step 5.

NO—Repair open in the wire between the climate control unit and the evaporator temperature sensor. ■

5. Check for continuity between the No. 2 terminal of the climate control unit 30P connector and the No. 2 terminal of the evaporator temperature sensor 2P connector.

CLIMATE CONTROL UNIT 30P CONNECTOR
Wire side of female terminals

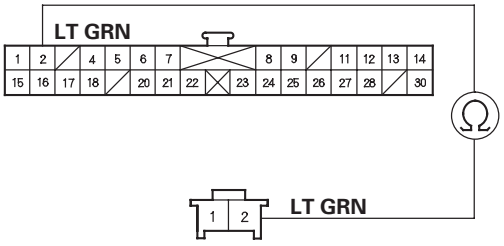

EVAPORATOR TEMPERATURE SENSOR 2P CONNECTOR
Wire side of female terminals

Is there continuity?

YES—Check for loose wires or poor connections at the climate control unit 30P connector and at the evaporator temperature sensor 2P connector. If the connections are good, substitute a known-good climate control unit, and recheck. If the symptom/indication goes away, replace the original climate control unit. ■

NO—Repair open in the wire between the climate control unit and the evaporator temperature sensor. ■

DTC 15: A Short in the Evaporator Temperature Sensor Circuit

1. Remove the evaporator temperature sensor (see page 21-44).

2. Test the evaporator temperature sensor (see page 21-44).

   Is the evaporator temperature sensor OK?

   YES—Go to step 3.

   NO—Replace the evaporator temperature sensor. ■

3. Disconnect the climate control unit 30P connector.

4. Check for continuity between the No. 5 terminal of the climate control unit 30P connector and body ground.

CLIMATE CONTROL UNIT 30P CONNECTOR

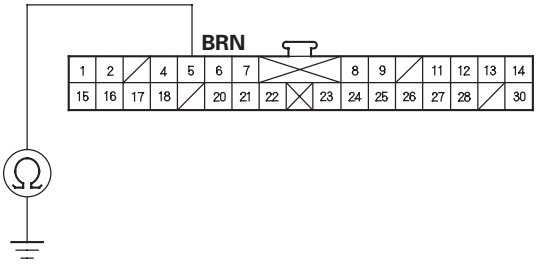

Wire side of female terminals

Is there continuity?

YES—Repair short to body ground in the wire between the climate control unit and the evaporator temperature sensor. ■

NO—Substitute a known-good climate control unit, and recheck. If the symptom/indication goes away, replace the original climate control unit. ■

Recirculation Control Motor Circuit Troubleshooting

1. Check the No. 14 (10 A) fuse in the under-dash fuse/relay box.

   Is the fuse OK?

   YES—Go to step 2.

   NO—Replace the fuse, and recheck.■

2. Disconnect the recirculation control motor 5P connector.

3. Turn the ignition switch ON (II).

4. Measure the voltage between the No. 5 terminal of the recirculation control motor 5P connector and body ground.

RECIRCULATION CONTROL MOTOR 5P CONNECTOR

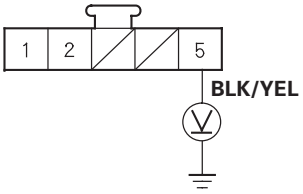

Wire side of female terminals

Is there battery voltage?

YES—Go to step 5.

NO—Repair open in the wire between the No. 14 (10 A) fuse in the under-dash fuse/relay box and the recirculation control motor .■

5. Turn the ignition switch OFF.

6. Test the recirculation control motor (see page 21-47).

   Is the recirculation control motor OK?

   YES—Go to step 7.

   NO—Go to step 12.

7. Disconnect the climate control unit 30P connector.

8. Check for continuity between the No. 25 and No. 26 terminals of the climate control unit 30P connector and body ground individually.

CLIMATE CONTROL UNIT 30P CONNECTOR

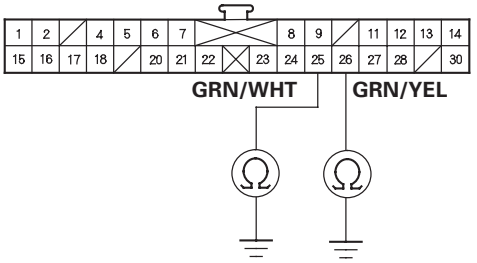

Wire side of female terminals

Is there continuity?

YES—Repair any short to body ground in the wire(s) between the climate control unit and the recirculation control motor.■

NO—Go to step 9.

9. Turn the ignition switch ON (II), and check the same wires for voltage.

CLIMATE CONTROL UNIT 30P CONNECTOR

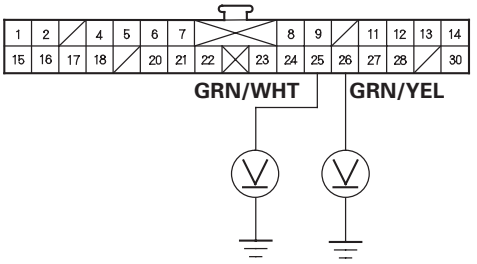

Wire side of female terminals

Is there any voltage?

YES—Repair any short to power in the wire(s) between the climate control unit and the recirculation control motor. This short may also damage the climate control unit. Repair the short to power before replacing the climate control unit.■

NO—Go to step 10.

10. Turn the ignition switch OFF.

11. Check for continuity between the following terminals of the climate control unit 30P connector and the recirculation control motor 5P connector.

30P:	5P:
No. 25	No. 2
No. 26	No. 1

CLIMATE CONTROL UNIT 30P CONNECTOR
Wire side of female terminals

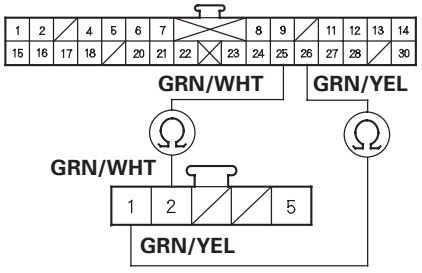

RECIRCULATION CONTROL MOTOR 5P CONNECTOR
Wire side of female terminals

Is there continuity?

YES—Check for loose wires or poor connections at the climate control unit 30P connector and at recirculation control motor 5P connector. If the connections are good, substitute a known-good climate control unit, and recheck. If the symptom/indication goes away, replace the original climate control unit. ■

NO—Repair any open in the wire(s) between the climate control unit and the recirculation control motor. ■

12. Remove the recirculation control motor (see page 21-47).

13. Check the recirculation control linkage and doors for smooth movement.

Do the recirculation control linkage and doors move smoothly?

YES—Replace the recirculation control motor. ■

NO—Repair the recirculation control linkage or doors. ■

1. Check the malfunction indicator lamp (MIL).

Does the malfunction indicator lamp come on?

YES—Refer to the powertrain DTCs (see page 11-3). ■

NO—Go to step 2.

2. Turn the ignition switch OFF.

3. Disconnect the ECT sensor 2P connector.

4. Disconnect the climate control unit 30P connector.

5. Turn the ignition switch ON (II).

6. Measure the voltage between the No. 18 terminal of the climate control unit 30P connector and body ground.

CLIMATE CONTROL UNIT 30P CONNECTOR

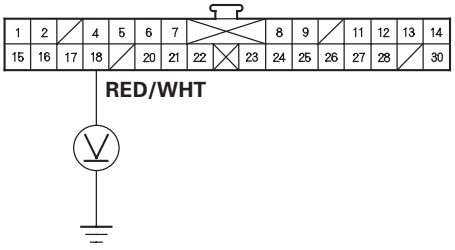

Wire side of female terminals

Is there about 5 V?

YES—Check for loose wires or poor connections at the climate control unit 30P connector and at the ECT sensor 2P connector. If the connections are good, substitute a known-good climate control unit, and recheck. If the symptom/indication goes away, replace the original climate control unit. ■

NO—Repair open in the wire between the climate control unit and the ECT sensor. ■

Climate Control Power and Ground Circuit Troubleshooting

1. Check the No. 14 (10 A) fuse in the under-dash fuse/relay box.

   Is the fuse OK?

   YES—Go to step 2.

   NO—Replace the fuse, and recheck. ■

2. Disconnect the climate control unit 30P connector.

3. Turn the ignition switch ON (II).

4. Measure the voltage between the No. 15 terminal of the climate control unit 30P connector and body ground.

CLIMATE CONTROL UNIT 30P CONNECTOR

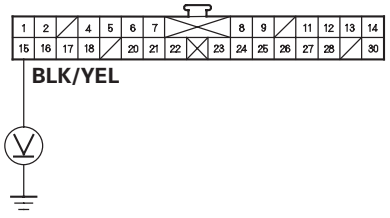

Wire side of female terminals

   Is there battery voltage?

   YES—Go to step 5.

   NO—Repair open in the wire between the No. 14 fuse in the under-dash fuse/relay box and the climate control unit. ■

5. Turn the ignition switch OFF.

6. Check for continuity between the No. 1 terminal of the climate control unit 30P connector and body ground.

CLIMATE CONTROL UNIT 30P CONNECTOR

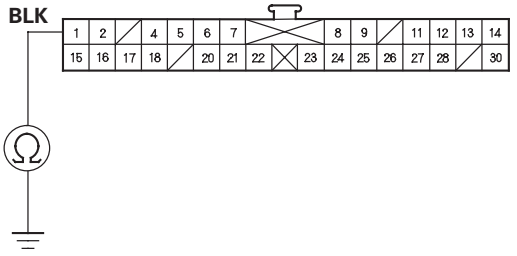

Wire side of female terminals

   Is there continuity?

   YES—Check for loose wires or poor connections at the climate control unit 30P connector. If the connections are good, substitute a known-good climate control unit, and recheck. If the symptom/indication goes away, replace the original climate control unit. ■

   NO—Check for an open in the wire between the climate control unit and body ground. If the wire is OK, check for poor ground at G402. ■

A/C Condenser Fan Circuit Troubleshooting

NOTE:
- Do not use this troubleshooting procedure if the radiator fan and/or the A/C compressor is inoperative. Refer to the symptom troubleshooting index.
- Before performing symptom troubleshooting, check for powertrain DTCs (see page 11-3).

1. Check the No. 1 (30 A) fuse in the under-hood fuse/relay box, and the No. 14 (10 A) fuse in the under-dash fuse/relay box.

   Are the fuses OK?

   YES—Go to step 2.

   NO—Replace the fuse(s), and recheck. ■

2. Remove the A/C condenser fan relay from the under-hood fuse/relay box, and test it (see page 22-62).

   Is the relay OK?

   YES—Go to step 3.

   NO—Replace the A/C condenser fan relay. ■

3. Measure the voltage between the No. 2 terminal of the A/C condenser fan relay 4P socket and body ground.

A/C CONDENSER FAN RELAY 4P SOCKET

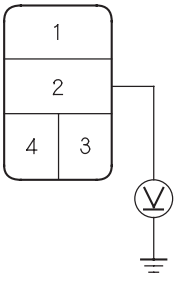

   Is there battery voltage?

   YES—Go to step 4.

   NO—Replace the under-hood fuse/relay box. ■

4. Connect the No. 1 and No. 2 terminals of the A/C condenser fan relay 4P socket with a jumper wire.

A/C CONDENSER FAN RELAY 4P SOCKET

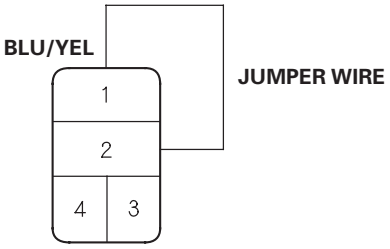

   Does the A/C condenser fan run?

   YES—Go to step 5.

   NO—Go to step 8.

5. Disconnect the jumper wire.

6. Turn the ignition switch ON (II).

7. Measure the voltage between the No. 3 terminal of the A/C condenser fan relay 4P socket and body ground.

A/C CONDENSER FAN RELAY 4P SOCKET

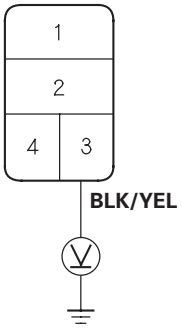

   Is there battery voltage?

   YES—Replace the under-hood fuse/relay box. ■

   NO—Repair open in the BLK/YEL wire between the No. 14 (10 A) fuse in the under-dash fuse/relay box and the A/C condenser fan relay. ■

8. Disconnect the jumper wire.

(cont'd)

A/C Condenser Fan Circuit Troubleshooting (cont'd)

9. Disconnect the A/C condenser fan 2P connector.

10. Check for continuity between the No. 1 terminal of the A/C condenser fan relay 4P socket and the No. 2 terminal of the A/C condenser fan 2P connector.

A/C CONDENSER FAN RELAY 4P SOCKET

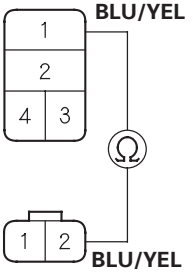

A/C CONDENSER FAN 2P CONNECTOR
Wire side of female terminals

Is there continuity?

YES—Go to step 11.

NO—Repair open in the wire between the A/C condenser fan relay and the A/C condenser fan. ■

11. Check for continuity between the No. 1 terminal of the A/C condenser fan 2P connector and body ground.

A/C CONDENSER FAN 2P CONNECTOR

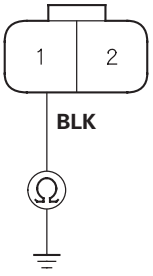

Wire side of female terminals

Is there continuity?

YES—Replace the A/C condenser fan motor. ■

NO—Check for an open in the wire between the A/C condenser fan and body ground. If the wire is OK, check for poor ground at G302. ■

Radiator and A/C Condenser Fan Common Circuit Troubleshooting

NOTE:
- Do not use this troubleshooting procedure if only one fan is inoperative, or if the A/C compressor is inoperative. Refer to the symptom troubleshooting index.
- Before performing symptom troubleshooting, check for powertrain DTCs (see page 11-3).

1. Check the No. 1 (30 A) and No. 4 (20 A) fuses in the under-hood fuse/relay box, and the No. 14 (10 A) fuse in the under-dash fuse/relay box.

   Are the fuses OK?

   YES—Go to step 2.

   NO—Replace the fuse(s), and recheck. ■

2. Remove the A/C condenser fan relay from the under-hood fuse/relay box.

3. Turn the ignition switch ON (II).

4. Measure the voltage between the No. 3 terminal of the A/C condenser fan relay 4P socket and body ground.

A/C CONDENSER FAN RELAY 4P SOCKET

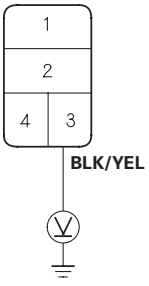

   Is there battery voltage?

   YES—Go to step 5.

   NO—Repair open in the BLK/YEL wire between the No. 14 (10 A) fuse in the under-dash fuse/relay box and the radiator fan relay, and the A/C condenser fan relay. ■

5. Turn the ignition switch OFF.

6. Reinstall the A/C condenser fan relay.

7. Make sure the A/C switch is OFF.

8. Turn the ignition switch ON (II).

9. '02-04 models: Using a backprobe set, measure the voltage between the No. 6 terminal of ECM/PCM connector B (24P) and body ground with the ECM/PCM connectors connected.
   '05-06 models: Using a backprobe set, measure the voltage between the No. 12 terminal of ECM/PCM connector E (31P) and body ground with the ECM/PCM connectors connected.

   '02-04 models

ECM/PCM CONNECTOR B (24P)

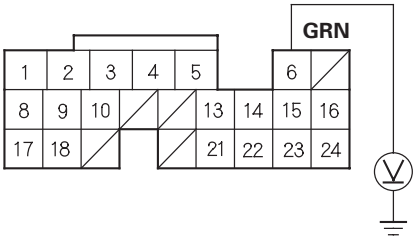

Wire side of female terminals

   '05-06 models

ECM/PCM CONNECTOR E (31P)

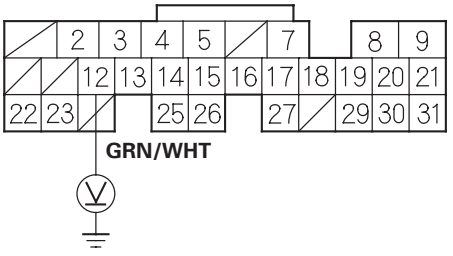

Wire side of female terminals

   Is there battery voltage?

   YES—Update the ECM/PCM if it does not have the latest software, or substitute a known-good ECM/PCM, then recheck (see page 11-6). If the symptom/indication goes away with a known-good ECM/PCM, replace the original ECM/PCM. ■

   NO—Repair open in the wire between the radiator fan relay, the A/C condenser fan relay and the ECM/PCM. ■

A/C Compressor Clutch Circuit Troubleshooting

NOTE:
- Do not use this troubleshooting procedure if the fans are also inoperative. Refer to the symptom troubleshooting index.
- Before performing symptom troubleshooting, check for powertrain DTCs (see page 11-3).

1. Check the No. 1 (30 A) fuse in the under-hood fuse/relay box, and the No. 14 (10 A) fuse in the under-dash fuse/relay box.

   Are the fuses OK?

   YES—Go to step 2.

   NO—Replace the fuse(s), and recheck. ■

2. Check the engine coolant temperature, the throttle position sensor, and the idle speed (use the HDS PGM-FI data list if possible).

ECT Sensor	169—194 °F (76—90 °C)
TP Sensor	About 0.5 V
RPM	K20A02, K20Z1 engine: 700
	K20A03 engine: 650

   Are the engine coolant temperature, throttle position and idle speed OK?

   YES—Go to step 3.

   NO—Troubleshoot and repair the cause of the high engine coolant temperature, low idle, or excessively high throttle position sensor reading.

3. Remove the A/C compressor clutch relay from the under-hood fuse/relay box, and test it (see page 22-62).

   Is the relay OK?

   YES—Go to step 4.

   NO—Replace the A/C compressor clutch relay. ■

4. Measure the voltage between the No. 2 terminal of the A/C compressor clutch relay 4P socket and body ground.

A/C COMPRESSOR CLUTCH RELAY 4P SOCKET

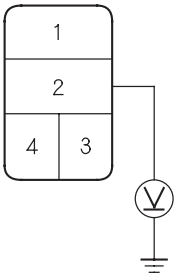

   Is there battery voltage?

   YES—Go to step 5.

   NO—Replace the under-hood fuse/relay box. ■

5. Connect the No. 1 and No. 2 terminals of the A/C compressor clutch relay 4P socket with a jumper wire.

A/C COMPRESSOR CLUTCH RELAY 4P SOCKET

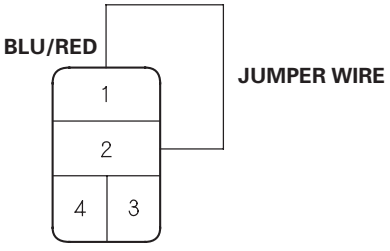

   Does the A/C compressor clutch click?

   YES—Go to step 6.

   NO—Go to step 14.

6. Disconnect the jumper wire.

7. Turn the ignition switch ON (II).

8. Measure the voltage between the No. 3 terminal of the A/C compressor clutch relay 4P socket and body ground.

A/C COMPRESSOR CLUTCH RELAY 4P SOCKET

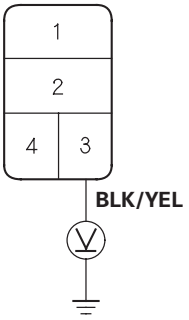

Is there battery voltage?

YES—Go to step 9.

NO—Repair open in the BLK/YEL wire between the No. 14 (10 A) fuse in the under-dash fuse/relay box and the A/C compressor clutch relay. ■

9. Turn the ignition switch OFF.

10. Reinstall the A/C compressor clutch relay.

11. Make sure the A/C switch is OFF.

12. Turn the ignition switch ON (II).

13. Using a backprobe set, measure the voltage between the No. 18 terminal of ECM/PCM connector E (31P) and body ground with the ECM/PCM connectors connected.

'02-04 models

ECM/PCM CONNECTOR E (31P)

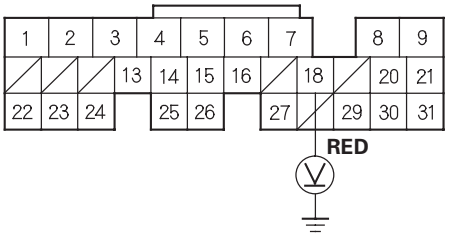

Wire side of female terminals

'05-06 models

ECM/PCM CONNECTOR E (31P)

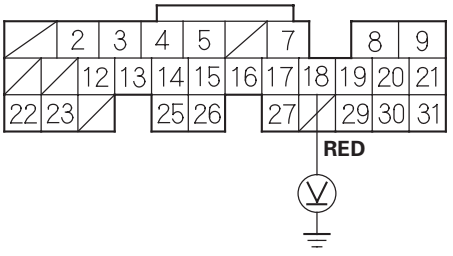

Wire side of female terminals

Is there battery voltage?

YES—Update the ECM/PCM if it does not have the latest software, or substitute a known-good ECM/PCM, then recheck (see page 11-6). If the symptom/indication goes away with a known-good ECM/PCM, replace the original ECM/PCM. ■

NO—Repair open in the wire between the A/C compressor clutch relay and the ECM/PCM. ■

14. Disconnect the jumper wire.

15. Disconnect the A/C compressor clutch 1P connector.

(cont'd)

A/C Compressor Clutch Circuit Troubleshooting (cont'd)

16. Check for continuity between the No. 1 terminal of the A/C compressor clutch relay 4P socket and the No. 1 terminal of the A/C compressor clutch 1P connector.

A/C COMPRESSOR CLUTCH RELAY 4P SOCKET

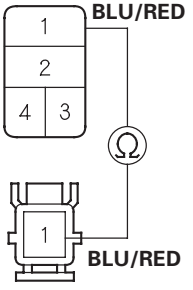

A/C COMPRESSOR CLUTCH 1P CONNECTOR
Terminal side of male terminals

Is there continuity?

YES—Check the A/C compressor clutch clearance, the thermal protector, and the A/C compressor clutch field coil (see page 21-57). ■

NO—Repair open in the wire between the A/C compressor clutch relay and the A/C compressor clutch. ■

A/C Pressure Switch Circuit Troubleshooting

NOTE:
- Do not use this troubleshooting procedure if the following items are operative: A/C condenser fan, radiator fan, A/C compressor, or if the heater is inoperative. Refer to the symptom troubleshooting index.
- Before performing symptom troubleshooting, check for powertrain DTCs (see page 11-3).

1. Disconnect the A/C pressure switch 2P connector.

2. Turn the ignition switch ON (II).

3. Measure the voltage between the No. 2 terminal of the A/C pressure switch 2P connector and body ground.

A/C PRESSURE SWITCH 2P CONNECTOR

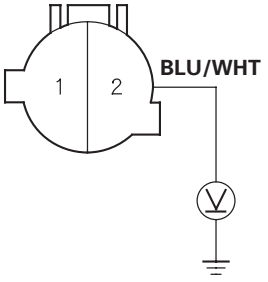

Wire side of female terminals

Is there battery voltage?

YES—Go to step 4.

NO—Go to step 12.

4. Turn the ignition switch OFF.

5. Check for continuity between the No. 1 and No. 2 terminals of the A/C pressure switch.

A/C PRESSURE SWITCH

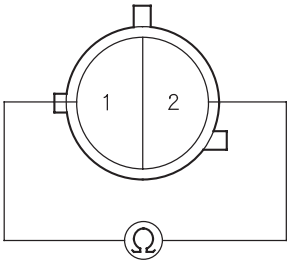

Is there continuity?

YES—Go to step 6.

NO—Go to step 14.

6. Reconnect the A/C pressure switch 2P connector.

7. Disconnect the climate control unit 30P connector.

8. Turn the ignition switch ON (II).

9. Measure the voltage between the No. 24 terminal of the climate control unit 30P connector and body ground.

CLIMATE CONTROL UNIT 30P CONNECTOR

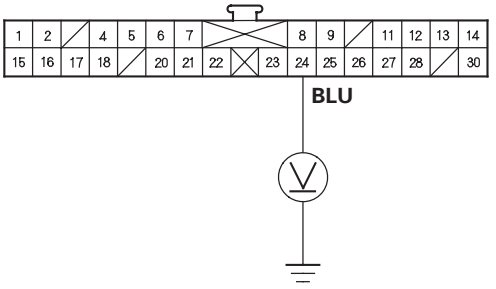

Wire side of female terminals

Is there battery voltage?

YES—Go to step 10.

NO—Repair open in the wire between the climate control unit and the A/C pressure switch. ■

10. Turn the ignition switch OFF.

(cont'd)

A/C Pressure Switch Circuit Troubleshooting (cont'd)

11. Measure the resistance between the No. 2 and No. 5 terminals of the climate control unit 30P connector.

CLIMATE CONTROL UNIT 30P CONNECTOR

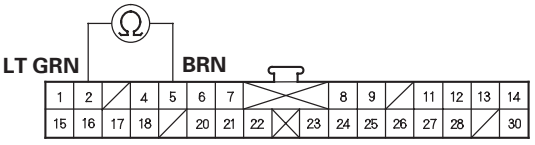

Wire side of female terminals

Is the resistance less than 24 kΩ ?

YES—Check for loose wires or poor connections at the climate control unit 30P connector and at the A/C pressure switch 2P connector. If the connections are good, substitute a known-good climate control unit, and recheck. If the symptom/indication goes away, replace the original climate control unit. ■

NO—Repair cause of high resistance in the evaporator temperature circuit. ■

12. Make sure the A/C switch is OFF.

13. Measure the voltage between the No. 9 terminal of under-dash fuse/relay box connector F (12P) and body ground with the under-dash fuse/relay box connectors connected.

UNDER-DASH FUSE/RELAY BOX CONNECTOR F (12P)

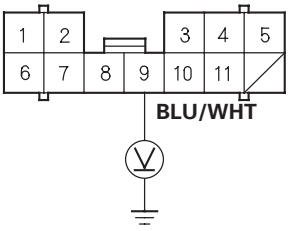

Wire side of female terminals

Is there battery voltage?

YES—Repair open in the wire between the under-dash fuse/relay box and the A/C pressure switch. ■

NO—Refer to the multiplex control system troubleshooting (see page 22-189). ■

14. Check for proper A/C system pressure (see page 21-66).

Is the pressure within specifications?

YES—Replace the A/C pressure switch. ■

NO—Repair the A/C pressure problem. ■

In-car Temperature Sensor Test

Check for a change in resistance by heating or cooling the sensor with a hair dryer.

Compare the resistance reading between the No. 1 and No. 2 terminals of the in-car temperature sensor with the specifications shown in the graph; the resistance should be within the specifications.

IN-CAR TEMPERATURE SENSOR

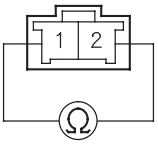

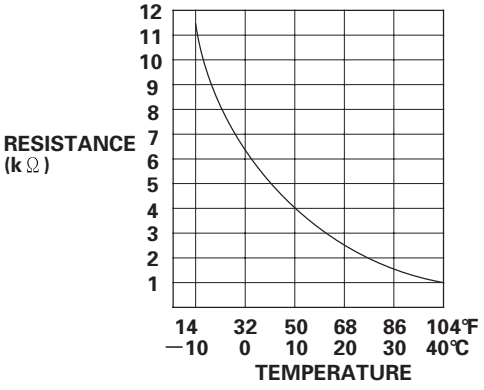

In-car Temperature Sensor Replacement

1. Remove the in-car temperature sensor (A) from the dashboard, then disconnect the 2P connector (B) and the air hose (C). Be careful not to damage the sensor or the dashboard.

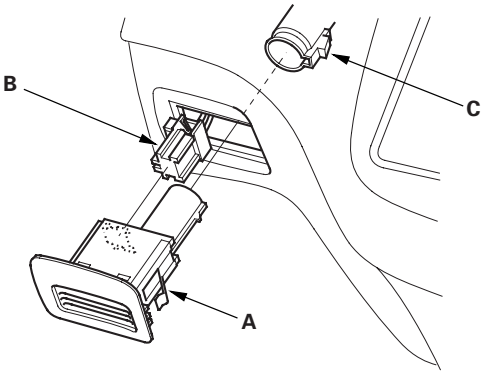

2. Install the sensor in the reverse order of removal. Be sure to connect the air hose securely.

Outside Air Temperature Sensor Test

Dip the sensor in ice water, and measure the resistance. Then pour warm water on the sensor, and check for a change in resistance.

Compare the resistance reading between the No. 1 and No. 2 terminals of the outside air temperature sensor with the specifications shown in the graph; the resistance should be within the specifications.

OUTSIDE AIR TEMPERATURE SENSOR

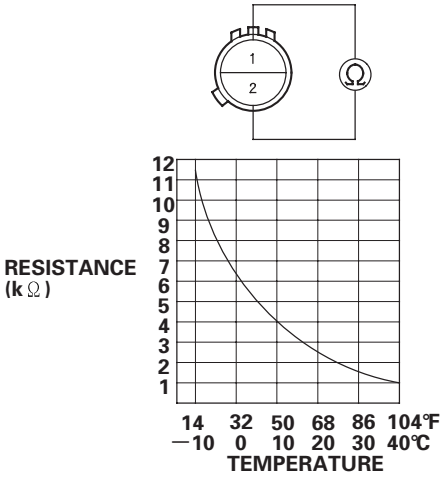

Outside Air Temperature Sensor Replacement

1. Lift the tab (A) to release the lock, and remove the outside air temperature sensor (B), then disconnect the 2P connector (C).

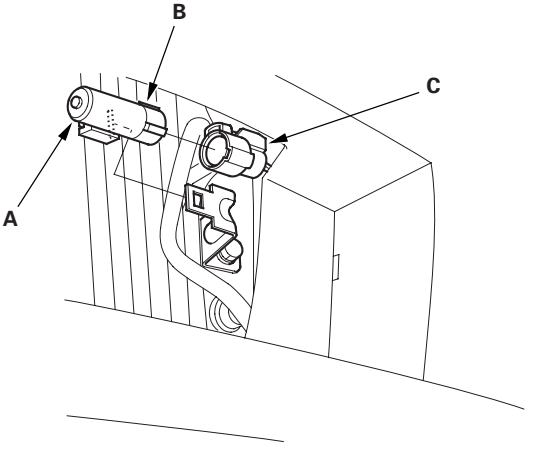

2. Install the sensor in the reverse order of removal.

Sunlight Sensor Test

Turn the ignition switch ON (II). Measure the voltage between the terminals with the (+) probe on the No. 1 terminal and the (−) probe on the No. 2 terminal with the 2P connector connected. The voltage reading will not change under the light of a flashlight or a fluorescent lamp. Voltage should be:

- 3.6—3.7 V or more with the sensor out of direct sunlight.
- 3.3—3.5 V or less with the sensor in direct sunlight.

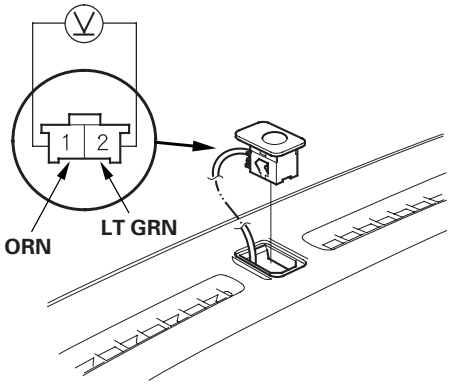

Sunlight Sensor Replacement

1. Remove the sunlight sensor from the dashboard, then disconnect the 2P connector. Be careful not to damage the sensor or the dashboard.

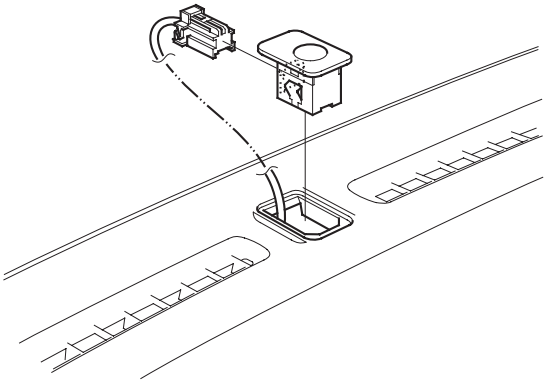

2. Install the sensor in the reverse order of removal.

Evaporator Temperature Sensor Test

1. Dip the sensor in ice water, and measure the resistance between its terminals.

EVAPORATOR TEMPERATURE SENSOR

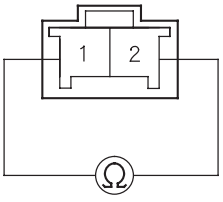

Terminal side of male terminals

2. Then pour warm water on the sensor, and check for a change in resistance.

3. Compare the resistance readings with the specifications shown in the graph; the resistance should be within the specifications.

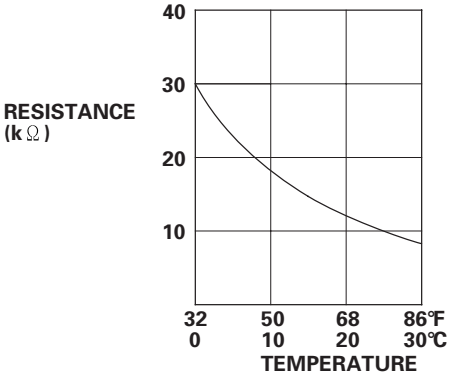

Evaporator Temperature Sensor Replacement

1. Disconnect the 2P connector (A) from the evaporator temperature sensor (B), then remove the connector clip (C) and wire harness clip (D). Remove the self-tapping screw, and carefully pull out the evaporator temperature sensor.

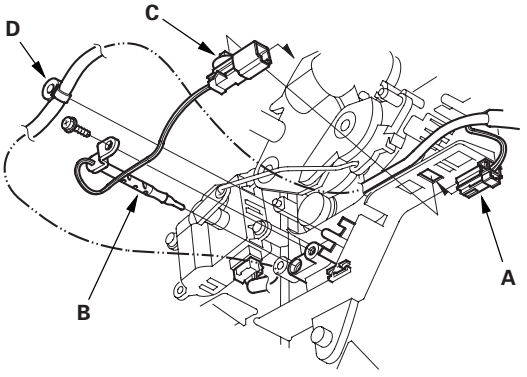

2. Install the sensor in the reverse order of removal.

Air Mix Control Motor Test

1. Disconnect the 5P connector from the air mix control motor.

   NOTICE
   Incorrectly applying power and ground to the air mix control motor will damage it. Follow the instructions carefully.

2. Connect battery power to the No.1 terminal of the air mix control motor, and ground the No. 2 terminal; the air mix control motor should run, and stop at Max Cool. If it doesn't, reverse the connections; the air mix control motor should run, and stop at Max Hot.

3. If the air mix control motor did not run in step 2, remove it, then check the air mix control linkage and door for smooth movement.

   - If the linkage and the door move smoothly, replace the air mix control motor.
   - If the linkage or the door sticks or binds, repair them as needed.
   - If the air mix control motor runs smoothly, go to step 4.

AIR MIX CONTROL MOTOR

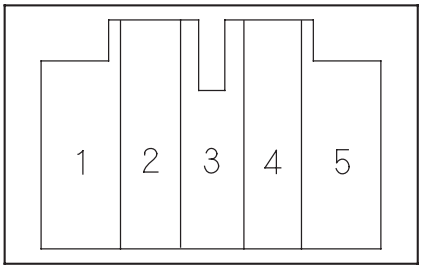

4. Measure the resistance between the No. 4 and No. 5 terminals. It should be between 2.1 to 3.9 kΩ.

5. Reconnect the air mix control motor 5P connector, then turn the ignition switch ON (II).

6. Using the backprobe set, measure the voltage between the No. 3 and No. 4 terminals.

   Max Cool—about 1 V
   Max Hot—about 4 V

7. If either the resistance or voltage readings are not as specified, replace the air mix control motor.

Air Mix Control Motor Replacement

1. Disconnect the 5P connector (A) from the air mix control motor (B). Remove the self-tapping screws and the air mix control motor from the heater unit. Remove the rod (C) from the arm (D) of the air mix control motor.

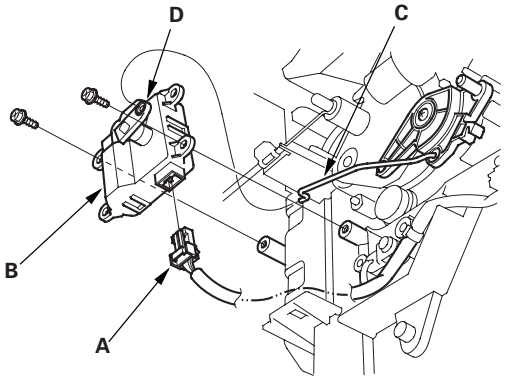

2. Install the motor in the reverse order of removal. After installation, make sure the motor runs smoothly.

Mode Control Motor Test

1. Disconnect the 10P connector from the mode control motor.

   NOTICE
   Incorrectly applying power and ground to the mode control motor will damage it. Follow the instructions carefully.

2. Connect battery power to the No. 1 terminal of the mode control motor, and ground the No. 2 terminal; the mode control motor should run smoothly and stop at Defrost. If it doesn't, reverse the connections; the mode control motor should run smoothly and stop at Vent. When the mode control motor stops running, disconnect battery power immediately.

MODE CONTROL MOTOR

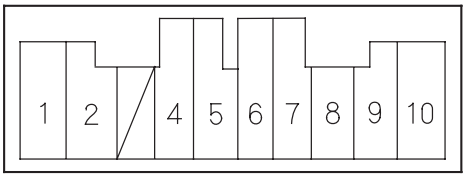

3. If the mode control motor did not run in step 2, remove it, then check the mode control linkage and doors for smooth movement.

   - If the linkage and doors move smoothly, replace the mode control motor.
   - If the linkage or doors stick or bind, repair them as needed.
   - If the mode control motor runs smoothly, go to step 4.

4. Use a digital multimeter with an output of 1 mA or less at the 20 kΩ range. With the mode control motor running as in step 2, check for continuity between the No. 4, 5, 6, 7, 8, and 9 terminals and the No. 10 terminal individually. There should be continuity for a moment at each terminal as the motor moves past the switch's terminal.

5. If there is no continuity for a moment at each terminal, replace the mode control motor.

Mode Control Motor Replacement

1. Open the glove box. Remove the glove box stop on each side, then let the glove box hang down (see page 20-67).

2. Disconnect the 10P connector (A) from the mode control motor (B). Remove the self-tapping screws and the mode control motor from the heater unit.

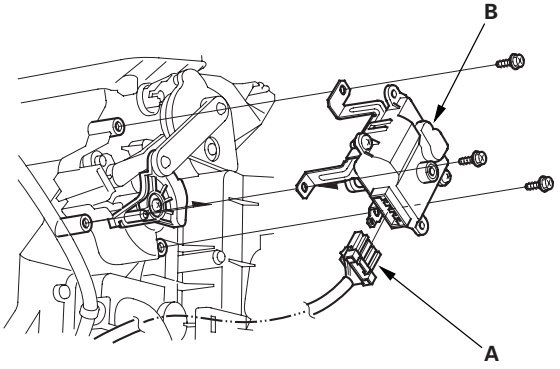

3. Install the motor in the reverse order of removal. Make sure the pin on the linkage is properly engaged with the motor. After installation, make sure the motor runs smoothly.

Recirculation Control Motor Test

1. Disconnect the 5P connector from the recirculation control motor.

   NOTICE
   Incorrectly applying power and ground to the recirculation control motor will damage it. Follow the instructions carefully.

2. Connect battery power to the No. 5 terminal of the recirculation control motor, and ground the No. 1 or No. 2 terminal; the recirculation control motor should run smoothly. To avoid damaging the recirculation control motor, do not reverse power and ground. Disconnect the No. 1 or No. 2 terminal from ground; the recirculation control motor should stop at Fresh (when the No. 1 terminal is disconnected) or Recirculate (when the No. 2 terminal is disconnected). Don't cycle the recirculation control motor for a long time.

RECIRCULATION CONTROL MOTOR

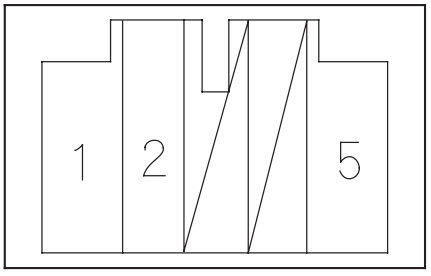

3. If the recirculation control motor did not run in step 2, remove it, then check the recirculation control linkage and doors for smooth movement.

   - If the linkage and doors move smoothly, replace the recirculation control motor.
   - If the linkage or doors stick or bind, repair them as needed.

Recirculation Control Motor Replacement

1. Open the glove box. Remove the glove box stop on each side, then let the glove box hang down (see page 20-67).

2. Disconnect the 5P connector (A) from the recirculation control motor (B). Remove the self-tapping screws and the recirculation control motor from the blower unit.

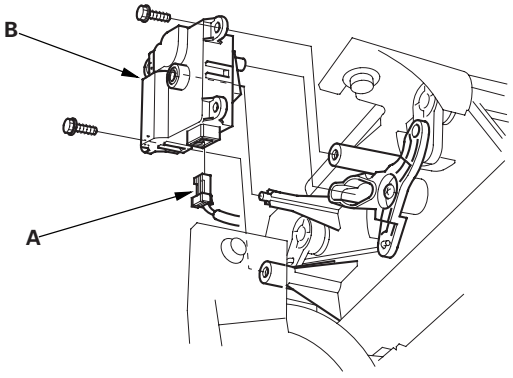

3. Install the motor in the reverse order of removal. Make sure the pin on the motor is properly engaged with the linkage. After installation, make sure the motor runs smoothly.

Power Transistor Test

1. Disconnect the 4P connector from the power transistor.

2. Measure the resistance between the No. 1 and No. 2 terminals of the power transistor. It should be about 1.4—1.5 kΩ.

   - If the resistance is within the specifications, go to step 3.
   - If the resistance is not within the specifications, replace the power transistor.

POWER TRANSISTOR

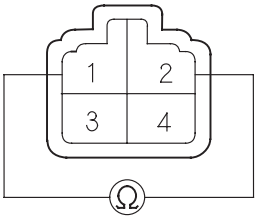

3. Carefully release the lock tab on the No. 4 terminal (BLU/YEL) (A) in the 4P connector, then remove the terminal and insulate it from body ground.

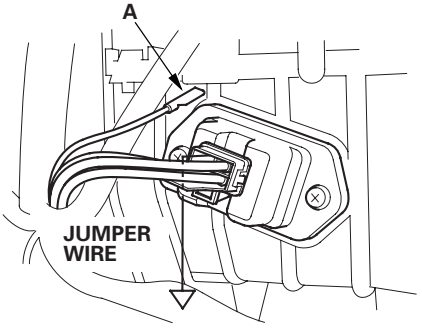

(To 12 V power source on vehicle)

4. Reconnect the 4P connector to the power transistor.

5. Supply 12 volts to the No. 4 cavity with a jumper wire.

6. Turn the ignition switch ON (II), and check that the blower motor runs.

   - If the blower motor does not run, replace the power transistor.
   - If the blower motor runs, the power transistor is OK.

Climate Control Unit Removal and Installation

1. Remove the climate control unit (A) from the dashboard, then disconnect the 30P connector (B). Be careful not to damage the control unit or the dashboard.

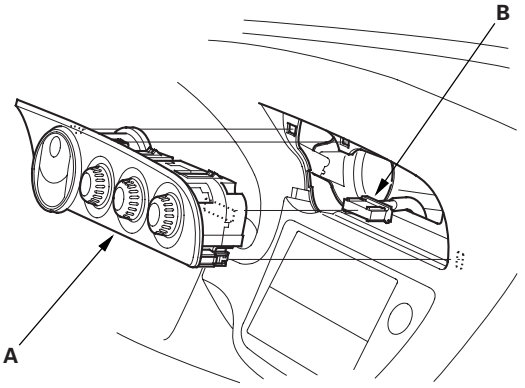

2. Install the control unit in the reverse order of removal. After installation, operate the control unit controls to see if they work properly.

3. Run the self-diagnostic function to confirm that there are no problems in the system (see page 21-8).

Climate Control Unit Bulb Replacement

1. Discharge the static electricity (which accumulated on you when you removed the climate control unit) by touching the door striker or other body parts.

2. Remove the self-tapping screws, then carefully separate the climate control unit to the display (A) and the control unit (B). Do not kink or pull on the wires between the display and the control unit. Do not touch the electronic components on the printed circuit board in the control unit.

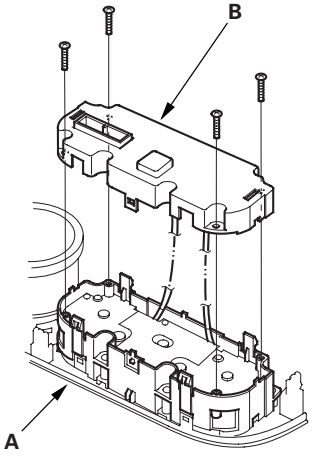

3. Remove the bulb(s) with a flat-tip screwdriver.

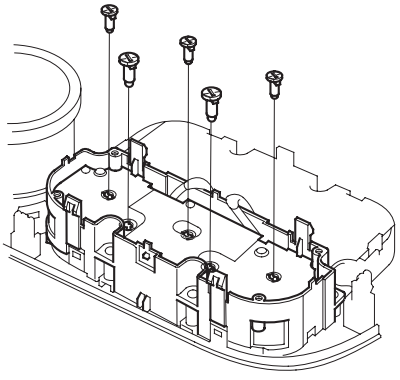

4. Install the bulb in the reverse order of removal.

Dust and Pollen Filter Replacement

The dust and pollen filters should be replaced every 30,000 miles (48,000 km) or 24 months, whichever comes first. Replace the filters more often if the air flow is less than usual.

1. Open the glove box. Remove the glove box stop on each side, then let the glove box hang down (see page 20-67).

2. Remove the filter lid (A) from the blower unit, then pull out the first dust and pollen filter (B). Slide the second filter to the left, and pull it out.

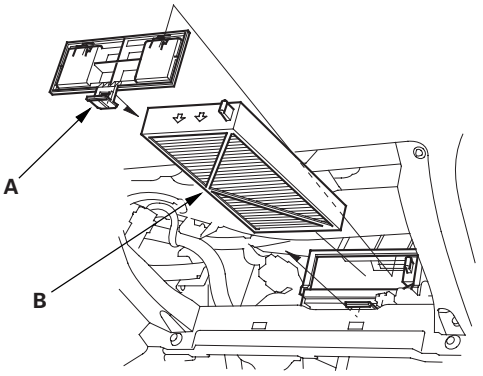

3. Remove the filter (A) from the housing (B), and replace the filter.

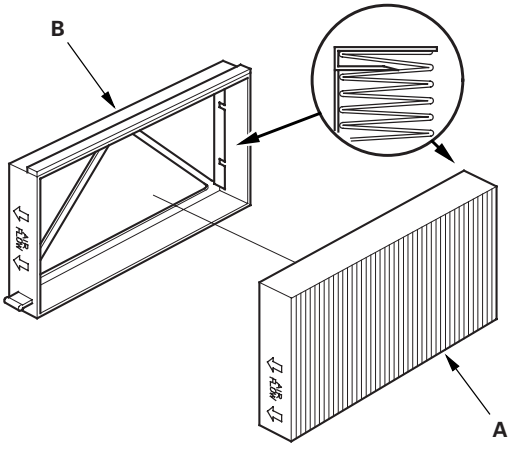

4. Install the filters in the reverse order of removal.

Blower Unit Removal and Installation

1. Remove the passenger's dashboard lower cover (see page 20-67), the right kick panel (see page 20-50), and the glove box (see page 20-67).

2. Cut the plastic cross brace in the glove box opening with diagonal cutters in the area shown. Remove and discard the plastic cross brace.

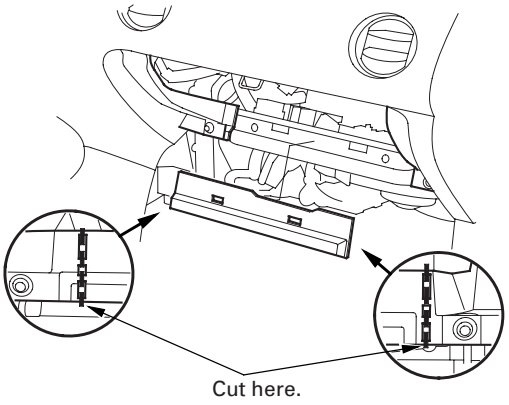

3. Remove the relays (A), then remove the bolts and the glove box frame (B).

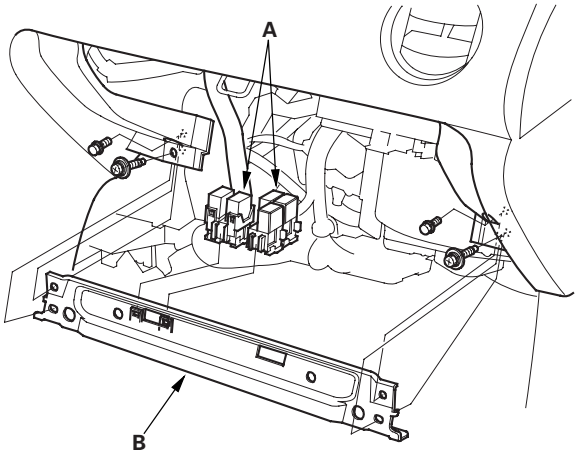

4. Remove the ECM/PCM.

   - '02-04 models (see page 11-284)
   - '05-06 models (see page 11-284)

5. Disconnect the connectors (A) from the blower motor, the power transistor, and the recirculation control motor, then remove the wire harness clips (B).

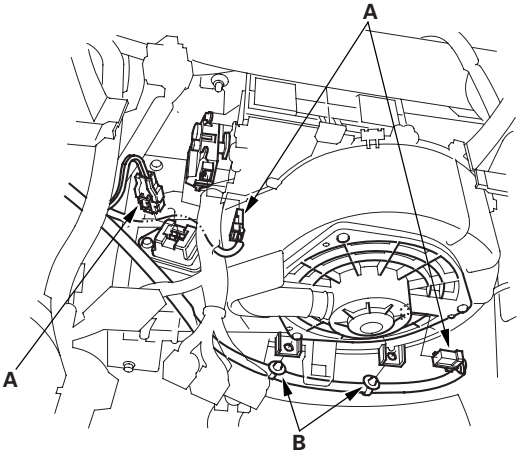

6. Remove the mounting bolts, the mounting nut, and the blower unit.

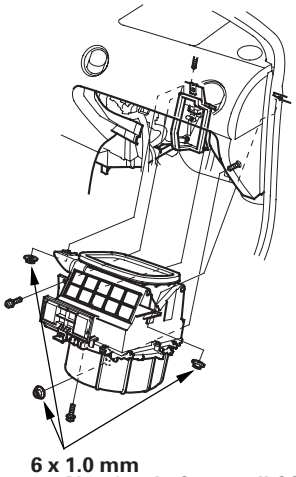

7. Install the unit in the reverse order of removal. Make sure that there is no air leakage.

Blower Unit Component Replacement

Note these items when overhauling the blower unit:

- The recirculation control motor (A), the power transistor (B), the blower motor (C), and the dust and pollen filters (D) can be replaced without removing the blower unit.
- Before reassembly, make sure that the recirculation control linkage and doors move smoothly without binding.
- After reassembly, make sure the recirculation control motor runs smoothly (see page 21-47).

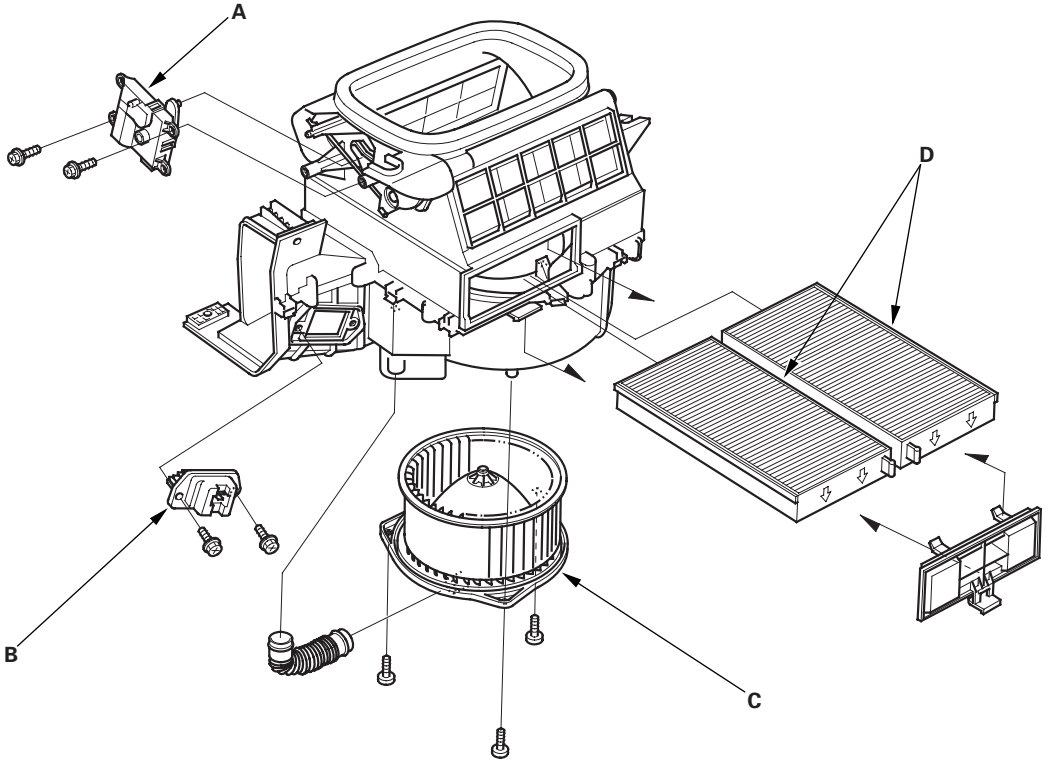

Evaporator Core Replacement

1. Recover the refrigerant with a recovery/recycling/charging station (see page 21-62).

2. Remove the bolt, then disconnect the suction line (A) and the receiver line (B) from the evaporator core.

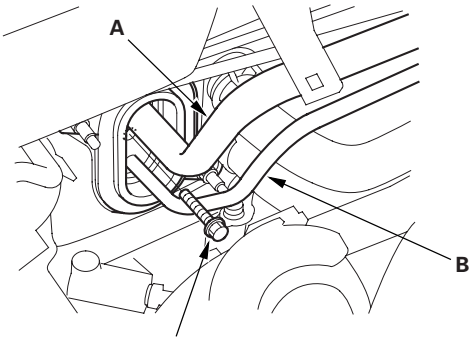

3. Remove the blower unit (see page 21-50).

4. Remove the self-tapping screws and the expansion valve cover.

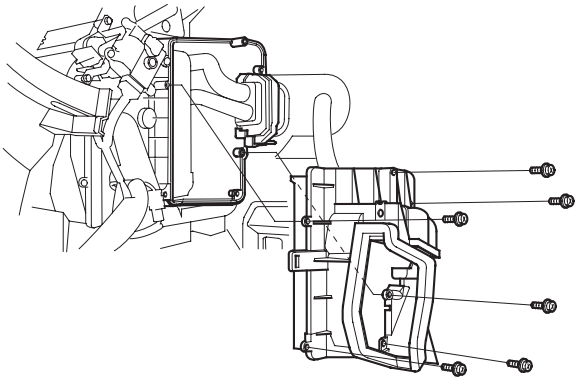

5. Carefully pull out the evaporator core without bending the pipes.

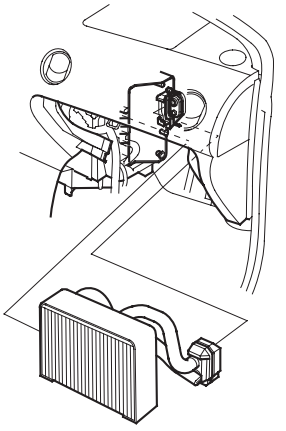

6. Install the core in the reverse order of removal, and note these items:

   - If you're installing a new evaporator core, add refrigerant oil (KEIHIN SP-10) (see page 21-6).
   - Replace the O-rings with new ones at each fitting, and apply a thin coat of refrigerant oil before installing them. Be sure to use the correct O-rings for HFC-134a (R-134a) to avoid leakage.
   - Immediately after using the oil, reinstall the cap on the container, and seal it to avoid moisture absorption.
   - Do not spill the refrigerant oil on the vehicle; it may damage the paint. If the refrigerant oil contacts the paint, wash it off immediately.
   - Make sure that there is no air leakage.
   - Charge the system (see page 21-64).

Heater Unit/Core Replacement

SRS components are located in this area. Review the SRS component locations (see page 23-10), and the precautions and procedures (see page 23-11) before performing repairs or service.

1. Turn the ignition switch ON (II).

2. Turn the mode control dial to the floor vent position. This will prevent the mode control doors from being damaged when the dashboard is removed.

3. Turn the ignition switch OFF.

4. Make sure you have the anti-theft code for the radio, then write down the frequencies for the radio's preset buttons.

5. Disconnect the negative cable from the battery.

6. Disconnect the suction and receiver lines from the evaporator core (see page 21-52).

7. From under the hood, open the cable clamp (A), then disconnect the heater valve cable (B) from the heater valve arm (C). Turn the heater valve arm to the fully opened position as shown.

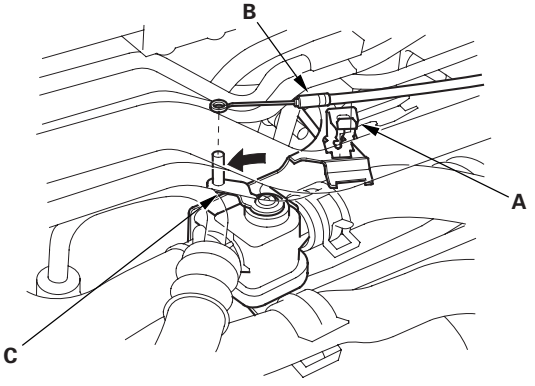

8. When the engine is cool, drain the engine coolant from the radiator (see page 10-6).

9. Slide the hose clamps (A) back, then disconnect the inlet heater hose (B) and the outlet heater hose (C) from the heater core. Engine coolant will run out when the hoses are disconnected; drain it into a clean drip pan. Be sure not to let coolant spill on the electrical parts or the painted surfaces. If any coolant spills, rinse it off immediately.

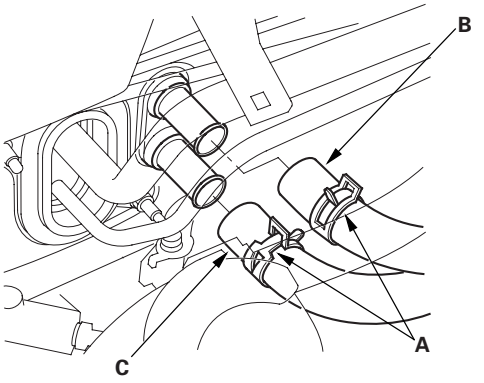

10. Remove the mounting bolt and the heater valve as shown.

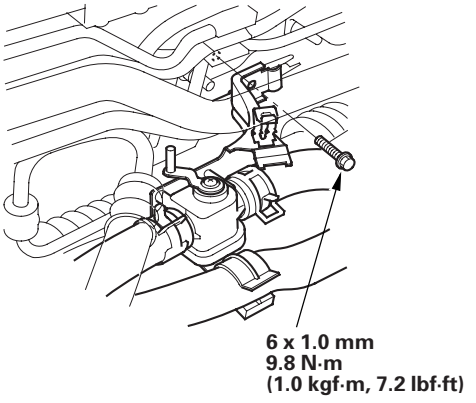

(cont'd)

Heater Unit/Core Replacement (cont'd)

11. Remove the mounting nut from the heater unit. Take care not to damage or bend the fuel lines and the brake lines, etc.

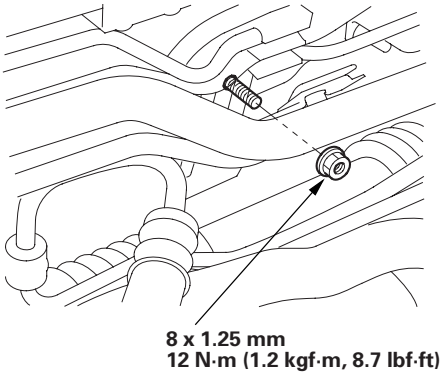

12. Remove the dashboard (see page 20-69).

13. Remove the blower unit (see page 21-50).

14. Disconnect the drain hose (A), then remove the wire harness (B), the mounting bolts and the heater unit (C).

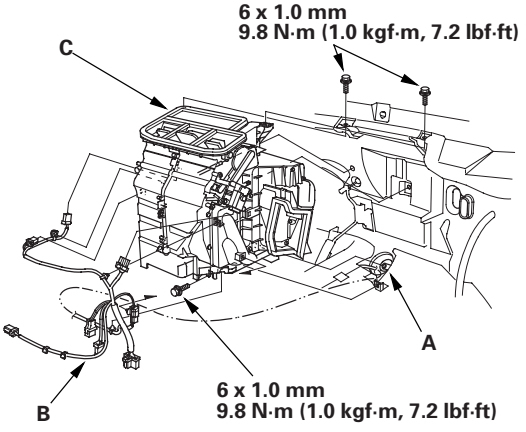

15. Remove the self-tapping screws and the expansion valve cover (A). Carefully pull out the evaporator core (B) so you don't bend the inlet and outlet pipes. Remove the grommet (C), then remove the self-tapping screws and the flange cover (D). Remove the self-tapping screws and the pipe cover (E), then carefully pull out the heater core (F) so you don't bend the inlet and outlet pipes.

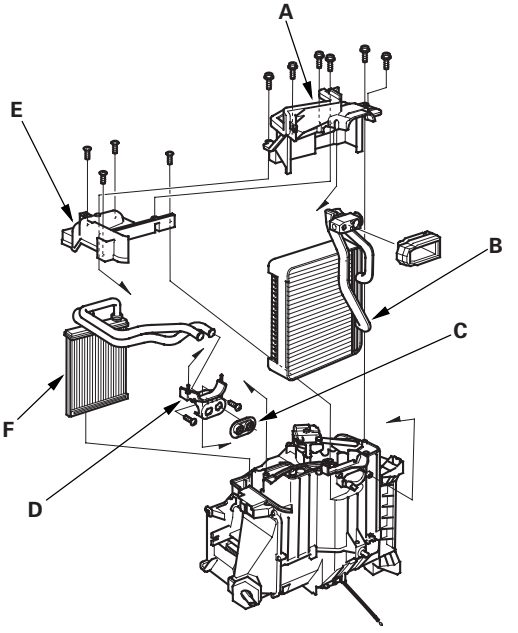

16. Install the heater core and the evaporator core in the reverse order of removal.

17. Install the heater unit in the reverse order of removal, and note these items:

- Do not interchange the inlet and outlet heater hoses, and install the hose clamps securely.
- Refill the cooling system with engine coolant (see page 10-6).
- Be sure to connect the drain hose securely.
- Adjust the heater valve cable (see page 21-55).
- Make sure that there is no coolant leakage.
- Make sure that there is no air leakage.
- Do the ECM/PCM idle learn procedure (see page 11-349).
- Do the power window control unit reset procedure (see page 22-148).
- Enter the anti-theft code for the radio, then enter the customer's radio station presets.
- Refer to evaporator core replacement (see step 6 on page 21-52).

Heater Valve Cable Adjustment

1. From under the hood, open the cable clamp (A), then disconnect the heater valve cable (B) from the heater valve arm (C).

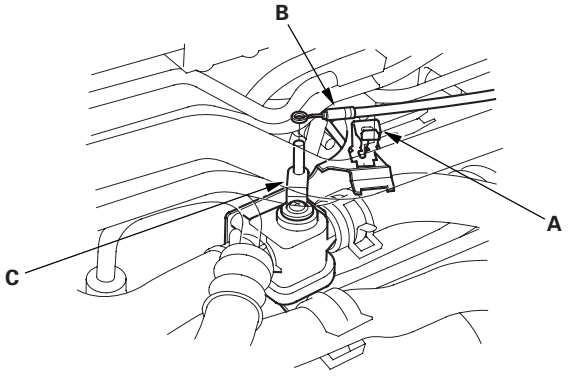

2. From under the dash, disconnect the heater valve cable housing from the cable clamp (A), and disconnect the heater valve cable (B) from the air mix control linkage (C).

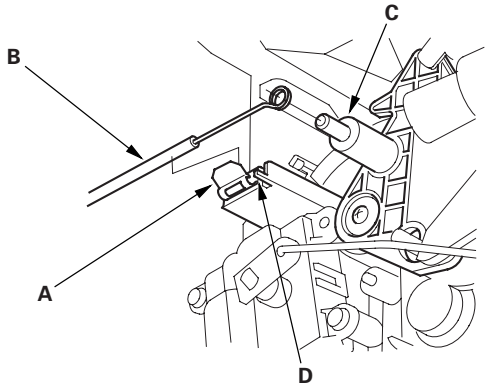

3. Set the temperature control dial on Max Cool with the ignition switch ON (II).

4. Attach the heater valve cable (B) to the air mix control linkage (C) as shown in step 2. Hold the end of the heater valve cable housing against the stop (D), then snap the heater valve cable housing into the cable clamp (A).

5. From under the hood, turn the heater valve arm (C) to the fully closed position as shown, and hold it. Attach the heater valve cable (B) to the heater valve arm, and gently pull on the heater valve cable housing to take up any slack, then install the heater valve cable housing into the cable clamp (A).

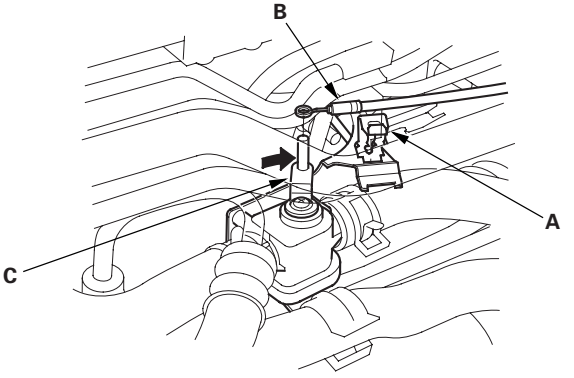

A/C Compressor Replacement

1. If the A/C compressor is marginally operable, run the engine at idle speed, and let the air conditioning work for a few minutes, then shut the engine off.

2. Make sure you have the anti-theft code for the radio, then write down the frequencies for the radio's preset buttons.

3. Disconnect the negative cable from the battery.

4. Recover the refrigerant with a recovery/recycling/charging station (see page 21-62).

5. Remove the alternator (see page 4-46).

6. Remove the bolts, then disconnect the suction line (A) and the discharge line (B) from the A/C compressor. Plug or cap the lines immediately after disconnecting them to avoid moisture and dust contamination.

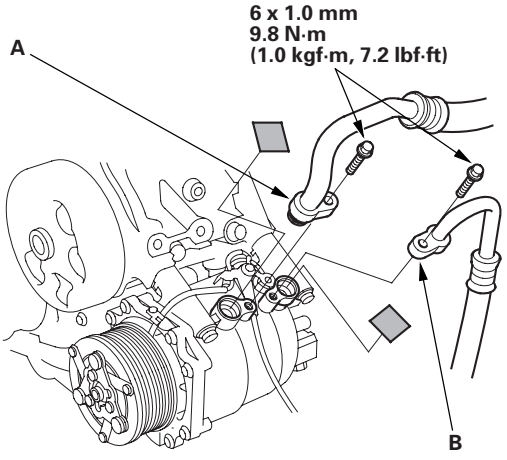

7. Remove the mounting bolts and the A/C compressor.

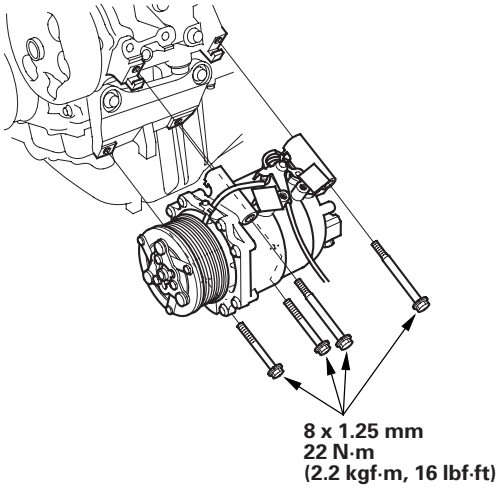

8. Install the A/C compressor in the reverse order of removal, and note these items:

   - If you're installing a new A/C compressor, you must calculate the amount of refrigerant oil to be removed from it (see page 21-6).
   - Replace the O-rings with new ones at each fitting, and apply a thin coat of refrigerant oil before installing them. Be sure to use the correct O-rings for HFC-134a (R-134a) to avoid leakage.
   - Use refrigerant oil (KEIHIN SP-10) for HFC-134a KEIHIN spiral type A/C compressor only.
   - To avoid contamination, do not return the oil to the container once dispensed, and never mix it with other refrigerant oils.
   - Immediately after using the oil, reinstall the cap on the container, and seal it to avoid moisture absorption.
   - Do not spill the refrigerant oil on the vehicle; it may damage the paint. If the refrigerant oil contacts the paint, wash it off immediately.
   - Charge the system (see page 21-64).
   - Do the ECM/PCM idle learn procedure (see page 11-349).
   - Do the power window control unit reset procedure (see page 22-148).
   - Enter the anti-theft code for the radio, then enter the customer's radio station presets.

A/C Compressor Clutch Check

1. Check the armature plate for discoloration, peeling, or other damage. If there is damage, replace the clutch set (see page 21-58).

2. Check the rotor pulley bearing play and drag by rotating the rotor pulley by hand. Replace the clutch set with a new one if it is noisy or has excessive play/drag (see page 21-58).

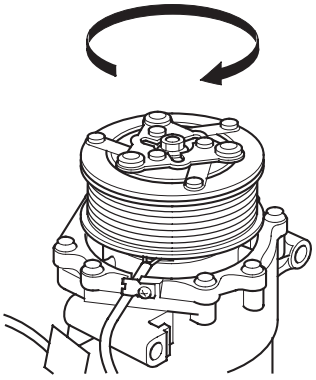

3. Measure the clearance between the rotor pulley (A) and the armature plate (B) all the way around. If the clearance is not within specified limits, remove the armature plate (see step 2 on page 21-58) and add or remove shims as needed to increase or decrease clearance.

   Clearance: 0.35—0.65 mm (0.016—0.026 in.)

   NOTE: The shims are available in four thicknesses: 0.1 mm, 0.2 mm, 0.4 mm, and 0.5 mm.

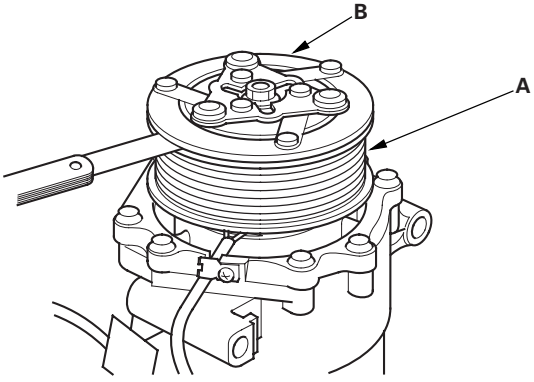

4. Release the field coil connector from the holder, then disconnect it. Check the thermal protector for continuity. If there is no continuity, replace the thermal protector (see page 21-60).

   NOTE: The thermal protector will have no continuity above 252 to 270 ℉ (122 to 132 ℃). When the temperature drops below 241 to 219 ℉ (116 to 104 ℃), the thermal protector will have continuity.

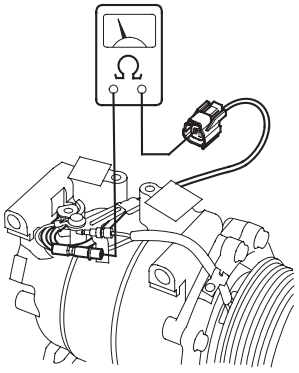

5. Check resistance of the field coil. If resistance is not within specifications, replace the field coil (see step 3 on page 21-58).

   Field Coil Resistance: 3.05—3.35 Ω at 68 ℉ (20 ℃)

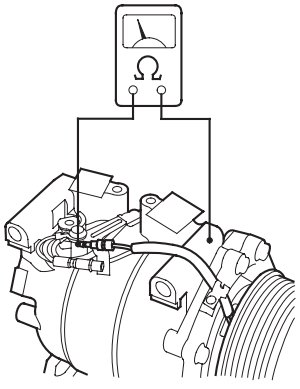

A/C Compressor Clutch Overhaul

Special Tools Required
A/C clutch holder, Robinair 10204, or Kent-Moore J37872, or Honda Tool and Equipment KMT-J33939, commercially available

1. Remove the center nut (A) while holding the armature plate with a commercially available A/C clutch holder (B).

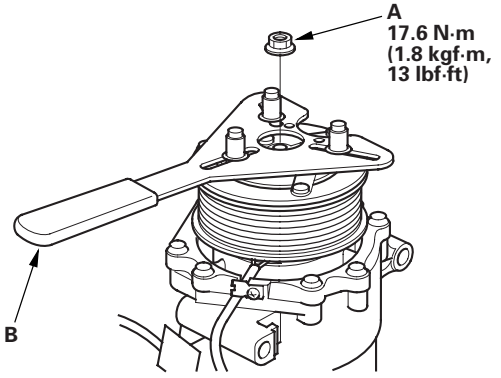

2. Remove the armature plate (A) and shim(s) (B), taking care not to lose the shim(s). If the clutch needs adjustment, increase or decrease the number and thickness of shims as necessary, then reinstall the armature plate, and recheck its clearance (see page 21-57).

   NOTE: The shims are available in four thicknesses: 0.1 mm, 0.2 mm, 0.4 mm, and 0.5 mm.

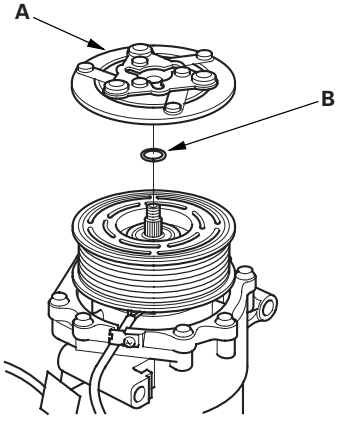

3. If you are replacing the field coil, remove the snap ring (A) with snap ring pliers, then remove the rotor pulley (B). Be careful not to damage the rotor pulley and A/C compressor.

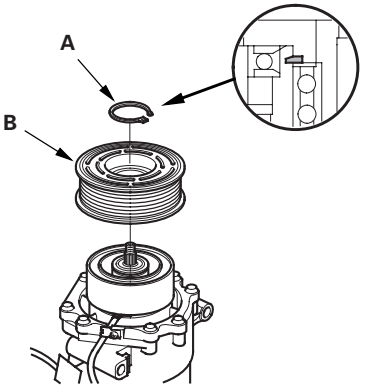

4. Remove the bolt and holder (A), then disconnect the field coil connector (B). Loosen the clamp screw (C) to free the field coil wire. Remove the snap ring (D) with snap ring pliers, then remove the field coil (E). Be careful not to damage the field coil and A/C compressor.

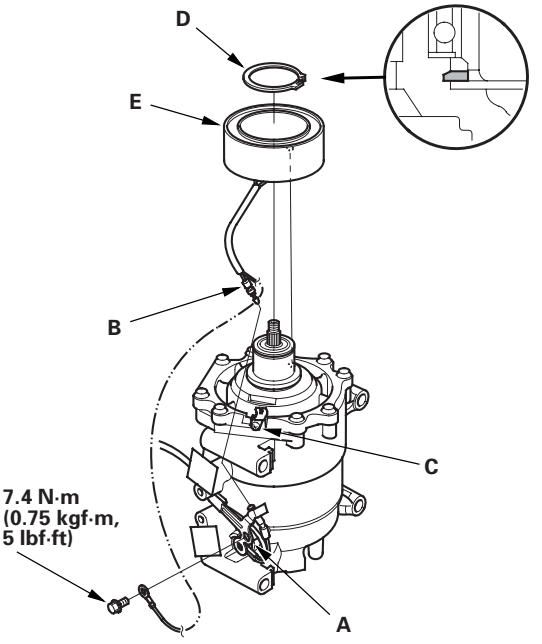

5. Reassemble the clutch in the reverse order of disassembly, and note these items:

   - Install the field coil with the wire side facing down, and align the boss on the field coil with the hole in the A/C compressor.
   - Clean the rotor pulley and A/C compressor sliding surfaces with contact cleaner or other non-petroleum solvent.
   - Install new snap rings, note the installation direction, and make sure they are fully seated in the groove.
   - Make sure that the rotor pulley turns smoothly after it's reassembled.
   - Route and clamp the wires properly or they can be damaged by the rotor pulley.

A/C Compressor Thermal Protector Replacement

1. Remove the bolt, the ground terminal (A), and the holder (B). Disconnect the field coil connector (C), then remove the thermal protector (D).

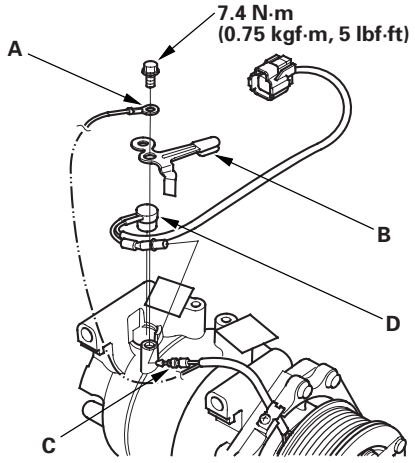

2. Replace the thermal protector (A) with a new one, and apply silicone sealant (B) to the bottom of the thermal protector.

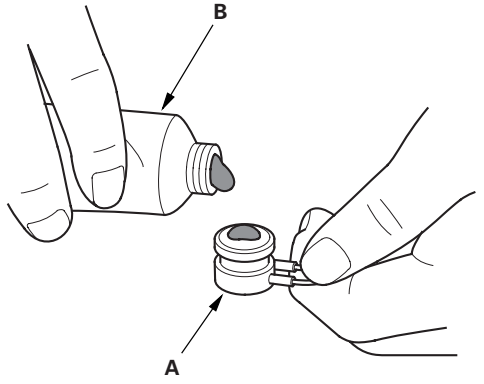

3. Install the thermal protector in the reverse order of removal.

A/C Compressor Relief Valve Replacement

1. Recover the refrigerant with a recovery/recycling/charging station (see page 21-62).

2. Remove the relief valve (A) and the O-ring (B). Plug the opening to keep foreign matter from entering the system and the compressor oil from running out.

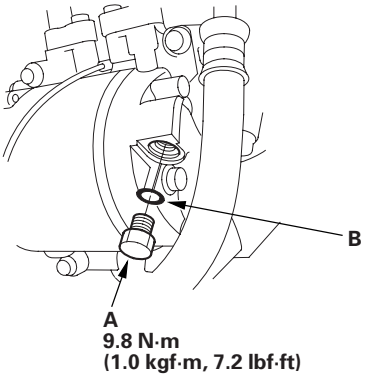

3. Clean the mating surfaces.

4. Replace the O-ring with a new one at the relief valve, and apply a thin coat of refrigerant oil before installing it.

5. Remove the plug, and install and tighten the relief valve.

6. Charge the system (see page 21-64).

A/C Condenser Replacement

1. Recover the refrigerant with a recovery/recycling/charging station (see page 21-62).

2. Remove the front bumper.

   - ’02-04 models (see page 20-90).
   - ’05-06 models (see page 20-91).

3. Remove the nut and the bolt, then disconnect the discharge line (A) and the A/C condenser line (B) from the A/C condenser. Plug or cap the lines immediately after disconnecting them to avoid moisture and dust contamination.

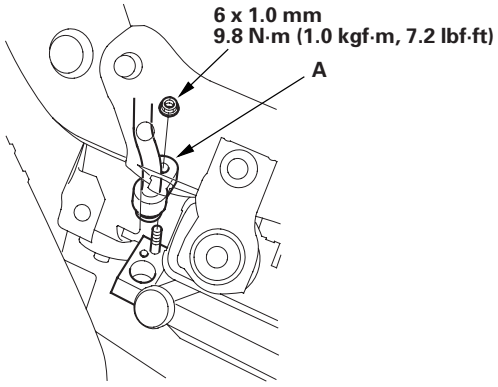

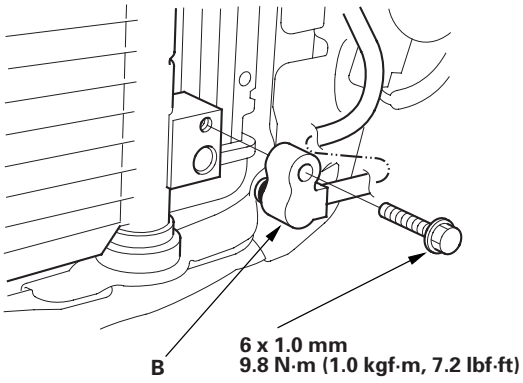

4. Remove the mounting bolts, then remove the A/C condenser by lifting it up. Be careful not to damage the radiator or the A/C condenser fins when removing the A/C condenser.

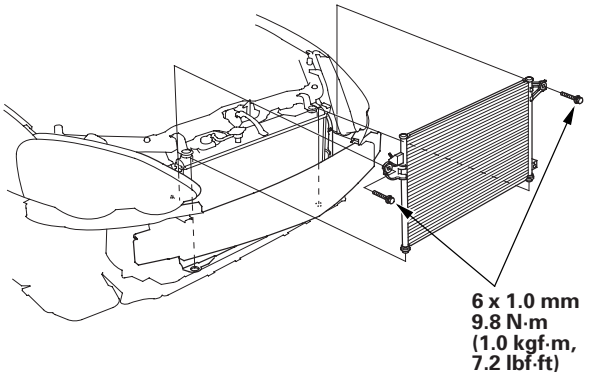

5. Install the A/C condenser in the reverse order of removal, and note these items:

   - If you’re installing a new A/C condenser, add refrigerant oil (KEIHIN SP-10) (see page 21-6).
   - Replace the O-rings with new ones at each fitting, and apply a thin coat of refrigerant oil before installing them. Be sure to use the correct O-rings for HFC-134a (R-134a) to avoid leakage.
   - Immediately after using the oil, reinstall the cap on the container, and seal it to avoid moisture absorption.
   - Do not spill the refrigerant oil on the vehicle; it may damage the paint. If the refrigerant oil contacts the paint, wash it off immediately.
   - Be careful not to damage the radiator or the A/C condenser fins when installing the A/C condenser.
   - Charge the system (see page 21-64).

Refrigerant Recovery

⚠CAUTION

- Air conditioning refrigerant or lubricant vapor can irritate your eyes, nose, or throat.
- Be careful when connecting service equipment.
- Do not breathe refrigerant or vapor.

Use only service equipment that is U.L.-listed and is certified to meet the requirements of SAE J2210 to remove HFC-134a (R-134a) from the air conditioning system.

If accidental system discharge occurs, ventilate work area before resuming service.

Additional health and safety information may be obtained from the refrigerant and lubricant manufacturers.

1. Connect an R-134a refrigerant recovery/recycling/charging station (A) to the high-pressure service port (B) and the low-pressure service port (C), as shown, following the equipment manufacturer's instructions.

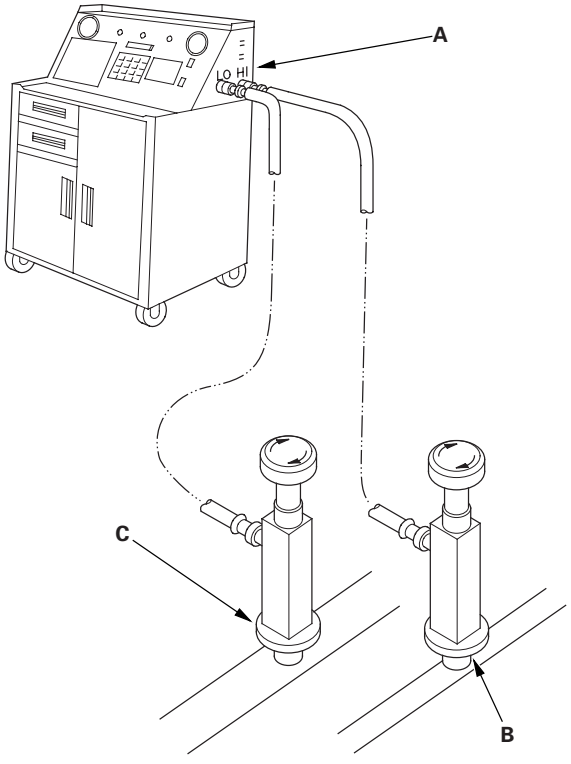

2. Measure the amount of refrigerant oil removed from the A/C system after the recovery process is completed. Be sure to put the same amount of new refrigerant oil back into the A/C system before charging.

System Evacuation

⚠CAUTION

- Air conditioning refrigerant or lubricant vapor can irritate your eyes, nose, or throat.
- Be careful when connecting service equipment.
- Do not breathe refrigerant or vapor.

Use only service equipment that is U.L.-listed and is certified to meet the requirements of SAE J2210 to remove HFC-134a (R-134a) from the air conditioning system.

If accidental system discharge occurs, ventilate work area before resuming service.

Additional health and safety information may be obtained from the refrigerant and lubricant manufacturers.

1. When an A/C system has been opened to the atmosphere, such as during installation or repair, it must be evacuated using an R-134a refrigerant recovery/recycling/charging station. (If the system has been open for several days, the receiver/dryer should be replaced, and the system should be evacuated for several hours.)

2. Connect an R-134a refrigerant recovery/recycling/charging station (A) to the high-pressure service port (B) and the low-pressure service port (C), as shown, following the equipment manufacturer's instructions. Evacuate the system.

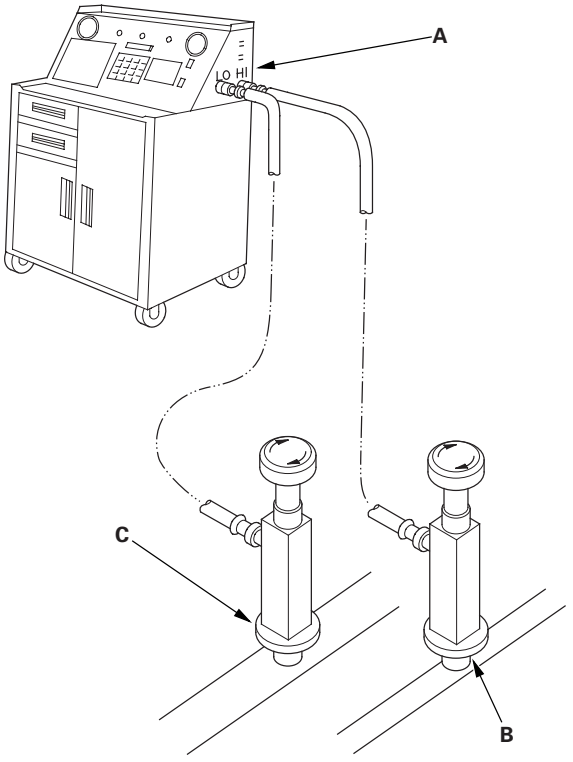

3. If the low-pressure does not reach more than 93.3 kPa (700 mmHg, 27.6 in.Hg) within 15 minutes, there is probably a leak in the system. Partially charge the system, and check for leaks (see step 3 on page 21-65).

System Charging

⚠CAUTION

- Air conditioning refrigerant or lubricant vapor can irritate your eyes, nose, or throat.
- Be careful when connecting service equipment.
- Do not breathe refrigerant or vapor.

Use only service equipment that is U.L.-listed and is certified to meet the requirements of SAE J2210 to remove HFC-134a (R-134a) from the air conditioning system.

If accidental system discharge occurs, ventilate work area before resuming service.

Additional health and safety information may be obtained from the refrigerant and lubricant manufacturers.

1. Connect an R-134a refrigerant recovery/recycling/charging station (A) to the high-pressure service port (B) and the low-pressure service port (C), as shown, following the equipment manufacturer's instructions.

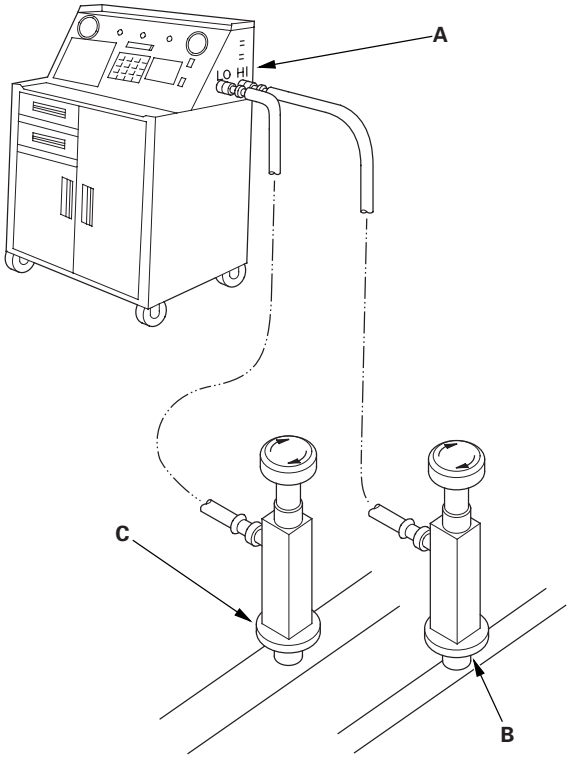

2. Evacuate the system (see page 21-63).

3. Add the same amount of new refrigerant oil to the system that was removed during recovery. Use only KEIHIN SP-10 refrigerant oil.

4. Charge the system with the specified amount of R-134a refrigerant. Do not overcharge the system; the compressor will be damaged.

   Select the appropriate units of measure for your refrigerant charging station.

   Refrigerant Capacity:
   500 to 550 g
   0.50 to 0.55 kg
   1.1 to 1.2 lbs
   17.6 to 19.4 oz

5. Check for refrigerant leaks (see page 21-65).

6. Check for system performance (see page 21-66).

Refrigerant Leak Test

Special Tools Required
Leak detector, Honda Tool and Equipment YGK-H-10PM commercially available

⚠ WARNING

- Compressed air mixed with R-134a forms a combustible vapor.
- The vapor can burn or explode causing serious injury.
- Never use compressed air to pressure test R-134a service equipment or vehicle air conditioning systems.

⚠ CAUTION

- Air conditioning refrigerant or lubricant vapor can irritate your eyes, nose, or throat.
- Be careful when connecting service equipment.
- Do not breathe refrigerant or vapor.

Use only service equipment that is U.L.-listed and is certified to meet the requirements of SAE J2210 to remove HFC-134a (R-134a) from the air conditioning system.

If accidental system discharge occurs, ventilate work area before resuming service.

R-134a service equipment or vehicle air conditioning systems should not be pressure tested or leak tested with compressed air.

Additional health and safety information may be obtained from the refrigerant and lubricant manufacturers.

1. Connect an R-134a refrigerant recovery/recycling/charging station (A) to the high-pressure service port (B) and the low-pressure service port (C), as shown, following the equipment manufacturer's instructions.

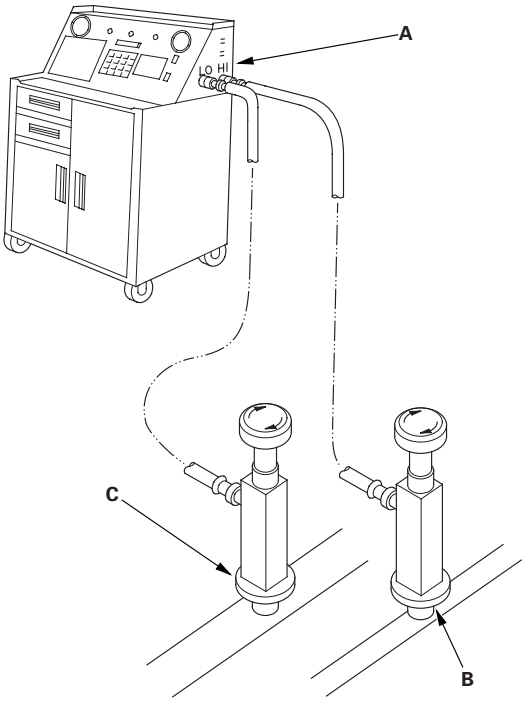

2. Open high pressure valve to charge the system to the specified capacity, then close the supply valve, and disconnect the charging station fittings.

   Select the appropriate units of measure for your refrigerant charging station.

   Refrigerant Capacity:
   500 to 550 g
   0.50 to 0.55 kg
   1.1 to 1.2 lbs
   17.6 to 19.4 oz

3. Check the system for leaks using an R-134a refrigerant leak detector with an accuracy of 14 g (0.5 oz) per year or better.

4. If you find leaks that require the system to be opened (to repair or replace hoses, fittings, etc.), recover the system.

5. After checking and repairing leaks, the system must be evacuated.

A/C System Test

Performance Test

⚠ WARNING

- Compressed air mixed with R-134a forms a combustible vapor.
- The vapor can burn or explode causing serious injury.
- Never use compressed air to pressure test R-134a service equipment or vehicle air conditioning systems.

⚠ CAUTION

- Air conditioning refrigerant or lubricant vapor can irritate your eyes, nose, or throat.
- Be careful when connecting service equipment.
- Do not breathe refrigerant or vapor.

The performance test will help determine if the air conditioner system is operating within specifications.

Use only service equipment that is U.L.-listed and is certified to meet the requirements of SAE J2210 to remove HFC-134a (R-134a) from the air conditioning system.

If accidental system discharge occurs, ventilate work area before resuming service.

R-134a service equipment or vehicle air conditioning systems should not be pressure tested or leak tested with compressed air.

Additional health and safety information may be obtained from the refrigerant and lubricant manufacturers.

1. Connect an R-134a refrigerant recovery/recycling/charging station to the high-pressure service port and the low-pressure service port, following the equipment manufacturer's instructions.

2. Determine the relative humidity and air temperature.

3. Remove the glove box stops, and let the glove box hang down (see page 20-67).

4. Insert a thermometer (A) in the center vent, and place a thermometer (B) near the blower unit.

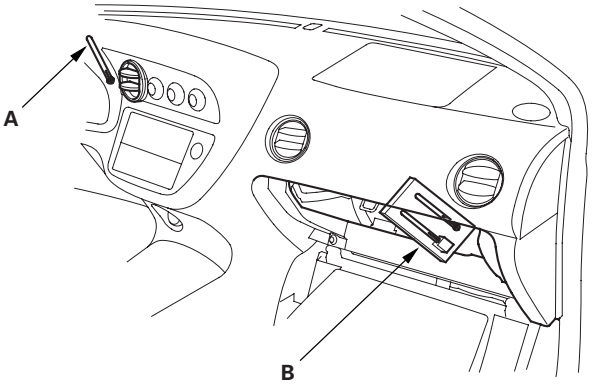

5. Test conditions:

   - Avoid direct sunlight.
   - Open the hood.
   - Open the front doors.
   - Set the temperature control dial on Max Cool (58 ℉ or 18 ℃), the mode control dial on Vent and the recirculation control switch on Recirculate.
   - Turn the A/C switch on and the fan switch on Max.
   - Run the engine at 1,500 rpm.
   - No driver or passengers in vehicle.

6. After running the air conditioning for 10 minutes under the above test conditions, read the delivery temperature from the thermometer in the center vent, the intake temperature near the blower unit, and the high and low system pressure from the A/C gauges.

7. To complete the charts:

- Mark the delivery temperature along the vertical line.
- Mark the intake temperature (ambient air temperature) along the bottom line.
- Draw a line straight up from the air temperature to the humidity.
- Mark a point 10 % above and 10 % below the humidity level.
- From each point, draw a horizontal line across the delivery temperature.
- The delivery temperature should fall between the two lines.
- Complete the low-side pressure test and high-side pressure test in the same way.
- Any measurements outside the line may indicate the need for further inspection.

Example	Intake temperature (dry):	86 ℉ (30 ℃) Humidity level 70 %
	Intake temperature (wet):	77.9 ℉ (25.5 ℃)
	Intake pressure:	281 kPa (2.9 kgf/cm^2) (40.8 psi)
	Delivery temperature:	56.1 ℉ (13.4 ℃)
	Delivery pressure:	1,707 kPa (17.4 kgf/cm^2) (247.5 psi)
Results:	Within normal range	

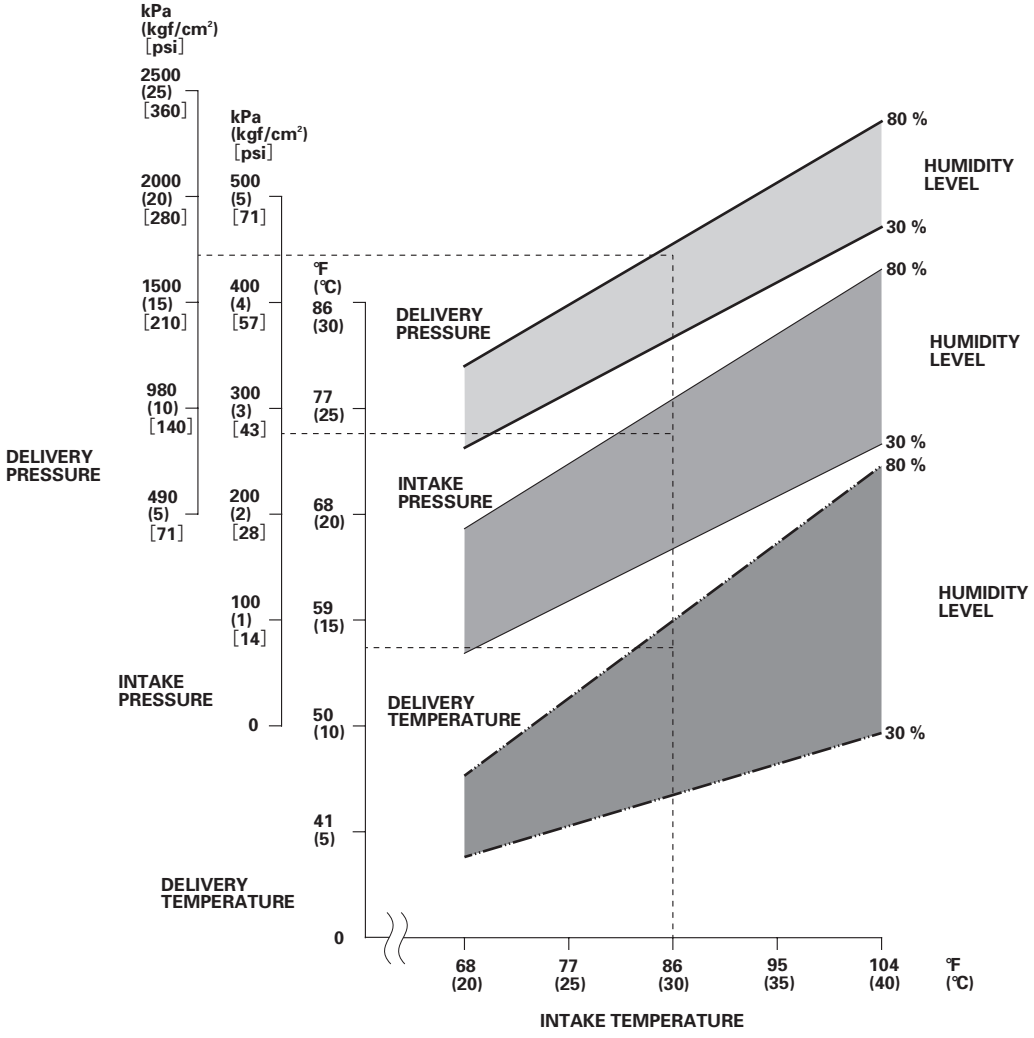

(cont'd)

A/C System Test (cont'd)

Pressure Test

Test results	Related symptoms	Probable cause	Remedy
Discharge (high) pressure abnormally high	After stopping A/C compressor, pressure drops to about 196 kPa (2.0 kgf/cm^2, 28 psi) quickly, and then falls gradually.	Air in system	Recover, evacuate (see page 21-63), and recharge with specified amount (see page 21-64).
	Reduced or no airflow through A/C condenser.	• Clogged A/C condenser or radiator fins • A/C condenser or radiator fan not working properly	• Clean. • Check voltage and fan rpm. • Check fan direction.
	Line to A/C condenser is excessively hot.	Restricted flow of refrigerant in system	Replace restricted lines.
Discharge pressure abnormally low	High and low-pressures are balanced soon after stopping A/C compressor. Low side is higher than normal.	• Faulty A/C compressor discharge valve • Faulty A/C compressor seal	Replace the A/C compressor.
	Outlet of expansion valve is not frosted, low-pressure gauge indicates vacuum.	• Faulty expansion valve • Moisture in system	• Replace. • Recover, evacuate, and recharge with specified amount.
Suction (low) pressure abnormally low	Expansion valve is not frosted, and low-pressure line is not cold. Low-pressure gauge indicates vacuum.	• Frozen expansion valve (Moisture in system) • Faulty expansion valve	• Recover, evacuate, and recharge with specified amount. • Replace the expansion valve.
	Discharge temperature is low, and the airflow from vents is restricted.	Frozen evaporator	Run the fan with A/C compressor off, then check evaporator temperature sensor.
	Expansion valve is frosted.	Clogged expansion valve	Clean or replace.
	Receiver/dryer outlet is cool, and inlet is warm (should be warm during operation).	Clogged receiver/dryer	Replace.
Suction pressure abnormally high	Low-pressure hose and check joint are cooler than the temperature around evaporator.	Expansion valve open too long	Repair or replace.
	Suction pressure is lowered when A/C condenser is cooled by water.	Excessive refrigerant in system	Recover, evacuate, and recharge with specified amount.
	High and low-pressures are equalized as soon as the A/C compressor is stopped, and both gauges fluctuate while running.	• Faulty gasket • Faulty high-pressure valve • Foreign particle stuck in high-pressure valve	Replace the A/C compressor.
Suction and discharge pressures abnormally high	Reduced airflow through A/C condenser.	• Clogged A/C condenser or radiator fins • A/C condenser or radiator fan not working properly	• Clean. • Check voltage and fan rpm. • Check fan direction.
Suction and discharge pressures abnormally low	Low-pressure hose and metal end areas are cooler than evaporator.	Clogged or kinked low-pressure hose parts	Repair or replace.
	Temperature around expansion valve is too low compared with that around receiver/dryer.	Clogged high-pressure line	Repair or replace.
Refrigerant leaks	A/C compressor clutch is dirty.	A/C compressor shaft seal leaking	Replace the A/C compressor.
	A/C compressor bolt(s) are dirty.	Leaking around bolt(s)	Tighten bolt(s) or replace A/C compressor.
	A/C compressor gasket is wet with oil.	Gasket leaking	Replace the A/C compressor.

Body Electrical

Body Electrical
Special Tools 22-2
General Troubleshooting Information 22-3
Relay and Control Unit Locations 22-7
Connectors and Harnesses 22-11
Fuse/Relay Boxes ... 22-54
Power Distribution 22-56
Ground Distribution ... 22-59
Under-dash Fuse/ Relay Box 22-60
Battery 22-61
Relays 22-62
*** Ignition Switch ... 22-64**
*** Gauges**
Component Location Index 22-65
Self-diagnostic Function 22-68
Circuit Diagram 22-70
Gauge Assembly Replacement 22-74
Coolant Temperature Gauge Troubleshooting ... 22-74
Vehicle Speed Signal Circuit Troubleshooting 22-75
VSS Replacement 22-77
Resetting the Maintenance Required Indicator 22-77
Exterior Lights
Component Location Index 22-78
Circuit Diagram 22-81
Daytime Running Lights Control Unit Input Test (Canada) 22-86
Headlight Adjustment 22-88
Headlight Replacement 22-89
Combination Light Switch Test/Replacement 22-90
Bulb Replacement 22-91
Taillight Replacement 22-93
High Mount Brake Light Replacement 22-94
License Plate Lights Replacement 22-94
Brake Pedal Position Switch Test 22-95
Turn Signal/Hazard Flasher
Component Location Index 22-96
Circuit Diagram 22-97
Turn Signal/Hazard Relay Input Test 22-98
Hazard Warning Switch Test 22-99
Entry Light Control System
Component Location Index 22-100
Circuit Diagram 22-101
Control Unit Input Test 22-102
Ignition Key Switch Test 22-104
Ignition Key Light Test 22-104
Interior Lights
Component Location Index 22-105
Circuit Diagram 22-106
Spotlights Test/Replacement -With Moonroof 22-107
Ceiling Light Test/ Replacement 22-107
Cargo Area Light Test/ Replacement 22-108
Hatch Latch Switch Test 22-108
Beverage Holder Light Replacement 22-109
Glove Box Light Test/ Replacement 22-109
* Audio System
Component Location Index 22-110
Circuit Diagram 22-111
System Description 22-114
Audio Unit Removal/ Installation 22-118
Speaker Replacement 22-120
Front Stereo Amplifier Replacement-With BOSE Sound System 22-122
Rear Stereo Amplifier and Woofer Replacement- With BOSE Sound System 22-123
Window Antenna Test 22-124
Window Antenna Repair 22-124
Rear Window Defogger
Component Location Index 22-125
Circuit Diagram 22-126
Function Test 22-127
Defogger Wire Repair 22-127
Window Antenna Coil Test 22-128
Noise Condenser Capacity Test 22-128
Moonroof
Component Location Index 22-129
Circuit Diagram 22-130
Moonroof Switch Test/ Replacement 22-131
Moonroof Motor Test 22-131
Horns
Component Location Index 22-132
Circuit Diagram 22-133
Horn Test/Replacement 22-133
Horn Switch Test 22-134
Power Mirrors
Component Location Index 22-135
Circuit Diagram 22-136
Function Test 22-137
Power Mirror Switch Test/Replacement 22-138
Power Mirror Actuator Test 22-138
Power Mirror Actuator Replacement 22-139
Power Windows
Component Location Index 22-141
Circuit Diagram 22-142
Master Switch Input Test 22-143
Master Switch Test/ Replacement 22-145
Passenger's Window Switch Test/Replacement 22-146
Driver's Window Motor Test 22-147
Resetting the Power Window Control Unit 22-148
Passenger's Window Motor Test 22-148
Wipers/Washers
Component Location Index 22-149
Circuit Diagram 22-151
Wiper/Washer Switch Test/Replacement 22-153
Control Unit Input Test 22-154
Wiper Motor Test 22-156
Washer Motor Test 22-157
Washer Fluid Level Switch Test (Canada) 22-157
Wiper Motor Replacement ... 22-158
Washer Reservoir Replacement 22-159
Washer Tube Replacement 22-160
Accessory Power Socket
Circuit Diagram 22-161
Accessory Power Socket Test/Replacement 22-162
Keyless/Power Door Lock System
Component Location Index 22-163
Circuit Diagram 22-164
Control Unit Input Test 22-166
Keyless Receiver Unit Input Test 22-169
Door Lock Knob Switch Test 22-170
Door Lock Switch Test 22-170
Hatch Lock Actuator Test 22-171
Door Lock Actuator Test 22-172
Transmitter Test 22-173
Transmitter Programming ... 22-174
Immobilizer System
Component Location Index 22-175
System Description 22-176
Circuit Diagram 22-177
Troubleshooting 22-178
System Check 22-182
Status Log 22-183
Immobilizer Control Unit- Receiver Replacement 22-184
Multiplex Control System
Component Location Index 22-185
Circuit Diagram 22-186
System Description 22-188
Troubleshooting 22-189
Multiplex Control Unit Input Test 22-193
Security Alarm System
Component Location Index 22-196
Circuit Diagram 22-198
System Description 22-200
Security Control Unit Input Test 22-201
Hood Switch Test 22-204
Security Hatch Lock Knob Switch Test 22-204
Door Key Cylinder Switch Test 22-205
Security Horn Test 22-205
Seat Heaters
Component Location Index 22-206
Circuit Diagram 22-207
Seat Heater Switch Test/Replacement 22-208
Seat Heater Test 22-208

Special Tools

Ref. No.	Tool Number	Description	Qty
①	07WAZ-001010A	MPCS Service Connector	1
②	07LAJ-PT3020A	Test Harness	1
③	07XAJ-001000A or 07XMJ-001000A	Terminal Inspection Feeler Tool Set	1

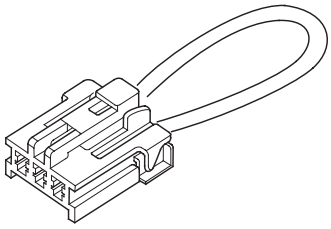

①

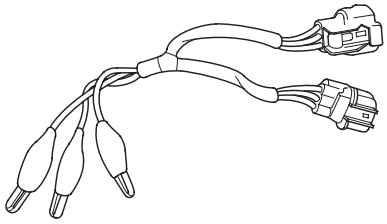

②

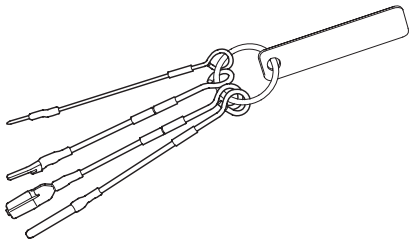

③

General Troubleshooting Information

Tips and Precautions

Before Troubleshooting

1. Check applicable fuses in the appropriate fuse/relay box.

2. Check the battery for damage, state of charge, and clean and tight connections.

NOTICE

- Do not quick-charge a battery unless the battery ground cable has been disconnected, otherwise you will damage the alternator diodes.
- Do not attempt to crank the engine with the battery ground cable loosely connected or you will severely damage the wiring.

Handling Connectors

- Make sure the connectors are clean and have no loose wire terminals.
- Make sure multiple cavity connectors are packed with dielectric grease (except watertight connectors).
- All connectors have push-down release type locks (A).

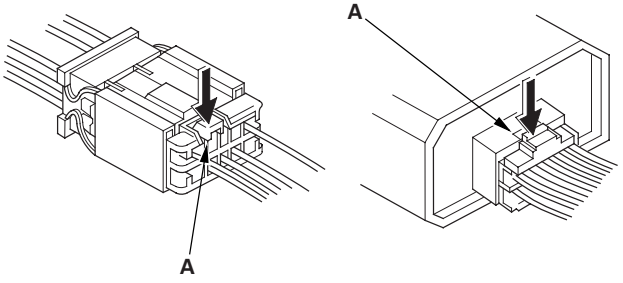

- Some connectors have a clip on their side used to attach them to a mount bracket on the body or on another component. This clip has a pull type lock.
- Some mounted connectors cannot be disconnected unless you first release the lock and remove the connector from its mount bracket (A).

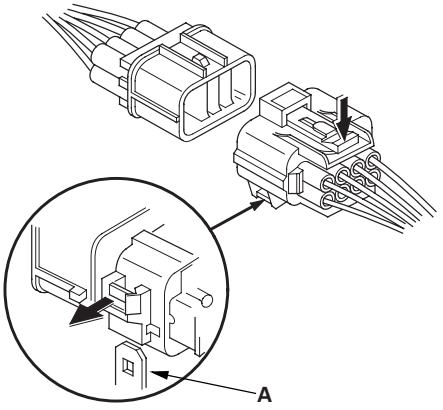

- Never try to disconnect connectors by pulling on their wires; pull on the connector halves instead.
- Always reinstall plastic covers.

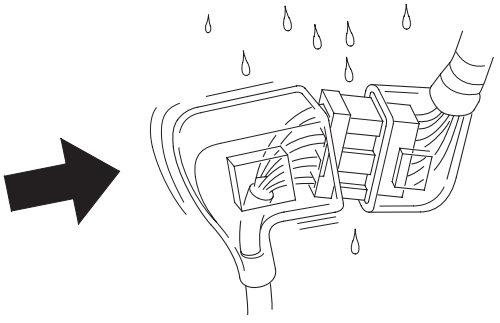

- Before connecting connectors, make sure the terminals (A) are in place and not bent.

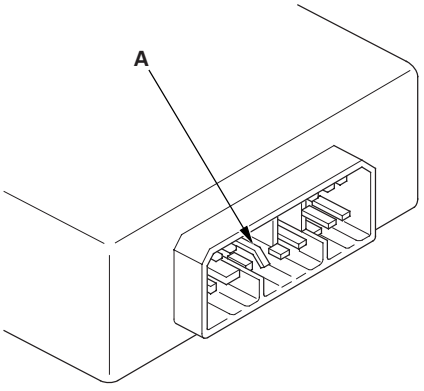

(cont'd)

General Troubleshooting Information (cont'd)

- Check for loose retainer (A) and rubber seals (B).

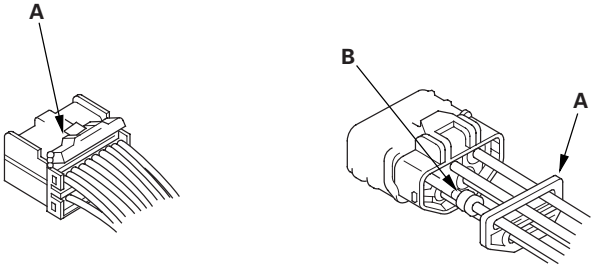

- The backs of some connectors are packed with dielectric grease. Add grease if necessary. If the grease is contaminated, replace it.

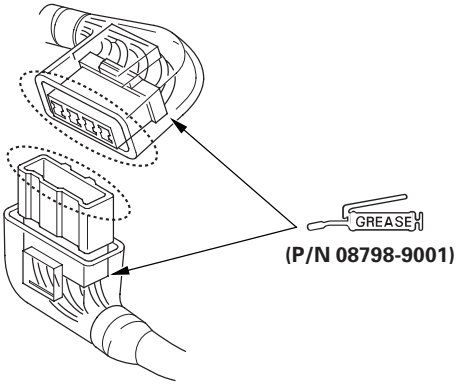

- Insert the connector all the way and make sure it is securely locked.
- Position wires so that the open end of the cover faces down.

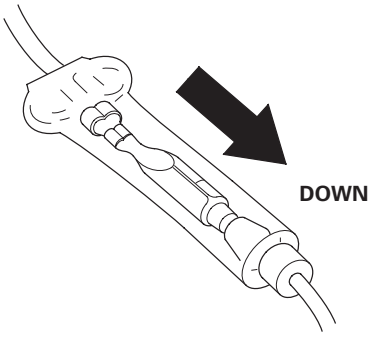

Handling Wires and Harnesses

- Secure wires and wire harnesses to the frame with their respective wire ties at the designated locations.
- Remove clips carefully; don't damage their locks (A).

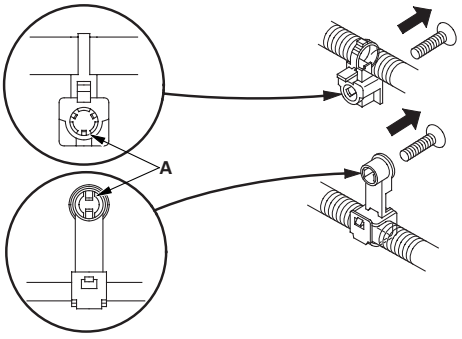

- Slip pliers (A) under the clip base and through the hole at an angle, then squeeze the expansion tabs to release the clip.

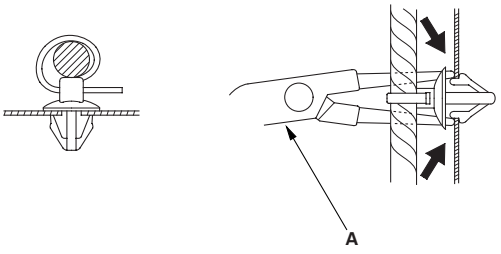

- After installing harness clips, make sure the harness doesn't interfere with any moving parts.
- Keep wire harnesses away from exhaust pipes and other hot parts, from sharp edges of brackets and holes, and from exposed screws and bolts.
- Seat grommets in their grooves properly (A). Do not leave grommets distorted (B).

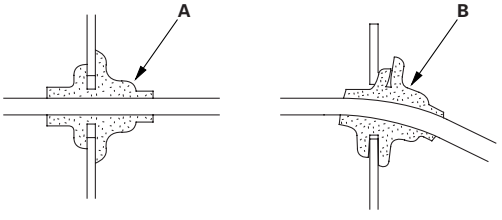

Testing and Repairs

- Do not use wires or harnesses with broken insulation. Replace them or repair them by wrapping the break with electrical tape.
- After installing parts, make sure that no wires are pinched under them.
- When using electrical test equipment, follow the manufacturer's instructions and those described in this manual.
- If possible, insert the probe of the tester from the wire side (except waterproof connector).

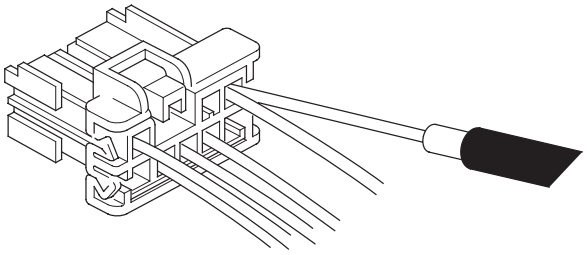

- Use a probe with a tapered tip.

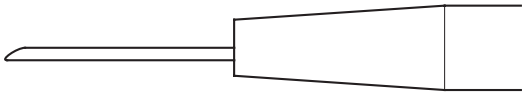

- Refer to the instructions in the Honda Terminal Kit for identification and replacement of connector terminals.

(cont'd)

General Troubleshooting Information (cont'd)

Five-step Troubleshooting

1. Verify The Complaint
   Turn on all the components in the problem circuit to verify the customer complaint. Note the symptoms. Do not begin disassembly or testing until you have narrowed down the problem area.

2. Analyze The Schematic
   Look up the schematic for the problem circuit. Determine how the circuit is supposed to work by tracing the current paths from the power feed through the circuit components to ground. If several circuits fail at the same time, the fuse or ground is a likely cause.

   Based on the symptoms and your understanding of the circuit operation, identify one or more possible causes of the problem.

3. Isolate The Problem By Testing The Circuit
   Make circuit tests to check the diagnosis you made in step 2. Keep in mind that a logical, simple procedure is the key to efficient troubleshooting. Test for the most likely cause of failure first. Try to make tests at points that are easily accessible.

4. Fix The Problem
   Once the specific problem is identified, make the repair. Be sure to use proper tools and safe procedures.

5. Make Sure The Circuit Works
   Turn on all components in the repaired circuit in all modes to make sure you've fixed the entire problem. If the problem was a blown fuse, be sure to test all of the circuits on the fuse. Make sure no new problems turn up and the original problem does not recur.

Wire Color Codes

The following abbreviations are used to identify wire colors in the circuit schematics:

WHT	White
YEL	Yellow
BLK	Black
BLU	Blue
GRN	Green
RED	Red
ORN	Orange
PNK	Pink
BRN	Brown
GRY	Gray
PUR	Purple
LT BLU	Light Blue
LT GRN	Light Green

The wire insulation has one color or one color with another color stripe. The second color is the stripe.

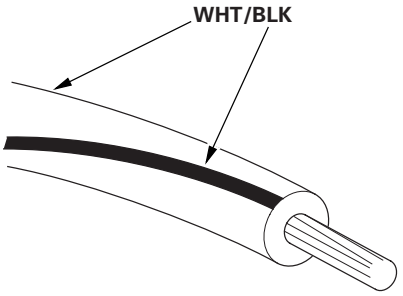

Relay and Control Unit Locations

Engine Compartment

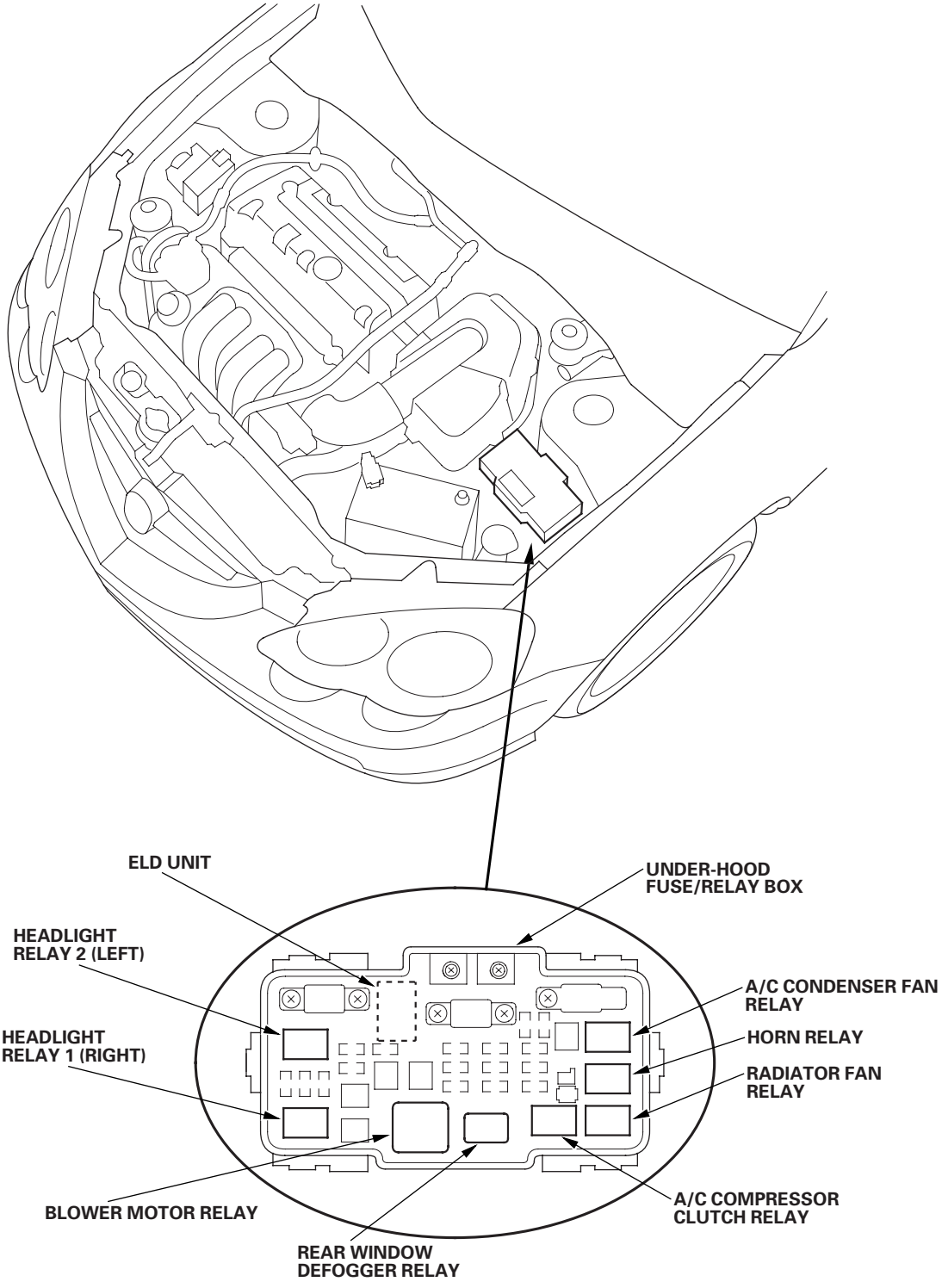

Relay and Control Unit Locations

Dashboard

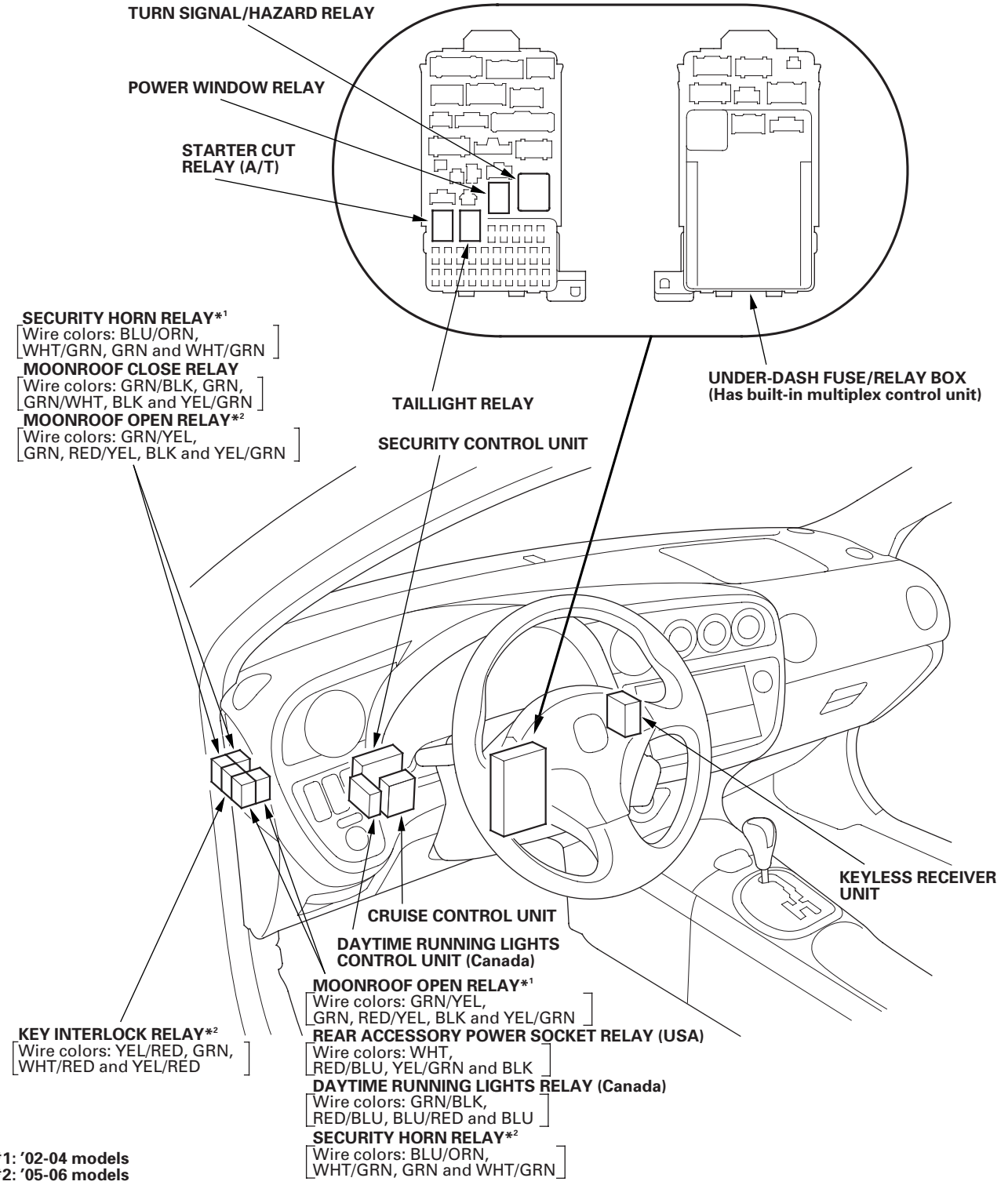

*1: '02-04 models
*2: '05-06 models

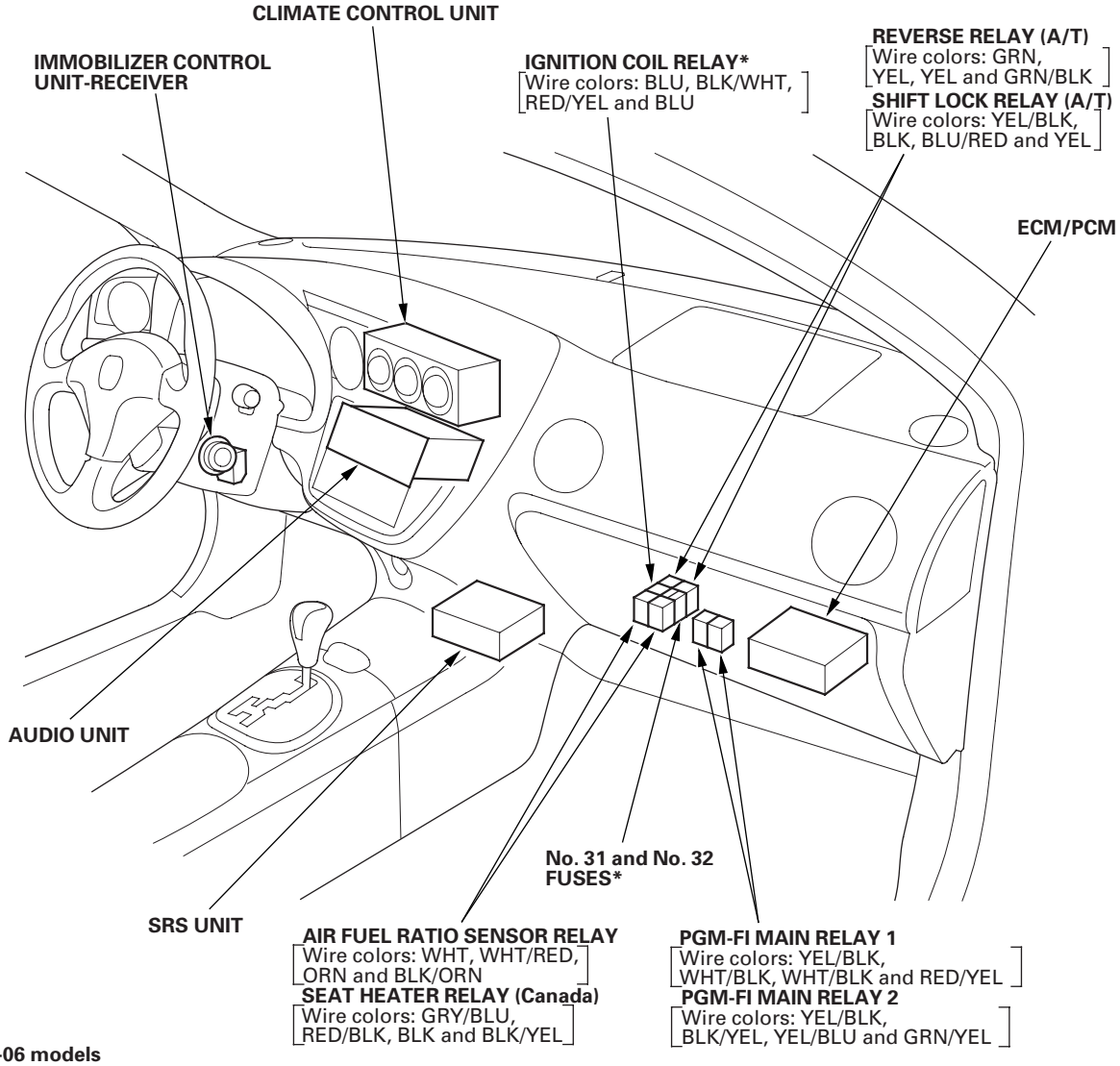
CLIMATE CONTROL UNIT
IMMOBILIZER CONTROL UNIT-RECEIVER
IGNITION COIL RELAY*
[Wire colors: BLU, BLK/WHT, RED/YEL and BLU]
REVERSE RELAY (A/T)
[Wire colors: GRN, YEL, YEL and GRN/BLK]
SHIFT LOCK RELAY (A/T)
[Wire colors: YEL/BLK, BLK, BLU/RED and YEL]
ECM/PCM
AUDIO UNIT
SRS UNIT
No. 31 and No. 32 FUSES*
AIR FUEL RATIO SENSOR RELAY
[Wire colors: WHT, WHT/RED, ORN and BLK/ORN]
SEAT HEATER RELAY (Canada)
[Wire colors: GRY/BLU, RED/BLK, BLK and BLK/YEL]
PGM-FI MAIN RELAY 1
[Wire colors: YEL/BLK, WHT/BLK, WHT/BLK and RED/YEL]
PGM-FI MAIN RELAY 2
[Wire colors: YEL/BLK, BLK/YEL, YEL/BLU and GRN/YEL]

*: '05-06 models

Door, Seat, and Cargo Area

DRIVER'S DOOR:

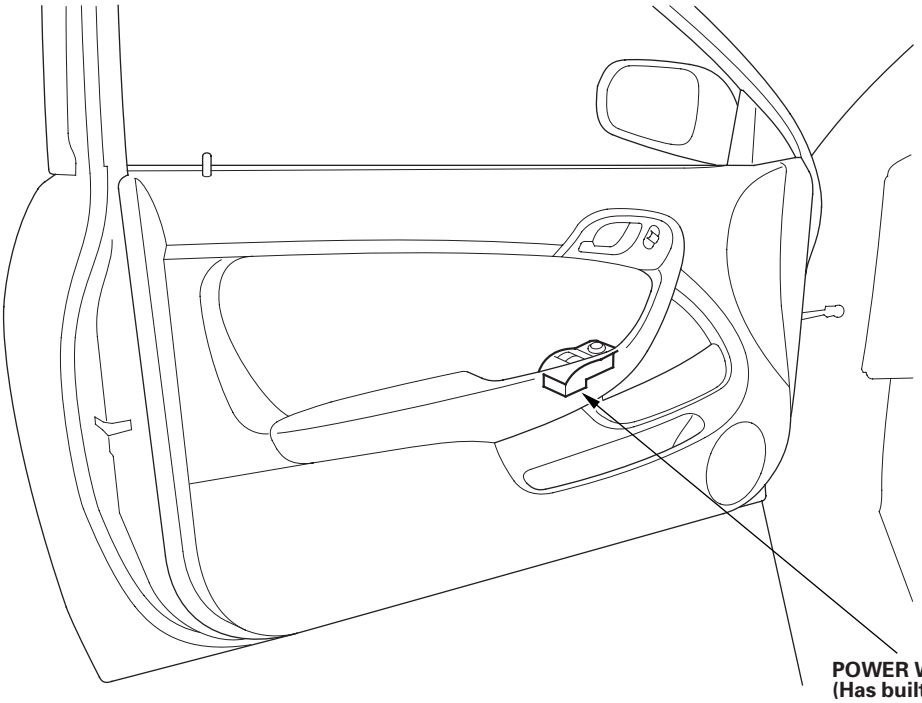

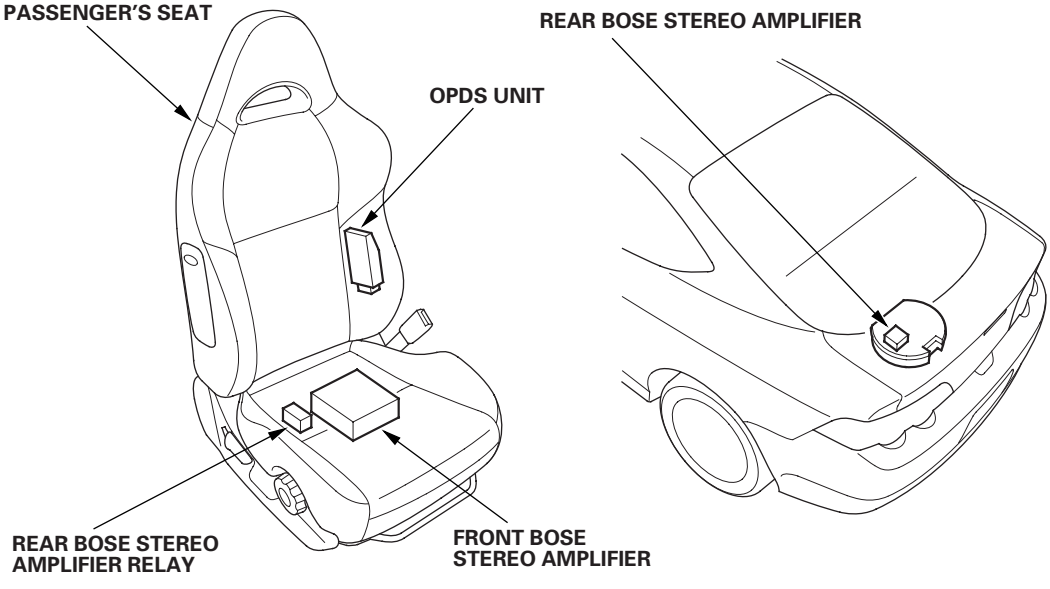

Connector Index

Identification numbers have been assigned to in-line connectors. The number is preceded by the letter ''C'' for connectors, ''G'' for ground terminals or ''T'' for non-ground terminals.

Harness	Location			
	Engine Compartment	Dashboard	Others (Floor, Door, Hatch, and Roof)	Notes
Battery ground cable	T3, (—) G1			(see page 22-12)
Engine ground cable	T4 G2			(see page 22-12)
Starter subharness	C102 and C103 T1, T2, and (+) T101 and T102			(see page 22-13)
Engine wire harness	C101 through C105 G101			(see page 22-14)
Transmission range switch subharness (A/T)	C105			(see page 22-14)
Engine compartment wire harness (Right branch)	G201 and G202			(see page 22-18)
Engine compartment wire harness (Left branch)	G301 and G302			(see page 22-20)
Engine compartment wire harness (Dashboard)		C483	C401, C402, C403, C501, C502	(see page 22-24)
Dashboard wire harness (Left branch)	C101	C404, C451, C452, C551, C552 G401		(see page 22-26)
Dashboard wire harness (Right branch)		C405, C481, C482, C571 G402, G403	C401, C402, C403, C503, C504, C505 G404	(see page 22-30)
Wiper subharness		C451 and C452 G451		(see page 22-32)
Floor wire harness (Front branch)			C501 through C505 C801 *1, C851 *2 G501	(see page 22-34)
Floor wire harness (Rear branch)			C601, C651 *3, C701, C702 G502	(see page 22-36)
Fuel subharness *3			C651 *3	(see page 22-38)
Rear wire harness *3			C601, C602 G601	(see page 22-40)
Rear wire harness *4			C601, C602 G601	(see page 22-42)
License plate light subharness *3			C602	(see page 22-40)
License plate light subharness *4			C602	(see page 22-42)
Rear window defogger wire harness *4			C751 *3	(see page 22-42)
Hatch wire harness			C701, C702, C751 *3 G701, G702	(see page 22-44)
Roof wire harness		C404		(see page 22-46)
Front impact sensor harness		C405		(see page 22-48)
OPDS unit harness			C851	(see page 22-48)
Driver's door wire harness		C551, C552		(see page 22-50)
Passenger's door wire harness		C571		(see page 22-51)
A/C wire harness		C481, C482, C483		(see page 22-52)
Passenger's seat subharness *1			C801 *1, C851 *1	(see page 22-53)

* 1: With BOSE Sound System
* 2: Without BOSE Sound System
* 3: '02-04 models
* 4: '05-06 models

Connector to Harness Index

Battery Ground Cable

Connector or Terminal	Ref	Cavities	Location	Connects to	Notes
T3	3		Left side of engine compartment		
G1	1		Left side of engine compartment	Body ground via battery ground cable	
(—)	2		Battery	Battery negative terminal	

Engine Ground Cable

Connector or Terminal	Ref	Cavities	Location	Connects to	Notes
T4	5		Right side of engine compartment		
G2	4		Right side of engine compartment	Body ground via engine ground cable	

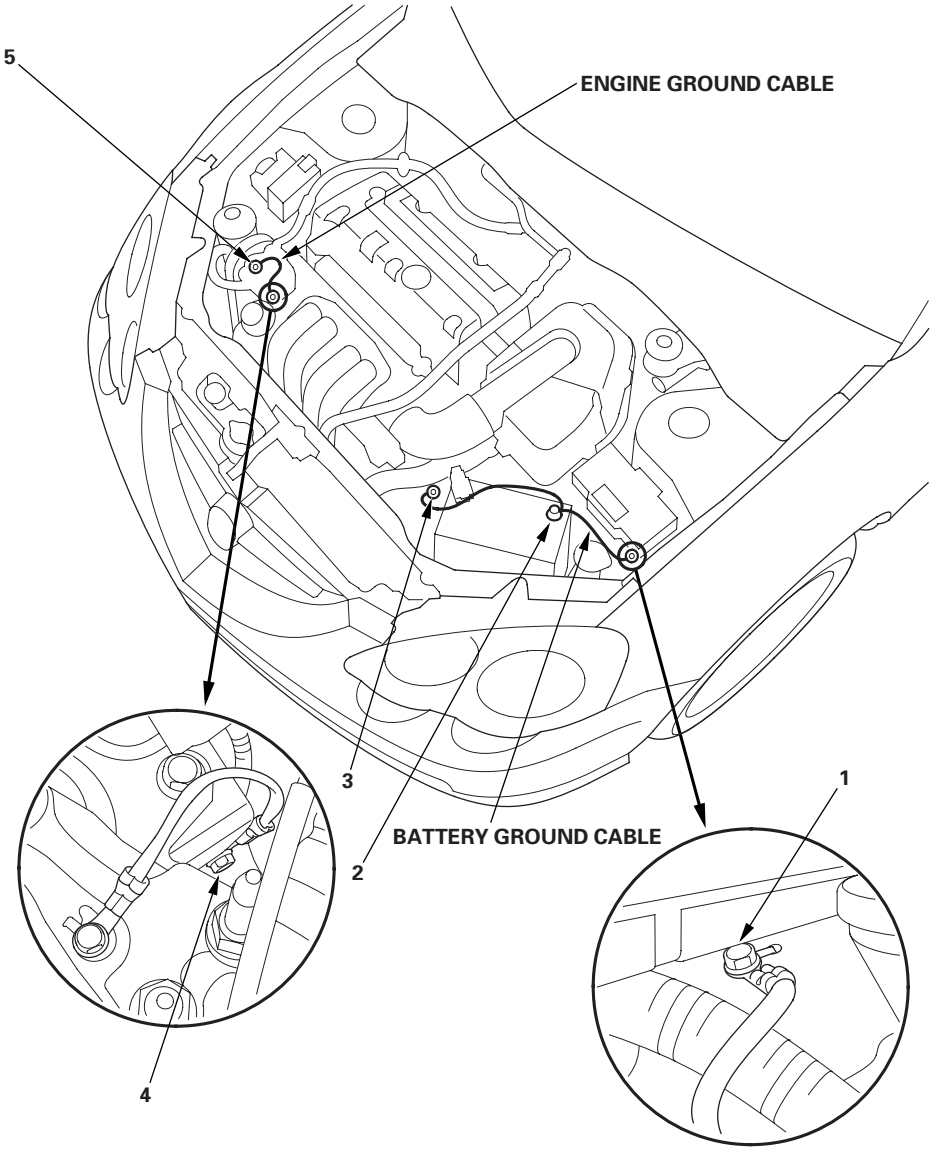

Starter Subharness

Connector or Terminal	Ref	Cavities	Location	Connects to	Notes
Alternator	9	4	Right side of engine compartment		
IMT (IMRC) valve position sensor	11	3	Right side of engine		Except Type-S
Knock sensor	8	1	Front of engine		
Starter solenoid	7	1	Middle of engine compartment		Type-S
C102	6	6	Front of engine compartment	Engine wire harness (see page 22-14)	Type-S
C102	6	8	Front of engine compartment	Engine wire harness (see page 22-14)	Except Type-S
C103	5	1	Front of engine compartment	Engine wire harness (see page 22-14)	Type-S
T1	1		Left side of engine compartment	Under-hood fuse/relay box	
T2	4		Middle of engine compartment	Starter motor	
T101	2		Under-hood fuse/relay box		
T102	10		Alternator		
(+)	3		Battery	Battery positive terminal	

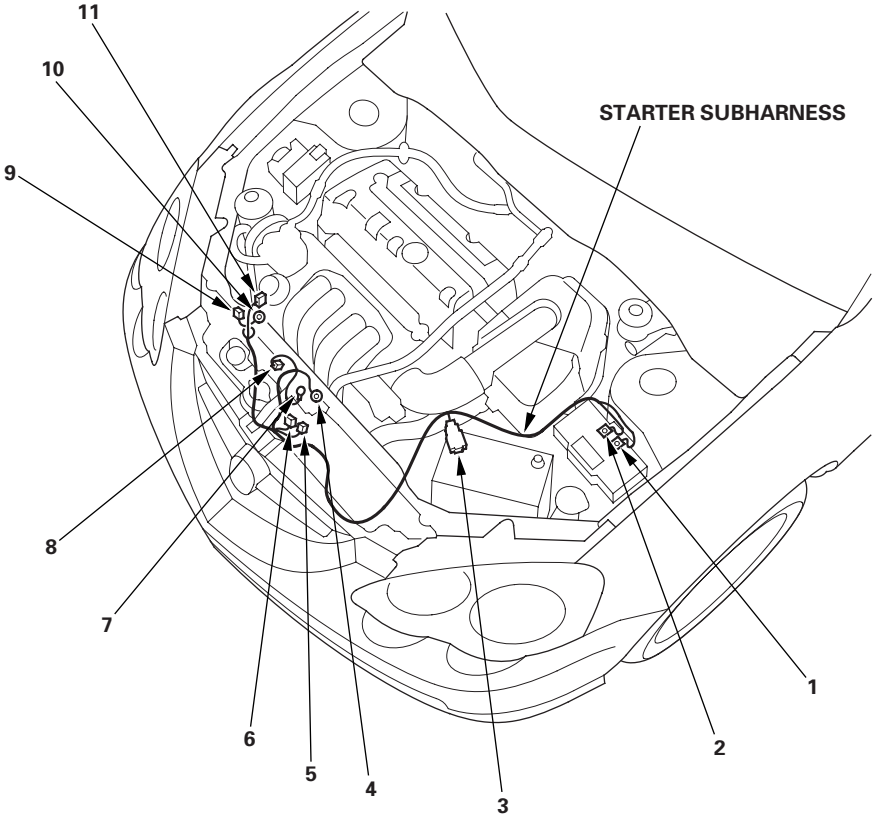

Connector to Harness Index (cont'd)

Engine Wire Harness

Connector or Terminal	Ref	Cavities	Location	Connects to	Notes
A/T clutch pressure control solenoid valve A	22	2	Transmission housing		A/T
A/T clutch pressure control solenoid valve B	24	2	Transmission housing		A/T
A/T clutch pressure control solenoid valve C	23	2	Transmission housing		A/T
Back-up light switch	27	2	Transmission housing		M/T
Camshaft position (CMP) sensor A	12	3	Left side of engine		
Camshaft position (CMP) sensor B	11	3	Left side of engine		
CKP sensor	42	3	Right side of engine		
ECM/PCM connector A	7	31	Under glove box		
ECM/PCM connector B	6	25	Under glove box		
Engine coolant temperature (ECT) sensor	14	2	Left side of engine		
Engine oil pressure switch	44	1	Right side of engine		
EVAP canister purge valve	32	2	Left side of intake manifold		
Idle air control (IAC) valve	30	3	Left side of intake manifold		
Ignition coil No. 1	3	3	Middle of engine compartment		
Ignition coil No. 2	8	3	Middle of engine compartment		
Ignition coil No. 3	9	3	Middle of engine compartment		
Ignition coil No. 4	10	3	Middle of engine compartment		
IMT (IMRC) solenoid valve	41	2	Right side of intake manifold		Except Type-S
Injector No. 1	40	2	Middle of engine compartment		
Injector No. 2	39	2	Middle of engine compartment		
Injector No. 3	37	2	Middle of engine compartment		
Injector No. 4	36	2	Middle of engine compartment		
Input shaft (mainshaft) speed sensor	18	3	Transmission housing		A/T
Intake air temperature (IAT) sensor	29	2	Intake air duct		
MAP sensor	33	3	Left side of intake manifold		
Output shaft (countershaft) speed sensor	17	3	Transmission housing		A/T
Output shaft (countershaft) speed sensor	17	3	Transmission housing		M/T *2
PCM connector C	5	22	Under glove box		A/T
Reverse lockout solenoid valve	16	2	Transmission housing		Type-S
Starter solenoid	31	1	Under intake manifold		Except Type-S
Throttle position (TP) sensor	28	3	Left side of intake manifold		
Vehicle speed sensor (VSS)	13	3	Transmission housing		M/T *1
VTC oil control solenoid valve	43	2	Right side of engine		
Rocker arm oil pressure switch (VTEC oil pressure switch)	2	2	Right side of engine		
Rocker arm oil control solenoid (VTEC solenoid valve)	1	2	Right side of engine		
2nd clutch transmission fluid pressure switch	26	1	Transmission housing		A/T
3rd clutch transmission fluid pressure switch	21	1	Transmission housing		A/T

* 1: '02-04 models
* 2: '05-06 models

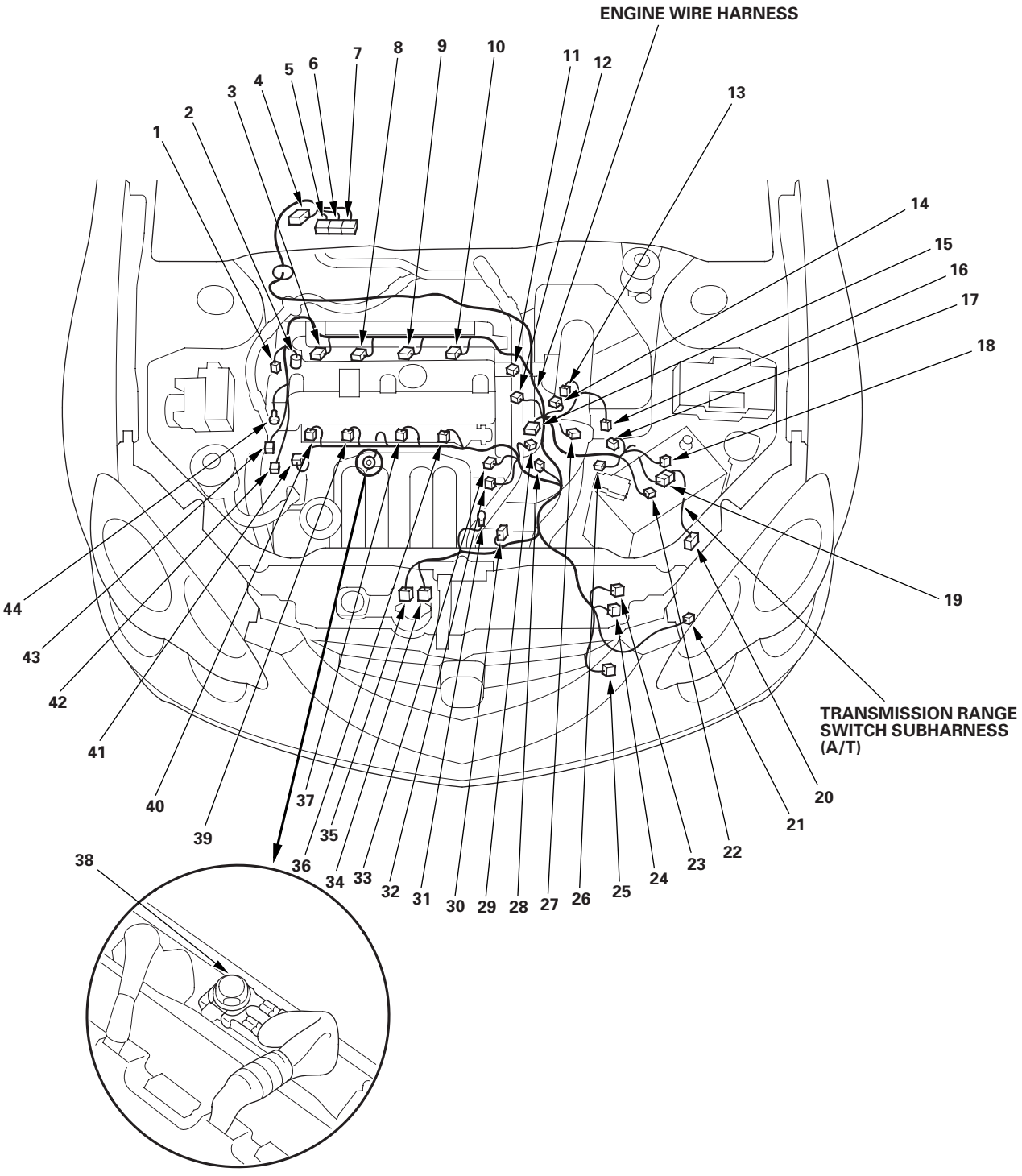
ENGINE WIRE HARNESS
TRANSMISSION RANGE SWITCH SUBHARNESS (A/T)
1
2
3
4
5
6
7
8
9
10
11
12
13
14
15
16
17
18
19
20
21
22
23
24
25
26
27
28
29
30
31
32
33
34
35
36
37
38
39
40
41
42
43
44

(cont'd)

Connector to Harness Index (cont'd)

Engine Wire Harness (cont'd)

Connector or Terminal	Ref	Cavities	Location	Connects to	Notes
C101	4	20	Under right side of dash	Dashboard wire harness (see page 22-30)	
C102	35	6	Front of engine compartment	Starter subharness (see page 22-13)	Type-S
C102	35	8	Front of engine compartment	Starter subharness (see page 22-13)	
C103	34	1	Front of engine compartment	Starter subharness (see page 22-13)	Type-S
C104 (Junction connector)	15	24	Under right side of dash	Junction connector	
C105	19	10	Transmission housing	Transmission range switch subharness	A/T
C108	25	8	Transmission housing	ATF temperature sensor and shift solenoid valves	A/T
G101	38		Cylinder head cover	Engine ground, via engine wire harness	

Transmission Range Switch Subharness (A/T)

Connector or Terminal	Ref	Cavities	Location	Connects to	Notes
Transmission range switch	20	10	Transmission housing		
C105	19	10	Transmission housing	Engine wire harness	

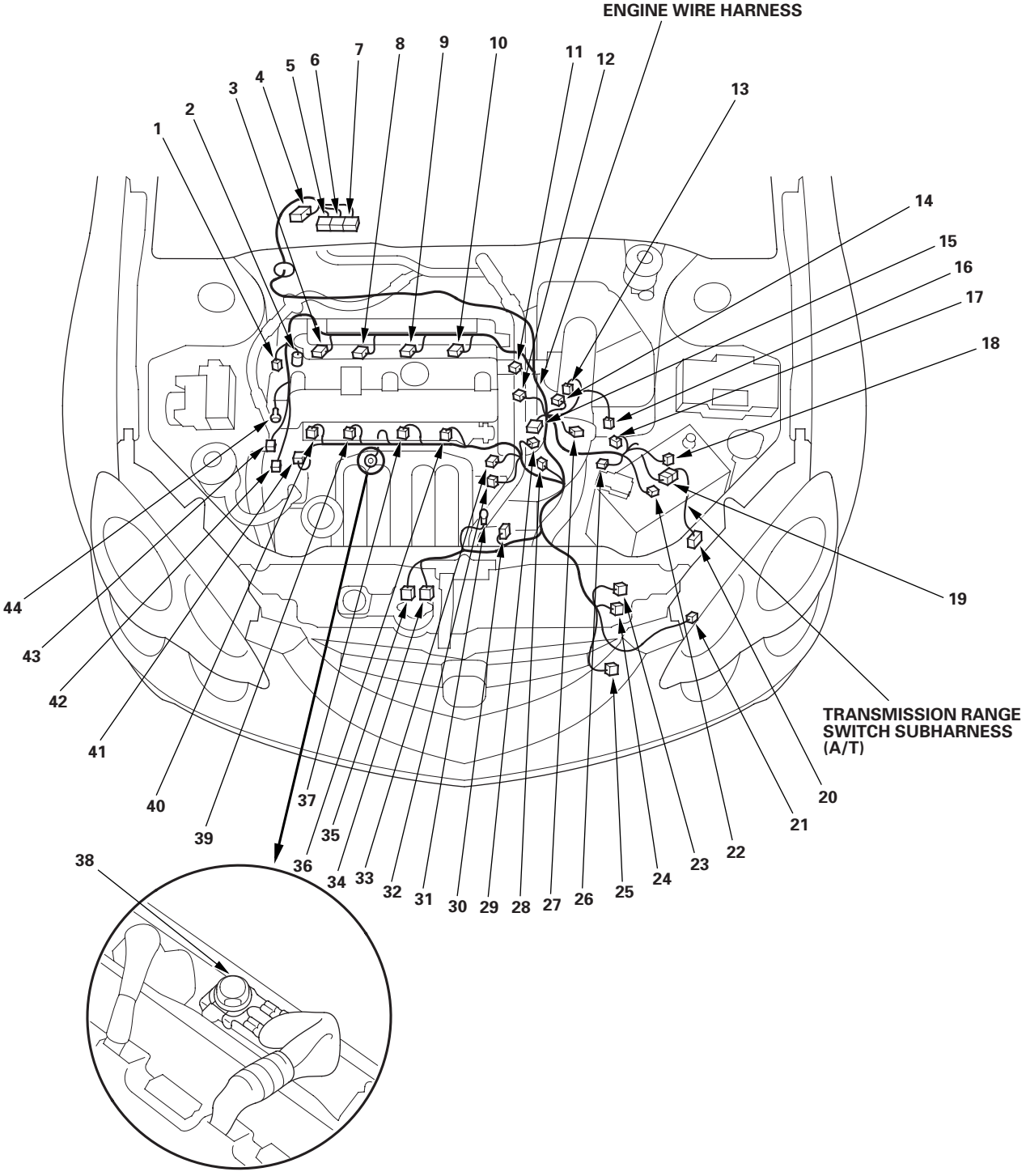
ENGINE WIRE HARNESS
TRANSMISSION RANGE SWITCH SUBHARNESS (A/T)
1
2
3
4
5
6
7
8
9
10
11
12
13
14
15
16
17
18
19
20
21
22
23
24
25
26
27
28
29
30
31
32
33
34
35
36
37
38
39
40
41
42
43
44

Connector to Harness Index (cont'd)

Engine Compartment Wire Harness ('02-04 models) (Right branch)

Connector or Terminal	Ref	Cavities	Location	Connects to	Notes
ABS modulator-control unit	1	25	Right side of engine compartment		
A/C compressor	10	1	Front of engine compartment		
A/C condenser fan motor	12	2	Front of engine compartment		
Hood switch (security)	13	2	Front of engine compartment		
Horn (security)	6	1	Behind front bumper		
Radiator fan switch	11	2	Front of engine compartment		
Right front wheel sensor	3	2	Right side of engine compartment		
Right front parking light	2	2	Behind right headlight		
Right front turn signal light	8	2	Behind right headlight		
Right headlight (high beam)	9	3	Behind right headlight		
Right headlight (low beam)	7	3	Behind right headlight		
G201	5		Behind right side of front bumper	Body ground via engine compartment wire harness	
G202	4		Behind right side of front bumper	Body ground via engine compartment wire harness	

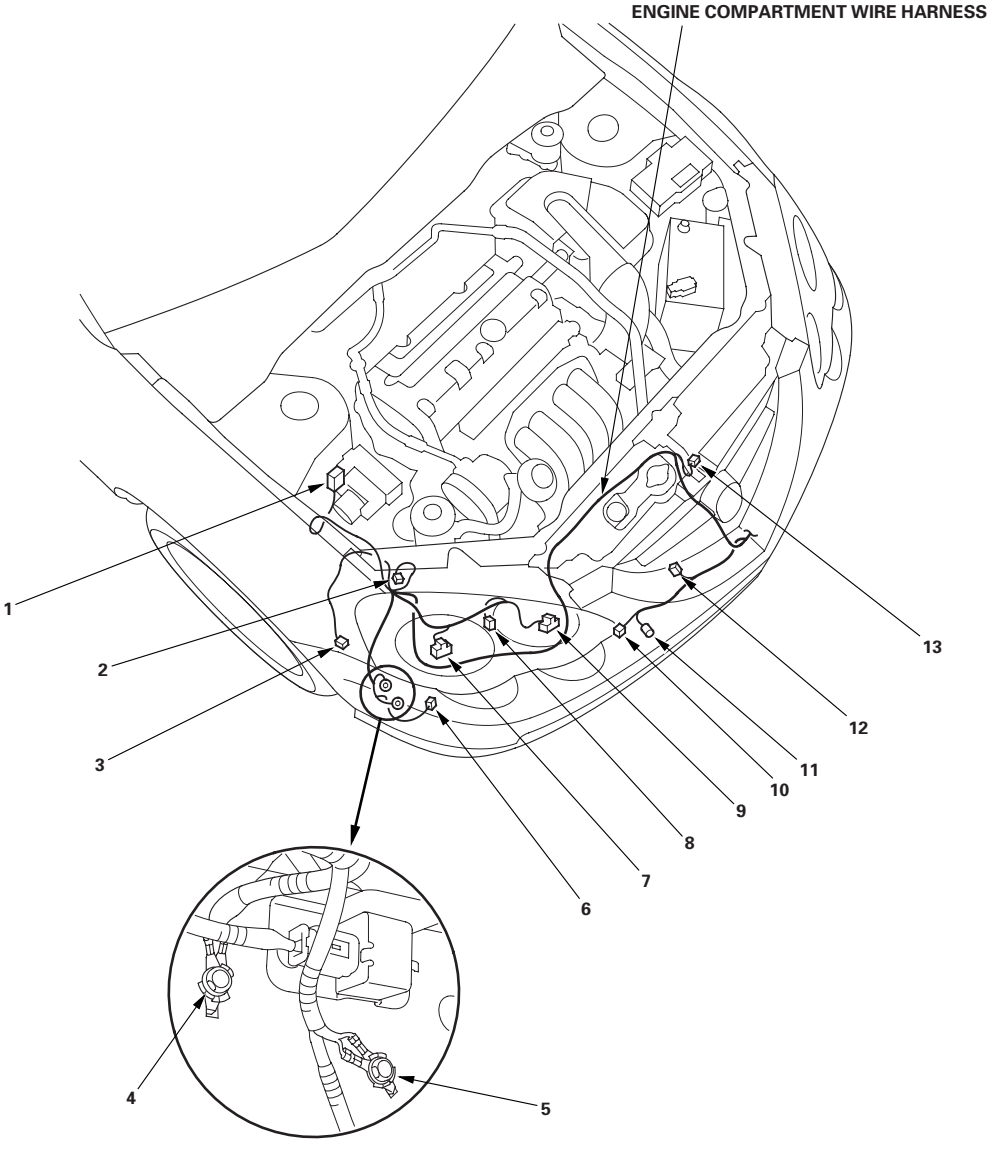

Engine Compartment Wire Harness ('05-06 models) (Right branch)

Connector or Terminal	Ref	Cavities	Location	Connects to	Notes
ABS modulator-control unit	1	25	Right side of engine compartment		
A/C compressor	11	1	Front of engine compartment		
A/C condenser fan motor	13	2	Front of engine compartment		
Hood switch (security)	14	2	Front of engine compartment		
Horn (security)	5	1	Behind front bumper		
Radiator fan switch	12	2	Front of engine compartment		
Right front wheel sensor	2	2	Right side of engine compartment		
Right front parking light	9	2	Behind right headlight		
Right front side marker light	7	2	Behind right headlight		
Right front turn signal light	10	2	Behind right headlight		
Right headlight (high beam)	8	2	Behind right headlight		
Right headlight (low beam)	6	3	Behind right headlight		
G201	4		Behind right side of front bumper	Body ground via engine compartment wire harness	
G202	3		Behind right side of front bumper	Body ground via engine compartment wire harness	

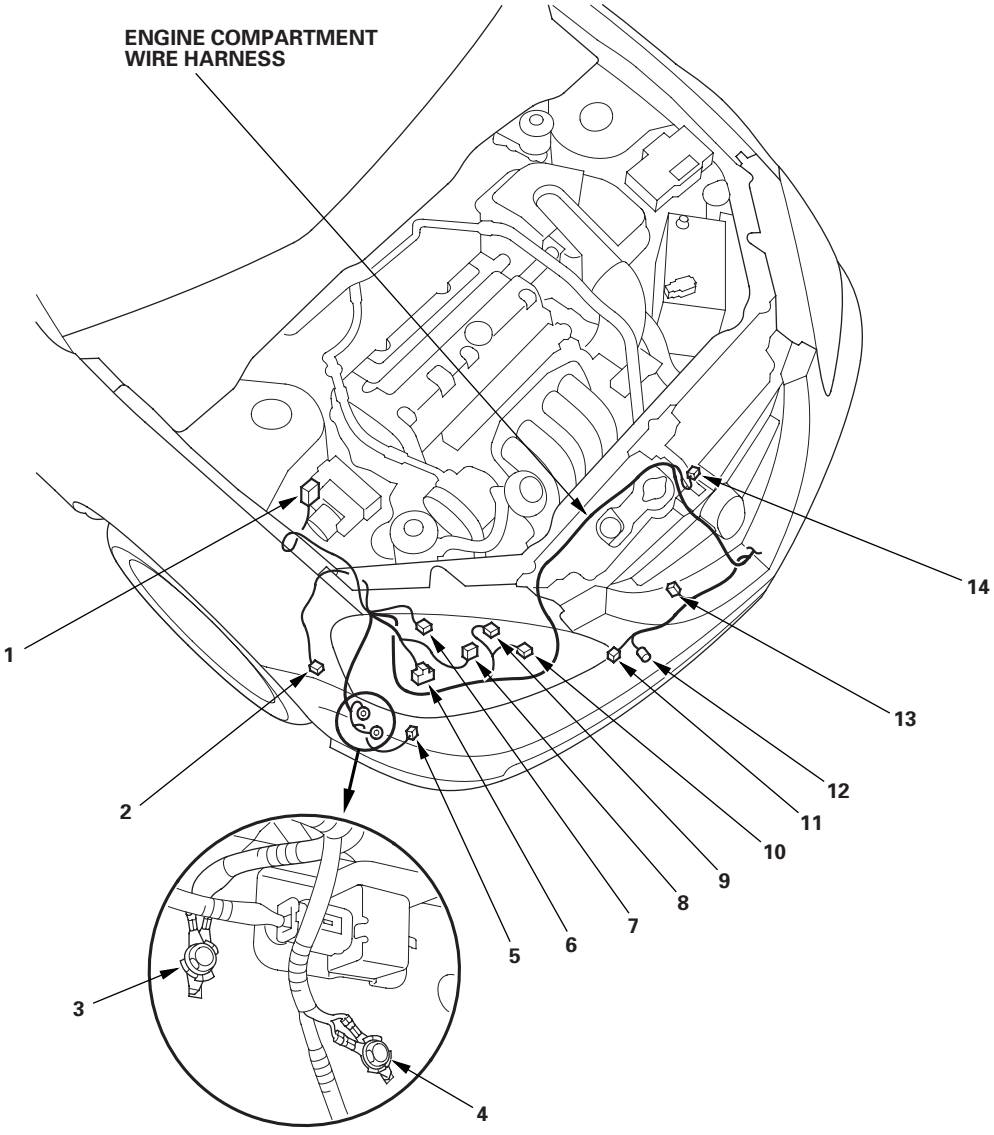

Connector to Harness Index (cont'd)

Engine Compartment Wire Harness ('02-04 models) (Left branch) (cont'd)

Connector or Terminal	Ref	Cavities	Location	Connects to	Notes
A/C pressure switch	3	2	Front of engine compartment		
A/F sensor	16	4	Below the backside of engine		
ELD unit	18	3	Under-hood fuse/relay box		
Horn (Low)	5	1	Behind front bumper		
Left front wheel sensor	14	2	Left side of engine compartment		
Left front impact sensor	10	2	Left side of engine compartment		
Left front parking light	11	2	Behind left headlight		
Left front turn signal light	24	2	Behind left headlight		
Left headlight (high beam)	23	3	Behind left headlight		
Left headlight (low beam)	25	3	Behind left headlight		
Optional connector (for fog light)	12	1	Left side of engine compartment		
Outside air temperature sensor	4	2	Behind front bumper		
Radiator fan motor	1	2	Front of engine compartment		
Rear window washer motor	9	2	Behind left side of front bumper		
Secondary heated oxygen sensor (SHO2S)	15	4	Left side of engine compartment		
Test tachometer connector	13	2	Left side of engine compartment		
Under-hood fuse/relay box connector A (see page 22-54)	20	2	Under-hood fuse/relay box		
Under-hood fuse/relay box connector B (see page 22-54)	22	12	Under-hood fuse/relay box		
Under-hood fuse/relay box connector C (see page 22-54)	17	7	Under-hood fuse/relay box		
Under-hood fuse/relay box connector D (see page 22-54)	19	14	Under-hood fuse/relay box		
Under-hood fuse/relay box connector E (see page 22-54)	21	5	Under-hood fuse/relay box		
Washer fluid level switch	6	2	Behind left side of front bumper		Canada
Windshield washer motor	8	2	Behind left side of front bumper		
G301	7		Left side of engine compartment	Body ground via engine compartment wire harness	
G302	2		Under the radiator	Body ground via engine compartment wire harness	

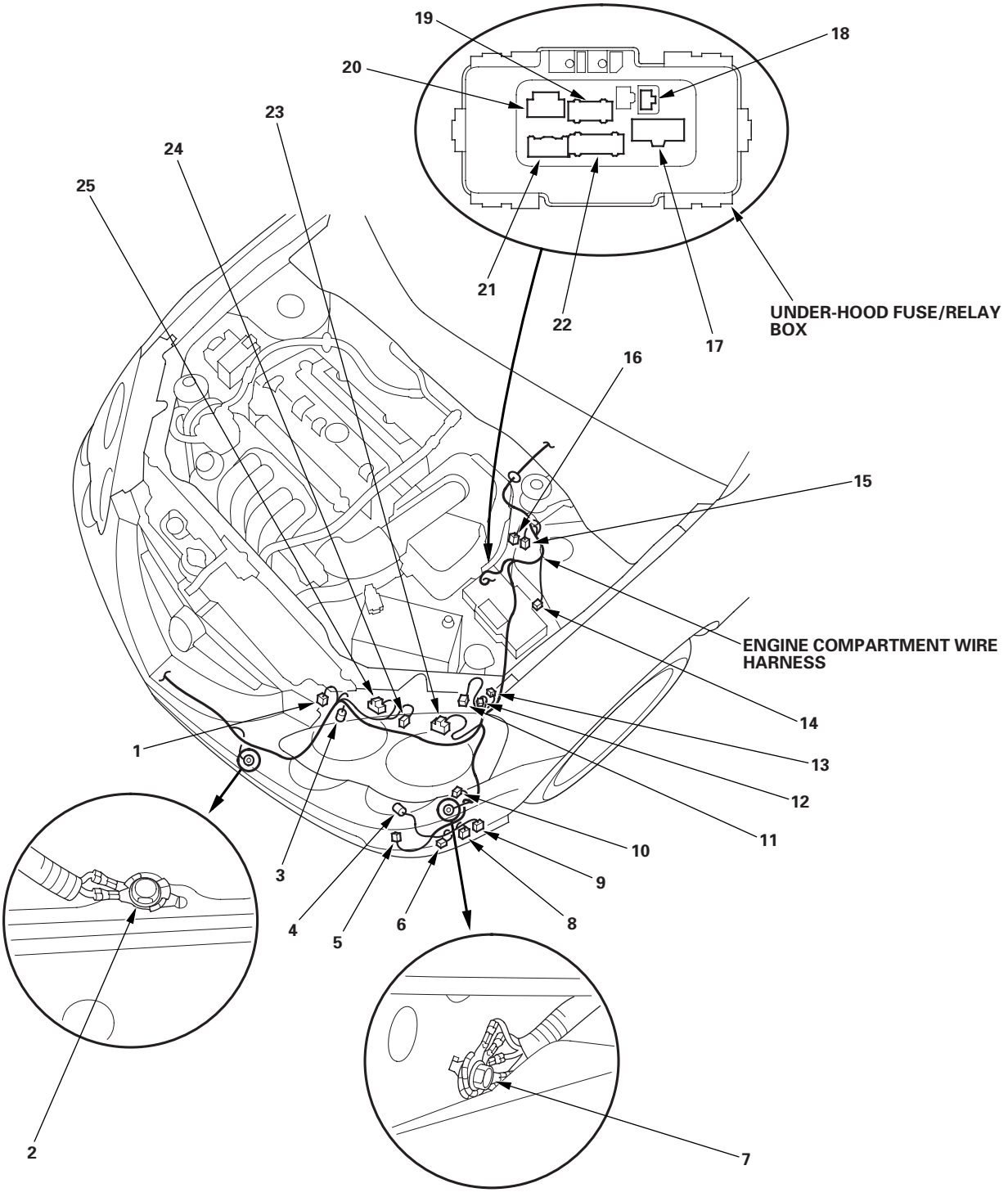
19
18
20
23
24
25
21
22
17
UNDER-HOOD FUSE/RELAY BOX
16
15
ENGINE COMPARTMENT WIRE HARNESS
14
13
12
11
10
9
8
1
3
4
5
6
2
7

Connector to Harness Index (cont'd)

Engine Compartment Wire Harness ('05-06 models) (Left branch) (cont'd)

Connector or Terminal	Ref	Cavities	Location	Connects to	Notes
A/C pressure switch	3	2	Front of engine compartment		
A/F sensor	18	4	Below the backside of engine		
ELD unit	20	3	Under-hood fuse/relay box		
Horn (Low)	7	1	Behind front bumper		
Left front wheel sensor	16	2	Left side of engine compartment		
Left front impact sensor	12	2	Left side of engine compartment		
Left front parking light	5	2	Behind left headlight		
Left front side marker light	25	2	Left headlight		
Left front turn signal light	4	2	Behind left headlight		
Left headlight (high beam)	13	2	Behind left headlight		
Left headlight (low beam)	26	3	Behind left headlight		
Optional connector (for fog light)	14	1	Left side of engine compartment		
Outside air temperature sensor	6	2	Behind front bumper		
Radiator fan motor	1	2	Front of engine compartment		
Rear window washer motor	11	2	Behind left side of front bumper		
Secondary heated oxygen sensor (SHO2S)	17	4	Left side of engine compartment		
Test tachometer connector	15	2	Left side of engine compartment		
Under-hood fuse/relay box connector A (see page 22-54)	22	2	Under-hood fuse/relay box		
Under-hood fuse/relay box connector B (see page 22-54)	24	12	Under-hood fuse/relay box		
Under-hood fuse/relay box connector C (see page 22-54)	19	7	Under-hood fuse/relay box		
Under-hood fuse/relay box connector D (see page 22-54)	21	14	Under-hood fuse/relay box		
Under-hood fuse/relay box connector E (see page 22-54)	23	5	Under-hood fuse/relay box		
Washer fluid level switch	8	2	Behind left side of front bumper		Canada
Windshield washer motor	10	2	Behind left side of front bumper		
G301	9		Left side of engine compartment	Body ground via engine compartment wire harness	
G302	2		Under the radiator	Body ground via engine compartment wire harness	

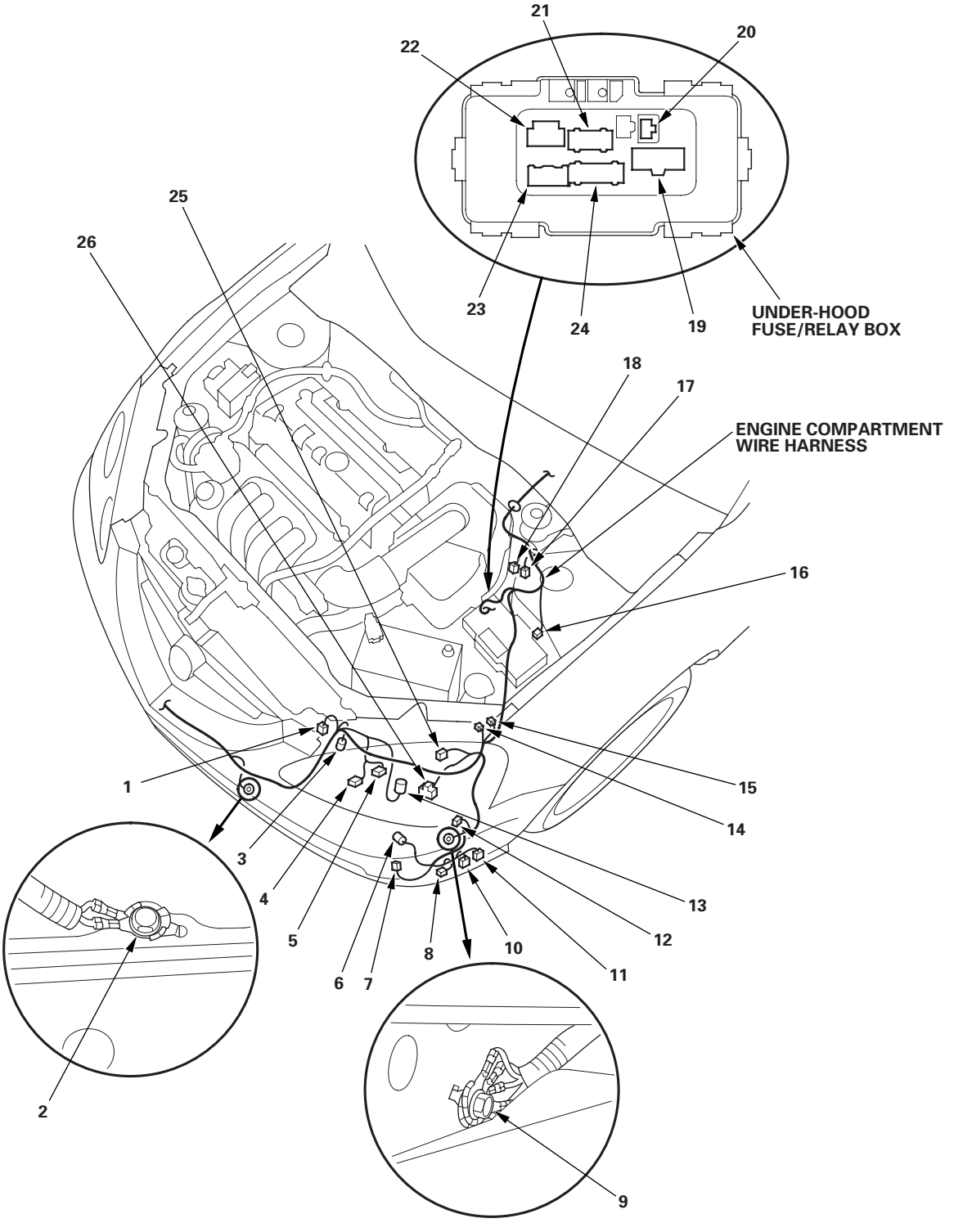
21
20
22
25
26
23
24
19
UNDER-HOOD
FUSE/RELAY BOX
18
17
ENGINE COMPARTMENT
WIRE HARNESS
16
1
15
14
3
4
13
5
12
8
10
6
7
11
2
9

Connector to Harness Index (cont'd)

Engine Compartment Wire Harness (Dashboard) (cont'd)

Connector or Terminal	Ref	Cavities	Location	Connects to	Notes
Optional connector (for fog light)	7	1	Under left side of dash		USA
Optional connector (for fog light)	7	2	Under left side of dash		Canada
Under-dash fuse/relay box connector F (see page 22-55)	12	12	Under left side of dash		
Under-dash fuse/relay box connector G (see page 22-55)	8	10	Under left side of dash		
Under-dash fuse/relay box connector H (see page 22-55)	9	3	Under left side of dash		
Under-dash fuse/relay box connector I (see page 22-55)	11	5	Under left side of dash		
Under-dash fuse/relay box connector J (see page 22-55)	10	8	Under left side of dash		
C401	1	24	Under middle of dash	Dashboard wire harness (see page 22-26)	
C402	4	12	Under middle of dash	Dashboard wire harness (see page 22-26)	
C403	5	4	Under middle of dash	Dashboard wire harness (see page 22-26)	
C483	6	1	Under middle of dash	A/C wire harness (see page 22-52)	
C501	3	6	Under middle of dash	Floor wire harness (see page 22-34)	
C502	2	1	Under middle of dash	Floor wire harness (see page 22-34)	

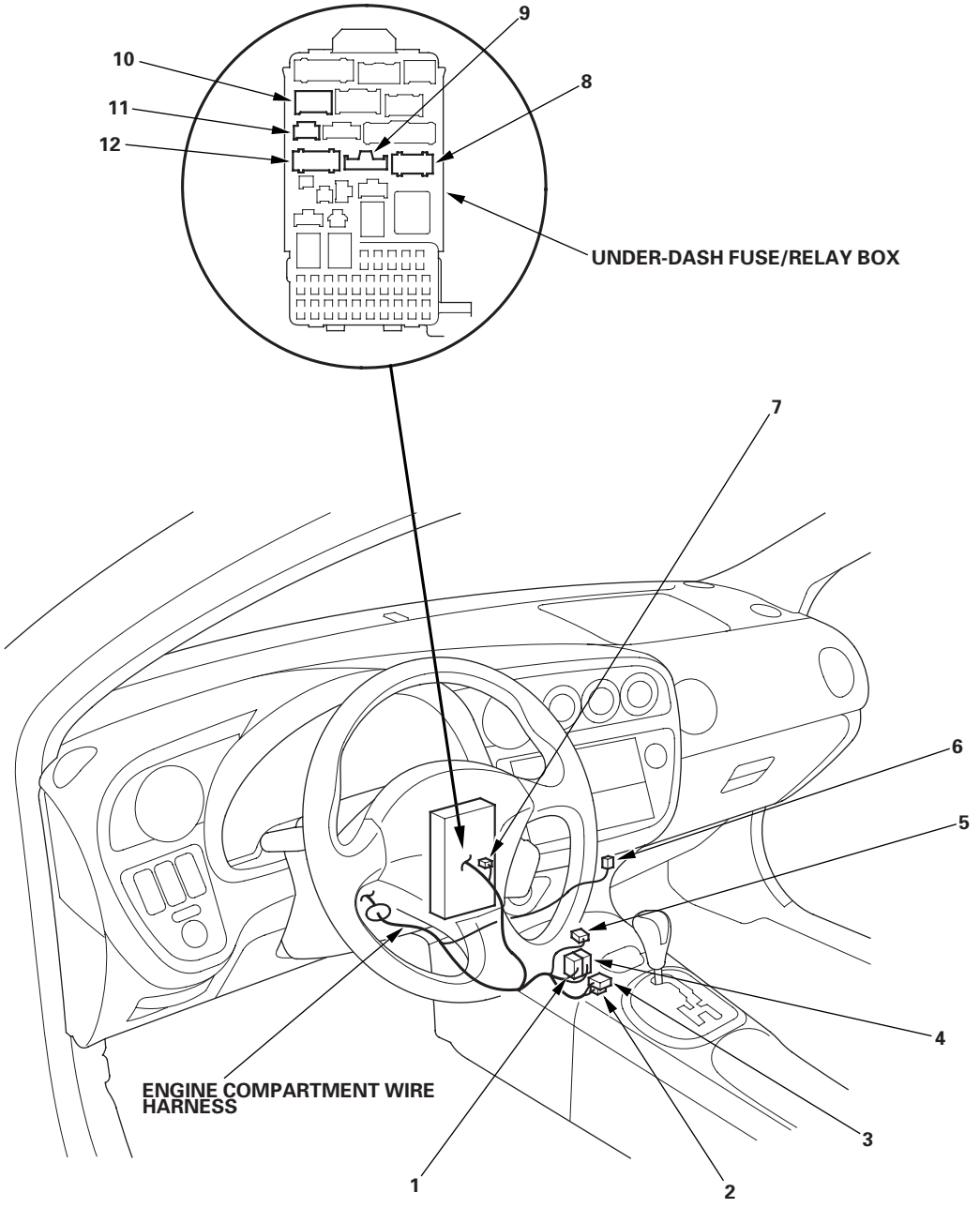
9
10
8
11
12
UNDER-DASH FUSE/RELAY BOX
7
6
5
4
ENGINE COMPARTMENT WIRE HARNESS
3
1
2

Connector to Harness Index (cont'd)

Dashboard Wire Harness (Left branch)

Connector or Terminal	Ref	Cavities	Location	Connects to	Notes
Beverage holder light	16	2	Under middle of dash		
Brake pedal position switch	37	4	Under left side of dash		
Cable reel connector A	28	4	In steering column cover	Driver's airbag first and second inflators	
Cable reel connector B	13	5	In steering column cover		
Clutch pedal position switch	38	2	Under left side of dash		Cruise
Clutch interlock switch	39	2	Under left side of dash		
Combination light switch	10	16	In steering column cover		
Cruise control unit	4	14	Under left side of dash		
Cruise control main switch	43	5	Left side of dash		
Data link connector (DLC)	17	16	Under middle of dash		
Daytime running lights control unit	1	14	Under left side of dash		Canada
Daytime running lights relay	56	4	Under left side of dash		Canada
Diode (for security system)	5	2	Under left side of dash		
Diode (for daytime running lights system)	40	2	Under left side of dash		Canada
Diode (for key interlock)	44	2	Under left side of dash		'05-06 models*
Front accessory power socket	18	2	Under middle of dash		
Gauge assembly connector A	7	22	Behind gauge		'02-04 models
Gauge assembly connector A	7	20	Behind gauge		'05-06 models
Gauge assembly connector B	9	18	Behind gauge		'02-04 models
Gauge assembly connector B	9	16	Behind gauge		'05-06 models
Ignition key switch/key light	26	6	In steering column cover		
Ignition switch	27	7	In steering column cover		
In-car temperature sensor	11	2	Under middle of dash		
Immobilizer control unit-receiver	25	7	In steering column cover		
Key interlock relay	53	5	Under left side of dash		'05-06 models*
Keyless receiver unit	12	5	Under middle of dash		
Left tweeter	51	2	Left side of dash		
Moonroof close relay	52	5	Under left side of dash		
Moonroof open relay	55	5	Under left side of dash		
Moonroof switch	42	6	Left side of dash		
Optional rear accessory power socket connector	45	2	Under left side of dash		Canada
Power mirror switch	41	13	Left side of dash		
Rear accessory power socket relay	56	4	Under left side of dash		USA
Seat heater switch	15	10	Under middle of dash		Canada
Security control unit connector A	2	20	Middle of dash		
Security control unit connector B	3	16	Under left side of dash		
Security horn relay	54	4	Under left side of dash		
Sunlight sensor	8	2	Under left side of dash		

*: A/T

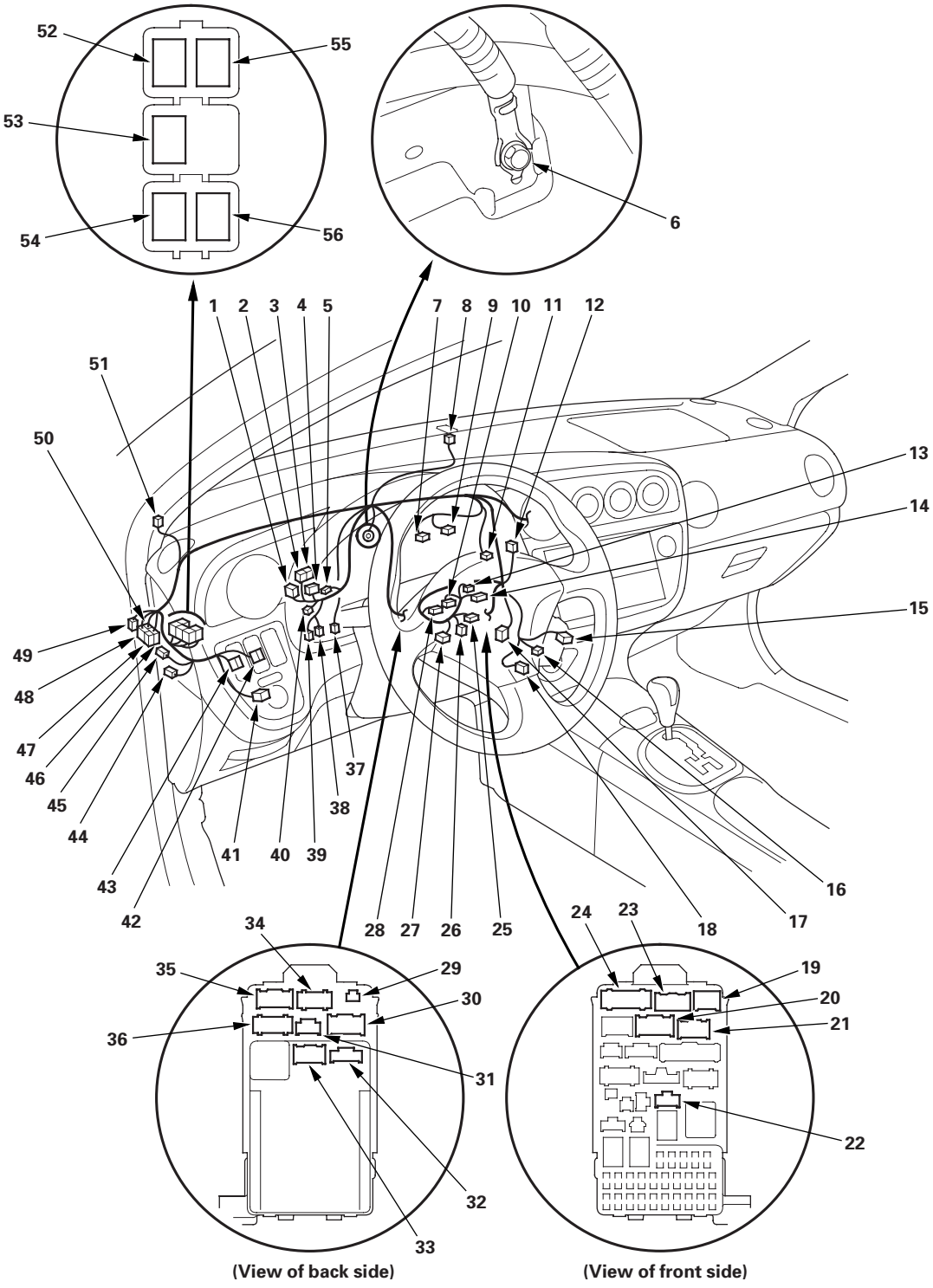
52
55
53
54
56
6
1
2
3
4
5
7
8
9
10
11
12
51
50
13
14
15
49
48
47
46
45
44
43
42
41
40
39
38
37
28
27
26
25
24
23
18
17
16
34
35
29
30
36
31
32
33
19
20
21
22
(View of back side)
(View of front side)

(cont'd)

Connector to Harness Index (cont'd)

Dashboard Wire Harness (Left branch) (cont'd)

Connector or Terminal	Ref	Cavities	Location	Connects to	Notes
Under-dash fuse/relay box connector A (see page 22-55)	23	5	Under-dash fuse/relay box		
Under-dash fuse/relay box connector B (see page 22-55)	19	6	Under-dash fuse/relay box		
Under-dash fuse/relay box connector C (see page 22-55)	24	14	Under-dash fuse/relay box		
Under-dash fuse/relay box connector D (see page 22-55)	20	12	Under-dash fuse/relay box		
Under-dash fuse/relay box connector E (see page 22-55)	21	13	Under-dash fuse/relay box		
Under-dash fuse/relay box connector K (see page 22-55)	35	17	Under-dash fuse/relay box		
Under-dash fuse/relay box connector L (see page 22-55)	34	10	Under-dash fuse/relay box		
Under-dash fuse/relay box connector M (see page 22-55)	36	12	Under-dash fuse/relay box		
Under-dash fuse/relay box connector N (see page 22-55)	31	6	Under-dash fuse/relay box		
Under-dash fuse/relay box connector O (see page 22-55)	30	12	Under-dash fuse/relay box		
Under-dash fuse/relay box connector R (see page 22-55)	22	6	Under-dash fuse/relay box		A/T
Under-dash fuse/relay box connector S (see page 22-55)	29	2	Under-dash fuse/relay box		
Under-dash fuse/relay box connector X (see page 22-55)	32	8	Under-dash fuse/relay box		
Under-dash fuse/relay box connector Y (see page 22-55)	33	13	Under-dash fuse/relay box		
Wiper/washer switch	14	14	In steering column cover		
C404	49	6	Under left side of dash	Roof wire harness (see page 22-46)	
C451	50	6	Under left side of dash	Wiper subharness (see page 22-32)	
C452	46	5	Under left side of dash	Wiper subharness (see page 22-32)	
C551	48	16	Under left side of dash	Driver's door wire harness (see page 22-50)	'02-04 models
C551	48	20	Under left side of dash	Driver's door wire harness (see page 22-50)	'05-06 models
C552	47	6	Under left side of dash	Driver's door wire harness (see page 22-50)	
G401	6		Under left side of dash	Body ground via dashboard wire harness	

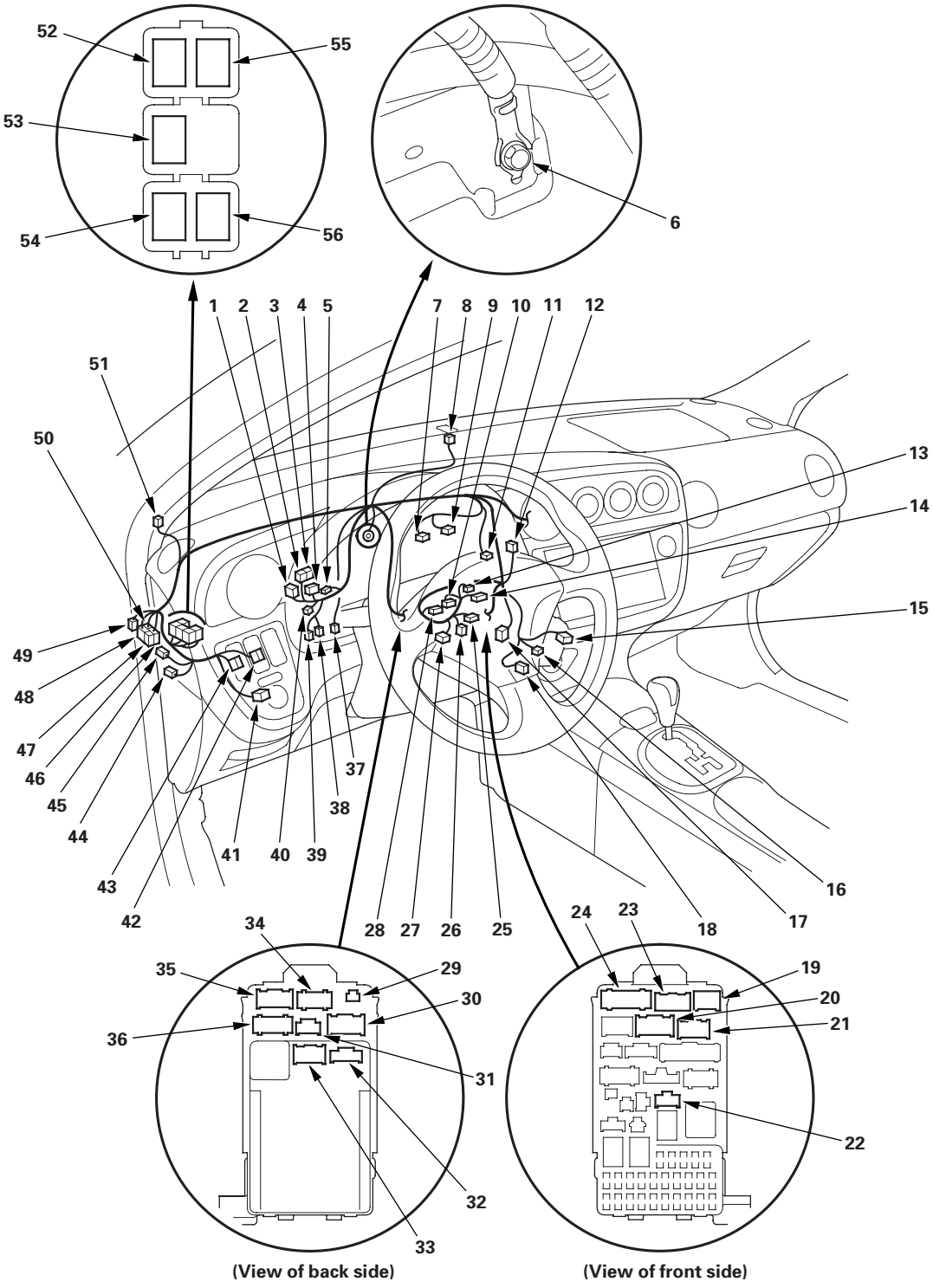
52
55
53
54
56
6
1
2
3
4
5
7
8
9
10
11
12
51
50
13
14
15
49
48
47
46
45
44
43
42
41
40
39
38
37
28
27
26
25
24
23
18
17
16
34
35
29
30
36
31
32
33
19
20
21
22
(View of back side)
(View of front side)

Connector to Harness Index (cont'd)

Dashboard Wire Harness (Right branch) (cont'd)

Connector or Terminal	Ref	Cavities	Location	Connects to	Notes
Airbag inflator (passenger's)	24	4	Under right side of dash		
Antenna sublead connector	35	1	Behind audio unit		'05-06 models
Audio unit	1	20	Behind audio unit		
A/F sensor relay	11	4	Behind glove box		
Climate control unit	2	30	Behind climate control unit		
ECM/PCM connector E	20	31	Under glove box		
Glove box light	14	2	Behind glove box		
Hazard warning switch	3	10	Middle of dash		
Ignition coil relay	6	4	Behind glove box		'05-06 models
No. 31 (15 A) (IG COIL) fuse	9	———	Behind glove box		'05-06 models
No. 32 (15 A) (IGP) fuse	10	———	Behind glove box		'05-06 models
Park pin switch and transmission gear selection switch	28	8	Under shift lever console panel		A/T
PCM connector D	19	17	Under glove box		A/T
PGM-FI main relay 1	12	4	Behind glove box		
PGM-FI main relay 2	13	4	Behind glove box		
Reverse relay	7	5	Behind glove box		A/T
Right tweeter	15	2	Right side of dash		
Seat heater relay	7	4	Behind glove box		Canada
Shift lock relay	8	4	Behind glove box		A/T
Shift lock solenoid	29	2	Under shift lever console panel		A/T
SRS unit connector A	31	18	Under middle of dash		
C101	18	20	Under middle of dash	Engine wire harness (see page 22-14)	
C401	32	24	Under middle of dash	Engine compartment wire harness (see page 22-18)	
C402	33	12	Under middle of dash	Engine compartment wire harness (see page 22-18)	
C403	34	4	Under middle of dash	Engine compartment wire harness (see page 22-18)	
C405	17	4	Under right side of dash	Front SRS sensor harness (see page 22-48)	
C481	22	21	Under right side of dash	A/C wire harness (see page 22-52)	
C482	23	1	Under right side of dash	A/C wire harness (see page 22-52)	
C503	27	21	Under middle of dash	Floor wire harness (see page 22-34)	'02-04 models
C503	27	20	Under middle of dash	Floor wire harness (see page 22-34)	'05-06 models
C504	26	4	Under middle of dash	Floor wire harness (see page 22-34)	
C505	25	14	Under middle of dash	Floor wire harness (see page 22-34)	BOSE
C505	25	2	Under middle of dash	Floor wire harness (see page 22-34)	'02-04 models*
C505	25	4	Under middle of dash	Floor wire harness (see page 22-34)	'05-06 models*
C571	16	18	Under right side of dash	Passenger's door wire harness (see page 22-51)	'02-04 models
C571	16	20	Under right side of dash	Passenger's door wire harness (see page 22-51)	'05-06 models
G402	21		Under right side of dash	Body ground via dashboard wire harness	
G403	4		Behind audio unit	Body ground via dashboard wire harness	
G404	30		Under shift lever console panel	Body ground via dashboard wire harness	

*: Without BOSE Stereo Sound System

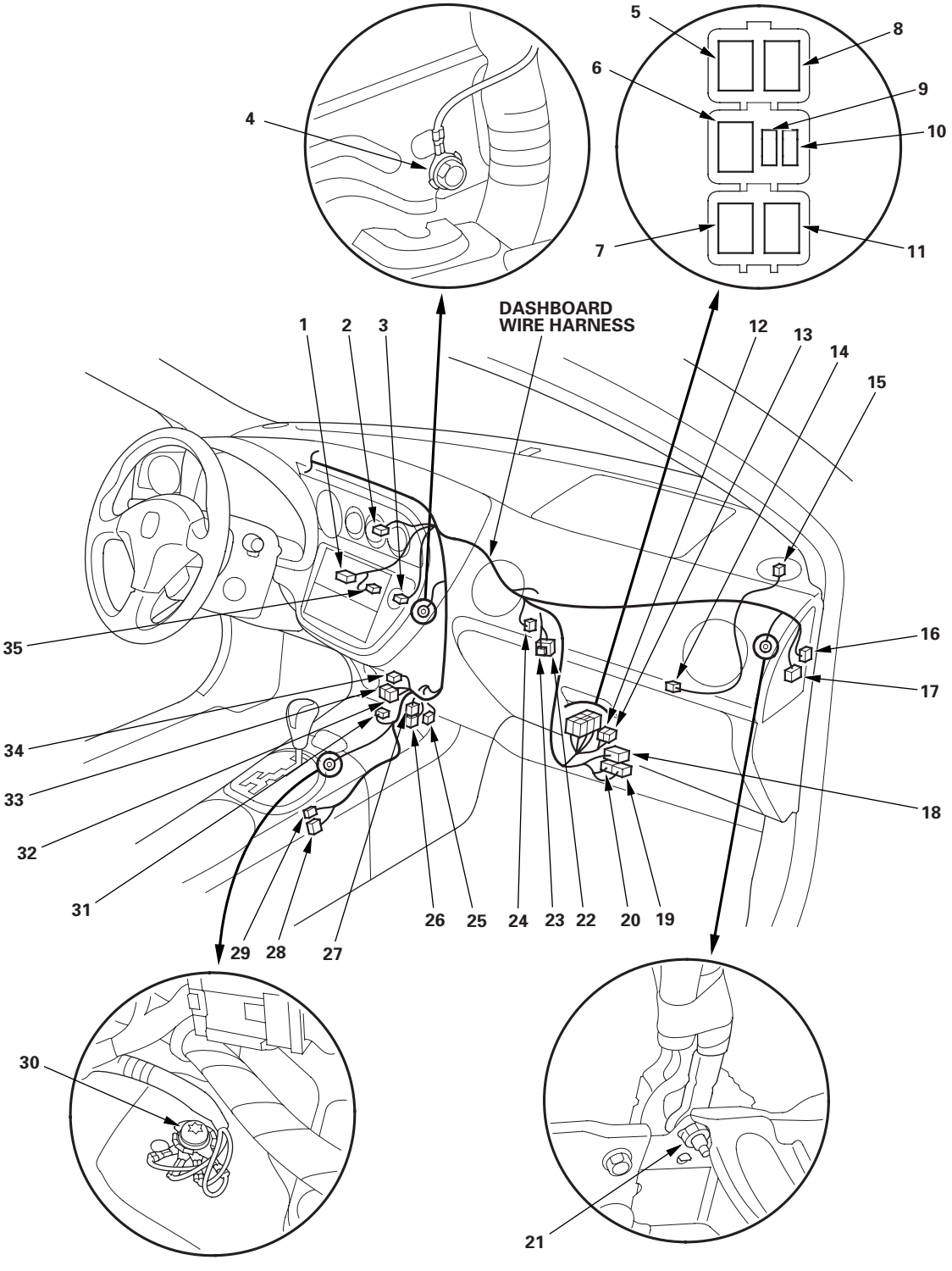
DASHBOARD
WIRE HARNESS
1
2
3
4
5
6
7
8
9
10
11
12
13
14
15
16
17
18
19
20
21
22
23
24
25
26
27
28
29
30
31
32
33
34
35

Connector to Harness Index (cont'd)

Wiper Subharness

Connector or Terminal	Ref	Cavities	Location	Connects to	Notes
Brake fluid level switch	6	2	Left side of engine compartment		
Cruise control actuator	4	4	Under right side of cowl cover		
Power steering pressure (PSP) switch	5	2	Left side of engine compartment		
Windshield wiper motor	7	5	Under left side of cowl cover		
C451	2	6	Under left side of dash	Dashboard wire harness (see page 22-26)	
C452	1	5	Under left side of dash	Dashboard wire harness (see page 22-26)	
G451	3		Under left side of dash	Body ground via wiper subharness	

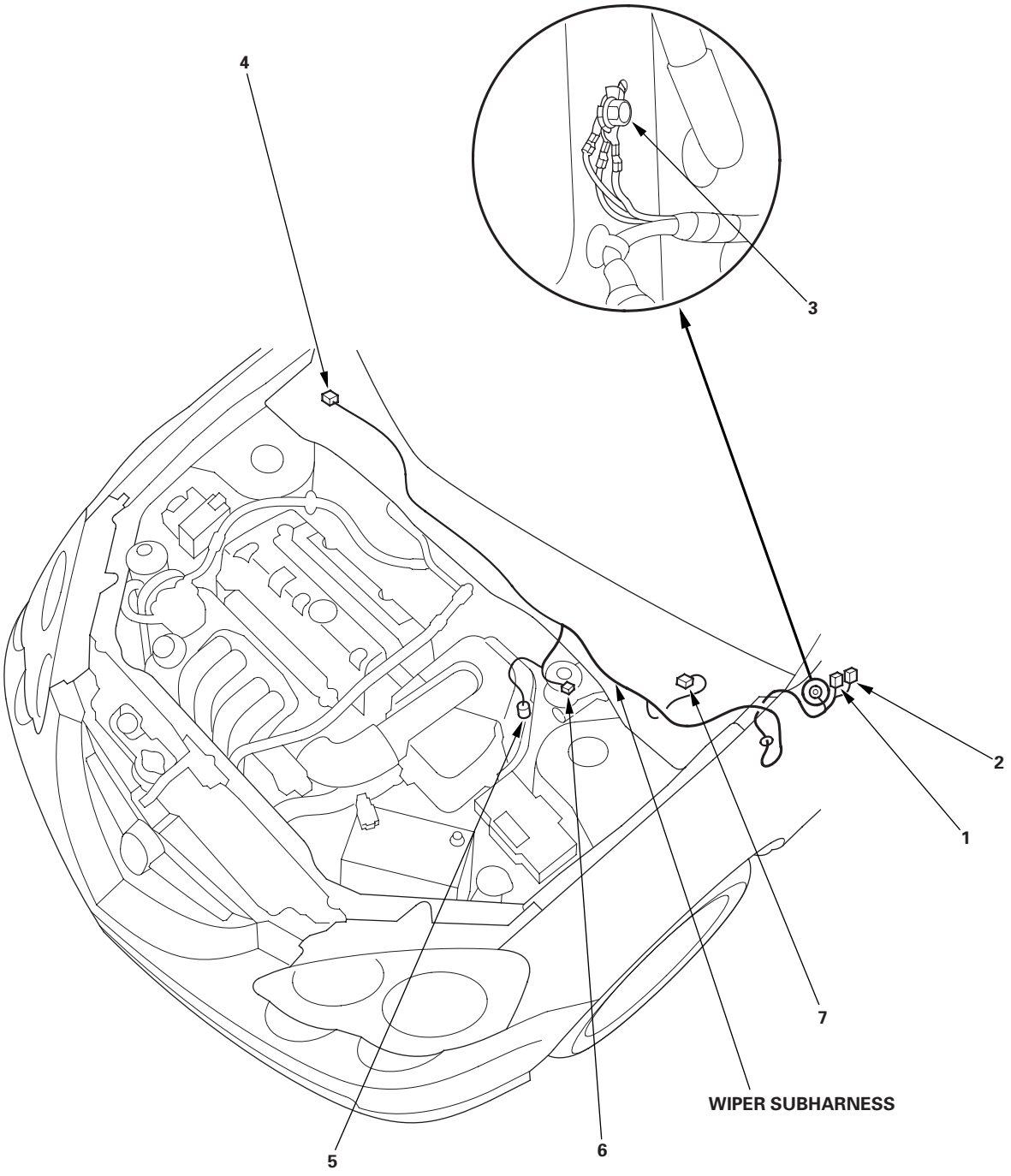
4
3
2
1
7
WIPER SUBHARNESS
6
5

Connector to Harness Index (cont'd)

Floor Wire Harness (Front branch)

Connector or Terminal	Ref	Cavities	Location	Connects to	Notes
Driver's seat belt buckle tensioner	8	4	Under driver's seat		
Driver's seat belt switch	9	3	Under driver's seat		
Driver's seat heater	10	2	Under driver's seat		Canada
Driver's side airbag inflator	11	2	Under driver's seat		
Front BOSE stereo amplifier	2	26	Under passenger's seat		
Memory erase signal (MES) connector	12	2	Under-dash fuse/relay box		
Optional rear accessory power socket connector	20	2	Middle of floor		Canada
Parking brake switch	5	1	Middle of floor		
Passenger's seat belt buckle tensioner	3	4	Under passenger's seat		
Passenger's seat belt switch	22	3	Under passenger's seat		* 1
Passenger's seat heater	25	2	Under passenger's seat		Canada *1
Passenger's side airbag inflator	23	2	Under passenger's seat		
Rear accessory power socket	4	2	Rear console		USA
Rear BOSE stereo amplifier relay	1	4	Under passenger's seat		
SRS unit connector B	15	18	Under middle of dash		
SRS unit connector C	16	8	Under middle of dash		
Under-dash fuse/relay box connector P	14	18	Under-dash fuse/relay box		
Under-dash fuse/relay box connector Q	13	8	Under-dash fuse/relay box		
C501	7	6	Under middle of dash	Engine compartment wire harness (see page 22-18)	
C502	6	1	Under middle of dash	Engine compartment wire harness (see page 22-18)	
C503	17	21	Under middle of dash	Dashboard wire harness (see page 22-26)	'02-04 models
C503	17	20	Under middle of dash	Dashboard wire harness (see page 22-26)	'05-06 models
C504	19	4	Under middle of dash	Dashboard wire harness (see page 22-26)	
C505	18	14	Under middle of dash	Dashboard wire harness (see page 22-26)	BOSE
C505	18	2	Under middle of dash	Dashboard wire harness (see page 22-26)	'02-04 models *1
C505	18	4	Under middle of dash	Dashboard wire harness (see page 22-26)	'05-06 models *1
C801	25	10	Under passenger's seat	Passenger's seat subharness (see page 22-48)	BOSE
C851	24	4	Under passenger's seat	OPDS unit harness (see page 22-48)	* 1
G501	21		Under passenger's seat	Body ground via floor wire harness	

* 1: Without BOSE Sound System

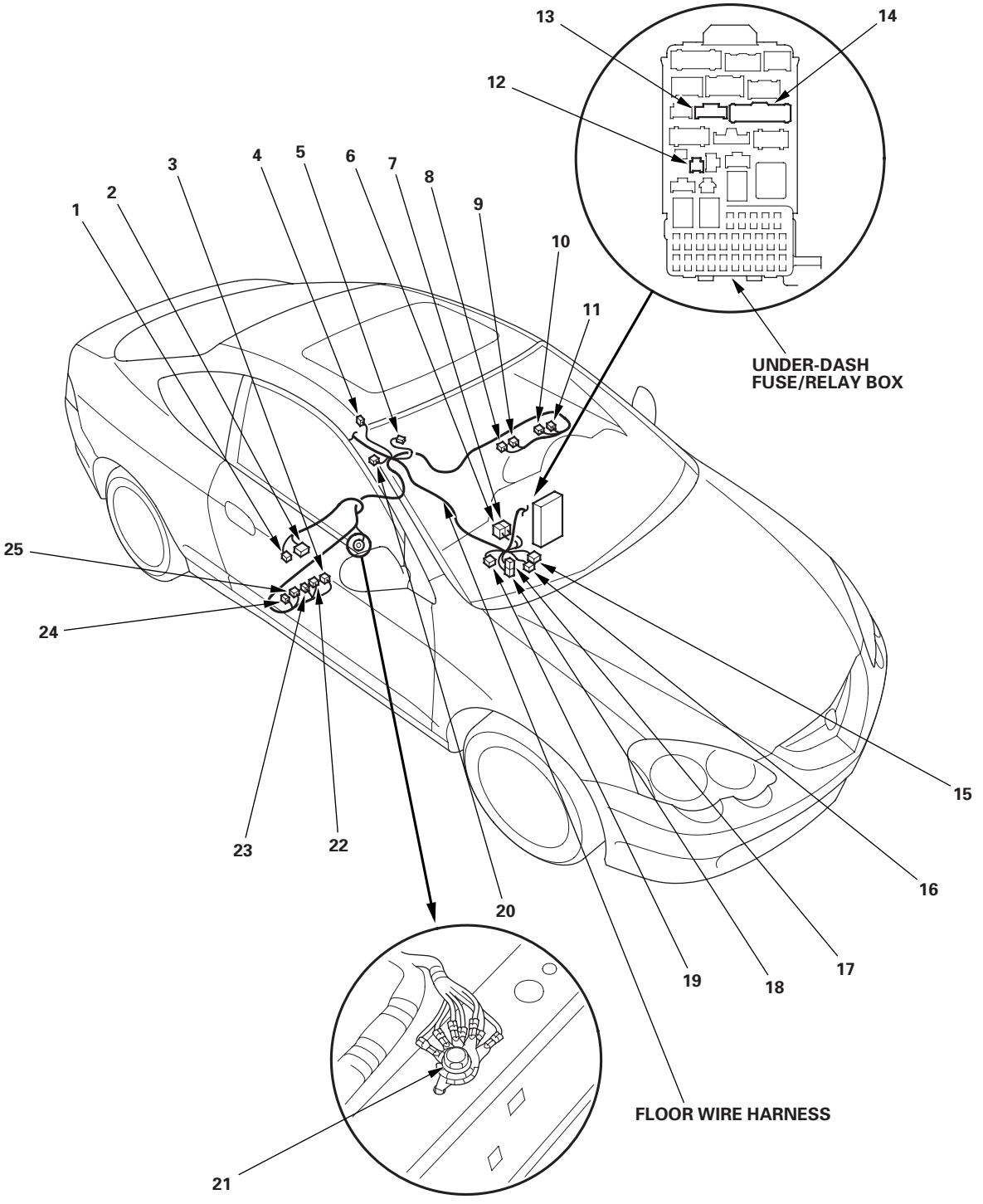
13
14
12
3
4
5
6
7
8
2
9
1
10
11
UNDER-DASH
FUSE/RELAY BOX
25
24
15
23
22
16
20
19
18
17
FLOOR WIRE HARNESS
21

Connector to Harness Index (cont'd)

Floor Wire Harness (Rear branch) ('02-04 models) (cont'd)

Connector or Terminal	Ref	Cavities	Location	Connects to	Notes
Driver's door switch	18	1	Left B-pillar		
Driver's seat belt tensioner	17	2	Left B-pillar		
Driver's side impact sensor	16	2	Left B-pillar		
EVAP emission bypass solenoid valve	11	2	Fuel tank		
EVAP emission control canister vent shut valve	9	2	Fuel tank		
Fuel gauge sending unit/Fuel pump	8	5	Fuel tank		
Fuel tank pressure sensor	10	3	Fuel tank		
Left rear wheel sensor	13	2	Left rear of floor		
Left rear speaker	15	2	Left quarter panel		
Passenger's door switch	2	1	Right B-pillar		
Passenger's seat belt tensioner	3	2	Right B-pillar		
Passenger's side impact sensor	1	2	Right B-pillar		
Rear BOSE stereo amplifier/woofer	12	6	At spare tire		
Right rear speaker	4	2	Right quarter panel		
C601	5	10	Right quarter panel	Rear wire harness (see page 22-40)	
C701	7	8	Right quarter panel	Hatch wire harness (see page 22-44)	
C702	6	2	Right quarter panel	Hatch wire harness (see page 22-44)	
G502	14		Behind left rear seat-back	Body ground via floor wire harness	BOSE

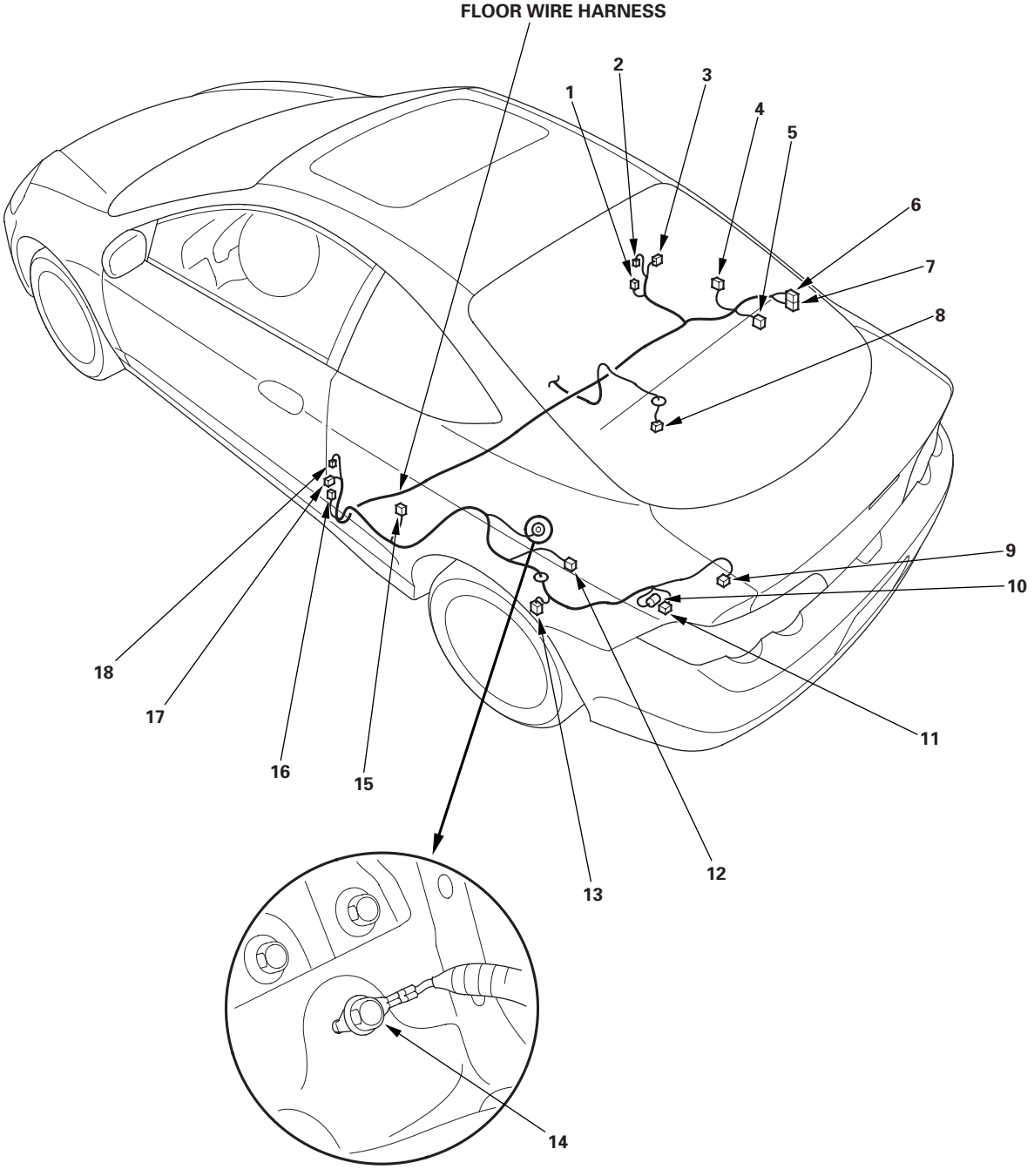
FLOOR WIRE HARNESS
1
2
3
4
5
6
7
8
9
10
11
12
13
14
15
16
17
18

Connector to Harness Index (cont'd)

Floor Wire Harness (Rear branch) ('05-06 models) (cont'd)

Connector or Terminal	Ref	Cavities	Location	Connects to	Notes
Driver's door switch	18	1	Left B-pillar		
Driver's seat belt tensioner	17	2	Left B-pillar		
Driver's side impact sensor	16	2	Left B-pillar		
EVAP emission bypass solenoid valve	11	2	Fuel tank		
Fuel gauge sending unit/Fuel pump	8	5	Fuel tank		
Left rear wheel sensor	13	2	Left rear of floor		
Left rear speaker	15	2	Left quarter panel		
Passenger's door switch	2	1	Right B-pillar		
Passenger's seat belt tensioner	3	2	Right B-pillar		
Passenger's side impact sensor	1	2	Right B-pillar		
Rear BOSE stereo amplifier/woofer	12	6	At spare tire		
Right rear speaker	4	2	Right quarter panel		
C601	5	20	Right quarter panel	Rear wire harness (see page 22-42)	
C651	9	6	Fuel tank	Fuel subharness	
C701	7	8	Right quarter panel	Hatch wire harness (see page 22-44)	
C702	6	2	Right quarter panel	Hatch wire harness (see page 22-44)	
G502	14		Behind left rear seat-back	Body ground via floor wire harness	BOSE

Fuel Subharness ('05-06 models)

Connector or Terminal	Ref	Cavities	Location	Connects to	Notes
EVAP emission control canister vent shut valve	10	2	Fuel tank		
Fuel tank pressure sensor	11	3	Fuel tank		
C651	9	6	Fuel tank	Floor wire harness	

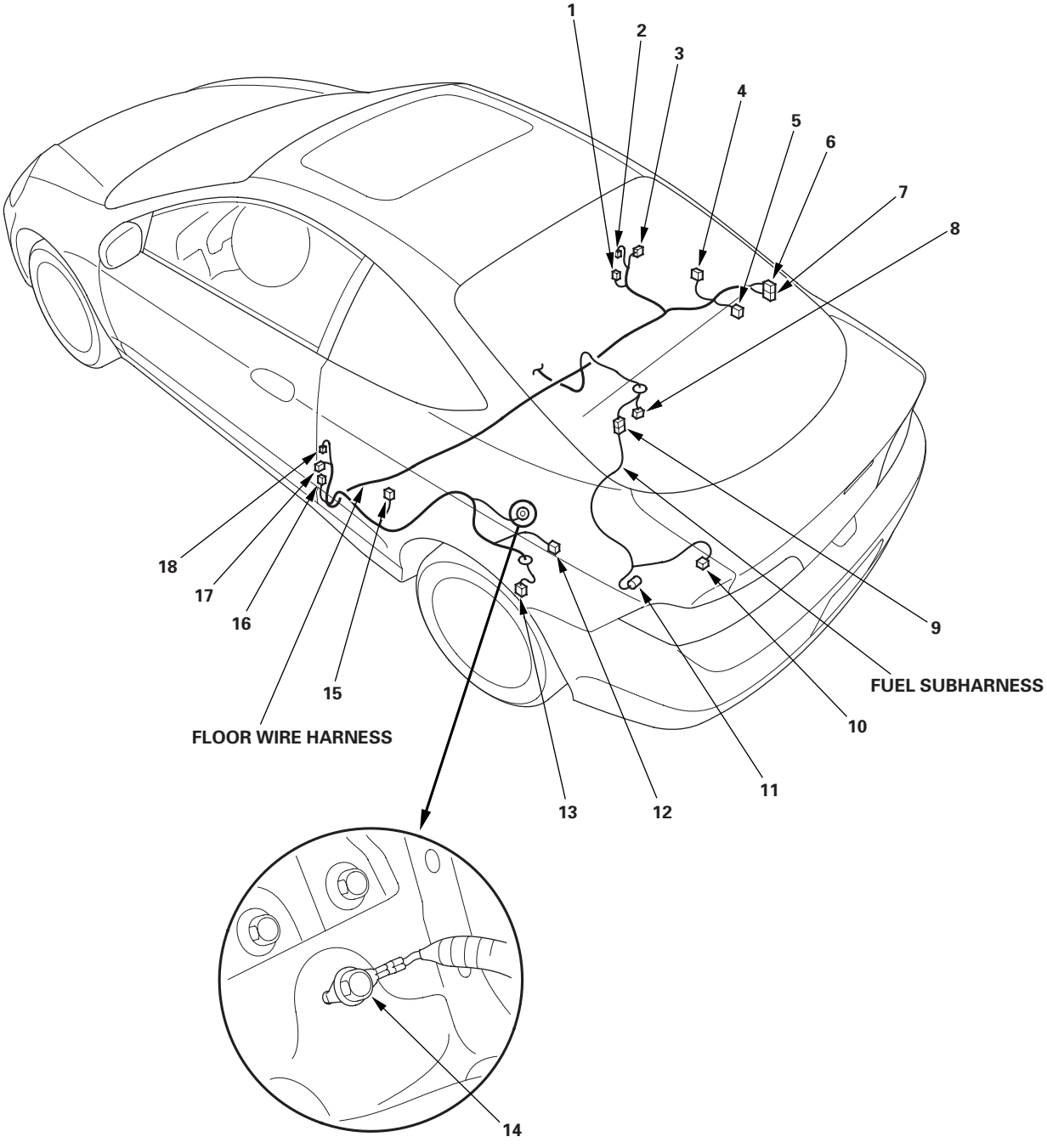
1
2
3
4
5
6
7
8
9
10
11
12
13
14
15
16
17
18
FUEL SUBHARNESS
FLOOR WIRE HARNESS

Connector to Harness Index (cont'd)

Rear Wire Harness ('02-04 models)

Connector or Terminal	Ref	Cavities	Location	Connects to	Notes
Cargo area light	3	2	Right side of cargo area		
Left back-up light	13	2	Left taillights		
Left rear side marker light	17	2	Left taillights		
Left rear turn signal light	16	2	Left taillights		
Left taillight/brake light connector A	15	3	Left taillights		
Left taillight/brake light connector B	14	3	Left taillights		
Right back-up light	9	2	Right taillights		
Right rear wheel sensor	2	2	Under right rear of floor		
Right rear side marker light	4	2	Right taillights		
Right rear turn signal light	5	2	Right taillights		
Right taillight/brake light connector A	6	3	Right taillights		
Right taillight/brake light connector B	7	3	Right taillights		
Trailer lighting connector	8	6	Middle of cargo area		
C601	1	10	Right rear side of floor	Floor wire harness (see page 22-34)	
C602	10	2	Middle of cargo area	License plate light subharness	
G601	12		Middle of cargo area	Body ground via rear wire harness	

License Plate Light Subharness ('02-04 models)

Connector or Terminal	Ref	Cavities	Location	Connects to	Notes
License plate light connector	11	2	Behind rear bumper		
C602	10	2	Middle of cargo area	Rear wire harness	

Rear Window Defogger Wire Harness ('02-04 models)

Connector or Terminal	Ref	Cavities	Location	Connects to	Notes
Rear window defogger connector A (+)	19	1	Left C-pillar		
Rear window defogger connector B (−)	20	1	Right C-pillar		
Window antenna coil connector B	18	2	Middle of hatch		

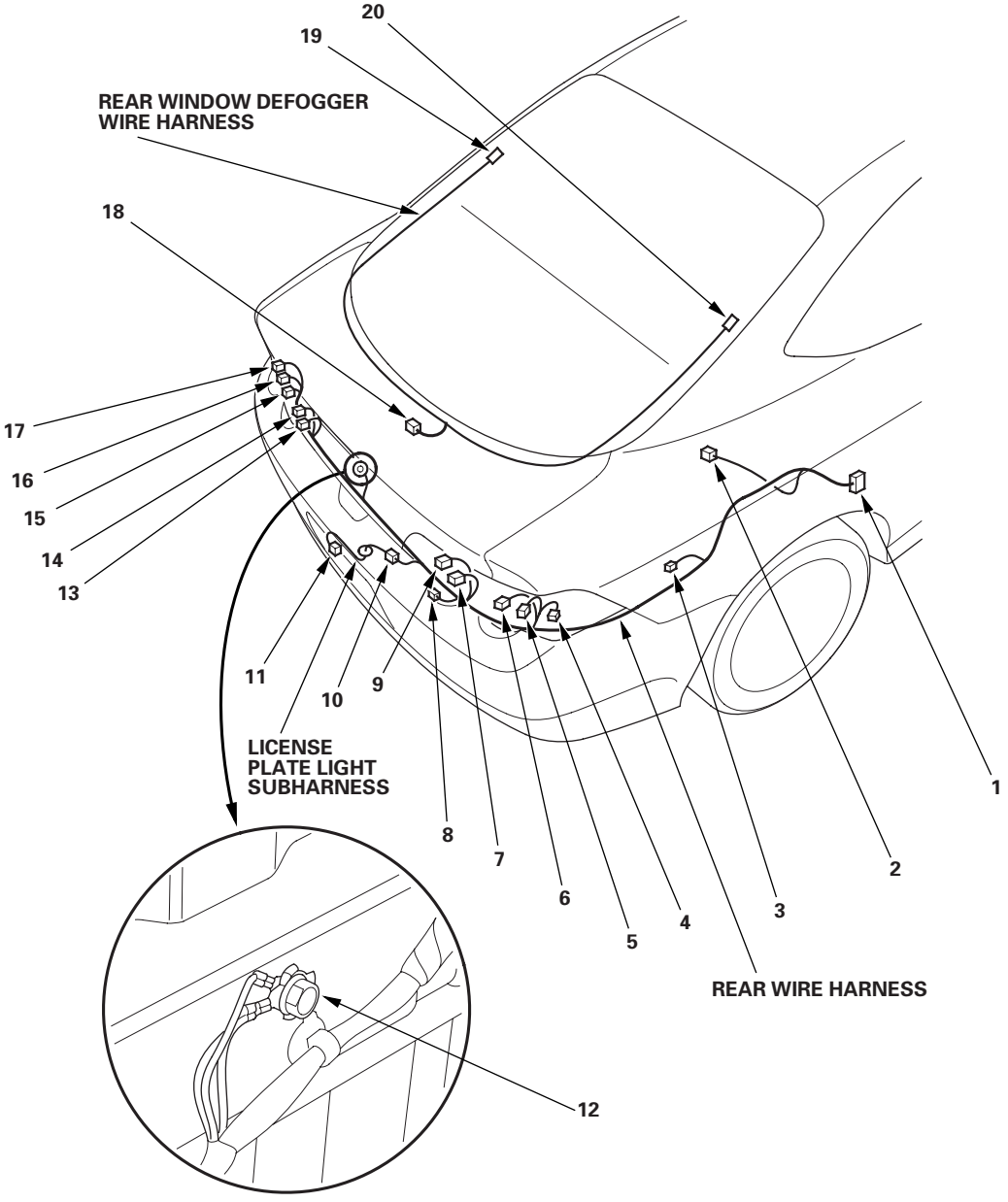
20
19
REAR WINDOW DEFOGGER
WIRE HARNESS
18
17
16
15
14
13
11
10
9
LICENSE
PLATE LIGHT
SUBHARNESS
8
7
6
5
4
3
2
1
REAR WIRE HARNESS
12

Connector to Harness Index (cont'd)

Rear Wire Harness ('05-06 models)

Connector or Terminal	Ref	Cavities	Location	Connects to	Notes
Cargo area light	3	2	Right side of cargo area		
Left back-up light	12	2	Left taillights		
Left rear side marker light	15	2	Left taillights		
Left rear turn signal light	14	3	Left taillights		
Left taillight/brake light connector B	13	3	Left taillights		
Right back-up light	9	2	Right taillights		
Right rear wheel sensor	2	2	Under right rear of floor		
Right rear side marker light	4	2	Right taillights		
Right rear turn signal light	5	3	Right taillights		
Right taillight/brake light connector	6	3	Right taillights		
Trailer lighting connector	7	6	Middle of cargo area		
C601	1	20	Right rear side of floor	Floor wire harness (see page 22-34)	
C602	10	2	Middle of cargo area	License plate light subharness	
G601	8		Middle of cargo area	Body ground via rear wire harness	

License Plate Light Subharness ('05-06 models)

Connector or Terminal	Ref	Cavities	Location	Connects to	Notes
License plate light connector	11	2	Behind rear bumper		
C602	10	2	Middle of cargo area	Rear wire harness	

Rear Window Defogger Wire Harness ('05-06 models)

Connector or Terminal	Ref	Cavities	Location	Connects to	Notes
Rear window defogger connector A (+)	16	1	Left C-pillar		
Rear window defogger connector B (−)	18	1	Right C-pillar		
Rear window defogger noise condenser	17	2	Middle of hatch		
C751	19	2	Middle of hatch	Hatch wire harness (see page 22-45)	

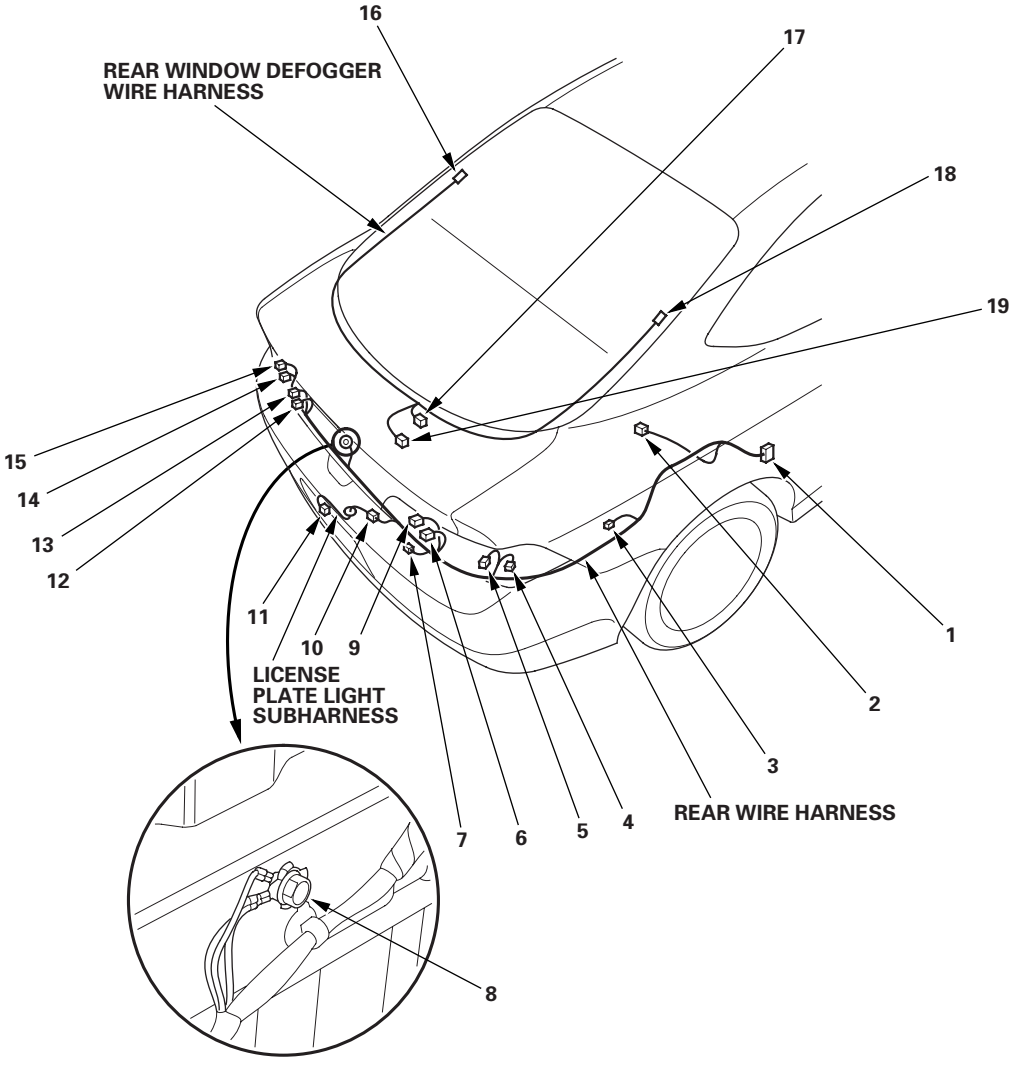
16
17
REAR WINDOW DEFOGGER
WIRE HARNESS
18
19
15
14
13
12
11
10
9
LICENSE
PLATE LIGHT
SUBHARNESS
1
2
3
REAR WIRE HARNESS
4
5
6
7
8

Connector to Harness Index (cont'd)

Hatch Wire Harness ('02-04 models)

Connector or Terminal	Ref	Cavities	Location	Connects to	Notes
Hatch latch switch	11	2	Middle of hatch		
Hatch lock actuator	1	2	Middle of hatch		
High mount brake light	9	2	Middle of hatch		
Noise condenser	6	3	Right C-pillar		
Rear window wiper motor	7	4	Right side of hatch		
Security hatch lock knob switch	10	3	Middle of hatch		
Window antenna coil connector A	2	1	Middle of hatch		
C701	5	8	Right quarter panel	Floor wire harness (see page 22-34)	
C702	4	2	Right quarter panel	Floor wire harness (see page 22-34)	
G701	3		Right C-pillar	Body ground via hatch wire harness	
G702	8		Middle of hatch	Body ground via hatch wire harness	

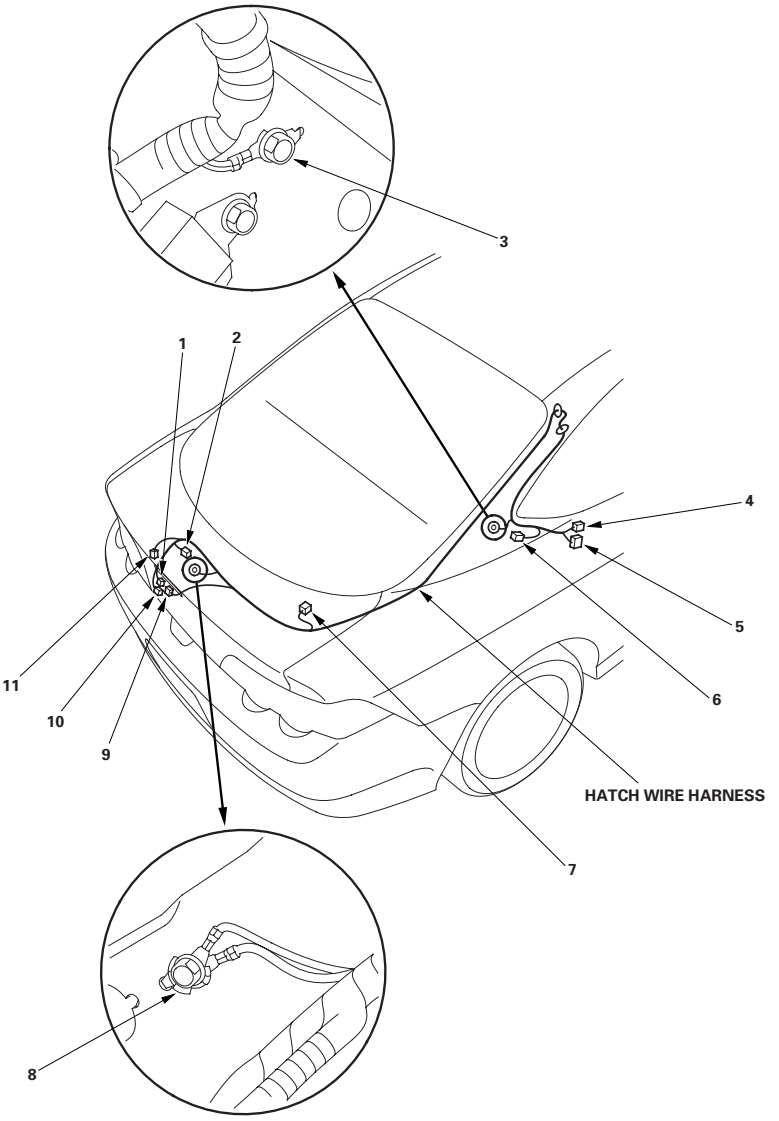

Hatch Wire Harness ('05-06 models)

Connector or Terminal	Ref	Cavities	Location	Connects to	Notes
Hatch latch switch	9	2	Middle of hatch		
Hatch lock actuator	10	2	Middle of hatch		
High mount brake light	7	2	Middle of hatch		
Noise condenser	4	3	Right C-pillar		
Rear window wiper motor	5	4	Right side of hatch		
Security hatch lock knob switch	8	3	Middle of hatch		
C701	3	8	Right quarter panel	Floor wire harness (see page 22-34)	
C702	2	2	Right quarter panel	Floor wire harness (see page 22-34)	
C703	11	2	Middle of hatch		
C751	6	2	Middle of hatch	Rear window defogger wire harness (see page 22-42)	
G701	1		Right C-pillar	Body ground via hatch wire harness	

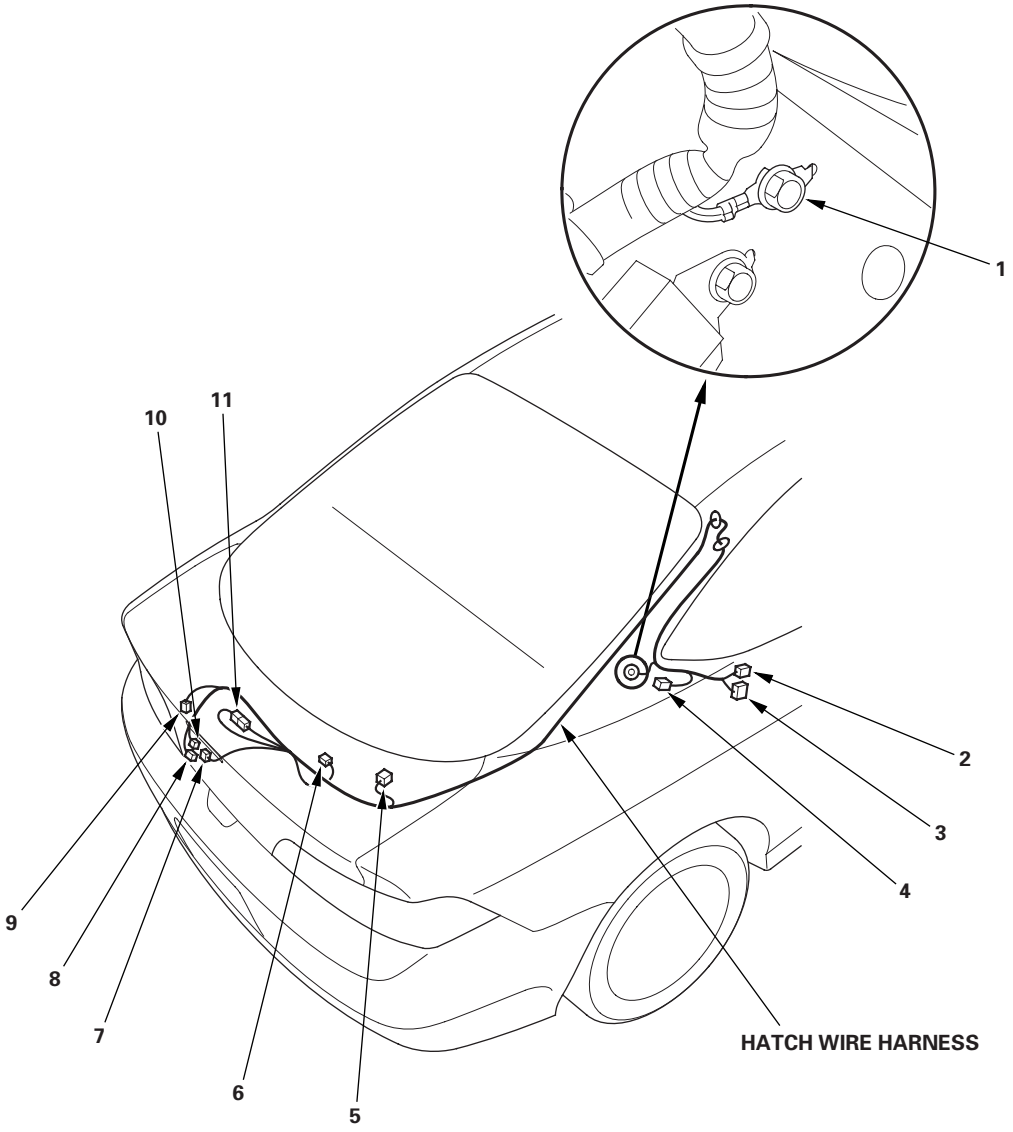

Connector to Harness Index (cont'd)

Roof Wire Harness

Connector or Terminal	Ref	Cavities	Location	Connects to	Notes
Ceiling light	3	3	Middle of roof		Moonroof
Ceiling light	5	3	Front of roof		Without moonroof
Moonroof motor	4	2	Middle of roof		Moonroof
Spotlight	2	2	Front of roof		Moonroof
C404	1	6	Under left side of dash	Dashboard wire harness (see page 22-26)	Moonroof
C404	6	6	Under left side of dash	Dashboard wire harness (see page 22-26)	Without moonroof

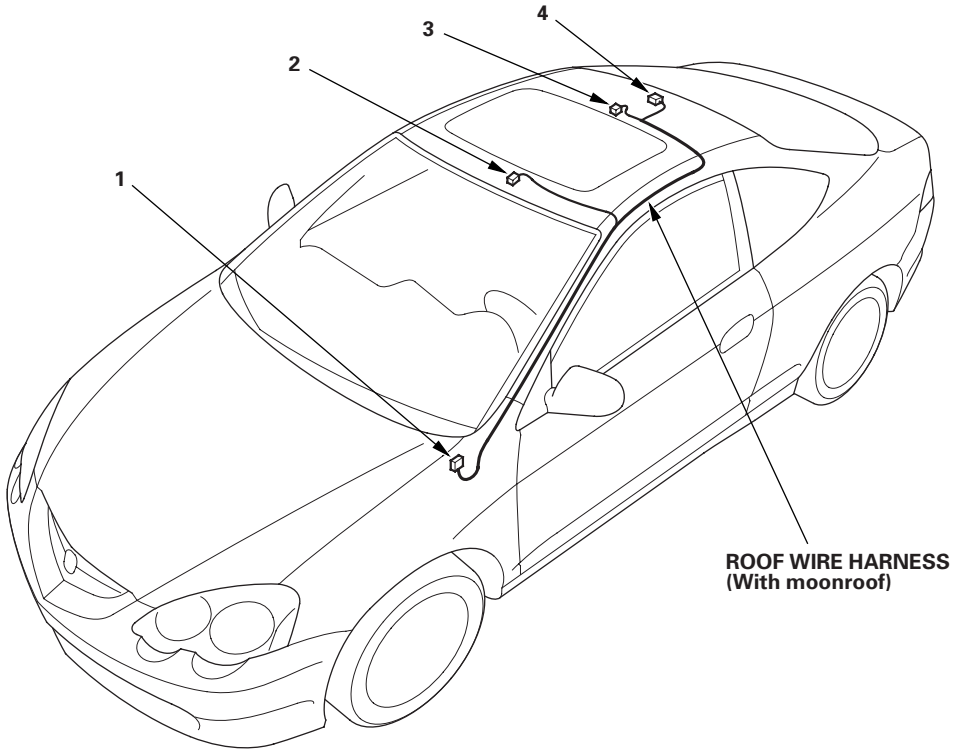
1
2
3
4
ROOF WIRE HARNESS
(With moonroof)

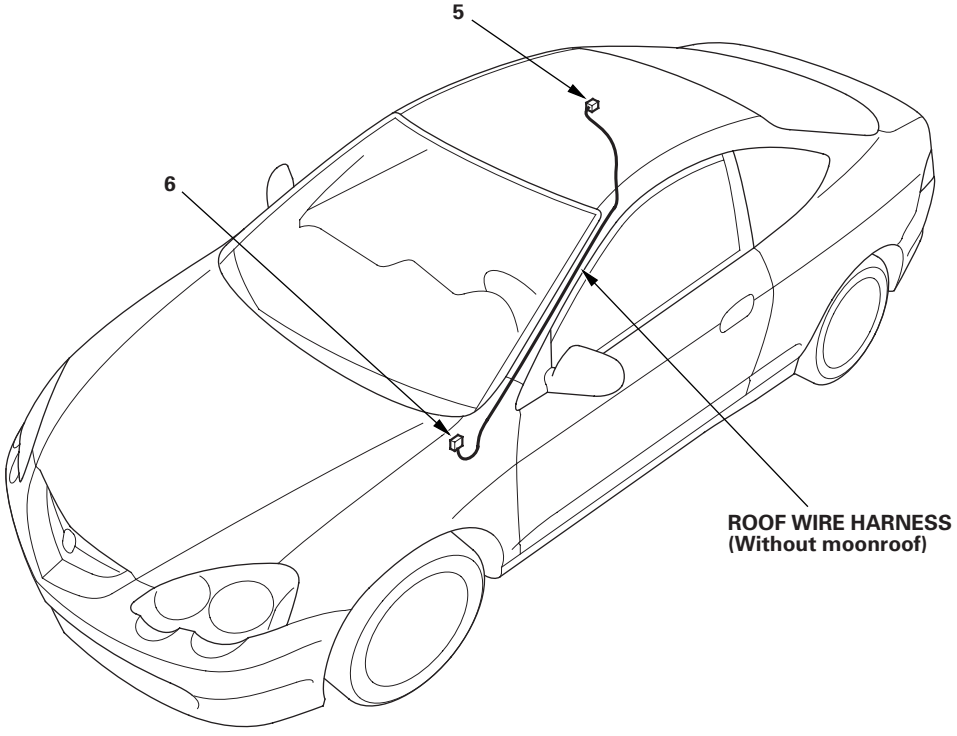
5
6
ROOF WIRE HARNESS
(Without moonroof)

Connector to Harness Index (cont'd)

Front Impact Sensor Harness (With BOSE Sound System)

Connector or Terminal	Ref	Cavities	Location	Connects to	Notes
Right front impact sensor	3	2	Behind right side of front bumper		
C405	4	4	Under right side of dash	Dashboard wire harness (see page 22-30)	

Floor Wire Harness (With BOSE Sound System) (SRS branch)

Connector or Terminal	Ref	Cavities	Location	Connects to	Notes
Driver's seat belt buckle tensioner	11	2	Under driver's seat		
Driver's seat belt tensioner	9	2	Left B-pillar		
Driver's side airbag inflator	12	2	Under driver's seat		
Driver's side impact sensor	10	2	Left side of floor		
Passenger's seat belt buckle tensioner	13	2	Under passenger's seat		
Passenger's seat belt tensioner	7	2	Right B-pillar		
Passenger's side airbag inflator	5	2	Under passenger's seat		
Passenger's side impact sensor	8	2	Right side of floor		
SRS unit connector B	1	18	Under middle of dash		
SRS unit connector C	2	8	Under middle of dash		
C801	15	10	Under passenger's seat	Passenger's seat subharness	

Passenger's Seat Subharness (With BOSE Sound System) (SRS branch)

Connector or Terminal	Ref	Cavities	Location	Connects to	Notes
C801	15	10	Under front passenger's seat	Floor wire harness	
C851	14	4	Under front passenger's seat	OPDS unit harness	

OPDS Unit Harness (With BOSE Sound System)

Connector or Terminal	Ref	Cavities	Location	Connects to	Notes
OPDS unit connector D	6	4	In passenger's seat		
C851	14	4	Under passenger's seat	Passenger's seat subharness	

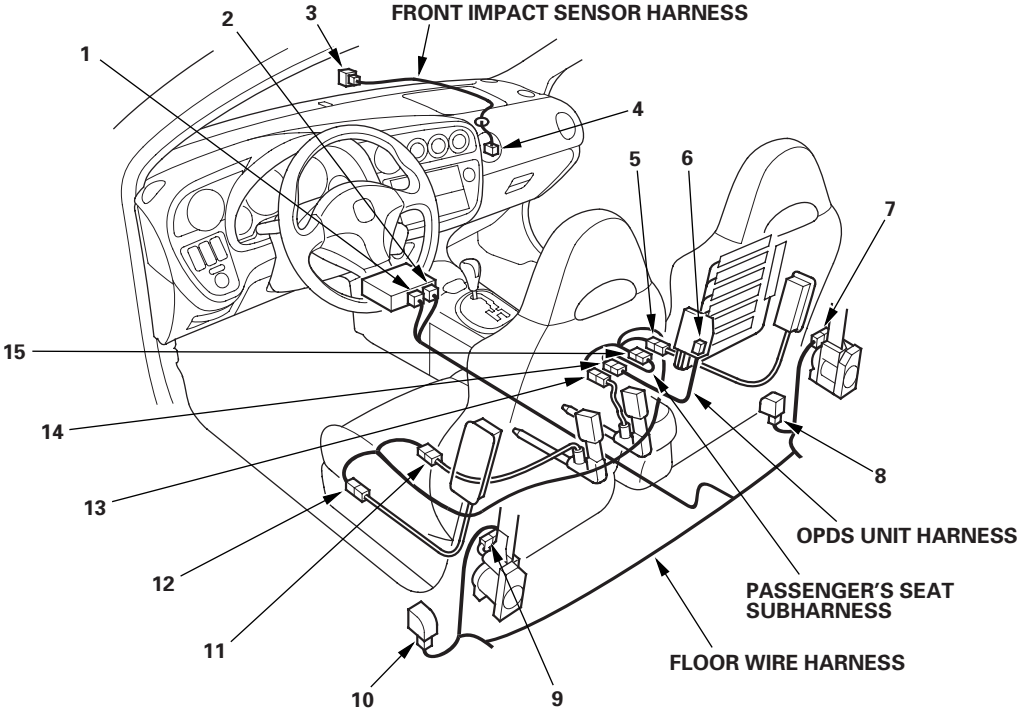

Front Impact Sensor Harness (Without BOSE Sound System)

Connector or Terminal	Ref	Cavities	Location	Connects to	Notes
Right front impact sensor	3	2	Behind right side of front bumper		
C405	4	2	Under right side of dash	Dashboard wire harness (see page 22-30)	

Floor Wire Harness (Without BOSE Sound System) (SRS branch)

Connector or Terminal	Ref	Cavities	Location	Connects to	Notes
Driver's seat belt buckle tensioner	13	2	Under driver's seat		
Driver's seat belt tensioner	11	2	Left B-pillar		
Driver's side airbag inflator	14	2	Under driver's seat		
Driver's side impact sensor	12	2	Left side of floor		
Passenger's seat belt buckle tensioner	5	2	Under passenger's seat		
Passenger's seat belt tensioner	9	2	Right B-pillar		
Passenger's side airbag inflator	7	2	Under passenger's seat		
Passenger's side impact sensor	10	2	Right side of floor		
SRS unit connector B	1	18	Under middle of dash		
SRS unit connector C	2	8	Under middle of dash		
C851	6	4	Under passenger's seat	OPDS unit harness	

OPDS Unit Harness (Without BOSE Sound System)

Connector or Terminal	Ref	Cavities	Location	Connects to	Notes
OPDS unit connector D	8	4	In passenger's seat		
C851	6	4	Under passenger's seat	Floor wire harness	

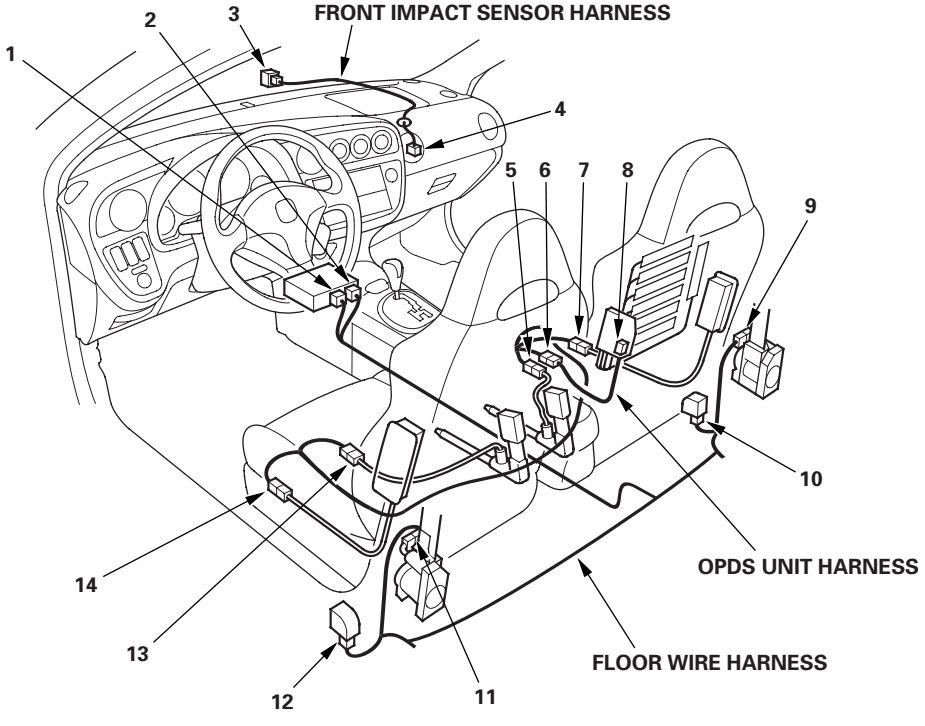

Connector to Harness Index (cont'd)

Driver's Door Wire Harness

Connector or Terminal	Ref	Cavities	Location	Connects to	Notes
Driver's door key cylinder switch	1	3	Driver's door		
Driver's door lock actuator	9	2	Driver's door		
Driver's door lock knob switch	10	3	Driver's door		
Driver's door lock switch	2	3	Driver's door		
Driver's power window motor	7	6	Driver's door		
Left front speaker	6	2	Driver's door		
Left power mirror	3	3	Driver's door		* 1
Left power mirror	3	6	Driver's door		* 2
Power window master switch	8	14	Driver's door		
C551	4	16	Under left side of dash	Dashboard wire harness (see page 22-26)	'02-04 models
C551	4	20	Under left side of dash	Dashboard wire harness (see page 22-26)	'05-06 models
C552	5	6	Under left side of dash	Dashboard wire harness (see page 22-26)	

* 1: '02-04 USA models
* 2: '02-04 Canada models and '05-06 models

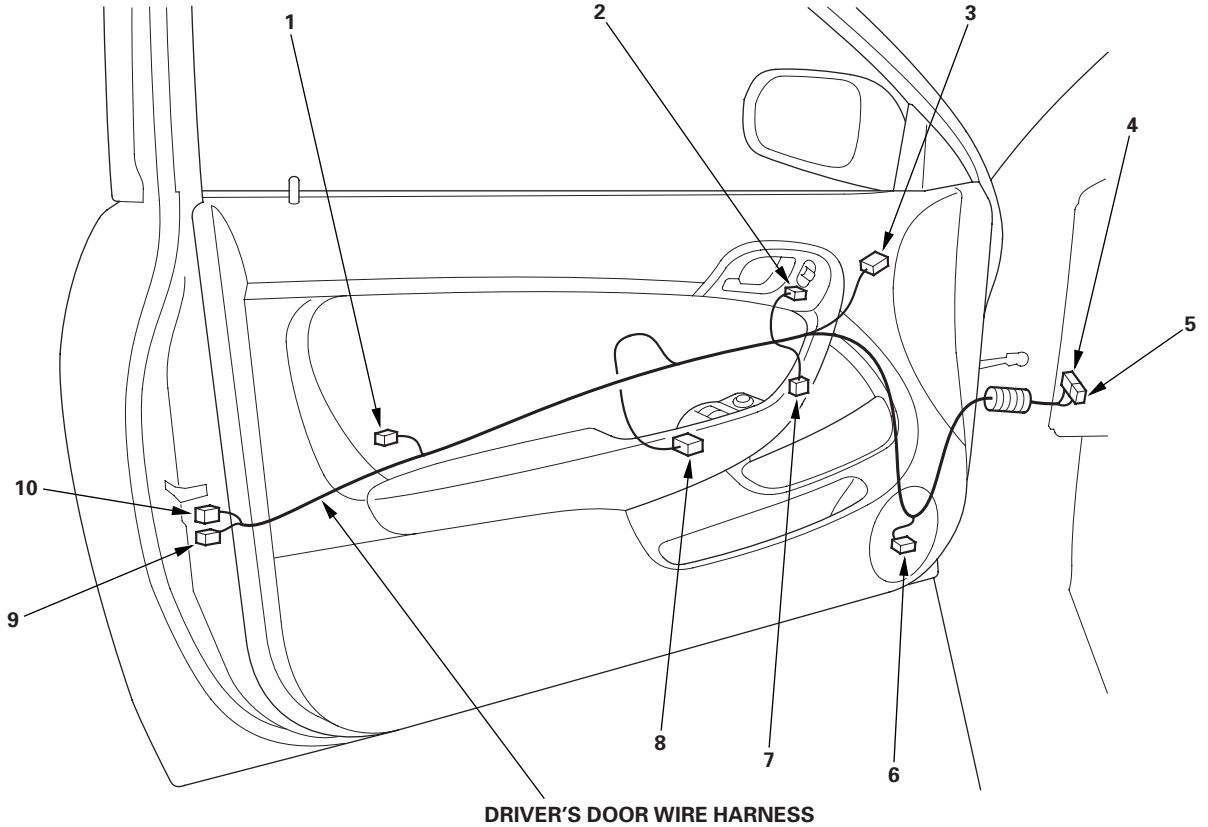

DRIVER'S DOOR WIRE HARNESS

Passenger's Door Wire Harness

Connector or Terminal	Ref	Cavities	Location	Connects to	Notes
Passenger's door key cylinder switch	4	3	Passenger's door		
Passenger's door lock actuator	6	2	Passenger's door		
Passenger's door lock knob switch	5	3	Passenger's door		
Passenger's door lock switch	3	3	Passenger's door		
Passenger's power window motor	8	2	Passenger's door		
Passenger's power window switch	7	5	Passenger's door		
Right front speaker	9	2	Passenger's door		
Right power mirror	2	3	Passenger's door		* 1
Right power mirror	2	6	Passenger's door		* 2
C571	1	18	Under right side of dash	Dashboard wire harness (see page 22-26)	'02-04 models
C571	1	20	Under right side of dash	Dashboard wire harness (see page 22-26)	'05-06 models

* 1: '02-04 USA models
* 2: '02-04 Canada models and '05-06 models

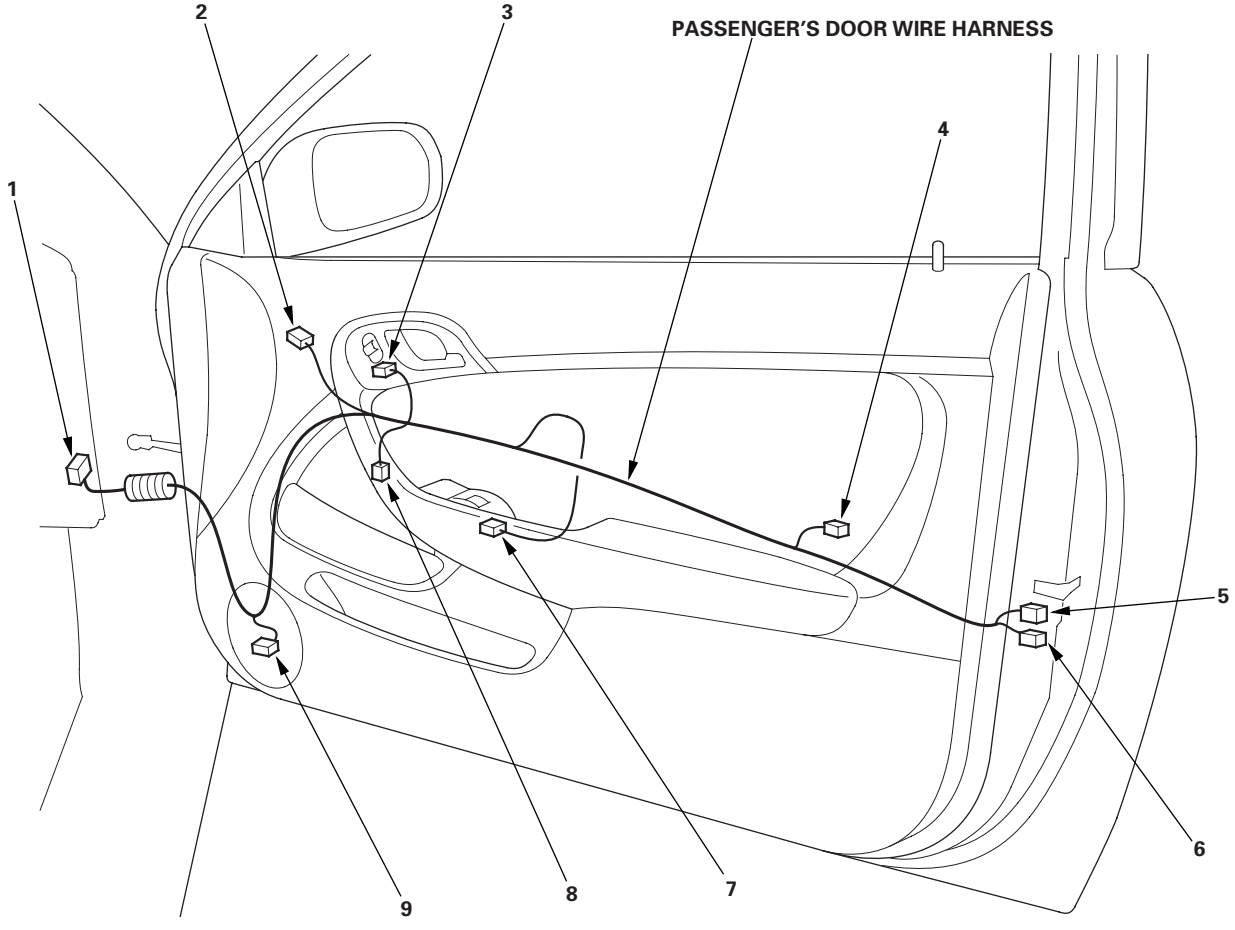

Connector to Harness Index (cont'd)

A/C Wire Harness

Connector or Terminal	Ref	Cavities	Location	Connects to	Notes
Air mix control motor	1	5	Under middle of dash		
Blower motor	5	2	Under right side of dash		
Evaporator temperature sensor	2	2	Under middle of dash		
Mode control motor	8	10	Under right side of dash		
Power transistor	4	4	Under right side of dash		
Recirculation control motor	9	5	Under right side of dash		
C481	7	21	Behind glove box	Dashboard wire harness (see page 22-26)	
C482	6	1	Behind glove box	Dashboard wire harness (see page 22-26)	
C483	3	1	Under middle of dash	Engine compartment wire harness (see page 22-18)	

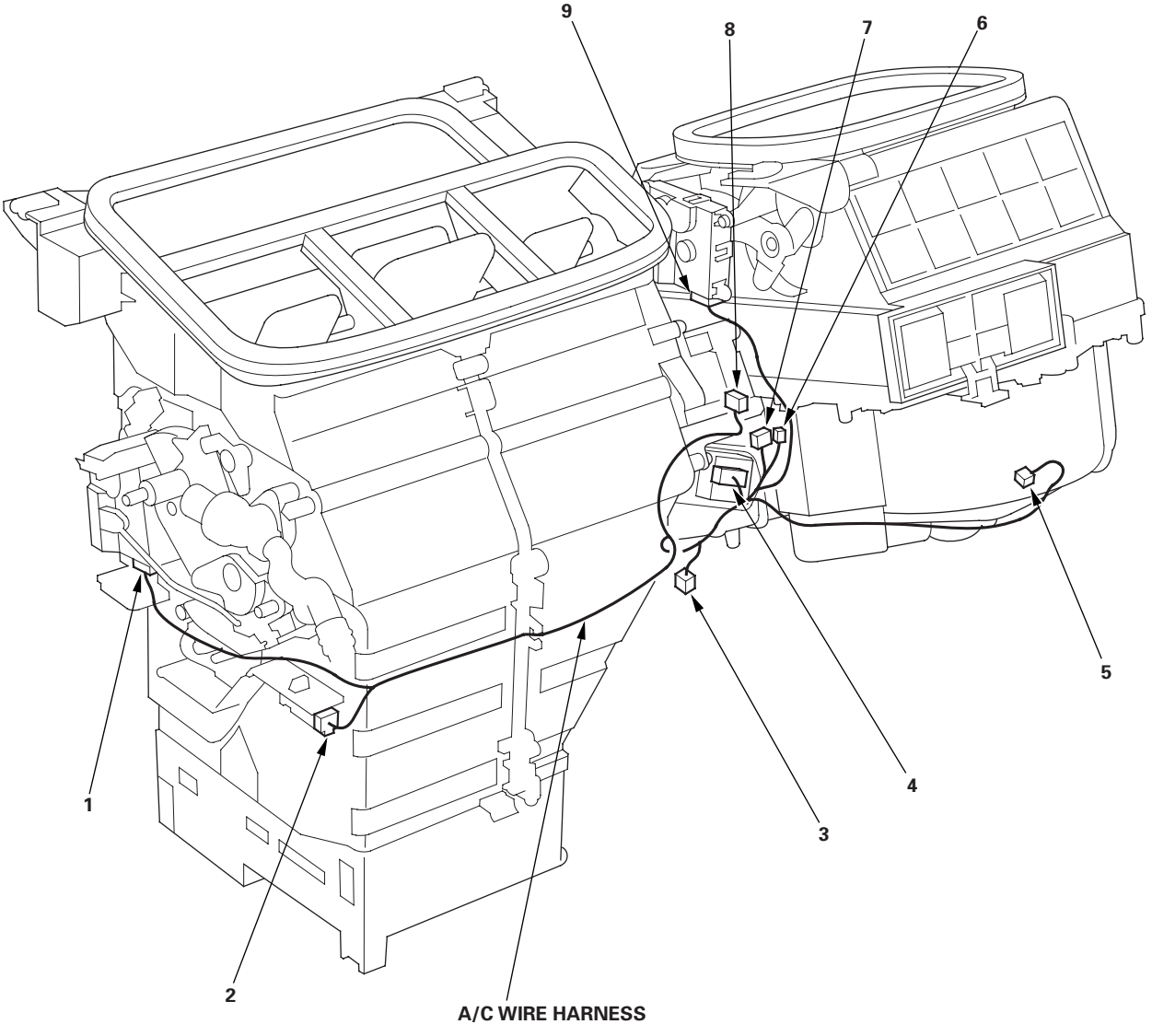

Passenger's Seat Subharness (With BOSE Sound System)

Connector or Terminal	Ref	Cavities	Location	Connects to	Notes
Passenger's seat belt buckle switch	3	3	Under passenger's seat		
Seat heater	4	2	Under passenger's seat		Canada
C801	2	10	Under passenger's seat	Floor wire harness (see page 22-34)	
C851	1	4	Under passenger's seat	OPDS unit harness (see page 22-48)	

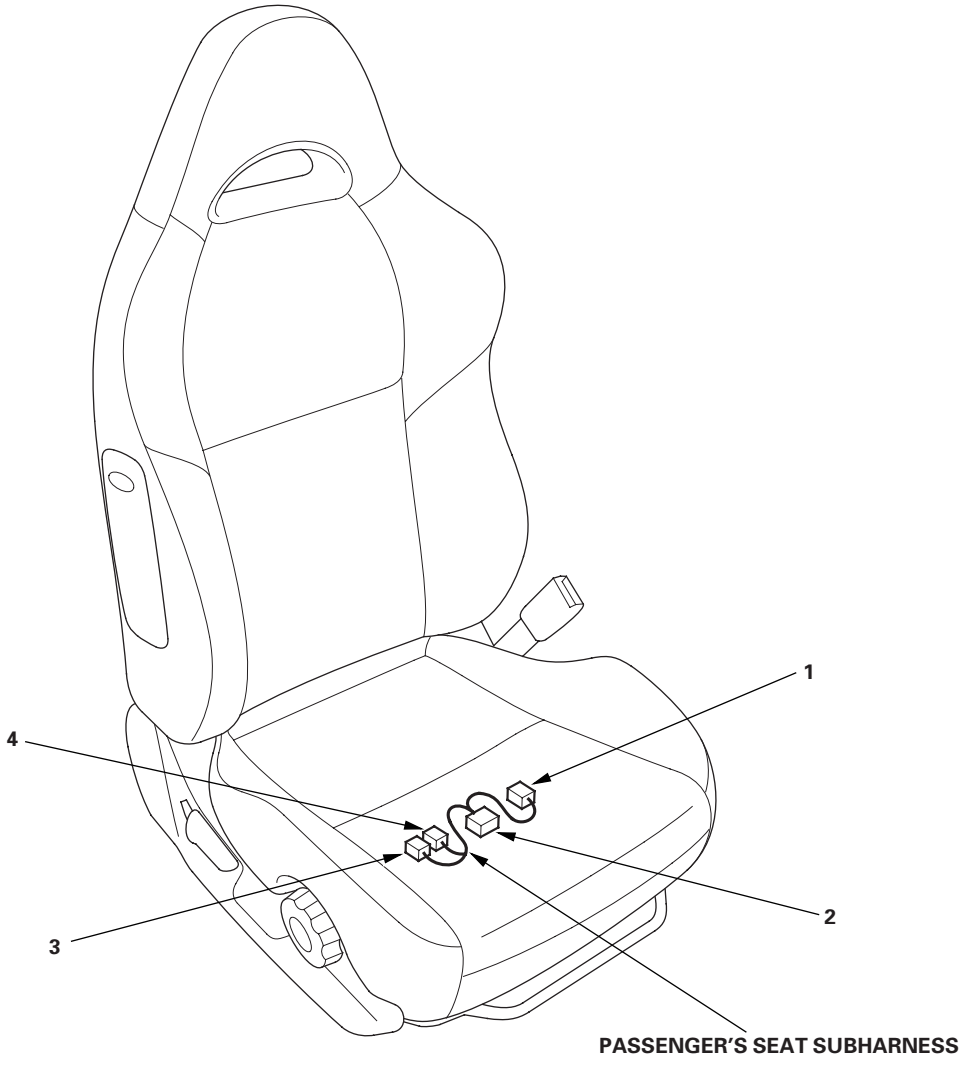

Connector to Fuse/Relay Box Index

Under-hood Fuse/Relay Box

Socket	Ref	Terminal	Connects to
A	11	2	Engine compartment wire harness (see page 22-18)
A/C compressor clutch relay	6	4	
A/C condenser fan relay	3	4	
B	16	5	Engine compartment wire harness (see page 22-18)
Blower motor relay	8	4	
C	12	12	Engine compartment wire harness (see page 22-18)
D	15	14	Engine compartment wire harness (see page 22-18)
E	14	7	Engine compartment wire harness (see page 22-18)
ELD unit	13	3	Engine compartment wire harness (see page 22-18)
Horn relay	4	4	
Headlight relay 1	9	4	
Headlight relay 2	10	4	
Radiator fan relay	5	4	
Rear window defogger relay	7	4	
T1 (Battery)	2		Starter subharness (see page 22-13)
T101 (Alternator)	1		Starter subharness (see page 22-13)

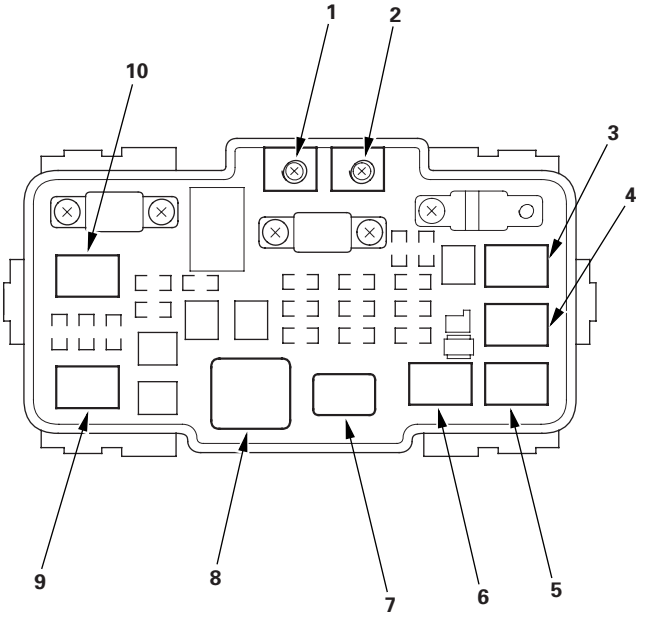

(View of front side)

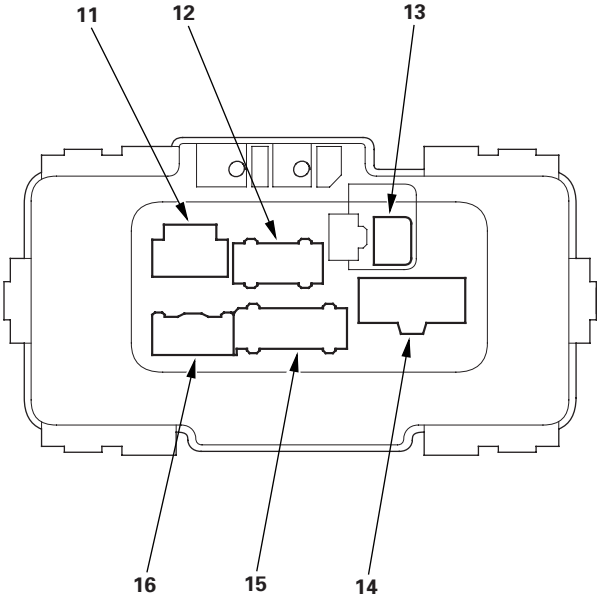

(View of back side)

Under-dash Fuse/Relay Box

Socket	Ref	Terminal	Connects to
A	2	5	Dashboard wire harness (see page 22-26)
B	3	6	Dashboard wire harness (see page 22-26)
C	1	14	Dashboard wire harness (see page 22-26)
D	4	12	Dashboard wire harness (see page 22-26)
E	5	13	Dashboard wire harness (see page 22-26)
F	19	12	Engine compartment wire harness (see page 22-18)
G	9	10	Engine compartment wire harness (see page 22-18)
H	8	3	Engine compartment wire harness (see page 22-18)
I	20	5	Engine compartment wire harness (see page 22-18)
J	21	8	Engine compartment wire harness (see page 22-18)
K	23	17	Dashboard wire harness (see page 22-26)
L	24	10	Dashboard wire harness (see page 22-26)
M	22	12	Dashboard wire harness (see page 22-26)
N	27	6	Dashboard wire harness (see page 22-26)
O	26	12	Dashboard wire harness (see page 22-26)
P	7	18	Floor wire harness (see page 22-34)
Q	6	8	Floor wire harness (see page 22-34)
R	10	6	Dashboard wire harness (see page 22-26)
Power window relay	12	4	
S	25	2	Dashboard wire harness (see page 22-26)
Starter cut relay	14	4	
T	18	3	Multiplex control unit service check connector
Taillight relay	13	4	
Turn signal/hazard relay	11	3	
U	15	1	Optional connector
V	16	4	Optional connector
W (Memory erase signal (MES) connector)	17	2	Floor wire harness (see page 22-34)
X	28	8	(Plugs directly into the multiplex control unit)
Y	29	13	(Plugs directly into the multiplex control unit)

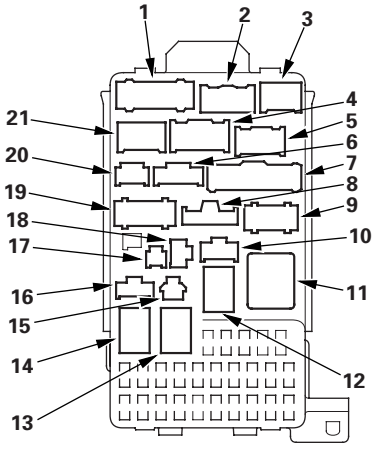

(View of front side)

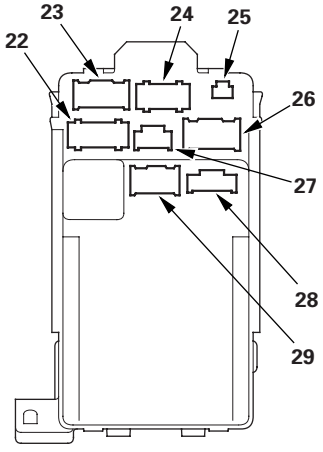

(View of back side)

Fuse to Components Index

Under-hood Fuse/Relay Box

Fuse Number	Amps	Wire Color	Component(s) or Circuit(s) Protected
1	30 A	BLU/YEL	A/C condenser fan motor
		BLU/RED	A/C compressor clutch
2	15 A *3	WHT/GRN	Dash lights, Front parking lights, Front side marker lights *4, License plate lights, Taillights, Trailer lighting connector, Rear side marker lights
	10 A *4		
3	7.5 A	WHT/BLU	Cargo area light, Ceiling light, Ignition key light, Spotlights (with moonroof)
4	20 A	BLU/BLK	Radiator fan motor
5	15 A *3	WHT/BLK	Turn signal/hazard relay, Turn signal lights
	10 A *4		
6	15 A *3	WHT/BLK	CKP sensor, ECM/PCM, IAC valve, Immobilizer control unit-receiver, Injectors, PGM-FI main relay 1 and 2, Camshaft position (CMP) sensor B
	20 A *4	RED/YEL	No. 31 and No. 32 fuses (in the auxiliary under-dash fuse/relay box)
7	15 A	WHT/GRN	Brake lights, Brake signals to ABS modulator-control unit, Cruise control unit, ECM/PCM, Trailer lighting connector, Security horn relay, Security horn
		BLU/RED	Horn
8	20 A	WHT/GRN	ABS modulator-control unit
9	7.5 A	WHT/RED	Audio unit, Data link connector (DLC), Gauge assembly, Immobilizer control unit-receiver, Immobilizer indicator, Keyless receiver unit, Multiplex control unit, Security control unit
10	30 A	WHT/RED	ABS modulator-control unit
11	40 A	BLK/YEL	Rear window defogger, Noise condenser
12	40 A	BLU/WHT	Blower motor
13	40 A	WHT/BLK	No. 7 and 21 fuses (in the under-dash fuse/relay box), Power window relay
14	30 A	WHT/RED	No. 2, 3, 15 and 16 fuses (in the under-dash fuse/relay box)
15	20 A	RED/YEL	Daytime running lights relay (Canada), Daytime running lights control unit (Canada), High beam indicator light (USA), Left headlight
16	15 A	WHT	Multiplex control unit
17	20 A	RED	Daytime running lights control unit (Canada), Right headlight
18	———	WHT/BLU	Optional connector (Canada)
19	100 A	———	Battery, Power distribution
20	40 A *1	WHT	Ignition switch (BAT)
	50 A *2		

* 1: USA
* 2: Canada
* 3: '02-04 models
* 4: '05-06 models

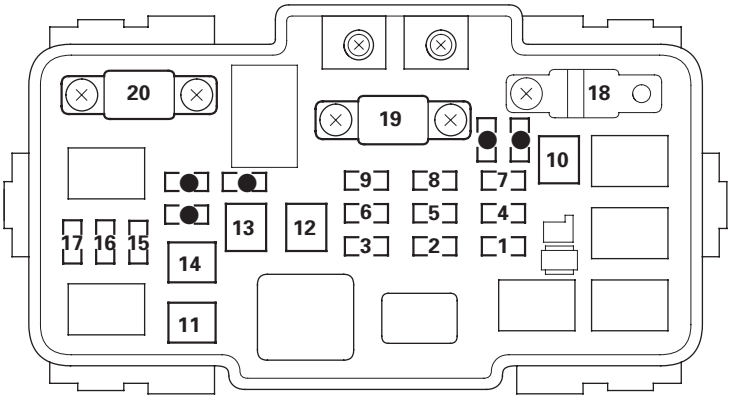

●: Spare fuse
* : Not used

Under-dash Fuse/Relay Box

Fuse Number	Amps	Wire Color	Component(s) or Circuit(s) Protected
1	15 A	BLK/WHT	Ignition coils
2	20 A	WHT/RED	A/F sensor, ECM/PCM
3	10 A	RED/BLU	Daytime running lights control unit (Canada), Rear accessory power socket (USA)
4	10 A	BLK/ORN	Alternator, A/F sensor relay, CMP sensor, Cruise control unit, ELD unit, Evaporative emission (EVAP) bypass solenoid valve, Evaporative emission (EVAP) canister vent shut valve, Evaporative emission (EVAP) canister purge valve, IMT (IMRC) solenoid valve, Reverse lock solenoid (Type S), Secondary HO2S, Vehicle speed sensor (M/T)
5	———	———	Not used
6	7.5 A	YEL/GRN	Moonroof open and close relay, Power window control unit (in the power window master switch), Power window relay
7	20 A	GRN	Moonroof motor
8	7.5 A	YEL/RED	Audio unit, Shift lock solenoid
9	10 A	GRN	OPDS unit, Rear window wiper motor, Rear window washer motor
10	7.5 A	YEL	A/T reverse relay, Back-up lights, Gauge assembly, Keyless receiver unit, Multiplex control unit, Security control unit, Shift lock relay
11	7.5 A	BLK/ORN	ABS modulator-control unit
12	7.5 A	YEL/RED	Daytime running lights control unit (Canada)
13	10 A	PNK	SRS unit
14	10 A	BLK/YEL	A/C compressor clutch relay, Climate control unit, A/C condenser fan relay, Blower motor relay, Power mirror actuator, Power mirror defogger (Canada), Radiator fan relay, Recirculation control motor, Rear window defogger relay, Seat heater relay (Canada)
15	20 A	BLU/RED	Front stereo amplifier (with BOSE sound system), Rear stereo amplifier (with BOSE sound system)
16	20 A	RED/BLK	Seat heater (Canada)
17	15 A	BLK/YEL	ECM/PCM, Fuel pump, SRS unit
18	15 A	YEL/GRN	Front accessory power socket, Rear accessory power socket relay (USA)
19	7.5 A	YEL/BLK	Turn signal/hazard relay, Turn signal lights
20	20 A	GRN/BLK	Multiplex control unit, Windshield wiper motor, Windshield washer motor
21	———	———	Not used
22	20 A	GRN/BLK	Passenger's window motor
23	20 A	GRN/WHT	Driver's window motor
24	———	———	Not used
25	———	———	Not used

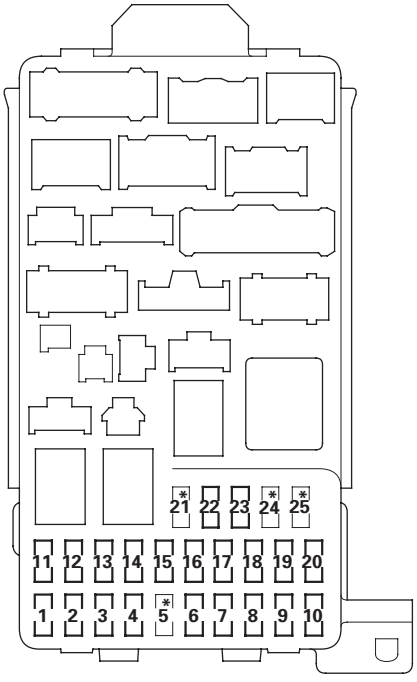

***: Not used**

(cont'd)

Fuse to Components Index (cont'd)

Auxiliary Under-dash Fuse/Relay Box ('05-06 models)

Fuse Number	Amps	Wire Color	Component(s) or Circuit(s) Protected
31	15 A	BLU	Ignition coil relay
32	15 A	WHT/BLK	PGM-FI main relay

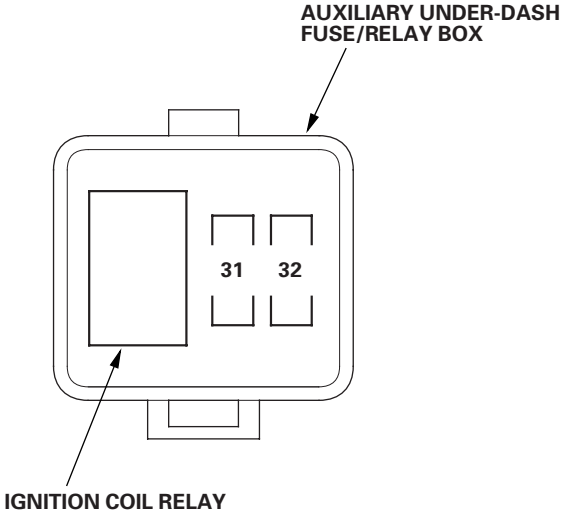

Ground to Components Index

Ground	Component(s) or circuit(s) grounded
G1	Battery, Transmission housing
G2	Engine mount bracket
G101	ECM/PCM (PG1 and PG2 are BLK; LG1 and LG2 are BRN/YEL), CMP sensor, CKP sensor, Data link connector (DLC), Immobilizer control unit-receiver, Idle air control (IAC) valve, Ignition coils, Input shaft (mainshaft) speed sensor (A/T) *1, Output shaft (countershaft) speed sensor (A/T) *1, TDC sensor, Transmission range switch (A/T), Vehicle speed sensor (VSS) (M/T) *1, Rocker arm oil pressure switch (VTEC oil pressure switch), Rocker arm oil control solenoid (VTEC solenoid valve)
	Shielding between the ECM/PCM and Knock sensor has BRN/YEL wire
G201	Right headlight (low beam), Right front parking light, Right front turn signal light, Right front side marker light *2
G202	ABS modulator-control unit (2 wires)
G301	Blower motor relay, ELD unit, Left headlight (low beam), Left front parking light, Left front turn signal light, Windshield and rear window washer motors, Windshield washer fluid level switch (Canada), Power window relay, Turn signal/hazard relay, Multiplex control unit (3 wires), Multiplex control unit service check connector, Left front side marker light *2
G302	A/C condenser fan motor, Hood switch (security), Radiator fan motor, Radiator fan switch
G401	Combination light switch, Cruise control unit, Cruise control main switch, Data link connector (DLC), Daytime running lights control unit (Canada) (2 wires), Driver's door lock knob switch, Driver's door lock switch, Driver's door key cylinder switch, Front accessory power socket, Gauge assembly, Ignition key switch, Keyless receiver unit, Left power mirror defogger (Canada), Moonroof open/close relays, Moonroof switch, Multiplex control unit (2 wires), Power mirror switch, Power window master switch (2 wires), Rear accessory power socket relay (USA), Security control unit *1, Wiper/washer switch (windshield and rear window)
G402	Climate control unit, Clutch pedal position switch (M/T), Clutch interlock switch (M/T), Gauge assembly, Glove box light, Ignition key switch (A/T), Park pin switch/shift lock solenoid (A/T), Power transistor, Seat heater relay (Canada), Seat heater switch (Canada), Shift lock relay (A/T), Passenger's door lock switch, Passenger's door lock knob switch, Passenger's door key cylinder switch, Right power mirror defogger (Canada), Security control unit *2
G403	Audio unit
	Shielding between the audio unit and speaker has RED/BLU wire (With BOSE sound system)
G404	SRS unit (2 wires), SRS front sensors
G451	Brake fluid level switch, Cruise control actuator, Power steering pressure (PSP) switch, Windshield wiper motor
G501	Fuel gauge sending unit, Fuel pump, Memory erase signal (MES) connector, Optional rear accessory power socket (Canada), Rear accessory power socket (USA), Seat belt switches, Seat heaters (Canada), OPDS unit
G502	Front BOSE stereo amplifier, Rear BOSE stereo amplifier, Rear BOSE stereo amplifier relay
G601	Left taillight/brake lights (2 wires), Left back-up light, Left rear side marker light, Left rear turn signal light, License plate light, Right taillight/brake lights (2 wires), Right back-up light, Right rear side marker light, Right rear turn signal light, Trailer lighting connector
G701	Hatch latch switch, High mount brake light, Rear window wiper motor, Security hatch lock knob switch, Shielding (High mount brake light, Hatch latch switch), Shielding (High mount brake light, Hatch latch switch) *2
G702 *1	Shielding (Rear window wiper motor, Condenser, Hatch lock actuator)

* 1: '02-04 models
* 2: '05-06 models

Under-dash Fuse/Relay Box

Removal and Installation

SRS components are located in this area. Review the SRS component locations (see page 23-10) and precautions and procedures (see page 23-11) before performing repairs or service.

Removal

1. Make sure you have the anti-theft code for the radio, then write down the frequencies for the radio's preset buttons.

2. Disconnect the battery negative cable, then disconnect the positive cable, and wait at least 3 minutes.

3. Remove the dashboard lower cover (see page 20-63).

4. Disconnect the connectors from the fuse side of the under-dash fuse/relay box.

5. Remove the mounting bolt and slide the under-dash fuse/relay box (A) down from the bracket (B).

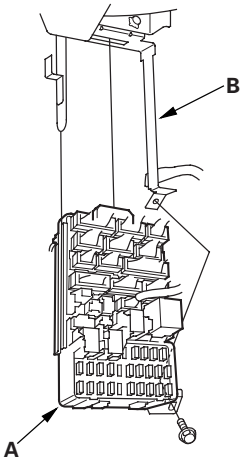

6. Disconnect the connectors from the back of the under-dash fuse/relay box, and remove the fuse/relay box.

   NOTE: The SRS connector is a spring-loaded lock type (see page 23-15).

Installation

1. Install the under-dash fuse/relay box in the reverse order of removal and connect all connectors to the under-dash fuse/relay box.

2. Install the dashboard lower cover.

3. Connect both the negative cable and positive cable to the battery.

4. Enter the anti-theft code for the radio, then enter the customer's radio station presets.

5. Reset the power window control unit (see page 22-148).

6. Confirm that all systems work properly.

Battery Test

⚠ WARNING

A battery can explode if you do not follow the proper procedure, causing serious injury to anyone nearby. Follow all procedures carefully and keep sparks and open flames away from the battery.

Use either a JCI or Bear ARBST tester, and follow the manufacturer's procedures. If you don't have one of these computerized testers, follow this conventional test procedure:

1. Be sure the temperature of the electrolyte is between 70 ℉ (21 ℃) and 100 ℉ (38 ℃).

2. Inspect the battery case for cracks or leaks.

   - If the case is damaged, replace the battery. ■
   - If the case looks OK, go to step 3.

3. Check the indicator EYE.

   - If the EYE indicates the battery is charged, go to step 4.
   - If the EYE indicates a low charge, go to step 7.

4. Apply a 300 A load for 15 seconds to remove the surface charge.

5. Wait 15 seconds, then apply a test load of 280 A for 15 seconds.

6. Record battery voltage.

   - If voltage is above 9.6 V, the battery is OK. ■
   - If voltage is below 9.6 V, go to step 7.

7. Charge the battery on High (40 A) until the EYE shows the battery is charged, plus an additional 30 minutes. If the battery charge is very low, it may be necessary to bypass the charger's polarity protection circuitry.

   - If the EYE indicates the battery is charged within 3 hours, the battery is OK. ■
   - If the EYE indicates the battery is not charged within 3 hours, replace the battery. ■

Power Relay Test

Use this chart to identify the type of relay, then do the test listed for it.

NOTE: For the turn signal/hazard relay input test (see page 22-98).

Relay	Test
A/C compressor clutch relay	Normally-open type A
Air fuel ratio sensor relay	
A/C condenser fan relay	
Headlight relay 1	
Headlight relay 2	
Horn relay	
Ignition coil relay*	
Power window relay	
Radiator fan relay	
Reverse relay (A/T)	
Rear accessory power socket relay (USA)	
Seat heater relay (Canada)	
Security horn relay	
Starter cut relay	
Taillight relay	
Daytime running lights relay (Canada)	
PGM-FI main relay 1	
PGM-FI main relay 2	
Blower motor relay	Normally-open type B
Rear BOSE stereo amplifier relay	
Rear window defogger relay	
Key interlock relay	Five terminal type
Moonroof close relay	
Moonroof open relay	
Shift lock relay (A/T)	

*: '05-06 models

Normally-open type A

Check for continuity between the terminals.

- There should be continuity between the No. 1 and No. 2 terminals when power and ground are connected to the No. 3 and No. 4 terminals.
- There should be no continuity between the No. 1 and No. 2 terminals when power is disconnected.

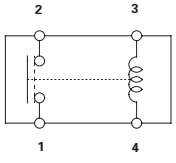

type 1:

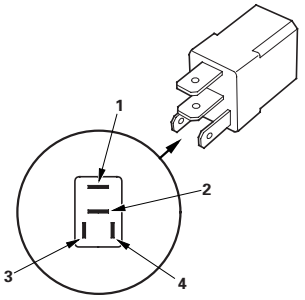

type 2:

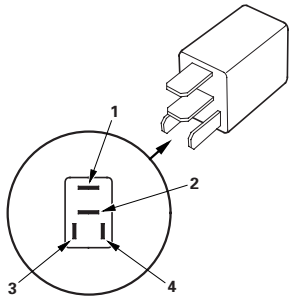

PGM-FI main relay 1
PGM-FI main relay 2
type 1:

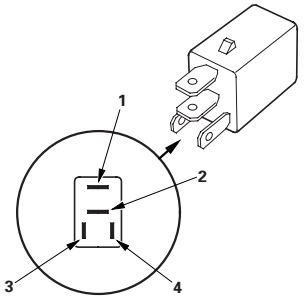

type 2:

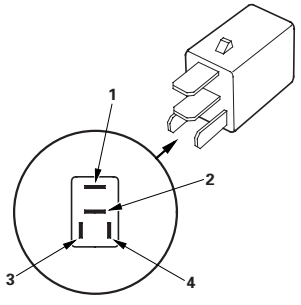

Normally-open type B

Check for continuity between the terminals.

- There should be continuity between the No. 1 and No. 3 terminals when power and ground are connected to the No. 2 and No. 4 terminals.
- There should be no continuity between the No. 1 and No. 3 terminals when power is disconnected.

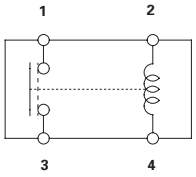

Blower motor relay
type 1:

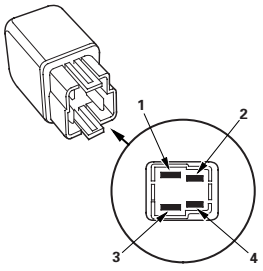

type 2:

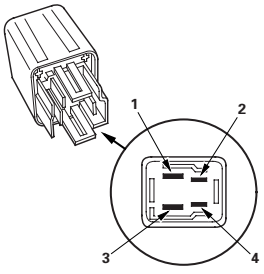

Rear window defogger relay

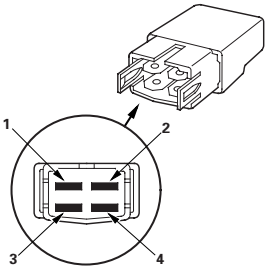

Rear BOSE stereo amplifier relay

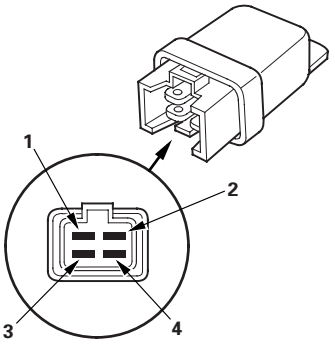

Five-terminal type

Check for continuity between the terminals.

- There should be continuity between the No. 1 and No. 2 terminals when power and ground are connected to the No. 3 and No. 5 terminals.
- There should be continuity between the No. 1 and No. 4 terminals when power is disconnected.

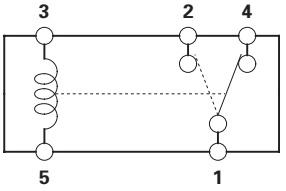

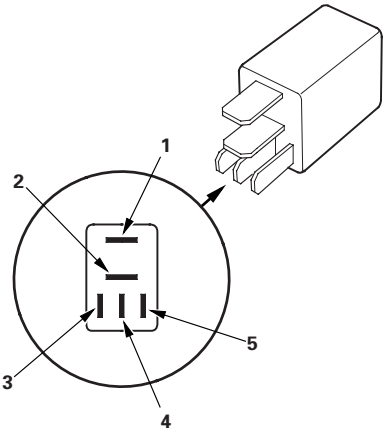

Test

SRS components are located in this area. Review the SRS component locations (see page 23-10) and precautions and procedures (see page 23-11) before performing repairs or servicing.

1. Remove the dashboard lower cover (see page 20-63)

2. Disconnect the 5P connector from the under-dash fuse/relay box.

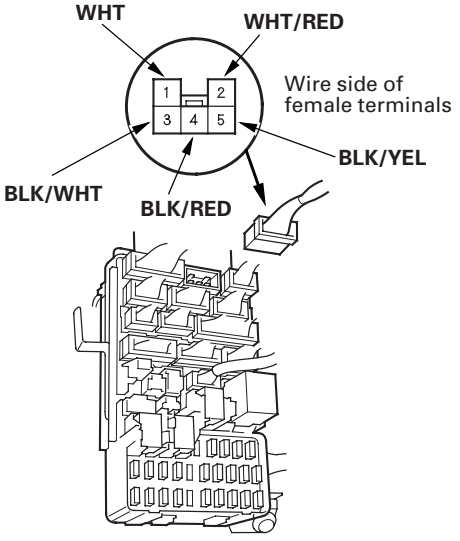

3. Check for continuity between the terminals in each switch position according to the table.

Position \ Terminal	WHT/RED (ACC)	WHT (BAT)	BLK/YEL (IG1)	BLK/RED (IG2)	BLK/WHT (ST)
0 (LOCK)					
I (ACC)	○—○				
II (ON)	○—○	○—○		○—○	
III (START)		○—○	○—○		○—○

4. If the continuity checks do not agree with the table, replace the steering lock assembly (see page 17-29).

Component Location Index

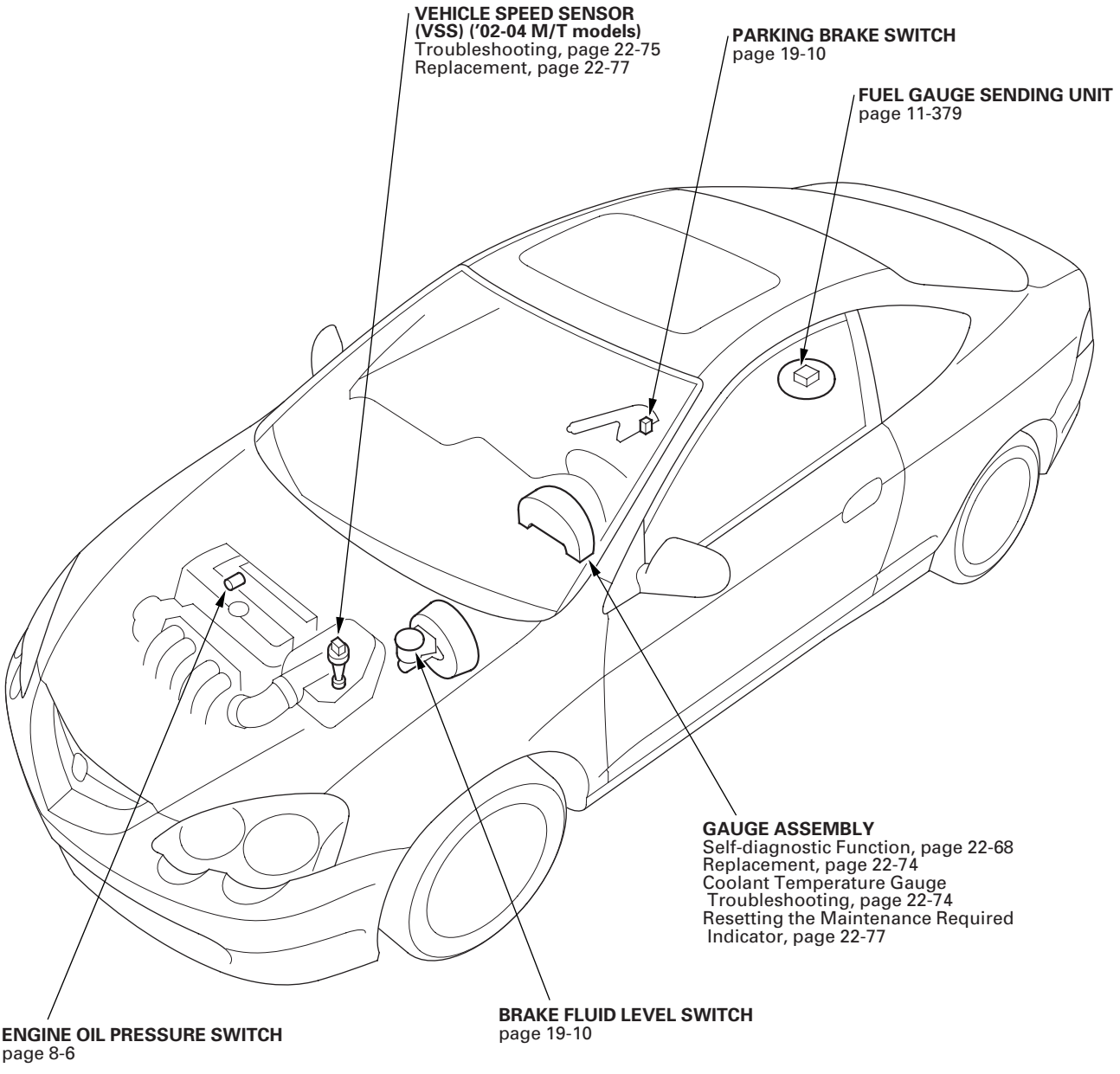

(cont'd)

Component Location Index (cont'd)

Gauge/Terminal Location Index:

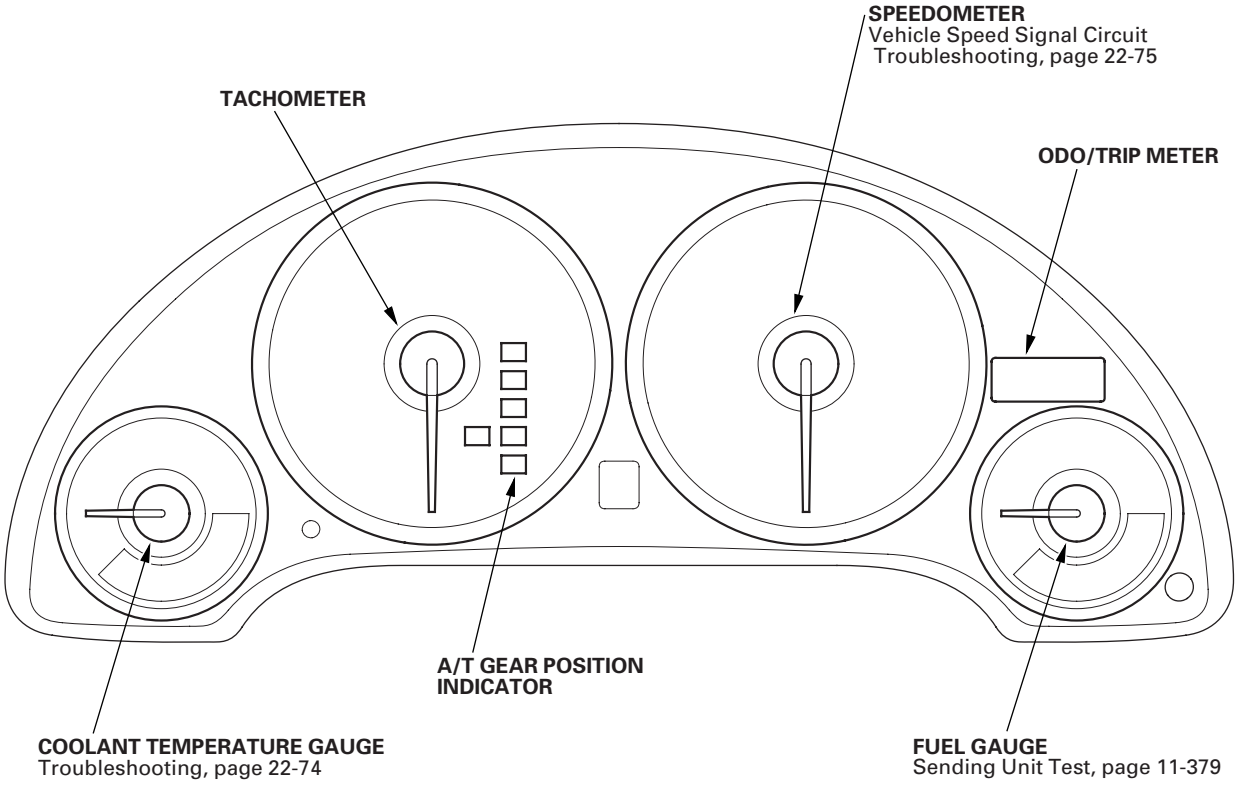

’02-04 models

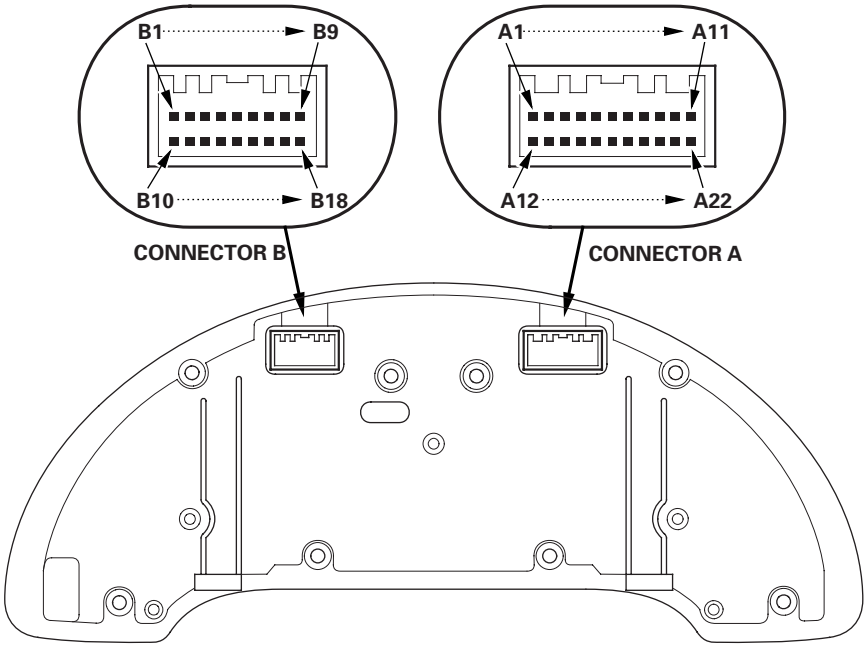

’05-06 models

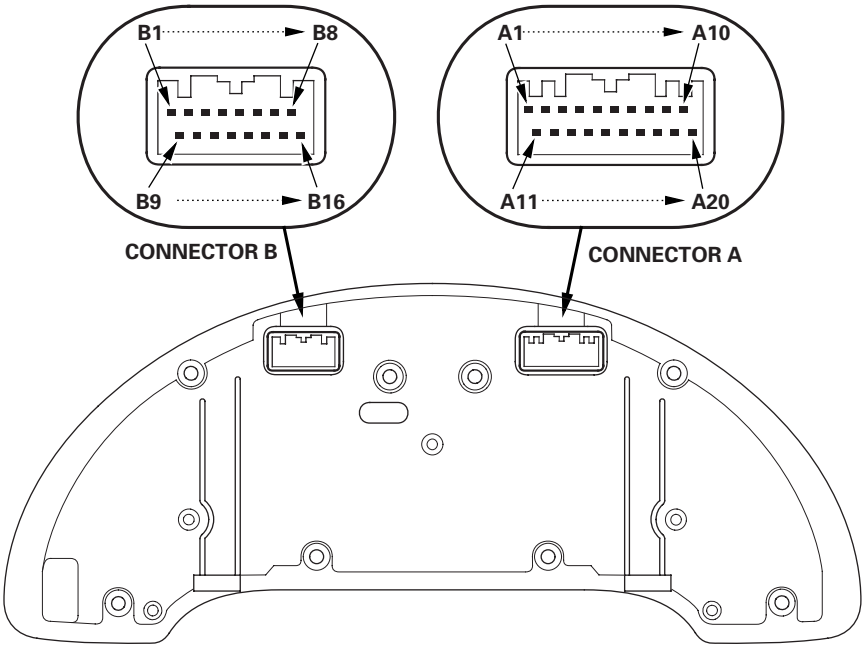

Self-diagnostic Function

The gauge assembly has a self-diagnostic function.
- The beeper drive circuit check
- The indicator drive circuit check
- The LCD segments check
- The gauges drive circuit check (speedometer, tachometer, fuel gauge, coolant temperature gauge)
- The communication line check (the coolant temperature signal line between the gauge and ECM/PCM)

Entering the Self-diagnostic Function

Before doing the self-diagnostic function, check the No. 9 (7.5 A) fuse in the under-hood fuse/relay box and No. 10 (7.5 A) fuse in the under-dash fuse/relay box, then check for ECM/PCM DTC(s). Troubleshoot and repair the cause of the DTC(s) first.

1. Push and hold the trip/reset button.
2. Turn the lighting switch ON.
3. Turn the ignition switch ON (II).
4. Within 5 sec., turn the lighting switch OFF, then ON and OFF again.
5. Within 5 sec., release the trip/reset button, then push and release the button three times repeatedly.

NOTE:
- While in the self-diagnostic mode, the dash lights brightness controller operates normally.
- While in the self-diagnostic mode, the trip/reset button is used to start the beeper drive circuit test and the gauge drive circuit check.
- If the vehicle speed exceeds 1.2 mph (2 km/h) or the ignition switch is turned OFF, the self-diagnostic mode ends.

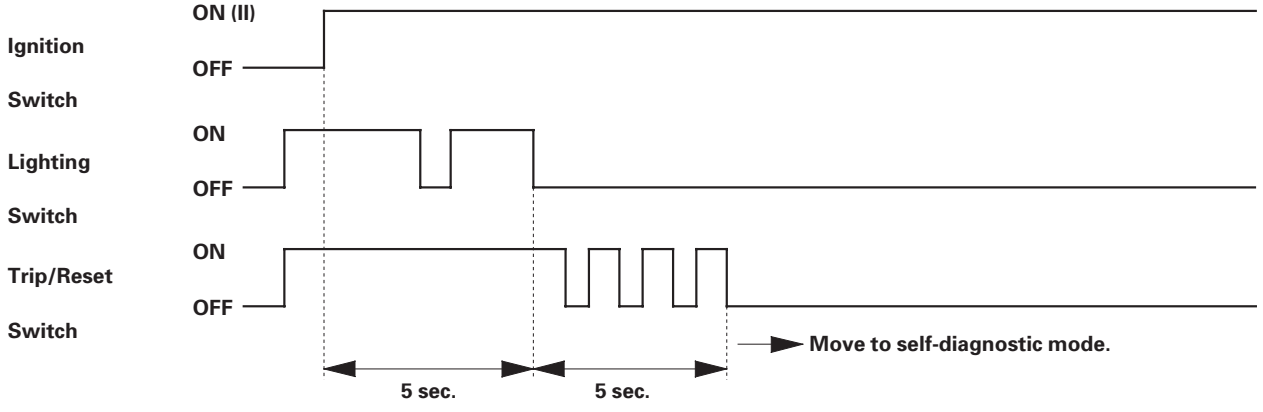

The Beeper Drive Circuit Check

When entering the self-diagnostic mode, the beeper sounds five times.

The Indicator Drive Circuit Check

When entering the self-diagnostic mode, the following indicators and sequential sportshift mode segments blink.
Seat belt indicator, Door/hatch indicator, Brake system light, Charging system light, Low fuel indicator, Maintenance required indicator (USA), Washer fluid level indicator (Canada),
A/T gear position indicator (except P, R, N) and sequential sportshift mode segments.

The LCD Segment Check

When entering the self-diagnostic mode, the odo/trip segment blinks five times.

The Gauge Drive Circuit Check

When entering the self-diagnostic mode, the speedometer, the tachometer, the fuel gauge, and the coolant temperature gauge needles move from the minimum position to maximum position, then return to the minimum position.
NOTE: After the beeper stops sounding and the gauge needles return to the minimum position, pushing the trip/reset button starts the beeper drive circuit check (one beep), and the gauge drive circuit check again.
The check cannot be started until the gauge needles return to the minimum position.

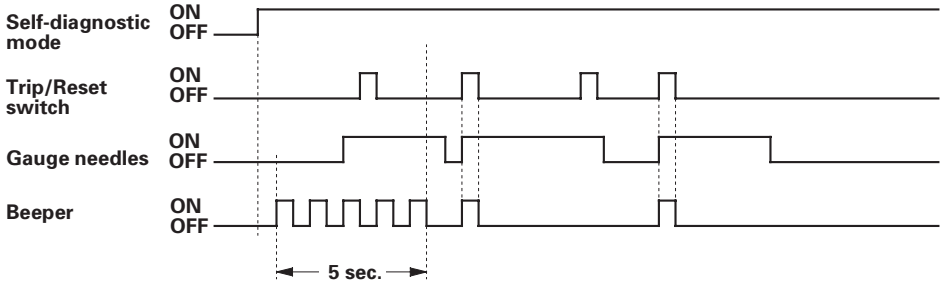

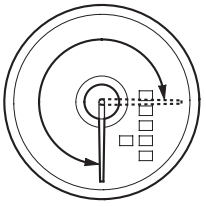

The needles sweep from the minimum position to the maximum position, then return to the minimum position.

The Communication Line Check

In the self-diagnostic mode, after the odo/trip LCD segments check, the self-diagnostic starts the communication line check.
If all segments come on, the communication line is OK.
If the word ''Error'' is indicated, there is a malfunction in the communication line between the gauge assembly, the multiplex control unit, the keyless control unit, and the ECM/PCM.

Normal:

Faulty:

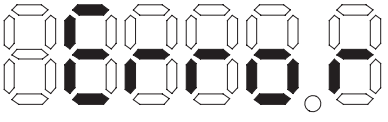

Ending the Self-diagnostic Function

Turn the ignition switch OFF.
NOTE: If the vehicle speed exceeds 1.2 mph (2 km/h), the self-diagnostic function ends.
If any of the checks do not function as specified, replace the gauge assembly.

Circuit Diagram

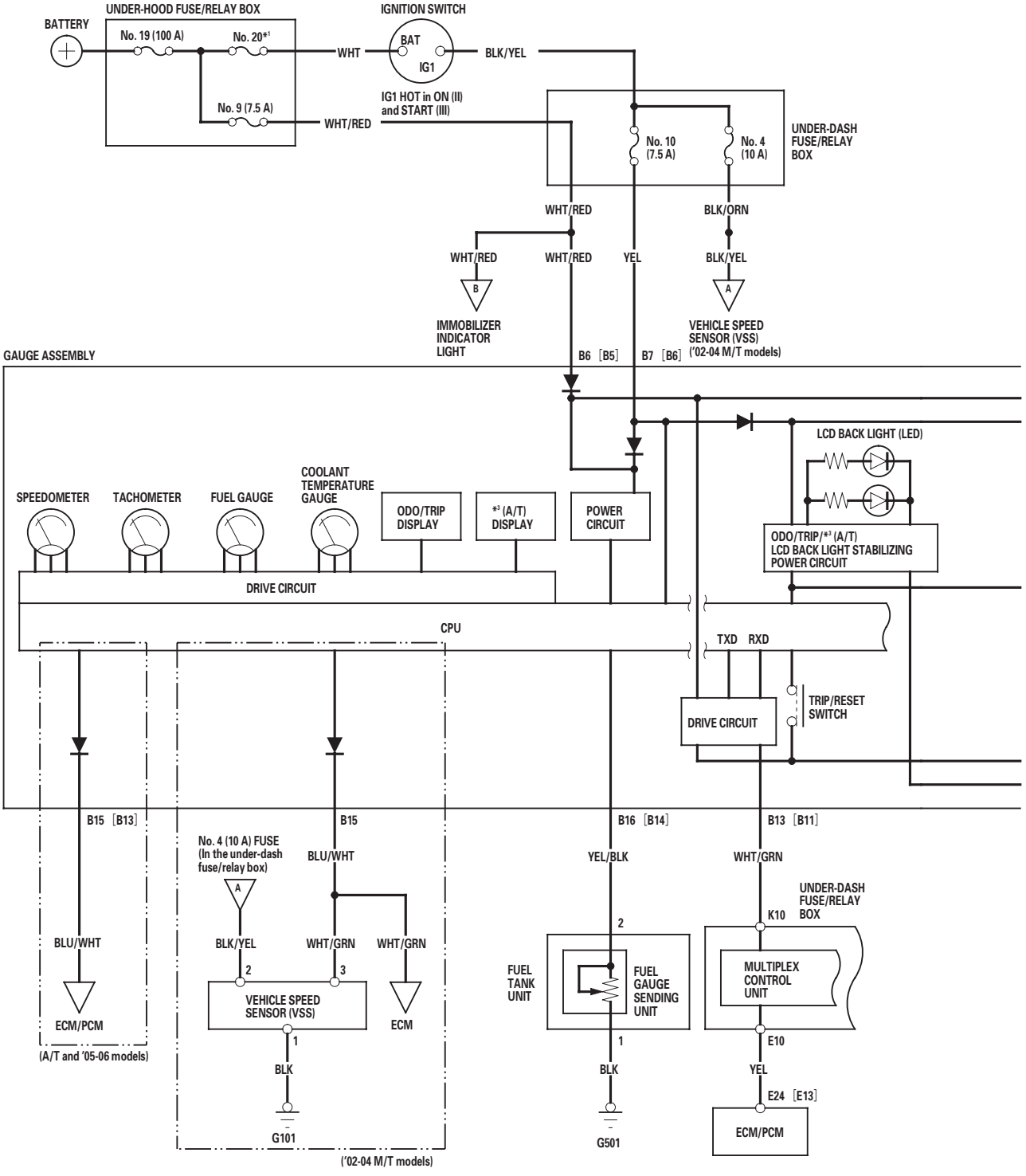

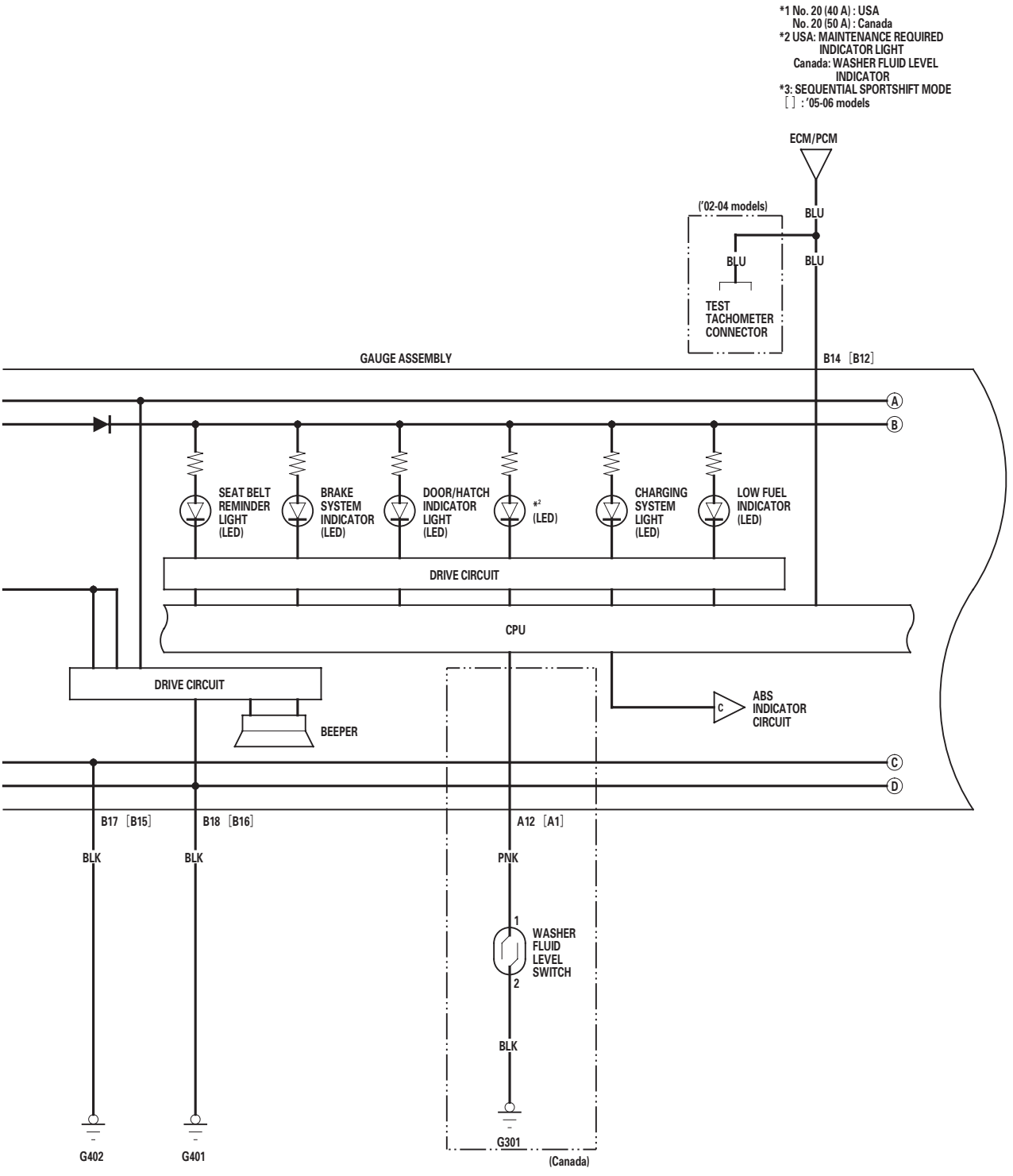
*1 No. 20 (40 A) : USA
No. 20 (50 A) : Canada
*2 USA: MAINTENANCE REQUIRED INDICATOR LIGHT
Canada: WASHER FLUID LEVEL INDICATOR
*3: SEQUENTIAL SPORTSHIFT MODE
[ ] : '05-06 models
ECM/PCM
('02-04 models)
BLU
BLU
BLU
TEST TACHOMETER CONNECTOR
GAUGE ASSEMBLY
B14 [B12]
A
B
SEAT BELT REMINDER LIGHT (LED)
BRAKE SYSTEM INDICATOR (LED)
DOOR/HATCH INDICATOR LIGHT (LED)
*2 (LED)
CHARGING SYSTEM LIGHT (LED)
LOW FUEL INDICATOR (LED)
DRIVE CIRCUIT
CPU
DRIVE CIRCUIT
BEEPER
C
ABS INDICATOR CIRCUIT
C
D
B17 [B15]
B18 [B16]
A12 [A1]
BLK
BLK
PNK
1
WASHER FLUID LEVEL SWITCH
2
BLK
G402
G401
G301
(Canada)

(cont'd)

Circuit Diagram (cont'd)

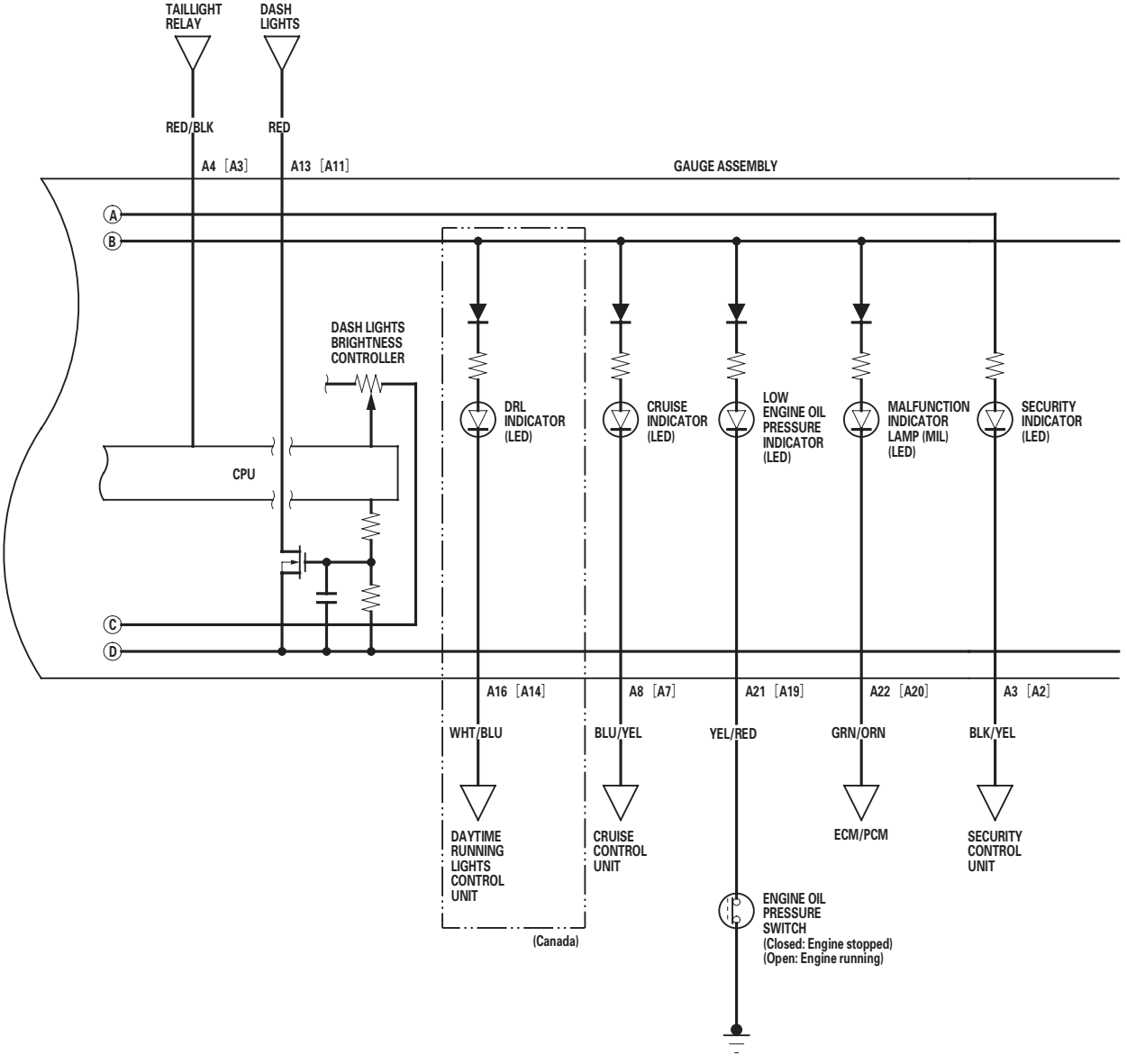

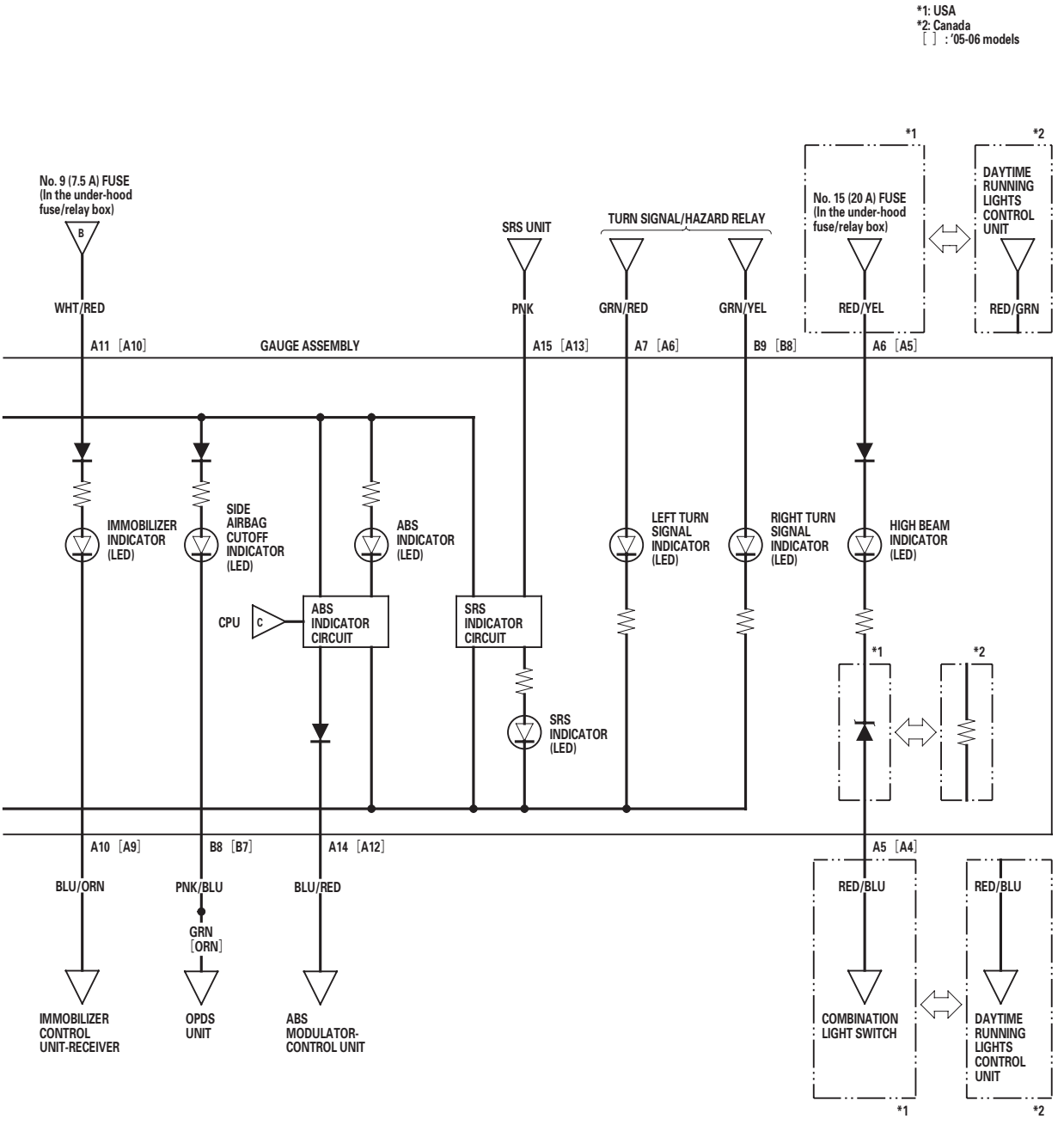
*1: USA
*2: Canada
[ ] : '05-06 models
No. 9 (7.5 A) FUSE
(In the under-hood
fuse/relay box)
B
WHT/RED
A11 [A10]
GAUGE ASSEMBLY
SRS UNIT
PNK
A15 [A13]
TURN SIGNAL/HAZARD RELAY
GRN/RED
A7 [A6]
GRN/YEL
B9 [B8]
No. 15 (20 A) FUSE
(In the under-hood
fuse/relay box)
RED/YEL
A6 [A5]
DAYTIME
RUNNING
LIGHTS
CONTROL
UNIT
RED/GRN
IMMOBILIZER
INDICATOR
(LED)
SIDE
AIRBAG
CUTOFF
INDICATOR
(LED)
ABS
INDICATOR
(LED)
CPU
C
ABS
INDICATOR
CIRCUIT
SRS
INDICATOR
CIRCUIT
SRS
INDICATOR
(LED)
LEFT TURN
SIGNAL
INDICATOR
(LED)
RIGHT TURN
SIGNAL
INDICATOR
(LED)
HIGH BEAM
INDICATOR
(LED)
A10 [A9]
BLU/ORN
B8 [B7]
PNK/BLU
GRN
[ORN]
A14 [A12]
BLU/RED
A5 [A4]
RED/BLU
RED/BLU
IMMOBILIZER
CONTROL
UNIT-RECEIVER
OPDS
UNIT
ABS
MODULATOR-
CONTROL UNIT
COMBINATION
LIGHT SWITCH
DAYTIME
RUNNING
LIGHTS
CONTROL
UNIT

Gauge Assembly Replacement

1. Remove the driver's dashboard lower cover (see page 20-63), then remove the upper column cover (see page 17-25).

2. Place a clean shop towel under the gauge assembly to prevent scratching it and the steering column cover.

3. Remove the two mounting screws from the gauge assembly (A).

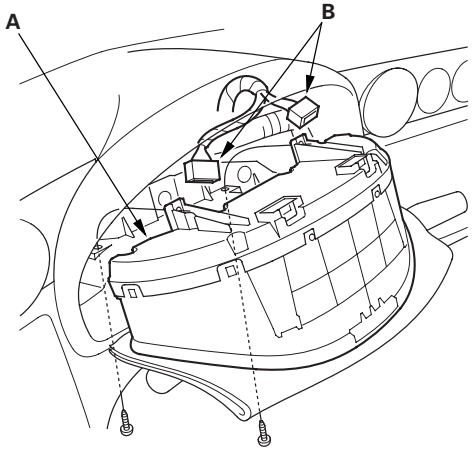

4. Disconnect the connectors (B), and remove the gauge assembly.

5. Install the gauge assembly in the reverse order of removal.

Coolant Temperature Gauge Troubleshooting

Before testing, check the No. 9 (7.5 A) fuse in the under-hood fuse/relay box and the No. 10 (7.5 A) fuse in the under-dash fuse/relay box.

1. Start the engine, and check the Malfunction Indicator Lamp (MIL).

   Does the MIL come on?

   YES—Troubleshoot the cause of the PGM-FI system DTC (see page 11-3), and recheck. ■
   NO—Go to step 2.

2. Check for a multiplex control unit DTC (see page 22-189).

   Is a DTC indicated?

   YES—Troubleshoot the cause of the multiplex control unit DTC (see page 22-189), and recheck. ■
   NO—Go to step 3.

3. Do the communication line check with the self-diagnostic procedure (see page 22-68).

   Is the word ''Error'' indicated on the odo/trip display?

   YES—The gauge cannot receive the signal from the multiplex control unit and the ECM/PCM. Check for an open in the WHT/GRN wire (gauge connector terminal B13 or B11) or YEL wire (under-dash fuse/relay box terminal E10 and ECM/PCM terminal (E24 or E13). ■
   NO—Go to step 4.

4. Does the gauge drive circuit check with the self-diagnostic procedure (see page 22-68).

   Does the temperature gauge needle sweep from the minimum position to the maximum, then return to the minimum position?

   YES—Go to step 5.
   NO—Replace the gauge assembly. ■

5. Substitute a known-good ECM/PCM, and recheck.

   Did the symptom/indication go away?

   YES—Replace the ECM/PCM. ■
   NO—Substitute a known-good gauge assembly. If the symptom/indication goes away, replace the gauge assembly. ■

Vehicle Speed Signal Circuit Troubleshooting

Special Tools Required
Test harness 07LAJ-PT3020A

'02-04 M/T models

Before testing, check the ECM for DTCs and inspect the No. 4 (10 A) and No. 10 (7.5 A) fuses in the under-dash fuse/relay box.

1. Disconnect the 3P connector from the vehicle speed sensor (VSS) (A).

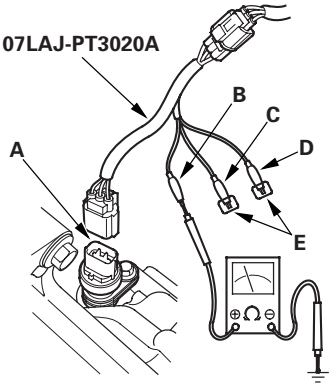

2. Connect the test harness only to the engine wire harness.

3. Connect the RED test harness clip (B) to the positive probe of an ohmmeter. Cover the white (C) and green (D) test harness with protective tape (E).

4. Check for continuity between the RED test harness clip and body ground.

   Is there continuity?

   YES—Go to step 5.

   NO—Repair open in the BLK wire between the VSS and G101.■

5. Connect the WHT test harness clip (B) to the positive probe of a voltmeter, and connect the RED test harness clip (C) to the negative probe.

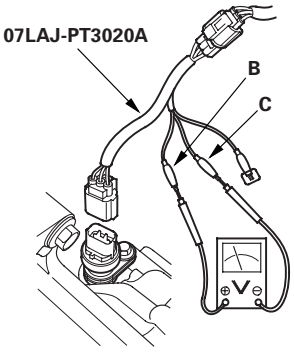

6. Turn the ignition switch ON (II).

   Is there battery voltage?

   YES—Go to step 7.

   NO—Repair open in the BLK/YEL wire between the VSS and the under-dash fuse/relay box.■

7. Disconnect the WHT test harness clip (B).

8. Connect the GRN test harness clip (D) to the positive probe of a voltmeter.

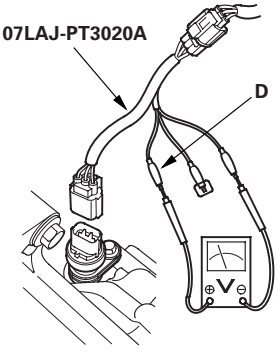

   Is there 5 V or battery voltage?

   YES—Go to step 9.

   NO—Repair short in the BLU/WHT [WHT/GRN] wire between the VSS, the gauge assembly, the cruise control unit and the ECM.■

9. Turn the ignition switch OFF.

(cont'd)

Vehicle Speed Signal Circuit Troubleshooting (cont'd)

10. Connect the other test harness connector (A) to the VSS (B).

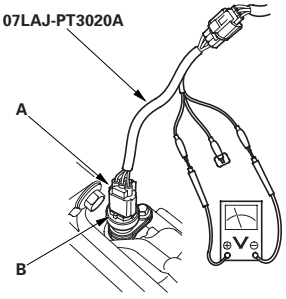

11. Raise the front of the vehicle, and make sure it is securely supported.

12. Put the vehicle in neutral with the ignition switch ON (II).

13. Slowly rotate one wheel with the other wheel blocked.

    Does voltage pulse from 0 to about 5 V?

    YES—Go to step 14.

    NO—Replace the VSS. ■

14. Disconnect the 18P connector ''B'' from the gauge assembly.

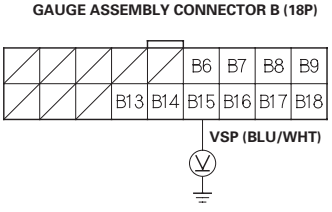

Wire side of female terminals

15. Touch the voltmeter positive probe to the gauge assembly B15 terminal, and connect the negative probe to body ground.

16. Slowly rotate one wheel with the other wheel blocked.

    Does voltage pulse from 0 to about 5 V?

    YES—Replace the speedometer assembly. ■

    NO—Repair open in the BLU/WHT [WHT/GRN] wire between the VSS and the speedometer. ■

A/T and '05-06 M/T models

Before testing, check the No. 9 (7.5 A) fuse in the under-hood fuse/relay box and the No. 10 (7.5 A) fuse in the under-dash fuse/relay box.

1. Start the engine and check the Malfunction Indicator Lamp (MIL).

   Does the MIL come on?

   YES—Check the ECM/PCM's DTC with the HDS (see page 11-3), and recheck. ■

   NO—Go to step 2.

2. Check the multiplex control unit DTC (see page 22-189).

   Is the DTC indicated?

   YES—Troubleshoot the DTC (see page 22-189), and recheck. ■

   NO—Inspect the connector and socket terminals of the gauge assembly connectors. If the terminals look OK, replace the gauge assembly. ■

VSS Replacement

M/T only ('02-04 models)

1. Remove the air cleaner (see page 11-407).
2. Disconnect the 3P connector from the vehicle speed sensor (VSS).

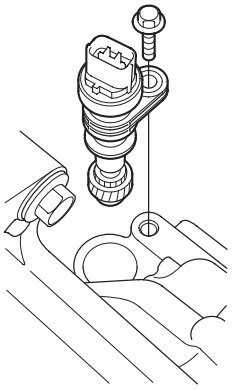

3. Remove the mounting bolt, then remove the VSS.
4. Install the VSS in the reverse order of removal.

Resetting the Maintenance Required Indicator

How to Reset

Push and hold the trip/reset button, turn the ignition switch ON (II), and continue to hold the button for more than 10 seconds.

Blinking Pattern:

Miles (km)	Maintenance Reminder Light
At 7,900 (12,640) to 8,100 (12,960)	Blinks for 10 seconds when the ignition switch is turned ON (II).
At 9,900 (15,840) to 10,000 (16,160)	Comes on and stays on while the ignition switch is ON (II).

Component Location Index

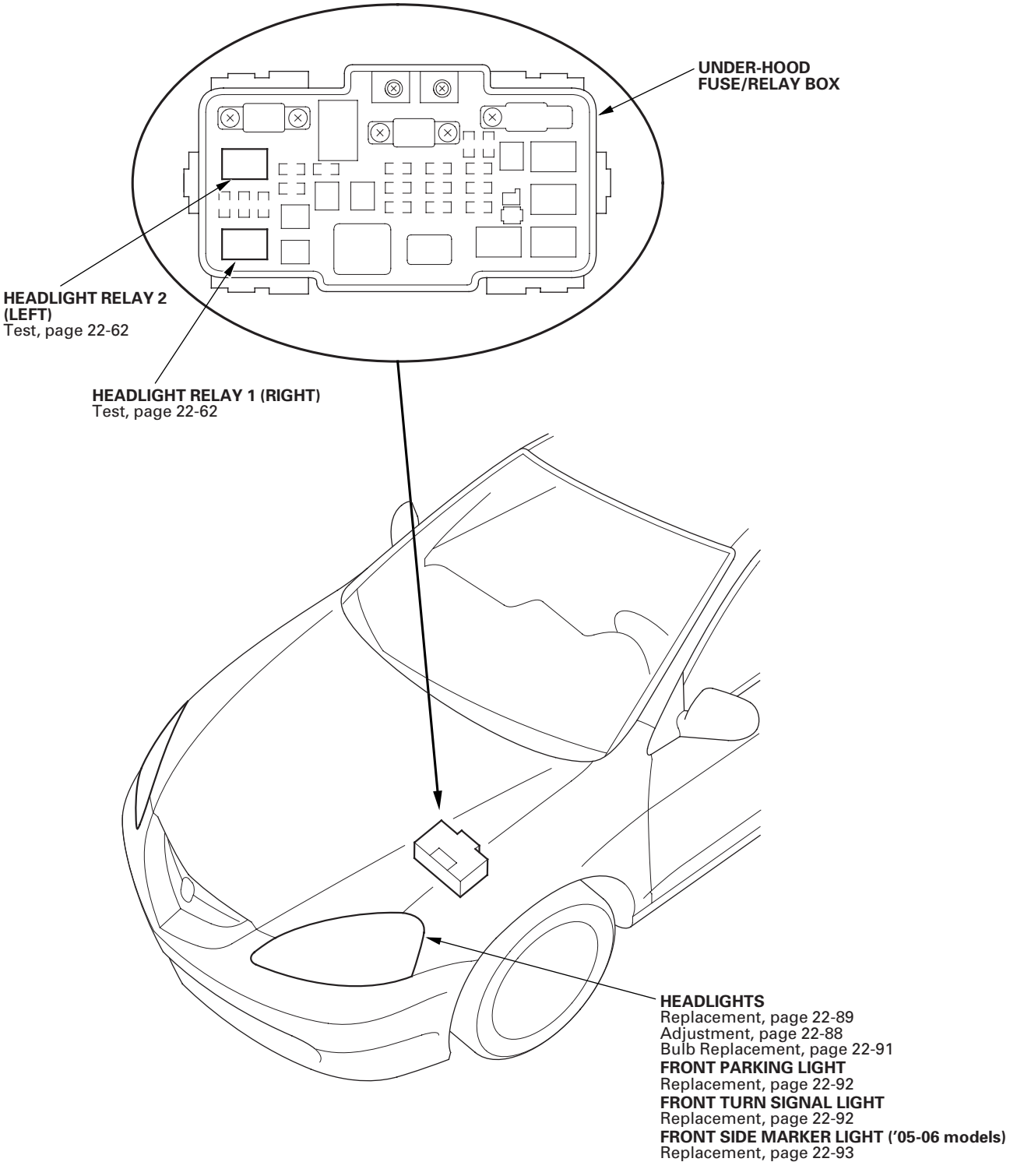

’02-04 models

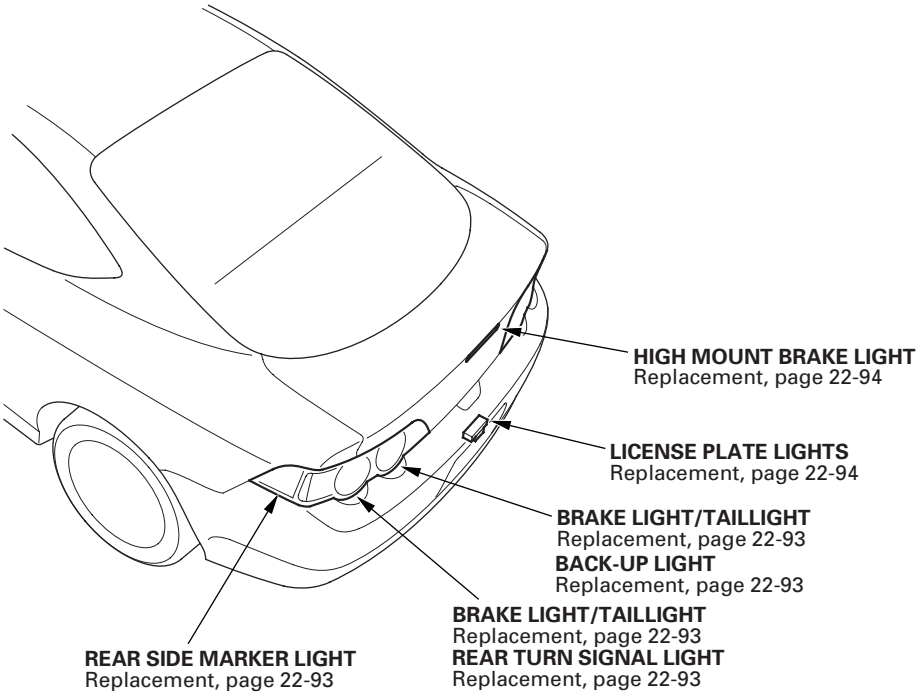

’05-06 models

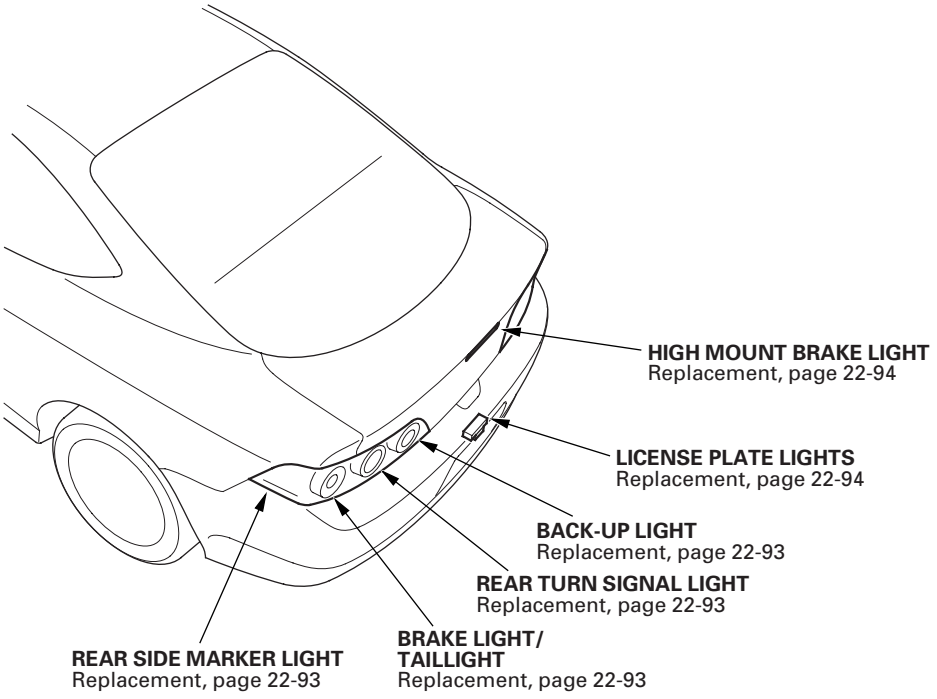

(cont’d)

Component Location Index (cont'd)

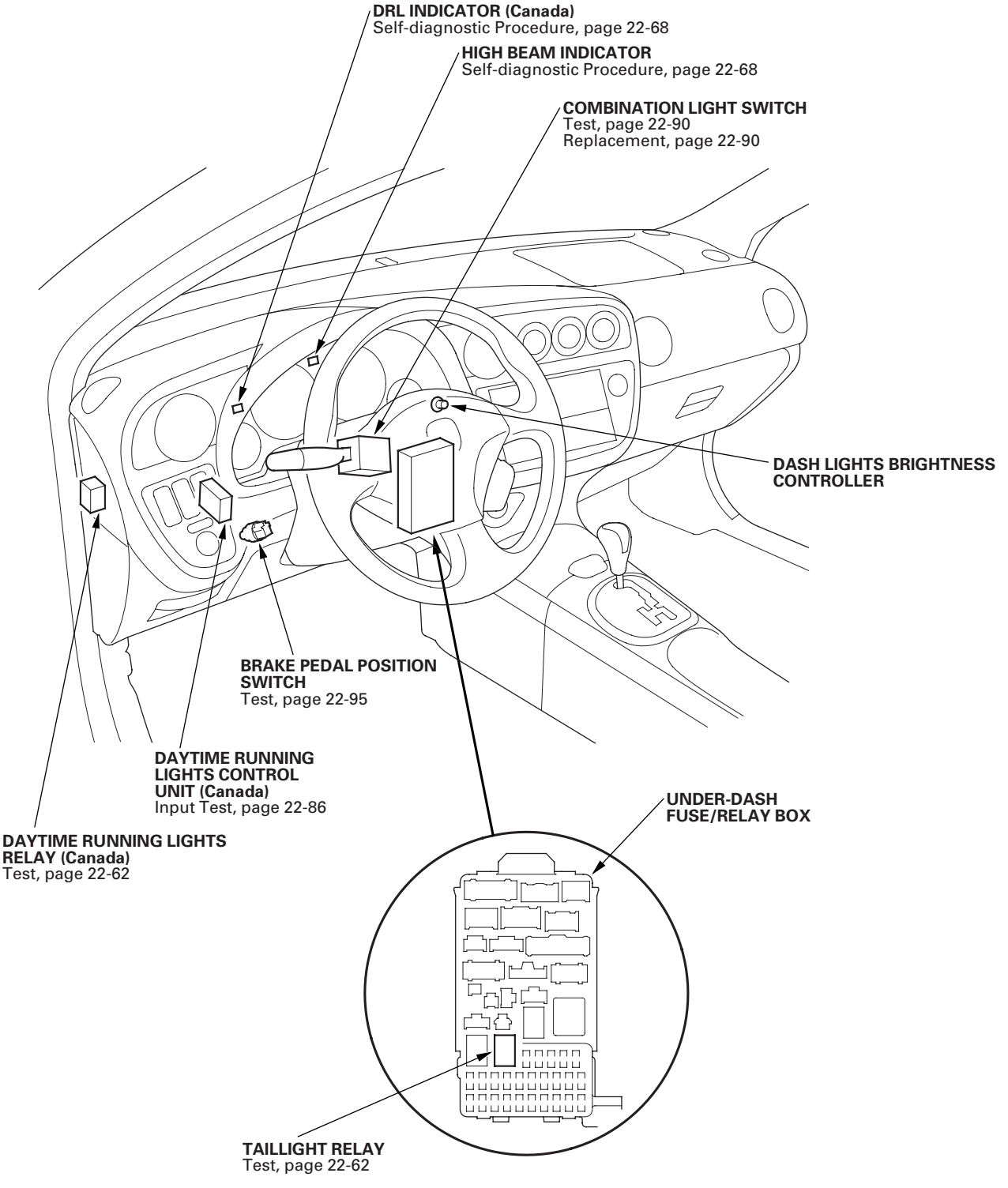

Circuit Diagram

USA

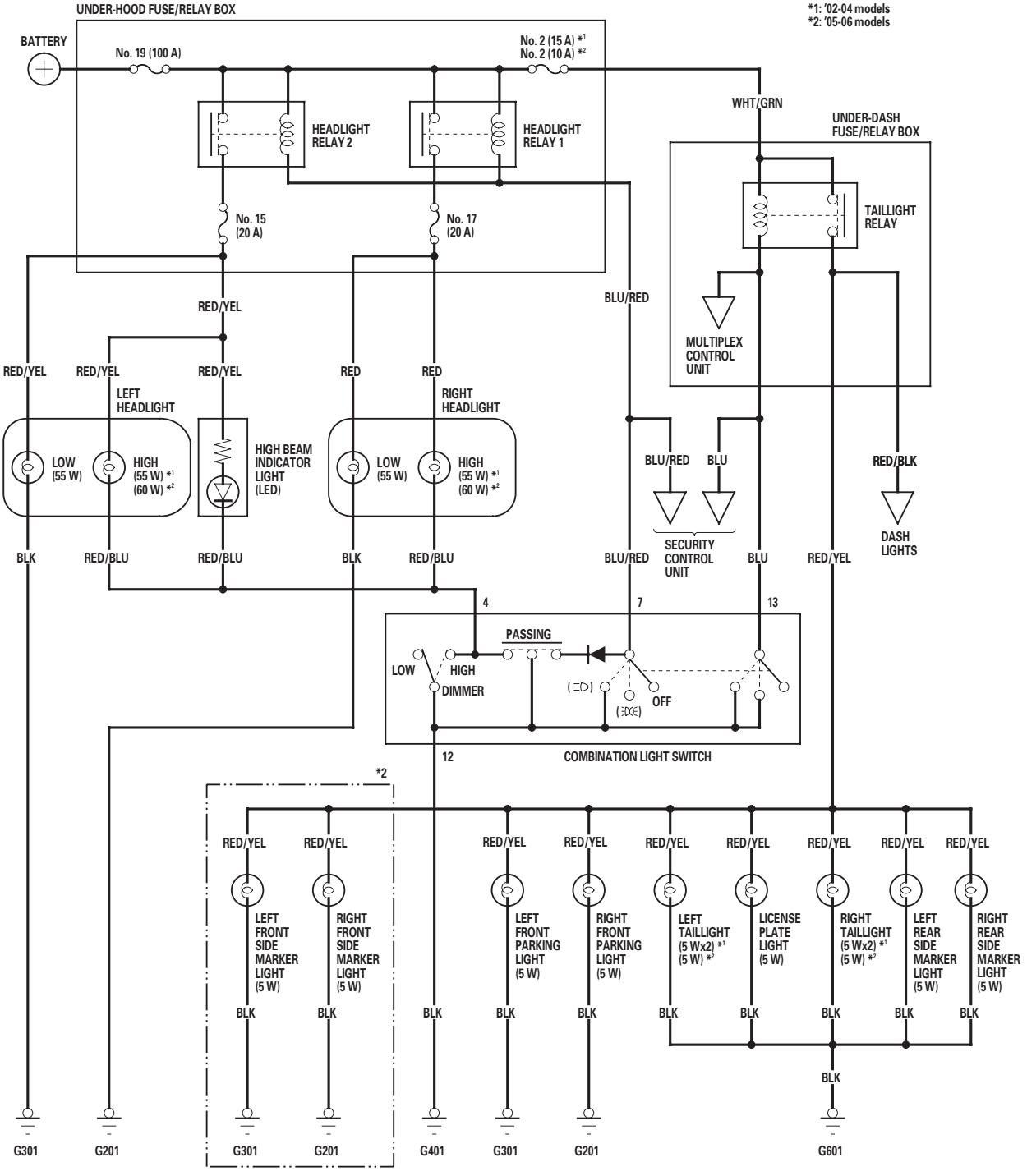

Circuit Diagram (cont'd)

Canada

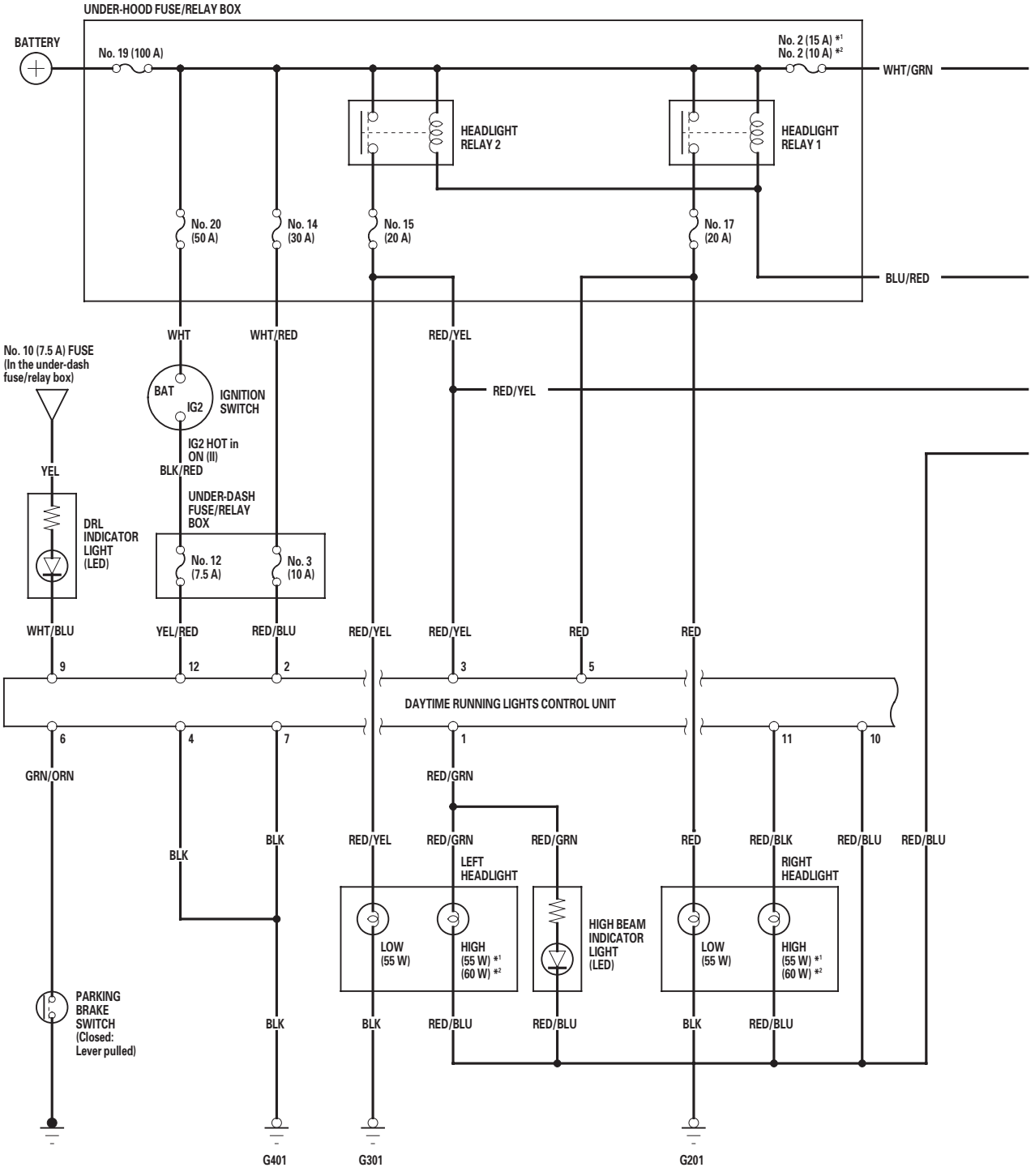

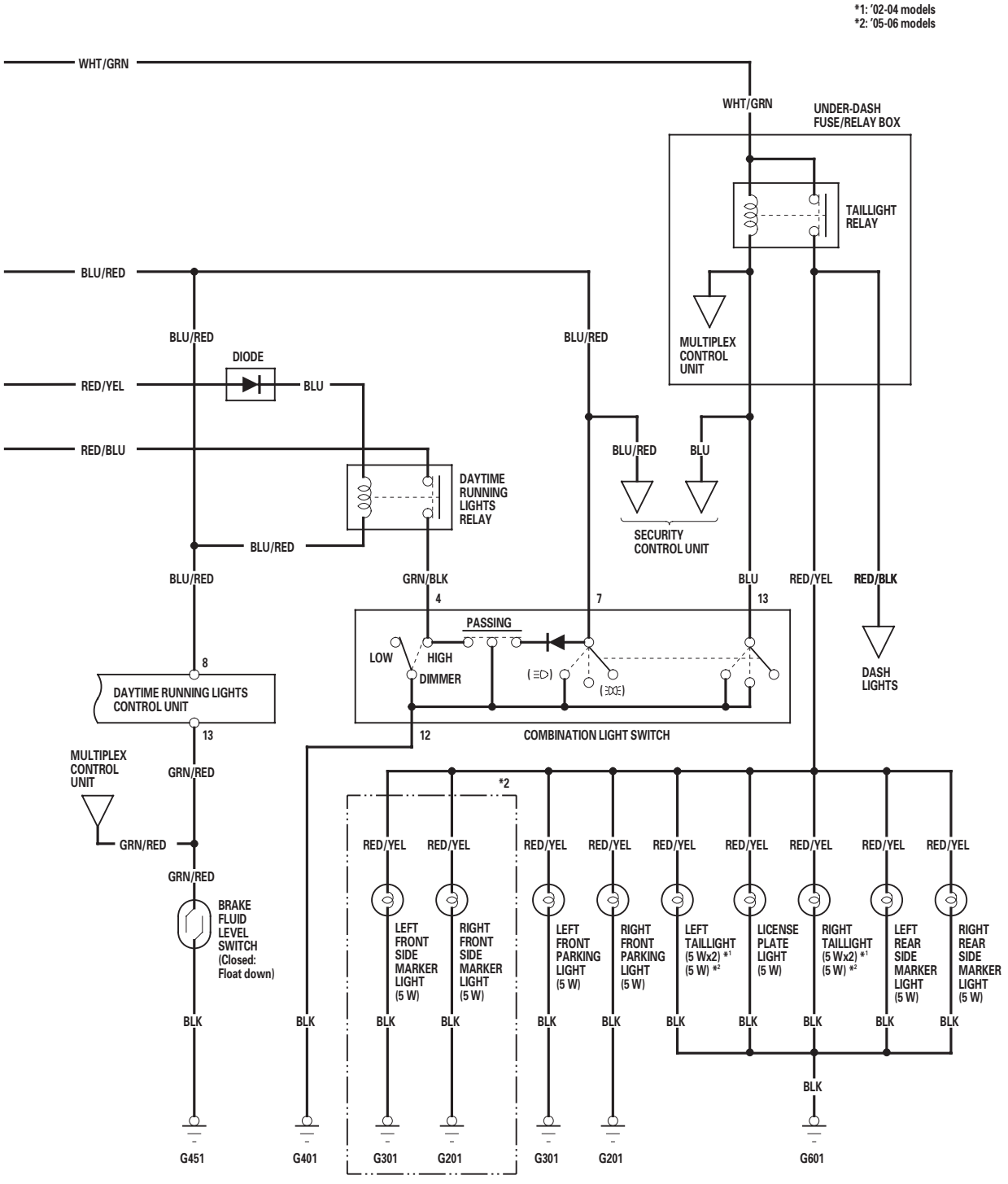
*1: '02-04 models
*2: '05-06 models
WHT/GRN
WHT/GRN
UNDER-DASH FUSE/RELAY BOX
TAILLIGHT RELAY
MULTIPLEX CONTROL UNIT
BLU/RED
BLU/RED
BLU/RED
DIODE
RED/YEL
BLU
RED/BLU
DAYTIME RUNNING LIGHTS RELAY
BLU/RED
BLU/RED
BLU
SECURITY CONTROL UNIT
BLU/RED
GRN/BLK
BLU
RED/YEL
RED/BLK
4
7
13
PASSING
LOW
HIGH
DIMMER
DASH LIGHTS
8
DAYTIME RUNNING LIGHTS CONTROL UNIT
13
12
COMBINATION LIGHT SWITCH
MULTIPLEX CONTROL UNIT
GRN/RED
*2
GRN/RED
GRN/RED
RED/YEL
RED/YEL
RED/YEL
RED/YEL
RED/YEL
RED/YEL
RED/YEL
RED/YEL
RED/YEL
BRAKE FLUID LEVEL SWITCH (Closed: Float down)
LEFT FRONT SIDE MARKER LIGHT (5 W)
RIGHT FRONT SIDE MARKER LIGHT (5 W)
LEFT FRONT PARKING LIGHT (5 W)
RIGHT FRONT PARKING LIGHT (5 W)
LEFT TAILLIGHT (5 Wx2) *1 (5 W) *2
LICENSE PLATE LIGHT (5 W)
RIGHT TAILLIGHT (5 Wx2) *1 (5 W) *2
LEFT REAR SIDE MARKER LIGHT (5 W)
RIGHT REAR SIDE MARKER LIGHT (5 W)
BLK
BLK
BLK
BLK
BLK
BLK
BLK
BLK
BLK
BLK
BLK
BLK
BLK
G451
G401
G301
G201
G301
G201
G601

Circuit Diagram - Brake Lights

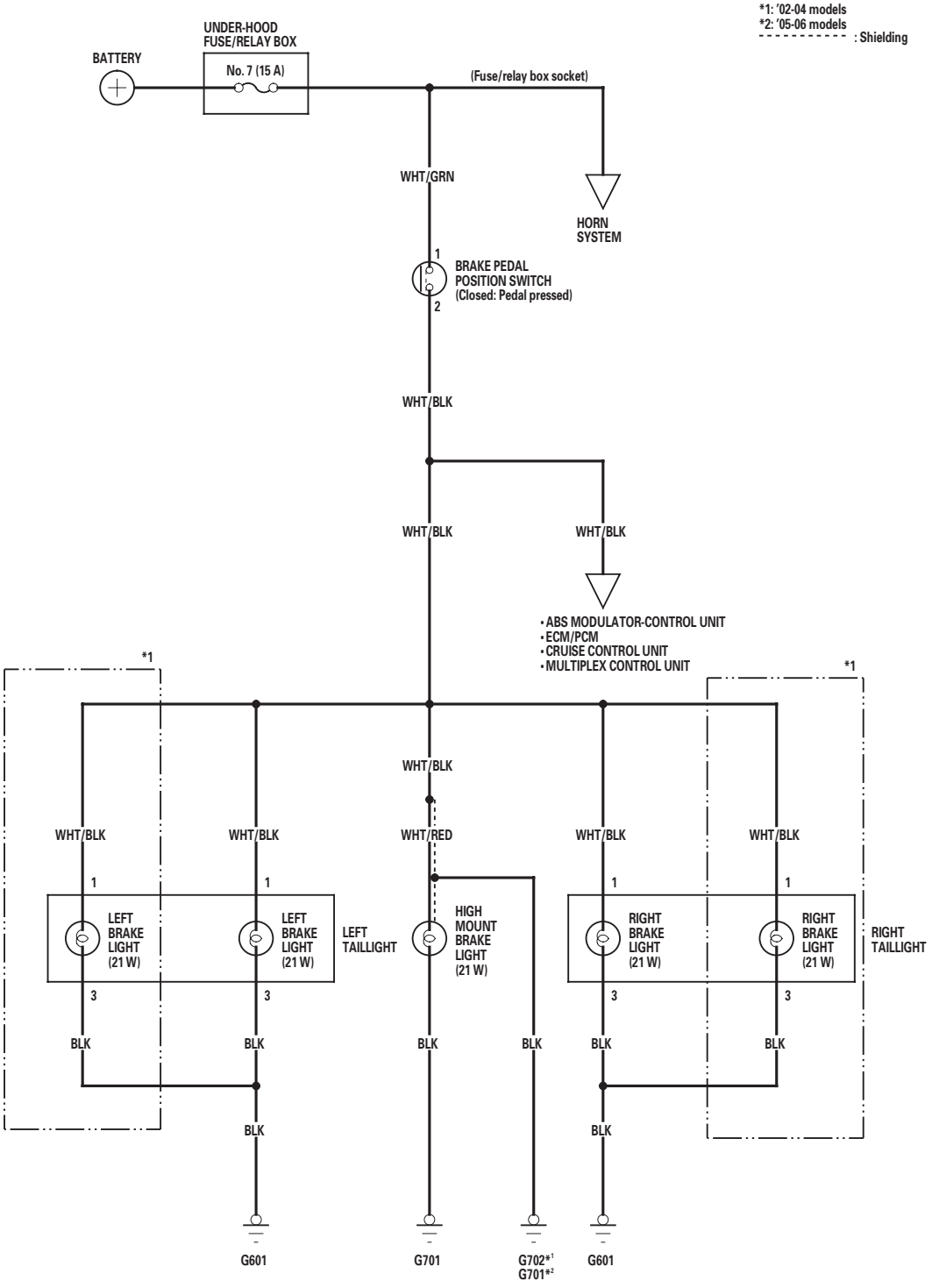

Circuit Diagram - Back-up Lights

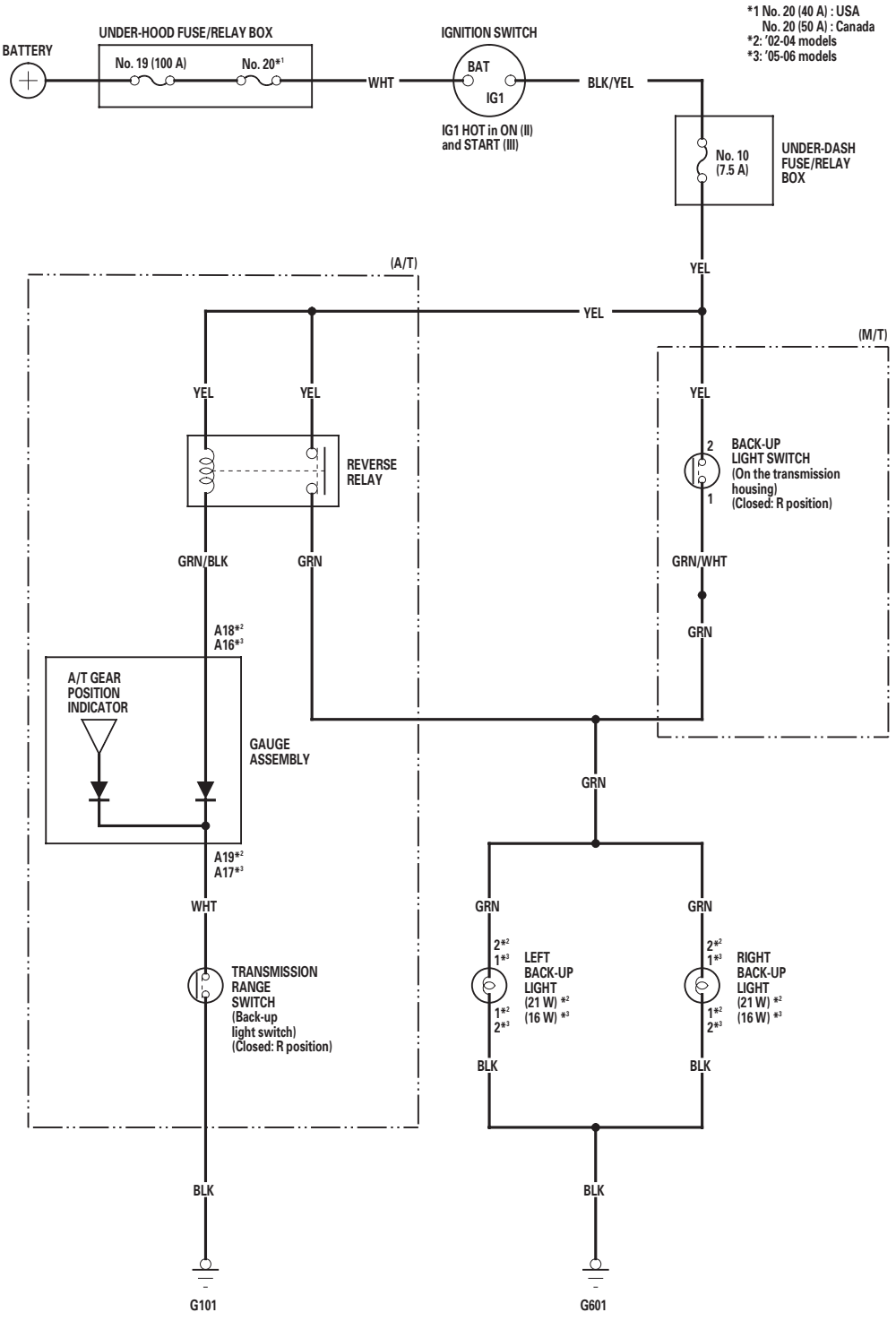

Daytime Running Lights Control Unit Input Test

Canada

1. Remove the driver's dashboard lower cover (see page 20-63).

2. Disconnect the 14P connector (A) from the daytime running lights control unit (B).

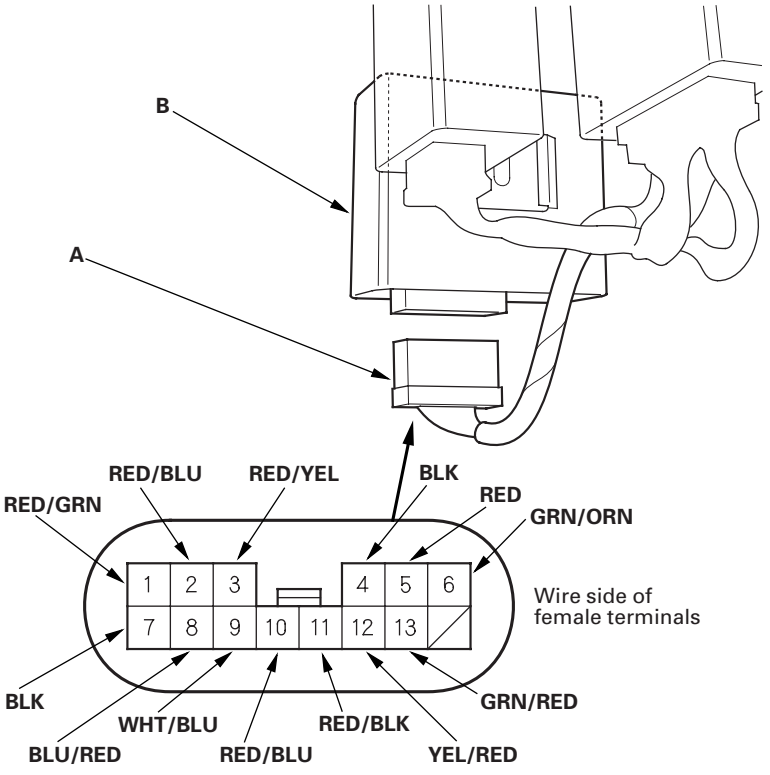

3. Inspect the connector and socket terminals to be sure they are all making good contact.

   - If the terminals are bent, loose or corroded, repair them as necessary, and recheck the system.
   - If the terminals look OK, go to step 4.

4. Make these input tests at the connector.

- If any test indicates a problem, find and correct the cause, then recheck the system.
- If all the input tests prove OK, the control unit must be faulty; replace it.

Cavity	Wire	Test condition	Test: Desired result	Possible cause if result is not obtained
2	RED/BLU	Under all conditions	Check for voltage to ground: There should be battery voltage.	• Blown No. 14 (30 A) fuse in the under-hood fuse/relay box • Blown No. 3 (10 A) fuse in the under-dash fuse/relay box • An open in the wire
12	YEL/RED	Ignition switch ON (II)	Check for voltage to ground: There should be battery voltage.	• Blown No. 12 (7.5 A) fuse in the under-dash fuse/relay box • An open in the wire
4	BLK	Under all conditions	Check for continuity to ground: There should be continuity.	• Poor ground (G401) • An open in the wire
7	BLK	Under all conditions	Check for continuity to ground: There should be continuity.	• Poor ground (G401) • An open in the wire
3	RED/YEL	Combination light switch ON (≣D)	Check for voltage to ground: There should be battery voltage.	• Blown No. 15 (20 A) fuse in the under-hood fuse/relay box • Faulty headlight relay 2 • Faulty combination light switch • An open in the wire
5	RED	Combination light switch ON (≣D)	Check for voltage to ground: There should be battery voltage.	• Blown No. 17 (20 A) fuse in the under-hood fuse/relay box • Faulty headlight relay 1 • Faulty combination light switch • An open in the wire
1	RED/GRN	Combination light switch ON (≣D), and dimmer switch in HIGH	Connect a jumper wire between No. 3 and No. 1, and No. 8 and No. 4 terminals. Left headlight (HIGH) and high beam indicator light should come on.	• Blown bulb • Faulty daytime running lights relay • Faulty combination light switch • Poor ground (G401) • An open in the wire
11	RED/BLK	Combination light switch ON (≣D), and dimmer switch in HIGH	Connect a jumper wire between No. 5 and No. 11, and No. 8 and No. 4 terminals. Right headlight (HIGH) should come on.	• Blown bulb • Faulty daytime running lights relay • Faulty combination light switch • Poor ground (G401) • An open in the wire
10	RED/BLU	Combination light switch ON (≣D), and dimmer switch in HIGH	Connect a jumper wire between No. 8 and No. 4 terminals. Check for continuity to ground: There should be continuity.	• Faulty daytime running lights relay • Faulty combination light switch • Poor ground (G401) • An open in the wire
6	GRN/ORN	Parking brake lever pulled	Check for continuity to ground: There should be continuity.	• Faulty parking brake switch • An open in the wire
8	BLU/RED	Under all conditions	Attach to ground: Headlights (LOW) should come on.	• Faulty headlight relays • Blown bulb • An open in the wire
9	WHT/BLU	Ignition switch ON (II)	Attach to ground: The DRL indicator light should come on.	An open in the wire
13	GRN/RED	Ignition switch ON (II)	Attach to ground: The brake system light should come on.	An open in the wire

5. If necessary, open the hood and adjust the headlights to local requirements by turning the vertical adjuster.

'02-04 models

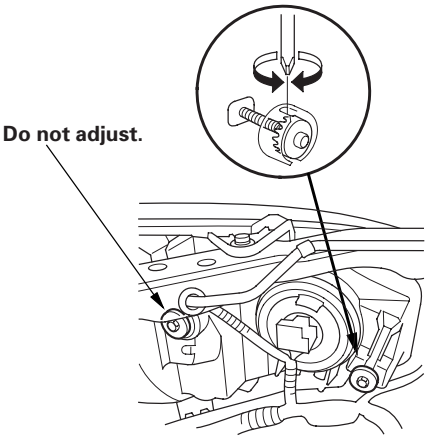

'05-06 models

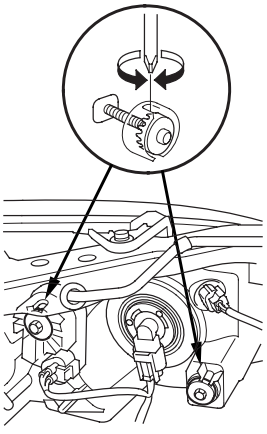

Headlight Replacement

1. Remove the front bumper.

   - '02-04 models (see page 20-90)
   - '05-06 models (see page 20-91)

2. Disconnect the connectors (A) from the headlight (B).

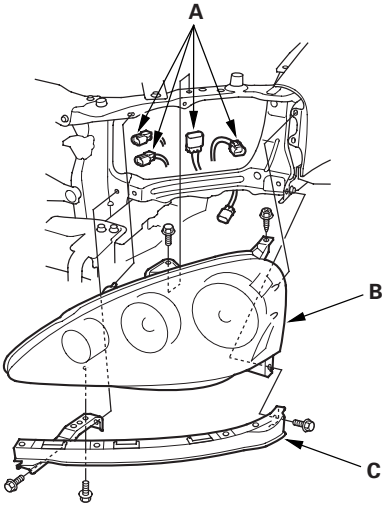

3. Remove the five mounting bolts, then remove the corner upper beam (C) and headlight assembly.

4. Install in the reverse order of removal.

5. After replacement, adjust the headlights to local requirements.

Combination Light Switch Test/Replacement

1. Remove the dashboard lower cover (see page 20-63).

2. Remove the steering column covers (see page 17-25).

3. Disconnect the 16P connector (A) from the combination light switch (B).

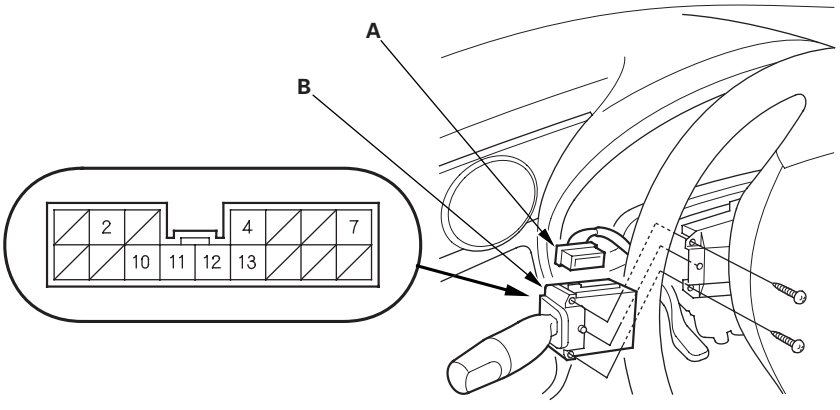

4. Remove the two screws, then pull out the combination light switch.

5. Inspect the connector terminals to be sure they are all making good contact.

   - If the terminals are bent, loose or corroded, repair them as necessary, and recheck the system.
   - If the terminals look OK, check for continuity between the terminals in each switch position according to the tables.

Light switch:

Position \ Terminal			4	7		12	13
Headlight switch	OFF						
						○——	——○
		LOW		○——	——	——	——○
		HIGH	○——	——○	——	——	——○
Passing switch	OFF						
	ON		○——	○——	——▶	——○	
			○——	——	——	——○	

Turn signal switch:

Position \ Terminal	2	10	11
LEFT	○——	——○	
NEUTRAL			
RIGHT		○——	——○

6. If the continuity is not as specified in the table, replace the switch.

Bulb Replacement

Headlight (low beam)

1. Left headlight: Remove the battery, the washer tank neck (A) and the under-hood fuse/relay box bracket (B).

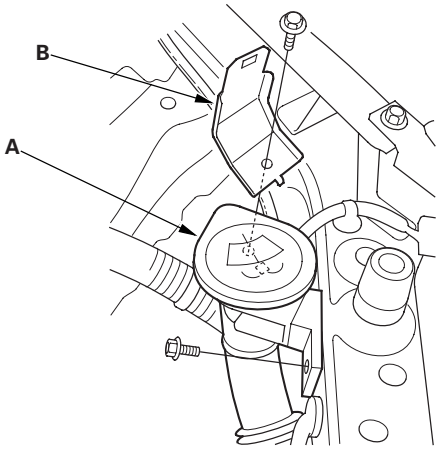

2. Disconnect the 3P connector (A) from the headlight.

   Headlight (low beam): 55 W

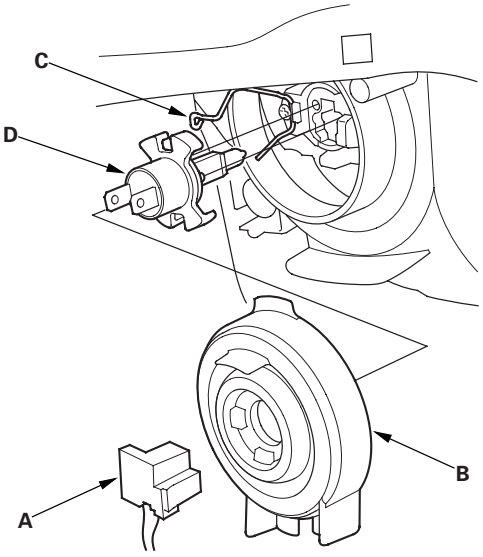

3. Remove the rubber cover (B).

4. Pull the retaining spring (C) away from the bulb (D), then remove the bulb.

5. Install a new bulb in the reverse order of removal. Make sure the notches in the bulb align with the tabs in the headlight.

Headlight (high beam) ('02-04 models)

1. Disconnect the 3P connector (A) from the headlight.

   Headlight (high beam): 55 W

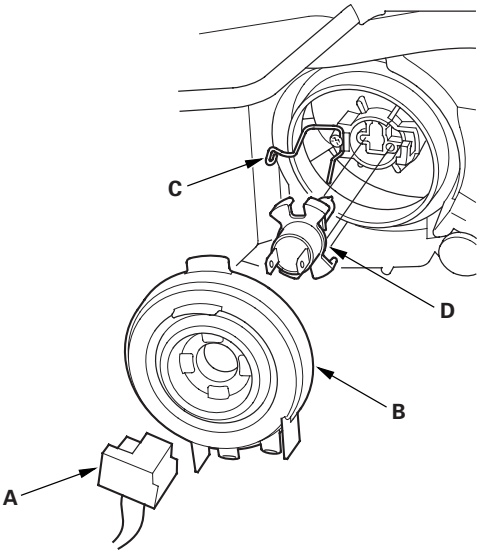

2. Remove the rubber cover (B).

3. Pull the retaining spring (C) away from the bulb (D), then remove the bulb.

4. Install a new bulb in the reverse order of removal. Make sure the notches in the bulb align with the tabs in the headlight.

(cont'd)

Bulb Replacement (cont'd)

Headlight (high beam) ('05-06 models)

1. Disconnect the 2P connector (A) from the headlight (high beam).

   Headlight (high beam): 60 W

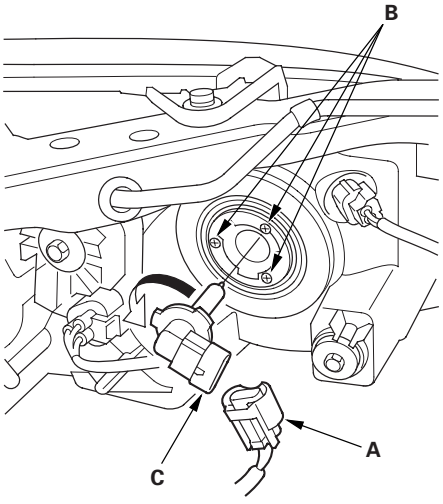

2. Loosen the three mounting screws (B), then turn the bulb socket (C) 45 ° counterclockwise to remove it from the headlight housing.

3. Install a new bulb in the reverse order of removal.

Front Parking Lights and Turn Signal Lights ('02-04 models)

1. Disconnect the connectors (A) from the light.

   Front Parking Light: 5 W
   Front Turn Signal Light: 21 W

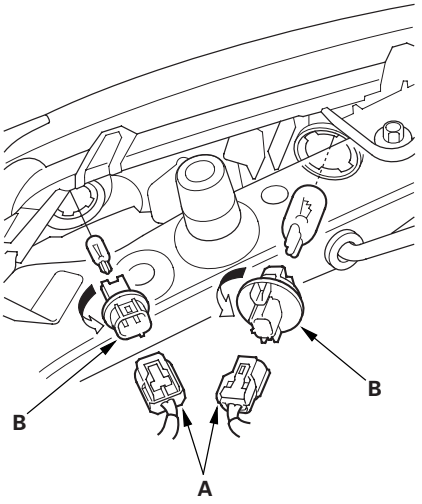

2. Turn the bulb socket (B) 45 ° counterclockwise to remove it from the housing.

3. Install the new bulb(s) in the reverse order of removal.

Front Parking Lights, Front Side Marker Lights and Turn Signal Lights ('05-06 models)

1. Disconnect the connectors (A) from the light.

Front Parking Light: 5 W
Front Side Marker Light: 5 W
Front Turn Signal Light: 21 W

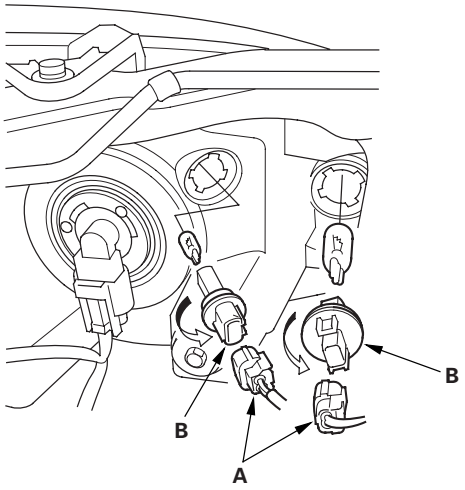

2. Turn the bulb socket (B) 45 ° counterclockwise to remove it from the housing.

3. Install the new bulb(s) in the reverse order of removal.

Taillight Replacement

1. Remove the rear bumper.

   - '02-04 models (see page 20-95)
   - '05-06 models (see page 20-96)

2. Open the hatch, and remove the taillight access lid.

3. Disconnect the connectors (A) from the taillight (B).

Brake/Taillight: 21/5 W x 2 (21/5 W)*
Back-up Light: 21 W (16 W)*
Rear Turn Signal Light: 21 W
Rear Side Marker Light: 5 W
***: '05-06 models**

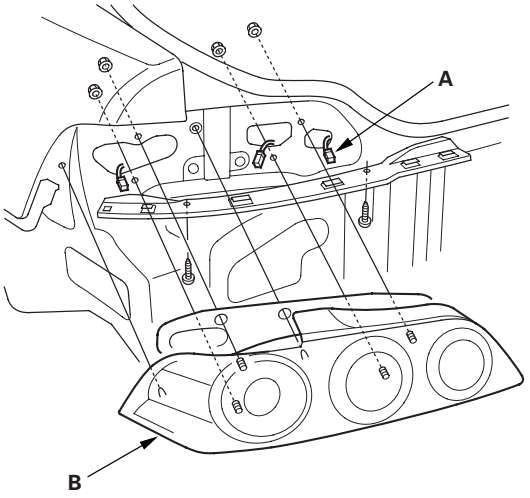

4. Turn the bulb socket 45 ° counterclockwise to remove the bulb socket.

5. Remove the mounting nuts, then remove the taillight.

6. Install the taillight and note these items:

   - Inspect the gasket; replace it if it is distorted or stays compressed.
   - After installing the taillight, run water over it to make sure it does not leak.

High Mount Brake Light Replacement

1. Open the hatch, and remove the hatch lower trim (see page 20-54).

2. Disconnect the 2P connectors (A) from the high mount brake light (B).

   High Mount Brake Light: 21 W

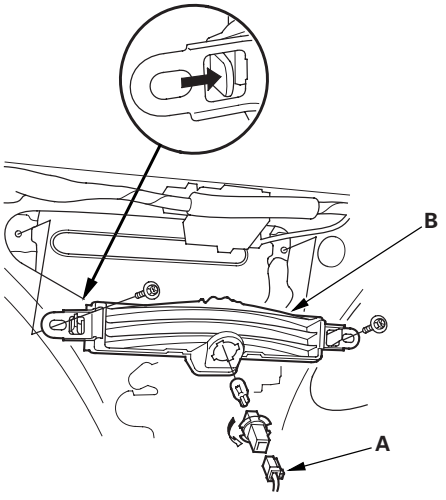

3. Turn the bulb socket 45 ° counterclockwise to remove the bulb socket.

4. Remove the two mounting bolts and the high mount brake light.

5. Install the light in the reverse order of removal.

License Plate Light Replacement

1. Remove the license plate light (A) from the rear bumper.

   License Plate Light Bulb: 5 W

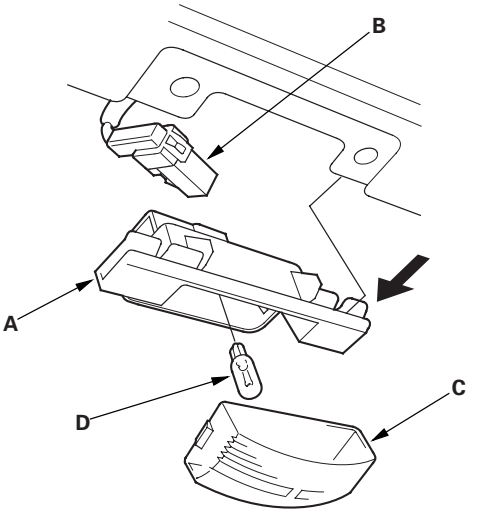

2. Disconnect the 2P connector (B) from the light.

3. Take the lens (C) off, then remove the bulb (D).

4. Install the light in the reverse order of removal.

Brake Pedal Position Switch Test

1. Remove the driver's dashboard lower cover (see page 20-63).

2. Disconnect the 4P connector (A) from the brake pedal position switch (B).

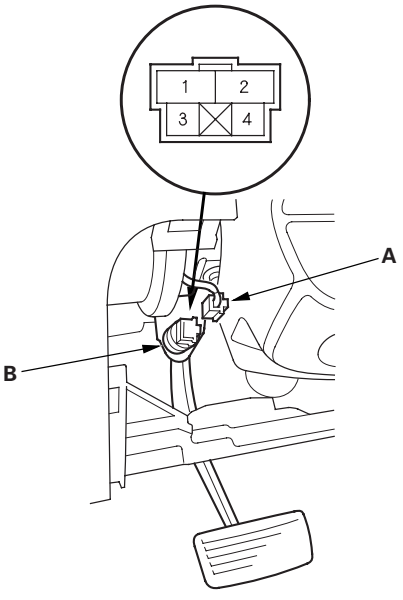

3. Check for continuity between the No. 1 and No. 2 terminals.

   - There should be continuity when the brake pedal is pressed.
   - There should be no continuity when the brake pedal is released.

4. Check for continuity between the No. 3 and No. 4 terminals (with cruise control).

   - There should be no continuity when the brake pedal is pressed.
   - There should be continuity when the brake pedal is released.

5. If necessary, adjust or replace the switch, or adjust the pedal height (see page 19-6).

Component Location Index

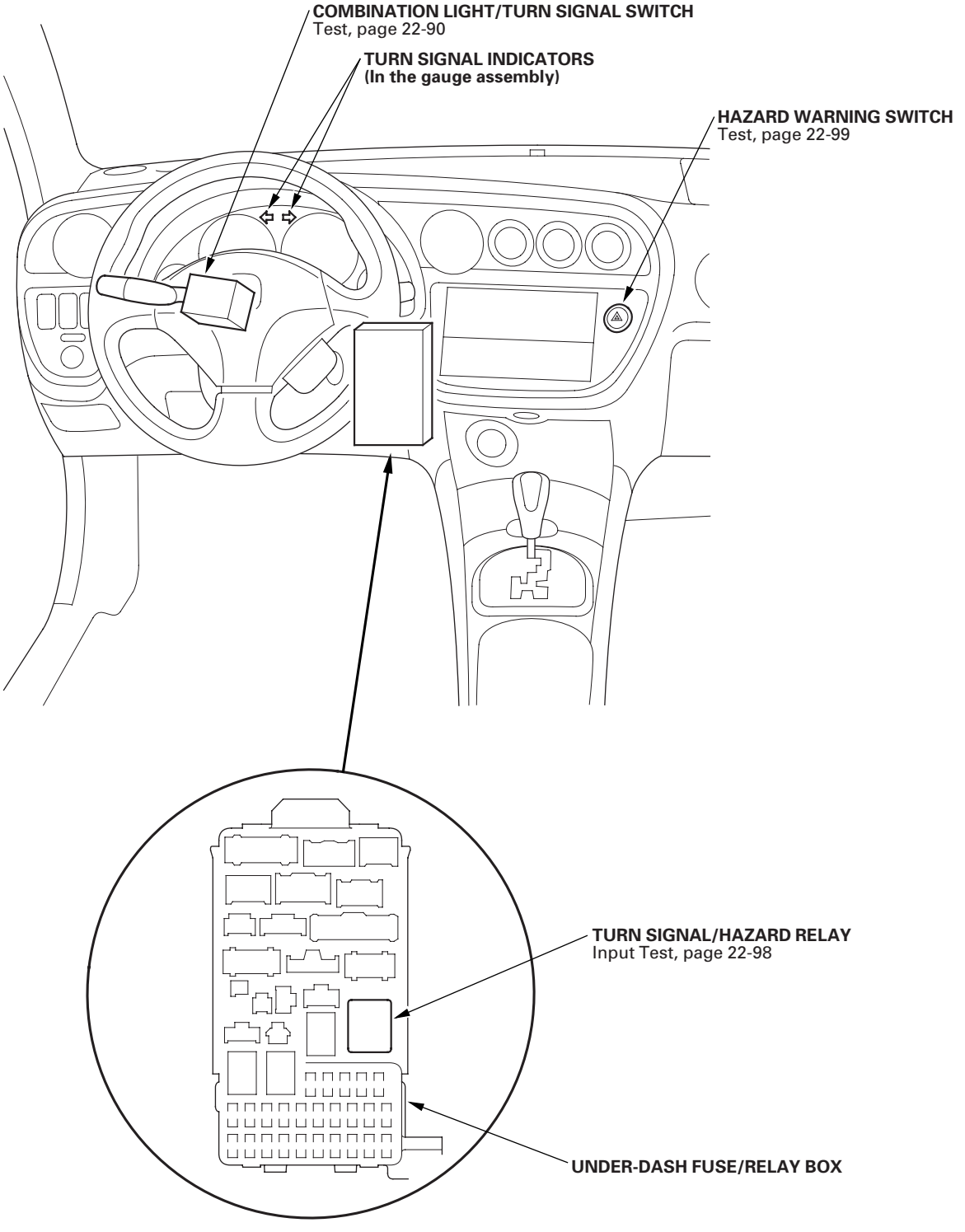

Circuit Diagram

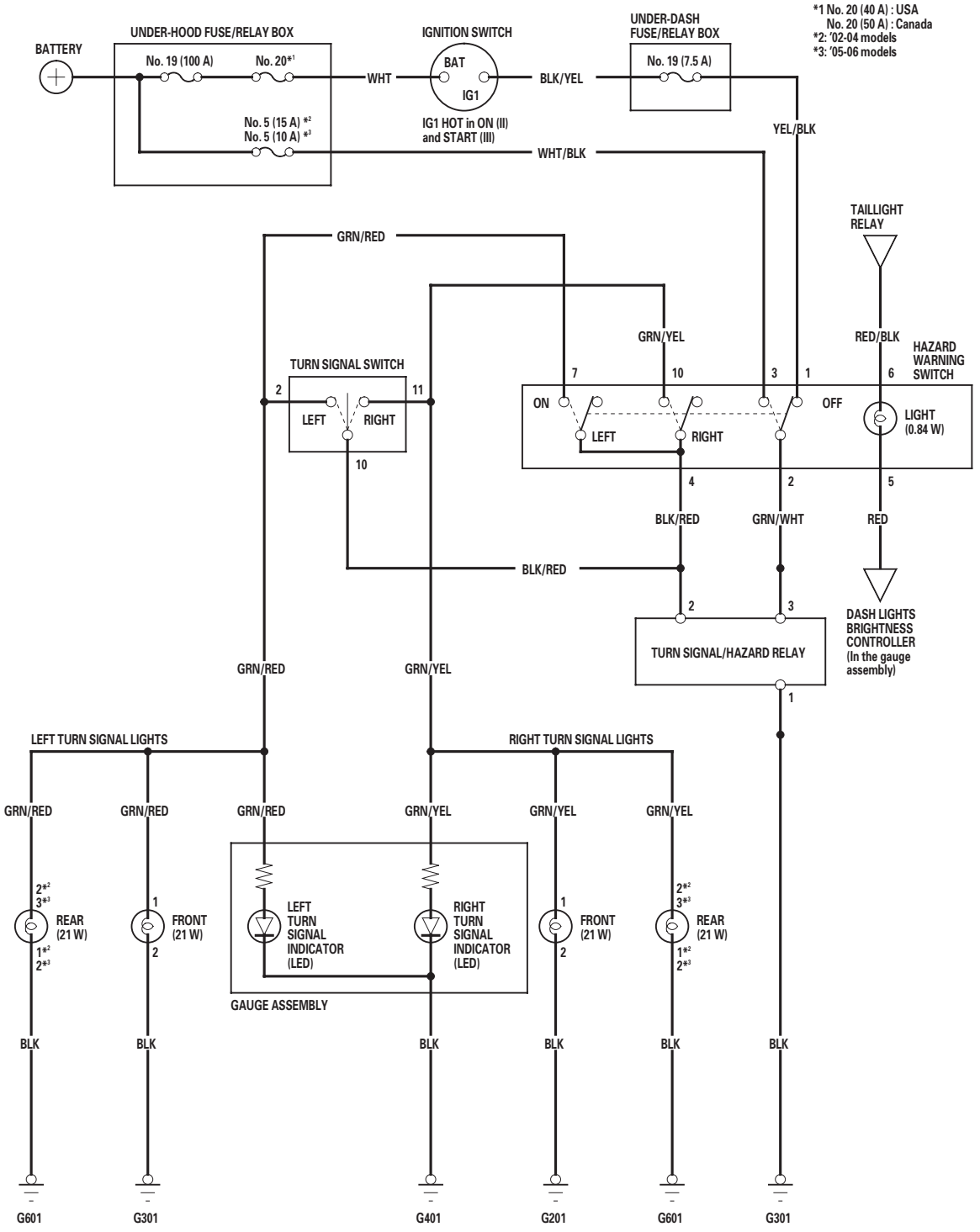

Turn Signal/Hazard Relay Input Test

1. Remove the turn signal/hazard relay (A) from the under-dash fuse/relay box (B).

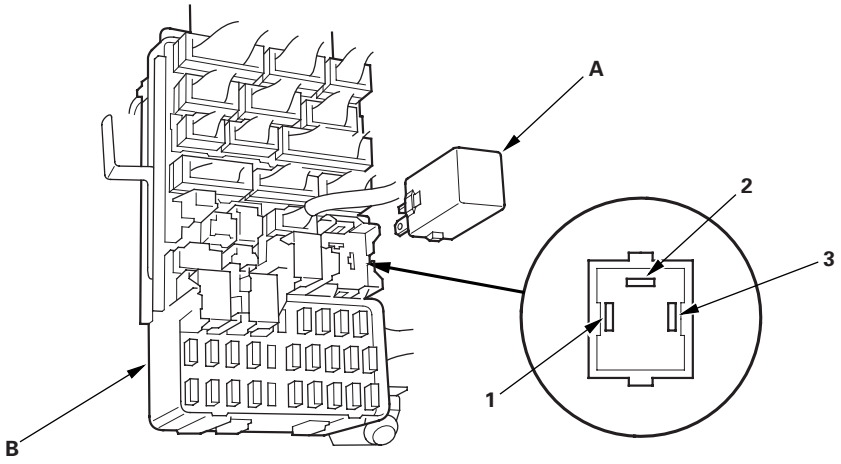

2. Inspect the relay and fuse/relay box socket terminals to be sure they are all making good contact.

   - If the terminals are bent, loose, or corroded, repair them as necessary, and recheck the system.
   - If the terminals look OK, go to step 3.

3. Make these input tests at the fuse/relay box.

   - If any test indicates a problem, find and correct the cause, then recheck the system.
   - If all the input tests prove OK, the turn signal/hazard relay must be faulty; replace it.

Cavity	Test condition	Test: Desired result	Possible cause if result is not obtained
1	Under all conditions	Check for continuity to ground: There should be continuity.	• Poor ground (G301) • An open in the wire
3	Ignition switch ON (II)	Check for voltage to ground: There should be battery voltage.	• Blown No. 19 (7.5 A) fuse in the under-dash fuse/relay box • Faulty hazard warning switch • An open in the wire
	Hazard warning switch ON	Check for voltage to ground: There should be battery voltage.	• Blown No. 5 (15 A) [No. 15 (10 A)] fuse in the under-hood fuse/relay box • Faulty hazard warning switch • An open in the wire
2	Ignition switch ON (II) and turn signal switch in right or left position	Connect No. 2 terminal to No. 3 terminal: Right or left turn signal lights should come on.	• Blown No. 19 (7.5 A) fuse in the under-dash fuse/relay box • Poor ground (G201, G301, G401, G601) • Faulty turn signal switch • An open in the wire
	Hazard warning switch ON	Connect No. 2 terminal to No. 3 terminal: Right or left turn signal lights should come on.	• Blown No. 5 (15 A) [No. 15 (10 A)] fuse in the under-hood fuse/relay box • Poor ground (G201, G301, G401, G601) • Faulty hazard warning switch • An open in the wire

[ ] : '05-06 models

Hazard Warning Switch Test

1. Remove the audio unit (see page 22-118).

2. Disconnect the 10P connector (A) from the hazard warning switch (B).

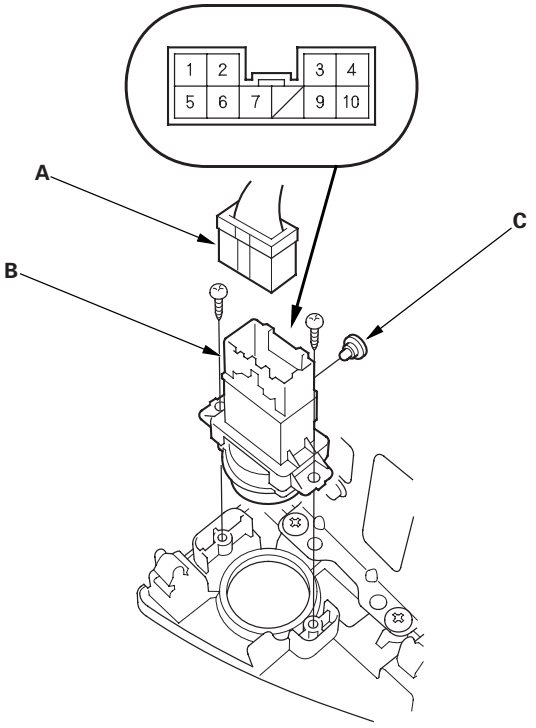

3. Remove the two screws and the hazard warning switch.

4. Check for continuity between the terminals in each switch position according to the table.

Terminal / Position	5		6	1	2	3	4	7	10
OFF	○	⊖	○	○	○				
ON	○	⊖	○		○	○	○	○	○

5. If the continuity is not as specified, replace the illumination bulb (C) or the switch.

Component Location Index

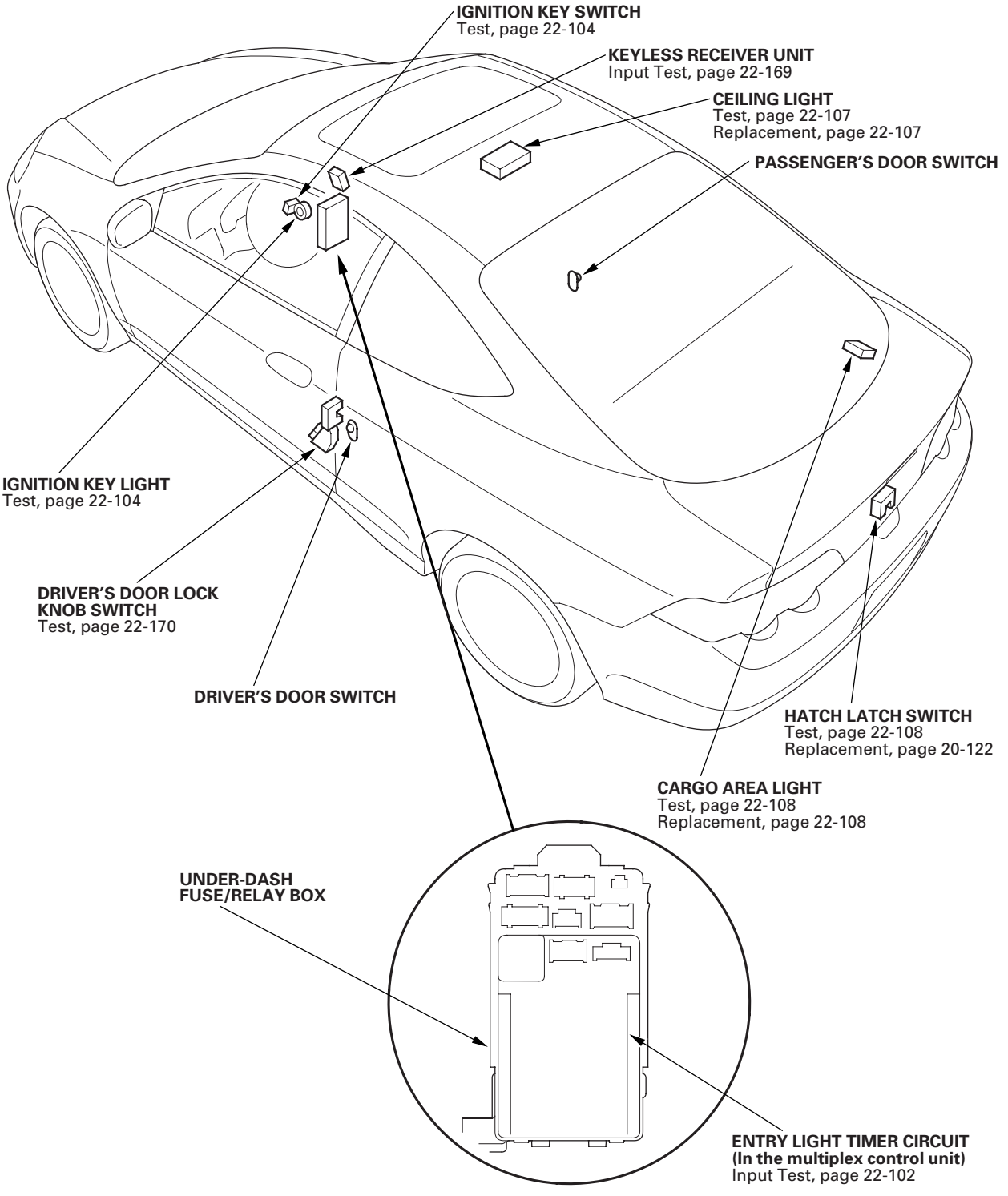

Circuit Diagram

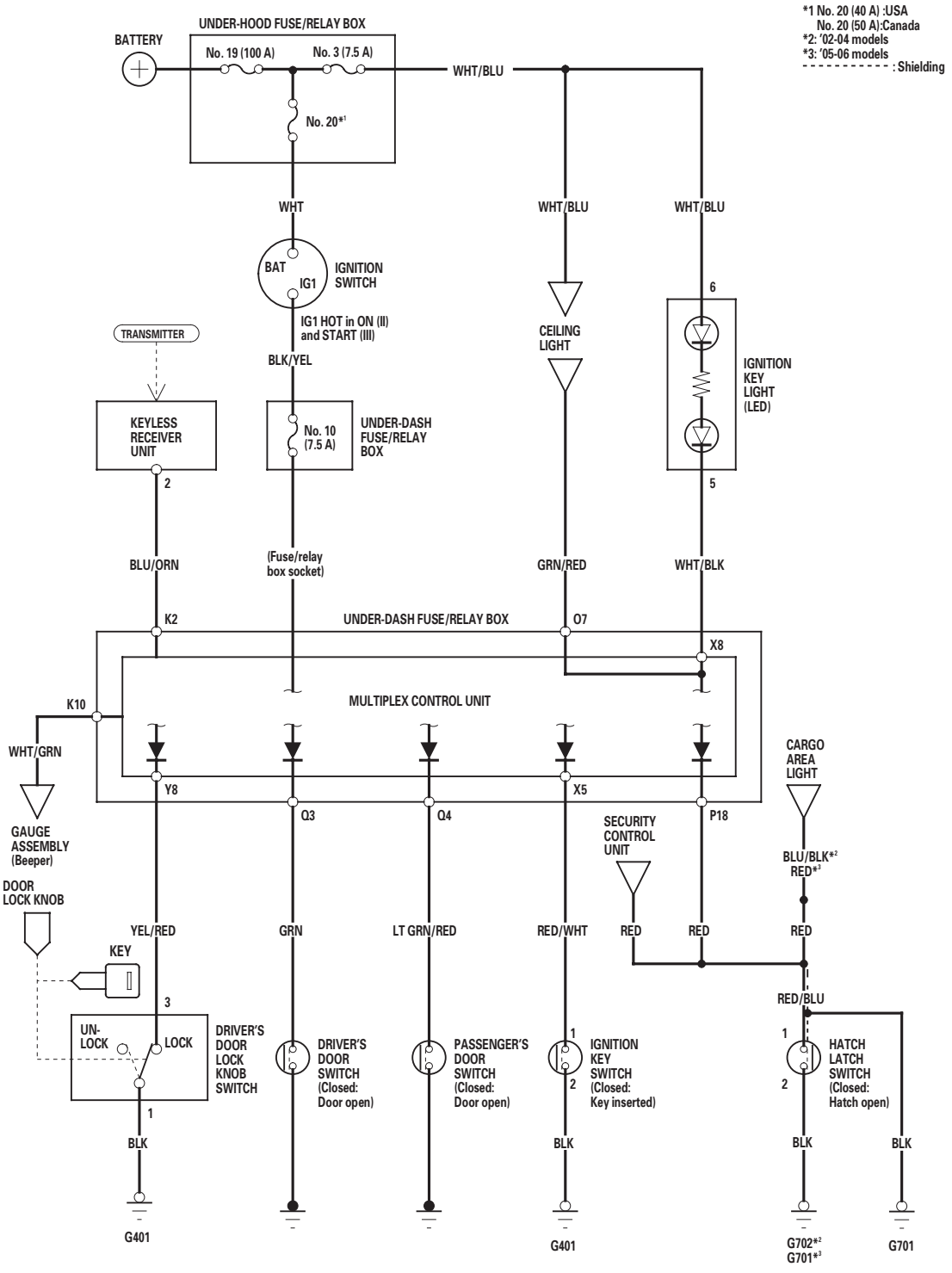

Control Unit Input Test

1. Before testing, troubleshoot the multiplex control system (see page 22-189).
2. Remove the driver's dashboard lower cover (see page 20-63).
3. Disconnect the under-dash fuse/relay box connectors.

   NOTE: All connectors are wire side of female terminals.

UNDER-DASH FUSE/RELAY BOX CONNECTOR K (17P)

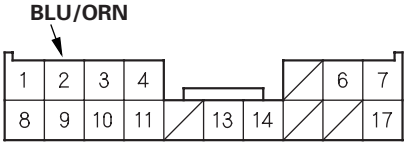

UNDER-DASH FUSE/RELAY BOX CONNECTOR O (12P)

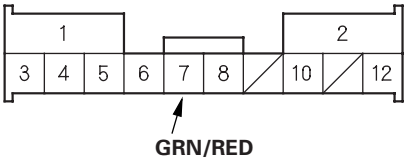

UNDER-DASH FUSE/RELAY BOX CONNECTOR P (18P)

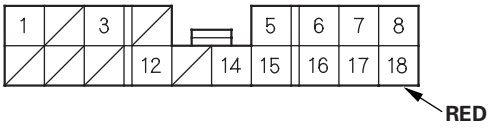

UNDER-DASH FUSE/RELAY BOX CONNECTOR Q (8P)

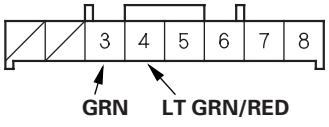

UNDER-DASH FUSE/RELAY BOX CONNECTOR X (8P)

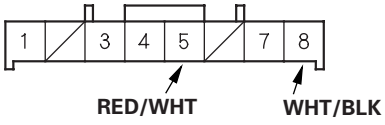

UNDER-DASH FUSE/RELAY BOX CONNECTOR Y (13P)

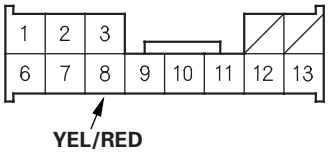

4. Inspect the connector and socket terminals to be sure. They are all making good contact.

   - If the terminals are bent, loose or corroded, repair them as necessary, and recheck the system.
   - If the terminals look OK, go to step 5.

5. With the connectors still disconnected, make this input test at the connector.

   - If the test indicates a problem, find and correct the cause, then recheck the system.
   - If the input test proves OK, go to step 6.

Cavity	Wire	Test condition	Test: Desired result	Possible cause if result is not obtained
K2	BLU/ORN	Under all conditions	Check for continuity between the K2 terminal and the keyless receiver unit 5P connector No. 2 terminal: There should be continuity.	An open in the wire

6. Reconnect the connectors to the under-dash fuse/relay box, and make these input tests at the appropriate connectors on the under-dash fuse/relay box.

   - If any test indicates a problem, find and correct the cause, then recheck the system.
   - If all the input tests prove OK, the multiplex control unit must be faulty, replace the under-dash fuse/relay box assembly.

Cavity	Wire	Test condition	Test: Desired result	Possible cause if result is not obtained
O7	GRN/RED	Ceiling light switch in middle position	Attach to ground: Ceiling light should come on.	• Blown No. 3 (7.5 A) fuse in the under-hood fuse/relay box • Blown bulb • Faulty ceiling light • An open in the wire
P18	RED	Hatch open	Check for voltage to ground: There should be 1 V or less. NOTE: Remove the No. 3 (7.5 A) fuse from the under-hood fuse/relay box.	• Poor ground (G701) • Faulty hatch latch switch • An open in the wire
		Hatch closed	Check for voltage to ground: There should be 5 V or more. NOTE: Remove the No. 3 (7.5 A) fuse from the under-hood fuse/relay box.	• Faulty hatch latch switch • Short to ground
Q3	GRN	Driver's door open	Check for voltage to ground: There should be 1 V or less.	• Faulty driver's door switch • An open in the wire
		Driver's door closed	Check for voltage to ground: There should be 5 V or more.	• Faulty driver's door switch • Short to ground
Q4	LT GRN/RED	Passenger's door open	Check for voltage to ground: There should be 1 V or less.	• Faulty passenger's door switch • An open in the wire
		Passenger's door closed	Check for voltage to ground: There should be 5 V or more.	• Faulty passenger's door switch • Short to ground
X5	RED/WHT	Ignition key inserted into the ignition switch	Check for voltage to ground: There should be 1 V or less.	• Poor ground (G401) • Faulty ignition key switch • An open in the wire
		Ignition key removed from the ignition switch	Check for voltage to ground: There should be 5 V or more.	• Faulty ignition key switch • Short to ground
X8	WHT/BLK	Under all conditions	Attach to ground: Ignition key light should come on.	• Blown No. 3 (7.5 A) fuse in the under-hood fuse/relay box • Faulty ignition key light • An open in the wire
Y8	YEL/RED	Driver's door locked	Check for voltage to ground: There should be 1 V or less.	• Poor ground (G401) • Faulty driver's door lock knob switch • An open in the wire
		Driver's door unlocked	Check for voltage to ground: There should be 5 V or more.	• Faulty driver's door lock knob switch • Short to ground

Ignition Key Switch Test

NOTE: For more key-in beeper information, refer to the circuit diagram (see page 22-101) and input test (see page 22-102).

When the ignition key is in the ignition switch, the key-in beeper circuit of the multiplex control unit senses ground through the closed ignition key switch. When you open the driver's door, the beeper circuit senses ground through the closed door switch. When both switches are closed (driver's door and ignition), the key-in beeper in the gauge assembly is activated.

1. Remove the steering column upper and lower covers (see page 17-25).

2. Disconnect the 6P connector.

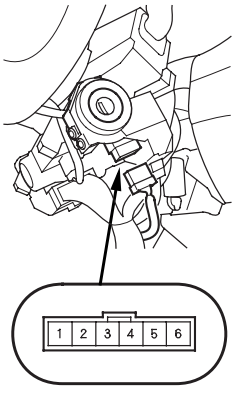

3. Check for continuity between the No. 1 and No. 2 terminals.

   - There should be continuity with the key in the ignition switch.
   - There should be no continuity with the key removed.

4. If the continuity check is not as specified, replace the steering lock assembly.

Ignition Key Light Test

1. Remove the steering column upper and lower covers (see page 17-25).

2. Disconnect the 6P connector.

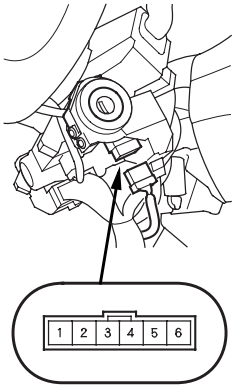

3. The LED should come on when power is connected to the No. 6 terminal and ground is connected to No. 5 terminal.

4. If the LED does not come on, replace the steering lock assembly.

Component Location Index

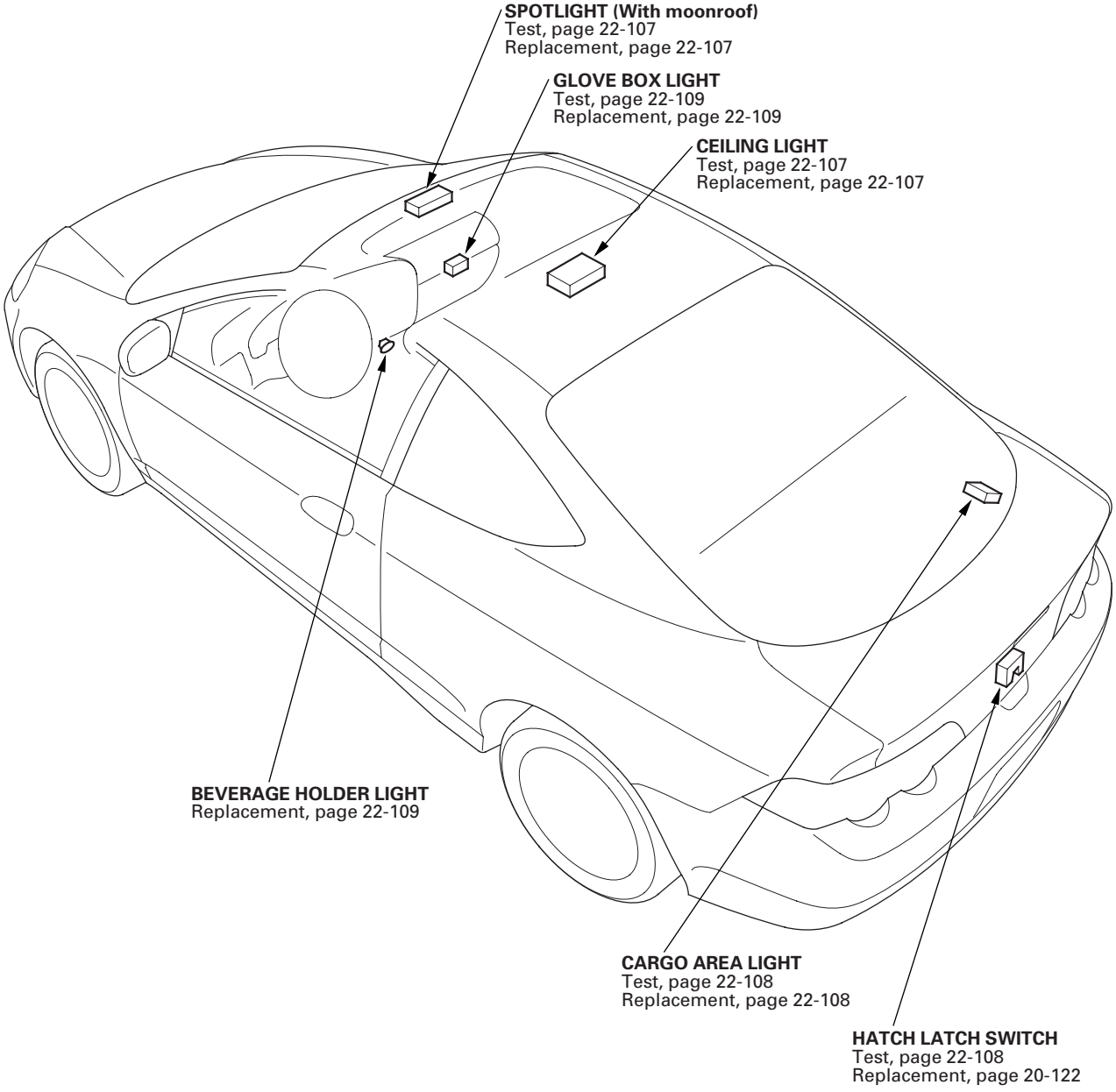

Circuit Diagram

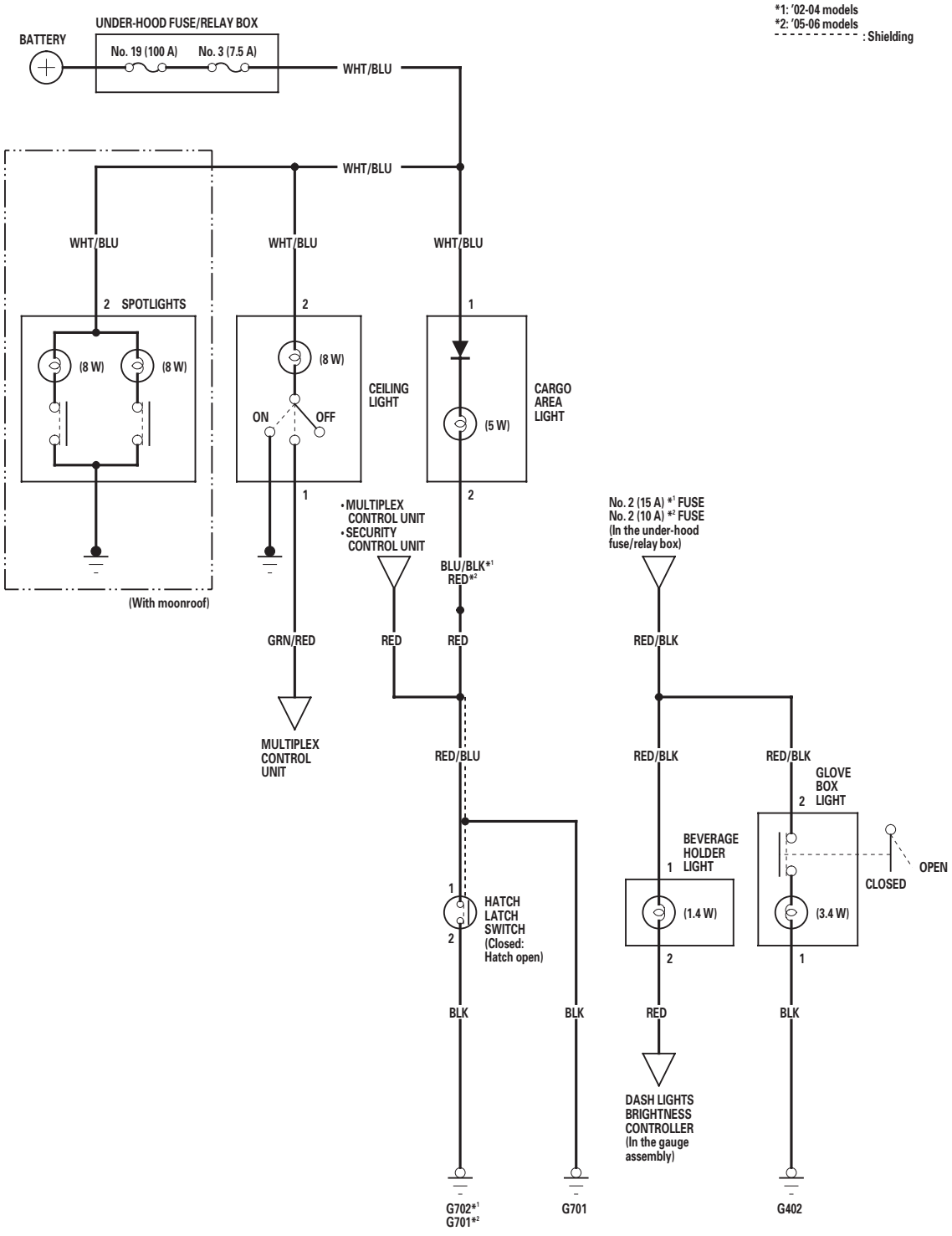

Spotlight Test/Replacement

With Moonroof

1. Turn the light switch OFF.
2. Carefully pry off the lenses (A) with a small screwdriver.

   Spotlight: 8 W x 2

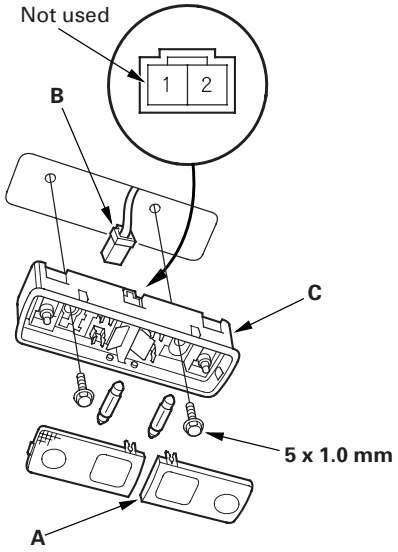

3. Remove the two mounting screws.
4. Disconnect the 2P connector (B) from the housing (C).
5. Check for continuity between the terminals in each switch position according to the table.

Position \ Terminal		2		1 or Body ground
LEFT	ON	○	⊗	○
	OFF			
RIGHT	ON	○	⊗	○
	OFF			

6. If the continuity check is not as specified, check the bulb(s). If the bulb is OK, replace the housing.

Ceiling Light Test/Replacement

1. Turn the light switch OFF.
2. Carefully pry off the lens (A) with a small screwdriver.

   Ceiling Light: 8 W

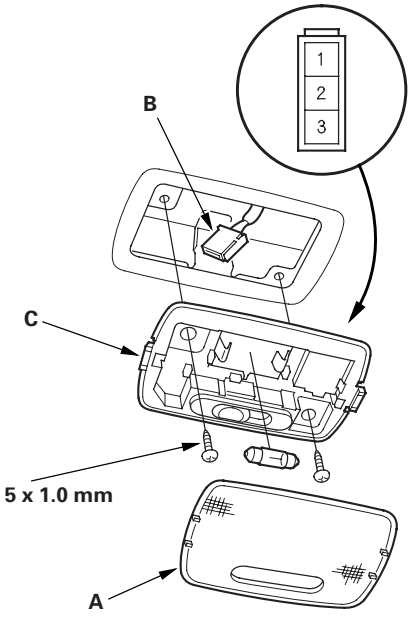

3. Remove the two mounting screws.
4. Disconnect the 3P connector (B) from the housing (C).
5. Check for continuity between the terminals in each switch position according to the table.

Position \ Terminal	1		2		3
OFF					
MIDDLE	○	⊗	○		
ON			○	⊗	○

6. If the continuity check is not as specified, check the bulb(s). If the bulb is OK, replace the housing.

Cargo Area Light Test/Replacement

1. Open the hatch.
2. Carefully pry out the cargo area light (A).

   Cargo Area Light: 5 W

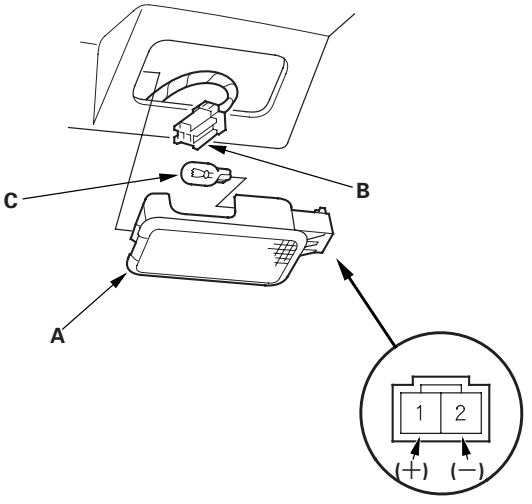

3. Disconnect the 2P connector (B) from the light.
4. Check for continuity between the No. 1 (+) and No. 2 (−) terminals. There should be continuity.
5. If there is no continuity, check the bulb (C). If the bulb is OK, replace the cargo area light.

Hatch Latch Switch Test

1. Open the hatch.
2. Remove the hatch trim panel (see page 20-54).
3. Disconnect the 2P connector (A) from the hatch latch (B).

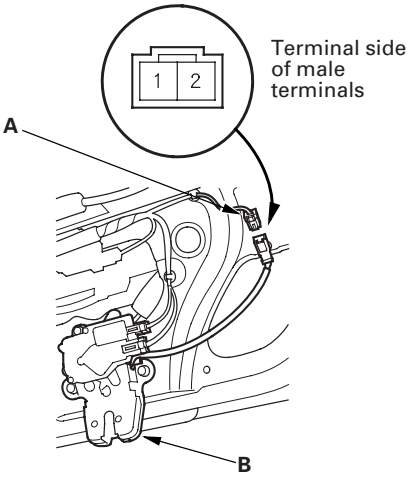

4. Check for continuity between the No. 1 and No. 2 terminals.
   - There should be continuity with the hatch open.
   - There should be no continuity with the hatch closed.
5. If the continuity check is not as specified, replace the switch.

Beverage Holder Light Replacement

1. Remove the dashboard center lower cover (see page 20-65).

2. Remove the audio unit (see page 22-118).

3. Disconnect the 2P connector (A) from the beverage holder light (B), then remove the beverage holder light from the dashboard.

   Beverage Holder Light: 1.4 W

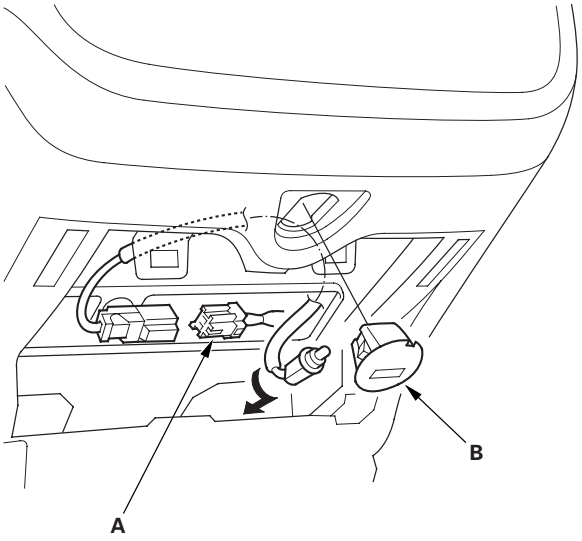

4. Install in the reverse order of removal.

Glove Box Light Test/Replacement

1. Open the glove box.

2. Disconnect the 2P connector from the glove box light (A).

   Glove Box Light: 3.4 W

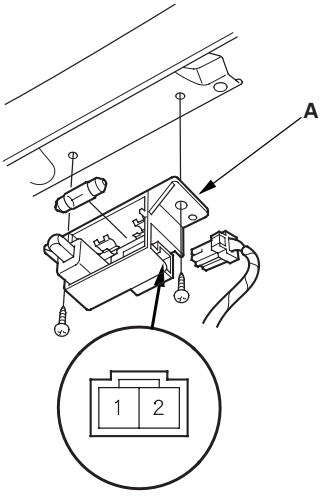

3. Check for continuity between the No. 1 and No. 2 terminals.

   - There should be continuity with the switch released.
   - There should be no continuity with the switch pushed.

4. If the continuity check is not as specified, replace the glove box light.

Component Location Index

*: With BOSE sound system

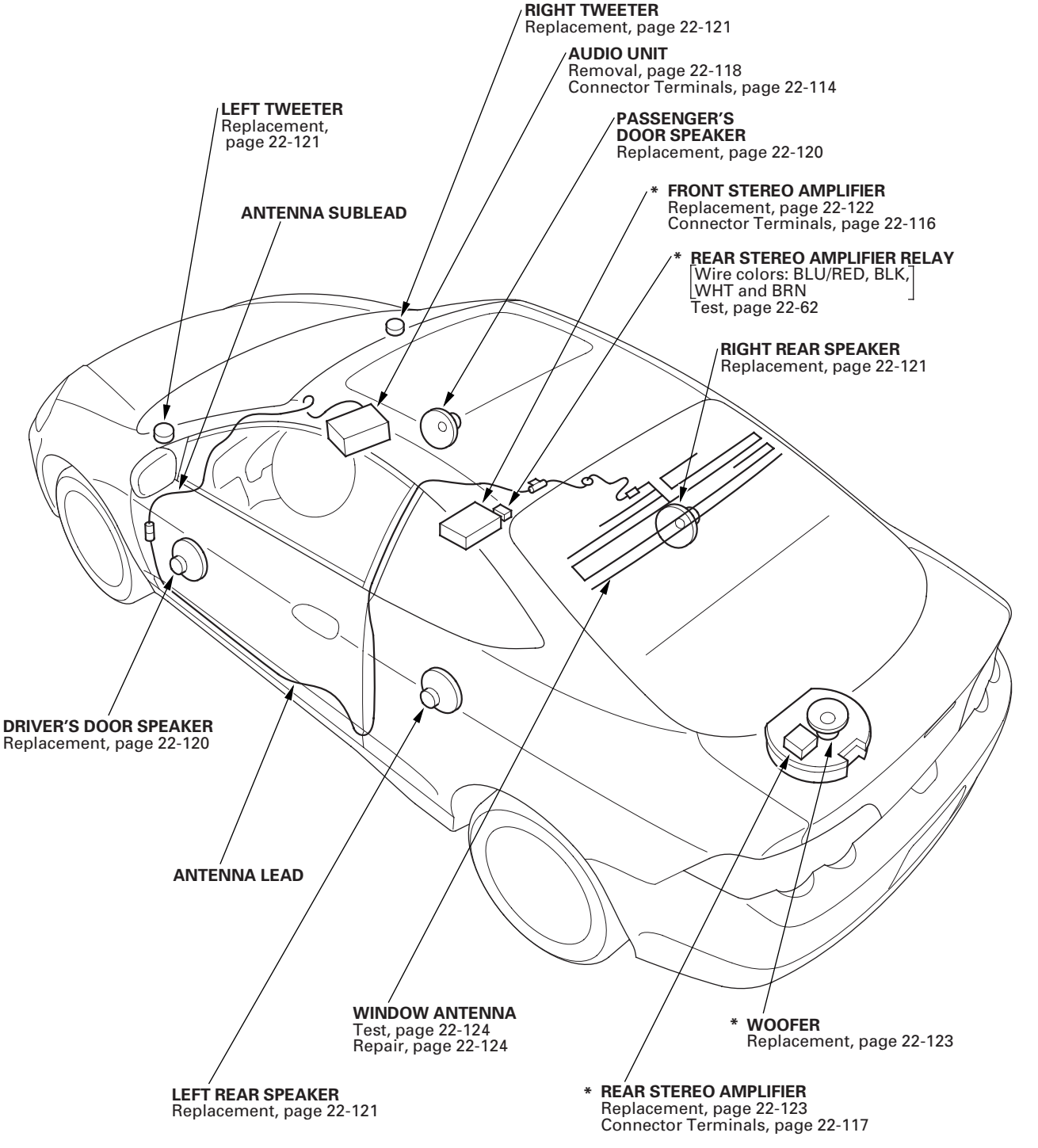

Circuit Diagram - With BOSE Sound System

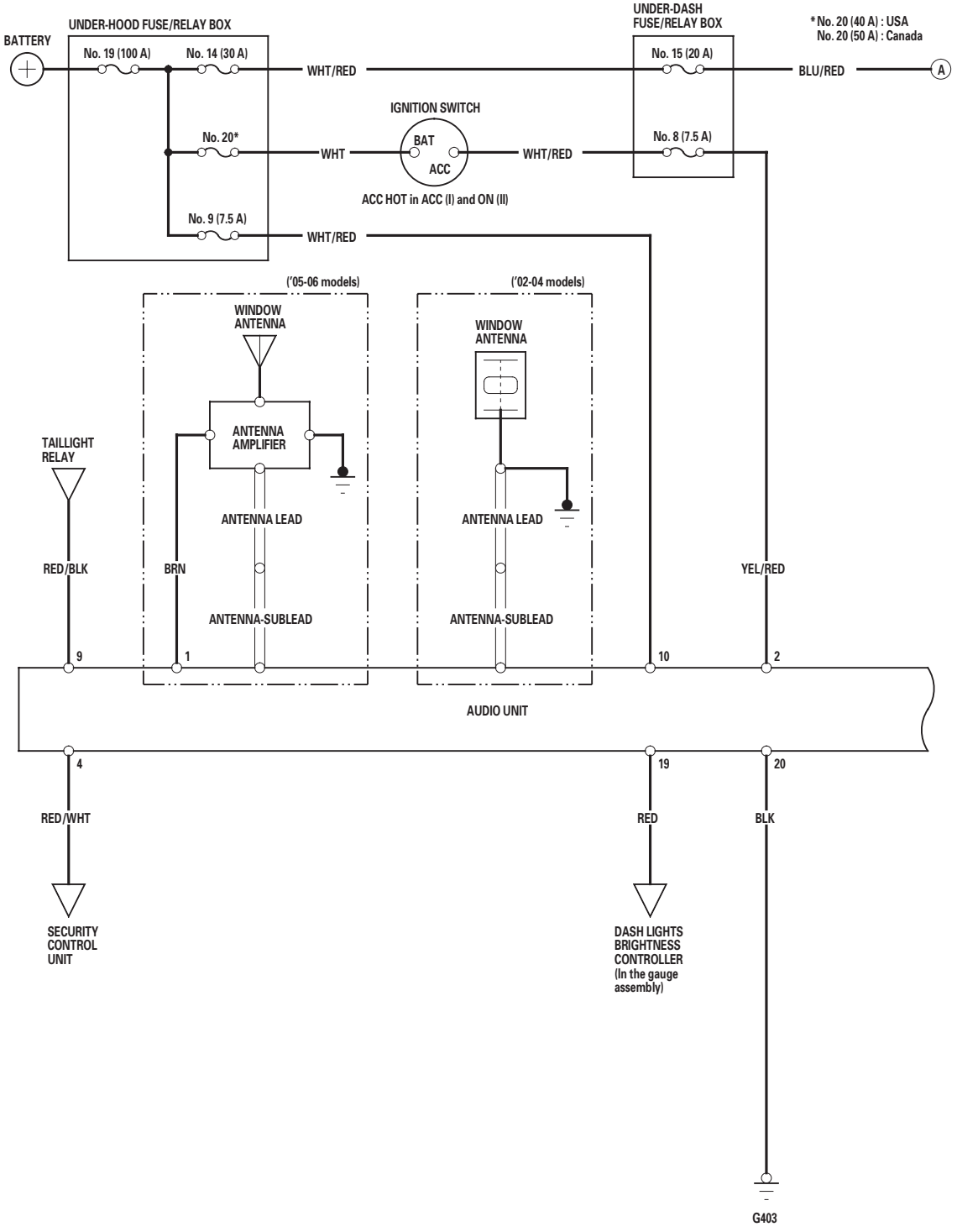

(cont'd)

Circuit Diagram - With BOSE Sound System (cont'd)

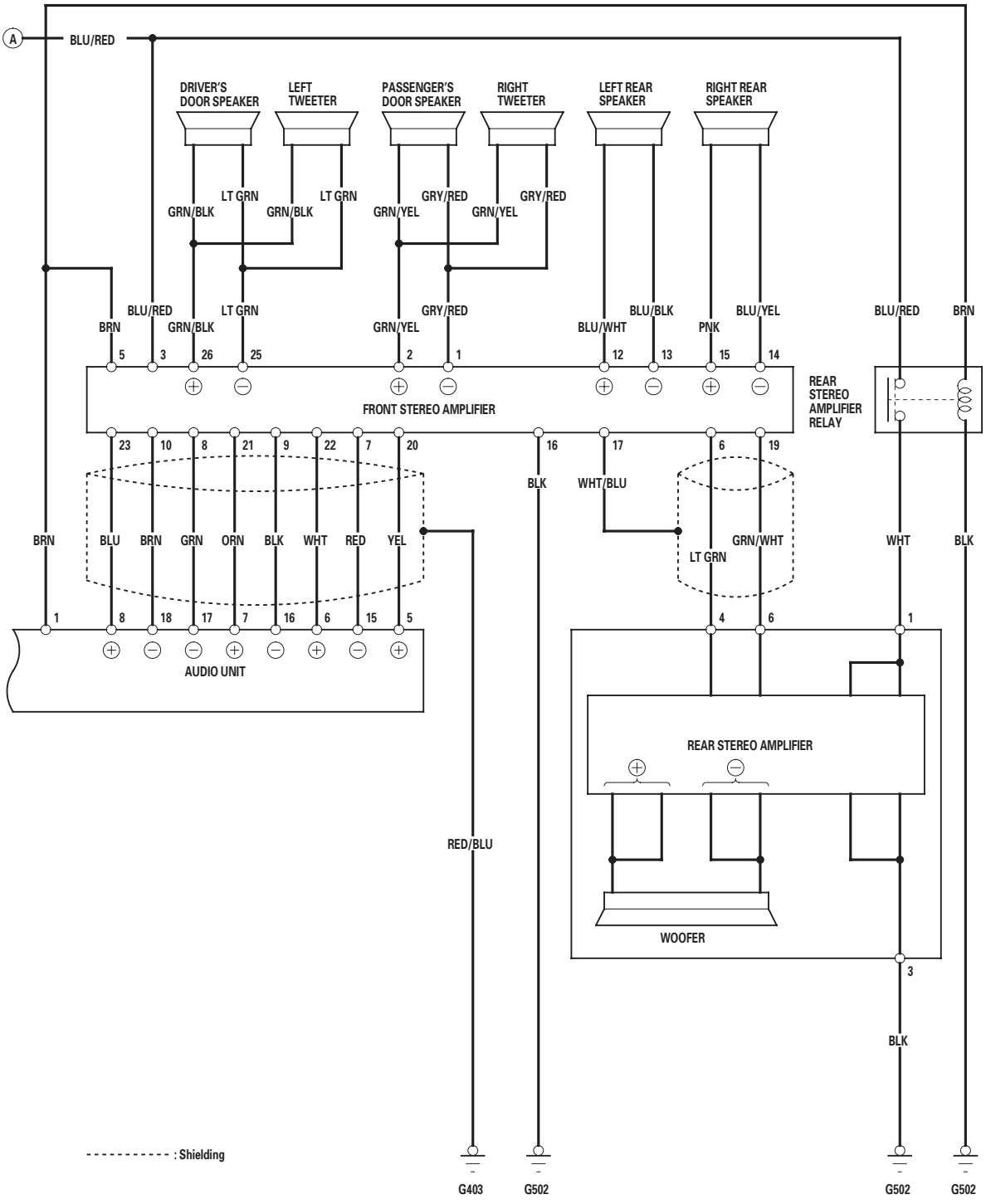

Circuit Diagram - Without BOSE Sound System

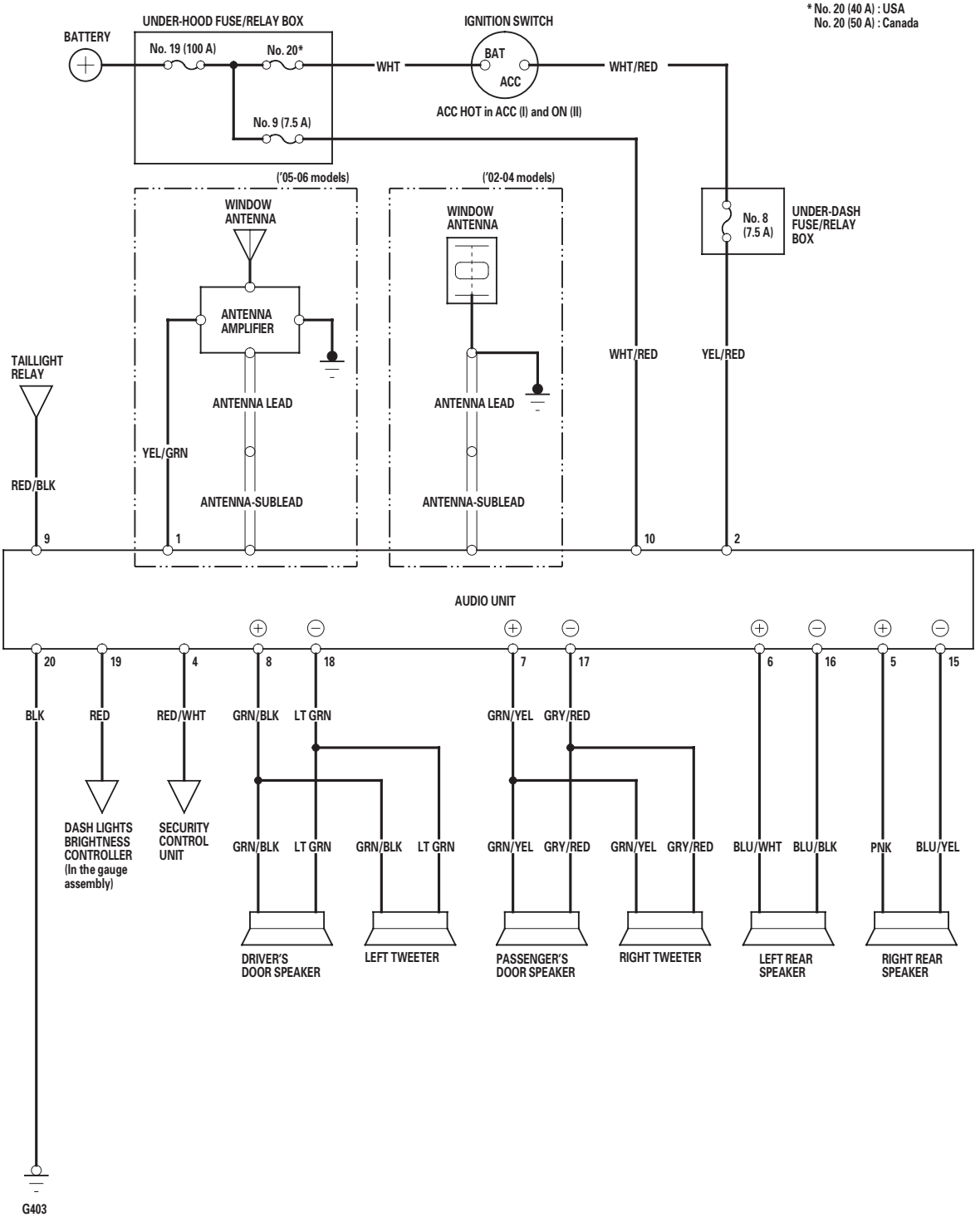

System Description

Audio Unit Connector Inputs and Outputs

With BOSE Sound System

When replacing an audio unit connector, match the wires to the cavities as listed in the following table.

Cavity	Wire	Connects to
1	BRN	Radio switched power (Turns ON front stereo amplifier and rear stereo amplifier relay)
2	YEL/RED	ACC (Main stereo power supply)
3	———	Not used
4	RED/WHT	Security input
5	YEL	Front stereo amplifier-right rear (+)
6	WHT	Front stereo amplifier-left rear (+)
7	ORN	Front stereo amplifier-right front (+)
8	BLU	Front stereo amplifier-left front (+)
9	RED/BLK	Lights-on signal
10	WHT/RED	Constant power
11	———	Not used
12	———	Not used
13	———	Not used
14	———	Not used
15	RED	Front stereo amplifier-right rear (—)
16	BLK	Front stereo amplifier-left rear (—)
17	GRN	Front stereo amplifier-right front (—)
18	BRN	Front stereo amplifier-left front (—)
19	RED	Dash lights brightness controller (In the gauge assembly)
20	BLK	Ground (G403)

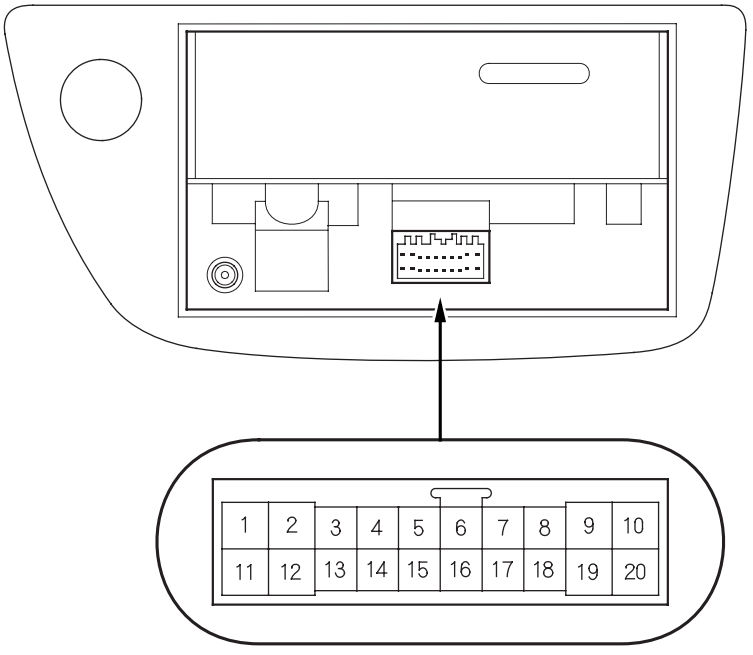

Audio Unit Connector Inputs and Outputs

Without BOSE Sound System

When replacing an audio unit connector, match the wires to the cavities as listed in the following table.

Cavity	Wire	Connects to
1	YEL/GRN*	Antenna amplifier power
2	YEL/RED	ACC (Main stereo power supply)
3	———	Not used
4	RED/WHT	Security input
5	PNK	Right rear speaker (+)
6	BLU/WHT	Left rear speaker (+)
7	GRN/YEL	Passenger's door speaker (+), Right tweeter (+)
8	GRN/BLK	Driver's door speaker (+), Left tweeter (+)
9	RED/BLK	Lights-on signal
10	WHT/RED	Constant power
11	———	Not used
12	———	Not used
13	———	Not used
14	———	Not used
15	BLU/YEL	Right rear speaker (—)
16	BLU/BLK	Left rear speaker (—)
17	GRY/RED	Passenger's door speaker (—), Right tweeter (—)
18	LT GRN	Driver's door speaker (—), Left tweeter (—)
19	RED	Dash lights brightness controller (In the gauge assembly)
20	BLK	Ground (G403)

*: '05-06 models

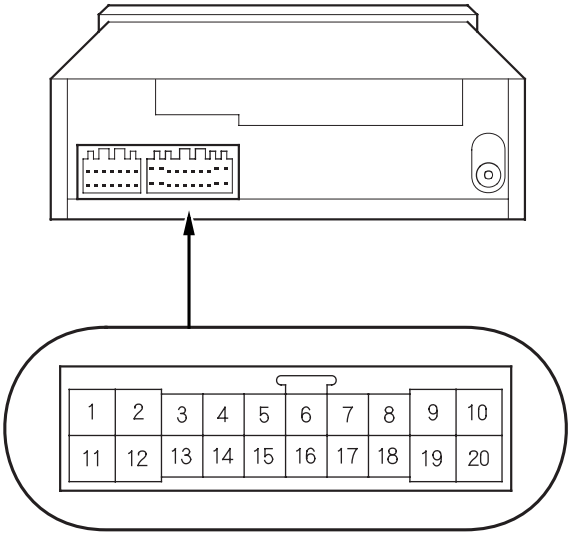

(cont'd)

System Description (cont'd)

Front Stereo Amplifier Connector Inputs and Outputs

With BOSE Sound System

When replacing a stereo amplifier connector, match the wires to the cavities as listed in the following table.

Cavity	Wire	Connects to
1	GRY/RED	Passenger's door speaker (—), Right tweeter (—)
2	GRN/YEL	Passenger's door speaker (+), Right tweeter (+)
3	BLU/RED	Constant power
4	———	Not used
5	BRN	Radio switch
6	LT GRN	Rear stereo amplifier-bass signal (+)
7	RED	Audio unit-right rear (—)
8	GRN	Audio unit-right front (—)
9	BLK	Audio unit-left rear (—)
10	BRN	Audio unit-left front (—)
11	———	Not used
12	BLU/WHT	Left rear speaker (+)
13	BLU/BLK	Left rear speaker (—)
14	BLU/YEL	Right rear speaker (—)
15	PNK	Right rear speaker (+)
16	BLK	Ground (G502)
17	WHT/BLU	Shielding
18	———	Not used
19	GRN/WHT	Rear stereo amplifier-bass signal (—)
20	YEL	Audio unit-right rear (+)
21	ORN	Audio unit-right front (+)
22	WHT	Audio unit-left rear (+)
23	BLU	Audio unit-left front (+)
24	———	Not used
25	LT GRN	Driver's door speaker (—), Left tweeter (—)
26	GRN/BLK	Driver's door speaker (+), Left tweeter (+)

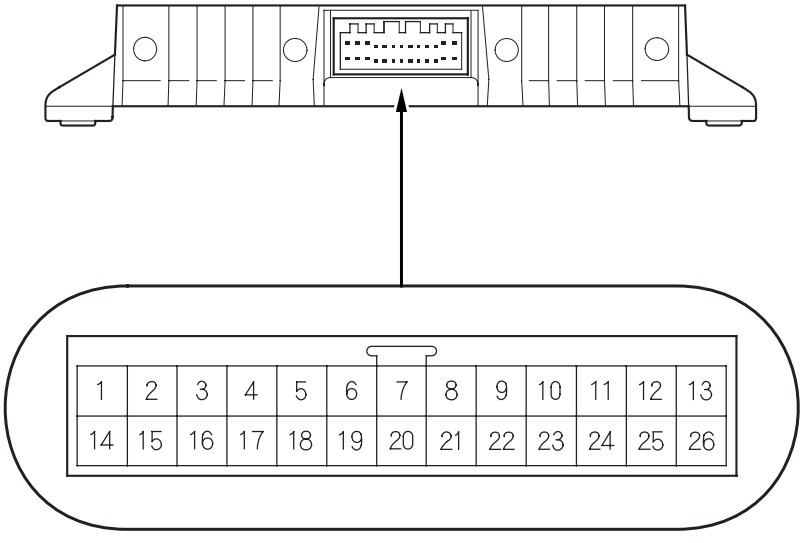

Rear Stereo Amplifier Connector Inputs and Outputs

With BOSE Sound System

When replacing a stereo amplifier connector, match the wires to the cavities as listed in the following table.

Cavity	Wire	Connects to
1	WHT	Rear stereo amplifier relay (power when radio is ON)
2	———	Not used
3	BLK	Ground (G502)
4	LT GRN	Front stereo amplifier-bass (+)
5	———	Not used
6	GRN/WHT	Front stereo amplifier-bass (—)

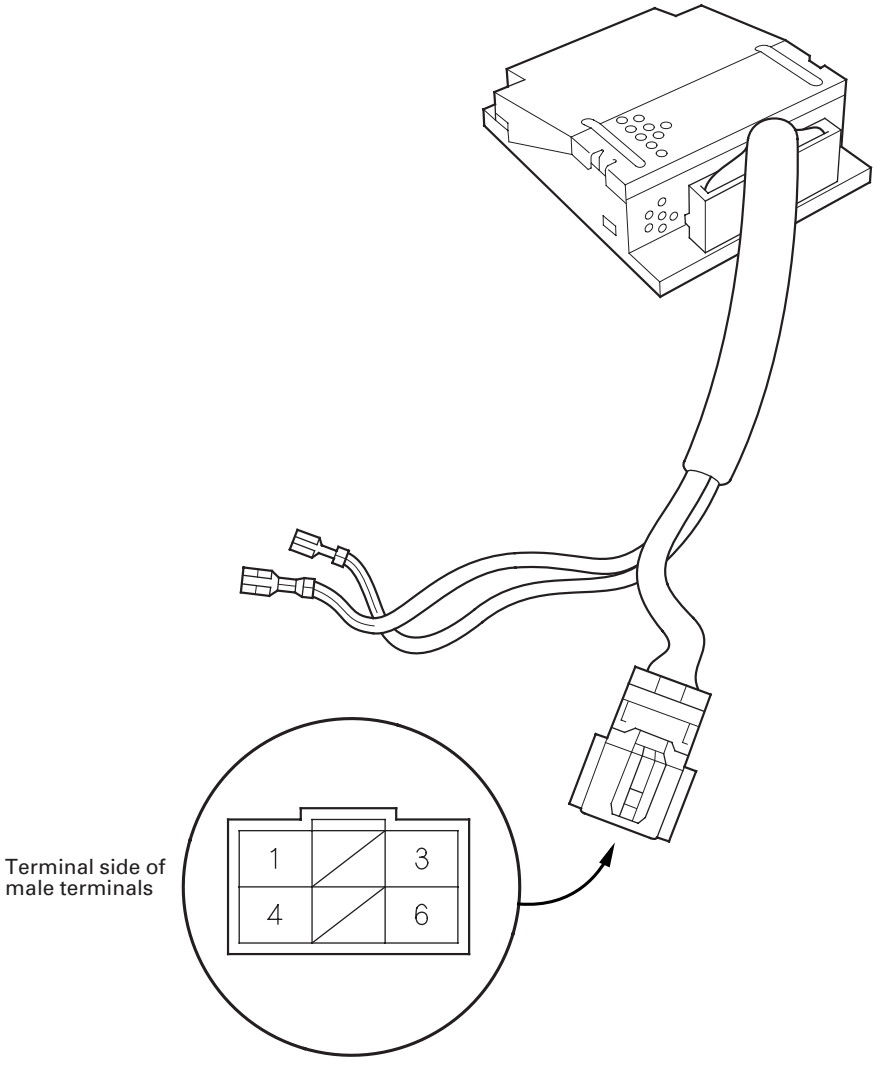

Audio Unit Removal/Installation

With BOSE Sound System

NOTE:
- Put on gloves to protect your hands.
- Take care not to scratch the dashboard and related parts.

1. Make sure you have the anti-theft code for the radio, then write down the frequencies for the radio's preset buttons.

2. Remove the dashboard center lower cover (see page 20-65).

3. Remove the two mounting bolts, then remove the center panel.

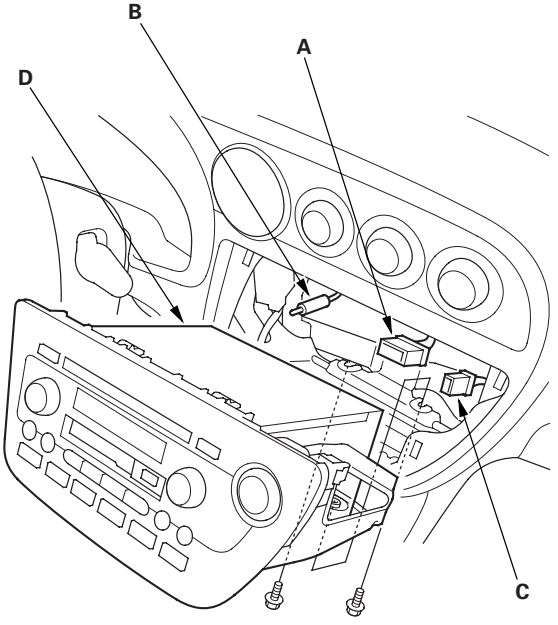

4. Disconnect the audio unit connector (A), antenna lead (B) and hazard warning switch connector (C), then remove the audio unit (D).

5. Remove the four mounting bolts and the audio unit assembly (A) from the audio bracket (B).

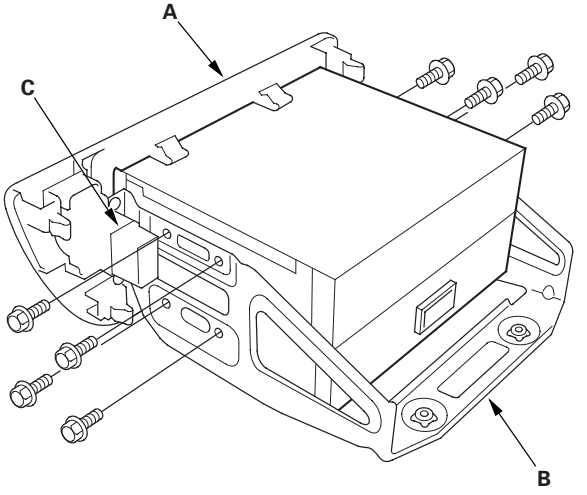

6. Remove the hazard warning switch (C) from the audio unit assembly.

7. Install the hazard warning switch to the audio unit, then install the audio unit in the reverse order of removal, and note these items:

   - Install the hazard warning switch in the audio unit.
   - Make sure the audio unit and hazard warning light switch connectors are plugged in properly, and the antenna lead is connected properly.
   - Enter the anti-theft code for the radio, then enter the customer's radio station presets.

Without BOSE Sound System

NOTE:
- Put on gloves to protect your hands.
- Take care not to scratch the dashboard and related parts.

1. Make sure you have the anti-theft code for the radio, then write down the frequencies for the radio's preset buttons.

2. Remove the dashboard center lower cover (see page 20-65).

3. Remove the two mounting bolts, then remove the center panel.

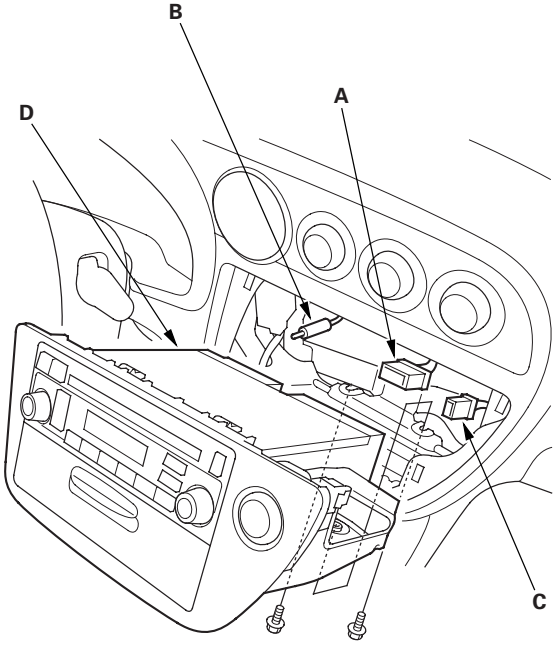

4. Disconnect the audio unit connector (A), antenna lead (B) and hazard warning switch connector (C), then remove the audio unit (D).

5. Remove the four mounting bolts and the audio unit from the audio bracket.

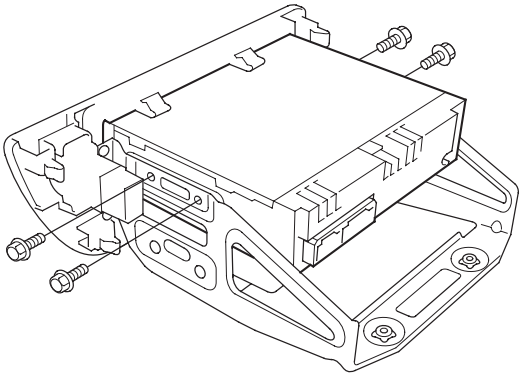

6. Install the audio unit in the reverse order of removal, and note these items:

   - Make sure the audio unit and hazard warning light switch connectors are plugged in properly, and the antenna lead is connected properly.
   - Enter the anti-theft code for the radio, then enter the customer's radio station presets.

Speaker Replacement

Front Speaker-With BOSE Sound System

1. Remove the door panel (see page 20-5).

2. Remove the three mounting screws from the front speaker (A).

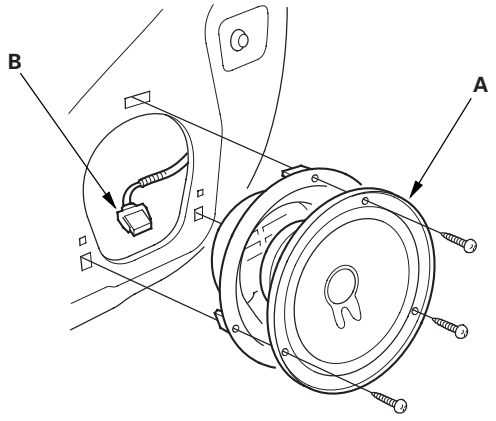

3. Disconnect the 2P connector (B), and remove the speaker.

Front Speaker-Without BOSE Sound System

1. Remove the door panel (see page 20-5).

NOTICE
If you pull the speaker out too far from the door, you will damage the lower clips (A).

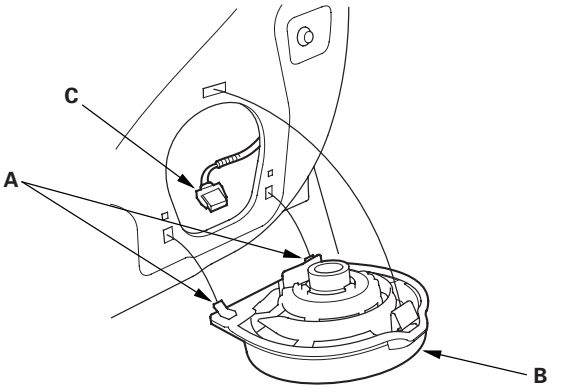

2. Pull the top of the speaker (B) straight out, just enough to release the upper clip. Then lift the speaker straight up to release the lower clips.

3. Disconnect the 2P connector (C), and remove the speaker.

Rear Speaker

1. Remove the speaker grille (A).

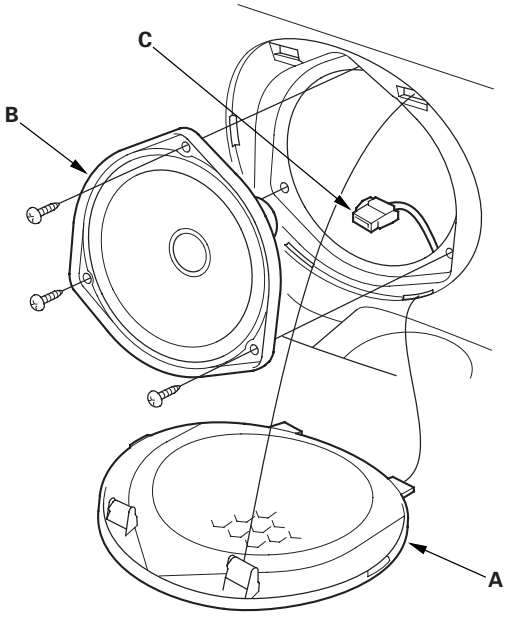

2. Remove the three mounting screws from the rear speaker (B).
3. Disconnect the 2P connector (C), and remove the speaker.

Tweeter

1. Remove the tweeter speaker grille (A) and tweeter (B) as an assembly.

With BOSE Sound System:

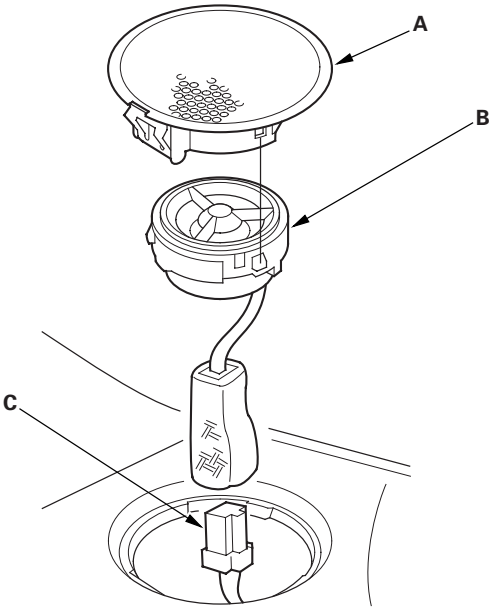

Without BOSE Sound System:

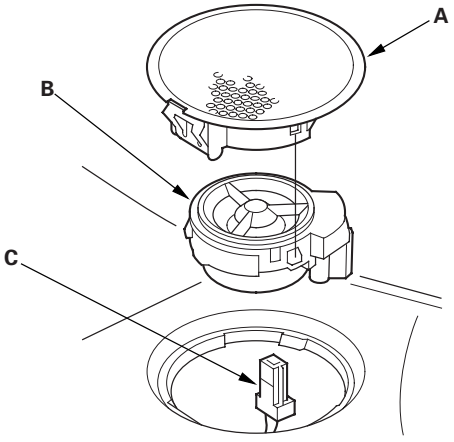

2. Disconnect the 2P connector (C) from the tweeter.
3. Remove the tweeter speaker grille from the tweeter.

Front Stereo Amplifier Replacement

With BOSE Sound System

1. Remove the front passenger's seat (see page 20-75).

2. Remove the two mounting nuts from the amplifier brackets, then remove the front stereo amplifier from the front passenger's seat.

3. Disconnect the front stereo amplifier 26P connector (A) and rear stereo amplifier relay 4P connector (B) from the front stereo amplifier (C) and rear stereo amplifier relay (D).

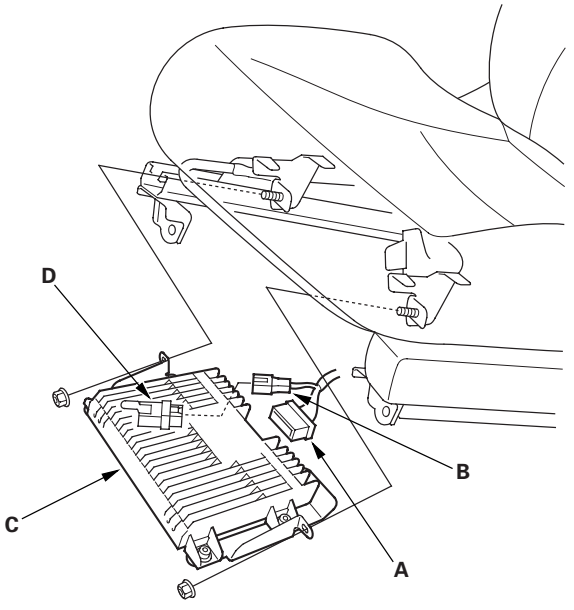

4. Remove the four mounting nuts from the amplifier brackets.

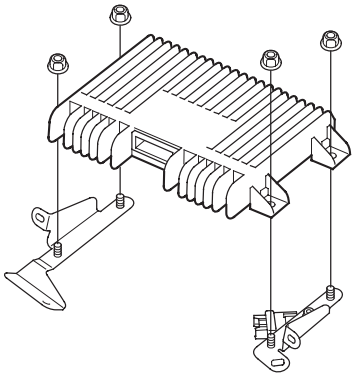

5. Install the front stereo amplifier in the reverse order of removal.

Rear Stereo Amplifier and Woofer Replacement

With BOSE Sound System

1. Open the hatch.

2. Remove the cargo area floor (see page 20-53).

3. Remove the anchor bolt (A) from the rear stereo amplifier and woofer box (B).

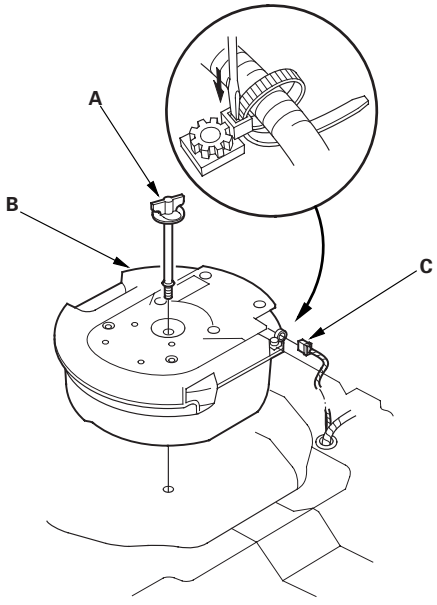

4. Disconnect the 6P connector (C) from the rear stereo amplifier.

5. Remove the six mounting screws from the cover, then remove the cover.

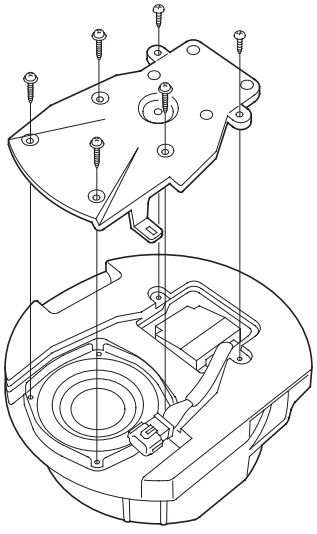

6. Disconnect the connectors (A) from the woofer (B).

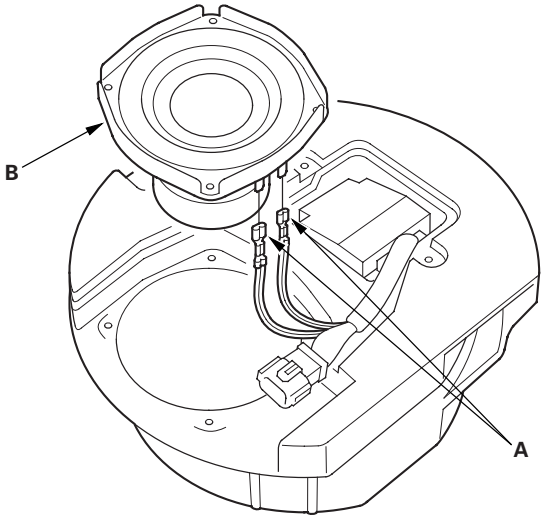

7. Remove the rear amplifier.

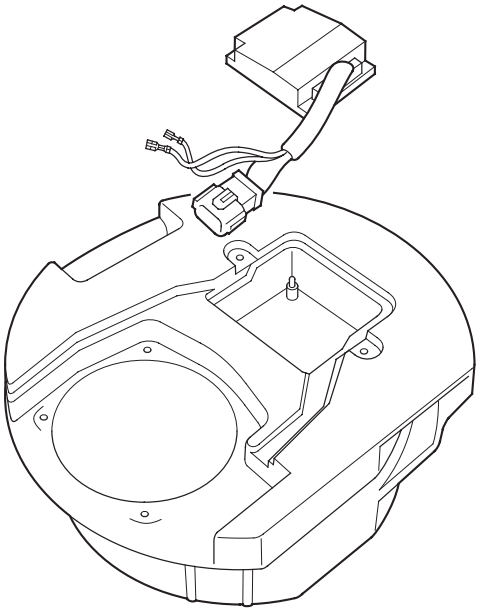

8. Install the rear stereo amplifier and woofer in the reverse order of removal.

Window Antenna Test

1. Wrap aluminum foil (A) around the tip of the tester probe (B) as shown.

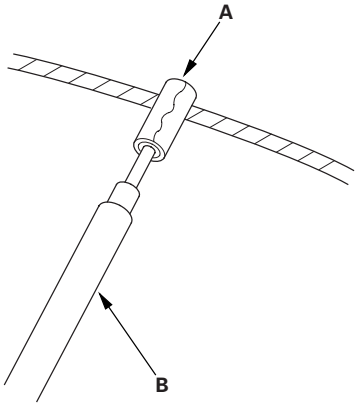

2. Touch one tester probe to the window antenna terminal (A), and move the other tester probe along the antenna wires to check that continuity exists.

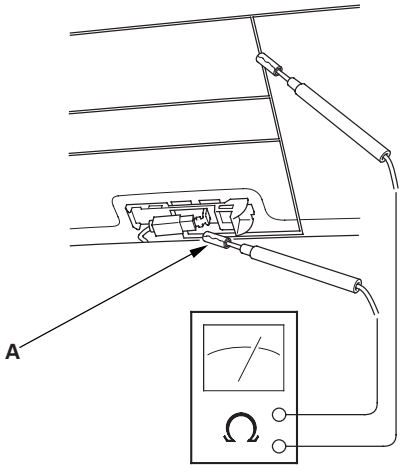

Window Antenna Repair

NOTE: To make an effective repair, the broken section must be no longer than 1 inch.

1. Lightly rub the area around the broken section (A) with fine steel wool, then clean it with isopropyl alcohol.

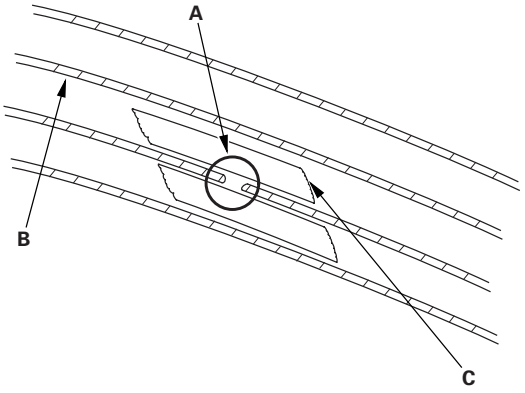

2. Carefully mask above and below the broken portion of the window antenna wire (B) with cellophane tape (C).

3. Thoroughly mix the silver conductive paint (commercially available defogger grid repair material). Using a small brush, apply a heavy coat of the silver conductive paint (A) extending about 1/8'' on both sides of the break. Allow 30 minutes to dry.

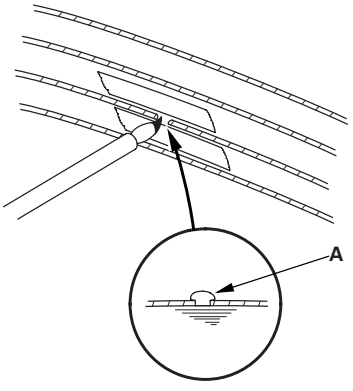

4. Check for continuity in the repaired wire.

5. Apply a second coat of paint in the same way. Let it dry 3 hours before removing the tape.

Component Location Index

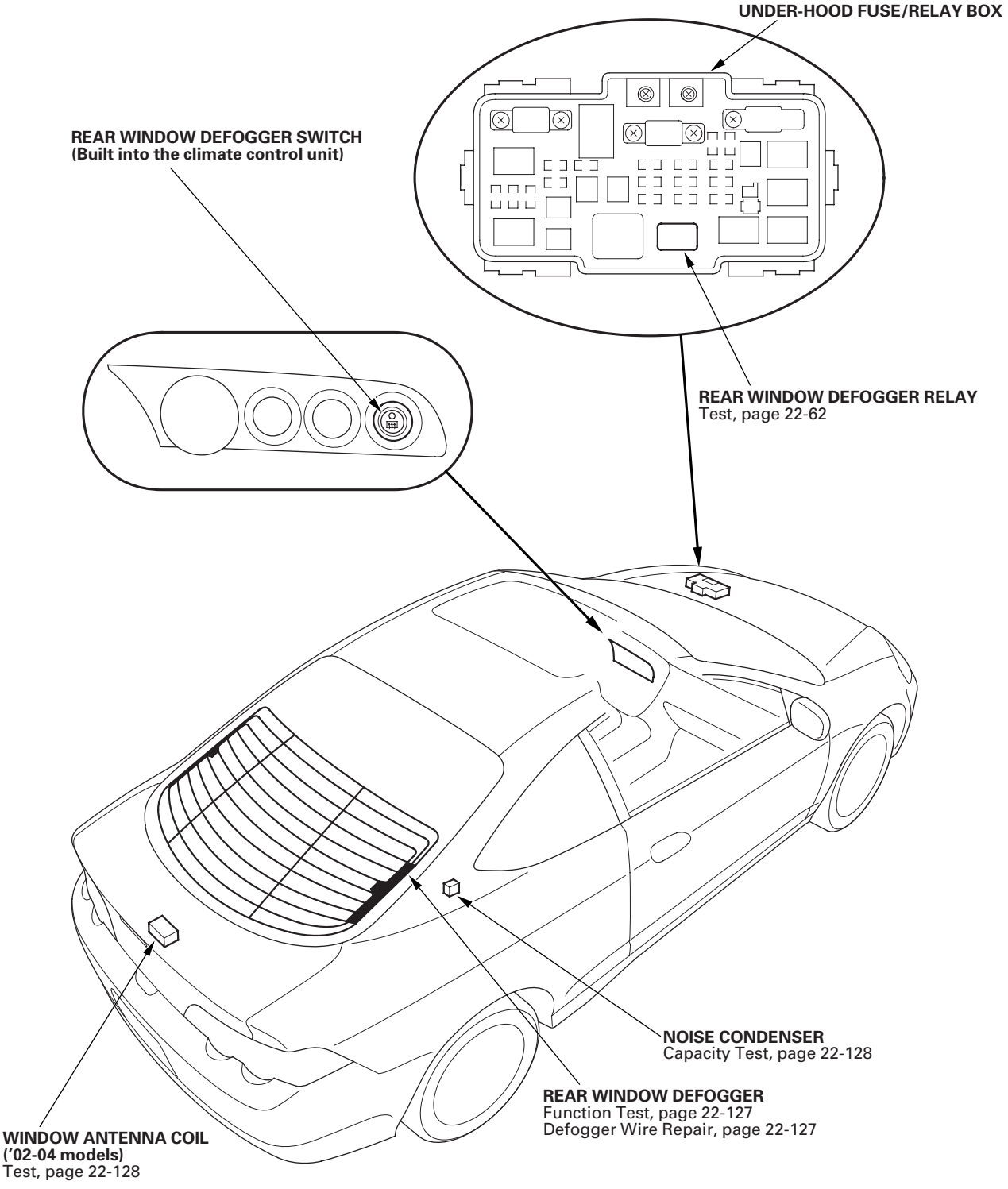

Circuit Diagram

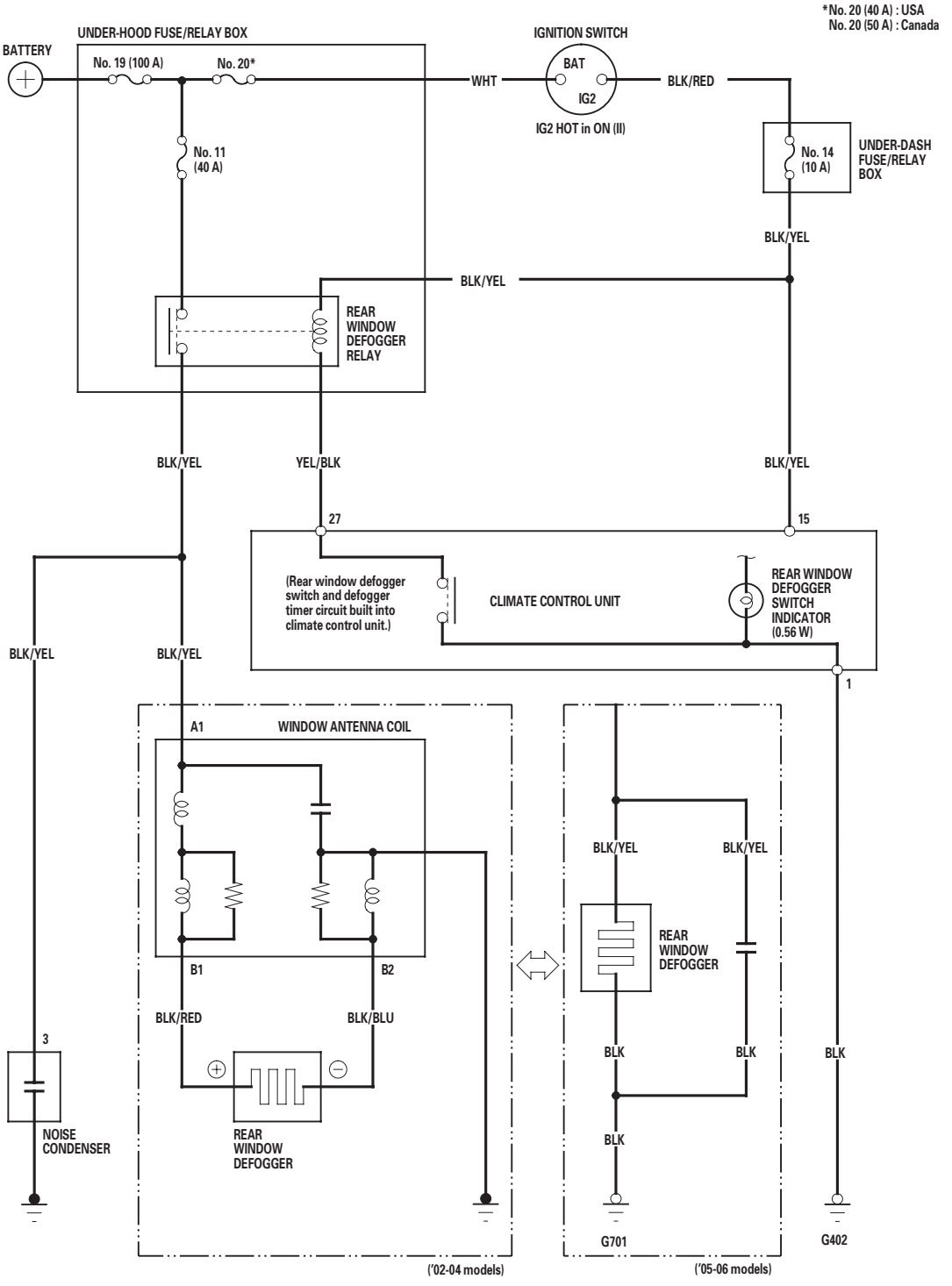

Function Test

NOTE:
- Be careful not to scratch or damage the defogger wires with the tester probe.
- Before testing, check the No. 11 (40 A) fuse in the under-hood fuse/relay box and the No. 14 (10 A) fuse in the under-dash fuse/relay box.

1. Check for voltage between the positive terminal (A) and body ground with the ignition switch and defogger switch ON.
   There should be battery voltage.

   - If there is no voltage, check for:
     – Faulty defogger relay.
     – Faulty window antenna coil ('02-04 models).
     – An open in the BLK/RED, BLK/YEL, or YEL/BLK wire.
     – Faulty climate control unit.
   - If there is battery voltage, go to step 2.

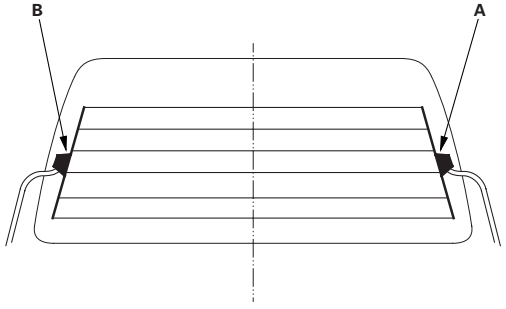

2. Check for voltage between the positive terminal (A) and the negative terminal (B).
   If there is no voltage, check for:

   - An open in the BLK/BLU wire.
   - Faulty window antenna coil.
   - Poor body ground at the window antenna coil mounting bolt.

3. Touch the voltmeter positive probe to the halfway point of each defogger wire, and the negative probe to the negative terminal.
   There should be about 6 V with the ignition switch and the defogger switch ON.

   - If the voltage is as specified, the defogger wire is OK.
   - If the voltage is not as specified, repair the defogger wire.
     – If it is more than 6 V, there is a break in the negative half of the wire.
     – If it is less than 6 V, there is a break in the positive half of the wire.

Defogger Wire Repair

NOTE: To make an effective repair, the broken section must be no longer than 1 inch.

1. Lightly rub the area around the broken section (A) with fine steel wool, then clean it with isopropyl alcohol.

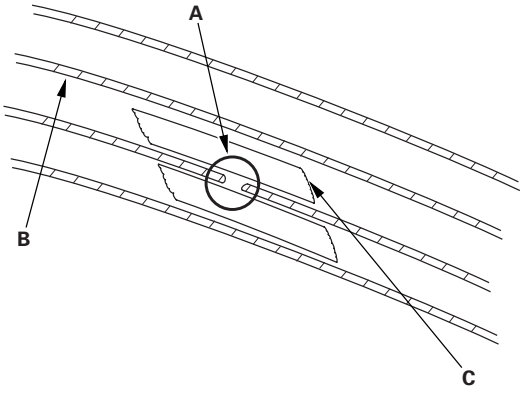

2. Carefully mask above and below the broken portion of the defogger wire (B) with transparent tape (C).

3. Thoroughly mix the silver conductive paint (commercially available defogger grid repair material). Using a small brush, apply a heavy coat of the silver conductive paint extending about 1/8'' on both sides of the break. Allow 30 minutes to dry.

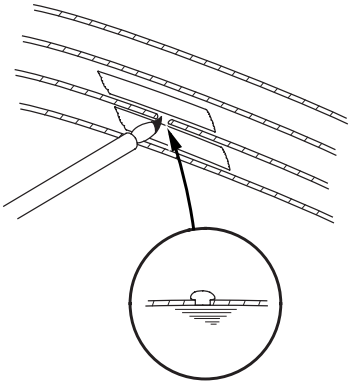

4. Check for continuity in the repaired wire.

5. Apply a second coat of paint in the same way. Let it dry 3 hours before removing the tape.

Window Antenna Coil Test

'02-04 models

1. Open the hatch.
2. Remove the hatch trim panel (see page 20-54).
3. Disconnect the 1P connector (A) and 2P connector (B) from the window antenna coil (C).

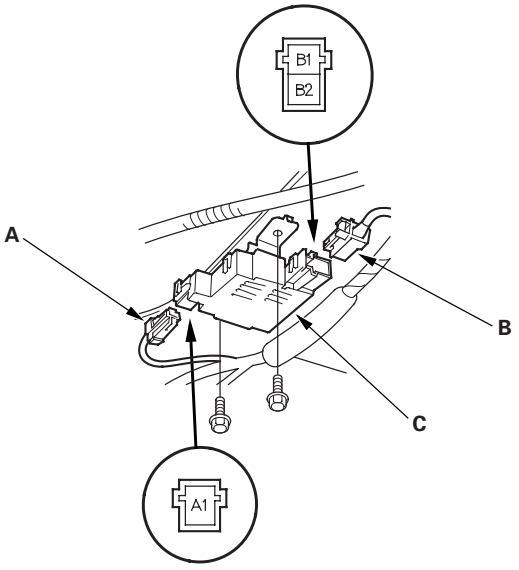

4. Check for continuity between the terminal B2 and body ground, and between terminal A1 and B1. There should be continuity.
   If there is no continuity, loosen the two bolts, and replace the window antenna coil.

Noise Condenser Capacity Test

1. Remove the right side trim panel (see page 20-51).
2. Disconnect the 3P connector (A) from the noise condenser.

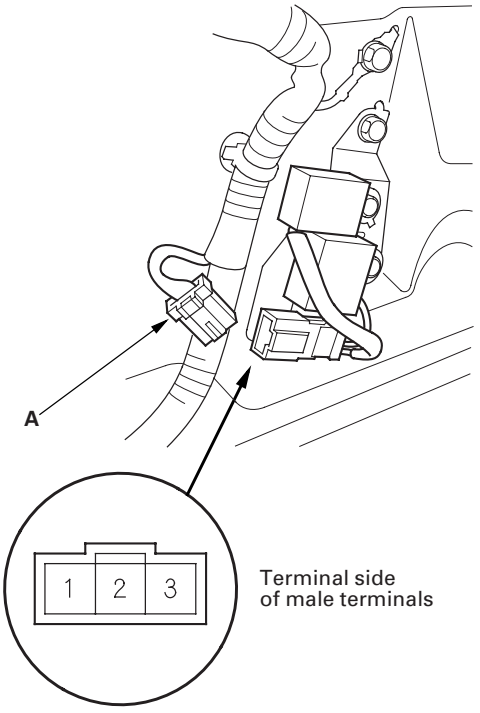

3. Use a commercially available condenser tester. Connect the condenser tester probes and measure the condenser capacity.

   No. 1 and No. 2 terminal capacity: 1.0 microfarads
   No. 3 terminal capacity: 2.2 microfarads

4. If capacity is not within the specification, replace the noise condenser.

Component Location Index

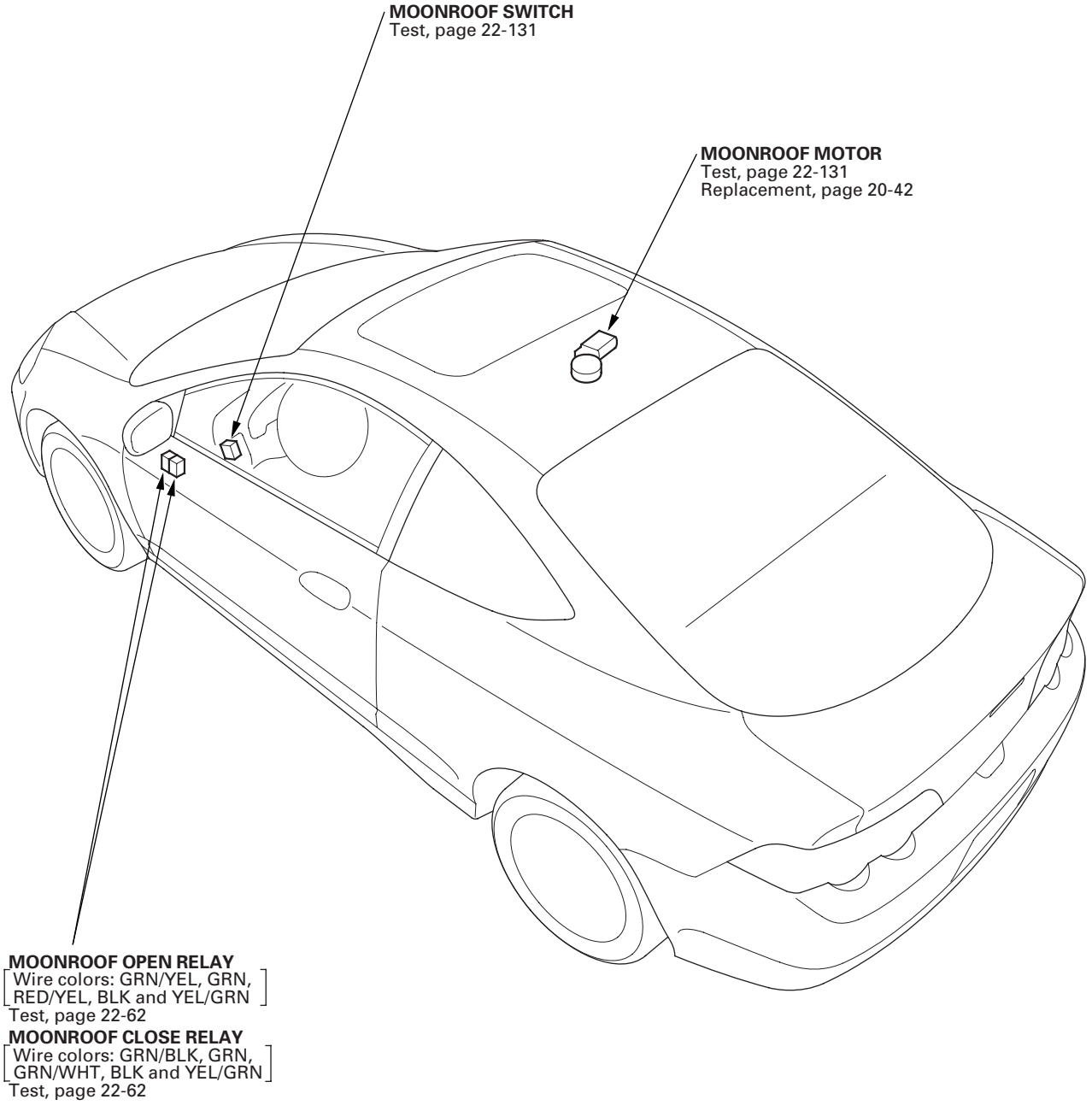

Circuit Diagram

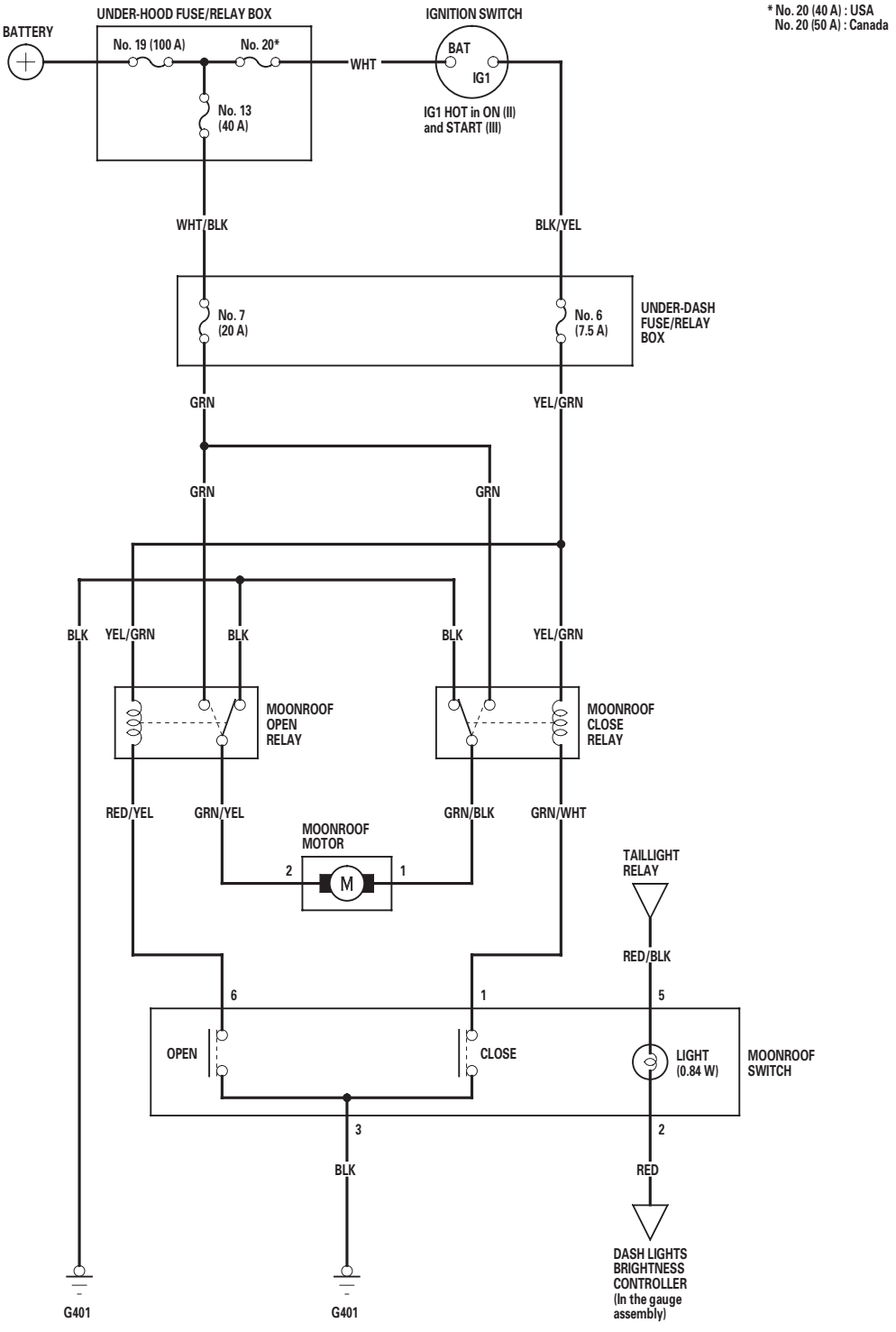

Switch Test/Replacement

1. Carefully pry out the driver's switch panel (see page 20-64).

2. Disconnect the 6P connector (A) from the moonroof switch (B), then remove the switch.

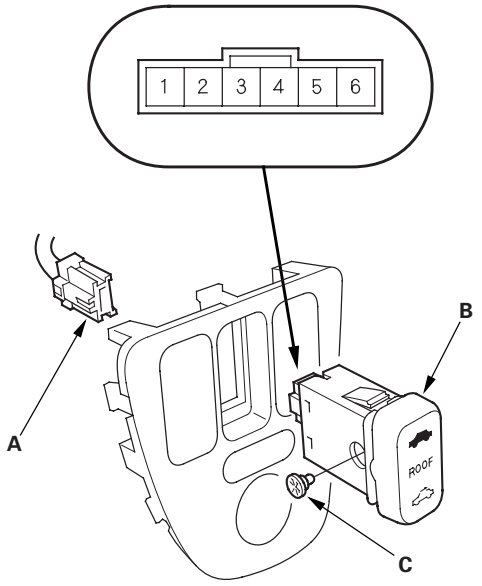

3. Check for continuity between the terminals in each switch position according to the table.

Terminal / Position	2		5	1	3	6
CLOSE	○	○	○	○	○	
OPEN					○	○

4. If the continuity is not as specified, replace the illumination bulbs (C) or the switch.

Motor Test

1. Remove the headliner (see page 20-55).

2. Disconnect the 2P connector (A) from the moonroof motor (B).

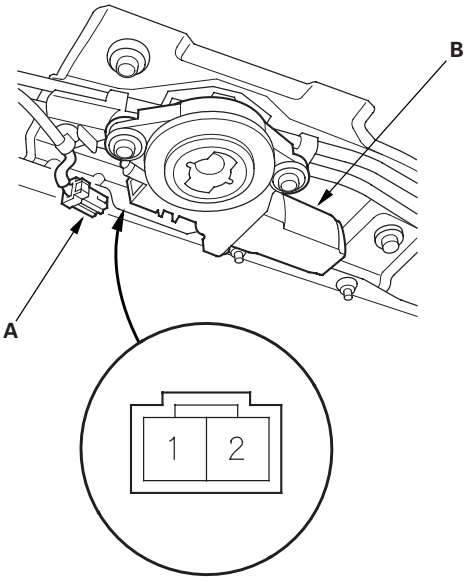

3. Check the motor by connecting power and ground according to the table.

Terminal / Position	1	2
OPEN	⊖	⊕
CLOSE	⊕	⊖

4. If the motor does not run, replace it.

   NOTE: See closing force check (see page 20-48) for motor clutch test.

Component Location Index

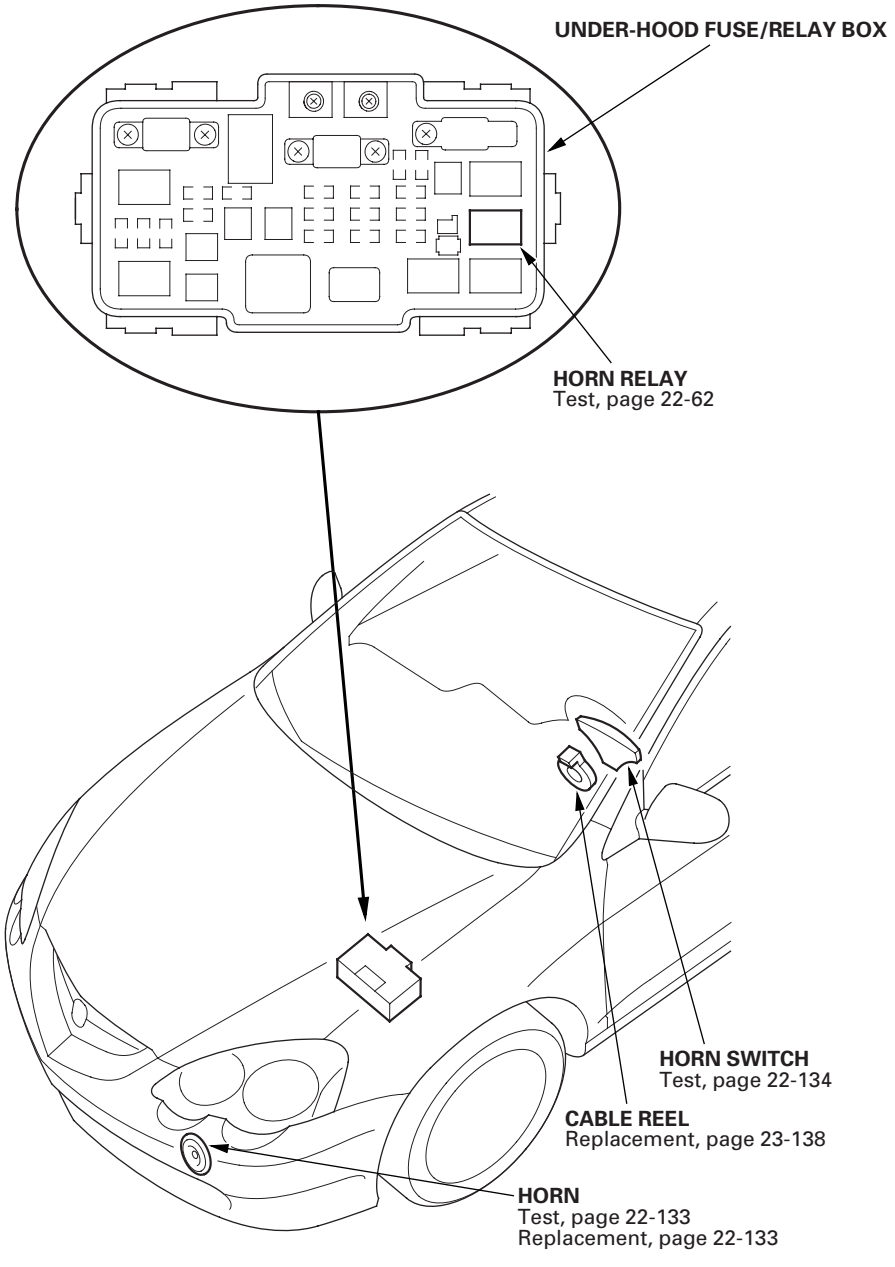

Circuit Diagram

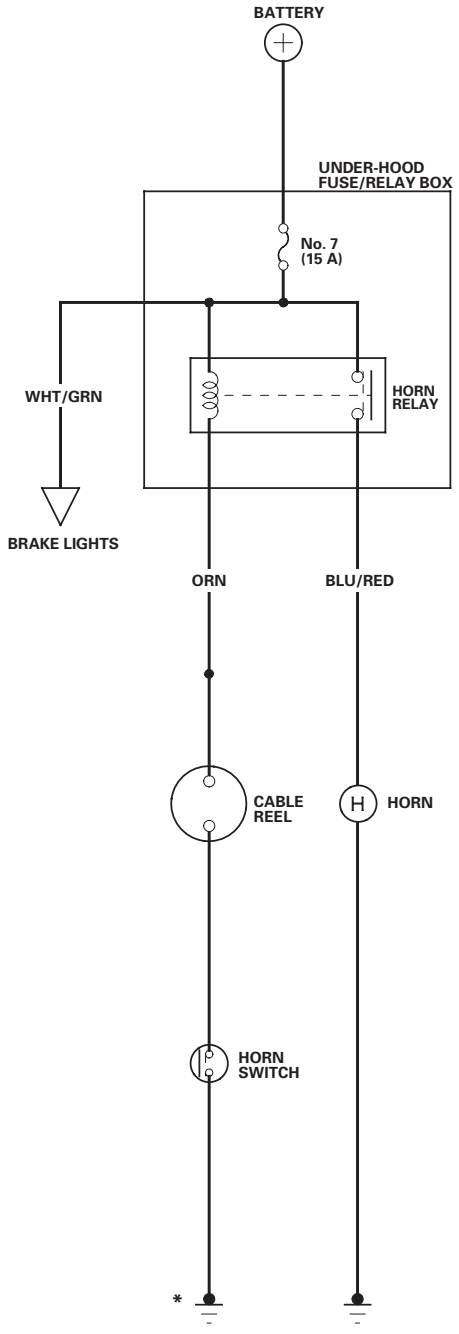

* Grounds through steering column.

Horn Test/Replacement

1. Remove the front bumper.
   - ’02-04 models (see page 20-90)
   - ’05-06 models (see page 20-91)
2. Disconnect the 1P connector (A), and remove the horn (B).

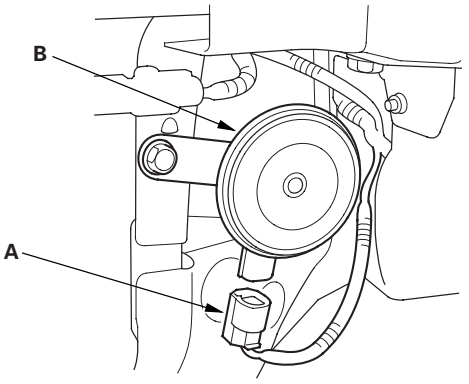

3. Test the horn by connecting battery power to the terminal (A) and ground to the bracket (B). The horn should sound.

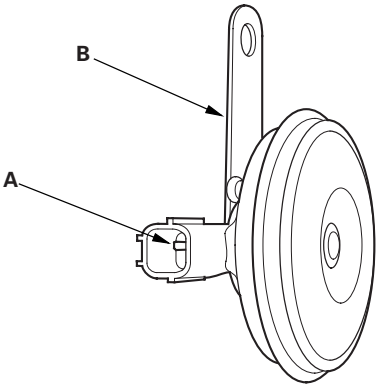

4. If it fails to sound, replace it.
5. Install the horn in the reverse order of removal.

Horn Switch Test

1. Remove the steering column covers (see page 17-25).

2. Disconnect the dashboard wire harness 5P connector (A) from the cable reel (B).

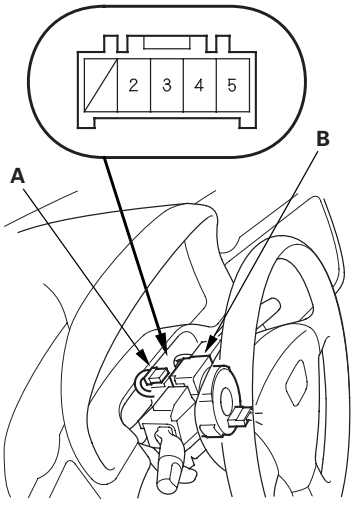

3. Using a jumper wire, connect the dashboard wire harness 5P connector No. 2 terminal to body ground.

   - If the horn sounds, go to step 4.
   - If the horn does not sound, check these items:
     – Horn relay
     – No. 7 (15 A) fuse in the under-hood fuse/relay box
     – Horn (see page 22-133)
     – An open in the wire

4. Check for continuity between the cable reel No. 2 terminal and body ground with the horn switch pushed. There should be continuity. If there is no continuity, go to step 5.

5. Reconnect the dashboard wire harness 5P connector (A), and disconnect the horn switch positive 1P connector (B).

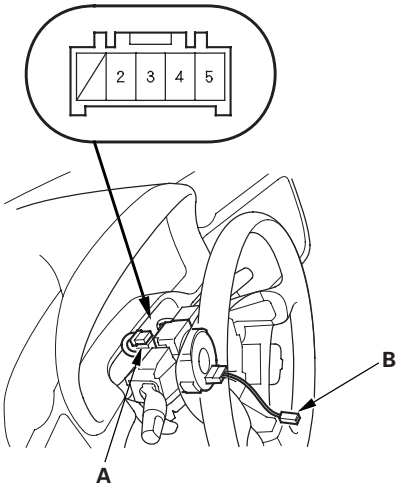

6. Using a jumper wire, connect the horn switch positive 1P connector to ground.

   - If the horn sounds, go to step 7.
   - If the horn does not sound, replace the cable reel.

7. Reconnect the horn switch positive 1P connector, using a jumper wire, connect the steering wheel to body ground.

8. Close the contact between the horn plate and the contact place.

   - If the horn sounds, replace the steering column.
   - If the horn does not sound, replace the horn and contact plate.

Component Location Index

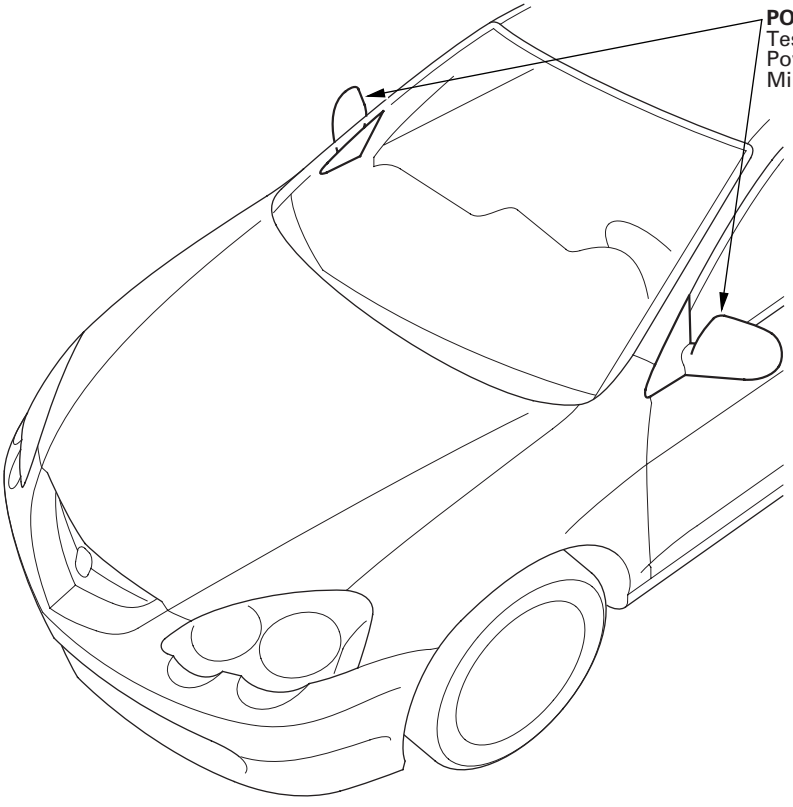

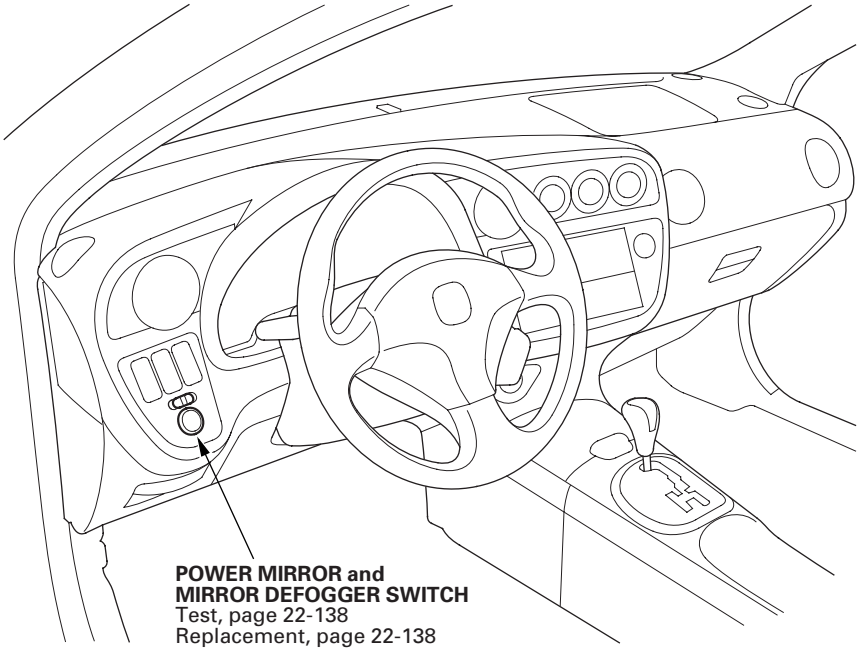

Circuit Diagram

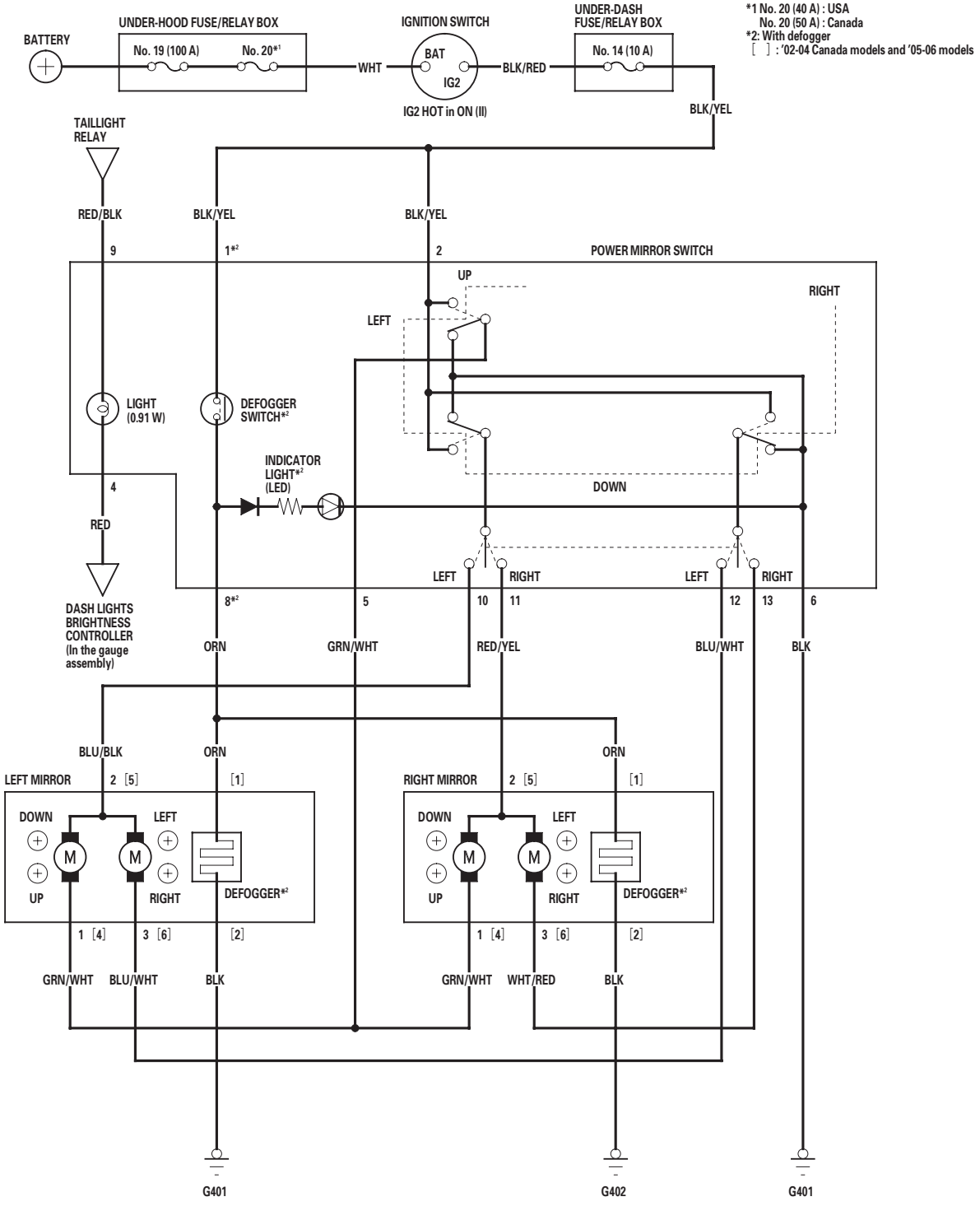

Function Test

1. Carefully pry out the driver's switch panel (see page 20-64).

2. Disconnect the 13P connector (A) from the power mirror switch (B).

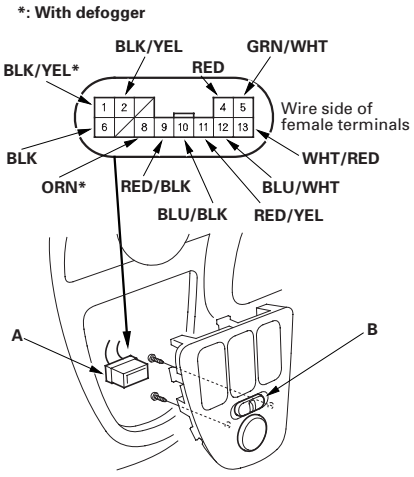

3. Remove the two screws and the power mirror switch.

4. Choose the appropriate test based on the symptom:

   - Both mirrors don't work, go to step 5.
   - Left mirror doesn't work, go to step 7.
   - Right mirror doesn't work, go to step 8.
   - Defogger doesn't work, go to step 9.

Both mirrors

5. Check for voltage between the No. 2 terminal and body ground with the ignition switch ON (II). There should be battery voltage.

   - If there is no battery voltage, check for:
     – Blown No. 14 (10 A) fuse in the under-dash fuse/relay box.
     – An open in the BLK/YEL wire.
   - If there is battery voltage, go to step 6.

6. Check for continuity between the No. 6 terminal and body ground.
   There should be continuity.

   - If there is no continuity, check for:
     – An open in the BLK wire.
     – Poor ground (G 401).
   - If there is continuity, check both mirrors individually as described in the next column.

Left mirror

7. Connect the No. 2 terminal to the No. 10 terminal, and the No. 5 (or No. 12) terminal to body ground with jumper wires. The left mirror should tilt down (or swing left) with the ignition switch ON (II).

   - If the mirror does not tilt down (or does not swing left), check for an open in the GRN/WHT (or BLU/WHT) wire between the left mirror and the 13P connector. If the wire is OK, check the left mirror actuator.
   - If the mirror neither tilts down nor swings left, repair the BLU/BLK wire.
   - If the mirror works properly, check the mirror switch (see page 22-138).

Right mirror

8. Connect the No. 2 terminal to the No. 11 terminal, and the No. 5 (or No. 13) terminal to body ground with jumper wires. The right mirror should tilt down (or swing left) with the ignition switch ON (II).

   - If the mirror does not tilt down (or does not swing left), check for an open in the GRN/WHT (or WHT/RED) wire between the right mirror and the 13P connector.
     If the wire is OK, check the right mirror actuator.
   - If the mirror neither tilts down nor swings left, repair the RED/YEL wire.
   - If the mirror works properly, check the mirror switch (see page 22-138).

Defogger

9. Connect the No. 1 and No. 8 terminals with a jumper wire, and check for voltage between the No. 1 terminal of the mirror connector and body ground. There should be battery voltage and both mirrors should warm up with the ignition switch ON (II).

   - If there is no voltage or neither warms up, check for:
     – An open in the BLK/YEL, BLK, or ORN wire.
     – Blown No. 14 (10 A) fuse in the under-dash fuse/relay box.
     – Poor ground (G 401, G402).
   - If only one fails to warm up, check its defogger.
   - If both warm up, check the defogger switch.

Power Mirror Switch Test/ Replacement

1. Carefully pry out the driver's switch panel (see page 20-64).

2. Disconnect the 13P connector (A) from the power mirror switch (B).

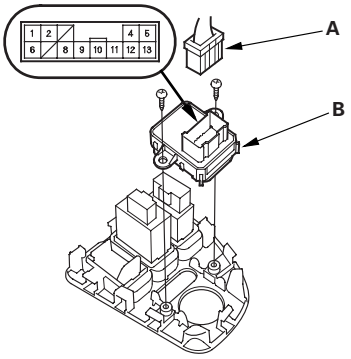

3. Remove the two screws and the switch.

4. Check for continuity between the terminals in each switch position according to the table.

Mirror Switch:

	Terminal / Position	2	5	6	10	11	12	13
L	UP	○	○	○	○			
L	DOWN	○	○	○	○			
L	LEFT	○		○	○		○	
L	RIGHT	○		○	○		○	
R	UP	○	○	○		○		
R	DOWN	○	○	○		○		
R	LEFT	○		○		○		○
R	RIGHT	○		○		○		○

Defogger Switch:

Terminal / Position	1	8
ON	○	○
OFF		

5. If the continuity is not as specified, replace the switch.

Power Mirror Actuator Test

1. Remove the door panel (see page 20-5).

2. Disconnect the 3P*1 or 6P*2 connector (A) from the power mirror actuator (B).

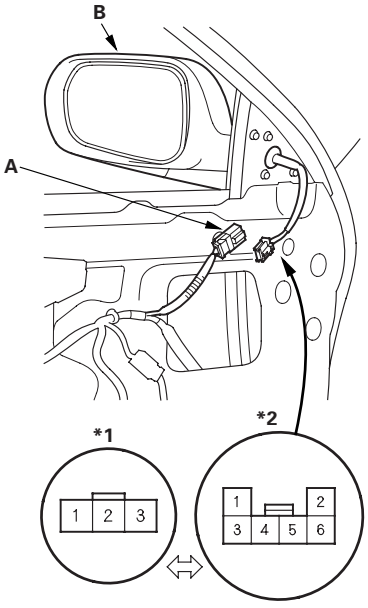

Wire side of female terminals

∗1: '02-04 USA models
∗2: '02-04 Canada models and '05-06 models

3. Check actuator operation by connecting power and ground according to the table.

Terminal / Position	1 [4]	2 [5]	3 [6]
TILT UP	⊕	⊖	
TILT DOWN	⊖	⊕	
SWING LEFT		⊕	⊖
SWING RIGHT		⊖	⊕

[ ] : **'02-04 Canada models and '05-06 models**

4. If the mirror fails to work properly, replace the mirror actuator.

Defogger Test

5. Check for continuity between the No. 1 and No. 2 terminals of the 6P connector. There should be continuity.

6. If the continuity is not as specified, replace the mirror actuator.

Power Mirror Actuator Replacement

1. Remove the mirror holder, and disconnect the mirror defogger connectors* (see page 20-18).
   *: With defogger

2. Remove the power mirror (see page 20-17).

3. Disconnect the 3P*1 or 6P*2 connector from the mirror, and record the terminal locations and wire colors.
   *1: '02-04 USA models
   *2: '02-04 Canada models and '05-06 models

4. Cut the wire harness with cutter, and remove the gasket (A).

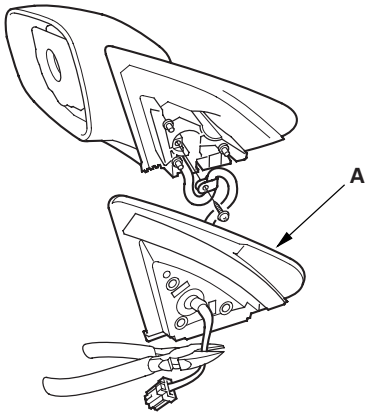

5. Remove the screw from the harness clip (A).

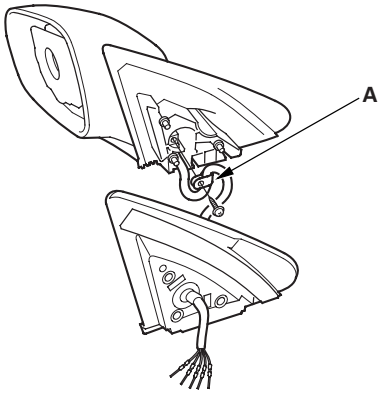

6. Remove the three screws, and separate the mirror housing (A) from the bracket (B).

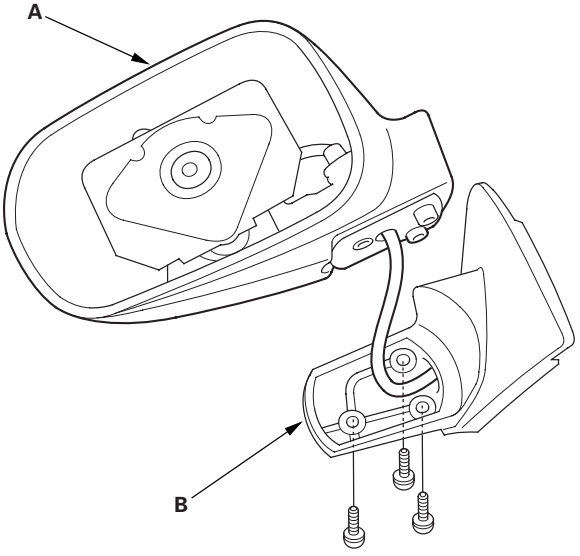

7. Remove the three screws and the actuator (A).

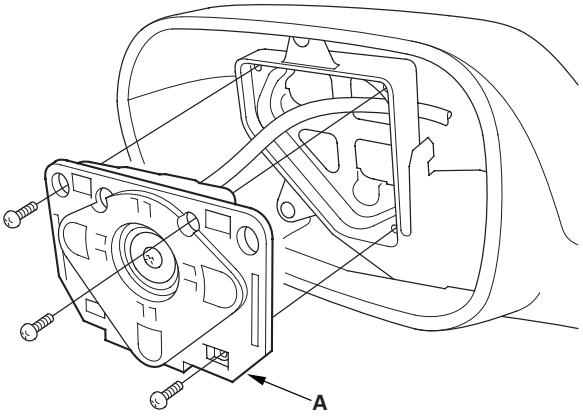

(cont'd)

Component Location Index

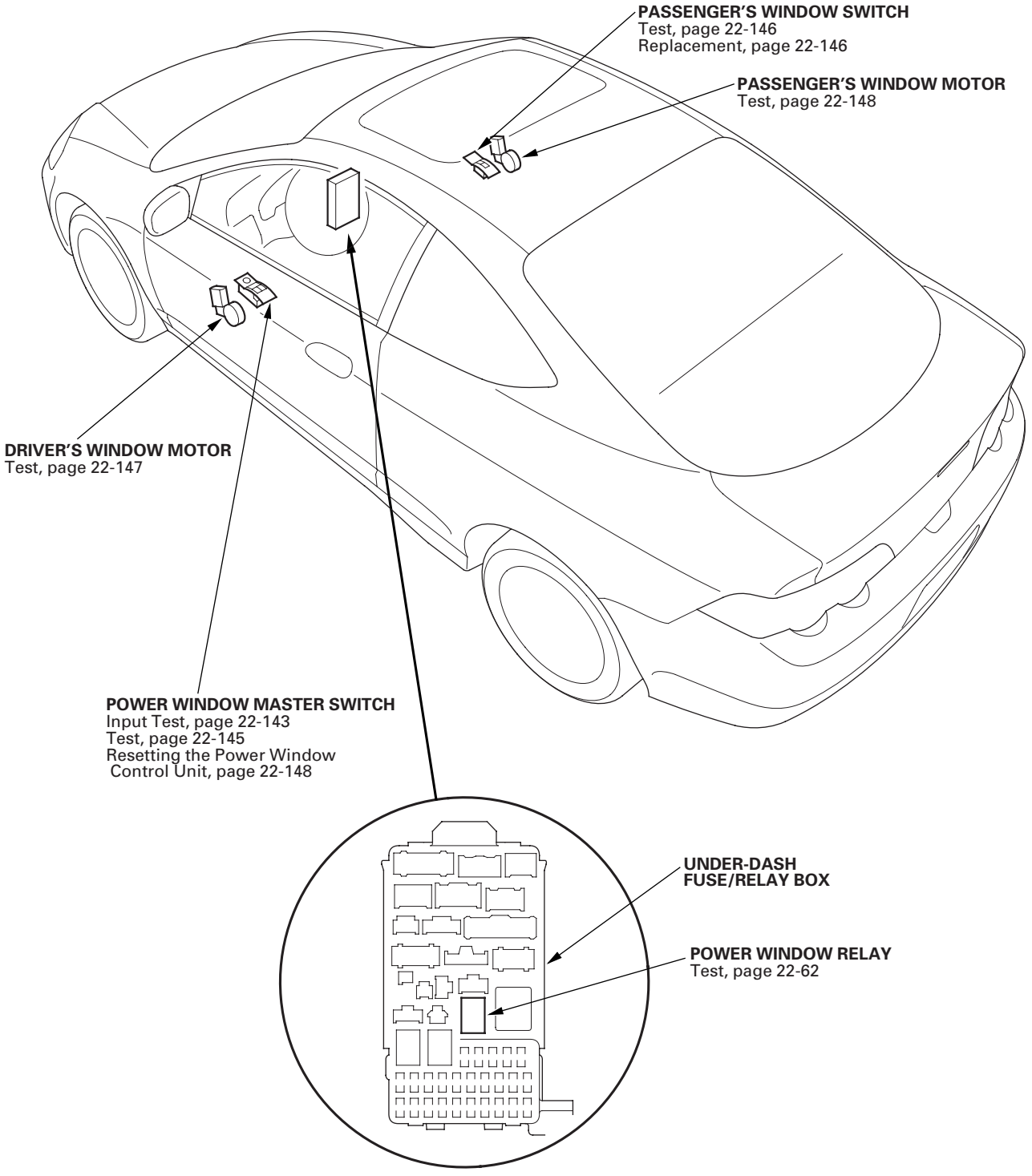

Circuit Diagram

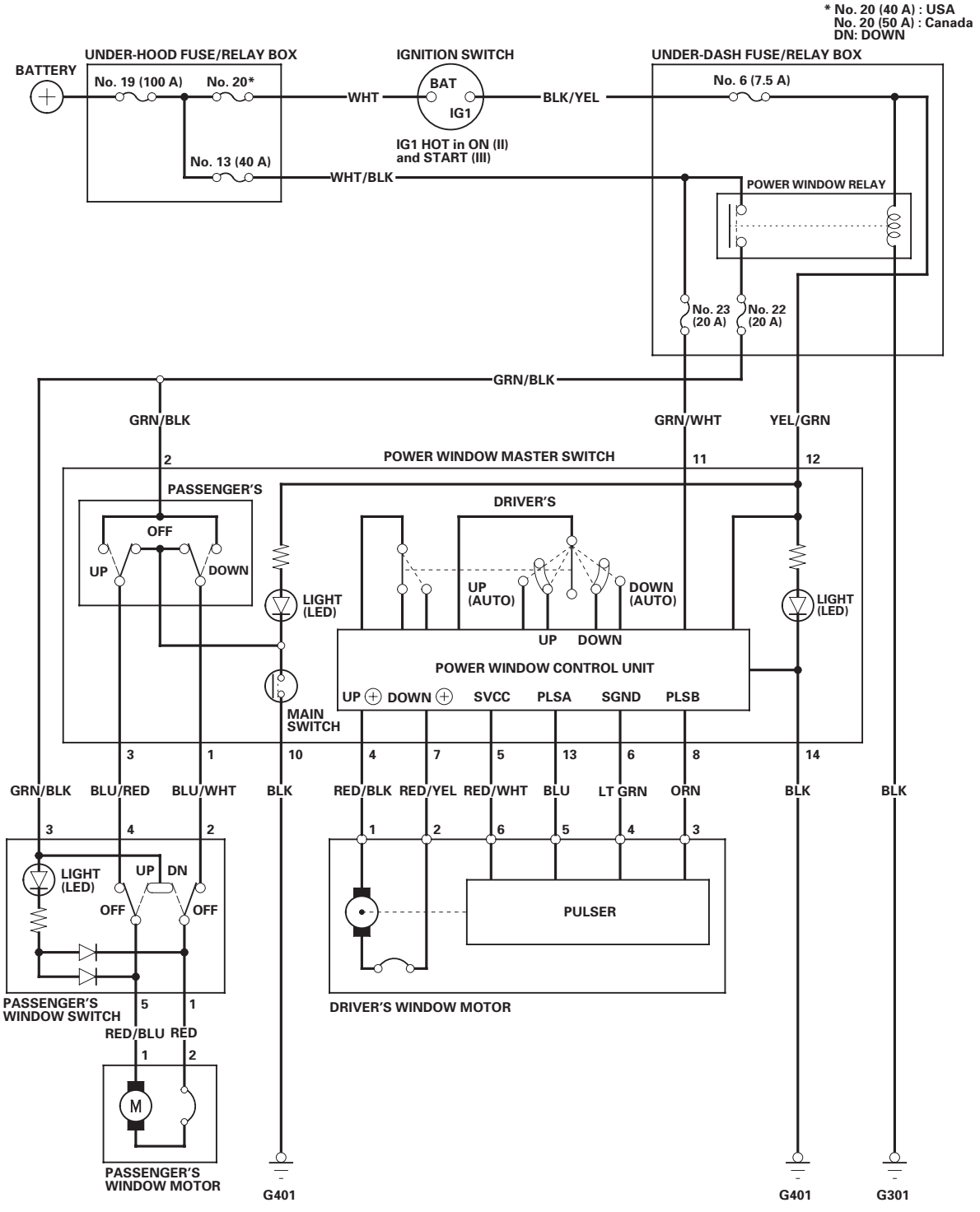

Master Switch Input Test

NOTE: The power window control unit is built into the power window master switch, and it only controls the driver's window operations.

1. Remove the switch panel from the door panel (see page 20-5).

2. Disconnect the 14P connector (B) from the master switch (A).

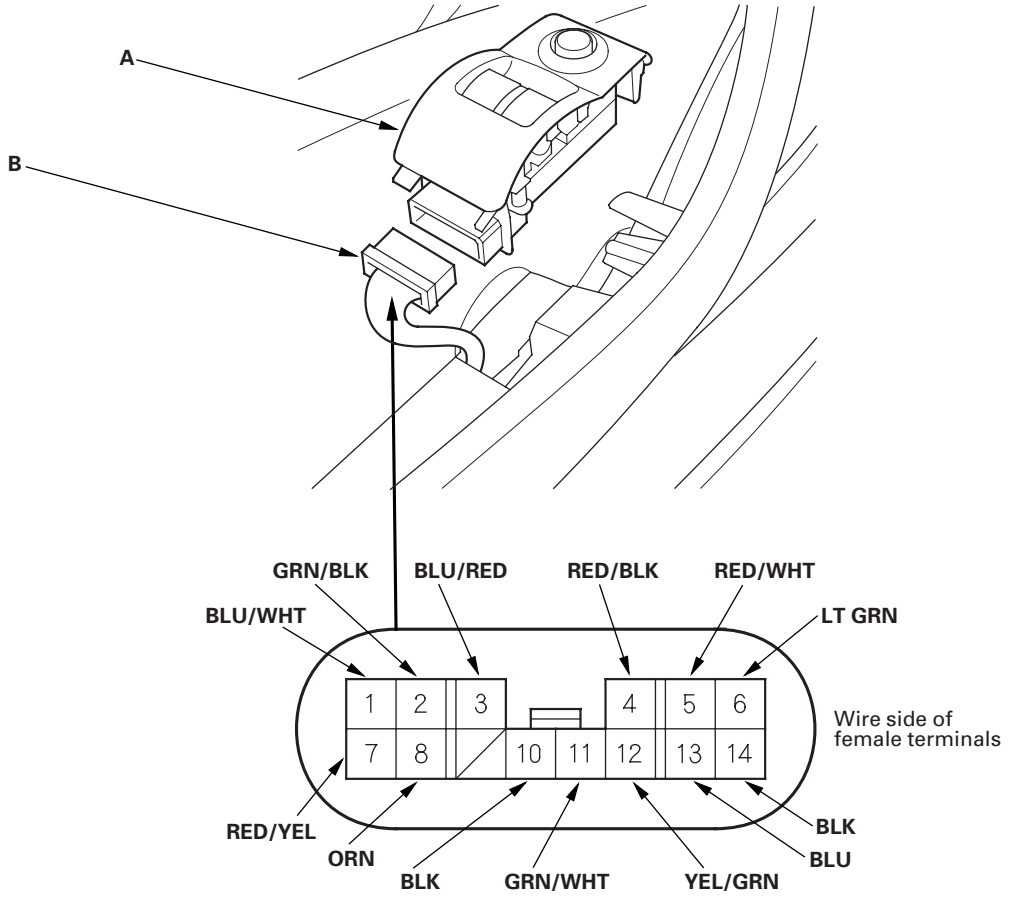

3. Inspect the connector and socket terminals to be sure they are all making good contact.

   - If the terminals are bent, loose or corroded, repair them as necessary, and recheck the system.
   - If the terminals look OK, go to step 4.

(cont'd)

Master Switch Input Test (cont'd)

4. With the connector still disconnected, make these input tests at the connector.

- If any test indicates a problem, find and correct the cause, then recheck the system.
- If all the input tests prove OK, go to step 5.

Cavity	Wire	Test condition	Test: Desired result	Possible cause if result is not obtained
10 14	BLK	Under all conditions	Check for continuity to ground: There should be continuity.	• Poor ground (G401) • An open in the wire
12	YEL/GRN	Ignition switch ON (II)	Check for voltage to ground: There should be battery voltage.	• Blown No. 6 (7.5 A) fuse in the under-dash fuse/relay box • An open in the wire
11	GRN/WHT	Under all conditions	Check for voltage to ground: There should be battery voltage.	• Blown No. 23 (20 A) fuse in the under-dash fuse/relay box • An open in the wire
2	GRN/BLK	Ignition switch ON (II)	Check for voltage to ground: There should be battery voltage.	• Blown No. 13 (40 A) fuse in the under-hood fuse/relay box • Blown No. 6 (7.5 A) fuse in the under-dash fuse/relay box • Blown No. 22 (20 A) fuse in the under-dash fuse/relay box • Faulty power window relay • Faulty power window relay ground or wire • An open in the wire
4 7	RED/BLK RED/YEL	Connect the No. 7 and No. 11 terminals, and the No. 4 and No. 14 terminals.	Check for driver's window motor operation: It should run (the driver's window moves down).	• Poor ground (G401) • Faulty driver's window motor • An open in the wire
1 3	BLU/WHT BLU/RED	Connect the No. 1 and No. 2 terminals, and the No. 3 and No. 10 terminals, and turn the ignition switch ON (II).	Check for passenger's window motor operation: It should run (the passenger's window moves down).	• Poor ground (G401) • Fault passenger's window motor • Fault passenger's window switch • An open in the wire

5. Reconnect the 14P connector to the switch, and perform the following input tests.

- If any test indicates a problem, find and correct the cause, then recheck the system.
- If all the input tests prove OK, the control unit must be faulty; replace the power window master switch.

Cavity	Wire	Test condition	Test: Desired result	Possible cause if result is not obtained
5	RED/WHT	Ignition switch ON (II)	Check for voltage to ground: There should be 5 V or more.	• Faulty power window master switch • Short to ground in the wire
6	LT GRN	Under all conditions	Check for voltage to ground: There should be less than 1 V .	An open in the wire
13	BLU	Ignition switch ON (II), and the driver's window switch AUTO DOWN	Check for voltage between the No. 13 and No. 6 terminals: There should be 0 V—about 5 V—0 V—about 5 V repeatedly (a digital voltmeter reads about 2.5 V while the window moves).	• Blown No. 6 (7.5 A) fuse in the under-dash fuse/relay box • Blown No. 23 (20 A) fuse in the under-dash fuse/relay box • Faulty power window relay • Faulty power window master switch • Short to ground in the wire
8	ORN	Ignition switch ON (II), and the driver's window switch AUTO DOWN	Check for voltage between the No. 8 and No. 6 terminals: There should be 0 V—about 5 V—0 V—about 5 V repeatedly (a digital voltmeter reads about 2.5 V while the window moves).	

Master Switch Test/Replacement

1. Remove the switch panel from the door panel (see page 20-5).

2. Disconnect the 14P connector from the power window master switch (A).

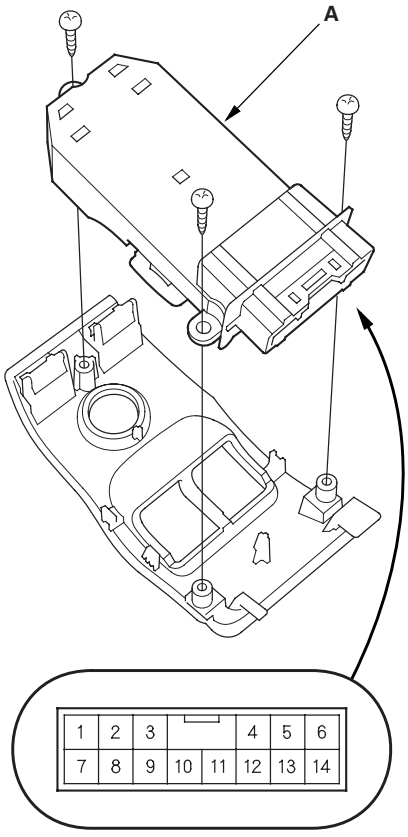

3. Remove the three screws and power window master switch.

4. Check for continuity between the terminals in each switch position according to the table.

Driver's Switch
The driver's switch is combined with the control unit so you cannot isolate the switch to test it.
Instead, run the master switch input test procedures (see page 22-143). If the tests are normal, the driver's switch must be faulty; replace it.

Passenger's Switch:

Position	Terminal / Main Switch	1	2	3	10
OFF	ON	○	—	○	○
	OFF	○	—	○	
UP	ON	○	○	○	○
	OFF		○	○	
DOWN	ON	○	○	○	○
	OFF	○	○		

5. If the continuity is not as specified, replace the passenger's switch.

Passenger's Window Switch Test/Replacement

1. Remove the switch panel from the door panel (see page 20-5).

2. Disconnect the 5P connector (A) from the passenger's power window switch (B).

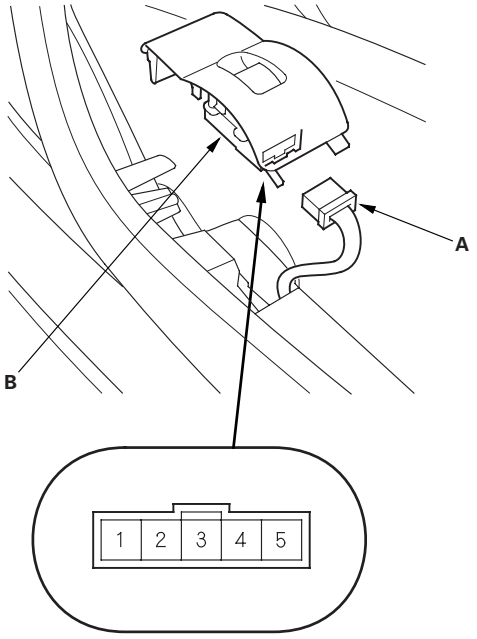

3. Remove the two screws and passenger's power window switch.

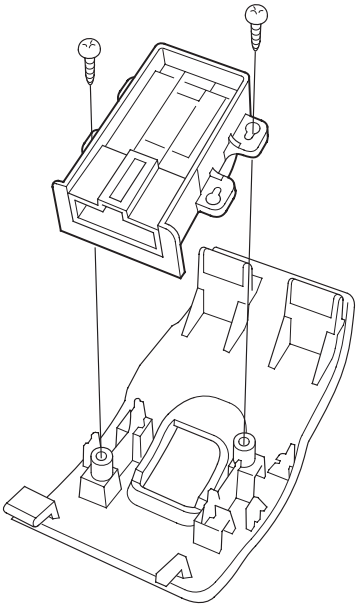

4. Check for continuity between the terminals in each switch position according to the table.

Position \ Terminal	1	2	3	4	5
UP	○	○			
			○		○
OFF	○	○			
				○	○
DOWN	○		○		
				○	○

5. If the continuity is not as specified, replace the switch.

Driver's Window Motor Test

Motor Test

1. Remove the driver's door panel (see page 20-5).

2. Disconnect the 6P connector (A) from the driver's window motor.

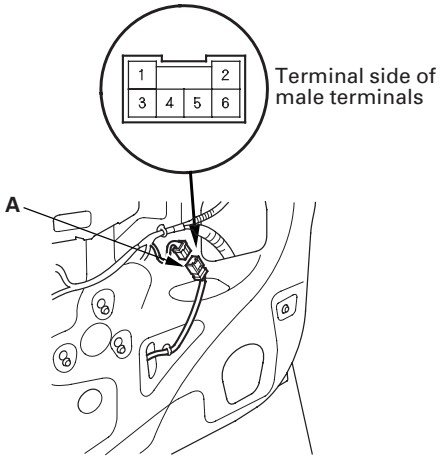

3. Test the motor in each direction by connecting battery power and ground according to the table.

NOTICE
To prevent damage to the motor, disconnect one test lead as soon as the motor stops running.

Terminal / Direction	1	2
UP	⊕	⊖
DOWN	⊖	⊕

4. If the motor does not run or fails to run smoothly, replace it.

Pulser Test

1. Reconnect the 6P connector to the window motor, and reconnect the 14P connector to the power window master switch.

2. Check for voltage between the terminals.

   - There should be battery voltage between the No. 6 (+) and No. 4 (−) terminals when the ignition switch is turned ON (II).
   - Connect an analog voltmeter between the No. 5 (+) and No. 4 (−) terminals, and run the window motor down or up. The voltmeter needle should move back and forth alternately (a digital voltmeter should show the average voltage between 0−5 V).
   - Connect an analog voltmeter between the No. 3 (+) and No. 4 (−) terminals, and run the window motor down or up. The voltmeter needle should move back and forth alternately (a digital voltmeter should show the average voltage between 0−5 V).

3. If the voltage is not as specified, replace the driver's window motor.

Resetting the Power Window Control Unit

Resetting the power window control unit is required after performing the following procedures:

- Disconnecting the battery
- Removing the No. 6 (7.5 A) and/or the No. 23 (20 A) fuses in the under-dash fuse/relay box
- Disconnecting the driver's door wire harness
- Disconnecting the power window control unit

1. Turn the ignition switch ON (II).
2. Move the driver's window all the way down holding the driver's switch in the AUTO DOWN position; when the window reaches the bottom, hold the driver's window switch in the AUTO DOWN position for 2 seconds.
3. Move the driver's window all the way up holding the driver's switch in the AUTO UP position; when the window reaches the top, hold the driver's window switch in the UP position for 2 seconds.
4. If the window does not work in AUTO, repeat steps 1 through 3.

Passenger's Window Motor Test

1. Remove the passenger's door panel (see page 20-5).
2. Disconnect the 2P connector (A) from the passenger's power window motor.

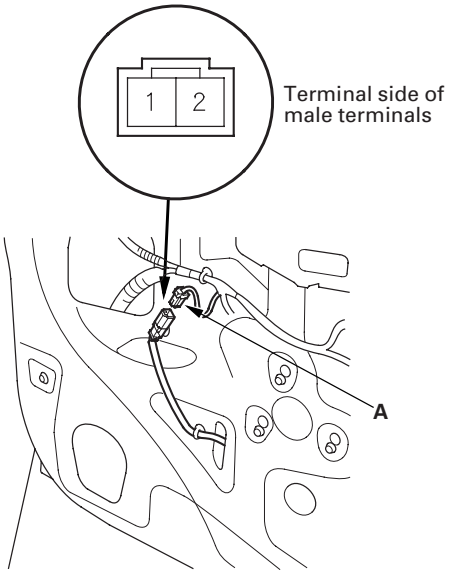

3. Test the motor in each direction by connecting battery power and ground according to the table.

NOTICE
To prevent damage to the motor, disconnect one lead as soon as the motor stops running.

Terminal / Direction	1	2
UP	⊕	⊖
DOWN	⊖	⊕

4. If the motor does not run or fails to run smoothly, replace it.

Component Location Index

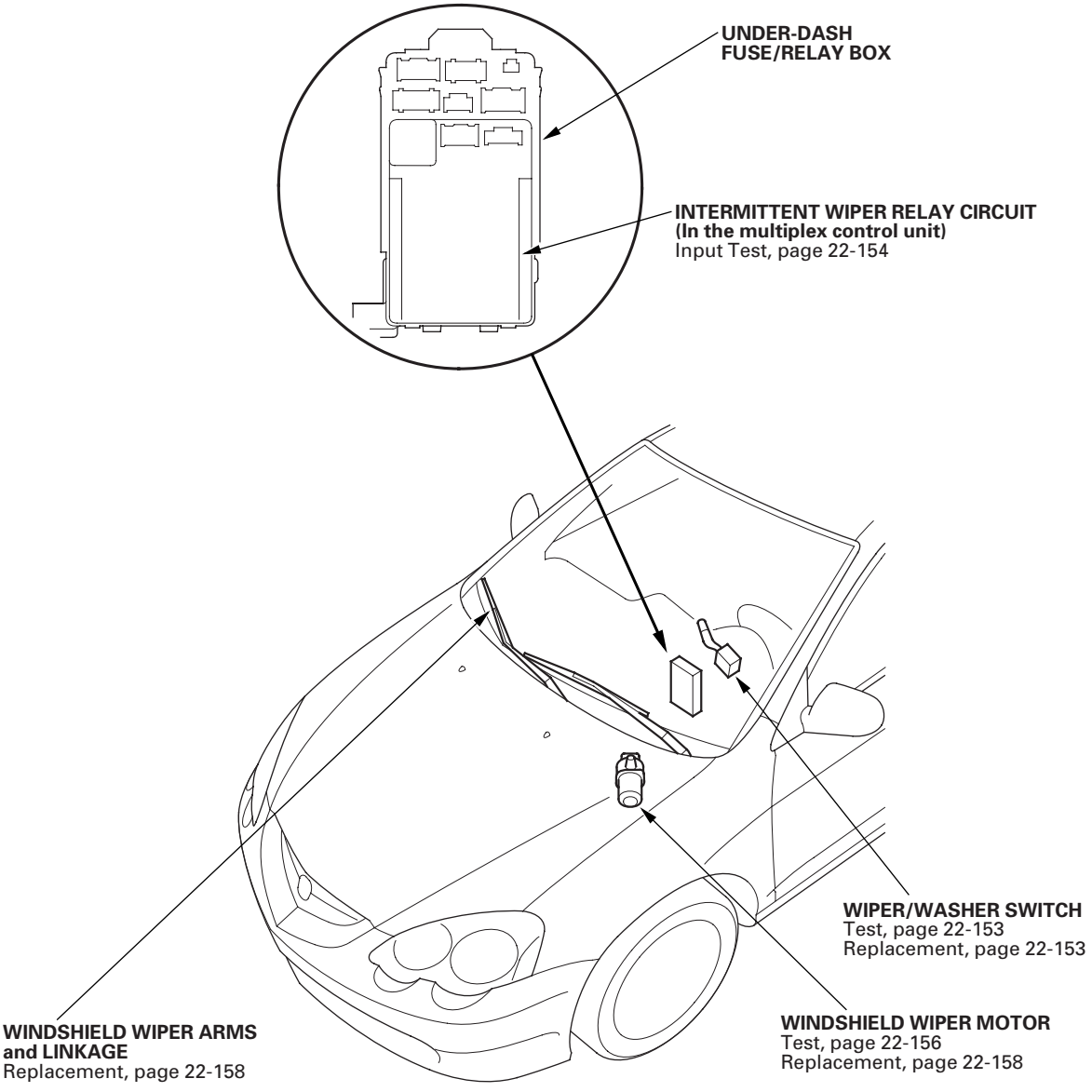

(cont'd)

Component Location Index (cont'd)

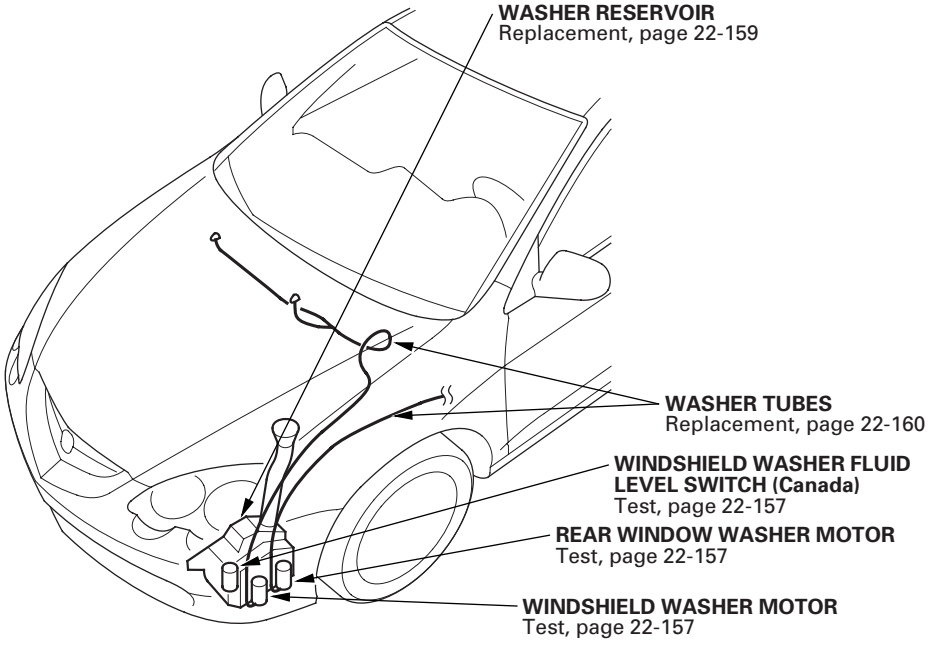

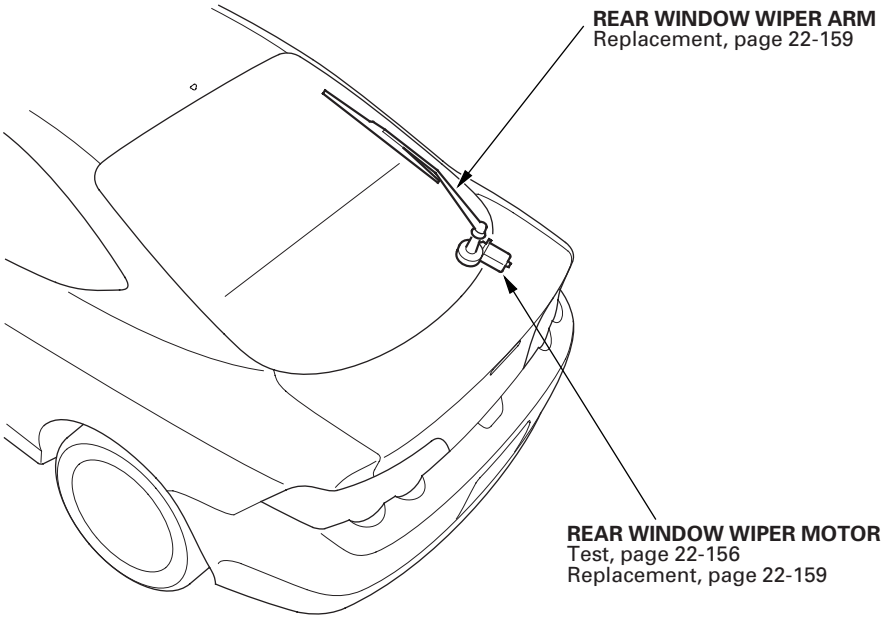

Circuit Diagram - Windshield

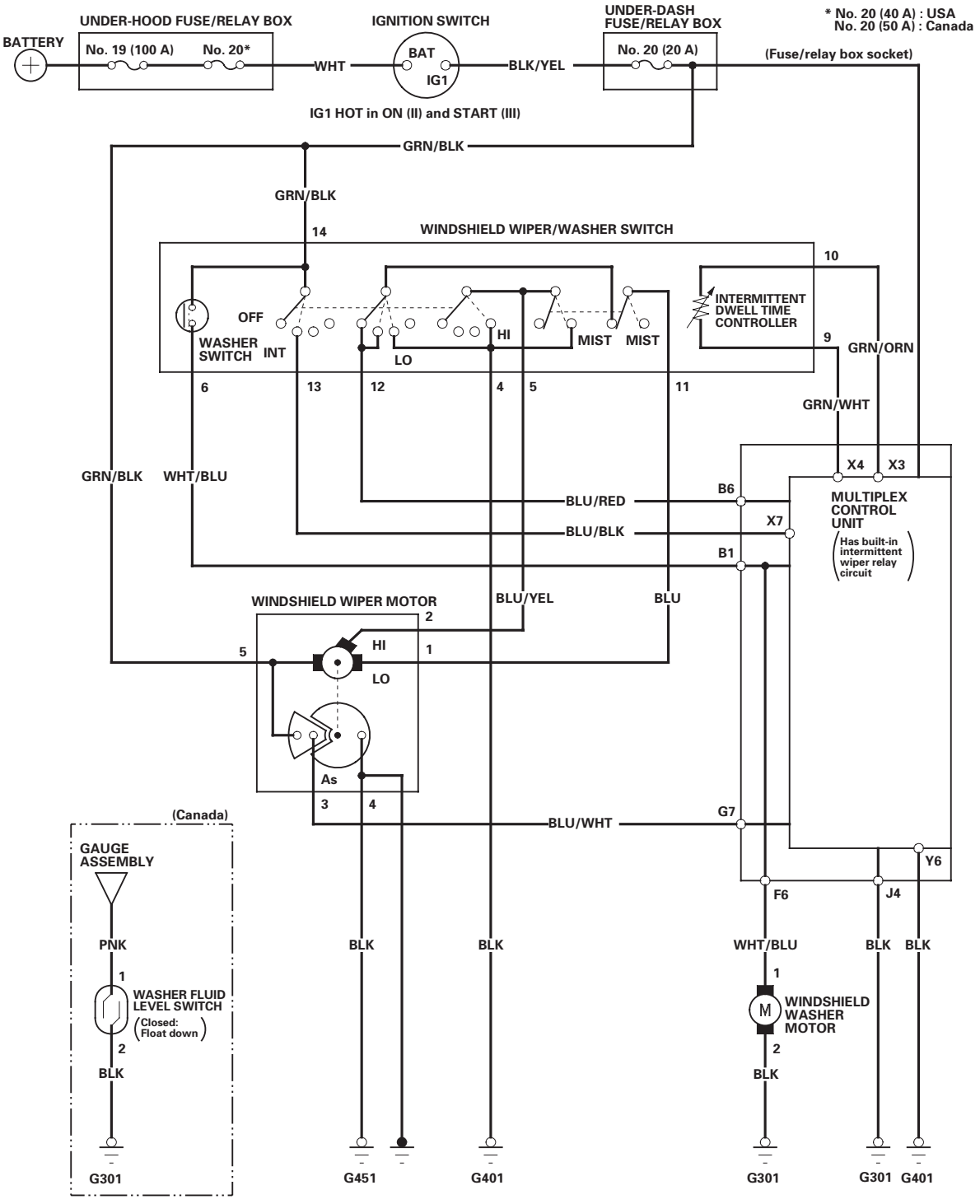

Circuit Diagram - Rear Window

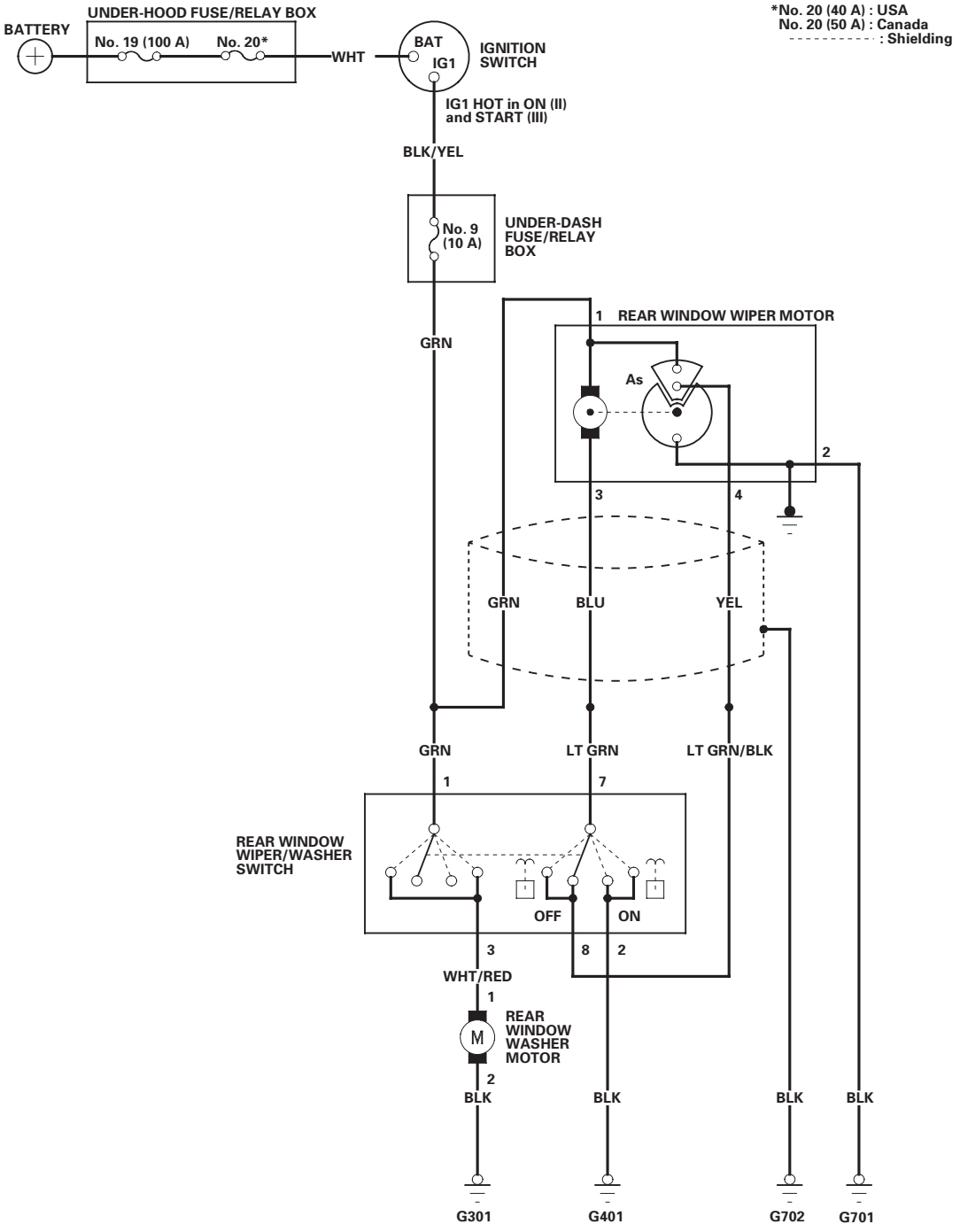

Wiper/Washer Switch Test/Replacement

1. Remove the dashboard lower cover (see page 20-63).
2. Remove the steering column covers (see page 17-25).
3. Disconnect the 14P connector (A) from the wiper/washer switch (B).

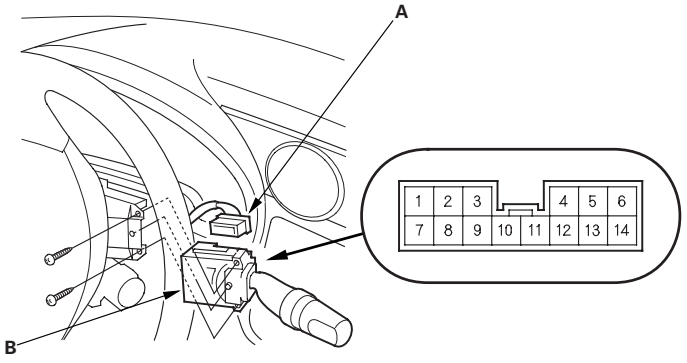

4. Remove the two screws, then pull out the wiper/washer switch.
5. Inspect the connector terminals to be sure they are all making good contact.
   - If the terminals are bent, loose or corroded, repair them as necessary, and recheck the system.
   - If the terminals look OK, check for continuity between the terminals in each switch position according to the tables.

Windshield:

Position \ Terminal	4	5	6	11	12	13	14	9		10
OFF				○	○					
INT				○	○	○	○			
LO	○			○						
HI	○	○								
Mist switch ON	○	○								
Washer switch ON			○				○			
Intermittent dwell time controller turned								○	0—30 kΩ	○

Rear Window:

Position \ Terminal	1	2	3	7	8
Washer switch ON and wiper switch OFF	○		○	○	○
OFF				○	○
ON		○		○	
Wiper and washer switch ON	○	○	○	○	

6. If the continuity is not as specified, replace the switch.

Control Unit Input Test

1. Before testing, troubleshoot the multiplex control system (see page 22-189).

2. Remove the driver's dashboard lower cover (see page 20-63).

3. Disconnect the under-dash fuse/relay box connectors B, F, G, J, X and Y.

   NOTE: All connectors are wire side of female terminals.

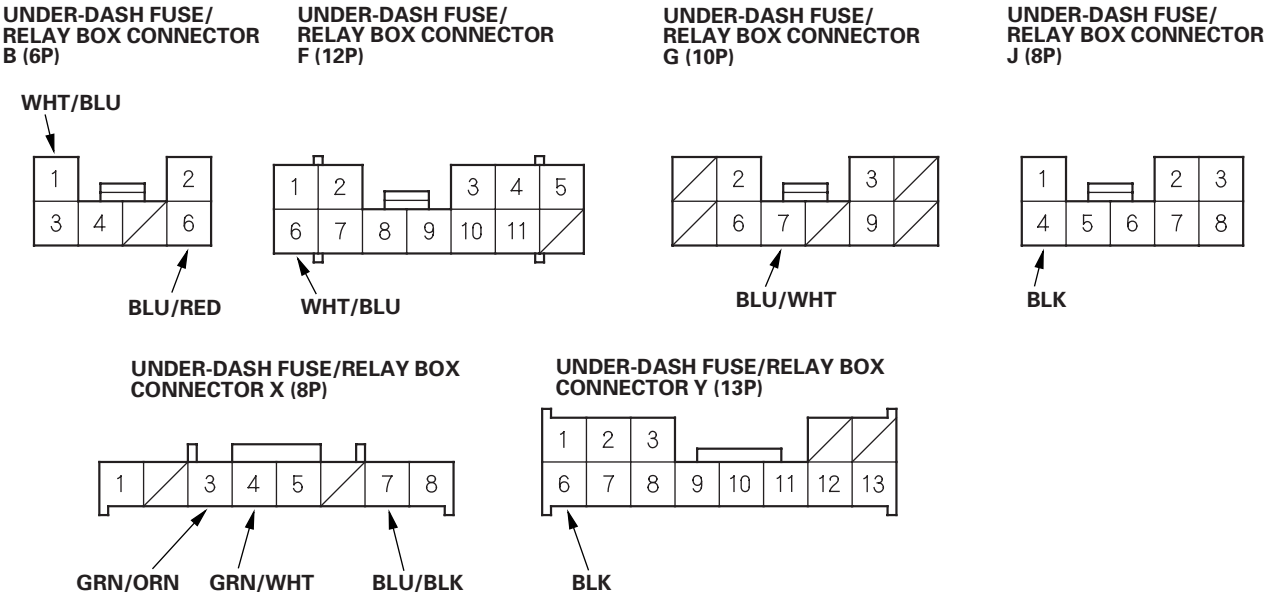

4. Inspect the connector and socket terminals to be sure they are all making good contact.

   - If the terminals are bent, loose or corroded, repair them as necessary, and recheck the system.
   - If the terminals are OK, go to step 5.

5. Reconnect the connectors, and make these input tests at the connector.

   - If any test indicates a problem, find and correct the cause, then recheck the system.
   - If all the input tests prove OK, go to step 6.

Cavity	Wire	Test condition	Test: Desired result	Possible cause if result is not obtained
J4	BLK	Under all conditions	Check for voltage to ground: There should be 1 V or less.	• Poor ground (G301) • An open in the wire
Y6	BLK	Under all conditions	Check for voltage to ground: There should be 1 V or less.	• Poor ground (G401) • An open in the wire
B1 . F6	WHT/BLU	Ignition switch ON (II) and washer switch ON	Check for voltage to ground: There should be battery voltage. Check windshield washer motor operation: The washer motor should run.	• Poor ground (G301) • Blown No. 20 (20 A) fuse in the under-dash fuse/relay box • Faulty wiper/washer switch • Faulty windshield washer motor • An open in the wire
B6	BLU/RED	Ignition switch ON (II), wiper switch in OFF or INT, jump B6 to ground	Check for voltage to ground: There should be battery voltage. Check wiper motor operation: The wiper motor should run at low speed.	• Blown No. 20 (20 A) fuse in the under-dash fuse/relay box • Faulty wiper/washer switch • Faulty windshield wiper motor • An open in the wire
G7	BLU/WHT	Ignition switch ON (II) and wipers in park position	Check for voltage to ground: There should be battery voltage.	• Blown No. 20 (20 A) fuse in the under-dash fuse/relay box • Faulty windshield wiper motor • An open in the wire
X7	BLU/BLK	Ignition switch ON (II) and wiper switch in INT	Check for voltage to ground: There should be battery voltage.	• Blown No. 20 (20 A) fuse in the under-dash fuse/relay box • Faulty wiper/washer switch • An open in the wire

6. Disconnect the X connector from the under-dash fuse/relay box, and make this input test at the connector. If this input test proves OK, the multiplex control unit must be faulty; replace the under-dash fuse/relay box assembly.

X3 X4	GRN/ORN GRN/WHT	Intermittent dwell time control ring turned	Check for resistance between the terminals: It should vary from 0 to 30 kΩ as the ring is turned.	• Faulty intermittent dwell time controller • An open in the wire

Wiper Motor Test

Windshield

1. Remove the wiper arms, hood seals, and cowl covers (see page 22-158).

2. Disconnect the 5P connector (A) from the wiper motor (B).

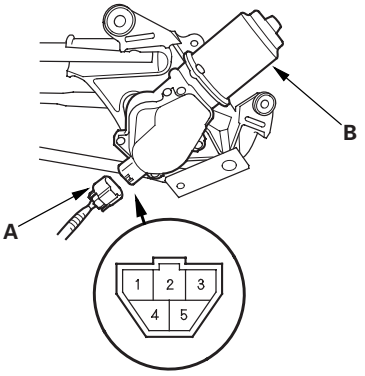

3. Test the motor by connecting battery power to the No. 5 terminal and ground the No. 1 terminal of the wiper motor 5P connector. The motor should run. If the motor does not run or fails to run smoothly, replace the motor.

4. Connect an analog voltmeter between the No. 3 (+) and No. 4 (−) terminals, and run the motor at low or high speed. The voltmeter should indicate 12 V and 4 V or less alternately. If it does not, replace the windshield wiper motor.

Rear Window

1. Open the hatch, and remove the hatch trim panel (see page 20-54).

2. Disconnect the 4P connector (A) from the wiper motor (B).

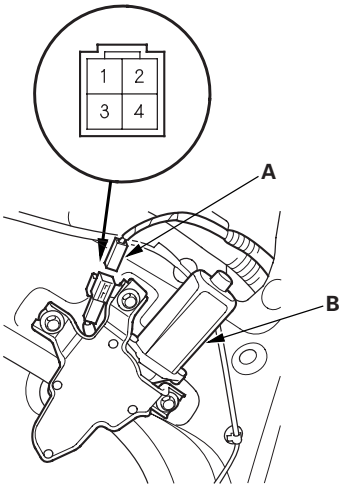

3. Test the motor by connecting battery power to the No. 1 terminal and ground the No. 3 terminal of the wiper motor. The motor should run. If the motor does not run or fails to run smoothly, replace the motor.

4. Connect an analog voltmeter between the No. 4 (+) and No. 2 (−) terminals, and run the motor.
The voltmeter should indicate 12 V and 4 V or less alternately. If it does not, replace the rear window wiper motor.

Washer Motor Test

1. Remove the left inner fender (see page 20-111).

2. Disconnect the 2P connectors (A) from the washer motors (B).

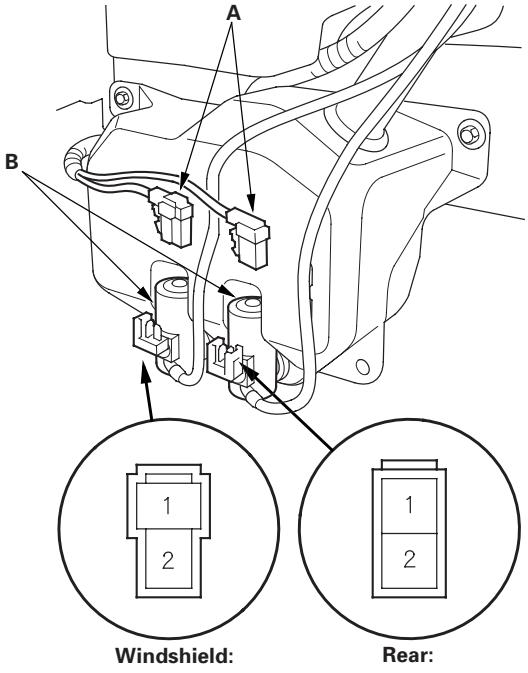

3. Test the motor by connecting battery power to the No. 1 terminal and ground the No. 2 terminal of the washer motor. The motor should run.

   - If the motor does not run or fails to run smoothly, replace it.
   - If the motor runs smoothly, but little or no washer fluid is pumped, check for a disconnected or blocked washer hose, or a clogged pump outlet in the motor.

Washer Fluid Level Switch Test

Canada

1. Partially remove the left inner fender (see page 20-111).

2. Disconnect the 2P connector (A) from the washer fluid level switch (B).

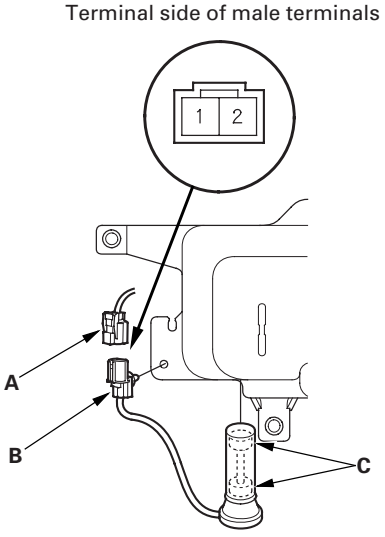

3. Remove the washer fluid level switch from the washer reservoir.

   NOTE: Fluid may flow out of the opening.

4. Check for continuity between the No. 1 and No. 2 terminals in each float position (C).

   - There should be continuity when the float is down.
   - There should be no continuity when the float is up.

5. If the continuity is not as specified, replace the switch.

Wiper Motor Replacement

Windshield Wiper Motor

1. Open the hood. Remove the nuts (A) and the windshield wiper arms (B).

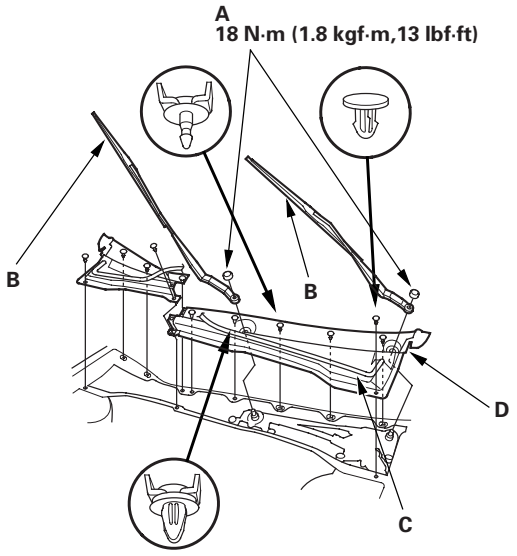

2. Remove the hood seals (C) and cowl covers (D).

3. Disconnect the 5P connector (A) from the wiper motor (B).

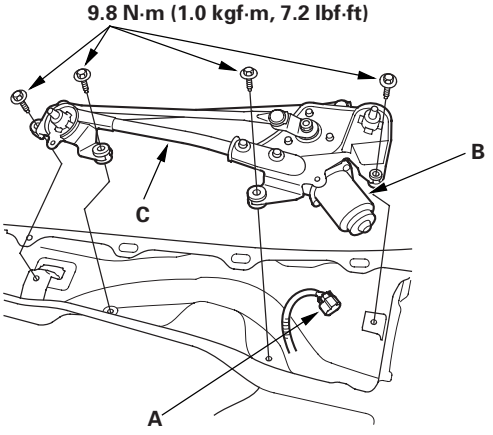

4. Remove the four bolts and wiper linkage assembly (C).

5. Scribe a line (A) across the link and windshield wiper linkage to show the original adjustment. Separate the windshield wiper linkage (B) from the wiper motor (C).

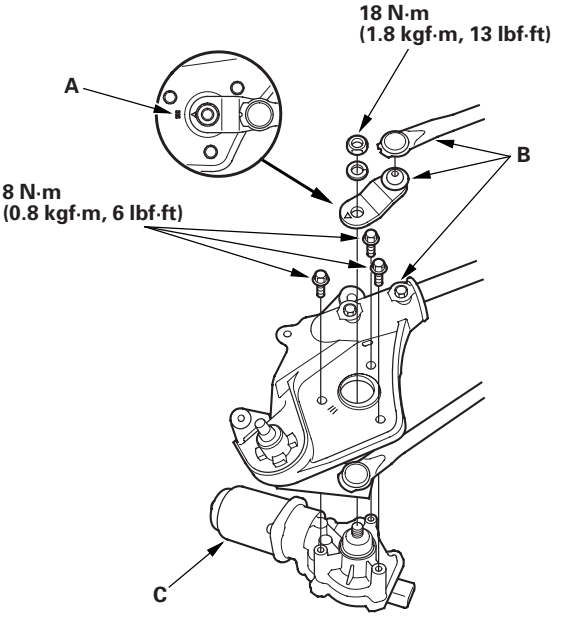

6. Install in the reverse order of removal, and note these items:

   - Apply multipurpose grease to the moving parts.
   - Before reinstalling the wiper arms, turn the wiper switch ON, then OFF to return the wiper shafts to the park position.
   - If necessary, replace any damaged clips.
   - Check the wiper motor operation.

Rear Window Wiper Motor

1. Open the hatch, and remove the hatch trim panel (see page 20-54).

2. Remove the mounting nut (A), wiper arm (B), and special nut (C).

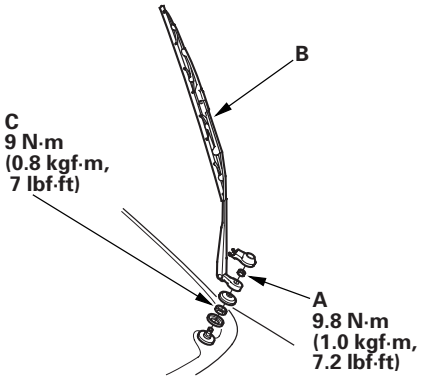

3. Disconnect the 4P connector (A) from the wiper motor (B).

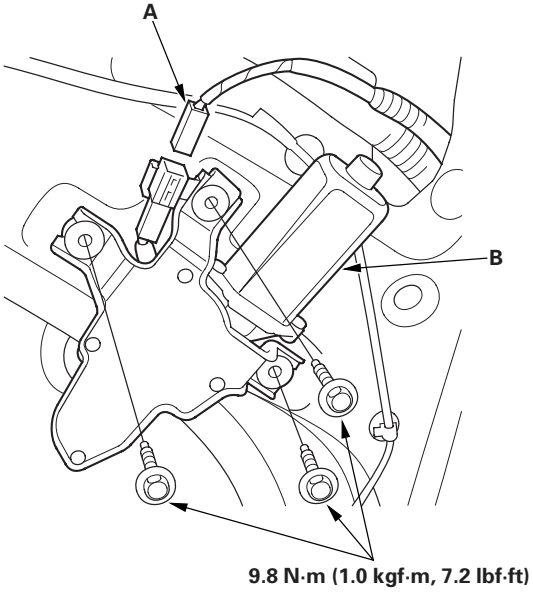

4. Remove the three bolts and wiper motor.

5. Install in the reverse order of removal.
   Check the wiper motor operation.

Washer Reservoir Replacement

1. Remove the left inner fender (see page 20-111).

2. Disconnect the 2P connector(s) (A) and washer tube (B).

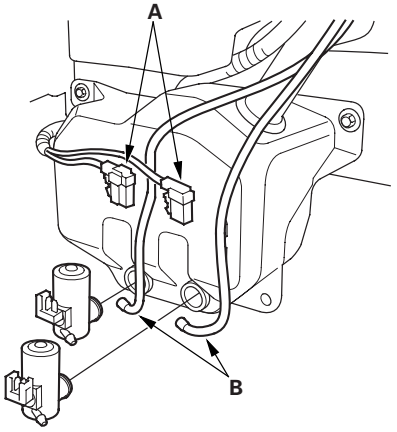

3. Remove the four bolts and washer reservoir (A).

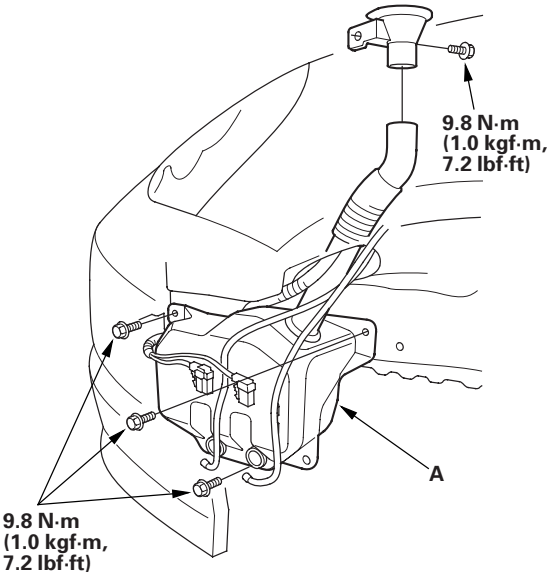

4. Install the reservoir in the reverse order of removal.
   Check the washer motor operation.

Washer Tube Replacement

1. Remove the left inner fender (see page 20-111).
2. Remove the headliner (see page 20-55).
3. Remove the washer nozzles and clips, then remove the tubes.

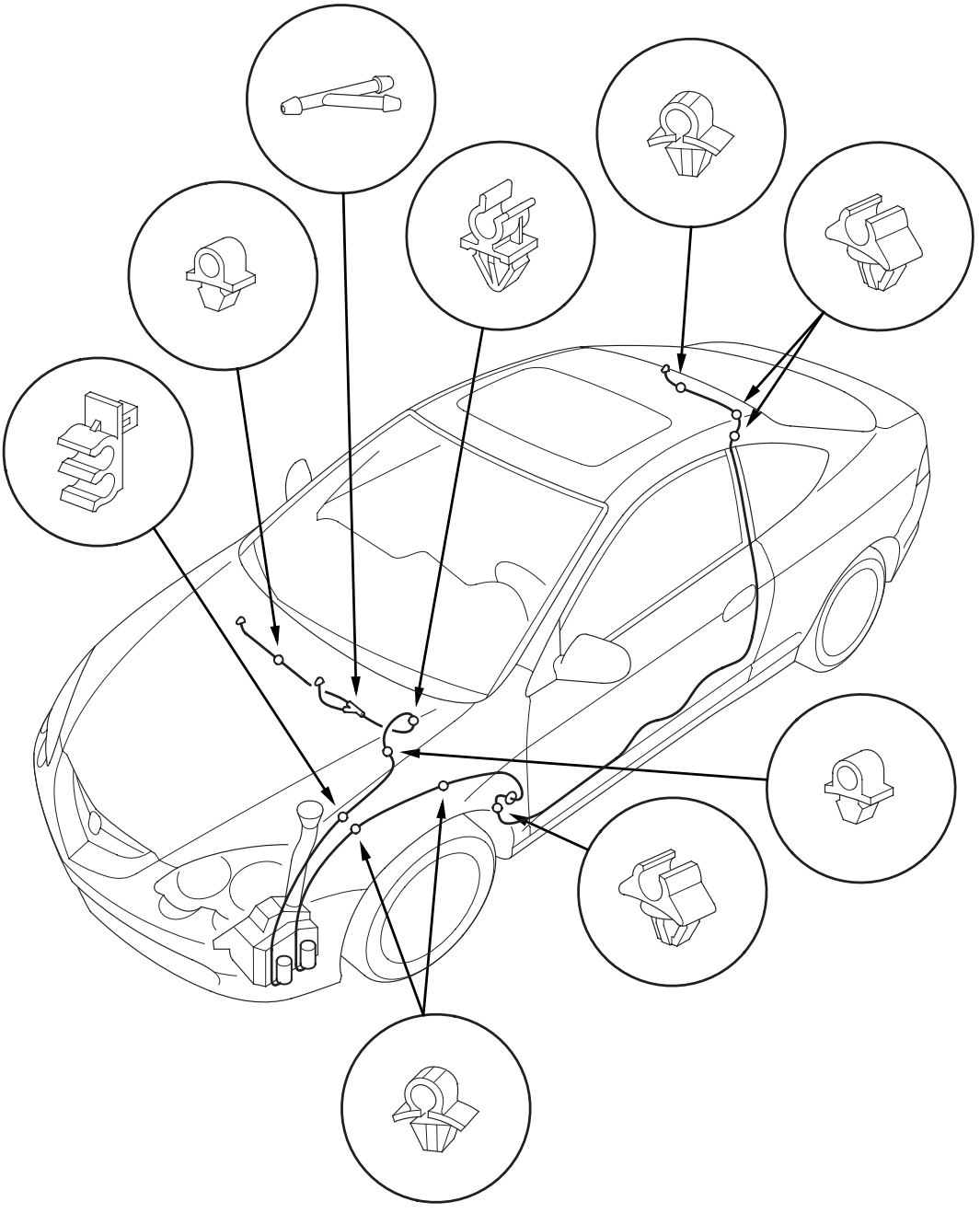

4. Install in the reverse order of removal. Take care not to pinch the washer tubes. Check the washer operation.

Accessory Power Sockets

Circuit Diagram

USA

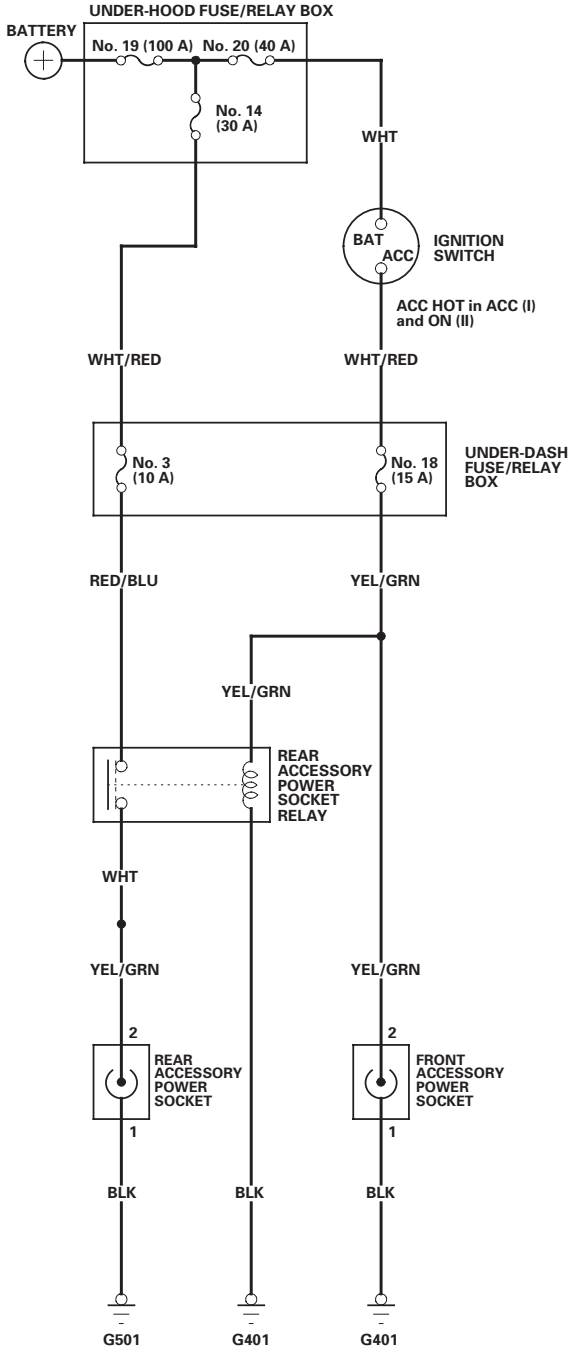

Canada

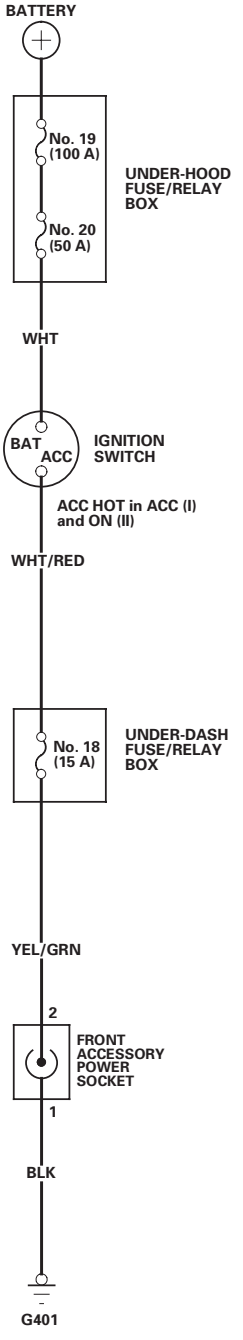

Accessory Power Socket Test/Replacement

Front

1. Remove the dashboard center lower cover (see page 20-65).

2. Disconnect the 2P connector (A) from the socket (B).

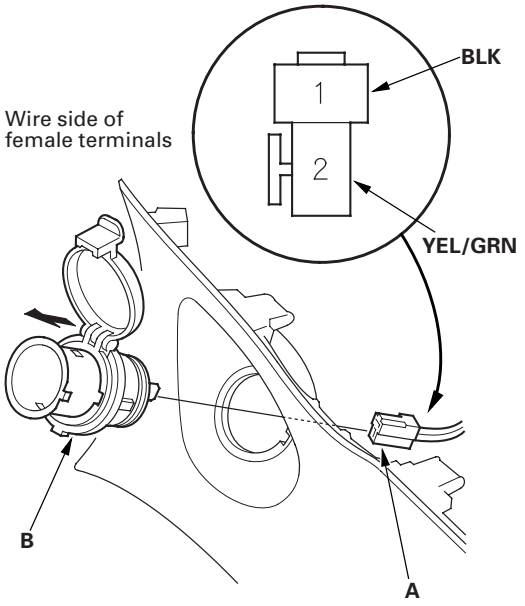

3. Carefully pry the accessory power socket out from the dashboard.

4. Inspect the connector terminals to be sure they are all making good contact.

   - If the terminals are bent, loose or corroded, repair them as necessary, and recheck the system.
   - If the terminals look OK, go to step 5.

5. Turn the ignition switch ACC (I), and check for voltage between the No. 1 and No. 2 terminals.

   - There should be battery voltage.
   - If there is no battery voltage, check for:
     – Poor ground (G 401).
     – An open in the wire.
     – Blown No. 18 (15 A) fuse in the under-dash fuse/relay box.

Rear

1. Remove the rear console cover (see page 20-62).

2. Disconnect the 2P connector (A) from the socket (B).

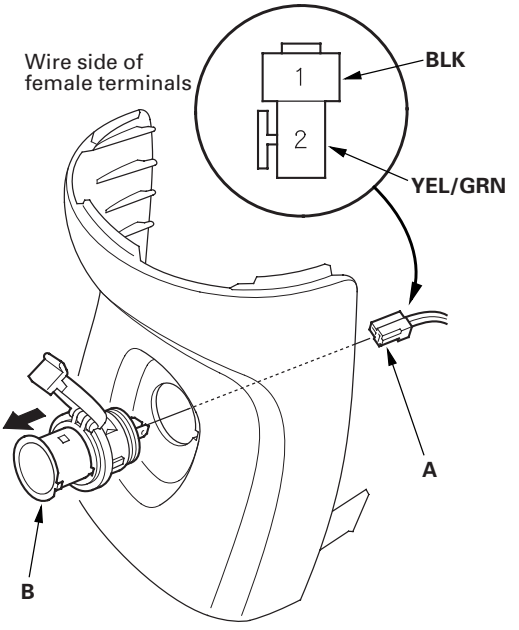

3. Carefully pry the accessory power socket out from the rear console cover.

4. Inspect the connector terminals to be sure they are all making good contact.

   - If the terminals are bent, loose or corroded, repair them as necessary, and recheck the system.
   - If the terminals look OK, go to step 5.

5. Turn the ignition switch ACC (I), and check for voltage between the No. 1 and No. 2 terminals.

   - There should be battery voltage.
   - If there is no battery voltage, check for:
     – Poor ground (G 401, G501).
     – An open in the wire.
     – Blown No. 18 (15 A) fuse in the under-dash fuse/relay box.
     – Blown No. 3 (10 A) fuse in the under-dash fuse/relay box.
     – Faulty rear accessory power socket relay.

Component Location Index

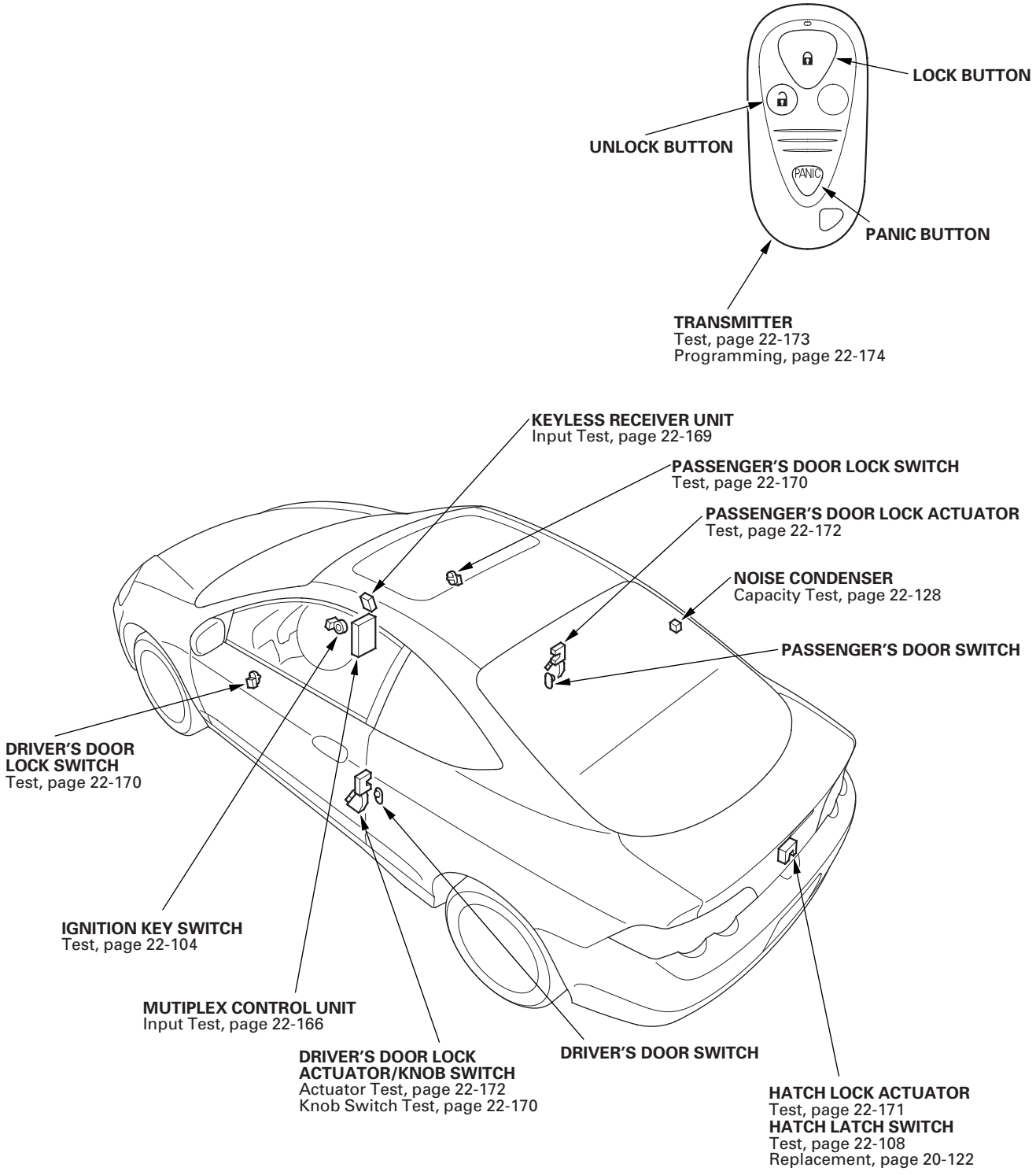

Circuit Diagram

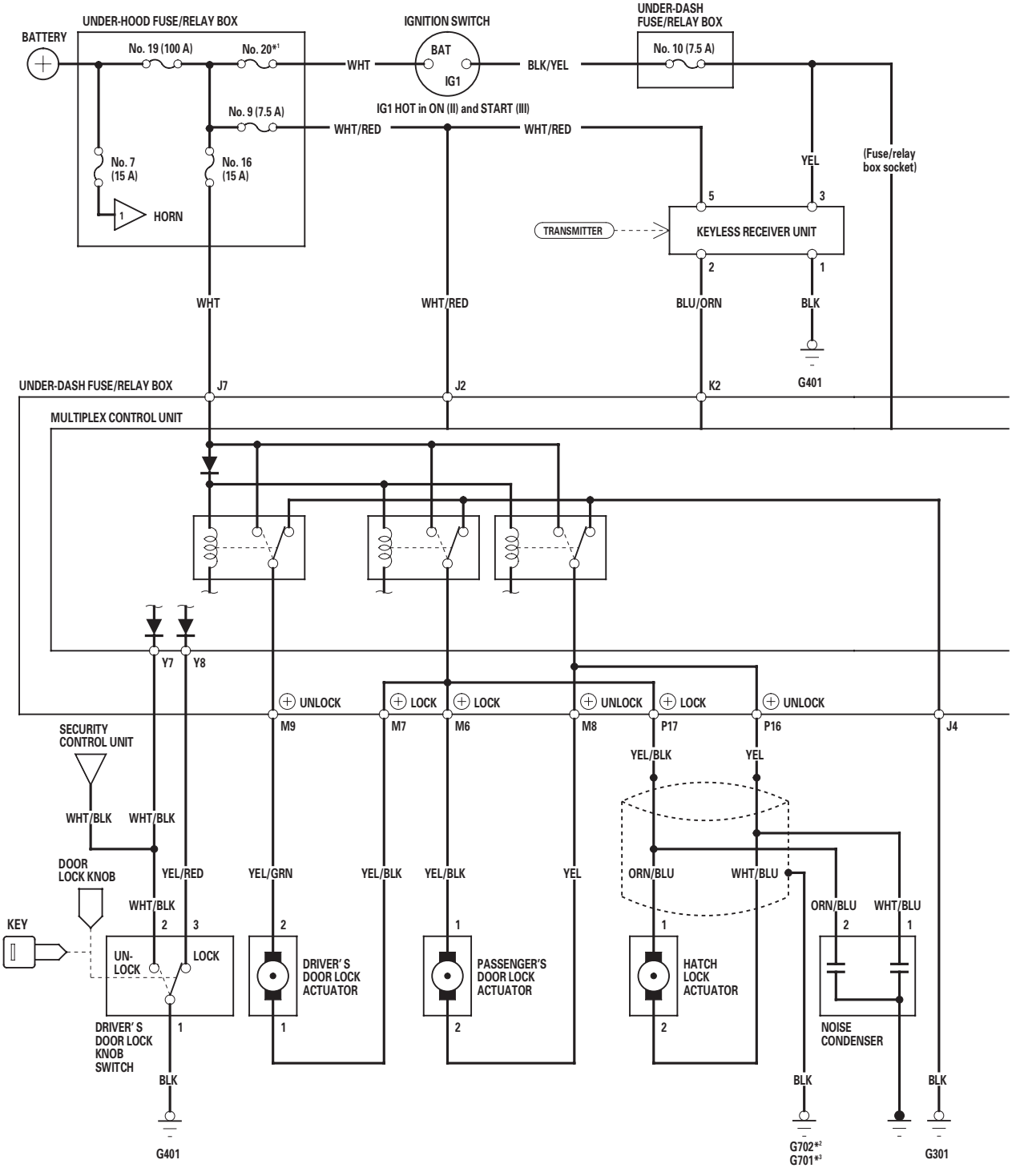

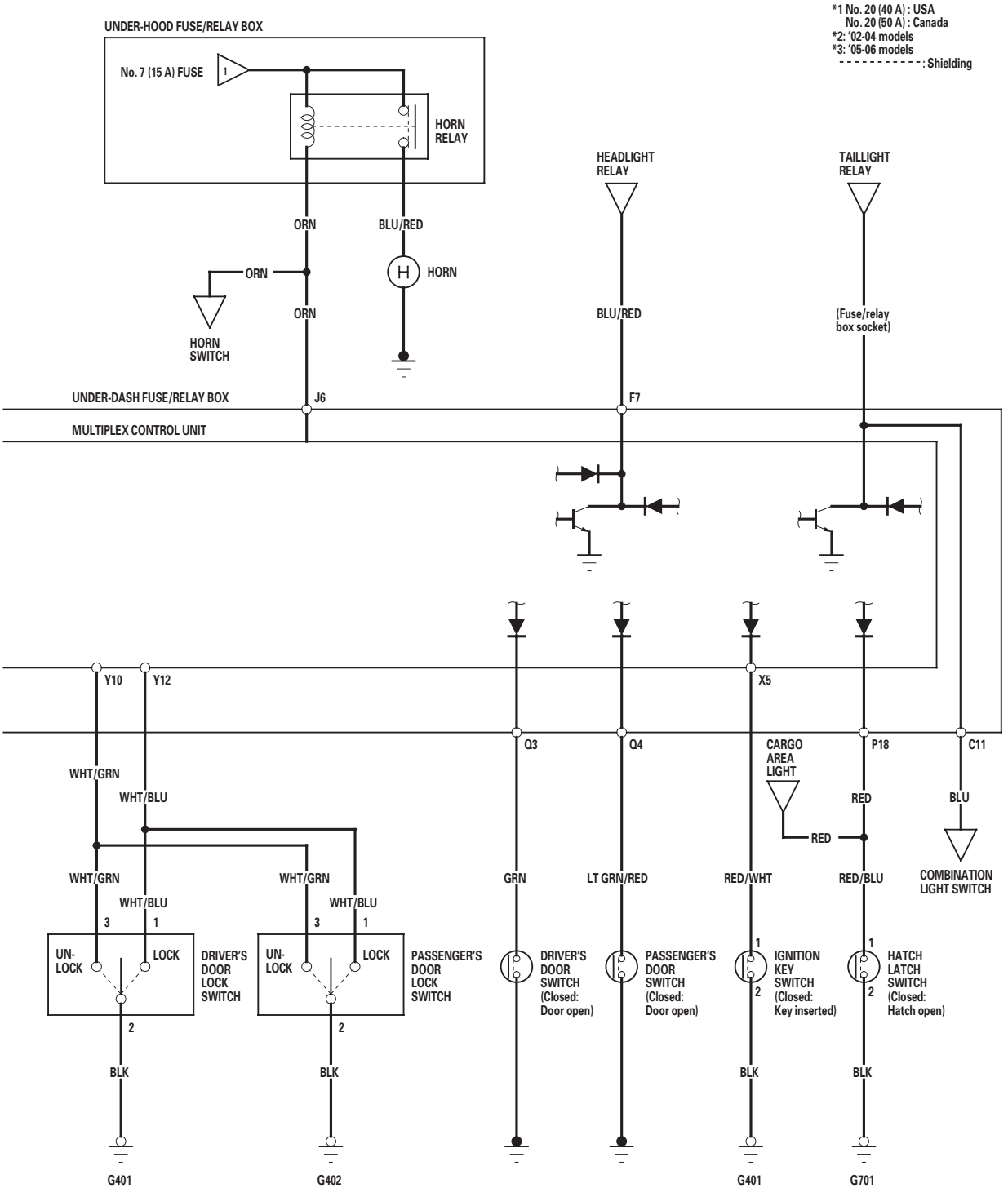
*1 No. 20 (40 A) : USA
No. 20 (50 A) : Canada
*2: '02-04 models
*3: '05-06 models
: Shielding
UNDER-HOOD FUSE/RELAY BOX
No. 7 (15 A) FUSE
1
HORN RELAY
HEADLIGHT RELAY
TAILLIGHT RELAY
ORN
BLU/RED
ORN
HORN
ORN
HORN SWITCH
BLU/RED
(Fuse/relay box socket)
UNDER-DASH FUSE/RELAY BOX
J6
F7
MULTIPLEX CONTROL UNIT
Y10
Y12
X5
Q3
Q4
CARGO AREA LIGHT
P18
C11
WHT/GRN
WHT/BLU
RED
BLU
RED
WHT/GRN
WHT/BLU
WHT/GRN
WHT/BLU
GRN
LT GRN/RED
RED/WHT
RED/BLU
COMBINATION LIGHT SWITCH
3
1
3
1
UN-LOCK
LOCK
DRIVER'S DOOR LOCK SWITCH
UN-LOCK
LOCK
PASSENGER'S DOOR LOCK SWITCH
DRIVER'S DOOR SWITCH (Closed: Door open)
PASSENGER'S DOOR SWITCH (Closed: Door open)
IGNITION KEY SWITCH (Closed: Key inserted)
HATCH LATCH SWITCH (Closed: Hatch open)
2
2
BLK
BLK
BLK
BLK
G401
G402
G401
G701

Control Unit Input Test

1. Before testing, troubleshoot the multiplex control system (see page 22-189).
2. Remove the driver's dashboard lower cover (see page 20-63).
3. Disconnect the under-dash fuse/relay box connectors.

   NOTE: All connectors are wire side of female terminals.

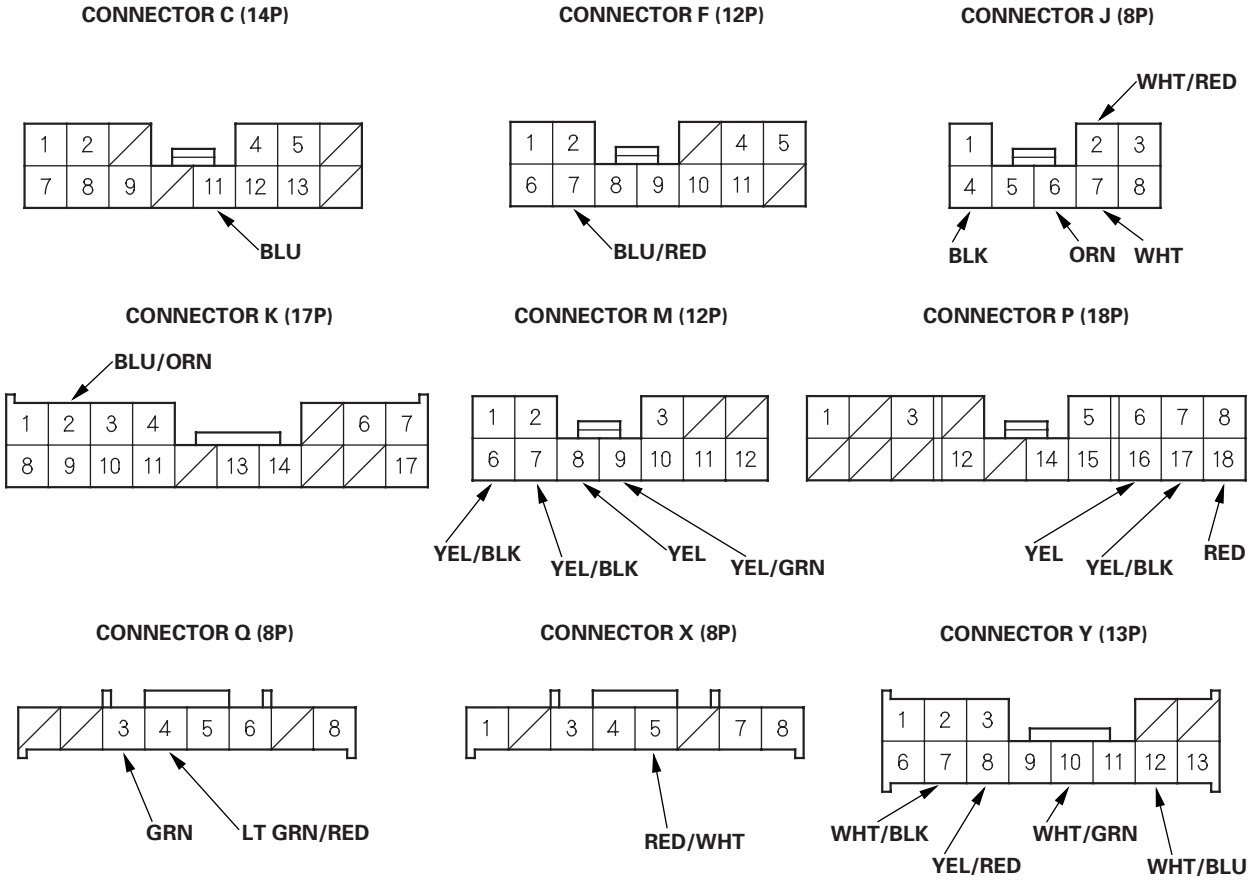

4. Inspect the connector and socket terminals to be sure they are all making good contact.
   - If the terminals are bent, loose or corroded, repair them as necessary, and recheck the system.
   - If the terminals are OK, go to step 5.

5. With the connector still disconnected, make these input tests at the connector.

- If any test indicates a problem, find and correct the cause, then recheck the system.
- If all the input tests prove OK, go to step 6.

Cavity	Wire	Test condition	Test: Desired result	Possible cause if result is not obtained
J4	BLK	Under all conditions	Check for continuity to ground: There should be continuity.	• Poor ground (G301) • An open in the wire
J2	WHT/RED	Under all conditions	Check for voltage to ground: There should be battery voltage.	• Blown No. 9 (7.5 A) fuse in the under-hood fuse/relay box • An open in the wire
J7	WHT	Under all conditions	Check for voltage to ground: There should be battery voltage.	• Blown No. 16 (15 A) fuse in the under-hood fuse/relay box • An open in the wire
F7	BLU/RED	Under all conditions	Attach to ground: The headlights should come on.	• Blown No. 15 or 17 (20 A) fuse in the under-hood fuse/relay box • Faulty headlight relay 1 or 2 • An open in the wire
J6	ORN	Under all conditions	Attach to ground: The horn should sound.	• Faulty horn relay • Faulty horn • An open in the wire
K2	BLU/ORN	Under all conditions	Check for continuity between the K2 terminal and keyless receiver unit 5P connector No. 2 terminal with the 5P connector disconnected: There should be continuity.	An open in the wire
M7 M9	YEL/BLK YEL/GRN	Connect J7 terminal to M7 (M9) terminal, and M9 (M7) terminal to J4 terminal	Check actuator operation: The driver's door lock actuator should lock (unlock).	• Blown No. 16 (15 A) fuse in the under-hood fuse/relay box • Faulty driver's door lock actuator • An open in the wire
M6 M8	YEL/BLK YEL	Connect J7 terminal to M6 (M8) terminal, and M8 (M6) terminal to J4 terminal	Check actuator operation: The passenger's door lock actuator should lock (unlock).	• Blown No. 16 (15 A) fuse in the under-hood fuse/relay box • Faulty passenger's door lock actuator • An open in the wire
P16 P17	YEL YEL/BLK	Connect J7 terminal to P17 (P16) terminal, and P16 (P17) terminal to J4 terminal	Check actuator operation: The hatch lock actuator should lock (unlock).	• Blown No. 16 (15 A) fuse in the under-hood fuse/relay box • Faulty hatch lock actuator • An open in the wire

(cont'd)

Control Unit Input Test (cont'd)

6. Reconnect all connectors to the under-dash fuse/relay box, and make these input tests at the appropriate connectors on the under-dash fuse/relay box.

- If any test indicates a problem, find and correct the cause, then recheck the system.
- If all the input tests prove OK, the multiplex control unit must be faulty, replace the under-dash fuse/relay box assembly.

Cavity	Wire	Test condition	Test: Desired result	Possible cause if result is not obtained
C11	BLU	Under all conditions	Attach to ground: The parking side marker, license plate lights, and taillights should come on.	• Blown No. 2 (15 A) fuse in the under-hood fuse/relay box • Faulty taillight relay • Faulty under-dash fuse/relay box • An open in the wire
Q3	GRN	Driver's door open	Check for voltage to ground: There should be 1 V or less.	• Faulty driver's door switch • An open in the wire
		Driver's door closed	Check for voltage to ground: There should be 5 V or more.	• Faulty driver's door switch • Short to ground
Q4	LT GRN/RED	Passenger's door open	Check for voltage to ground: There should be 1 V or less.	• Faulty passenger's door switch • An open in the wire
		Passenger's door closed	Check for voltage to ground: There should be 5 V or more.	• Faulty passenger's door switch • Short to ground
P18	RED	Hatch open	Check for voltage to ground: There should be 1 V or less.	• Faulty hatch latch switch • An open in the wire
		Hatch closed	Check for voltage to ground: There should be 5 V or more.	• Faulty hatch latch switch • Short to ground
X5	RED/WHT	Ignition key inserted into the ignition switch	Check for voltage to ground: There should be 1 V or less.	• Poor ground (G401) • Faulty ignition key switch • An open in the wire
		Ignition key removed from the ignition switch	Check for voltage to ground: There should be 5 V or more.	• Faulty ignition key switch • Short to ground
Y7	WHT/BLK	Driver's door lock knob switch in UNLOCKED position	Check for voltage to ground: There should be 1 V or less.	• Poor ground (G401) • Faulty driver's door lock knob switch • An open in the wire
		Driver's door lock knob switch in LOCKED position	Check for voltage to ground: There should be 5 V or more.	• Faulty driver's door lock knob switch • Short to ground
Y8	YEL/RED	Driver's door lock knob switch in LOCKED position	Check for voltage to ground: There should be 1 V or less.	• Poor ground (G401) • Faulty driver's door lock knob switch • An open in the wire
		Driver's door lock knob switch in UNLOCKED position	Check for voltage to ground: There should be 5 V or more.	• Faulty driver's door lock knob switch • Short to ground
Y10	WHT/GRN	Driver's or passenger's door lock switch in UNLOCKED position	Check for voltage to ground: There should be 1 V or less.	• Poor ground (G401, G402) • Faulty driver's or passenger's door lock switch • An open in the wire
		Driver's or passenger's door lock switch in neutral or LOCKED position	Check for voltage to ground: There should be 5 V or more.	• Faulty driver's or passenger's door lock switch • Short to ground
Y12	WHT/BLU	Driver's or passenger's door lock switch in LOCKED position	Check for voltage to ground: There should be 1 V or less.	• Poor ground (G401, G402) • Faulty driver's or passenger's door lock switch • An open in the wire
		Driver's or passenger's door lock switch in neutral or UNLOCKED position	Check for voltage to ground: There should be 5 V or more.	• Faulty driver's or passenger's door lock switch • Short to ground

Keyless Receiver Unit Input Test

1. Remove the audio unit (see page 22-118).
2. Disconnect the 5P connector (A) from the keyless receiver unit (B).

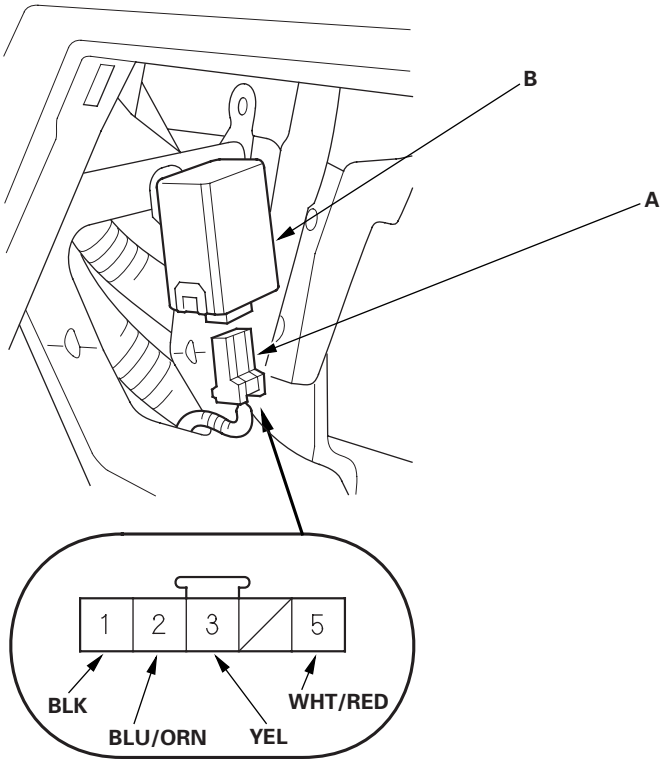

Wire side of female terminals

3. Inspect the connector and socket terminals to be sure they are all making good contact.
   - If the terminals are bent, loose or corroded, repair them as necessary, and recheck the system.
   - If the terminals are OK, go to step 4.
4. With the connector still disconnected, make these input tests at the connector.
   - If any test indicates a problem, find and correct the cause, then recheck the system.
   - If all the input tests prove OK, replace the keyless receiver unit.

Cavity	Wire	Test condition	Test: Desired result	Possible cause if result is not obtained
1	BLK	Under all conditions	Check for continuity to ground: There should be continuity.	• Poor ground (G401) • An open in the wire
3	YEL	Ignition switch ON (II)	Check for voltage to ground: There should be battery voltage.	• Blown No. 10 (7.5 A) fuse in the under-dash fuse/relay box • An open in the wire
5	WHT/RED	Under all conditions	Check for voltage to ground: There should be battery voltage.	• Blown No. 9 (7.5 A) fuse in the under-hood fuse/relay box • An open in the wire
2	BLU/ORN	Under all conditions	Check for continuity between the No. 2 terminal and the No. 2 terminal of the under-dash fuse/relay box connector K (17P): There should be continuity.	An open in the wire

Transmitter Test

NOTE:
- If the doors unlock or lock with the transmitter, but the LED on the transmitter does not come on, the LED is faulty; replace the transmitter.
- If any door or the hatch is open, you cannot lock the doors with the transmitter.
- If you unlocked the doors with the transmitter, but do not open any of the doors within 30 seconds, the doors relock automatically.
- The doors do not lock or unlock with the transmitter if the ignition key is inserted in the ignition switch.

1. Open the transmitter and check for water damage.

   - If you find any water damage, replace the transmitter.
   - If there is no water damage, go to step 3.

2. Replace the transmitter battery (A) with a new one, and try to lock and unlock the doors with the transmitter.

   - If the doors lock and unlock, the transmitter is OK.
   - If the doors don't lock and unlock, go to step 3.

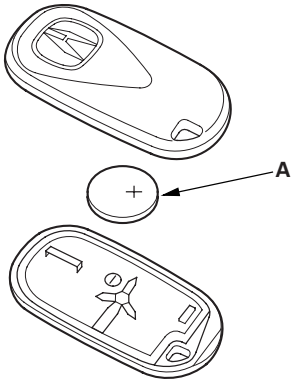

3. Reprogram the transmitter, then try to lock and unlock the doors.

   - If the doors lock and unlock, the transmitter is OK.
   - If the doors don't lock and unlock, replace the transmitter.

Door Lock Knob Switch Test

1. Remove the driver's door panel (see page 20-5).

2. Disconnect the 3P connector from the actuator.

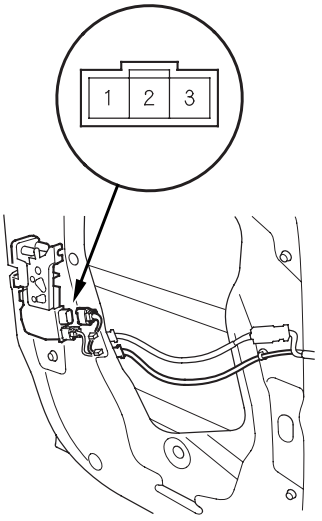

3. Check for continuity between the No. 1 and No. 3 terminals:

   - There should be continuity when the door lock knob switch is in the LOCKED position.
   - There should be no continuity when the door lock knob switch is in the UNLOCKED position.

4. Check for continuity between the No. 1 and No. 2 terminals:

   - There should be continuity when the door lock knob switch is in the UNLOCKED position.
   - There should be no continuity when the door lock knob switch is in the LOCKED position.

5. If the continuity is not as specified, replace the driver's door lock actuator.

Door Lock Switch Test

1. Remove the door panel (see page 20-5).

2. Remove the two mounting screws and the door lock switch.

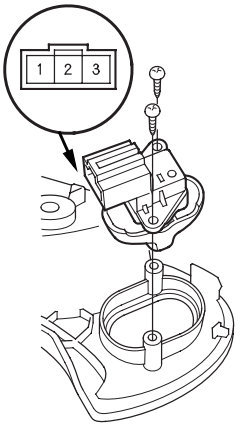

3. Check for continuity between the No. 1 and No. 2 terminals:

   - There should be continuity when the door lock switch is in the LOCKED position.
   - There should be no continuity when the door lock switch is in the UNLOCKED position.

4. Check for continuity between the No. 2 and No. 3 terminals:

   - There should be continuity when the door lock switch is in the UNLOCKED position.
   - There should be no continuity when the door lock switch is in the LOCKED position.

5. If the continuity is not as specified, replace the door lock switch.

Hatch Lock Actuator Test

1. Remove the hatch trim panel (see page 20-54).

2. Disconnect the 2P connector (A) from the actuator (B).

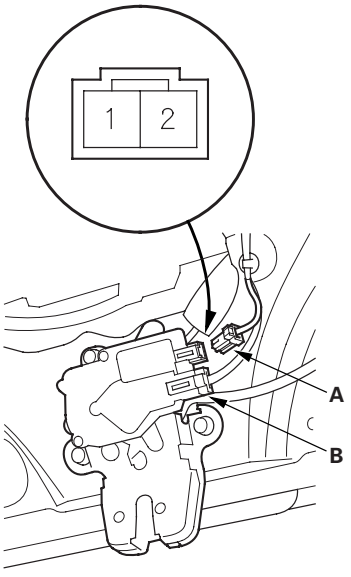

3. Check actuator operation by connecting power to the No. 2 terminal and ground the No. 1 terminal for a moment.
   The actuator should move to UNLOCK.

   NOTICE
   To prevent damage to the actuator, apply battery voltage momentarily.

4. Check actuator operation by connecting power to the No. 1 terminal and ground the No. 2 terminal for a moment.
   The actuator should move to LOCK.

   NOTICE
   To prevent damage to the actuator, apply battery voltage momentarily.

5. If the actuator does not work as specified, replace it.

Door Lock Actuator Test

Driver's Door

1. Remove the driver's door panel (see page 20-5).

2. Disconnect the 2P connector (A) from the actuator (B).

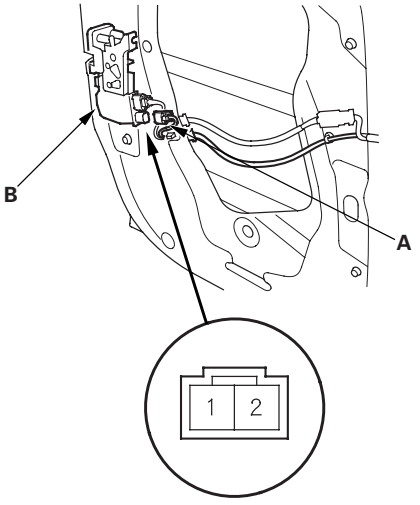

3. Check actuator operation by connecting power to the No. 1 terminal and ground the No. 2 terminal for a moment.
   The actuator should move to LOCK.

   NOTICE
   To prevent damage to the actuator, apply battery voltage momentarily.

4. Check actuator operation by connecting power to the No. 2 terminal and ground the No. 1 terminal for a moment.
   The actuator should move to UNLOCK.

   NOTICE
   To prevent damage to the actuator, apply battery voltage momentarily.

5. If the actuator does not work as specified, replace it.

Passenger's Door

1. Remove the passenger's door panel (see page 20-5).

2. Disconnect the 2P connector (A) from the actuator (B).

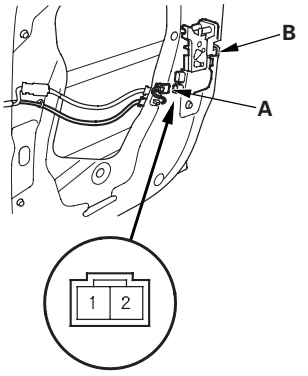

3. Check actuator operation by connecting power to the No. 1 terminal and ground the No. 2 terminal for a moment.
   The actuator should move to LOCK.

   NOTICE
   To prevent damage to the actuator, apply battery voltage momentarily.

4. Check actuator operation by connecting power to the No. 2 terminal and ground the No. 1 terminal for a moment.
   The actuator should move to UNLOCK.

   NOTICE
   To prevent damage to the actuator, apply battery voltage momentarily.

5. If the actuator does not work as specified, replace it.

Transmitter Programming

Storing transmitter codes
The codes of up to three transmitters can be stored into the keyless receiver unit memory. (If a fourth code is stored, the code which was input first will be erased.)

NOTE: It is important to maintain the time limits between the steps. Make sure the doors, the hood and the tailgate are closed.

1. Turn the ignition switch ON (II).
2. Within 1 to 4 sec., press the transmitter lock or unlock button with the transmitter aimed at the keyless receiver unit built into the power window master switch.
3. Within 1 to 4 sec., turn the ignition switch OFF.
4. Within 1 to 4 sec., turn the ignition switch ON (II).
5. Within 1 to 4 sec., press the transmitter lock or unlock button with the transmitter aimed at the keyless receiver unit built into the power window master switch.
6. Within 1 to 4 sec., turn the ignition switch OFF.
7. Within 1 to 4 sec., turn the ignition switch ON (II).
8. Within 1 to 4 sec., press the transmitter lock or unlock button with the transmitter aimed at the keyless receiver unit built into the power window master switch.
9. Within 1 to 4 sec., turn the ignition switch OFF.
10. Within 4 sec., turn the ignition switch ON (II).
11. Within 1 to 4 sec., press the transmitter lock or unlock button with the transmitter aimed at the keyless receiver unit built into the power window master switch.
12. Confirm you can hear the sound of the door lock actuators within 1 to 4 sec., then push the transmitter lock or unlock button again, or the code will not be stored.
13. Within 10 sec., aim the transmitters (up to two additional ones) whose codes you want to store in the keyless receiver, and press the transmitter lock or unlock buttons.
    Confirm that you can hear the sound of the door lock actuators after each transmitter code is stored.
14. Turn the ignition switch OFF, and remove the key.
15. Confirm proper operation with the transmitters.

    NOTE: Once the programming mode is entered, the remote button must be pressed a second time. If the button is not pressed, or if the ignition switch is turned OFF, the programming for all remotes will be cancelled.

Component Location Index

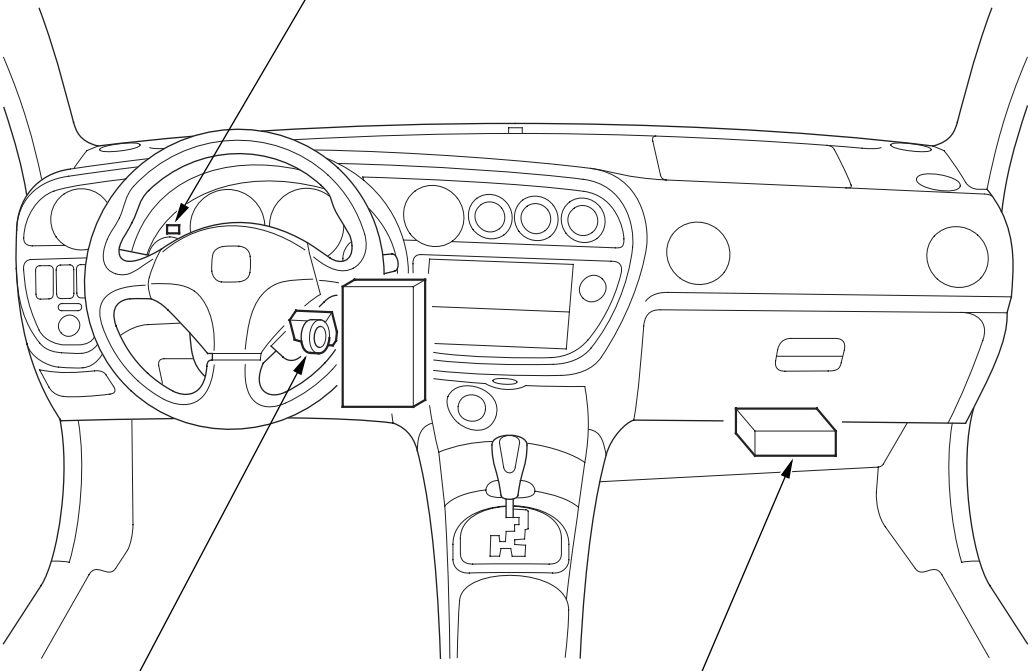

IMMOBILIZER INDICATOR
Self-diagnostic Procedure, page 22-68

IMMOBILIZER CONTROL UNIT-RECEIVER
Troubleshooting, page 22-178
Replacement, page 22-184

ECM/PCM
Replacement
• '02-04 models, page 11-284
• '05-06 models, page 11-284
Substitute known-good for testing, page 11-6

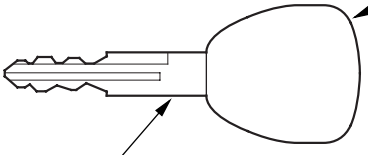

TRANSPONDER
(Built into the ignition key)

IGNITION KEY

System Description

The vehicle is equipped with an immobilizer system that will disable the vehicle unless the proper ignition key is used. This system consists of a transponder located in the ignition key, an immobilizer control unit-receiver, an indicator, and the ECM/PCM.

When the key is inserted in the ignition switch and turned to the ON (II) position, the immobilizer control unit-receiver sends power to the transponder in the ignition key. The transponder then sends a coded signal back to the immobilizer control unit-receiver which then sends a coded signal to the ECM/PCM.

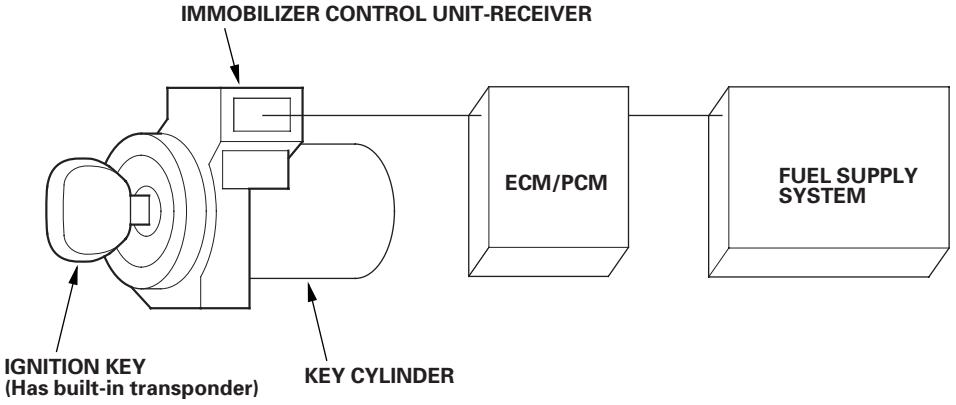

- If the proper key has been used, the immobilizer indicator will come on for about 2 seconds, then go off.
- If the wrong key has been used or the code was not received or recognized by the unit, the indicator will come on for about 2 seconds, then it will blink until the ignition switch is turned OFF.
- If the ignition switch is turned OFF, the indicator will blink for about 5 seconds to signal that the unit has reset correctly, then the indicator will go off.
- If the customer has lost his key, and cannot start the engine, contact Acura Customer Relations.

IMMOBILIZER INDICATOR BLINKING PATTERN:

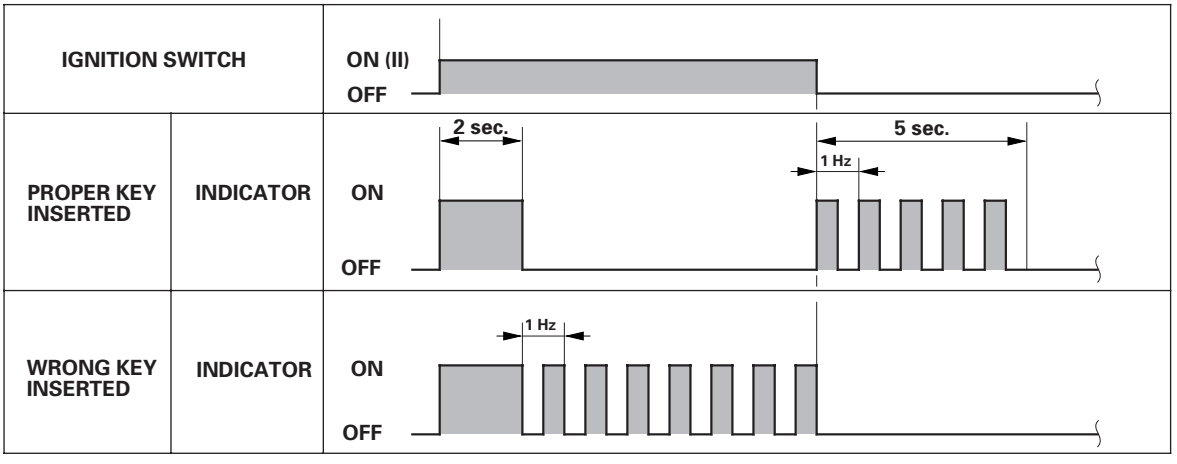

Circuit Diagram

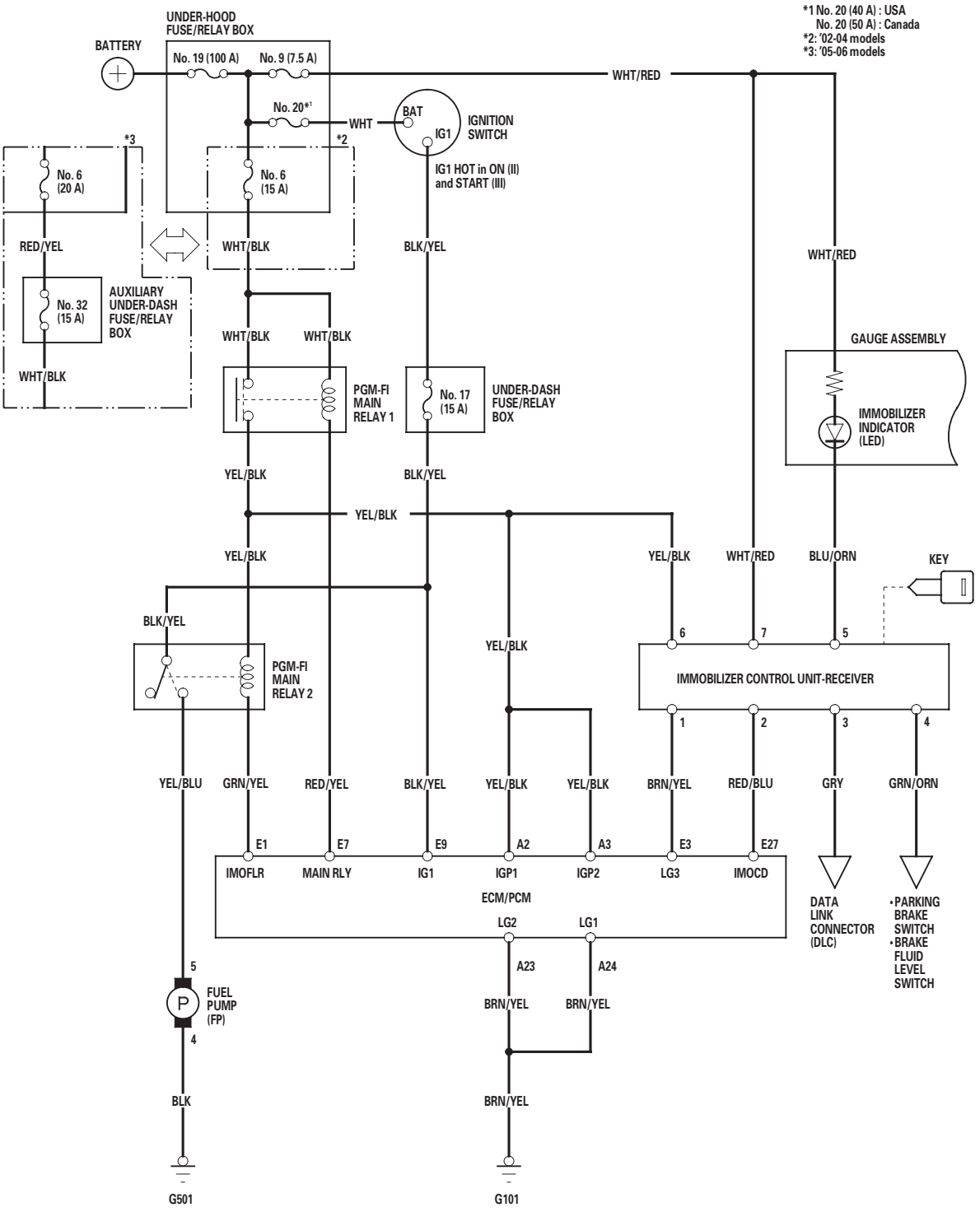

Troubleshooting

1. Turn the ignition switch ON (II) with a programmed key.

2. Check to see if the immobilizer indicator comes on.

   Does the indicator come on?

   YES—Go to step 3.

   NO—Go to step 12.

3. Check the immobilizer indicator operation.

   Does the indicator come on for 2 seconds, then go off?

   YES—Go to step 4.

   NO—Go to step 6.

4. Try to crank the engine.

   Does the starter motor operate?

   YES—Go to step 5.

   NO—Check the starter motor.■

5. Try to start the engine.

   Does the engine start?

   YES—If available, check the Status Log in the Immobilizer info with the HDS (see page 22-183). If the Status Log is not available, the Immobilizer system is OK at this time.■

   NO—Go to step 29.

6. Check to see if the immobilizer indicator comes on and blinks.

   Does the indicator blink?

   YES—Go to step 24.

   NO—Go to step 7.

7. Disconnect the 7P connector from the immobilizer control unit-receiver.

8. Check to see if the immobilizer indicator goes off.

   Does the indicator go off?

   YES—Substitute a known-good immobilizer control unit-receiver and/or ECM/PCM.■

   NO—Go to step 9.

9. Turn the ignition switch OFF.

10. Remove the gauge assembly and disconnect its 22P (20P*) connector (see page 22-74)
    *: '05-06 models

11. Check for continuity between the immobilizer control unit-receiver 7P connector No. 5 (IMOARM) terminal and body ground.

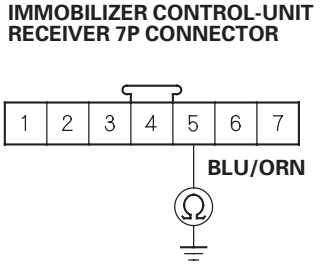

Wire side of female terminals

Is there continuity?

YES—Repair a short in the wire.■

NO—Faulty immobilizer indicator, replace the gauge assembly.■

12. Try to start the engine.

    Does the engine start?

    YES—Go to step 13.

    NO—Go to step 18.

13. Turn the ignition switch OFF.

14. Disconnect the 7P connector from the immobilizer control unit-receiver.

15. Check for voltage between the immobilizer control unit-receiver 7P connector No. 7 (+B) terminal and body ground.

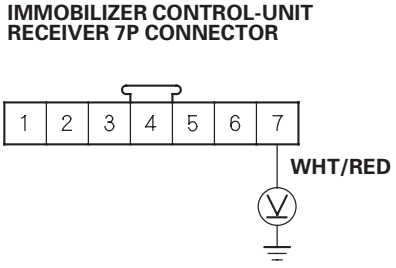

    Is there battery voltage?

    YES—Go to step 16.

    NO—Faulty No. 9 (7.5 A) fuse in the under-hood fuse/relay box. If the fuse is OK, check for an open in the wire between the immobilizer control unit-receiver and under-hood fuse/relay box.■

16. Remove the gauge assembly, and disconnect its 22P (20P*) connector (see page 22-74).
    *: '05-06 models

17. Check for continuity between the immobilizer control unit-receiver 7P connector No. 5 (IMOARM) terminal and gauge assembly 22P (20P*) connector No. 10 (No. 9*) terminal.
    *: '05-06 models

    '02-04 models

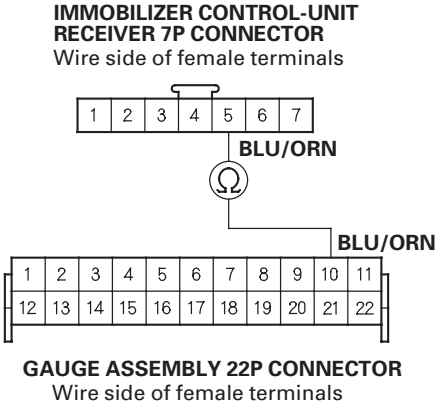

    '05-06 models

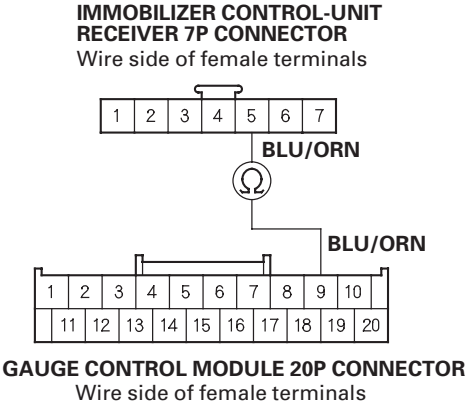

    Is there continuity?

    YES—Faulty immobilizer indicator, replace the gauge assembly.■

    NO—Repair an open in the wire.■

(cont'd)

Troubleshooting (cont'd)

18. Turn the ignition switch OFF.

19. Disconnect the 7P connector from the immobilizer control unit-receiver.

20. Disconnect the ECM/PCM connector E (31P).

21. Attach the ECM/PCM connector E (31P) No. 7 terminal to body ground with a jumper wire.

22. Turn the ignition switch ON (II).

23. Check for voltage between the immobilizer control unit-receiver 7P connector No. 6 (IG1) terminal and body ground.

IMMOBILIZER CONTROL-UNIT RECEIVER 7P CONNECTOR

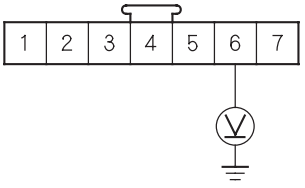

Wire side of female terminals

Is there battery voltage?

YES—Go to step 24.

NO—Check for these problems:

- Blown No. 6 (15 A) ('02-04 models) or No. 6 (20 A) ('05-06 models) fuse in the under-hood fuse/relay box.■
- Blown No. 32 (15 A) fuse in the auxiliary under-dash fuse/relay box ('05-06 models).■
- Faulty PGM-FI main relay 1.■
- An open in the wire between the immobilizer-control unit-receiver and under-hood fuse/relay box.■

24. Turn the ignition switch OFF.

25. Check for continuity between the immobilizer control unit-receiver 7P connector No. 1 (LG3) terminal and body ground.

IMMOBILIZER CONTROL-UNIT RECEIVER 7P CONNECTOR

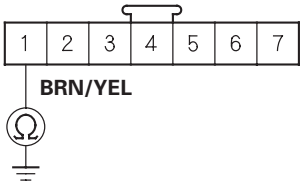

Wire side of female terminals

Is there continuity?

YES—Substitute a known-good immobilizer control unit-receiver and/or ECM/PCM.■

NO—Repair an open in the wire. If the wire is OK, repair G101.■

26. Turn the ignition switch OFF.

27. Connect the HDS to the data link connector.

28. Turn the ignition switch ON (II).

29. Look at the System Check in the Immobilizer Info with the HDS (see page 22-182).

Is the immobilizer system normal?

YES—Go back to step 1.

NO—Go to step 30.

30. Verify the System Check display on the HDS.

Does the HDS display the information?

YES—Go to step 31.

NO—Go to step 35.

31. Turn the ignition switch OFF.

32. Disconnect the 7P connector from the immobilizer control unit-receiver.

33. Disconnect the 31P E connector from the ECM/PCM.

34. Check for continuity between the immobilizer control unit-receiver 7P connector No. 2 (IMOCD) terminal and body ground.

IMMOBILIZER CONTROL-UNIT RECEIVER 7P CONNECTOR

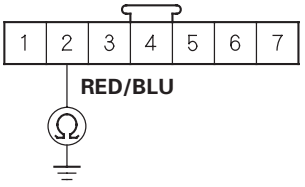

Wire side of female terminals

Is there continuity?

YES—Repair a short in the wire. ■

NO—Substitute a known-good immobilizer control unit-receiver and/or ECM/PCM. ■

35. Verify the System Check display on the HDS.

Does the HDS display the information?

YES—Go to step 36.

NO—Check the Possible Failures shown on the System Check display (see page 22-182). ■

36. Turn the ignition switch OFF.

37. Disconnect the 7P connector from the immobilizer control unit-receiver.

38. Disconnect the 31P E connector from the ECM/PCM.

39. Check for continuity between the immobilizer control unit-receiver 7P connector No. 2 (IMOCD) terminal and ECM/PCM connector E (31P) No. 27 terminal.

IMMOBILIZER CONTROL-UNIT RECEIVER 7P CONNECTOR
Wire side of female terminals

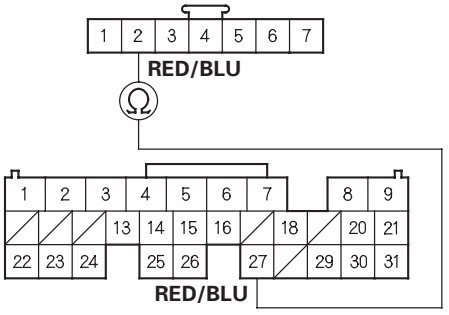

ECM/PCM CONNECTOR E (31P)
Wire side of female terminals

Is there continuity?

YES—Substitute a known-good immobilizer control unit-receiver and/or ECM/PCM. ■

NO—Repair an open in the wire. ■

System Check

1. Connect the HDS to the data link connector.
2. Turn the ignition switch ON (II).
3. Monitor the System Check in the Immobilizer Info with the HDS.
4. If the HDS displays the ''Immobilizer system is normal'', the immobilizer system is OK. If the HDS displays any other messages, check as follows:

Status Log No.	System Check	Possible Failures
A-1	Immobilizer system is not normal	• This key is not registered in the immobilizer unit. Try to register keys by using ''KEYS''. • The communication was not good between the antenna and the immobilizer key by influence of metal such as key chains. • The communication was not good between the antenna and the immobilizer key by battery voltage low.
A-2	Immobilizer system is not normal	• Intermittent interruption between transponder and immobilizer unit. • The immobilizer key type is different. It is not for this vehicle but for another one or for other company's one. • Key failure (transponder failure) • The communication was not good between the antenna and the immobilizer key by influence of metal such as key chains. • The communication was not good between the antenna and the immobilizer key by battery voltage low.
A-3	Immobilizer system is not normal	• The ignition switch was turned on with a non-immobilizer key. • The immobilizer key type is different. It is not for this vehicle but for another one or for other company's one. • Key failure (transponder failure) • The communication was not good between the antenna and the immobilizer key by influence of metal such as key chains. • The communication was not good between the antenna and the immobilizer key by battery voltage low. • Immobilizer unit failure
B-1	Immobilizer system is not normal	• The ECM/PCM was not registered. Try to register the ECM/PCM by using ''REPLACE ECM/PCM''. • The communication was not good between the ECM/PCM and the immobilizer unit by battery voltage low. • The communication was not good between the immobilizer unit and the ECM/PCM by influence of some noise.
B-2	Immobilizer system is not normal	• The ECM/PCM was not registered. Try to register the ECM/PCM by using ''REPLACE ECM/PCM''. • The communication was not good between the ECM/PCM and the immobilizer unit by battery voltage low. • The communication was not good between the immobilizer unit and the ECM/PCM by influence of some noise.
D-1	Immobilizer system is not normal	• Harness short from the ECM/PCM to the immobilizer unit. (S-net line short) • The communication was not good between the ECM/PCM and the immobilizer unit by battery voltage low. • The communication was not good between the immobilizer unit and the ECM/PCM by influence of some noise. • Immobilizer unit failure • ECM/PCM failure
D-3	Immobilizer system is not normal	• Blown fuse • Harness open from the ECM/PCM to the immobilizer unit. • The communication was not good between the ECM/PCM and the immobilizer unit by battery voltage low. • The communication was not good between the immobilizer unit and the ECM/PCM by influence of some noise. • Immobilizer unit failure • ECM/PCM failure

Status Log

If you suspect there is a immobilizer system problem, check the status log.

NOTE: Status log may not be available for all models. If you have an updated immobilizer control unit-receiver ('02-04 models) or a '05-06 models, status log should be available.

1. Connect the HDS to the data link connector.
2. Turn the ignition switch ON (II).
3. On the HDS screen, select Honda systems, select immobilizer set-up, select immobilizer information, then select status log.
4. Check the Status log count. Troubleshoot the status with the highest count first. If no counts are listed, the immobilizer system is OK. Continue with normal symptom troubleshooting.

Status Log No.	Detected Item	Probable Cause
A-1	KEY CODE MISMATCH (Code format normal, but code data is mismatch)	1. The key was not registered 2. Interference from metal such as key chains 3. Low battery voltage
A-2	KEY CODE MISMATCH (Code format failure)	1. Ignition switch was turned on with another type of immobilizer key or aftermarket key 2. Interference from metal such as key chains 3. Low battery voltage
A-3	KEY CODE MISMATCH (No key code or non-immobilizer key)	1. Ignition switch was turned on with another type of immobilizer key or aftermarket key 2. Interference from metal such as key chains 3. Low battery voltage 4. Key failure 5. Immobilizer control unit-receiver failure
B-1	ECM/PCM CODE MISMATCH (Code format normal, but code data is mismatch)	1. ECM/PCM was not registered correctly 2. Low battery voltage 3. Poor or loose terminal connections at the immobilizer control unit-receiver 4. Communication line electrical noise
B-2	ECM/PCM MISMATCH (Code format failure)	1. ECM/PCM was not registered correctly 2. Low battery voltage 3. Poor or loose terminal connections at the immobilizer control unit-receiver 4. Communication line electrical noise
D-1	SECURITY-NET LINE PROBLEM (Short to ground)	1. Low battery voltage 2. Poor or loose terminal connections at the immobilizer control unit-receiver and the ECM/PCM 3. Communication line electrical noise
D-3	SECURITY-NET LINE PROBLEM (Open line or ECM/PCM failure)	1. Open or short in the harness from the ECM/PCM to the immobilizer control unit-receiver 2 Low battery voltage 3 Poor or loose terminal connections at the immobilizer control unit-receiver and the ECM/PCM 4 Communication line electrical noise

Immobilizer Control Unit-Receiver Replacement

1. Remove the driver's dashboard lower cover (see page 20-63).

2. Remove the steering column covers (see page 17-25).

3. Disconnect the 7P connector (A) from the immobilizer control unit-receiver (B).

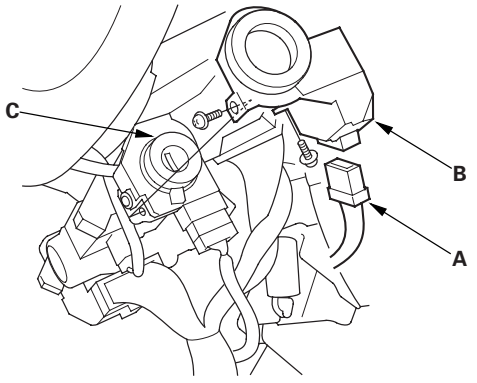

4. Remove the two screws and the immobilizer control unit-receiver from the ignition key cylinder (C).

5. Install the immobilizer control unit-receiver in the reverse order of removal.

6. After replacement, rewrite the unit with the HDS, then check the immobilizer system.

Component Location Index

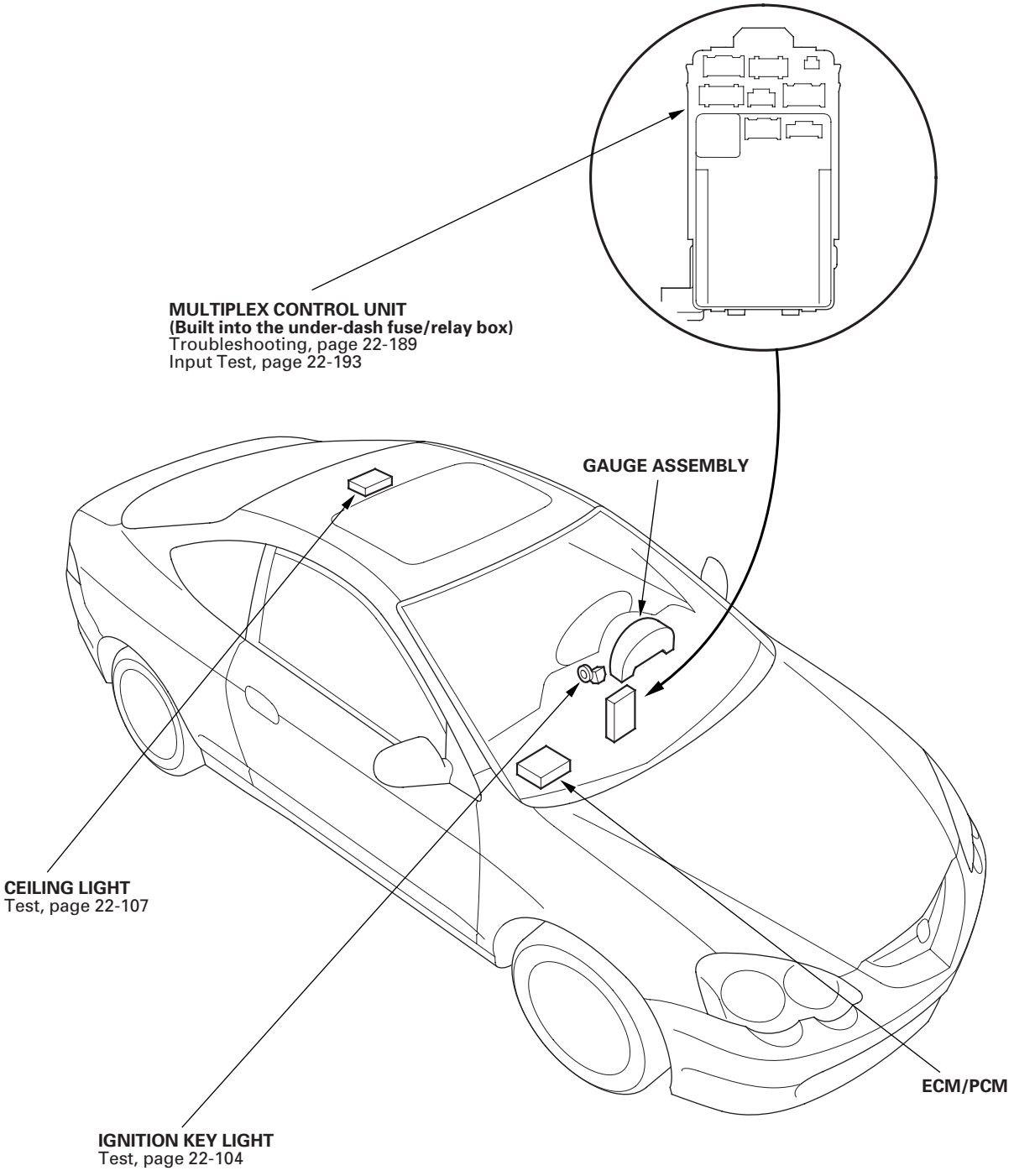

Circuit Diagram

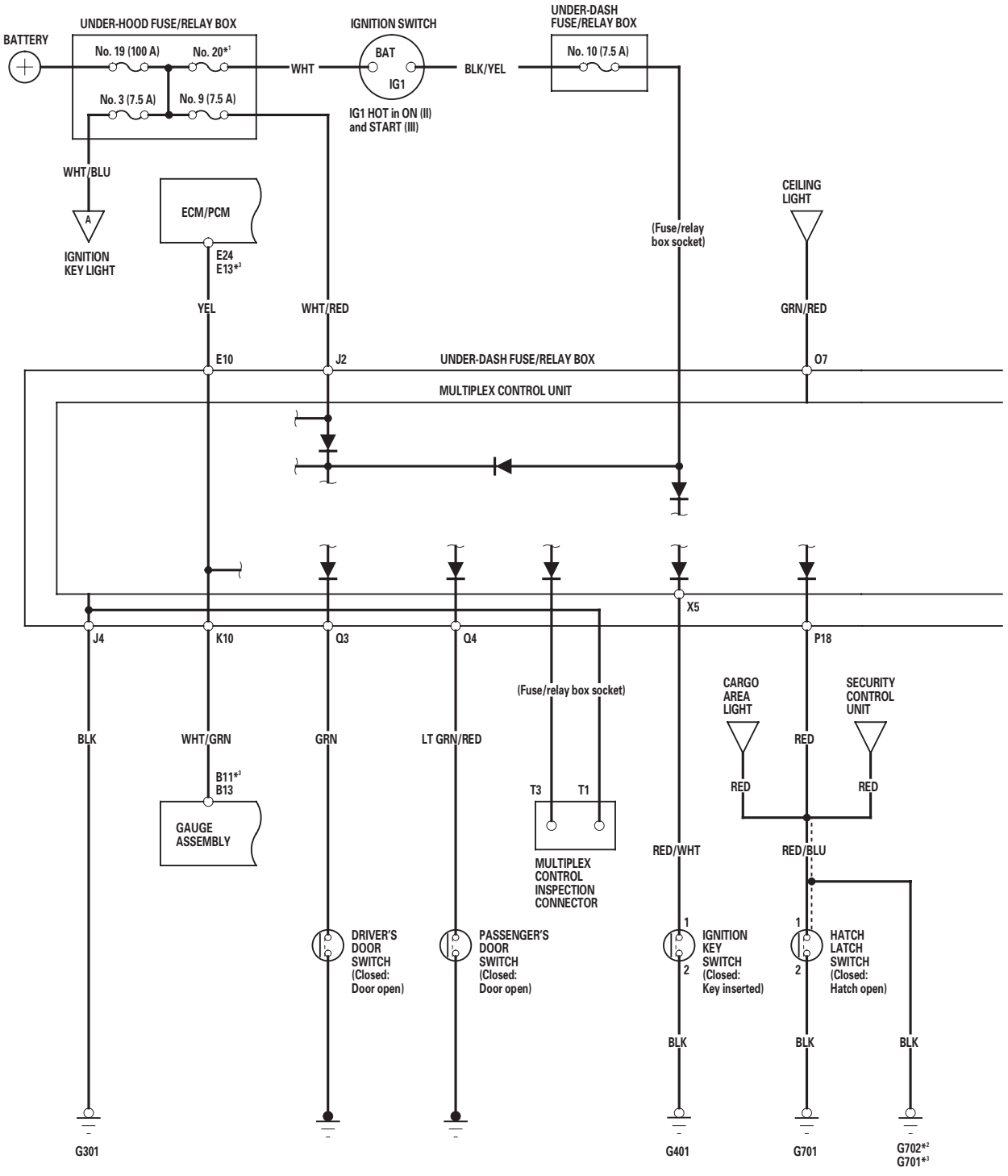

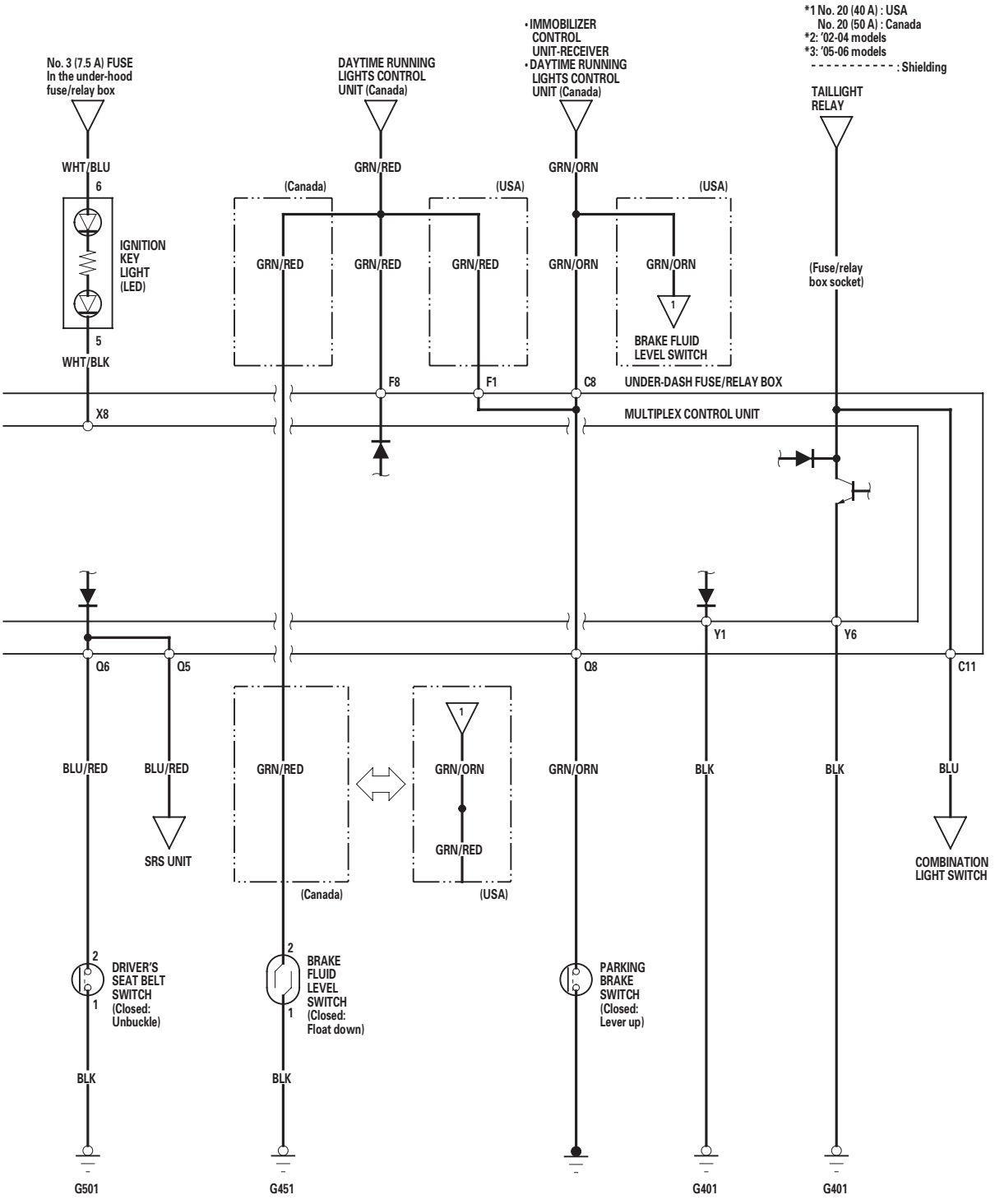
*1 No. 20 (40 A) : USA
No. 20 (50 A) : Canada
*2: '02-04 models
*3: '05-06 models
: Shielding
No. 3 (7.5 A) FUSE
In the under-hood
fuse/relay box
DAYTIME RUNNING
LIGHTS CONTROL
UNIT (Canada)
• IMMOBILIZER
CONTROL
UNIT-RECEIVER
• DAYTIME RUNNING
LIGHTS CONTROL
UNIT (Canada)
TAILLIGHT
RELAY
WHT/BLU
6
IGNITION
KEY
LIGHT
(LED)
5
WHT/BLK
GRN/RED
(Canada)
(USA)
GRN/ORN
(USA)
GRN/RED
GRN/RED
GRN/RED
GRN/ORN
GRN/ORN
1
BRAKE FLUID
LEVEL SWITCH
(Fuse/relay
box socket)
F8
F1
C8
UNDER-DASH FUSE/RELAY BOX
X8
MULTIPLEX CONTROL UNIT
Y1
Y6
Q6
Q5
Q8
C11
BLU/RED
BLU/RED
GRN/RED
1
GRN/ORN
GRN/RED
GRN/ORN
BLK
BLK
BLU
SRS UNIT
(Canada)
(USA)
COMBINATION
LIGHT SWITCH
2
DRIVER'S
SEAT BELT
SWITCH
(Closed:
Unbuckle)
1
2
BRAKE
FLUID
LEVEL
SWITCH
(Closed:
Float down)
1
PARKING
BRAKE
SWITCH
(Closed:
Lever up)
BLK
BLK
G501
G451
G401
G401

System Description

The multiplex control system has four internal functions:

- Multiplexing (sends multiple signals over shared wires)
- Wake up/sleep (runs at full power only on demand to reduce battery draw)
- Fail-safe (fixes or ignores faulty signals)
- Self-diagnosis (Mode 1 for the system, Mode 2 for input lines)

The system controls the function of these circuits:

- Entry light control (ignition key light and ceiling light)
- Wiper/washer (intermittent wipe and park functions)
- Interlock system
- Keyless/power door lock
- Gauge assembly, temperature gauge, and indicator lights
- HVAC (compressor and fan control)
- Key-in reminder
- Lights-on reminder
- Seat belt reminder

Multiplex Communication

To reduce the number of wire harnesses, digital signals are sent via shared multiplex communication lines rather than sending normal electrical signals through individual wires.

- The input signals from each switch are converted to digital signals at the central processing unit (CPU).
- The digital signals are sent from the transmitting unit to the receiving unit as serial signals.
- The transmitted signal is converted to a switch signal at the receiving unit, and it operates the related component or monitors a switch.
- There are exclusive communication lines between the ECM/PCM, the gauge assembly, the keyless control unit, and the under-dash fuse/relay box.

Wake-up and Sleep

The multiplex control system has ''wake-up'' and ''sleep'' functions to decrease parasitic draw on the battery when the ignition switch is OFF.

- In the sleep mode, the multiplex control unit stops functioning (communication and CPU control) when it is not necessary for the system to operate.
- As soon as any operation is requested (for example, a door is unlocked), the related control unit in the sleep mode immediately wakes up and begins to function.
- When the ignition switch is turned OFF, and the driver's or front passenger's door is opened, then closed, there is about a 40 second delay before the control unit goes from the wake-up mode to the sleep mode.
- If any door is open, the sleep mode will not function.
- If a key is in the ignition switch, the sleep mode will not function.
- When in sleep mode, the draw is reduced from 70—80 mA to less than 10 mA.

Fail-safe

To prevent improper operation, the multiplex control system has a fail-safe function. In the fail-safe mode, the output signal is fixed when any part of the system malfunctions (for example; a faulty control unit or communication line).
Each control unit has a hardware fail-safe function that fixes the output signal when there is any CPU malfunction, and a software fail-safe function that ignores the signal from the malfunctioning control unit and allows the system to operate normally.

Troubleshooting

Special Tools Required
MPCS service connector 07WAZ-001010A

Mode 1 Test

NOTE: Check for ECM/PCM DTC(s). Troubleshoot and repair the cause for the DTC(s) first.

1. Remove the driver's dashboard lower cover (see page 20-63).

2. Check the No. 9 (10 A) fuse in the under-hood fuse/relay box and the No. 10 (7.5 A) fuse in the under-dash fuse/relay box.

   Are the fuses OK?

   YES—Go to step 3.

   NO—Find and repair the cause of the blown fuse. ■

3. Turn the ignition switch ON (II).
   If the driver's seat belt is unbuckled, the seat belt reminder will beep 6 times.

4. Set the ceiling light to the middle position and close all the doors.

5. Connect the special tool (A) to the multiplex inspection connector (B).

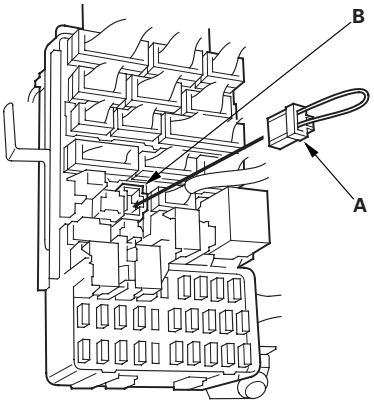

MODE 1: Ignition key light and ceiling light

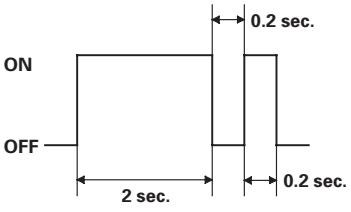

6. After about 5 seconds, the ignition key light and ceiling light should come on for 2 seconds, go out , then blink on for 0.2 second to show the system is now in Mode 1.

   Did the ignition key light and ceiling light indicate mode 1?

   YES—Go to step 8.

   NO—Go to step 7.

7. Check for continuity between the No. 4 terminal of the under-dash fuse/relay box connector J and body ground.

   Is there continuity?

   YES—Replace the under-dash fuse/relay box. ■

   NO—Repair the open in the wire. If the wire is OK, repair G301. ■

8. If there are any DTCs present, the ignition key light and ceiling light will blink to indicate the DTC(s). If more than one DTC is present, the DTCs will be displayed in ascending order. If there are no DTCs, the ignition key light and ceiling light will not blink again after the Mode 1 indication.

   Are there any DTCs?

   YES—Go to step 9.

   NO—Go to Mode 2 Test (see page 22-191).

9. Troubleshoot the DTC(s) in the order indicated using the following charts.

   If a faulty control unit is suspected, substitute it with a known-good part and recheck for DTCs.

   - If the DTC(s) is still present, go to the next step listed for the DTC.
   - If the DTC(s) is no longer present, replace the original part.

(cont'd)

Troubleshooting (cont'd)

Individual DTCs

Multiplex DTC	Probable Cause
1	The multiplex control unit cannot receive signals from the gauge assembly. 1. Faulty power or ground to the gauge assembly 2. Faulty gauge assembly 3. Faulty under-dash fuse/relay box
2	The multiplex control unit cannot receive signals from the ECM/PCM 1. Faulty power or ground to the ECM/PCM 2. Faulty ECM/PCM* 3. Faulty under-dash fuse/relay box
3	Internal failure of the multiplex control unit 1. Faulty under-dash fuse/relay box
5	The gauge assembly cannot receive signals from the ECM/PCM 1. Faulty power or ground to the ECM/PCM 2. Faulty gauge assembly
6	The ECM/PCM cannot receive signals from the multiplex control unit and the gauge assembly 1. Faulty power or ground to the ECM/PCM 2. Faulty gauge assembly

* Before replacing a faulty ECM/PCM, make sure it has the latest software revision. Update if necessary before swapping or replacing.

Multiple DTCs

Multiplex DTCs	Probable Cause
1, 2 and 3 & ECM DTC P0600 Simultaneously	Short to ground on one of the communication wires. 1. Short to ground on the YEL wire between the ECM/PCM terminal E24 or E13 and the under-dash fuse/relay box terminal E10 2. Short to ground on the WHT/GRN wire between the gauge assembly terminal B13 or B11 and under-dash fuse/relay box terminal K10
1 and 6 Simultaneously	Open in the communication wire
	1. Open in WHT/GRN wire between the under-dash fuse/relay box terminal K10 and the gauge assembly terminal B13 or B11
2 and 5 Simultaneously	Open in the communication wire
	1. Open in the YEL wire between the under-dash fuse/relay box terminal E10 and ECM/PCM terminal E10 and ECM/PCM terminal E24 or E13

Mode 2 Test

1. From mode 1, disconnect the special tool from the multiplex inspection connector for 5 to 10 seconds, and then reconnect it.

2. The ignition key light and ceiling light should come on for 2 seconds, go out, then blink twice, 0.2 seconds each time. The system is now in Mode 2.

3. Operate the switches listed below: If the circuit is OK, the ignition key light and ceiling light will blink once. If the circuit is faulty, the lights will not blink.

   Tip: Operating the switches most closely related to the problem you are diagnosing is a quick way of testing the circuits integrity.

Switch	Lights blink when:
Windshield washer switch	Washer switch pulled
Windshield wiper switch	Switch in the INT position
Driver's door switch	Driver's door is opened
Passenger's door switch	Passenger's door is opened
Hatch latch switch	Hatch is opened
Parking brake switch	Parking brake applied
Driver's door lock switch	Pushed to lock and unlock
Driver's door knob switch	Knob in UNLOCK or LOCK position
A/C switch	A/C switch ON and blower switch ON
Headlight switch	Switched to the PARK position
Brake pedal position switch	Brake pedal pressed
Transmission range switch	• Shift P, R, D, D_3 (A/T) • Upshift then downshift (M/T)

4. If all inputs were confirmed, or multiple circuits failed at the same time in Mode 2, go to the Multiplex Sleep Mode Test. If a single switch fails in Mode 2, troubleshoot its circuit.

(cont'd)

Troubleshooting (cont'd)

Multiplex Sleep Mode Test

1. Connect the positive lead of a voltmeter to terminal No. 10 of the under-dash fuse/relay box connector E (YEL) or K (WHT/GRN) and the negative lead to body ground.

2. Connect an ammeter between the negative battery cable and the negative battery post.

3. Remove the special tool from the multiplex inspection connector.

4. Close the doors, the hatch, turn the headlights off, turn the ignition switch OFF and remove the key.

5. Within 1 minute, the voltage on the communication wire (E10 or K10) should change from about 4—10 V to battery voltage and the amperage at the negative battery terminal should drop from about 70—80 mA to less than 10 mA.

6. Record your findings and go to the Multiplex Wake-up Mode Test.

Multiplex Wake-up Mode Test

1. From the Sleep Mode, wake-up the multiplex system by performing one of the following operations:

Operation	Method used for wake up
Cycle ignition switch ON (II)	All multiplex units wake up simultaneously (regardless of ability to communicate)
Turn combination light switch to parking light position	Multiplex control unit wakes up the other units via communication lines.
Open the driver's door	Multiplex control unit wakes up the other units via communication lines.

2. As the system shifts to its Wake-up (Active) Mode, communication wire voltage will return to 4—10 V and the battery terminal current will return to 70—80 mA.

3. If the system does not go into Sleep Mode or Wake-up Mode properly, perform the Multiplex Control Unit Input Test (see page 22-193).

   NOTE: If multiple circuits fail to respond in the Mode 2 tests and/or the multiplex circuit fails to go into Sleep Mode or Wake-up Mode, it may mean that a control unit failed without triggering a DTC in Mode 1. Perform the Multiplex Control Unit Input Test (see page 22-193).
   If the input test confirms that all the inputs are working properly, substitute a known-good multiplex control unit, gauge assembly or ECM/PCM, one at a time. If the system works properly after swapping one of the above components, replace the original component.

Multiplex Control Unit Input Test

1. Remove the driver's dashboard lower cover (see page 20-63).

2. Disconnect the under-dash fuse/relay box connectors C, E, F, J, K, O, P, Q, X and Y.

   NOTE: All connectors are wire side of female terminals.

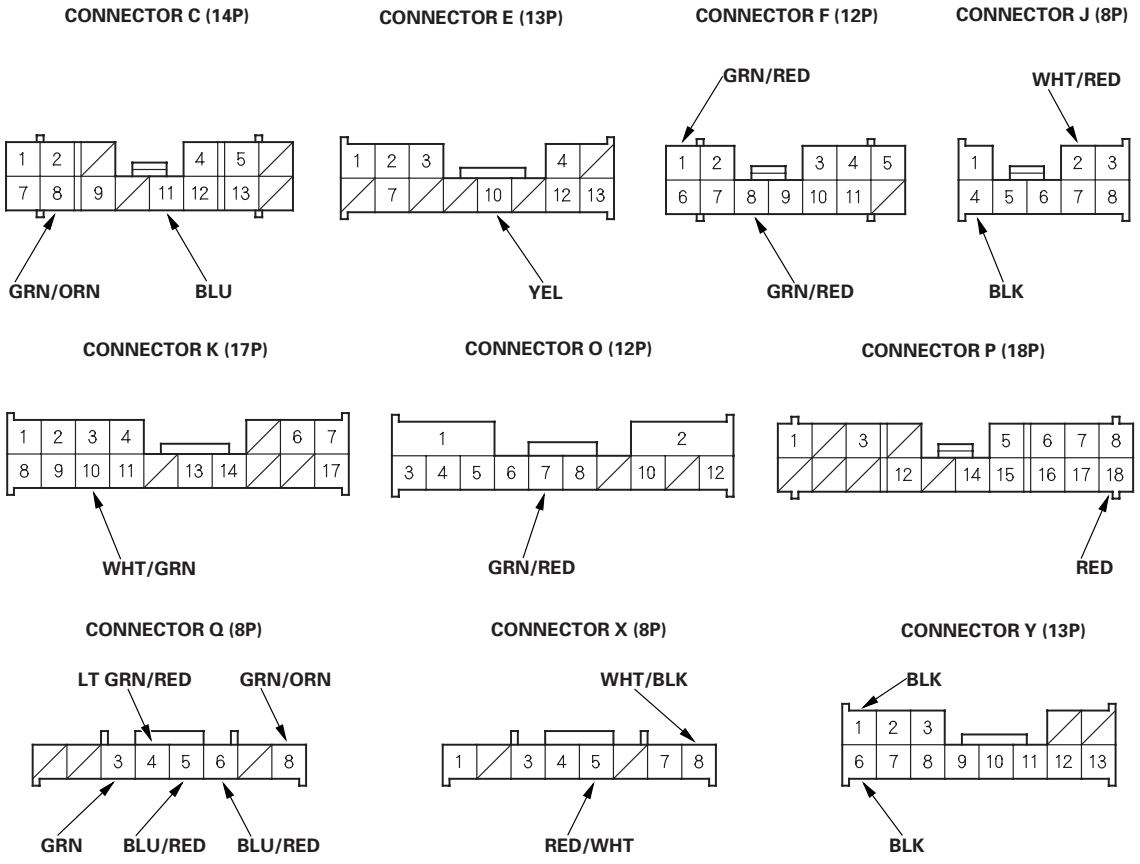

3. Inspect the connector and socket terminals to be sure they are all making good contact.

   - If the terminals are bent, loose or corroded, repair them as necessary, and recheck the system.
   - If the terminals look OK, go to step 4.

(cont'd)

Multiplex Control Unit Input Test (cont'd)

4. With the connectors still disconnected, make these input tests at the connector.

   - If any test indicates a problem, find and correct the cause, then recheck the system.
   - If all the input tests prove OK, go to step 5.

Cavity	Wire	Test condition	Test: Desired result	Possible cause if result is not obtained
J4	BLK	Under all conditions	Check for continuity to ground: There should be continuity.	• Poor ground (G301) • An open in the wire
Y6	BLK	Under all conditions	Check for continuity to ground: There should be continuity.	• Poor ground (G401) • An open in the wire
Y1	BLK	Under all conditions	Check for continuity to ground: There should be continuity.	• Poor ground (G401) • An open in the wire

5. Reconnect the connectors to the under-dash fuse/relay box, and make these input tests at the appropriate connectors on the under-dash fuse/relay box.

   - If any test indicates a problem, find and correct the cause, then recheck the system.
   - If all the input tests prove OK, the multiplex control unit must be faulty, replace the under-dash fuse/relay box assembly.

Cavity	Wire	Test condition	Test: Desired result	Possible cause if result is not obtained
J2	WHT/RED	Under all conditions	Check for voltage to ground: There should be battery voltage.	• Blown No. 9 (7.5 A) fuse in the under-hood fuse/relay box • An open in the wire
Q3	GRN	Driver's door open	Check for voltage to ground: There should be 1 V or less.	• Faulty driver's door switch • An open in the wire
		Driver's door closed	Check for voltage to ground: There should be 5 V or more.	• Faulty driver's door switch • Short to ground
Q4	LT GRN/RED	Passenger's door open	Check for voltage to ground: There should be 1 V or less.	• Faulty passenger's door switch • An open in the wire
		Passenger's door closed	Check for voltage to ground: There should be 5 V or more.	• Faulty passenger's door switch • Short to ground
Q8 . C8 . F1	GRN/ORN . GRN/ORN . GRN/RED	Parking brake lever up	Check for voltage to ground: There should be 1 V or less.	• Faulty parking brake switch • An open in the wire
		Parking brake lever down	Check for voltage to ground: There should be 5 V or more.	• Faulty parking brake switch • Short to ground
Q5	BLU/RED	Ignition switch ON (II) driver's seat belt is unbuckled.	Check for voltage to ground: There should be 1 V or less.	• Faulty driver's seat belt switch • Poor ground (G551) • An open in the wire
Q6	BLU/RED			
		Ignition switch ON (II) driver's seat belt is buckled.	Check for voltage to ground: There should be 5 V or more.	• Faulty driver's seat belt switch • Short to ground
P18	RED	Hatch open	Check for voltage to ground: There should be 1 V or less.	• Faulty hatch latch switch • Poor ground (G701) • An open in the wire
		Hatch closed	Check for voltage to ground: There should be 5 V or more.	• Faulty hatch latch switch • Short to ground
X5	RED/WHT	Ignition key is in the ignition switch	Check for voltage to ground: There should be 1 V or less.	• Faulty ignition key switch • Poor ground (G401) • An open in the wire
		Ignition key is out of the ignition switch	Check for voltage to ground: There should be 5 V or more.	• Faulty ignition key switch • Short to ground

Cavity	Wire	Test condition	Test: Desired result	Possible cause if result is not obtained
X8	WHT/BLK	Under all conditions	Attach to ground: The ignition key light should come on.	• Blown No. 3 (7.5 A) fuse in the under-hood fuse/relay box • Blown LED • An open in the wire
O7	GRN/RED	Ceiling light switch in the middle position, all doors closed	Attach to ground: The ceiling light should come on.	• Blown No. 3 (7.5 A) fuse in the under-hood fuse/relay box • Faulty ceiling light • An open in the wire
C11	BLU	Under all conditions	Attach to ground: Dash lights should come on.	• Blown No. 2 (15 A) [No. 2 (10 A)] fuse in the under-hood fuse/relay box • Faulty taillight relay • An open in the wire
F8	GRN/RED	Brake fluid reservoir float in down position (brake fluid removed)	Check for voltage to ground: There should be less than 1 V.	• Faulty brake fluid level switch • An open in the wire
		Brake fluid reservoir float in up position (brake fluid at full level)	Check for voltage to ground: There should be 5 V or more.	• Faulty brake fluid level switch • Short to ground
E10	YEL	Under all conditions	Check for voltage to ground: There should be battery voltage in the sleep mode and 3—7 V when awake.	An open or short in the wire
K10	WHT/GRN	Under all conditions	Check for voltage to ground: There should be battery voltage in the sleep mode and 3—7 V when awake.	An open or short in the wire

[ ] : '05-06 models

Component Location Index

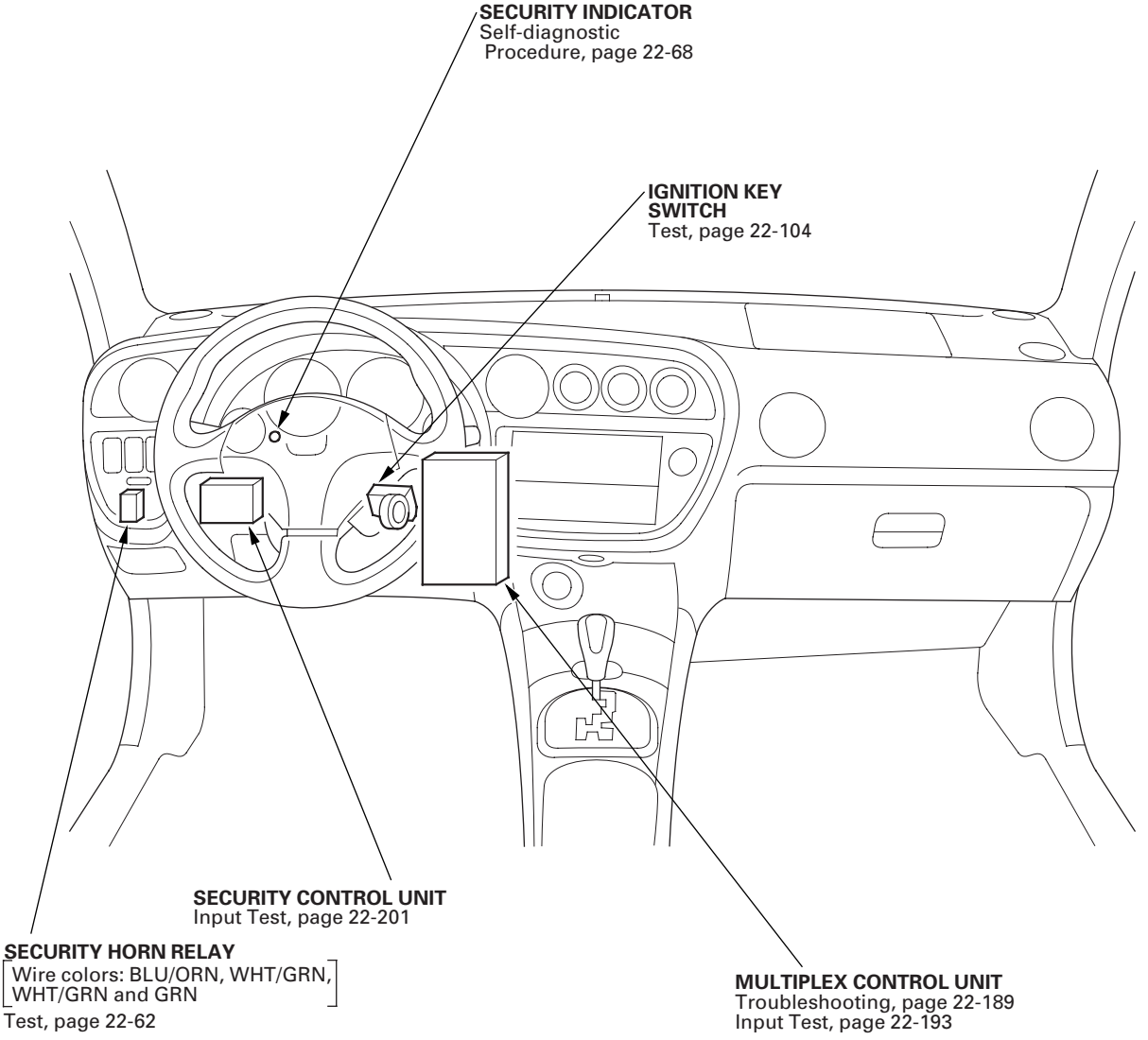

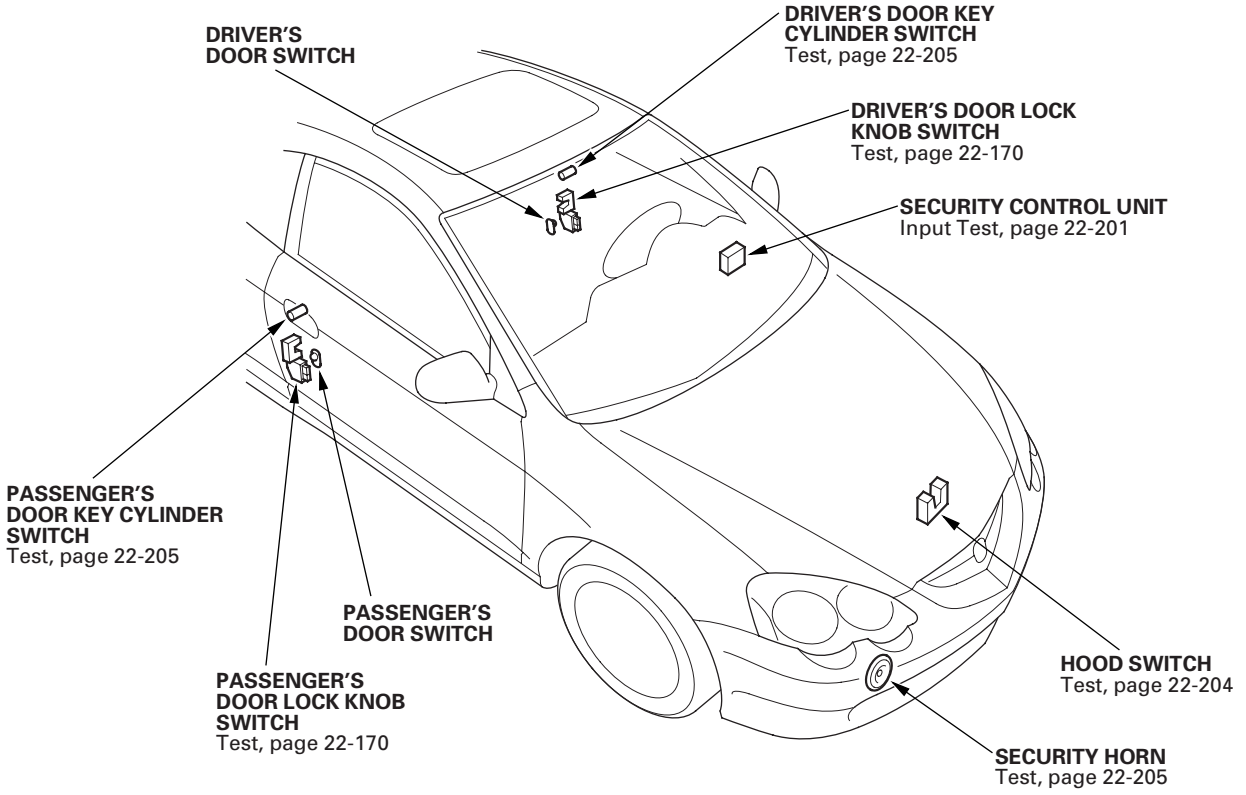
DRIVER'S DOOR SWITCH
DRIVER'S DOOR KEY CYLINDER SWITCH
Test, page 22-205
DRIVER'S DOOR LOCK KNOB SWITCH
Test, page 22-170
SECURITY CONTROL UNIT
Input Test, page 22-201
PASSENGER'S DOOR KEY CYLINDER SWITCH
Test, page 22-205
PASSENGER'S DOOR SWITCH
PASSENGER'S DOOR LOCK KNOB SWITCH
Test, page 22-170
HOOD SWITCH
Test, page 22-204
SECURITY HORN
Test, page 22-205

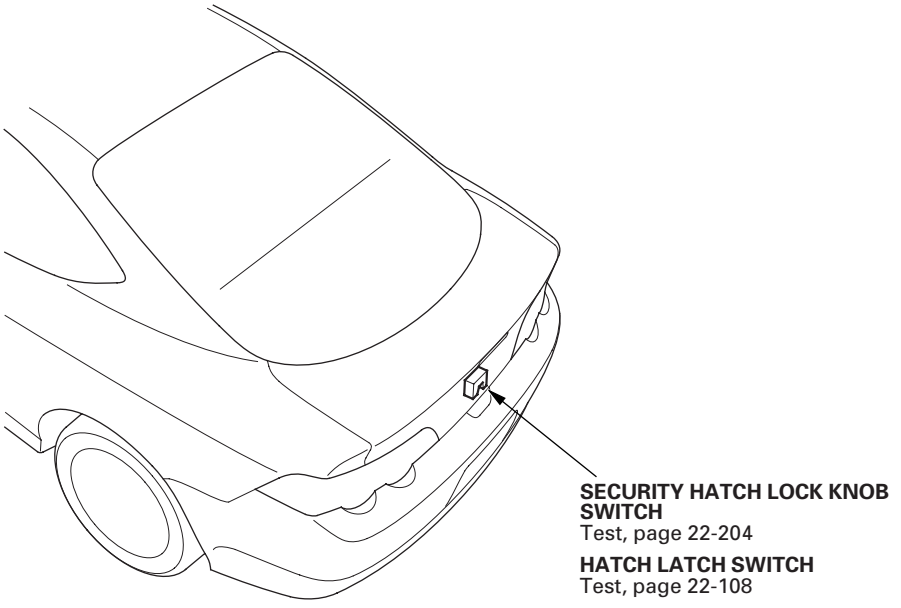
SECURITY HATCH LOCK KNOB SWITCH
Test, page 22-204
HATCH LATCH SWITCH
Test, page 22-108

Circuit Diagram

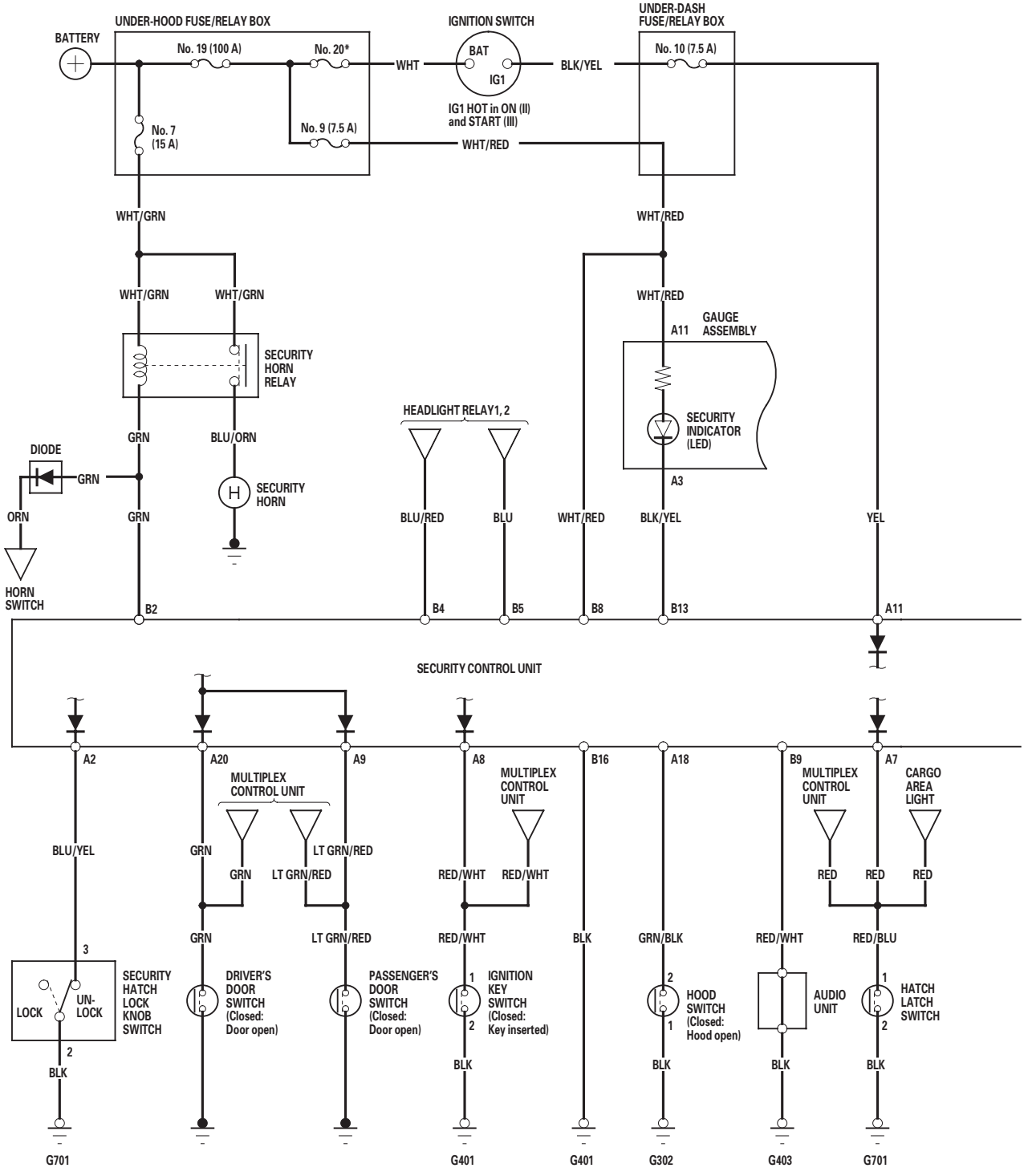

*No. 20 (40 A) : USA
No. 20 (50 A) : Canada

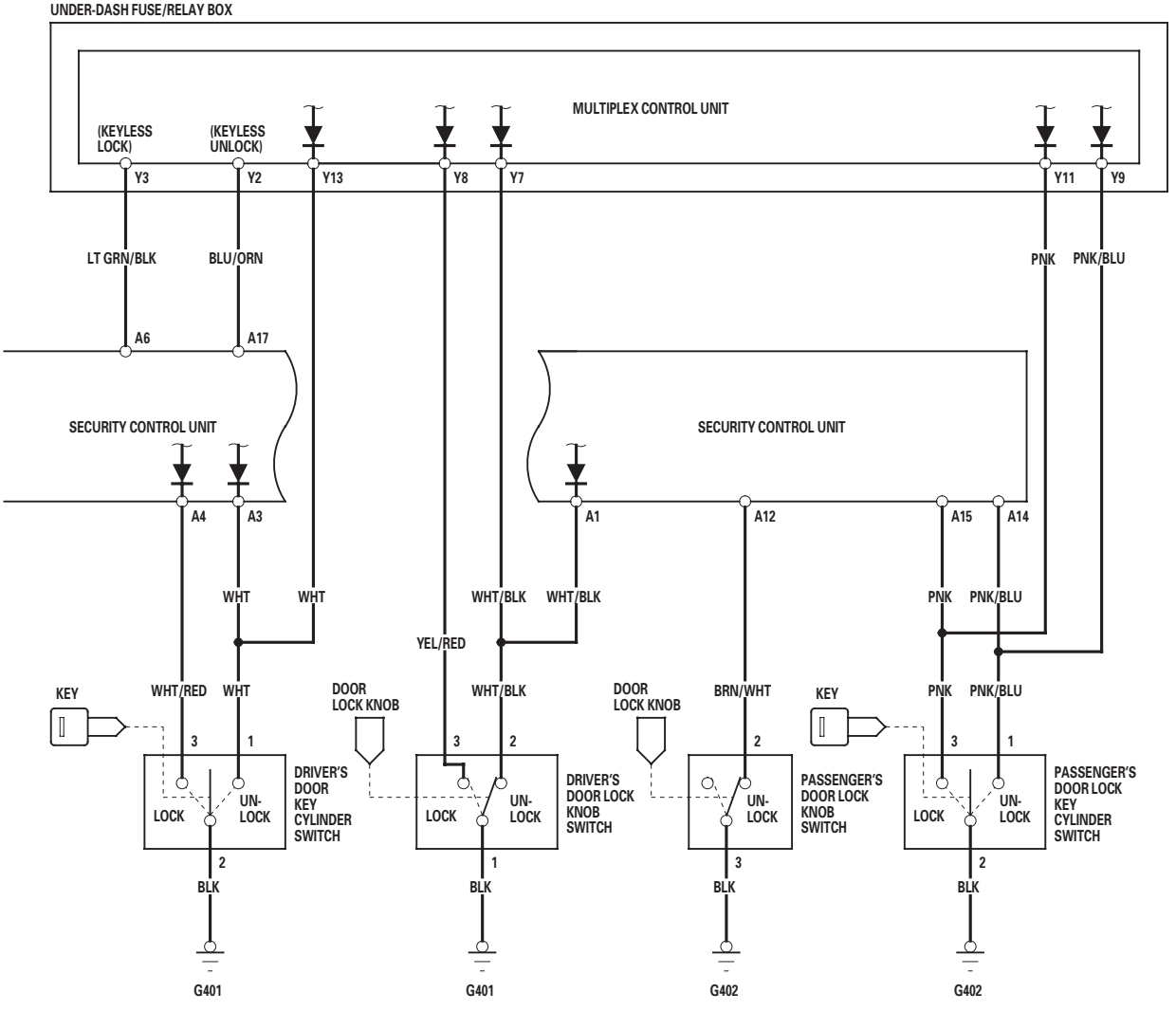

System Description

Security Alarm System

The security alarm system is armed automatically after the doors, hood, and hatch are closed and locked. For the system to arm, the ignition switch must be off and the key removed, and the security control unit must receive signals that the doors, hood, and hatch are closed and locked. The alarm can be disarmed at any time by unlocking either door with the key or the remote transmitter.

When everything is closed and locked, none of the control unit inputs are grounded (switches open). 15 seconds after the doors are locked with the key or the lock knob, or immediately after locking the doors with the remote transmitter, the system arms and the security indicator on the gauge assembly flashes.

If one of the switches is misadjusted or there is a short in the system, the system will not arm. As long as the control unit continues to receive a ground signal, it senses that the vehicle is not closed and locked, and it will not arm. Conversely, a switch that is slightly misadjusted can sound an alarm for no apparent reason. In this case, it may only take a significant change in outside temperature, the vibration of a passing truck, or someone bumping into the vehicle to make the alarm sound.

If anything is opened or improperly unlocked after the system is armed, the control unit receives a ground signal from that switch. The system sounds the alarm when any of these things occur:

- The ignition switch is turned ON (II)
- A door is forced open
- A door or hatch is unlocked without using the key or the remote transmitter
- The hood is opened
- The hatch is opened
- The audio unit is removed

When the system sounds the alarm because of one of these violations, the security horn sounds and the headlight (low beam), parking lights, taillights, and side marker lights flash for 120 seconds. The alarm then shuts off and the system rearms. The alarm can be stopped by unlocking either door with the key or the remote transmitter.

When the panic button is pressed on the remote transmitter, the security horn sounds and the headlights (low beam), parking lights, taillights, and side marker lights flash for 30 seconds. The alarm then shuts off, locks the doors, and arms the system.

Security Control Unit Input Test

1. Remove the driver's dashboard lower cover (see page 20-63).

2. Disconnect the 20P connector (A) and 16P connector (B) from the control unit (C).

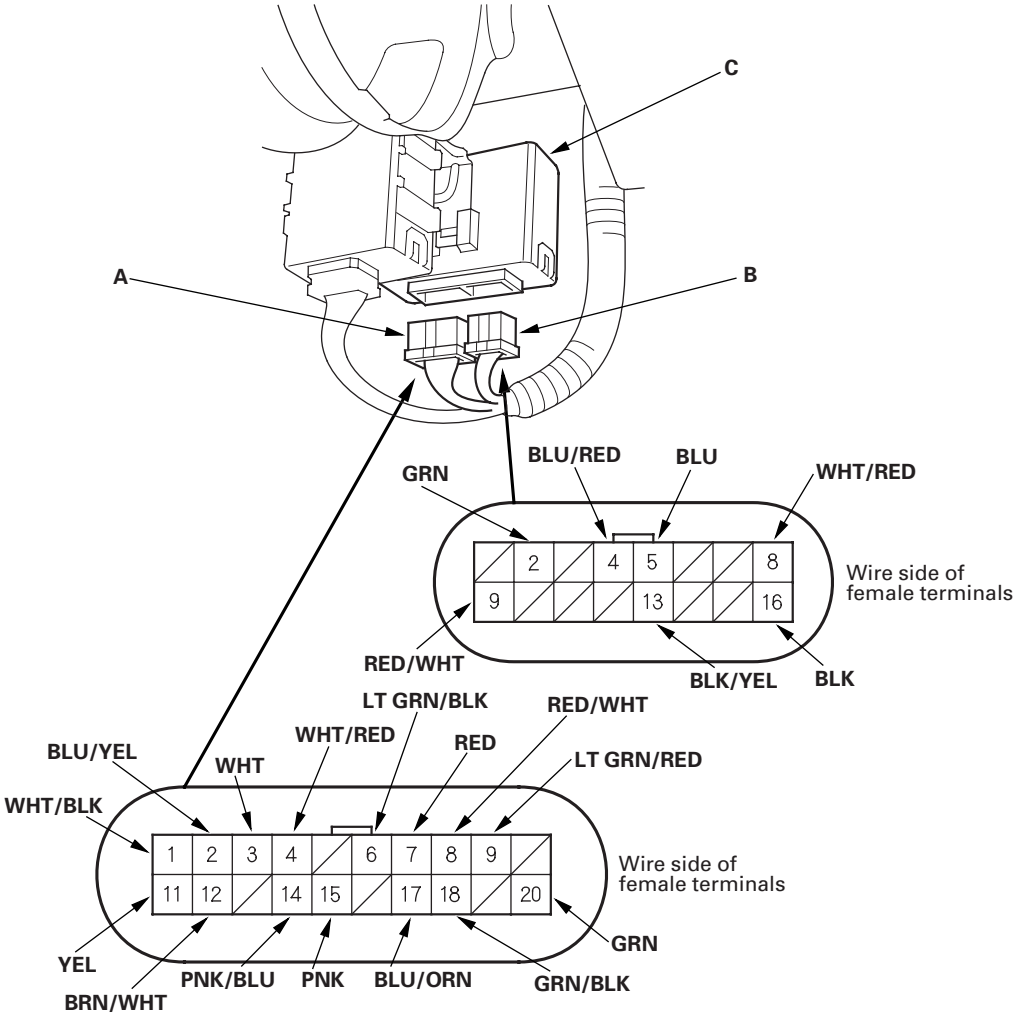

3. Inspect all the connector and socket terminals to be sure they are all making good contact.

   - If the terminals are bent, loose or corroded, repair them as necessary, and recheck the system.
   - If the terminals look OK, go to step 4.

(cont'd)

Security Control Unit Input Test (cont'd)

4. With the connectors still disconnected, make these input tests at the connector.

   - If any test indicates a problem, find and correct the cause, then recheck the system.
   - If all the input tests prove OK, go to step 5.

CONNECTOR A:

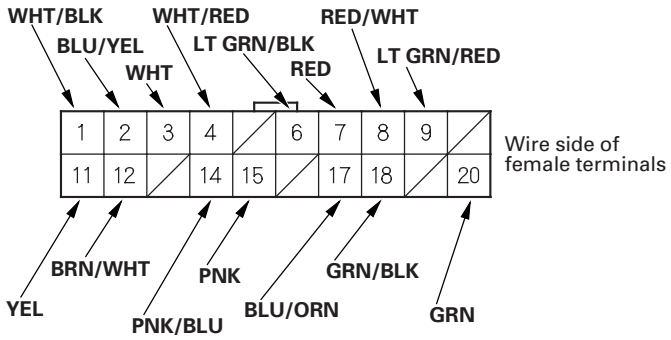

CONNECTOR B:

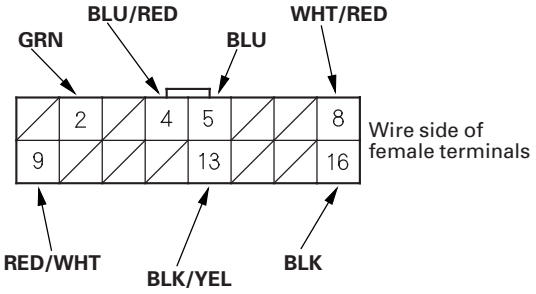

Cavity	Wire	Test condition	Test: Desired result	Possible cause if result is not obtained
B16	BLK	Under all conditions	Check for continuity to ground: There should be continuity.	• Poor ground (G401) • An open in the wire
B8	WHT/RED	Under all conditions	Check for voltage to ground: There should be battery voltage.	• Blown No. 9 (7.5 A) fuse in the under-hood fuse/relay box • An open in the wire
A11	YEL	Ignition switch ON (II)	Check for voltage to ground: There should be battery voltage.	• Blown No. 10 (7.5 A) fuse in the under-dash fuse/relay box • An open in the wire
B2	GRN	Under all conditions	Attach to ground: The security horn should sound.	• Blown No. 7 (15 A) fuse in the under-hood fuse/relay box • Faulty security horn relay • Faulty security horn • An open in the wire
B13	BLK/YEL	Under all conditions	Attach to ground: The security indicator should come on.	• Blown No. 9 (7.5 A) fuse in the under-dash fuse/relay box • Faulty gauge assembly • An open in the wire
B9	RED/WHT	Under all conditions	Check for continuity to ground: There should be continuity.	• Poor ground (G403) • Faulty audio unit • An open in the wire
A6	LT GRN/BLK	Under all conditions	Check for continuity between the A6 terminal and multiplex control unit connector Y3 terminal: There should be continuity.	An open in the wire
A17	BLU/ORN	Under all conditions	Check for continuity between the A17 terminal and multiplex control unit connector Y2 terminal: There should be continuity.	An open in the wire
B4	BLU/RED	Under all conditions	Attach to ground: The headlights (low beam) should come on.	• Blown No. 15 or 17 (20 A) fuse in the under-hood fuse/relay box • Faulty headlight relay 1 or 2 • Blown bulb • An open in the wire
B5	BLU	Under all conditions	Attach to ground: The dash lights and parking lights, taillights should come on.	• Blown No. 2 (15 A) [No. 2 (10 A)] fuse in the under-hood fuse/relay box • Faulty taillight relay • An open in the wire

[ ] : '05-06 models

5. Reconnect the connectors to the security control unit, and perform the following input tests at the appropriate connector.

- If any test indicates a problem, find and correct the cause, then recheck the system.
- If all the input tests prove OK, the security control unit internal circuit must be faulty, replace the control unit.

Cavity	Wire	Test condition	Test: Desired result	Possible cause if result is not obtained
A20	GRN	Driver's door open	Check for voltage to ground: There should be 1 V or less.	• Faulty driver's door switch • An open in the wire • A short to ground
		Driver's door closed	Check for voltage to ground: There should be 5 V or more.	
A9	LT GRN/RED	Passenger's door open	Check for voltage to ground: There should be 1 V or less.	• Faulty passenger's door switch • An open in the wire • A short to ground
		Passenger's door closed	Check for voltage to ground: There should be 5 V or more.	
A18	GRN/BLK	Hood open	Check for voltage to ground: There should be 1 V or less.	• Faulty hood switch • Poor ground (G302) • An open in the wire • A short to ground
		Hood closed	Check for voltage to ground: There should be 5 V or more.	
A7	RED	Hatch open	Check for voltage to ground: There should be 1 V or less. NOTE: Remove the No. 3 (7.5 A) fuse from the under-hood fuse/relay box.	• Faulty hatch latch switch • Poor ground (G701) • An open in the wire • A short to ground
		Hatch closed	Check for voltage to ground: There should be 5 V or more. NOTE: Remove the No. 3 (7.5 A) fuse from the under-hood fuse/relay box.	
A1	WHT/BLK	Driver's door lock knob unlocked	Check for voltage to ground: There should be 1 V or less.	• Faulty driver's door lock knob switch • Poor ground (G401) • An open in the wire • A short to ground
		Driver's door lock knob locked	Check for voltage to ground: There should be 5 V or more.	
A12	BRN/WHT	NOTE: First lock both doors with the driver's door lock switch. Passenger's door lock knob unlocked	Check for voltage to ground: There should be 1 V or less.	• Faulty passenger's door lock knob switch • Poor ground (G402) • An open in the wire • A short to ground
		Passenger's door lock knob locked	Check for voltage to ground: There should be 5 V or more.	
A4	WHT/RED	Driver's door key cylinder locked	Check for voltage to ground: There should be 1 V or less.	• Faulty driver's door key cylinder switch • Poor ground (G401) • An open in the wire • A short to ground
		Driver's door key cylinder in neutral/ unlocked	Check for voltage to ground: There should be 5 V or more.	
A3	WHT	Driver's door key cylinder unlocked	Check for voltage to ground: There should be 1 V or less.	• Faulty driver's door key cylinder switch • Poor ground (G401) • An open in the wire • A short to ground
		Driver's door key cylinder in neutral/ locked	Check for voltage to ground: There should be 5 V or more.	
A15	PNK	Passenger's door key cylinder locked	Check for voltage to ground: There should be 1 V or less.	• Faulty passenger's door key cylinder switch • Poor ground (G402) • An open in the wire • A short to ground
		Passenger's door key cylinder in neutral/ unlocked	Check for voltage to ground: There should be 5 V or more.	
A14	PNK/BLU	Passenger's door key cylinder unlocked	Check for voltage to ground: There should be 1 V or less.	
		Passenger's door key cylinder in neutral/ locked	Check for voltage to ground: There should be 5 V or more.	
A8	RED/WHT	Ignition key is in the ignition switch	Check for voltage to ground: There should be 1 V or less.	• Poor ground (G401) • An open in the wire • A short to ground
		Ignition key is out of the ignition switch	Check for voltage to ground: There should be 5 V or more.	
A2	BLU/YEL	Doors and hatch are locked	Check for voltage to ground: There should be 1 V or less.	• Faulty security hatch lock knob switch • Poor ground (G701) • An open in the wire • A short to ground
		Doors and hatch are unlocked	Check for voltage to ground: There should be 5 V or more.	

Hood Switch Test

1. Open the hood, and disconnect the 2P connector (A) from the hood switch (B).

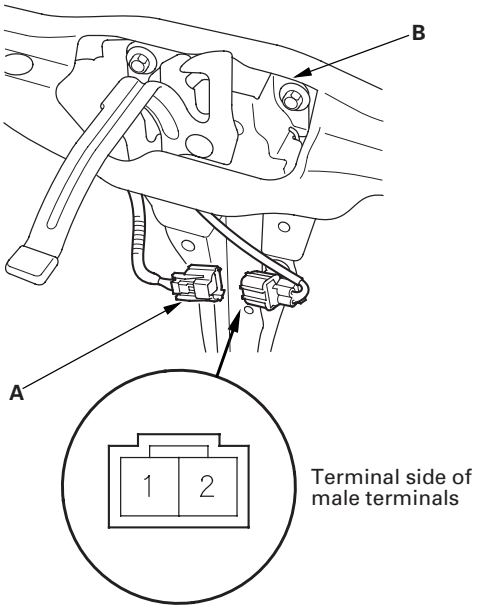

2. Check for continuity between the No. 1 and No. 2 terminals.
   - There should be continuity when the hood is opened (lever released).
   - There should be no continuity when the hood is closed (lever pushed down).
3. If the continuity check is not as specified, replace the switch.

Security Hatch Lock Knob Switch Test

1. Open the hatch, and remove the hatch lower trim (see page 20-54).
2. Disconnect the 3P connector (A) from the security hatch lock knob switch (B).

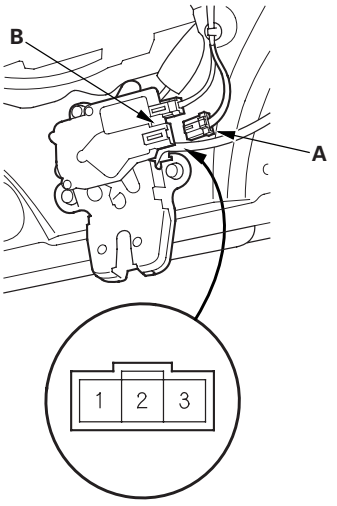

3. Use the driver's door lock switch to unlock and lock the hatch, then check for continuity between the No. 2 and No. 3 terminals.
   - There should be continuity when the hatch is unlocked.
   - There should be no continuity when the hatch is locked.
4. If the continuity check is not as specified, replace the switch.

Door Key Cylinder Switch Test

1. Remove the door panel (see page 20-5).

2. Disconnect the 3P connector from the key cylinder switch.

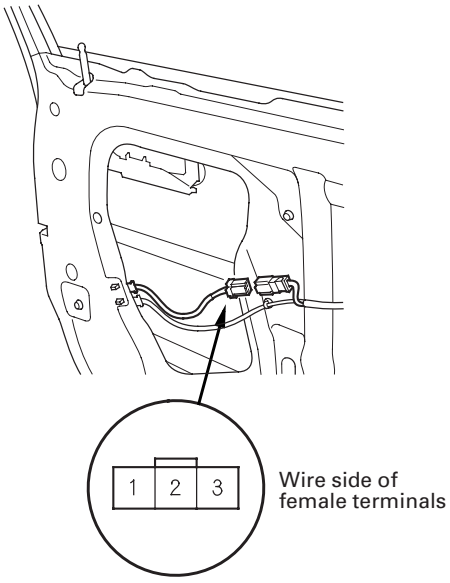

3. Check for continuity between the terminals.

   - There should be continuity between the No. 2 and No. 3 terminals when the door key cylinder switch is in the LOCK position.
   - There should be continuity between the No. 1 and No. 2 terminals when the door key cylinder switch is in the UNLOCK position.
   - There should be no continuity between No. 1, No. 2, and No. 3 terminals when the door key cylinder switch is in the neutral position.

4. If the continuity is not as specified, replace the switch.

Security Horn Test

1. Remove the front bumper.

   - ’02-04 models (see page 20-90)
   - ’05-06 models (see page 20-91)

2. Disconnect the 1P connector from the horn (under the right headlight).

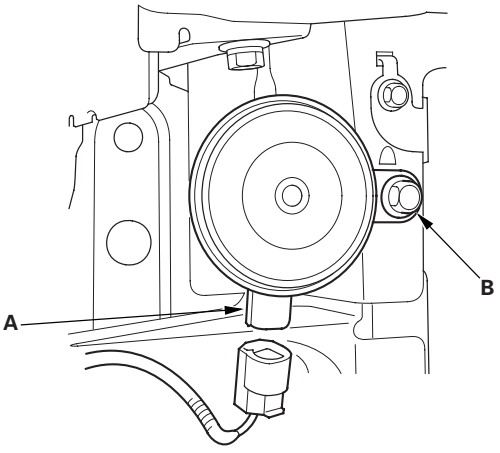

3. Test the horn by connecting battery power to the terminal (A) and grounding the body ground (B). The horn should sound.

4. If the horn fails to sound, check for a faulty mounting bolt. If the bolt is OK, replace the horn.

Component Location Index

Canada

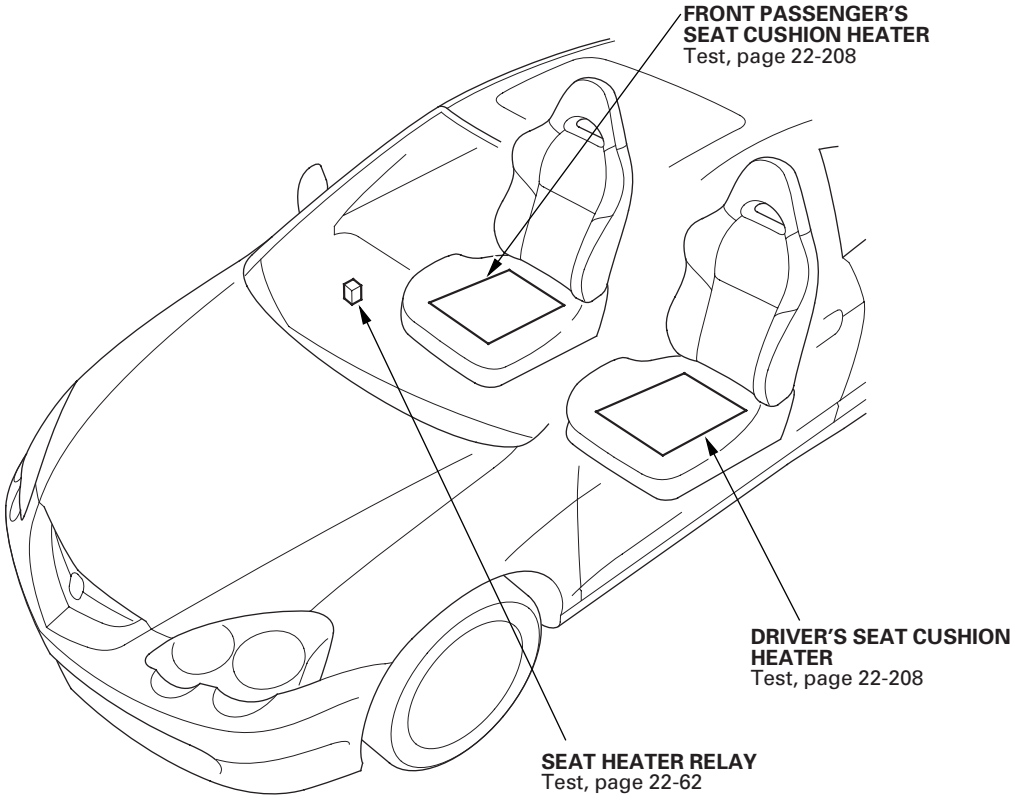

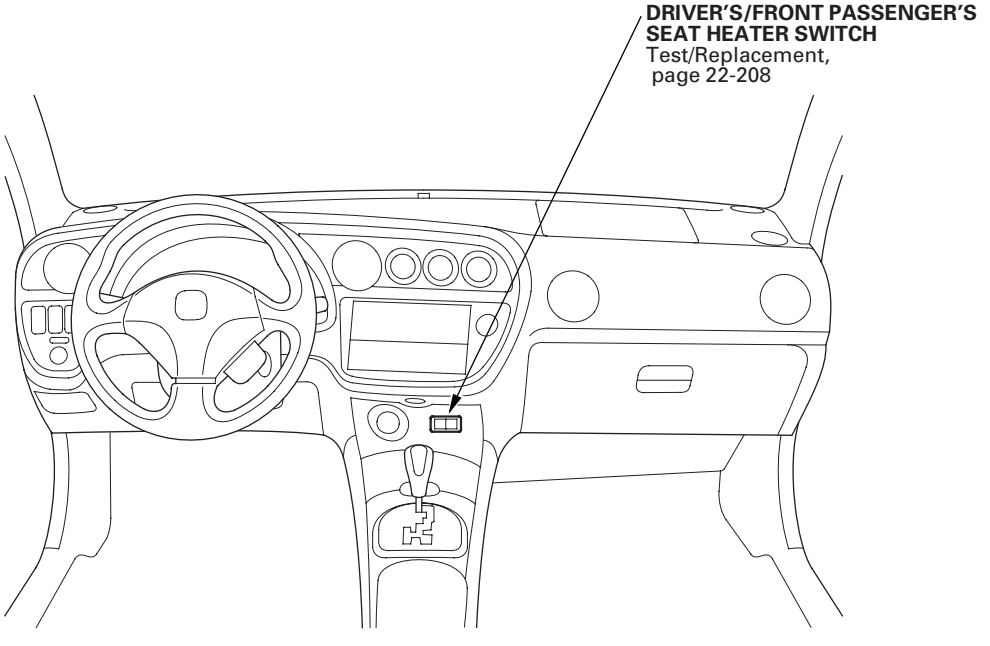

Circuit Diagram

Canada

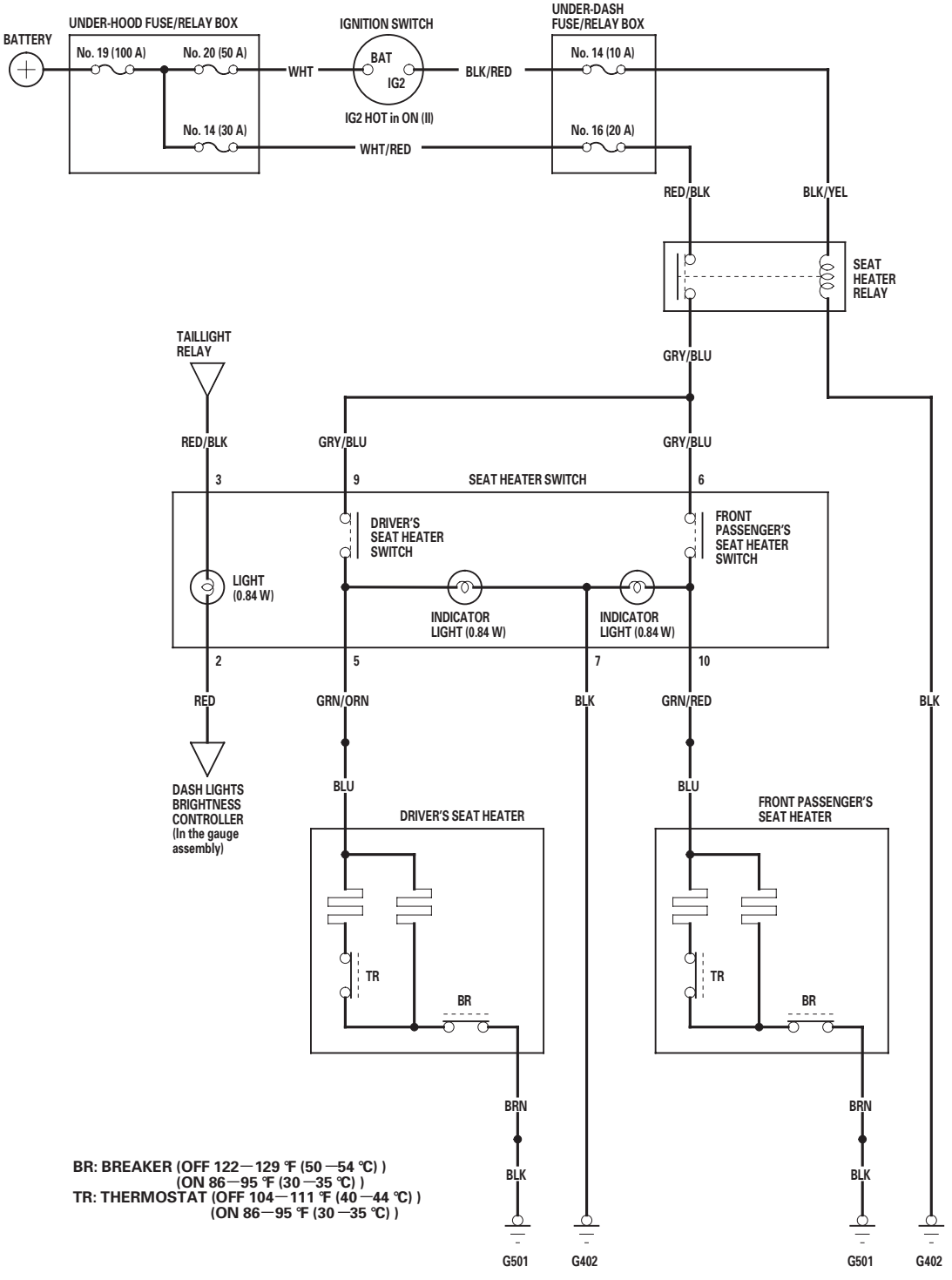

Seat Heater Switch Test/ Replacement

Canada

1. Remove the dashboard center lower cover (see page 20-65).

2. Disconnect the 10P connector (A) from the seat heater switch (B), then remove the switch.

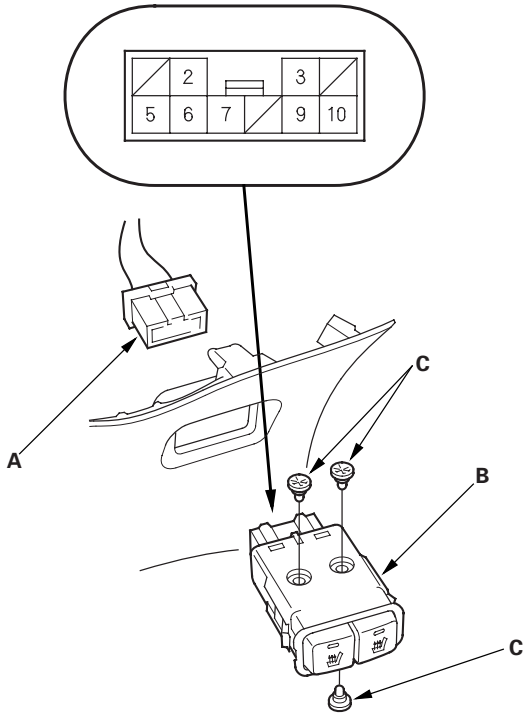

3. Check for continuity in each switch position according to the table.

Position \ Terminal	2		3	5	6		7		9	10
ON	○	⊕	○	○	○	⊕	○	⊕	○	○
OFF	○	⊕	○	○		⊕	○	⊕		○

4. If the check is not as specified, replace the bulb(s) (C) or the switch.

Seat Heater Test

Canada

1. Remove the front seat (see page 20-75).

2. Disconnect the 2P connector (A) from the seat heater.

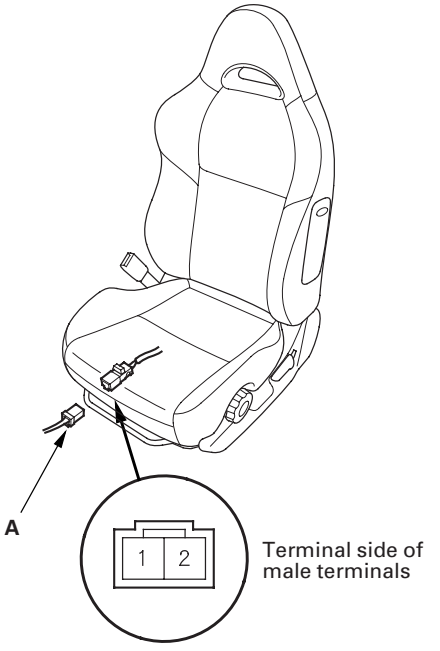

3. The temperature of the seat must be below 122 ℉ (50 ℃). Check for continuity between the No. 1 and No. 2 terminals. There should be continuity.
If there is no continuity, replace the seat cushion (see page 20-77).

Restraints

Restraints

Special Tools 23-2

Seat Belts

Component Location Index 23-3
Front Seat Belt Replacement 23-4
Rear Seat Belt Replacement 23-6
Inspection 23-8
Child Seat Tether Anchor Removal/Installation 23-9

SRS (Supplemental Restraint System)

Component Location Index 23-10
Precautions and Procedures 23-11
General Troubleshooting Information 23-20
DTC Troubleshooting Index 23-25
Symptom Troubleshooting Index 23-27
System Description 23-28
Circuit Diagram 23-30
DTC Troubleshooting 23-32
Symptom Troubleshooting 23-123
Component Replacement/Inspection After Deployment 23-129
Driver's Airbag Replacement 23-130
Front Passenger's Airbag Replacement 23-132
Side Airbag Replacement 23-134
Airbag Disposal 23-135
Cable Reel Replacement 23-138
SRS Unit Replacement 23-141
Side Impact Sensor Replacement 23-142
OPDS Unit Replacement 23-143
Front Impact Sensor Replacement 23-144

Special Tools

Ref. No.	Tool Number	Description	Qty
① *1	07HAZ-SG00500	Deployment Tool	1
②	07PAZ-0010100	SCS Service Connector	1
③	07SAZ-TB4011A	SRS Inflator Simulator	1
④	07TAZ-SZ5011A	SRS Simulator Lead C	1
⑤ *2	07TAZ-001020A	Backprobe Adapter, 17 mm	2
⑥	07XAZ-S1A0200	SRS Simulator Lead E	1
⑦	07XAZ-SZ30100	SRS Simulator Lead F	1
⑧	07YAZ-S3AA100	SRS Simulator Lead H	1

* 1: Included in SRS Tool Set 07MAZ-SM5000B
* 2: Use with the stacking patch cords from T/N 07SAZ-001000A, Backprobe Set.

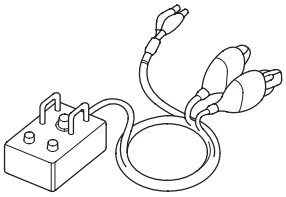

①

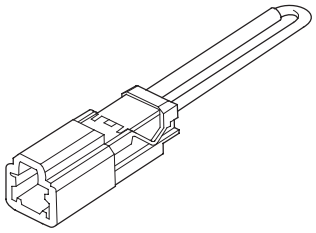

②

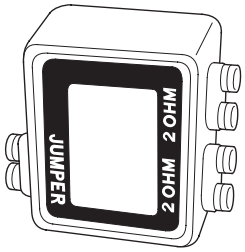

③

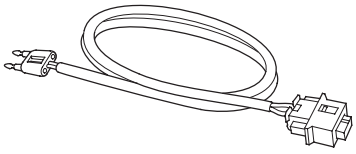

④

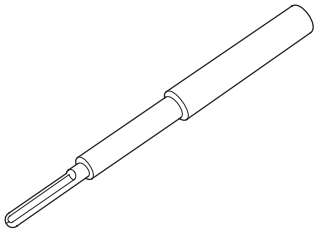

⑤

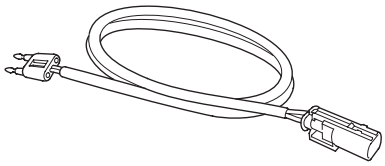

⑥

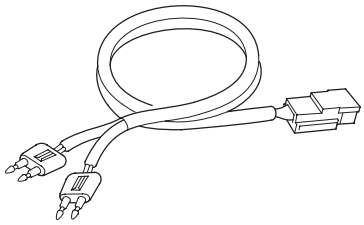

⑦

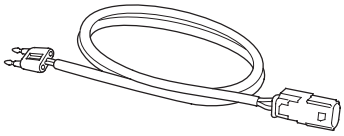

⑧

Component Location Index

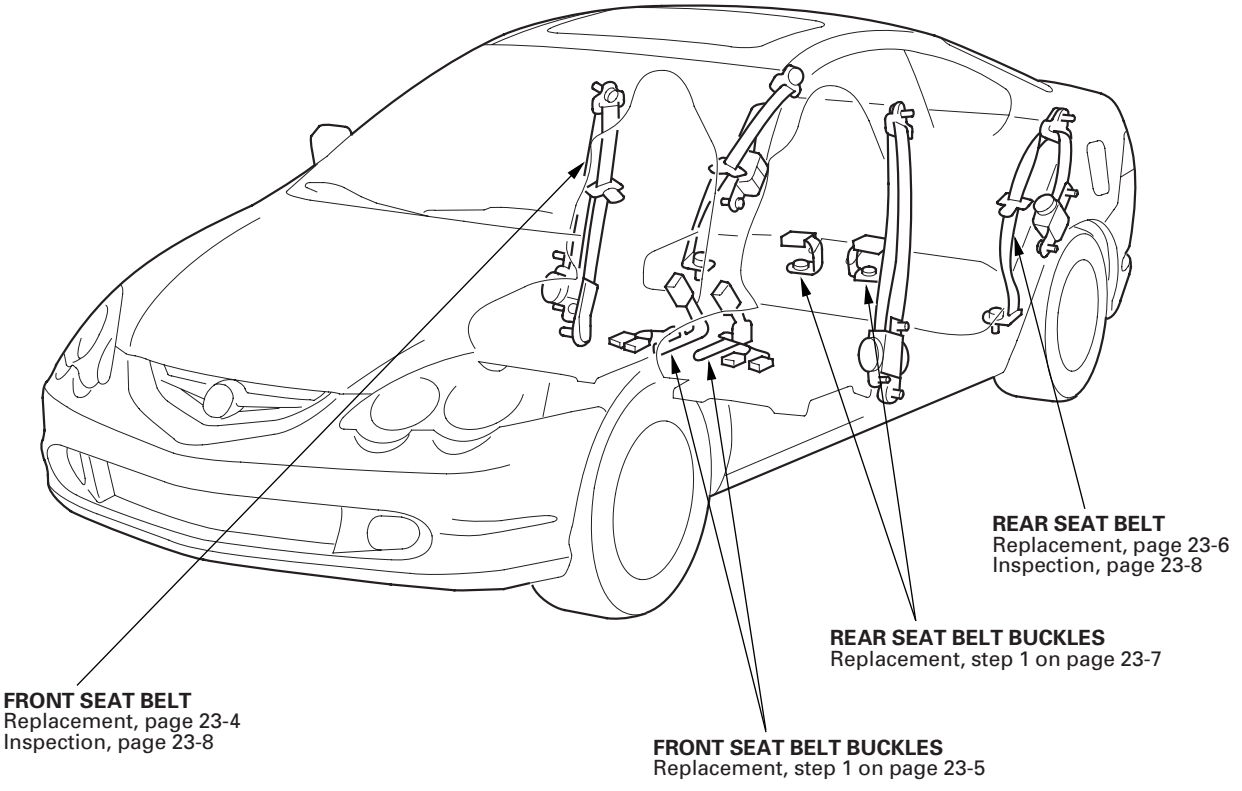

Front Seat Belt Replacement

SRS components are located in this area. Review the SRS component locations (see page 23-10) and the precautions and procedures (see page 23-11) before performing repairs or service.

NOTE: Check the front seat belts for damage, and replace them if necessary.

Front Seat Belt

1. Make sure you have the anti-theft code for the radio, and then write down the frequencies for the preset buttons.

2. Disconnect the negative cable from the battery, and wait at least 3 minutes before beginning work.

3. Slide the front seat forward fully.

4. Remove the rear side trim panel (see page 20-51).

5. Remove the lower anchor cap (A), and remove the lower anchor bolt (B).

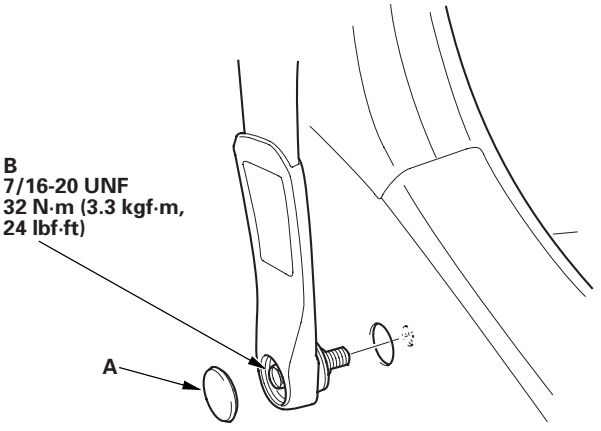

6. Remove the upper anchor cap (A), and remove the upper anchor bolt (B).

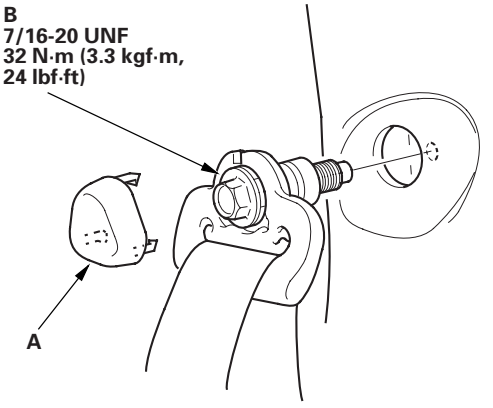

7. Disconnect the seat belt tensioner connector (A). Remove the retractor mounting self-tapping ET screw (B) and the retractor bolt (C), then remove the front seat belt (D) and retractor (E).

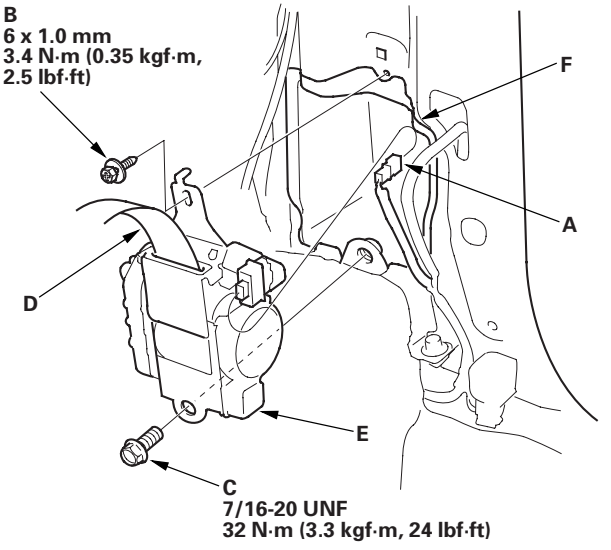

8. If necessary, remove the front seat belt protector (F).

9. Install the belt in the reverse order of removal, and note these items:

   - If the threads on the retractor mounting self-tapping ET screw are worn out, use an oversized self-tapping ET screw (P/N 90133-SZ4-003) made specifically for this application.
   - Apply liquid thread lock to the anchor bolts before reinstallation.
   - Check that the retractor locking mechanism functions (see page 23-8).
   - Assemble the washers, collars, and bushings on the upper and lower anchor bolts as shown.
   - If the seat belt tensioner has been activated, replace the front seat belt protector with a new one.
   - Before installing the anchor bolts, make sure there are no twists or kinks in the seat belt.
   - Make sure the seat belt tensioner connector is plugged in properly.
   - Reconnect the negative cable to the battery.
   - Enter the anti-theft code for the radio, and then enter the customer's radio station presets.
   - Reset the clock.
   - '02-04 models; Do the ECM/PCM idle learn procedure (see page 11-349).
   - Do the power window control unit reset procedure (see page 22-148).

Upper anchor bolt installation

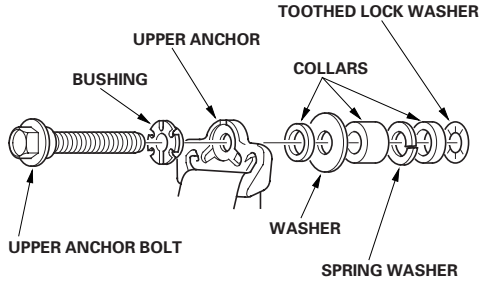

Lower anchor bolt installation

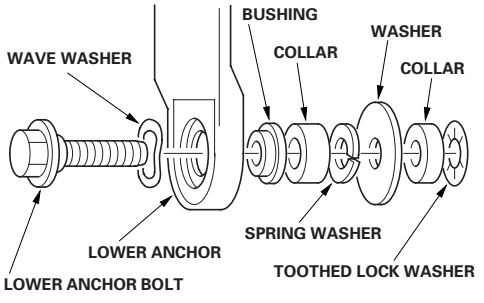

Seat Belt Buckle

1. Make sure you have the anti-theft code for the radio, and then write down the frequencies for the preset buttons.

2. Disconnect the negative cable from the battery, and wait at least 3 minutes before beginning work.

3. Remove the front seat (see page 20-75).

4. On the passenger's seat with BOSE sound system, remove the front stereo amplifier (see page 22-122).

5. Detach the seat belt switch connector clip (A) and seat belt buckle tensioner connector clip (B), and on the passenger's seat with BOSE sound system, disconnect the subharness connector (C) from the seat belt switch connector. Remove the harness band (D) from the seat cushion frame spring (E). The driver's seat and passenger's seat with BOSE sound system are shown, the passenger's seat without BOSE sound system is similar to the driver's seat.

Driver's seat

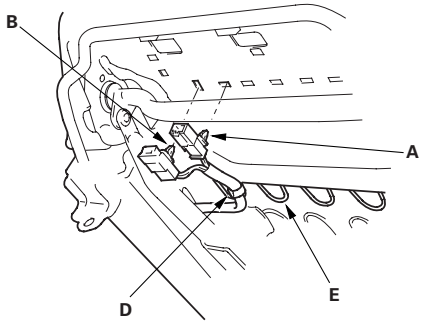

Passenger's seat with BOSE sound system

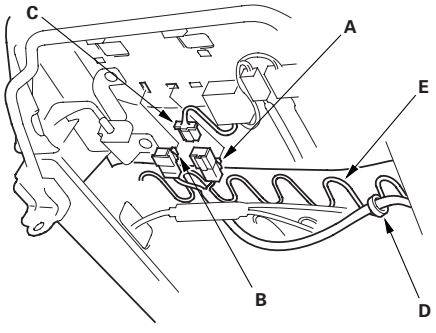

(cont'd)

Front Seat Belt Replacement (cont'd)

6. Remove the center anchor bolt (A), and remove the seat belt buckle (B).

   NOTE: The passenger's seat is shown; the driver's seat is similar.

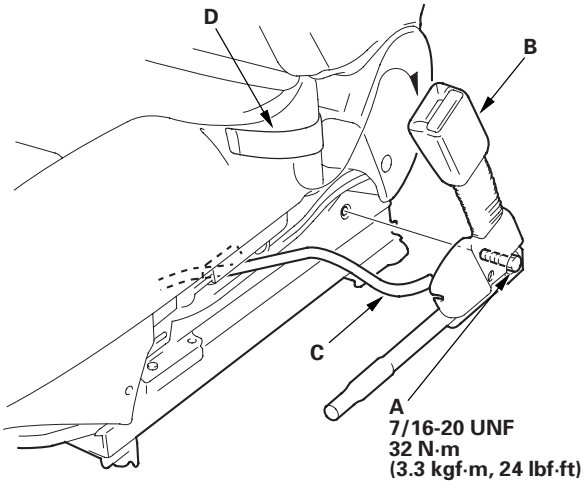

7. Pull the seat belt switch/tensioner harness (C) out through the hole in the seat track, and remove the seat belt buckle from the retainer band (D) (passenger's seat).

8. Install the buckle in the reverse order of removal, and note these items:

   - Apply liquid thread lock to the center anchor bolt before reinstallation.
   - Apply liquid thread lock to the seat mounting bolts before reinstallation.
   - Reconnect the negative cable to the battery.
   - Enter the anti-theft code for the radio, and then enter the customer's radio station presets.
   - Reset the clock.
   - '02-04 models; Do the ECM/PCM idle learn procedure (see page 11-349).
   - Do the power window control unit reset procedure (see page 22-148).

Rear Seat Belt Replacement

NOTE: Check the rear seat belts for damage, and replace them if necessary.

Rear Seat Belt

1. Remove the rear side trim panel (see page 20-51).

2. Remove the lower anchor bolt (A).

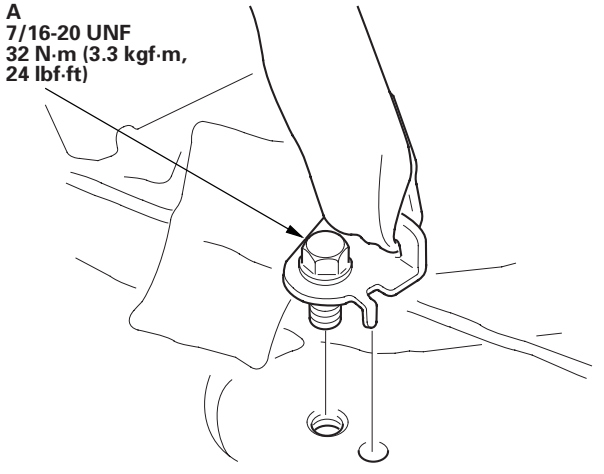

3. Remove the upper anchor cap (A), and remove the upper anchor bolt (B).

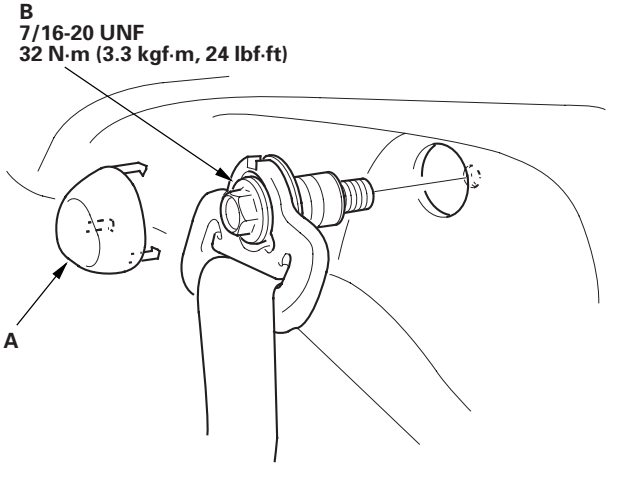

4. Remove the quarter pillar trim as necessary (see page 20-52).

5. Remove the retractor mounting bolt (A) and the retractor bolt (B), then remove the rear seat belt (C) and retractor (D).

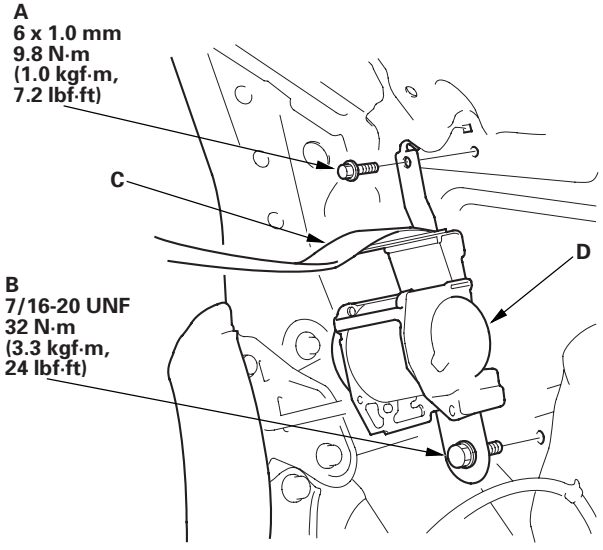

6. Install the belt in the reverse order of removal, and note these items:

   - Apply liquid thread lock to the anchor bolts before reinstallation.
   - Check that the retractor locking mechanism functions as described (see page 23-8).
   - Assemble the washers, collars, and bushing on the upper anchor bolt as shown.
   - Before installing the anchor bolt, make sure there are no twists or kinks in the seat belt.

Upper anchor bolt installation

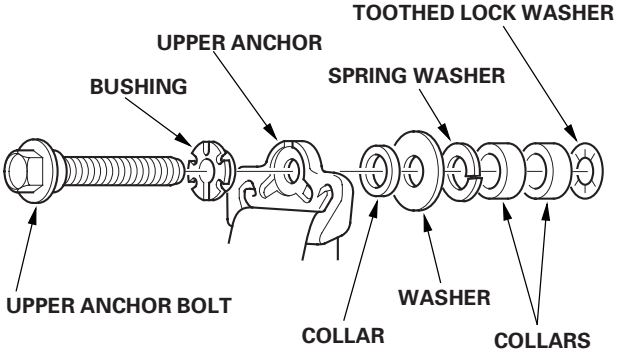

Seat Belt Buckles

1. Remove the rear seat cushion (see page 20-85).

2. Remove the center anchor bolts (A), and remove the seat belt buckles (B).

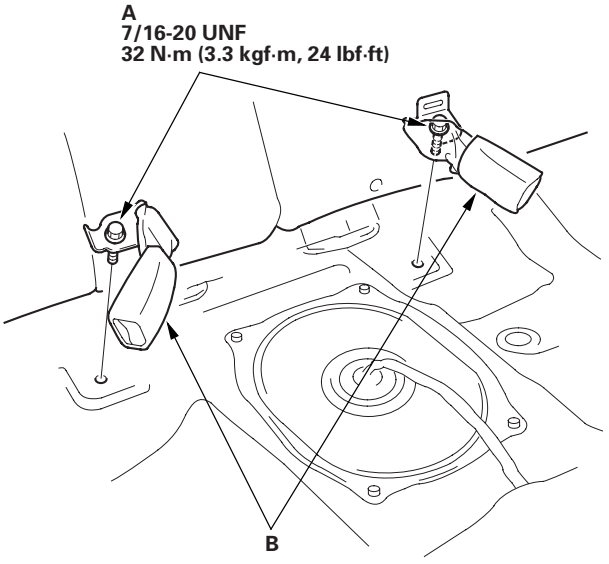

3. Install the buckles in the reverse order of removal, and apply liquid thread lock to the anchor bolts before reinstallation.

Inspection

For front seat belt retractor with seat belt tensioner, review the SRS component locations (see page 23-10) and the precautions and procedures (see page 23-11) before performing repairs or service.

Retractor

1. Before installing the retractor, check that the seat belt can be pulled out freely.

2. Make sure that the seat belt does not lock when the retractor (A) is leaned slowly up to 15 ° from the mounted position. The seat belt should lock when the retractor is leaned over 40 °. Do not attempt to disassemble the retractor.

Front

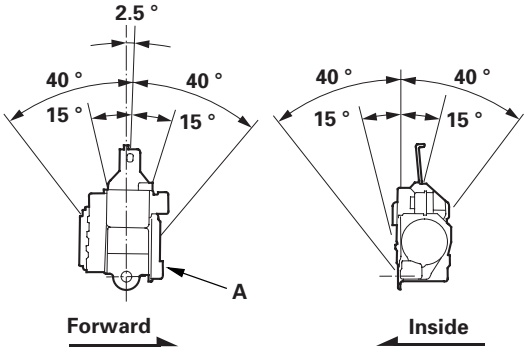

Rear

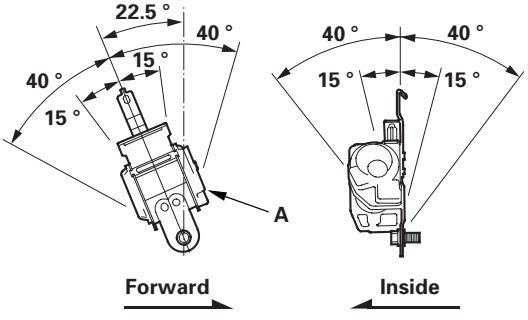

3. Replace the seat belt with a new assembly if there is any abnormality. Do not disassemble any part of the seat belt for any reason.

In-vehicle

1. Check that the seat belt is not twisted or caught on anything.

2. After installing the anchors, check for free movement on the anchor bolts. If necessary, remove the anchor bolts and check that the washers and other parts are not damaged or improperly installed.

3. Check the seat belts for damage or discoloration. Clean with a shop towel if necessary. Use only soap and water to clean.

   NOTE: Dirt buildup in the loops of the upper anchors can cause the seat belts to retract slowly. Wipe the inside of the loops with a clean cloth dampened in isopropyl alcohol.

4. Check that the seat belt does not lock when pulled out slowly. The seat belt is designed to lock only during a sudden stop or impact.

5. Make sure that the seat belt will retract automatically when released.

6. For each passenger's seat belt, check the seat belt retractor locking mechanism ALR (automatic locking retractor). This function is for securing child seats.

   –1 Pull the seat belt all the way out to engage the ALR. The seat belt should retract with a soft, ratcheting sound, but not extend. This is normal.
   –2 To disengage the ALR, release the seat belt and allow it to fully retract, then pull the seat belt out part-way. The seat belt should retract and extend normally.

7. Replace the seat belt with a new assembly if there is any abnormality. Do not disassemble any part of the seat belt for any reason.

Child Seat Tether Anchor Removal/Installation

1. Open the child seat tether anchor cap (A) in the trunk side trim panel (B).

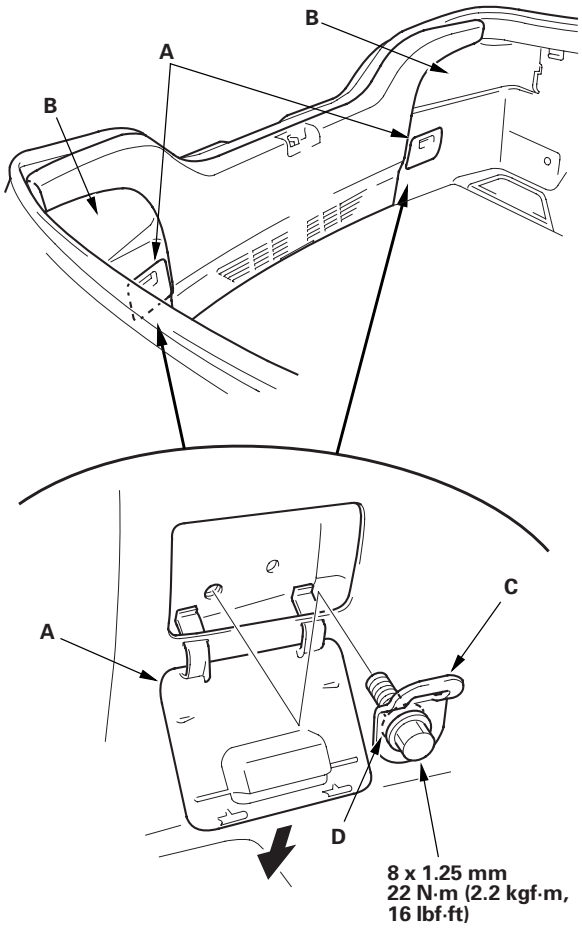

2. Remove the child seat tether anchor (C). Do not remove the toothed washer (D) from the tether anchor.

3. Install the anchor in the reverse order of removal, and apply liquid thread lock to the threads of the anchor bolt(s).

Component Location Index

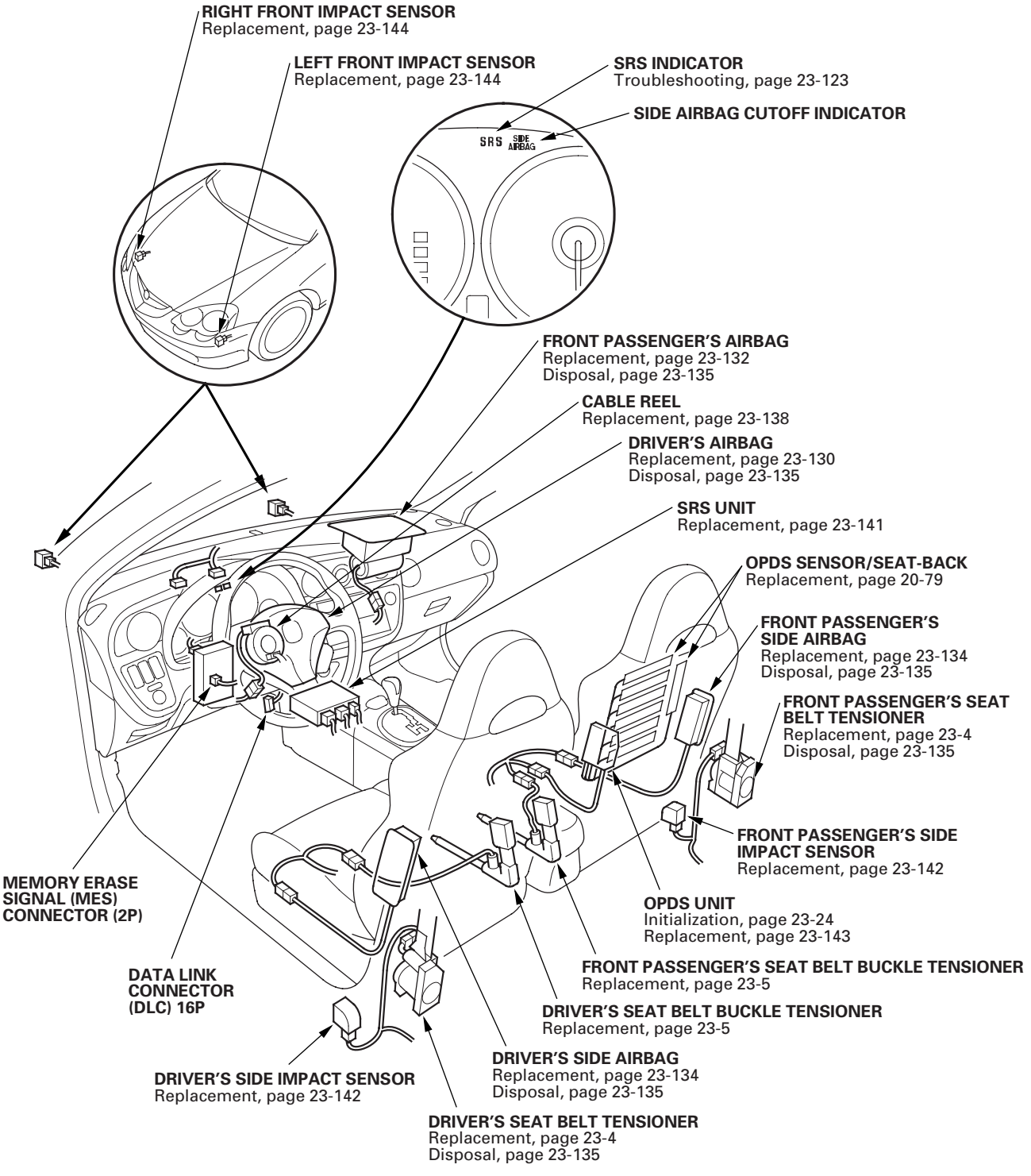

Precautions and Procedures

General Precautions

Please read the following precautions carefully before performing the airbag system service. Observe the instructions described in this manual, or the airbags could accidentally deploy and cause damage or injuries.

- Except when performing electrical inspections, always turn the ignition switch OFF, disconnect the negative cable from the battery, and wait at least 3 minutes before beginning work.
  NOTE: The SRS memory is not erased even if the ignition switch is turned OFF or the battery cables are disconnected from the battery.
- Use replacement parts which are manufactured to the same standards and quality as the original parts. Do not install used SRS parts. Use only new parts when making SRS repairs.
- Carefully inspect any SRS part before you install it. Do not install any part that shows signs of being dropped or improperly handled, such as dents, cracks, or deformation.

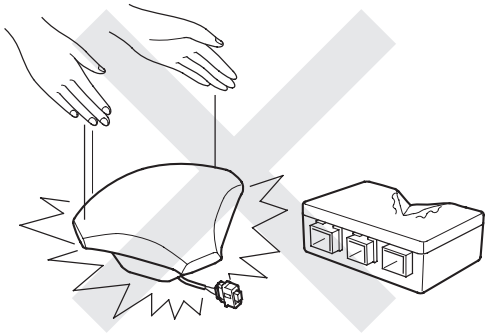

- Before removing any of the SRS parts (including disconnection of the connectors), always disconnect the SRS connector.
- Use only a digital multimeter to check the system. If it is not a Honda multimeter, make sure its output is 10 mA (0.01 A) or less when switched to the lowest value in the ohmmeter range. A tester with a higher output could cause accidental deployment and possible injury.
- Do not put objects on the front passenger's airbag.
- The original radio has a coded theft protection circuit. Be sure to get the customer's radio code and write down the frequencies for the radio's preset stations before disconnecting the battery negative cable.
- Before returning the vehicle to the customer, enter the radio code, then enter the customer's radio station presets, and set the clock. Do the idle learn procedure (see page 11-349).

Steering-related Precautions

Cable Reel Alignment

- Misalignment of the cable reel could cause an open in the wiring, making the SRS system and the horn inoperative. Center the cable reel whenever the following is performed (see step 6 on page 23-140).
  – Installation of the steering wheel
  – Installation of the cable reel
  – Installation of the steering column
  – Other steering-related adjustment or installation
- Do not disassemble the cable reel.
- Do not apply grease to the cable reel.
- If the cable reel shows any signs of damage, replace it with a new one. For example, if it does not rotate smoothly, replace the cable reel.

(cont'd)

Precautions and Procedures (cont'd)

Airbag Handling and Storage

Do not disassemble an airbag. It has no serviceable parts. Once an airbag has been deployed, it cannot be repaired or reused. For temporary storage of the airbag during service, please observe the following precautions.

- Store the removed airbag with the pad surface up. Never put anything on the removed airbag.

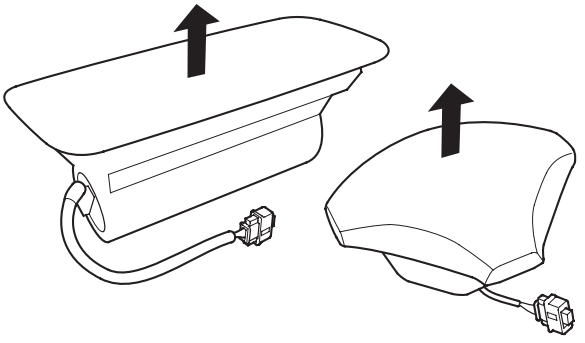

- To prevent damage to the airbag, keep it away from any oil, grease, detergent, or water.

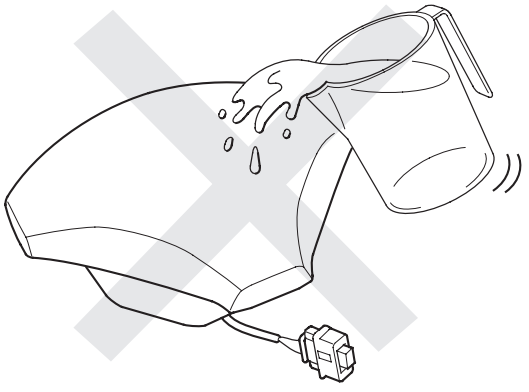

- Store the removed airbag on a secure, flat surface away from any high heat source (exceeding 200 ℉/ 93 ℃).

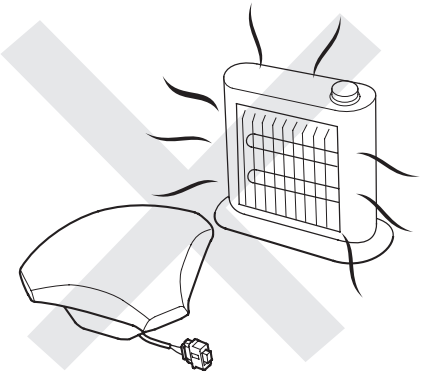

- Never perform electrical inspections to the airbags, such as measuring resistance.
- Do not position yourself in front of the airbag during removal, inspection, or replacement.

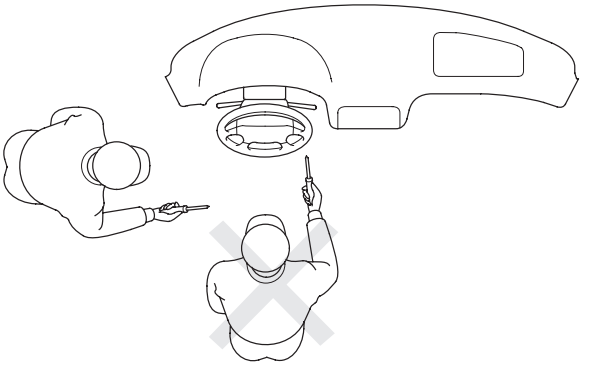

- For proper disposal of a damaged airbag, refer to airbag disposal (see page 23-135).

SRS Unit, Front Sensors, and Side Impact Sensors

- Be careful not to bump or impact the SRS unit, front sensors, or the side impact sensors whenever the ignition switch is ON (II), or for at least 3 minutes after the ignition switch is turned OFF.
- During installation or replacement, be careful not to bump (by impact wrench, hammer, etc.) the area around the SRS unit, front sensors, and side impact sensors. The airbags could accidentally deploy and cause damage or injury.

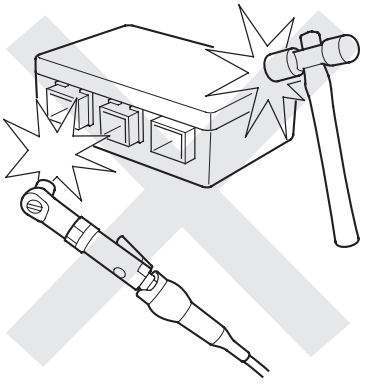

- After a collision in which any airbags or seat belt tensioners were deployed, replace the SRS unit, front sensors, and other related components (see page 23-129). After a collision in which a side airbag was deployed, replace the side impact sensor on the deployed side and the SRS unit. After a collision in which the airbags or the side airbags did not deploy, inspect for any damage or any deformation on the SRS unit, front sensors, and the side impact sensors. If there is any damage, replace the SRS unit and/or the side impact sensors.

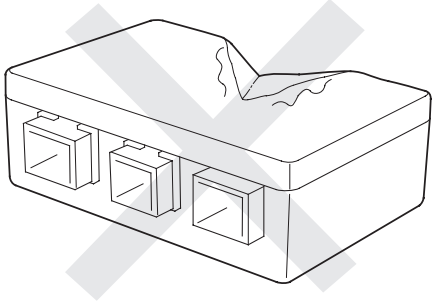

- Do not disassemble the SRS unit, front sensors, or the side impact sensors.
- Turn the ignition switch OFF, disconnect the battery negative cable and wait at least 3 minutes before beginning installation or replacement of the SRS unit, or disconnecting the connectors from the SRS unit.
- Be sure the SRS unit, front sensors, and side impact sensors are installed securely with the mounting bolts torqued to 9.8 N·m (1.0 kgf·m, 7.2 lbf·ft)
- Do not spill water or oil on the SRS unit or the side impact sensors, and keep them away from dust.
- Store the SRS unit and the side impact sensors in a cool (less than 104 ℉/40 ℃) and dry (less than 80 % relative humidity, no moisture) area.

(cont'd)

Precautions and Procedures (cont'd)

Wiring Precautions

Some of the SRS wiring can be identified by a special yellow outer covering, and the SRS connectors can be identified by their yellow color. Observe the instructions.

- Never attempt to modify, splice, or repair SRS wiring. If there is an open or damage in SRS wiring, replace the harness.

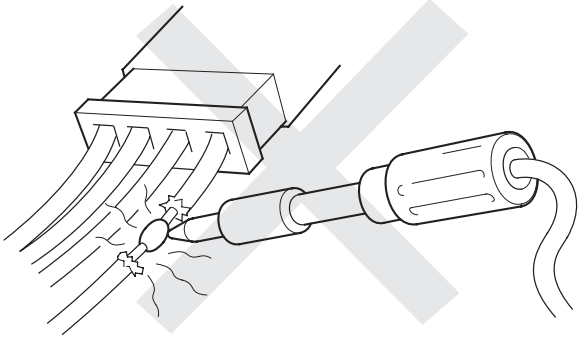

- Be sure to install the harness wires so they do not get pinched or interfere with other parts.

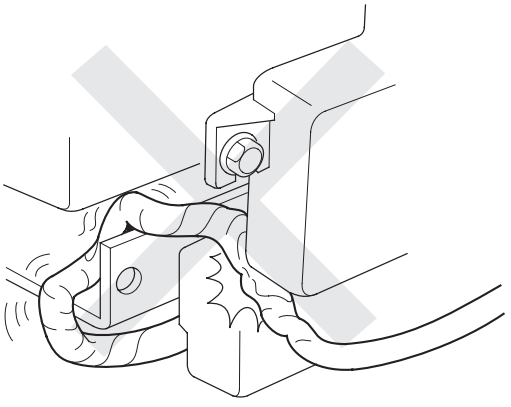

- Make sure all SRS ground locations are clean, and grounds are securely fastened for optimum metal-to-metal contact. Poor grounding can cause intermittent problems that are difficult to diagnose.

Precautions for Electrical Inspections

- When using electrical test equipment, insert the probe of the tester into the wire side of the connector. Do not insert the probe of the tester into the terminal side of the connector, and do not tamper with the connector.

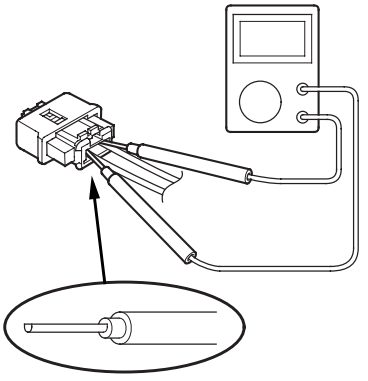

- Use a U-shaped probe. Do not insert the probe forcibly.

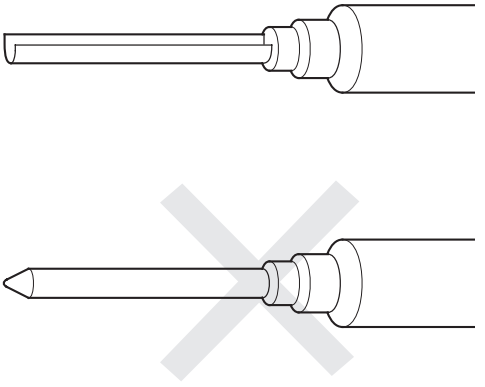

- Use specified service connectors in troubleshooting. Using improper tools could cause an error in inspection due to poor metal-to-metal contact.

Spring-loaded Lock Connector

Some SRS system connectors have a spring-loaded lock.

Front Airbag Connectors

Disconnecting
To release the lock, pull the spring-loaded sleeve (A) toward the stop (B) while holding the opposite half of the connector. Then pull the connector halves apart. Be sure to pull on the sleeve and not on the connector.

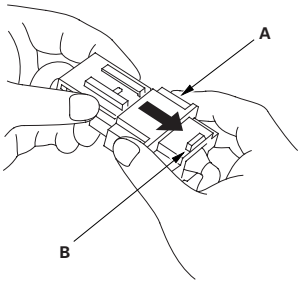

Connecting

1. To reconnect, hold the pawl-side connector, and press on the back of the sleeve-side connector in the direction shown. As the 2 connector halves are pressed together, the sleeve (A) is pushed back by the pawl (C). Do not touch the sleeve.

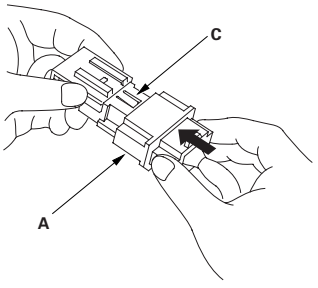

2. When the connector halves are completely connected, the pawl is released, and the spring-loaded sleeve locks the connector.

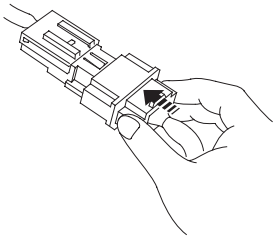

Side Airbag Connector

Disconnecting
To release the lock, pull the spring-loaded sleeve (A) and the slider (B) while holding the opposite half of the connector. Then pull the connector halves apart. Be sure to pull on the sleeve and not on the connector half.

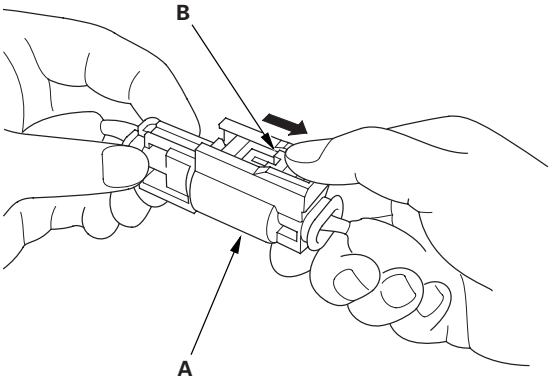

Connecting
Hold both connector halves, and press them firmly together until the projection (C) of the sleeve-side connector clicks.

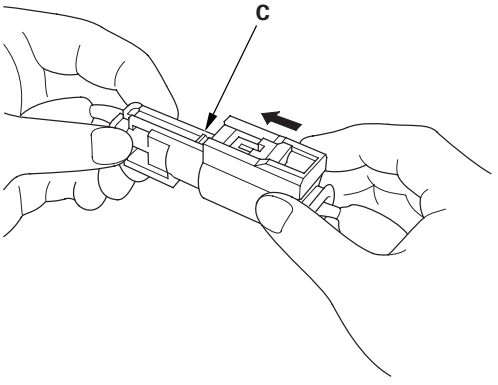

(cont'd)

Precautions and Procedures (cont'd)

Backprobing Spring-loaded Lock Connectors

When checking voltage or resistance on this type of connector the first time, you must remove the retainer to insert the tester probe from the wire side.

NOTE: It is not necessary to reinstall the removed retainer; the terminals will stay locked in the connector housing.

To remove the retainer (A), insert a flat-tip screwdriver (B) between the connector body and the retainer, then carefully pry out the retainer. Take care not to break the connector.

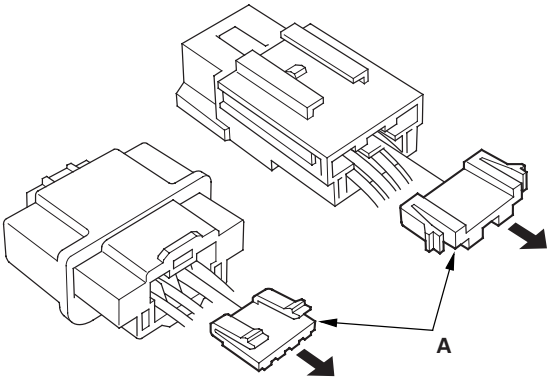

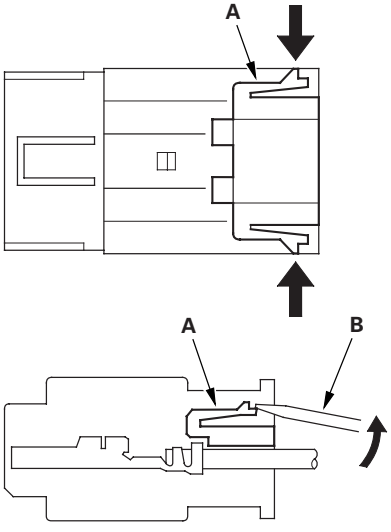

Seats with Side Airbags

Seats with side airbags have a ''SIDE AIRBAG'' label on the seat-back. Because the component parts (seat-back cover, cushion, etc.) of seats with and without airbags are different, make sure you install only the correct replacement parts.

- When cleaning, do not saturate the seat with liquid, and do not spray steam on the seat.
- Do not repair a torn or frayed seat-back cover. Replace the seat-back cover.
- After a collision in which the side airbag was deployed, replace the side airbag with new parts. If the seat-back cushion is split, it must be replaced. If the seat-back frame is deformed, it must be replaced.
- Never put aftermarket accessories on the seat (covers, pads, seat heaters, lights, etc.).

Disconnecting System Connectors

Before removing a front airbag, side airbag, or other SRS related devices (the SRS unit, the cable reel, the front impact sensor, the side impact sensors, the seat belt buckle tensioners, and the seat belt tensioner connector), disconnecting connectors from related devices, or removing the dashboard or the steering column, disconnect the airbag connectors or the side airbag connectors to prevent accidental deployment. Turn the ignition switch OFF and disconnect the negative cable from the battery, and wait at least 3 minutes before beginning the following procedures.

- Before disconnecting SRS unit connector A (18P) from the SRS unit, disconnect the driver's airbag 4P connector (B), the front passenger's airbag 4P connector (D), the left side seat belt tensioner 2P connector (E), and the right side seat belt tensioner 2P connector (F).
- Before disconnecting SRS unit connector B from the SRS unit, disconnect both side airbag 2P connectors (G, H) and both seat belt buckle tensioner 4P connectors (I, J).
- Before disconnecting the cable reel 4P connector (K), disconnect the driver's airbag 4P connector (B).
- Before disconnecting the floor wire harness 4P connector (L), disconnect both seat belt tensioner 2P connectors (E, F).

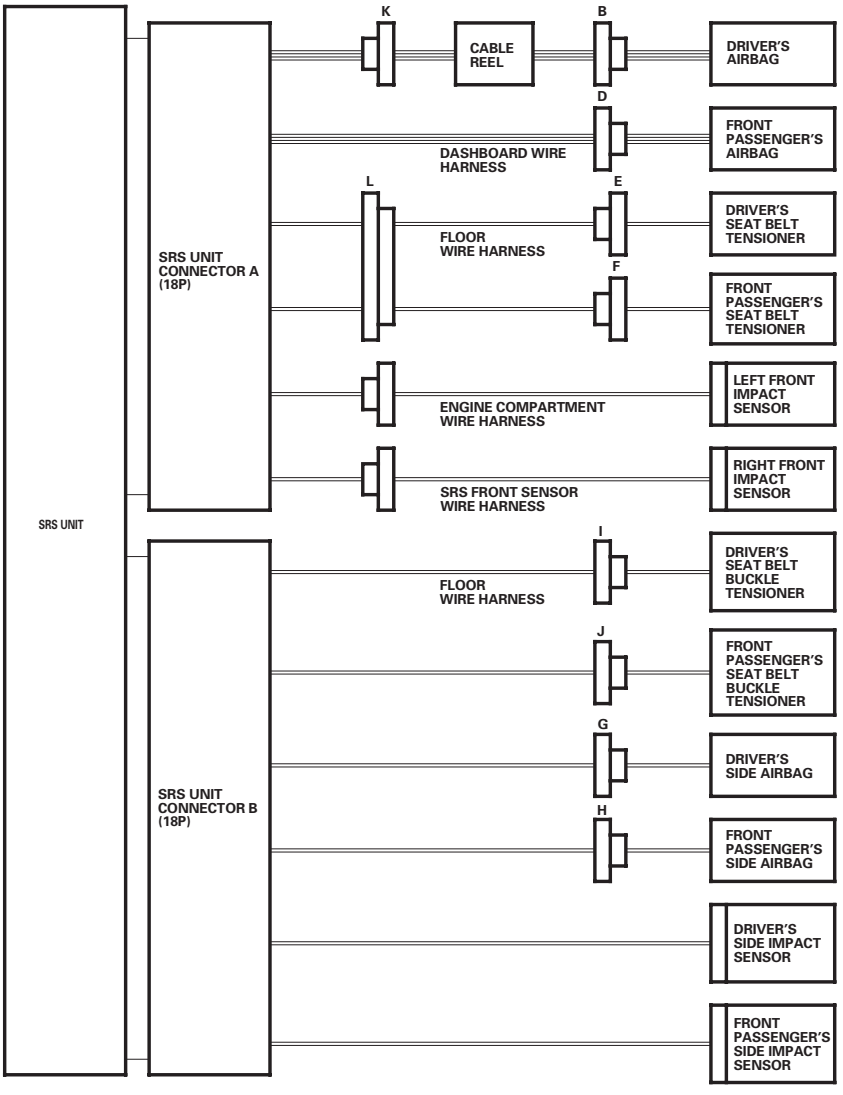

(cont'd)

Precautions and Procedures (cont'd)

1. Disconnect the negative battery cable, and wait at least 3 minutes.

Driver's Airbag

2. Remove the access panel from the steering wheel, then disconnect the driver's airbag 4P connector (A) from the cable reel.

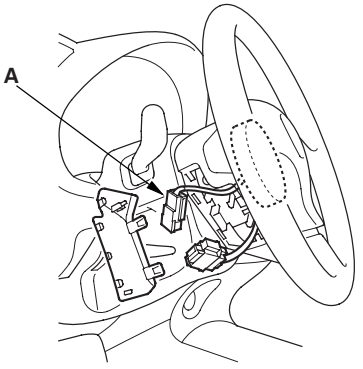

Front Passenger's Airbag

3. Remove the glove box, then disconnect the front passenger's airbag 4P connector (A) from the dashboard wire harness.

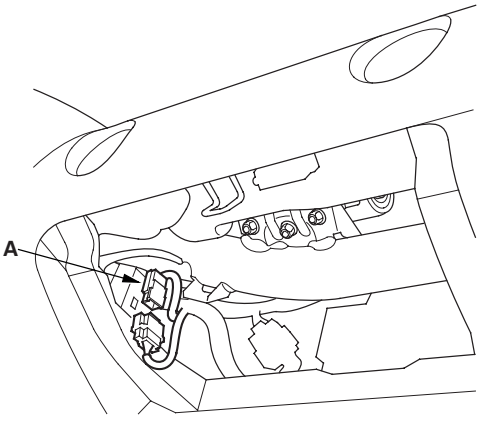

Side Airbag

4. Disconnect both side airbag 2P connectors (A) from the floor wire harness.

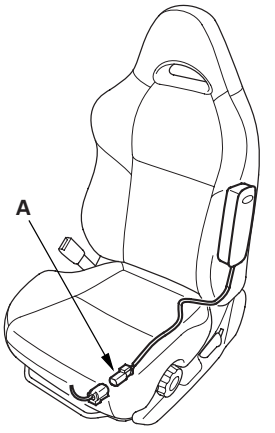

Seat Belt Tensioner

5. Disconnect the floor wire harness 2P connector from both seat belt tensioners.

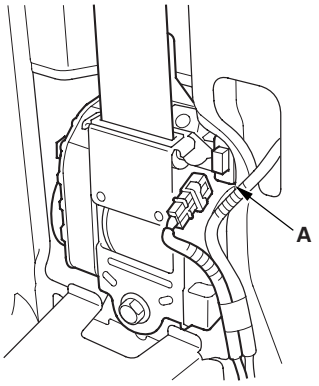

Seat Belt Buckle Tensioner

6. Disconnect both seat belt buckle tensioner 4P connectors (A).

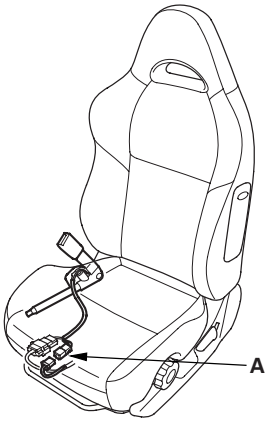

SRS Unit

7. Disconnect SRS unit connector A, and/or SRS unit connector B, and/or SRS unit connector C from the SRS unit.

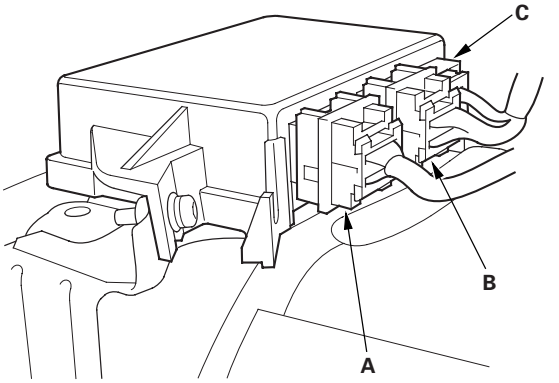

General Troubleshooting Information

DTC (Diagnostic Trouble Codes)

The self-diagnostic function of the SRS system allows it to locate the causes of system problems and then store this information in memory. For easier troubleshooting, this data can be retrieved via a data link circuit.

- When you turn the ignition switch ON (II), the SRS indicator comes on. If it goes off after 6 seconds, the system is normal, and is not currently detecting any abnormality.
- If there is an abnormality, the system locates and defines the problem, stores this information in memory, and turns the SRS indicator on. The data will remain in the memory even when the ignition switch is turned off or if the battery is disconnected.
- The data is stored in memory as a diagnostic trouble code (DTC).
- DTCs are either latching or resetting, depending on the malfunction. With resetting DTCs the SRS indicator will go off the next time the ignition switch is turned ON (II) and the system is normal, but the DTC is still stored. With latching DTCs the SRS indicator will not turn OFF until the malfunction is repaired and the DTC is cleared.
- When you connect the HDS to the 16P data link connector (DLC) to short the SCS terminal, and turn the ignition switch ON (II), the SRS indicator will indicate the diagnostic trouble code (DTC) by the number of blinks.
- When you connect the HDS to the 16P data link connector (DLC), you can retrieve a more detailed DTC in the Honda Systems ''SRS'' menu.
- After reading and recording the DTC, proceed with the troubleshooting procedure for that code.

Precautions

- Make sure the battery is sufficiently charged. If the battery is dead or low, measuring values won't be correct.
- Use only a digital multimeter to check the system. If it's not a Honda multimeter, make sure its output is 10 mA (0.01 A) or less when switched to the smallest value in the ohmmeter range. A tester with a higher output could damage the airbag circuit, or cause accidental airbag deployment and possible injury.
- Whenever the ignition switch is ON (II), or has been turned OFF for less than 3 minutes, be careful not to bump the SRS unit; the airbags could accidentally deploy and cause damage or injuries.
- Before you remove the SRS harness, disconnect the driver's airbag connector, the front passenger's airbag connector, both side airbag connectors, both seat belt buckle tensioner connectors, and both seat belt tensioner connectors.
- Do not touch a tester probe to the terminals in the SRS unit or harness connectors, and do not connect the terminals with a jumper wire. Use only the backprobe set and the HDS. Backprobe spring-loaded lock type connectors correctly.

Reading the DTC

HDS

1. Make sure the ignition switch is OFF.
2. Connect the HDS to the DLC (A).

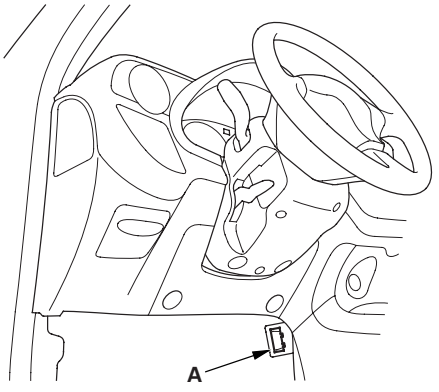

3. Turn the ignition switch ON (II).
4. Use the HDS to check for DTCs.
5. Read and record the DTC.
6. Turn the ignition switch OFF, and wait for 10 seconds.
7. Disconnect the HDS from the DLC.
8. Do the troubleshooting procedure for the DTC.

HDS ''SCS'' Menu Method (retrieving the flash codes)

The SRS indicator (A) indicates the DTC by the number of blinks when the HDS is connected to the DLC (data link connector) (16P) (B).

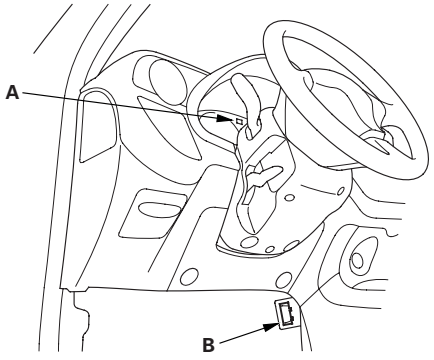

1. Make sure the ignition switch is OFF.
2. Connect the HDS to the DLC (16P), and follow the HDS prompts in the ''SCS'' menu.
3. Make sure the SCS line is grounded, then turn the ignition switch ON (II). The SRS indicator comes on for about 6 seconds, and then goes off. Then it will blink to indicate the DTCs.
4. Read the DTC.
5. Turn the ignition switch OFF, and wait for 10 seconds.
6. Disconnect the HDS from the DLC (16P).
7. Proceed with the troubleshooting procedure for the DTC.

Patterns of DTC Indications

The DTC consists of a main code and sub code.

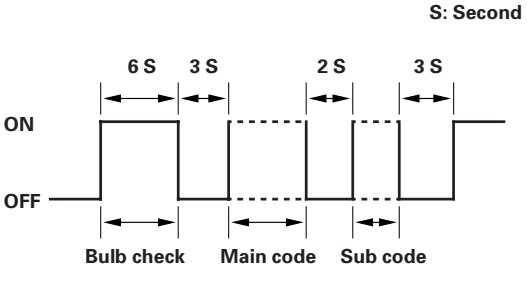

Reading the main code

In case of 1～10
Count the number of blinks.

Example

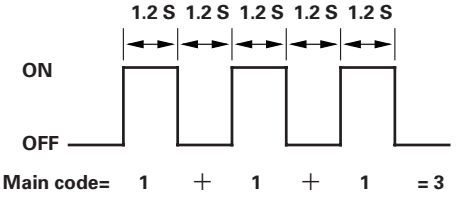

In case of 11～15
Four fast blinks count as 10.
Add any further blinks together as shown.

Example

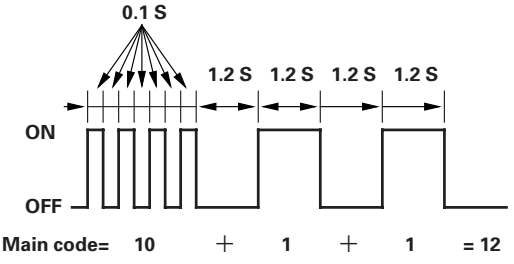

In case of 20 or more
Two sets of four continuous blinks count as 20.
Add any further blinks together as shown.

Example

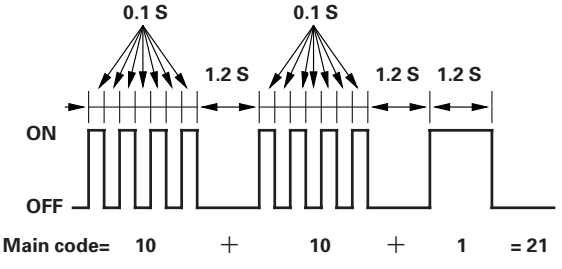

Reading the sub code

Count the number of blinks.

Example

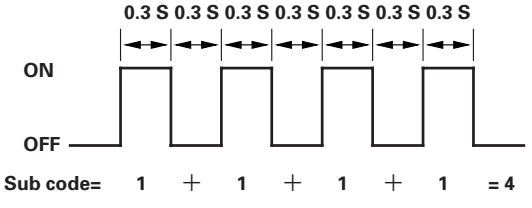

If the main code is '3', and the sub code is '4', record a DTC 3-4.

(cont'd)

General Troubleshooting Information (cont'd)

- Including the most recent problem, up to three different DTCs can be indicated (see example 1).
- In case of a continuous failure, the DTC will be indicated repeatedly (see example 1).
- In case of an intermittent failure, the SRS indicator will indicate the DTCs one time, then it will stay on (see example 2).
- If both a continuous and an intermittent failure occur, both DTCs will be indicated as continuous failures.
- When the system is normal (no DTC), the SRS indicator will stay on (see example 3).
- If the SRS indicator comes on continuously without a DTC, there may be a problem with the system.
- If the SRS indicator does not come on as indicated above, always check for an open or a short to ground in the SCS circuit before troubleshooting the system.

Examples of DTC indications

1. Continuous failure, SRS Indicator blinks like this:

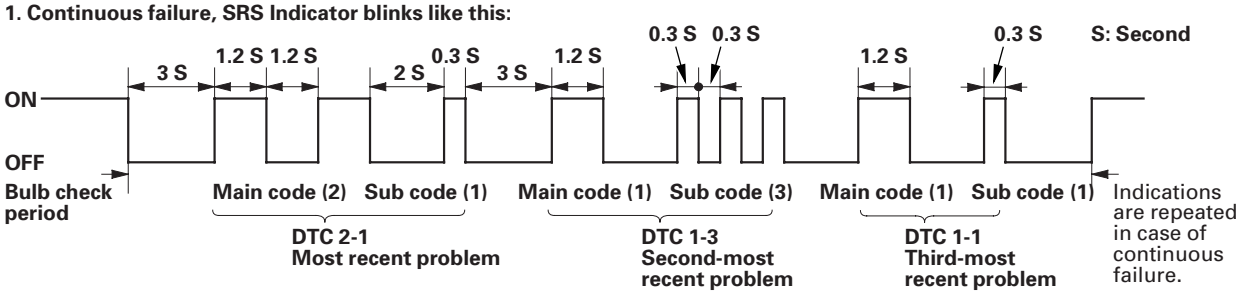

2. Intermittent failure, SRS Indicator blinks like this:

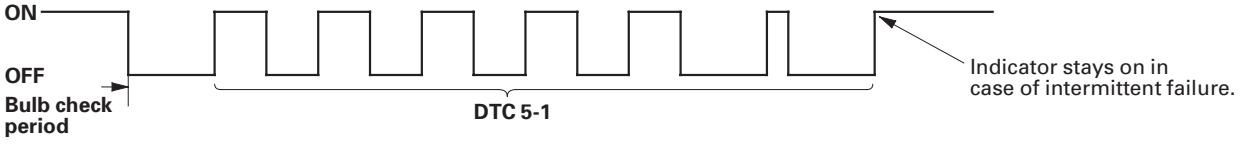

3. Normal (no failure, SRS Indicator blinks like this:

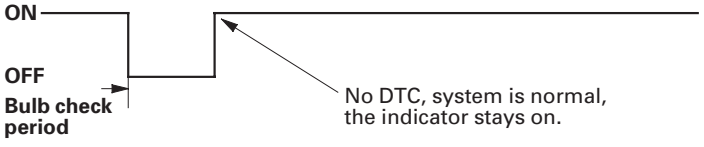

Erasing the DTC Memory with HDS

1. Make sure the ignition switch is OFF.

2. Connect the HDS to the DLC (A).

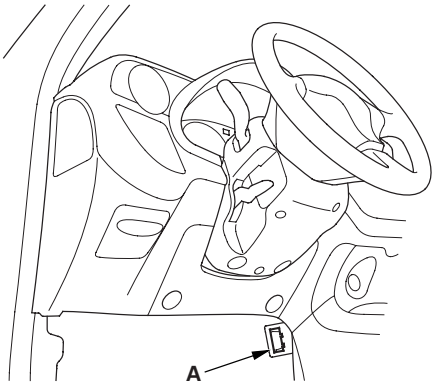

3. Turn the ignition switch ON (II).

4. In the TEST MODE MENU of the HDS, select DTC CLEAR. This erases the DTC(s).

5. Turn the ignition switch OFF, and wait for 10 seconds.

6. Disconnect the HDS from the DLC.

Erasing the DTC Memory with Manual Mode

Special Tools Required
SCS service connector 07PAZ-0010100

To erase the DTC(s) from the SRS unit, follow this procedure.

1. Make sure the ignition switch is OFF.

2. Connect the SCS service connector (A) to the MES connector (2P) (B). Do not use a jumper wire.

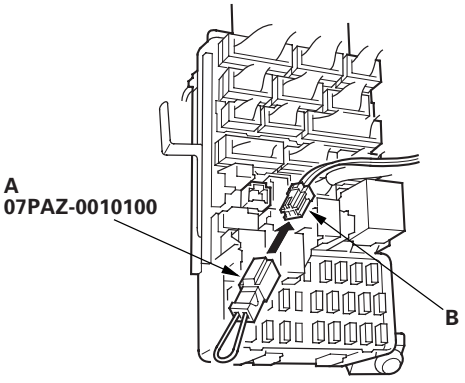

3. Turn the ignition switch ON (II).

4. The SRS indicator will come on for about 6 seconds, and then go off. Remove the SCS service connector from the MES connector (2P) within 4 seconds after the indicator goes off.

5. The SRS indicator will come on again. Reconnect the SCS service connector to the MES connector (2P) within 4 seconds after the indicator comes on.

6. When the SRS indicator goes off, remove the SCS service connector from the MES connector (2P) within 4 seconds.

7. The SRS indicator will blink two times indicating that the memory has been erased.

8. Turn the ignition switch OFF, and wait for 10 seconds.

9. Turn the ignition switch ON (II) again after the procedure. If the SRS indicator comes on for 6 seconds, and then goes off, the system is OK.

(cont'd)

General Troubleshooting Information (cont'd)

Initializing the OPDS (Occupant Position Detection System) Unit

When a seat-back cover, seat-back cushion, and/or OPDS unit is replaced, initialize the OPDS by following the procedure.

NOTE: A new (uninitialized) OPDS unit installed with a faulty OPDS sensor can cause DTC 15-1.

1. Erase the DTC memory (see ''Erasing the DTC Memory'').
2. Make sure the front passenger's seat is dry. Set the seat-back in a normal position, and make sure there is nothing on the seat.
3. Make sure the ignition switch is OFF and the MES connector is not shorted.
4. Connect the HDS to the DLC (A).

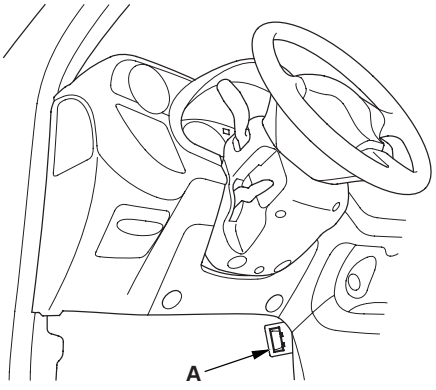

5. Turn the ignition switch ON (II).
6. From the HDS Main Menu, select SRS, then Misc Test, then adjustments. In the Adjustment Menu, select OPDS INIT. Follow the screen prompts to initialize the OPDS.
7. Turn the ignition switch OFF.
8. Disconnect the HDS from the DLC.

   NOTE: If the OPDS system fails to initialize after several attempts, replace the OPDS sensor and retry. If the OPDS system continues to fail to initialize, replace the OPDS unit.

Troubleshooting Intermittent Failures

If there was a malfunction, but it doesn't recur, it will be stored in the memory as an intermittent failure, and the SRS indicator comes on.

After checking the DTC, troubleshoot as follows:

1. Read the DTC (see ''Reading the DTC'').
2. Erase the DTC memory (see ''Erasing the DTC Memory'').
3. Set the parking brake, start the engine, and let it idle.
4. The SRS indicator will come on for about 6 seconds and then go off.
5. Shake the wire harness and the connectors, take a test-drive (quick acceleration, quick braking, cornering), turn the steering wheel fully left and right, and hold it there for 5 to 10 seconds. If the problem recurs, the SRS indicator will come on.
6. If you can't duplicate the intermittent failure, the system is OK at this time.

DTC Troubleshooting Index

DTC	Detection Item	Notes
1-1	Open or increased resistance in driver's airbag inflator	(see page 23-32)
1-3	Short to another wire or decreased resistance in driver's airbag inflator	(see page 23-34)
1-4	Short to power in driver's airbag inflator	(see page 23-36)
1-5	Short to ground in driver's airbag inflator	(see page 23-38)
2-1	Open or increased resistance in front passenger's airbag inflator	(see page 23-40)
2-3	Short to another wire or decreased resistance in front passenger's airbag inflator	(see page 23-41)
2-4	Short to power in front passenger's airbag inflator	(see page 23-43)
2-5	Short to ground in front passenger's airbag inflator	(see page 23-44)
3-1	Open or increased resistance in driver's seat belt tensioner	(see page 23-46)
3-3	Short to another wire or decreased resistance in driver's seat belt tensioner	(see page 23-48)
3-4	Short to power in driver's seat belt tensioner	(see page 23-50)
3-5	Short to ground in driver's seat belt tensioner	(see page 23-52)
21-1	Open or increased resistance in driver's seat belt buckle tensioner	(see page 23-54)
21-3	Short to another wire or decreased resistance in driver's seat belt buckle tensioner	(see page 23-55)
21-4	Short to power in front driver's seat belt buckle tensioner	(see page 23-57)
21-5	Short to ground in front driver's seat belt buckle tensioner	(see page 23-58)
4-1	Open or increased resistance in front passenger's seat belt tensioner	(see page 23-60)
4-3	Short to another wire or decreased resistance in front passenger's seat belt tensioner	(see page 23-62)
4-4	Short to power in front passenger's seat belt tensioner	(see page 23-64)
4-5	Short to ground in front passenger's seat belt tensioner	(see page 23-66)
22-1	Open or increased resistance in front passenger's seat belt buckle tensioner	(see page 23-68)
22-3	Short to another wire or decreased resistance in front passenger's seat belt buckle tensioner	(see page 23-69)
22-4	Short to power in front passenger's seat belt buckle tensioner	(see page 23-71)
22-5	Short to ground in front passenger's seat belt buckle tensioner	(see page 23-72)
5-1	Internal failure of SRS unit NOTE: Before troubleshooting DTCs 5-1 through 8-6, check battery/system voltage. If voltage is low, repair the charging system or replace the battery before troubleshooting the SRS system.	(see page 23-74)
5-2		
5-4		
5-8		
6-3		
6-4		
6-7		
6-8		
7-1		
7-2		
7-3		
8-1		
8-2		
8-3		
8-4		
8-5		
8-6		
8-7		
8-8		

(cont'd)

DTC Troubleshooting Index (cont'd)

DTC	Detection Item	Notes
9-1	Internal failure of the SRS unit. If intermittent, it could mean internal failure of the unit or a faulty indicator circuit. Refer to Troubleshooting Intermittent Failures (see page 23-24). NOTE: Before troubleshooting DTC 9-1 or 9-2, check battery/system voltage. If the voltage is low, repair the charging system or replace the battery before troubleshooting the SRS.	(see page 23-75)
9-2	Internal failure of the SRS unit. If intermittent, it could mean internal failure of the power supply (VB line). Refer to Troubleshooting Intermittent Failures (see page 23-24). NOTE: Before troubleshooting DTC 9-1 or 9-2, check battery/system voltage. If the voltage is low, repair the charging system or replace the battery before troubleshooting the SRS.	(see page 23-77)
9-3	Faulty driver's seat belt buckle switch	(see page 23-80)
9-4	Faulty front passenger's seat belt buckle switch	(see page 23-83)
9-6	Faulty left front impact sensor	(see page 23-86)
9-7	Faulty right front impact sensor	(see page 23-89)
10-1	Seat belt and seat belt buckle tensioners (and/or airbag(s)) deployed	(see page 23-74)
10-2	Driver's side airbag deployed	
10-3	Seat belt and seat-belt buckle tensioners (and/or airbag(s)) and driver's side airbag deployed	
10-4	Front passenger's side airbag deployed	
10-5	Seat belt and seat-belt buckle tensioners (and/or airbag(s)) and front passenger's side airbag deployed	
10-6	Driver's and front passenger's side airbags deployed	
10-7	Seat belt and seat-belt buckle tensioners (and/or airbag(s)) and driver's and front passenger's side airbags deployed	
11-1	Open or increased resistance in driver's side airbag inflator	(see page 23-92)
11-3	Short to another wire or decreased resistance in driver's side airbag inflator	(see page 23-93)
11-4	Short to power in driver's side airbag inflator	(see page 23-95)
11-5	Short to ground in driver's side airbag inflator	(see page 23-96)
12-1	Open or increased resistance in front passenger's side airbag inflator	(see page 23-98)
12-3	Short to another wire or decreased resistance in front passenger's side airbag inflator	(see page 23-99)
12-4	Short to power in front passenger's side airbag inflator	(see page 23-101)
12-5	Short to ground in front passenger's side airbag inflator	(see page 23-102)
13-1	Internal failure of the driver's side impact sensor	(see page 23-79)
13-2		
13-3	No signal from the driver's side impact sensor	(see page 23-104)
13-4	Faulty power supply to the driver's side impact sensor	(see page 23-105)
14-1	Internal failure of the front passenger's side impact sensor	(see page 23-79)
14-2		
14-3	No signal from the front passenger's side impact sensor	(see page 23-107)
14-4	Faulty power supply to the front passenger's side impact sensor	(see page 23-108)
15-1	Faulty OPDS unit or OPDS system not initialized	(see page 23-110)
15-2	Faulty side airbag cut-off indicator circuit	(see page 23-114)
15-3	Faulty OPDS sensor	(see page 23-122)

Symptom Troubleshooting Index

Symptom	Diagnostic procedure	Also check for
SRS indicator does not come on	Symptom Troubleshooting (see page 23-123)	
SRS indicator stays on, but no DTCs are stored	Symptom Troubleshooting (see page 23-127)	Inability to retrieve DTCs with the HDS. Retrieve the flash codes using the SCS menu method (see page 23-21).
Side airbag cutoff indicator stays on after bulb check, and no DTCs are stored, or side airbag cutoff indicator is flashing	• Make sure nothing is on the front passenger's seat. • If the side airbag cutoff indicator stays on after the ignition switch is turned ON (II), initialize the OPDS unit (see page 23-24). – If the side airbag cutoff indicator operates normally, the system is OK. – If the side airbag cutoff indicator stays on or flashes, replace the OPDS sensor/seat-back (see page 20-79). The sensor is part of the seatback pad.	DTC 15-2 troubleshooting

System Description

SRS Components

Airbags
The SRS is a safety device which, when used with the seat belt, is designed to help protect the driver and front passenger in a frontal impact exceeding a certain set limit. The system consists of the SRS unit, including safing sensor and impact sensor (A), the cable reel (B), the driver's airbag (C), the front passenger's airbag (D), side airbags (E), seat belt tensioners (I), and front impact sensors (J). Since the driver's and front passenger's airbags use the same sensors, both normally inflate at the same time. However, it is possible for only one airbag to inflate. This can occur when the severity of a collision is at the margin, or threshold, that determines whether or not the airbags will deploy. In such cases, the seat belt will provide sufficient protection, and the supplemental protection offered by the airbag would be minimal.

Side Airbags
The side airbags (E) are in each front seat-back. They help protect the upper torso of the driver or front seat passenger during a moderate to severe side impact. Side impact sensors (F) in each door sill and in the SRS unit detect such an impact and instantly inflate the driver's or the passenger's side airbag. Only one side airbag will deploy during a side impact. If the impact is on the passenger's side, the passenger's side airbag will deploy even if there is no passenger.

Seat Belt and Seat Belt Buckle Tensioners
The seat belt and seat belt buckle tensioners are linked with the SRS airbags to further increase the effectiveness of the seat belt. In a front-end collision, the tensioners instantly retract the belt and buckle firmly to secure the occupants in their seats.

OPDS
The side airbag system also includes an occupant position detection system (OPDS). This system consists of sensors (G) and a OPDS unit (H) in the front passenger's seat-back. The OPDS unit sends occupant height and position data to the SRS unit. If the SRS unit determines that the front passenger is of small stature (for example, a child) and the front passenger is leaning into the side airbag deployment path, the SRS unit will automatically disable the passenger's airbag. The SRS unit will also disable the airbag when the OPDS detects certain objects on the seat. When the side airbag is disabled, the side airbag cutoff indicator on the instrument panel alerts the driver that the passenger's side airbag will not deploy in a side impact. When the object is removed, or the passenger sits upright, the side airbag cutoff indicator will go off after a few seconds, alerting the driver that the side airbag will deploy in a side impact.

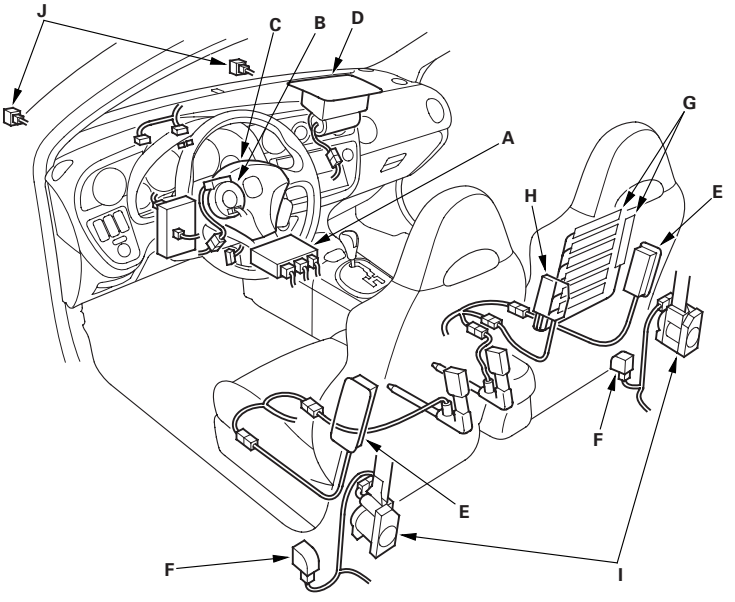

SRS Operation

The main circuit in the SRS unit senses and judges the force of impact and, if necessary, ignites the inflator charges. If battery voltage is too low or power is disconnected due to the impact, the voltage regulator and the back-up power circuit, respectively, will keep voltage at a constant level.

For the SRS to operate

Driver's and Front Passenger's Airbag(s)

(1) A front impact sensor must activate, and send electric signals to the microprocessor.
(2) The microprocessor must compute the signals, and depending on the severity of the collision and whether the seat belt is buckled or unbuckled, it sends the appropriate signals to the airbag inflator(s).
(3) The inflators that received signals must ignite and deploy the airbags.

Side Airbag(s)

(1) A side impact sensor must activate, and send electric signals to the microprocessor.
(2) The microprocessor must compute the signals and send them to the side airbag inflator(s). However, the microprocessor cuts off the signals to the front passenger's side airbag if the SRS unit determines that the front passenger's head is in the deployment path of the side airbag.
(3) The inflator that received the signal must ignite and deploy the side airbag.

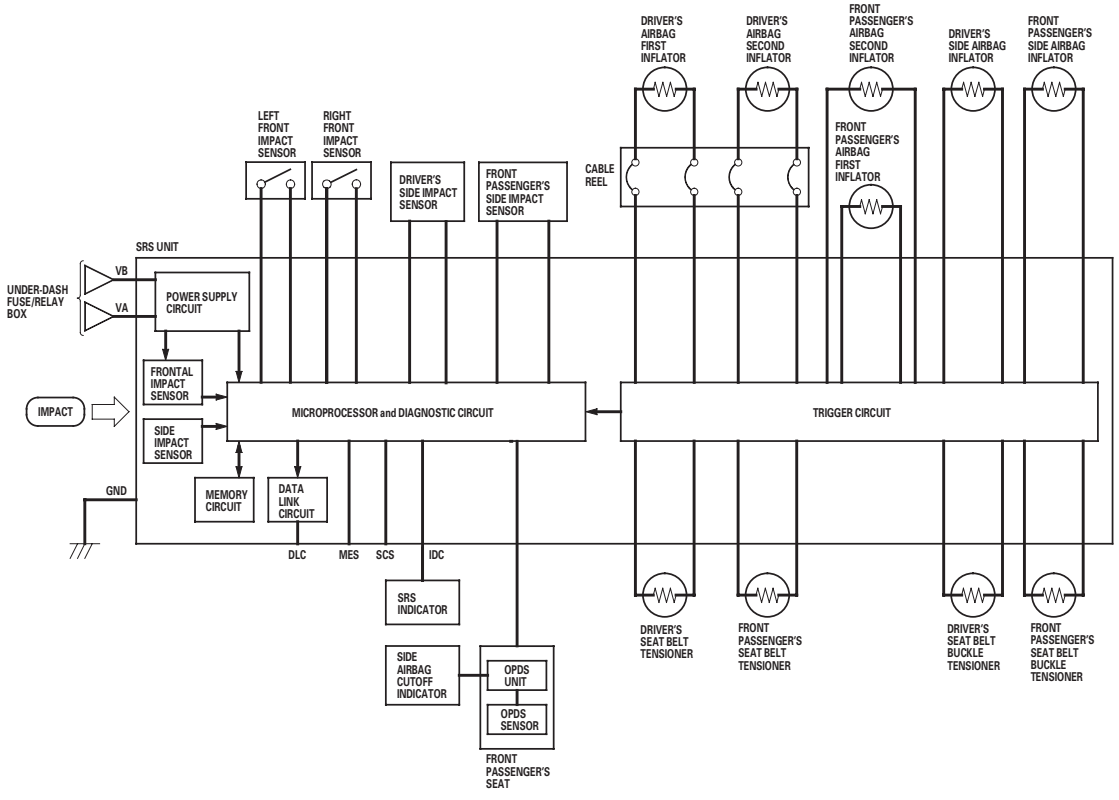

Self-diagnosis System

A self-diagnosis circuit is built into the SRS unit; if the SRS is operating normally, when the ignition switch is turned ON (II), the SRS indicator comes on and goes off after about 6 seconds. If the indicator does not come on, or does not go off after 6 seconds, or if it comes on while driving, it indicates an abnormality in the SRS. The SRS must be inspected and repaired as soon as possible. For better serviceability, the SRS unit memory stores a DTC that relates to the cause of the malfunction, and the unit is connected to the data link connector (DLC). This information can be read with the HDS when it is connected to the DLC (16P) (see page 23-20).

Circuit Diagram

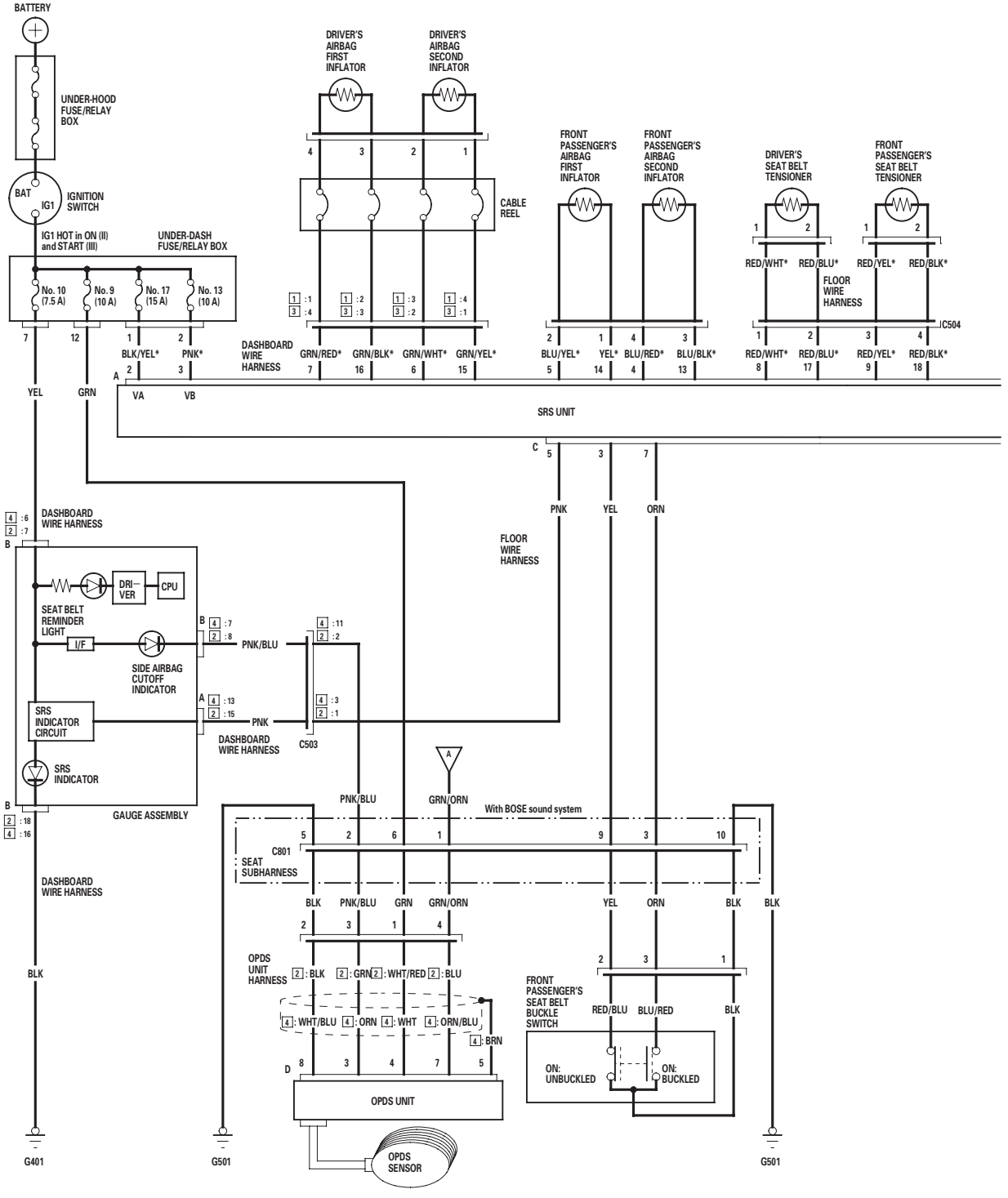

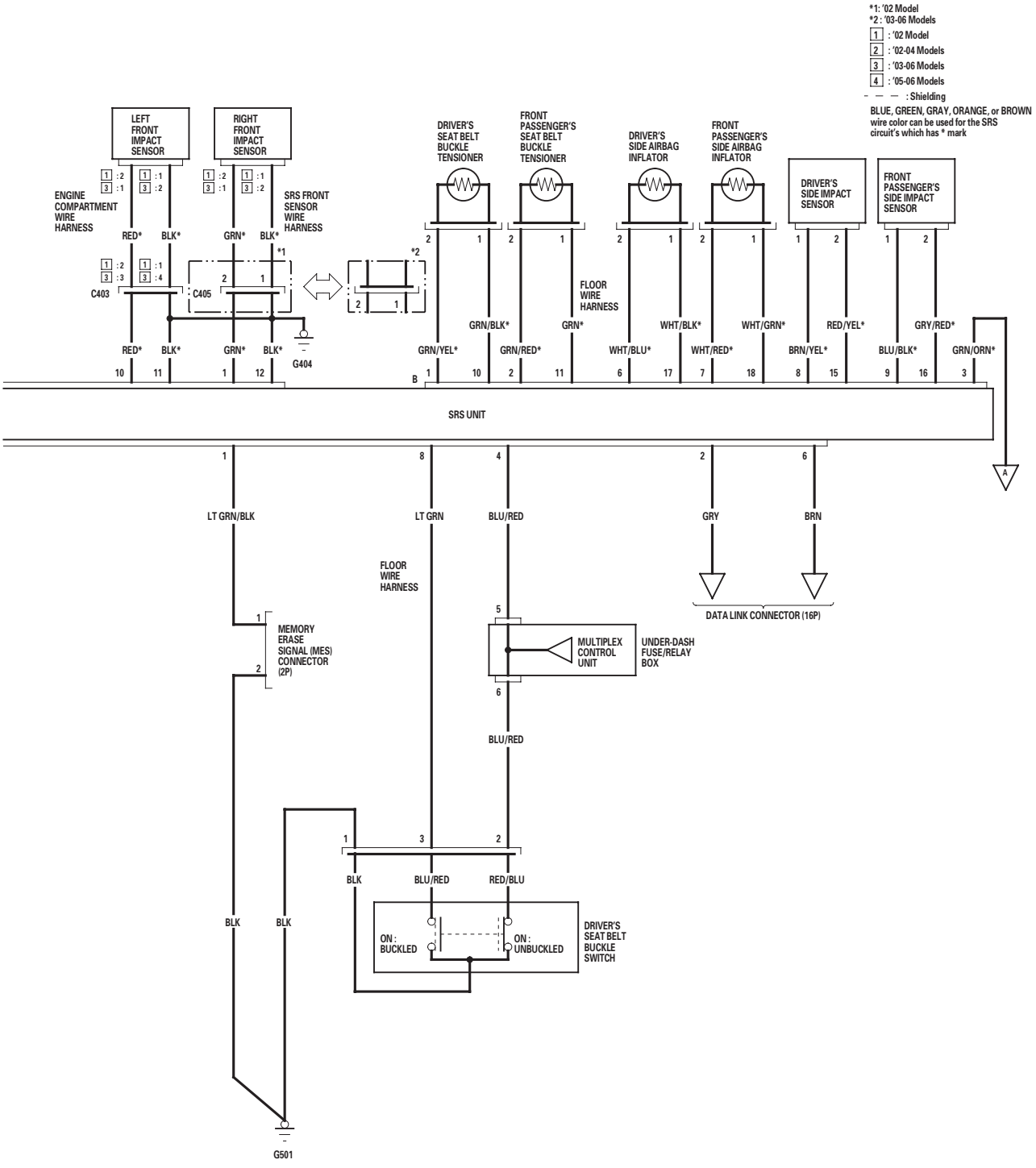
*1: '02 Model
*2 : '03-06 Models
1 : '02 Model
2 : '02-04 Models
3 : '03-06 Models
4 : '05-06 Models
: Shielding
BLUE, GREEN, GRAY, ORANGE, or BROWN wire color can be used for the SRS circuit's which has * mark
LEFT FRONT IMPACT SENSOR
RIGHT FRONT IMPACT SENSOR
ENGINE COMPARTMENT WIRE HARNESS
SRS FRONT SENSOR WIRE HARNESS
DRIVER'S SEAT BELT BUCKLE TENSIONER
FRONT PASSENGER'S SEAT BELT BUCKLE TENSIONER
DRIVER'S SIDE AIRBAG INFLATOR
FRONT PASSENGER'S SIDE AIRBAG INFLATOR
DRIVER'S SIDE IMPACT SENSOR
FRONT PASSENGER'S SIDE IMPACT SENSOR
FLOOR WIRE HARNESS
C403
C405
G404
SRS UNIT
LT GRN/BLK
LT GRN
BLU/RED
GRY
BRN
DATA LINK CONNECTOR (16P)
MEMORY ERASE SIGNAL (MES) CONNECTOR (2P)
MULTIPLEX CONTROL UNIT
UNDER-DASH FUSE/RELAY BOX
BLK
BLU/RED
RED/BLU
ON : BUCKLED
ON : UNBUCKLED
DRIVER'S SEAT BELT BUCKLE SWITCH
G501

DTC Troubleshooting

DTC 1-1: Open or Increased Resistance in Driver's Airbag Inflator

Special Tools Required
- SRS inflator simulator 07SAZ-TB4011A
- SRS simulator lead F 07XAZ-SZ30100

1. Erase the DTC memory (see page 23-23).

2. Turn the ignition switch ON (II), and check that the SRS indicator comes on for about 6 seconds and then goes off.

   Does the SRS indicator stay on?

   YES—Go to step 3.

   NO—Intermittent failure, system is OK at this time. Go to Troubleshooting Intermittent Failures (see page 23-24). If another DTC is indicated, go to the DTC Troubleshooting Index.

3. Turn the ignition switch OFF. Disconnect the battery negative cable, and wait for 3 minutes.

4. Disconnect the driver's airbag 4P connector from the cable reel (A).

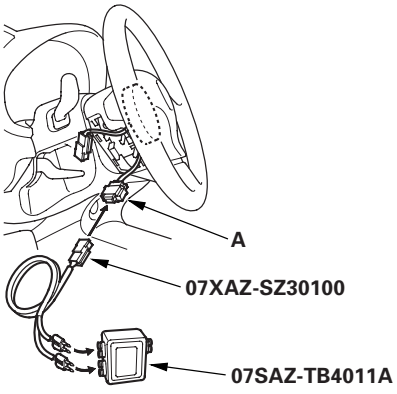

5. Connect the SRS inflator simulator (2 Ω connectors) and the simulator lead F to the cable reel 4P connector.

6. Reconnect the battery negative cable.

7. Erase the DTC memory.

8. Read the DTC.

   Is DTC 1-1 indicated?

   YES—Go to step 9.

   NO—Open or increased resistance in the driver's airbag inflator; replace the driver's airbag (see page 23-130). ■

9. Turn the ignition switch OFF. Disconnect the battery negative cable, and wait for 3 minutes.

10. Disconnect the front passenger's airbag 4P connector (A) from the dashboard wire harness.

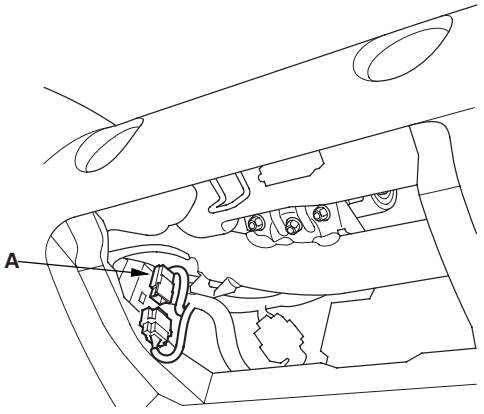

11. Disconnect both seat belt tensioner 2P connectors (A) from the floor wire harness.

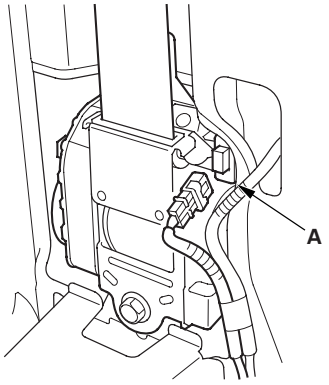

12. Disconnect SRS unit connector A (18P) from the SRS unit. Do not disconnect the simulator lead from the cable reel.

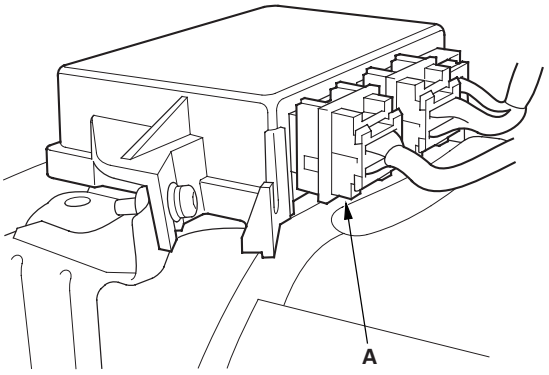

13. Check resistance between the No. 7 and the No. 16 terminals and between the No. 6 and the No. 15 terminals of SRS unit connector A (18P). There should be 2.0—3.0 Ω.

SRS UNIT CONNECTOR A (18P)

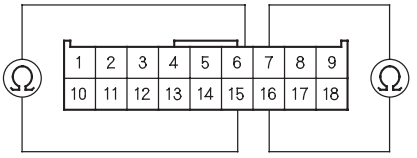

Wire side of female terminals

Is the resistance as specified?

YES—Faulty SRS unit or poor connection at SRS unit connector A (18P) and the SRS unit; check the connection between the connector and the SRS unit. If the connection is OK, replace the SRS unit (see page 23-141). ■

NO—Open or increased resistance in the dashboard wire harness or the cable reel; replace the cable reel (see page 23-138). If the problem is still present, replace the dashboard wire harness. ■

DTC Troubleshooting (cont'd)

DTC 1-3: Short to Another Wire or Decreased Resistance in Driver's Airbag Inflator

Special Tools Required
- SRS inflator simulator 07SAZ-TB4011A
- SRS simulator lead F 07XAZ-SZ30100

1. Erase the DTC memory (see page 23-23).

2. Turn the ignition switch ON (II), and check that the SRS indicator comes on for about 6 seconds and then goes off.

   Does the SRS indicator stay on?

   YES—Go to step 3.

   NO—Intermittent failure, system is OK at this time. Go to Troubleshooting Intermittent Failures (see page 23-24). If another DTC is indicated, go to the DTC Troubleshooting Index.

3. Turn the ignition switch OFF. Disconnect the battery negative cable, and wait for 3 minutes.

4. Disconnect the driver's airbag 4P connector from the cable reel (A).

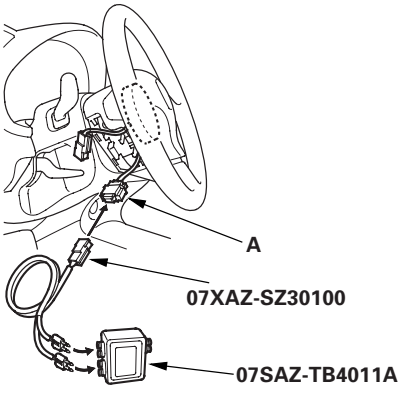

5. Connect the SRS inflator simulator (2 Ω connectors) and the simulator lead F to the cable reel 4P connector.

6. Reconnect the battery negative cable.

7. Erase the DTC memory.

8. Read the DTC.

   Is DTC 1-3 indicated?

   YES—Go to step 9.

   NO—Short in the driver's airbag inflator; replace the driver's airbag (see page 23-130). ■

9. Turn the ignition switch OFF. Disconnect the battery negative cable, and wait for 3 minutes.

10. Disconnect the front passenger's airbag 4P connector (A) from the dashboard wire harness.

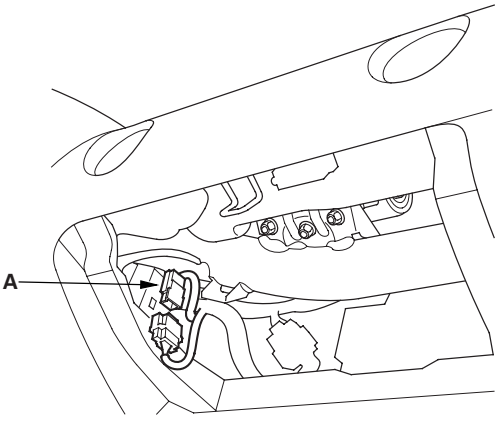

11. Disconnect both seat belt tensioner 2P connectors (A) from the floor wire harness.

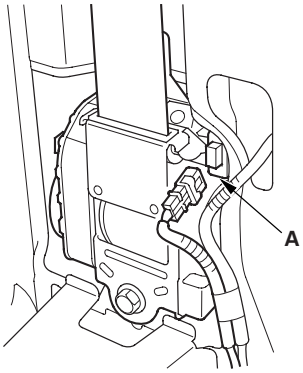

12. Disconnect SRS unit connector A (18P) from the SRS unit.

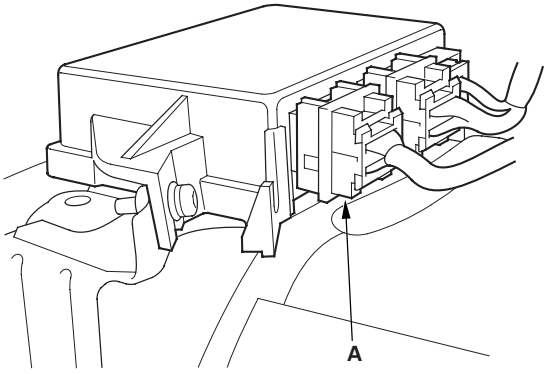

13. Disconnect the simulator lead from the cable reel 4P connector.

14. Check resistance between the No. 7 and the No. 16 terminals and between the No. 6 and the No. 15 terminals of SRS unit connector A (18P). There should be an open circuit or at least 1 MΩ.

SRS UNIT CONNECTOR A (18P)

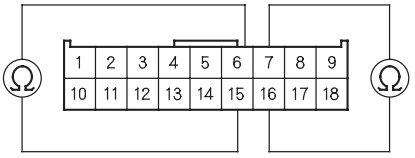

Wire side of female terminals

Is the resistance as specified?

YES—Faulty SRS unit; replace the SRS unit (see page 23-141). ■

NO—Go to step 15.

15. Disconnect the cable reel from the dashboard wire harness. Check resistance between the No. 7 and the No. 16 terminals and between the No. 6 and the No. 15 terminals of SRS unit connector A (18P). There should be an open circuit or at least 1 MΩ.

SRS UNIT CONNECTOR A (18P)

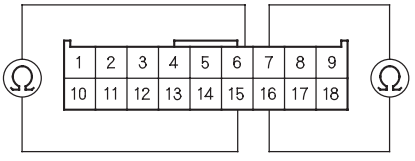

Wire side of female terminals

Is the resistance as specified?

YES—Replace the cable reel (see page 23-138). ■

NO—Replace the dashboard wire harness. ■

DTC Troubleshooting (cont'd)

DTC 1-4: Short to Power in Driver's Airbag Inflator

Special Tools Required
- SRS inflator simulator 07SAZ-TB4011A
- SRS simulator lead F 07XAZ-SZ30100

1. Erase the DTC memory (see page 23-23).

2. Turn the ignition switch ON (II), and check that the SRS indicator comes on for about 6 seconds and then goes off.

   Does the SRS indicator stay on?

   YES—Go to step 3.

   NO—Intermittent failure, system is OK at this time. Go to Troubleshooting Intermittent Failures (see page 23-24). If another DTC is indicated, go to the DTC Troubleshooting Index.

3. Turn the ignition switch OFF. Disconnect the battery negative cable, and wait for 3 minutes.

4. Disconnect the driver's airbag 4P connector from the cable reel (A).

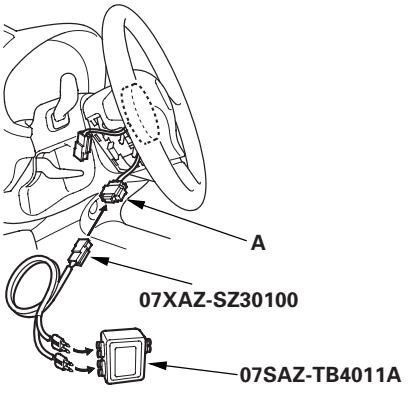

5. Connect the SRS inflator simulator (2 Ω connectors) and the simulator lead F to the cable reel 4P connector.

6. Reconnect the battery negative cable.

7. Erase the DTC memory.

8. Read the DTC.

   Is DTC 1-4 indicated?

   YES—Go to step 9.

   NO—Short to power in the driver's airbag inflator; replace the driver's airbag (see page 23-130). ■

9. Turn the ignition switch OFF. Disconnect the battery negative cable, and wait for 3 minutes.

10. Disconnect the front passenger's airbag 4P connector (A) from the dashboard wire harness.

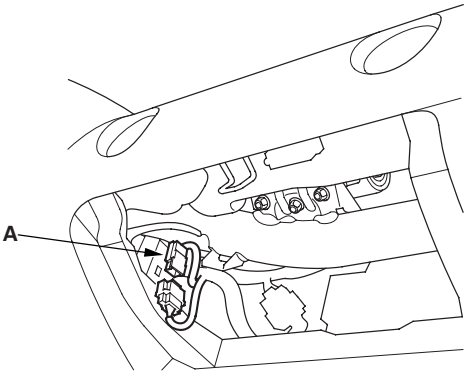

11. Disconnect both seat belt tensioner 2P connectors (A) from the floor wire harness.

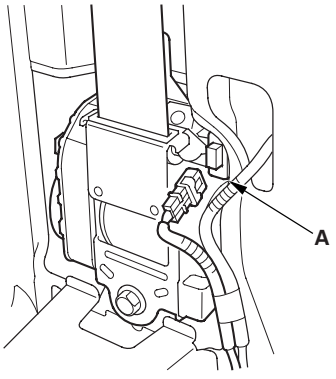

12. Disconnect SRS unit connector A (18P) from the SRS unit.

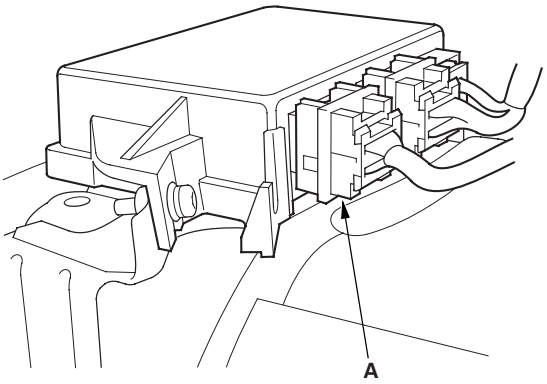

13. Disconnect the simulator lead from the cable reel 4P connector.

14. Reconnect the battery negative cable.

15. Turn the ignition switch ON (II).

16. Check for voltage between the No. 7 terminal of SRS unit connector A (18P) and body ground, between the No. 16 terminal and body ground, between the No. 6 terminal and body ground, and between the No. 15 terminal and body ground. There should be 0.5 V or less.

SRS UNIT CONNECTOR A (18P)

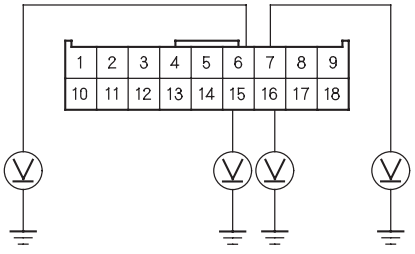

Wire side of female terminals

Is the voltage as specified?

YES—Faulty SRS unit; replace the SRS unit (see page 23-141). ■

NO—Go to step 17.

17. Turn the ignition switch OFF.

18. Disconnect the cable reel from the dashboard wire harness.

19. Turn the ignition switch ON (II).

20. Check for voltage between the No. 7 terminal of SRS unit connector A (18P) and body ground, between the No. 16 terminal and body ground, between the No. 6 terminal and body ground, and between the No. 15 terminal and body ground. There should be 0.5 V or less.

SRS UNIT CONNECTOR A (18P)

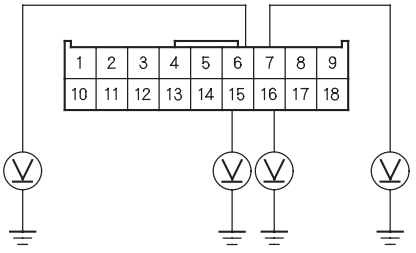

Wire side of female terminals

Is the voltage as specified?

YES—Replace the cable reel (see page 23-138). ■

NO—Replace the dashboard wire harness. ■

DTC Troubleshooting (cont'd)

DTC 1-5: Short to Ground in Driver's Airbag Inflator

Special Tools Required
- SRS inflator simulator 07SAZ-TB4011A
- SRS simulator lead F 07XAZ-SZ30100

1. Erase the DTC memory (see page 23-23).

2. Turn the ignition switch ON (II), and check that the SRS indicator comes on for about 6 seconds and then goes off.

   Does the SRS indicator stay on?

   YES—Go to step 3.

   NO—Intermittent failure, system is OK at this time. Go to Troubleshooting Intermittent Failures (see page 23-24). If another DTC is indicated, go to the DTC Troubleshooting Index.

3. Turn the ignition switch OFF. Disconnect the battery negative cable, and wait for 3 minutes.

4. Disconnect the driver's airbag 4P connector from the cable reel (A).

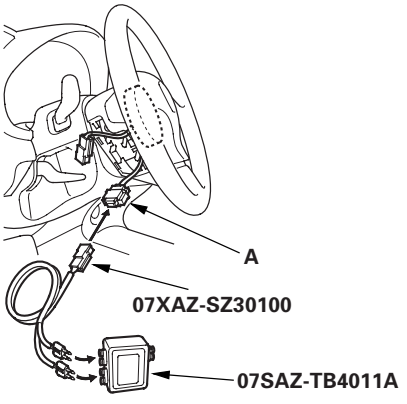

5. Connect the SRS inflator simulator (2 Ω connectors) and the simulator lead F to the cable reel 4P connector.

6. Reconnect the battery negative cable.

7. Erase the DTC memory.

8. Read the DTC.

   Is DTC 1-5 indicated?

   YES—Go to step 9.

   NO—Short to ground in the driver's airbag inflator; replace the driver's airbag (see page 23-130). ■

9. Disconnect the battery negative cable, and wait for 3 minutes.

10. Disconnect the front passenger's airbag 4P connector (A) from the dashboard wire harness.

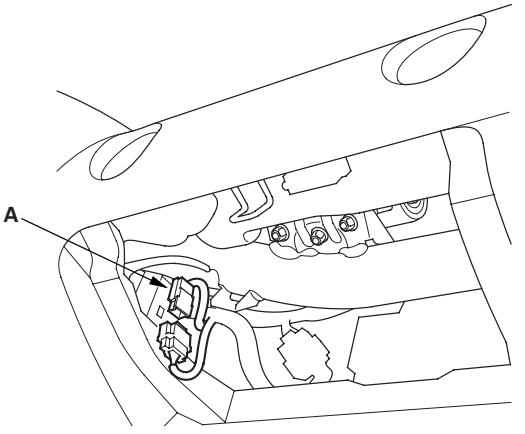

11. Disconnect both seat belt tensioner 2P connectors (A) from the floor wire harness.

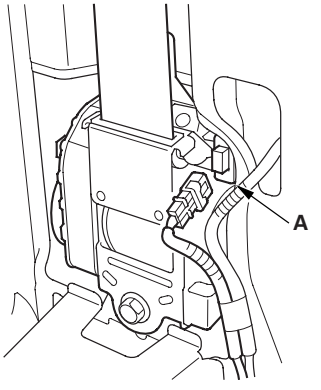

12. Disconnect SRS unit connector A (18P) from the SRS unit.

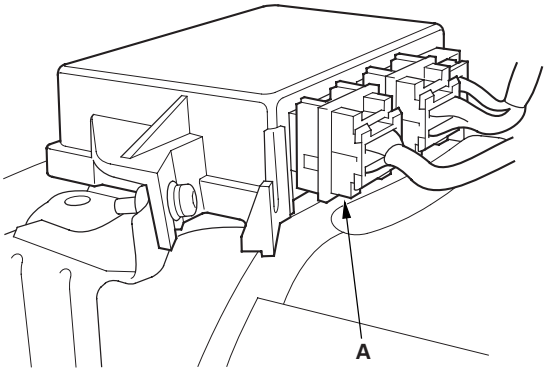

13. Disconnect the simulator lead from the cable reel 4P connector.

14. Check resistance between the No. 7 terminal of SRS unit connector A (18P) and body ground, between the No. 16 terminal and body ground, between the No. 6 terminal and body ground, and between the No. 15 terminal and body ground. There should be an open circuit or at least 1 MΩ.

SRS UNIT CONNECTOR A (18P)

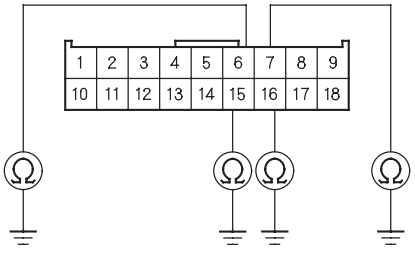

Wire side of female terminals

Is the resistance as specified?

YES—Faulty SRS unit; replace the SRS unit (see page 23-141). ■

NO—Go to step 15.

15. Disconnect the cable reel from the dashboard wire harness.

16. Check resistance between the No. 7 terminal of SRS unit connector A (18P) and body ground, between the No. 16 terminal and body ground, between the No. 6 terminal and body ground, and between the No. 15 terminal and body ground. There should be an open circuit or at least 1 MΩ.

SRS UNIT CONNECTOR A (18P)

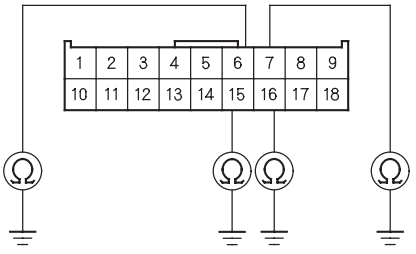

Wire side of female terminals

Is the resistance as specified?

YES—Replace the cable reel (see page 23-138). ■

NO—Replace the dashboard wire harness. ■

DTC Troubleshooting (cont'd)

DTC 2-1: Open or Increased Resistance in Front Passenger's Airbag Inflator

Special Tools Required
- SRS inflator simulator 07SAZ-TB4011A
- SRS simulator lead F 07XAZ-SZ30100

1. Erase the DTC memory (see page 23-23).

2. Turn the ignition switch ON (II), and check that the SRS indicator comes on for about 6 seconds and then goes off.

   Does the SRS indicator stay on?

   YES—Go to step 3.

   NO—Intermittent failure, system is OK at this time. Go to Troubleshooting Intermittent Failures (see page 23-24). If another DTC is indicated, go to the DTC Troubleshooting Index.

3. Turn the ignition switch OFF. Disconnect the battery negative cable, and wait for 3 minutes.

4. Disconnect the front passenger's airbag 4P connector from the dashboard wire harness (A).

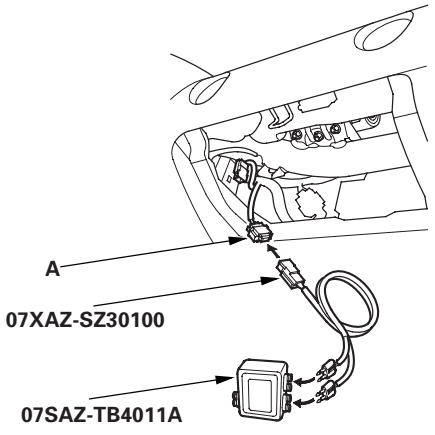

5. Connect the SRS inflator simulator (2 Ω connectors) and the simulator lead F to the dashboard wire harness 4P connector.

6. Reconnect the battery negative cable.

7. Erase the DTC memory.

8. Read the DTC.

   Is DTC 2-1 indicated?

   YES—Go to step 9.

   NO—Open or increased resistance in the front passenger's airbag inflator; replace the front passenger's airbag (see page 23-132). ■

9. Turn the ignition switch OFF. Disconnect the battery negative cable, and wait for 3 minutes.

10. Disconnect the driver's airbag 4P connector (A) from the cable reel.

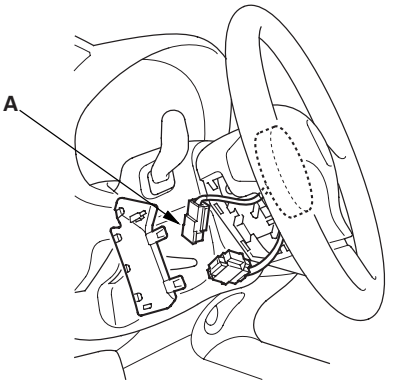

11. Disconnect both seat belt tensioner 2P connectors (A) from the floor wire harness.

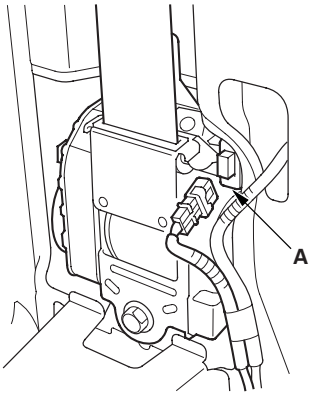

12. Disconnect SRS unit connector A (18P) from the SRS unit. Do not disconnect the simulator lead from the dashboard wire harness.

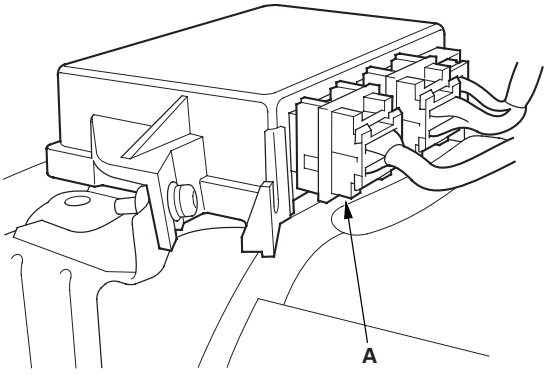

13. Check resistance between the No. 4 and No. 13 terminals and between the No. 5 and No. 14 terminals of SRS unit connector A (18P). There should be 2.0—3.0 Ω.

SRS UNIT CONNECTOR A (18P)

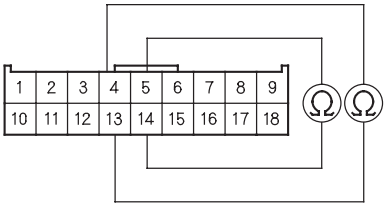

Wire side of female terminals

Is the resistance as specified?

YES—Faulty SRS unit or poor connection at the SRS unit connector A (18P). Check the connection; if the connection is OK, replace the SRS unit (see page 23-141).■

NO—Open or increased resistance in the dashboard wire harness; replace the dashboard wire harness.■

DTC 2-3: Short to Another Wire or Decreased Resistance in Front Passenger's Airbag Inflator

Special Tools Required
- SRS inflator simulator 07SAZ-TB4011A
- SRS simulator lead F 07XAZ-SZ30100

1. Erase the DTC memory (see page 23-23).

2. Turn the ignition switch ON (II), and check that the SRS indicator comes on for about 6 seconds and then goes off.

   Does the SRS indicator stay on?

   YES—Go to step 3.

   NO—Intermittent failure, system is OK at this time. Go to Troubleshooting Intermittent Failures (see page 23-24). If another DTC is indicated, go to the DTC Troubleshooting Index.

3. Turn the ignition switch OFF. Disconnect the battery negative cable, and wait for 3 minutes.

4. Disconnect the front passenger's airbag 4P connector from the dashboard wire harness (A).

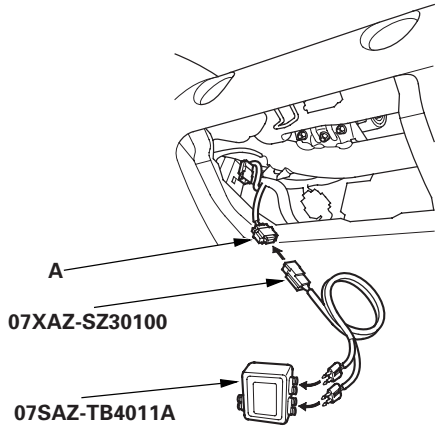

5. Connect the SRS inflator simulator (2 Ω connectors) and the simulator lead F to the dashboard wire harness 4P connector.

6. Reconnect the battery negative cable.

7. Erase the DTC memory.

(cont'd)

DTC Troubleshooting (cont'd)

8. Read the DTC.

   Is DTC 2-3 indicated?

   YES—Go to step 9.

   NO—Short in the front passenger's airbag inflator; replace the front passenger's airbag (see page 23-132). ■

9. Turn the ignition switch OFF. Disconnect the battery negative cable, and wait for 3 minutes.

10. Disconnect the driver's airbag 4P connector (A) from the cable reel.

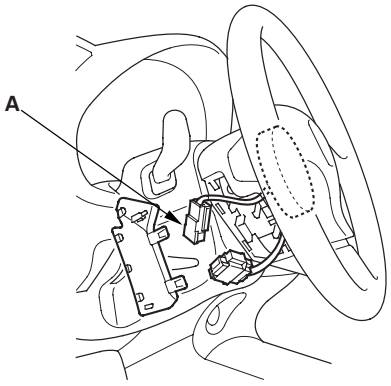

11. Disconnect both seat belt tensioner 2P connectors (A) from the floor wire harness 2P connectors (B).

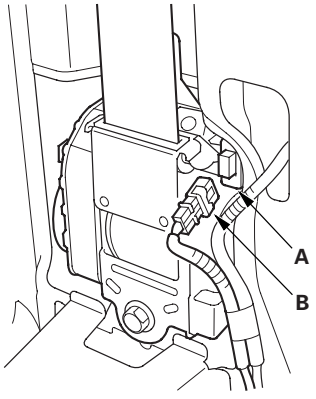

12. Disconnect SRS unit connector A (18P) from the SRS unit.

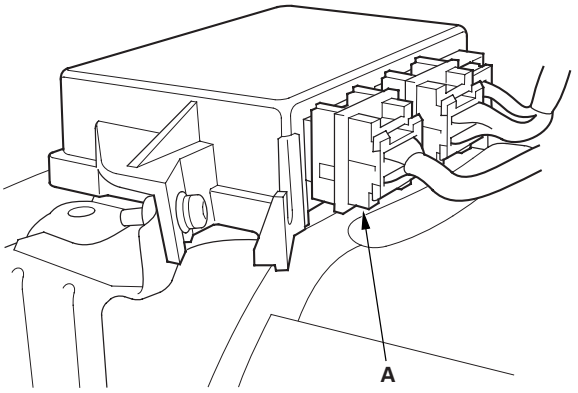

13. Disconnect the simulator lead from the dashboard wire harness 4P connector.

14. Check resistance between the No. 4 and No. 13 terminals and between the No. 5 and No. 14 terminals of SRS unit connector A (18P). There should be an open circuit or at least 1 MΩ.

SRS UNIT CONNECTOR A (18P)

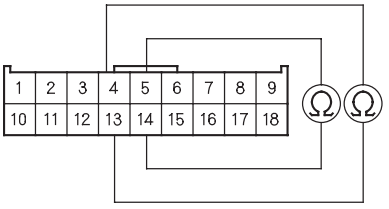

Wire side of female terminals

Is the resistance as specified?

YES—Faulty SRS unit; replace the SRS unit (see page 23-141). ■

NO—Short in the dashboard wire harness; replace the dashboard wire harness. ■

DTC 2-4: Short to Power in Front Passenger's Airbag Inflator

Special Tools Required
- SRS inflator simulator 07SAZ-TB4011A
- SRS simulator lead F 07XAZ-SZ30100

1. Erase the DTC memory (see page 23-23).

2. Turn the ignition switch ON (II), and check that the SRS indicator comes on for about 6 seconds and then goes off.

   Does the SRS indicator stay on?

   YES—Go to step 3.

   NO—Intermittent failure, system is OK at this time. Go to Troubleshooting Intermittent Failures (see page 23-24). If another DTC is indicated, go to the DTC Trouble shooting Index.

3. Turn the ignition switch OFF. Disconnect the battery negative cable, and wait for 3 minutes.

4. Disconnect the front passenger's airbag 4P connector from the dashboard wire harness (A).

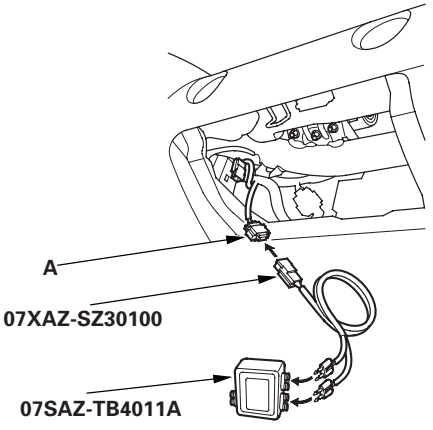

5. Connect the SRS inflator simulator (2 Ω connectors) and the simulator lead F to the dashboard wire harness 4P connector.

6. Reconnect the battery negative cable.

7. Erase the DTC memory.

8. Read the DTC.

   Is DTC 2-4 indicated?

   YES—Go to step 9.

   NO—Short to power in the front passenger's airbag inflator; replace the front passenger's airbag (see page 23-132). ■

9. Turn the ignition switch OFF. Disconnect the battery negative cable, and wait for 3 minutes.

10. Disconnect the driver's airbag 4P connector (A) from the cable reel.

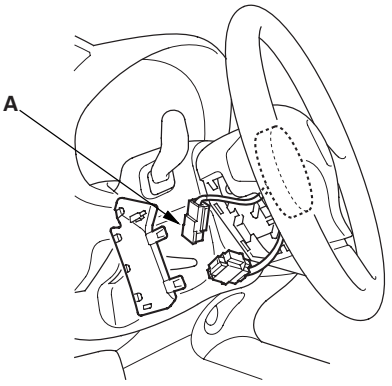

11. Disconnect both seat belt tensioner 2P connectors (A) from the floor wire harness.

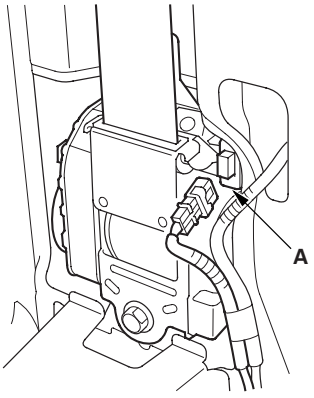

(cont'd)

DTC Troubleshooting (cont'd)

12. Disconnect SRS unit connector A (18P) from the SRS unit.

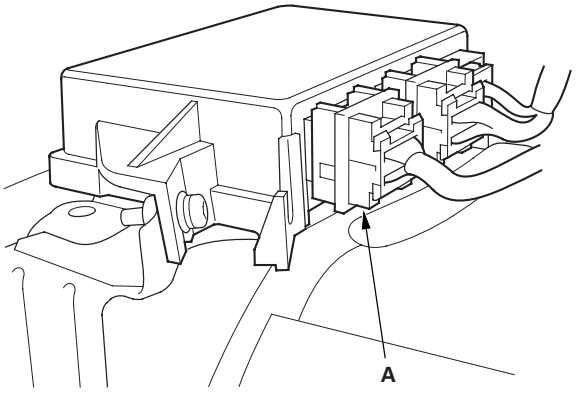

13. Disconnect the simulator lead from the dashboard wire harness 4P connector.

14. Reconnect the battery negative cable.

15. Turn the ignition switch ON (II).

16. Check for voltage between the No. 4 terminal of SRS unit connector A (18P) and body ground, between the No. 13 terminal and body ground, between the No. 5 terminal and body ground, and between the No. 14 terminal and body ground. There should be 0.5 V or less.

SRS UNIT CONNECTOR A (18P)

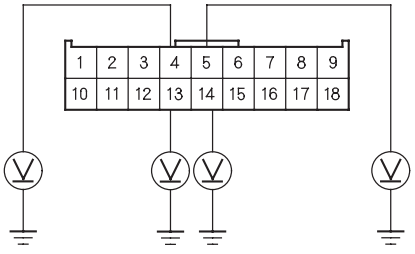

Wire side of female terminals

Is the voltage as specified?

YES—Faulty SRS unit; replace the SRS unit (see page 23-141).■

NO—Short to power in the dashboard wire harness; replace the dashboard wire harness.■

DTC 2-5: Short to Ground in Front Passenger's Airbag Inflator

Special Tools Required
- SRS inflator simulator 07SAZ-TB4011A
- SRS simulator lead F 07XAZ-SZ30100

1. Erase the DTC memory (see page 23-23).

2. Turn the ignition switch ON (II), and check that the SRS indicator comes on for about 6 seconds and then goes off.

   Does the SRS indicator stay on?

   YES—Go to step 3.

   NO—Intermittent failure, system is OK at this time. Go to Troubleshooting Intermittent Failures (see page 23-24). If another DTC is indicated, go to the DTC Troubleshooting Index.

3. Turn the ignition switch OFF. Disconnect the battery negative cable, and wait for 3 minutes.

4. Disconnect the front passenger's airbag 4P connector from the dashboard wire harness (A).

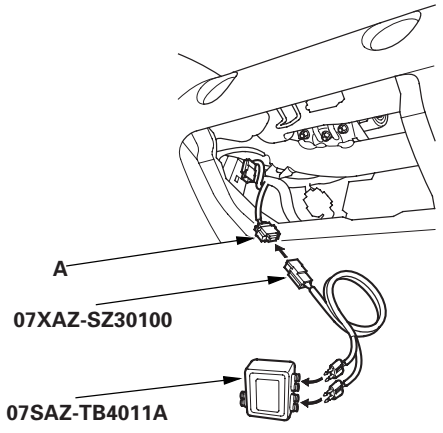

5. Connect the SRS inflator simulator (2 Ω connectors) and the simulator lead F to the dashboard wire harness 4P connector.

6. Reconnect the battery negative cable.

7. Erase the DTC memory.

8. Read the DTC.

   Is DTC 2-5 indicated?

   YES—Go to step 9.

   NO—Short to ground in the front passenger's airbag inflator; replace the front passenger's airbag (see page 23-132). ■

9. Turn the ignition switch OFF. Disconnect the battery negative cable, and wait for 3 minutes.

10. Disconnect the driver's airbag 4P connector (A) from the cable reel.

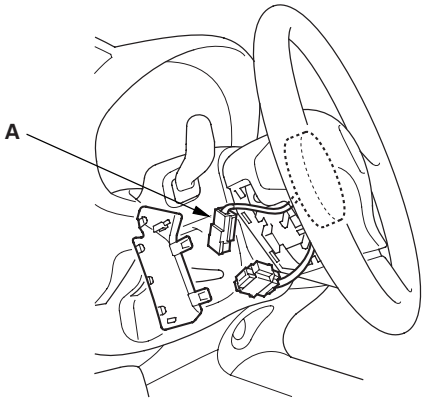

11. Disconnect both seat belt tensioner 2P connectors (A) from the floor wire harness.

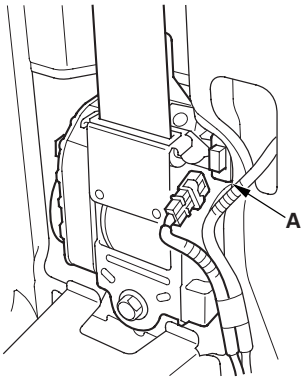

12. Disconnect SRS unit connector A (18P) from the SRS unit.

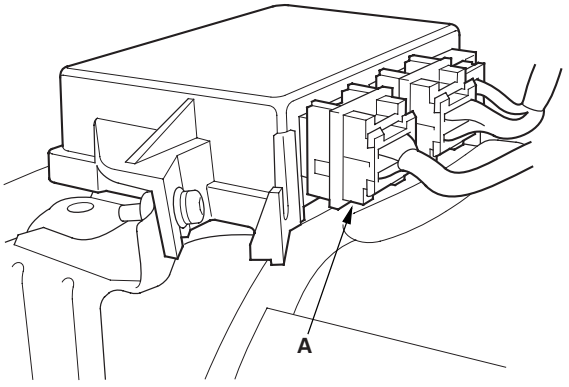

13. Disconnect the simulator lead from the dashboard wire harness 4P connector.

14. Check resistance between the No. 4 terminal of SRS unit connector A (18P) and body ground, and between the No. 13 terminal and body ground, between the No. 5 terminal and body ground, and between the No. 14 terminal and body ground. There should be an open circuit or at least 1 MΩ.

SRS UNIT CONNECTOR A (18P)

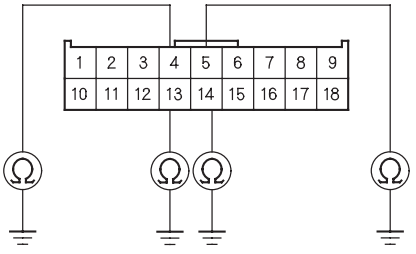

Wire side of female terminals

Is the resistance as specified?

YES—Faulty SRS unit; replace the SRS unit (see page 23-141). ■

NO—Short to ground in the dashboard wire harness; replace the dashboard wire harness. ■

DTC Troubleshooting (cont'd)

DTC 3-1: Open or Increased Resistance in Driver's Seat Belt Tensioner

Special Tools Required
- SRS inflator simulator 07SAZ-TB4011A
- SRS simulator lead C 07TAZ-SZ5011A
- SRS simulator lead F 07XAZ-SZ30100

1. Erase the DTC memory (see page 23-23).

2. Turn the ignition switch ON (II), and check that the SRS indicator comes on for about 6 seconds and then goes off.

   Does the SRS indicator stay on?

   YES—Go to step 3.

   NO—Intermittent failure, system is OK at this time. Go to Troubleshooting Intermittent Failures (see page 23-24). If another DTC is indicated, go to the DTC Troubleshooting Index.

3. Turn the ignition switch OFF. Disconnect the battery negative cable, and wait for 3 minutes.

4. Disconnect the driver's seat belt tensioner 2P connector from the floor wire harness (A).

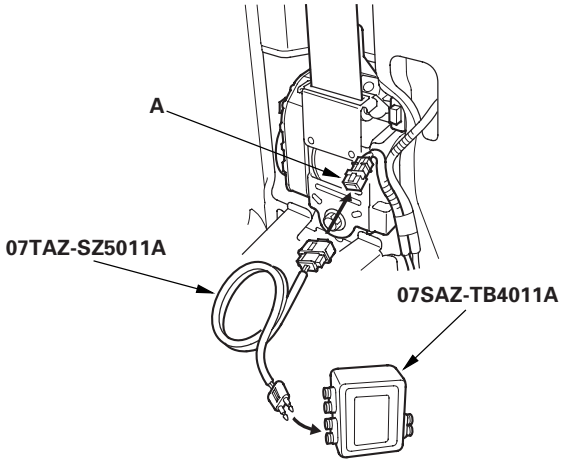

5. Connect the SRS inflator simulator (2 Ω connector) and the simulator lead C to the floor wire harness 2P connector.

6. Reconnect the battery negative cable.

7. Erase the DTC memory.

8. Read the DTC.

   Is DTC 3-1 indicated?

   YES—Go to step 9.

   NO—Open or increased resistance in the driver's seat belt tensioner; replace the driver's seat belt (see page 23-4). ■

9. Turn the ignition switch OFF. Disconnect the battery negative cable, and wait for 3 minutes.

10. Disconnect the floor wire harness 4P connector (A) from the dashboard wire harness C504.

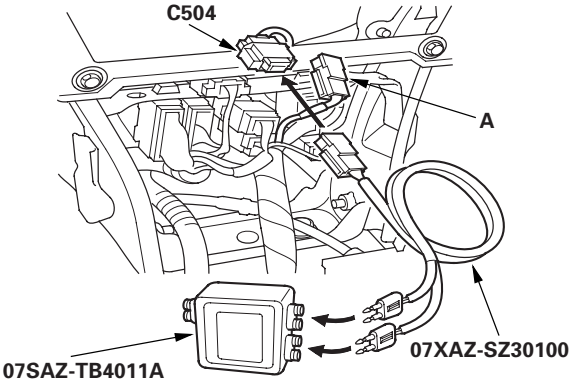

11. Connect the SRS inflator simulator (2 Ω connectors) and the simulator lead F to the dashboard wire harness 4P connector C504.

12. Reconnect the battery negative cable.

13. Erase the DTC memory.

14. Read the DTC.

    Is DTC 3-1 indicated?

    YES—Go to step 15.

    NO—Open or increased resistance in the floor wire harness; replace the floor wire harness. ■

15. Turn the ignition switch OFF. Disconnect the battery negative cable, and wait for 3 minutes.

16. Disconnect the driver's airbag connector (A), front passenger's airbag connector (B), and front passenger's seat belt tensioner connector (C).

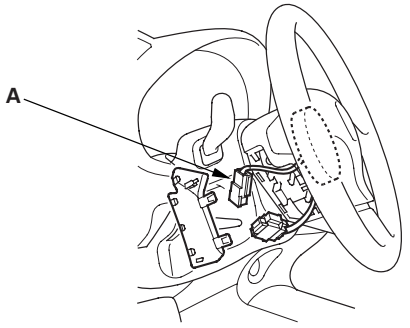

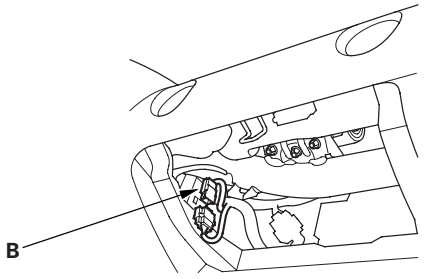

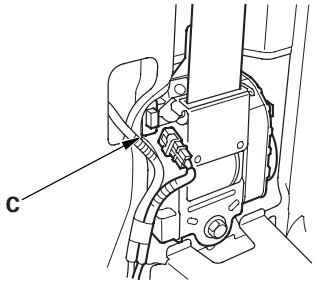

17. Disconnect SRS unit connector A (18P) from the SRS unit. Do not disconnect the simulator lead from the dashboard wire harness.

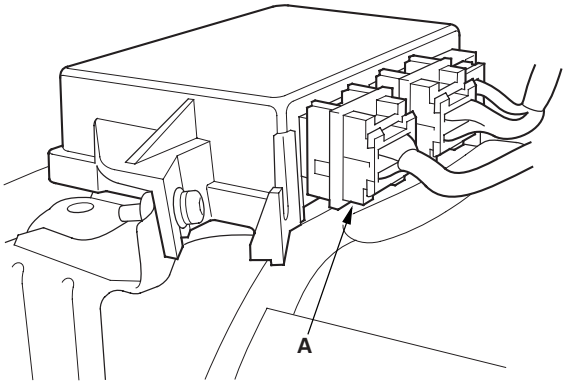

18. Check resistance between the No. 8 terminal and the No. 17 terminal of SRS unit connector A (18P). There should be 2.0—3.0 Ω.

SRS UNIT CONNECTOR A (18P)

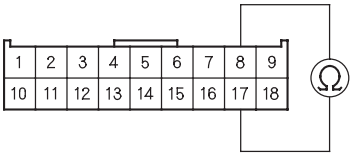

Wire side of female terminals

Is the resistance as specified?

YES—Faulty SRS unit or poor connection at SRS unit connector A (18P) and the SRS unit. Check the connection; if the connection is OK, replace the SRS unit (see page 23-141).■

NO—Open or increased resistance in the dashboard wire harness; replace the dashboard wire harness.■

DTC Troubleshooting (cont'd)

DTC 3-3: Short to Another Wire or Decreased Resistance in Driver's Seat Belt Tensioner

Special Tools Required
- SRS inflator simulator 07SAZ-TB4011A
- SRS simulator lead C 07TAZ-SZ5011A
- SRS simulator lead F 07XAZ-SZ30100

1. Erase the DTC memory (see page 23-23).

2. Turn the ignition switch ON (II), and check that the SRS indicator comes on for about 6 seconds and then goes off.

   Does the SRS indicator stay on?

   YES—Go to step 3.

   NO—Intermittent failure, system is OK at this time. Go to Troubleshooting Intermittent Failures (see page 23-24). If another DTC is indicated, go to the DTC Troubleshooting Index.

3. Turn the ignition switch OFF. Disconnect the battery negative cable, and wait for 3 minutes.

4. Disconnect the driver's seat belt tensioner 2P connector from the floor wire harness (A).

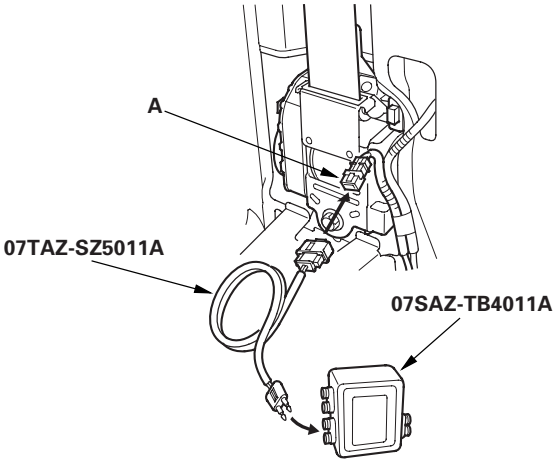

5. Connect the SRS inflator simulator (2 Ω connector) and the simulator lead C to the floor wire harness 2P connector.

6. Reconnect the battery negative cable.

7. Erase the DTC memory.

8. Read the DTC.

   Is DTC 3-3 indicated?

   YES—Go to step 9.

   NO—Short in the driver's seat belt tensioner; replace the driver's seat belt (see page 23-4). ■

9. Turn the ignition switch OFF. Disconnect the battery negative cable, and wait for 3 minutes.

10. Disconnect the floor wire harness 4P connector (A) from the dashboard wire harness C504.

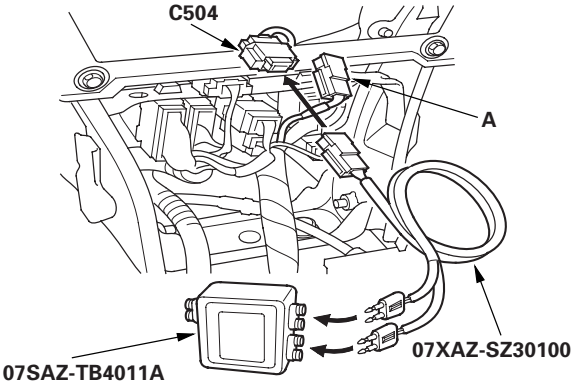

11. Connect the SRS inflator simulator (2 Ω connectors) and the simulator lead F to the dashboard wire harness 4P connector C504.

12. Reconnect the battery negative cable.

13. Erase the DTC memory.

14. Read the DTC.

    Is DTC 3-3 indicated?

    YES—Go to step 15.

    NO—Short in the floor wire harness; replace the floor wire harness. ■

15. Turn the ignition switch OFF. Disconnect the battery negative cable, and wait for 3 minutes.

16. Disconnect the driver's airbag connector (A), front passenger's airbag connector (B), and front passenger's seat belt tensioner connector (C).

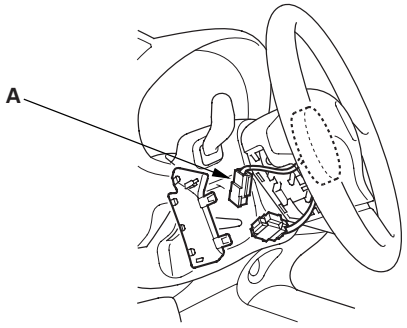

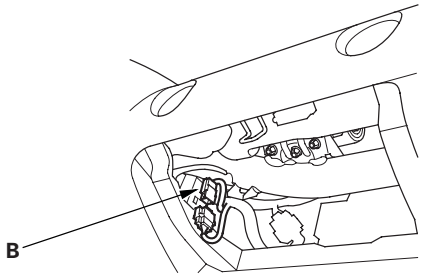

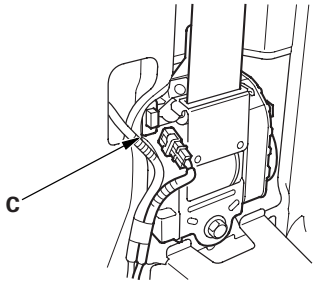

17. Disconnect SRS unit connector A (18P) from the SRS unit.

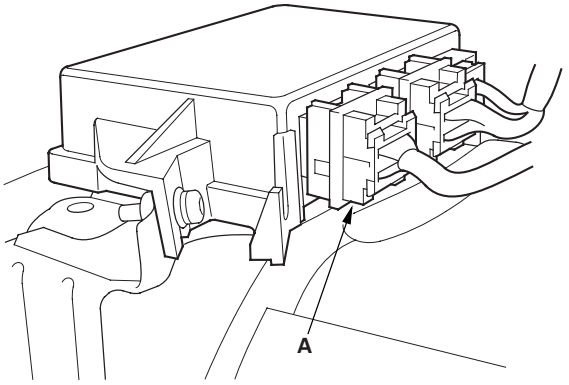

18. Disconnect the simulator lead from the dashboard wire harness 4P connector.

19. Check resistance between the No. 8 terminal and the No. 17 terminal of SRS unit connector A (18P). There should be an open circuit or at least 1 MΩ.

SRS UNIT CONNECTOR A (18P)

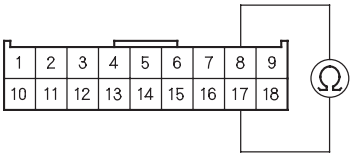

Wire side of female terminals

Is the resistance as specified?

YES—Faulty SRS unit; replace the SRS unit (see page 23-141). ■

NO—Short in the dashboard wire harness; replace the dashboard wire harness. ■

DTC Troubleshooting (cont'd)

DTC 3-4: Short to Power in Driver's Seat Belt Tensioner

Special Tools Required
- SRS inflator simulator 07SAZ-TB4011A
- SRS simulator lead C 07TAZ-SZ5011A
- SRS simulator lead F 07XAZ-SZ30100

1. Erase the DTC memory (see page 23-23).

2. Turn the ignition switch ON (II), and check that the SRS indicator comes on for about 6 seconds and then goes off.

   Does the SRS indicator stay on?

   YES—Go to step 3.

   NO—Intermittent failure, system is OK at this time. Go to Troubleshooting Intermittent Failures (see page 23-24). If another DTC is indicated, go to the DTC Troubleshooting Index.

3. Turn the ignition switch OFF. Disconnect the battery negative cable, and wait for 3 minutes.

4. Disconnect the driver's seat belt tensioner 2P connector from the floor wire harness (A).

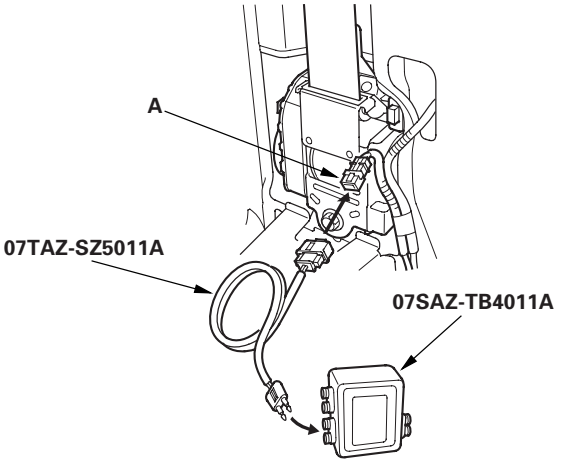

5. Connect the SRS inflator simulator (2 Ω connector) and the simulator lead C to the floor wire harness 2P connector.

6. Reconnect the battery negative cable.

7. Erase the DTC memory.

8. Read the DTC.

   Is DTC 3-4 indicated?

   YES—Go to step 9.

   NO—Short to power in the driver's seat belt tensioner; replace the driver's seat belt (see page 23-4). ■

9. Turn the ignition switch OFF. Disconnect the battery negative cable, and wait for 3 minutes.

10. Disconnect the floor wire harness 4P connector (A) from the dashboard wire harness C504.

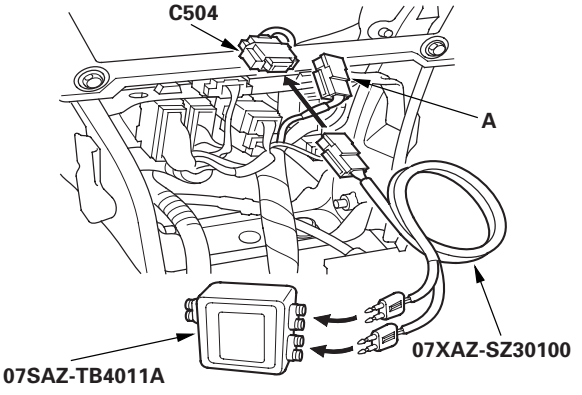

11. Connect the SRS inflator simulator (2 Ω connectors) and the simulator lead F to the dashboard wire harness 4P connector C504.

12. Reconnect the battery negative cable.

13. Erase the DTC memory.

14. Read the DTC.

    Is DTC 3-4 indicated?

    YES—Go to step 15.

    NO—Short to power in the floor wire harness; replace the floor wire harness. ■

15. Turn the ignition switch OFF. Disconnect the battery negative cable, and wait for 3 minutes.

16. Disconnect the driver's airbag connector (A), front passenger's airbag connector (B), and front passenger's seat belt tensioner connector (C).

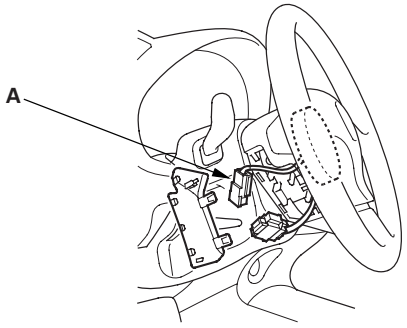

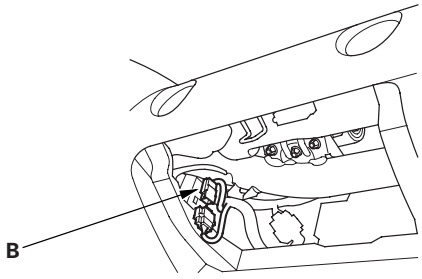

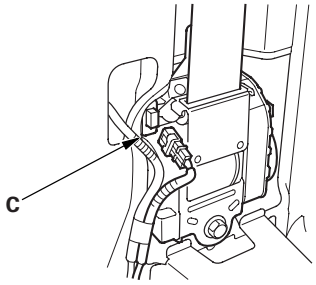

17. Disconnect SRS unit connector A (18P) from the SRS unit.

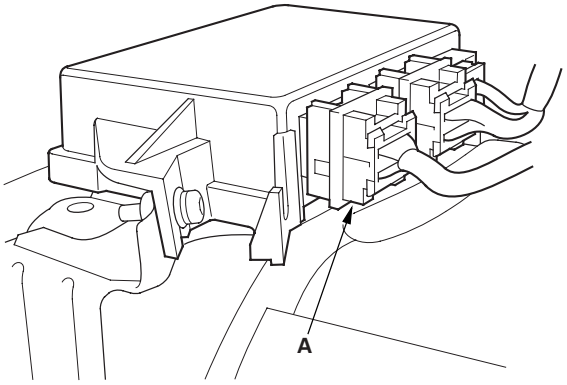

18. Disconnect the simulator lead from the dashboard wire harness 4P connector.

19. Reconnect the battery negative cable.

20. Turn the ignition switch ON (II).

21. Check for voltage between the No. 8 terminal of SRS unit connector A (18P) and body ground and between the No. 17 terminal and body ground. There should be 0.5 V or less.

SRS UNIT CONNECTOR A (18P)

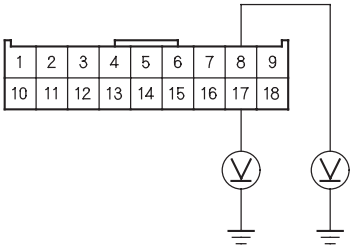

Wire side of female terminals

Is the voltage as specified?

YES—Faulty SRS unit; replace the SRS unit (see page 23-141). ■

NO—Short to power in the dashboard wire harness; replace the dashboard wire harness. ■

DTC Troubleshooting (cont'd)

DTC 3-5: Short to Ground in Driver's Seat Belt Tensioner

Special Tools Required
- SRS inflator simulator 07SAZ-TB4011A
- SRS simulator lead C 07TAZ-SZ5011A
- SRS simulator lead F 07XAZ-SZ30100

1. Erase the DTC memory (see page 23-23).

2. Turn the ignition switch ON (II), and check that the SRS indicator comes on for about 6 seconds and then goes off.

   Does the SRS indicator stay on?

   YES—Go to step 3.

   NO—Intermittent failure, system is OK at this time. Go to Troubleshooting Intermittent Failures (see page 23-24). If another DTC is indicated, go to the DTC Troubleshooting Index.

3. Turn the ignition switch OFF. Disconnect the battery negative cable, and wait for 3 minutes.

4. Disconnect the driver's seat belt tensioner 2P connector from the floor wire harness (A).

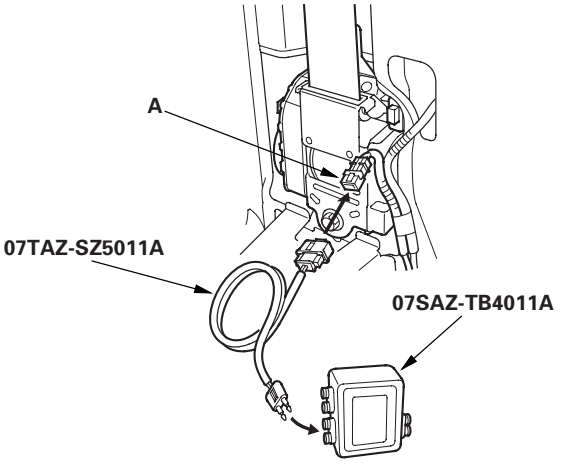

5. Connect the SRS inflator simulator (2 Ω connector) and the simulator lead C to the floor wire harness 2P connector.

6. Reconnect the battery negative cable.

7. Erase the DTC memory.

8. Read the DTC.

   Is DTC 3-5 indicated?

   YES—Go to step 9.

   NO—Short to ground in the driver's seat belt tensioner; replace the driver's seat belt (see page 23-4). ■

9. Turn the ignition switch OFF. Disconnect the battery negative cable, and wait for 3 minutes.

10. Disconnect the floor wire harness 4P connector (A) from the dashboard wire harness C504.

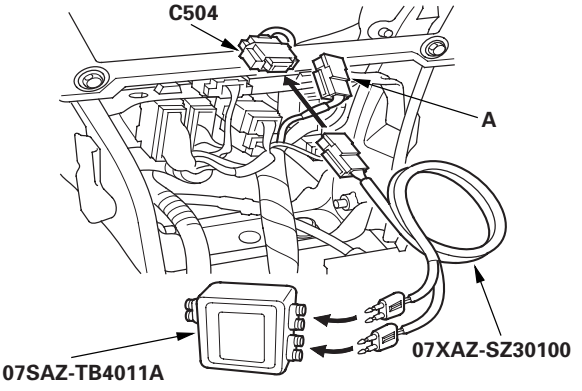

11. Connect the SRS inflator simulator (2 Ω connectors) and the simulator lead F to the dashboard wire harness 4P connector C504.

12. Reconnect the battery negative cable.

13. Erase the DTC memory.

14. Read the DTC.

    Is DTC 3-5 indicated?

    YES—Go to step 15.

    NO—Short to ground in the floor wire harness; replace the floor wire harness. ■

15. Turn the ignition switch OFF. Disconnect the battery negative cable, and wait for 3 minutes.

16. Disconnect the driver's airbag connector (A), front passenger's airbag connector (B), and front passenger's seat belt tensioner connector (C).

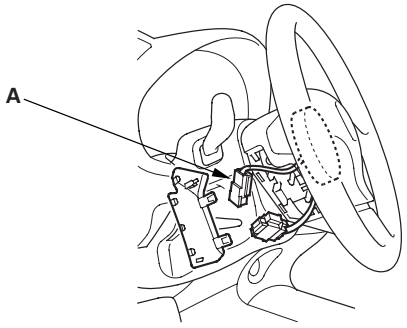

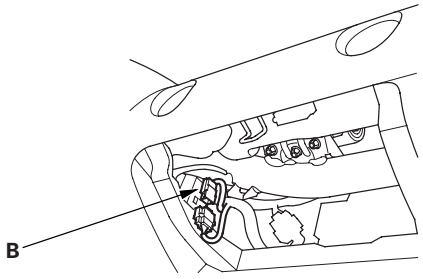

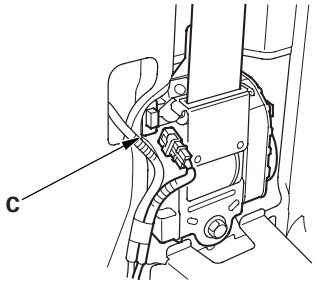

17. Disconnect SRS unit connector A (18P) from the SRS unit.

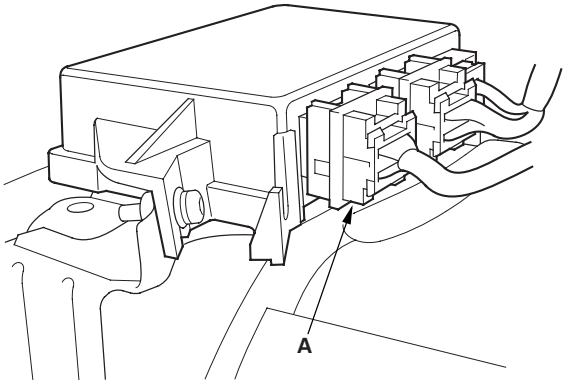

18. Disconnect the simulator lead from the dashboard wire harness 4P connector.

19. Check resistance between the No. 8 terminal of SRS unit connector A (18P) and body ground, and between the No. 17 terminal and body ground. There should be an open circuit or at least 1 MΩ.

SRS UNIT CONNECTOR A (18P)

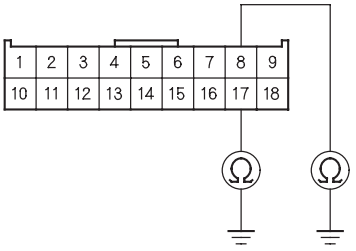

Wire side of female terminals

Is the resistance as specified?

YES—Faulty SRS unit; replace the SRS unit (see page 23-141). ■

NO—Short to ground in the dashboard wire harness; replace the dashboard wire harness. ■

DTC Troubleshooting (cont'd)

DTC 21-1: Open or Increased Resistance in Driver's Seat Belt Buckle Tensioner

Special Tools Required
- SRS inflator simulator 07SAZ-TB4011A
- SRS simulator lead F 07XAZ-SZ30100

1. Erase the DTC memory (see page 23-23).

2. Turn the ignition switch ON (II), and check that the SRS indicator comes on for about 6 seconds and then goes off.

   Does the SRS indicator stay on?

   YES—Go to step 3.

   NO—Intermittent failure, system is OK at this time. Go to Troubleshooting Intermittent Failures (see page 23-24). If another DTC is indicated, go to the DTC Troubleshooting Index.

3. Turn the ignition switch OFF. Disconnect the battery negative cable, and wait for 3 minutes.

4. Disconnect the driver's seat belt buckle tensioner 4P connector from the floor wire harness (A).

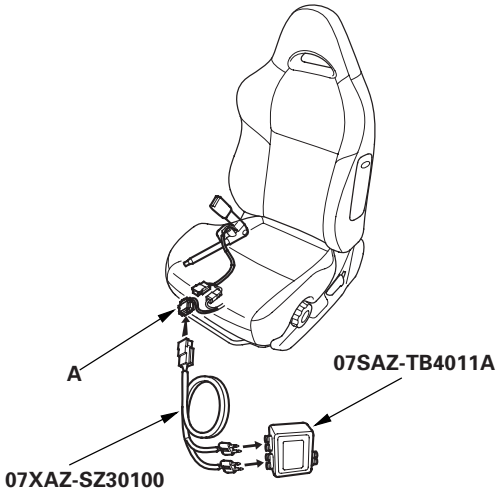

5. Connect the SRS inflator simulator (2 Ω connectors) and the simulator lead F to the floor wire harness 4P connector.

6. Reconnect the battery negative cable.

7. Erase the DTC memory.

8. Read the DTC.

   Is DTC 21-1 indicated?

   YES—Go to step 9.

   NO—Open or increased resistance in the driver's seat belt buckle tensioner; replace the driver's seat belt buckle.■

9. Turn the ignition switch OFF. Disconnect the battery negative cable, and wait for 3 minutes.

10. Disconnect both side airbag 2P connectors (A) and the front passenger's seat belt buckle tensioner 4P connector (B).

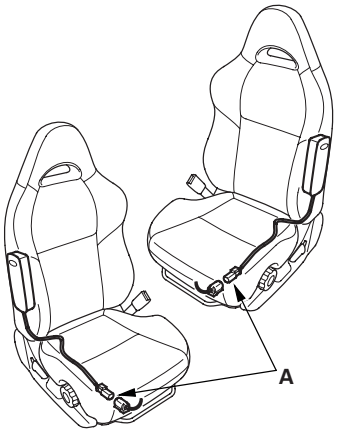

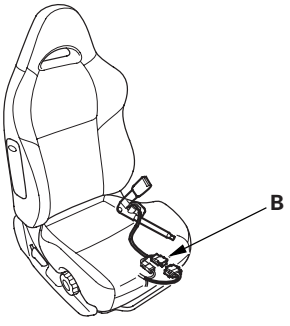

11. Disconnect SRS unit connector B (18P) from the SRS unit. Do not disconnect the simulator lead from the floor wire harness.

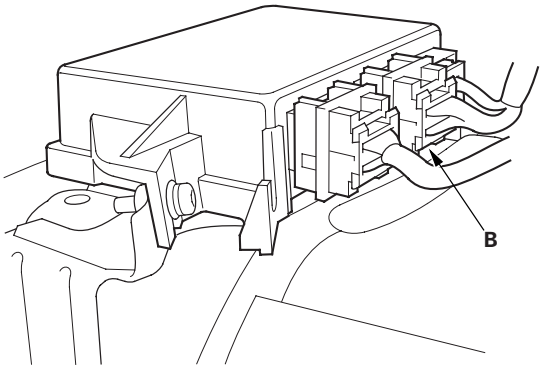

12. Check resistance between the No. 1 and No. 10 terminals of SRS unit connector B (18P). There should be 2.0—3.0 Ω.

SRS UNIT CONNECTOR B (18P)

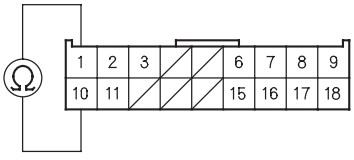

Wire side of female terminals

Is the resistance as specified?

YES—Faulty SRS unit or poor cnnection at SRS unit connector B (18P) and the SRS unit. Check the connection; if the connection is OK, replace the SRS unit (see page 23-141).■

NO—Open or increased resistance in the floor wire harness; replace the floor wire harness.■

DTC 21-3: Short to Another Wire or Decreased Resistance in Driver's Seat Belt Buckle Tensioner

Special Tools Required
- SRS inflator simulator 07SAZ-TB4011A
- SRS simulator lead F 07XAZ-SZ30100

1. Erase the DTC memory (see page 23-23).

2. Turn the ignition switch ON (II), and check that the SRS indicator comes on for about 6 seconds and then goes off.

   Does the SRS indicator stay on?

   YES—Go to step 3.

   NO—Intermittent failure, system is OK at this time. Go to Troubleshooting Intermittent Failures (see page 23-24). If another DTC is indicated, go to the DTC Troubleshooting Index.

3. Turn the ignition switch OFF. Disconnect the battery negative cable, and wait for 3 minutes.

4. Disconnect the driver's seat belt buckle tensioner 4P connector from the floor wire harness 4P connector (A).

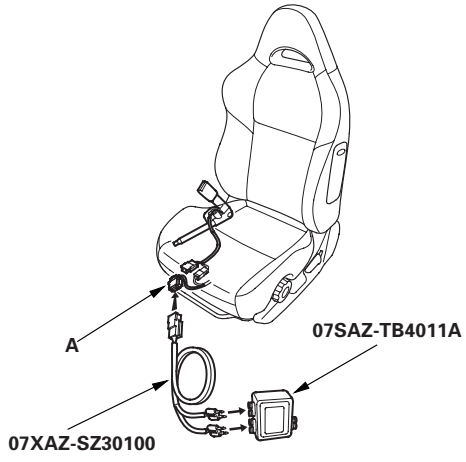

5. Connect the SRS inflator simulator (2 Ω connectors) and the simulator lead F to the floor wire harness 4P connector.

6. Reconnect the battery negative cable.

7. Erase the DTC memory.

(cont'd)

DTC Troubleshooting (cont'd)

8. Read the DTC.

   Is DTC 21-3 indicated?

   YES—Go to step 9.

   NO—Short in the driver's seat belt buckle tensioner; replace the driver's seat belt buckle (see page 23-4). ■

9. Turn the ignition switch OFF. Disconnect the battery negative cable, and wait for 3 minutes.

10. Disconnect both side airbag 2P connectors (A) and the front passenger's seat belt buckle tensioner 4P connector (B).

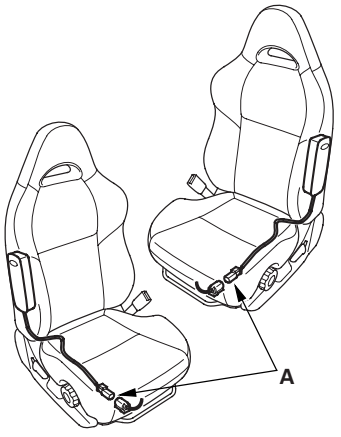

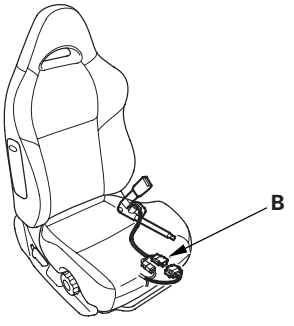

11. Disconnect SRS unit connector B (18P) from the SRS unit.

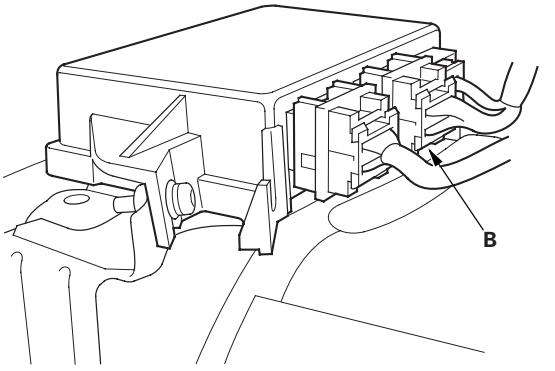

12. Disconnect the simulator lead from the floor wire harness 4P connector.

13. Check resistance between the No. 1 and No. 10 terminals of SRS unit connector B (18P). There should be an open circuit or at least 1 MΩ.

SRS UNIT CONNECTOR B (18P)

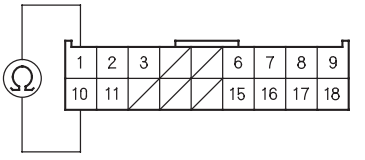

Wire side of female terminals

Is the resistance as specified?

YES—Faulty SRS unit; replace the SRS unit (see page 23-141). ■

NO—Short in the floor wire harness; replace the floor wire harness. ■

DTC 21-4: Short to Power in Driver's Seat Belt Buckle Tensioner

Special Tools Required
- SRS inflator simulator 07SAZ-TB4011A
- SRS simulator lead F 07XAZ-SZ30100

1. Erase the DTC memory (see page 23-23).

2. Turn the ignition switch ON (II), and check that the SRS indicator comes on for about 6 seconds and then goes off.

   Does the SRS indicator stay on?

   YES—Go to step 3.

   NO—Intermittent failure, system is OK at this time. Go to Troubleshooting Intermittent Failures (see page 23-24). If another DTC is indicated, go to the DTC Troubleshooting Index.

3. Turn the ignition switch OFF. Disconnect the battery negative cable, and wait for 3 minutes.

4. Disconnect the driver's seat belt buckle tensioner 4P connector from the floor wire harness (A).

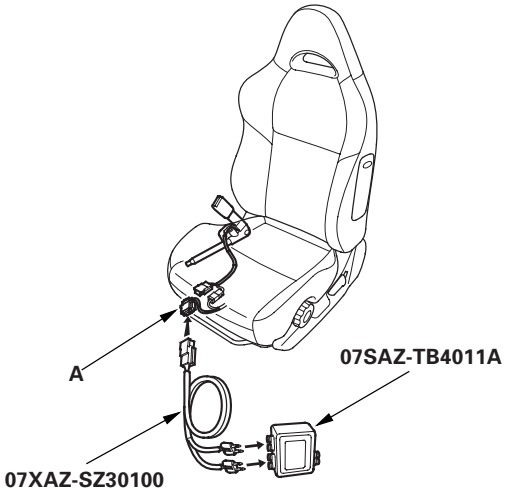

5. Connect the SRS inflator simulator (2 Ω connectors) and the simulator lead F to the floor wire harness 4P connector.

6. Reconnect the battery negative cable.

7. Erase the DTC memory.

8. Read the DTC.

   Is DTC 21-4 indicated?

   YES—Go to step 9.

   NO—Short to power in the driver's seat belt buckle tensioner; replace the driver's seat belt buckle (see page 23-4). ■

9. Disconnect the battery negative cable, and wait for 3 minutes.

10. Disconnect both side airbag 2P connectors (A) and the front passenger's seat belt buckle tensioner 4P connector (B).

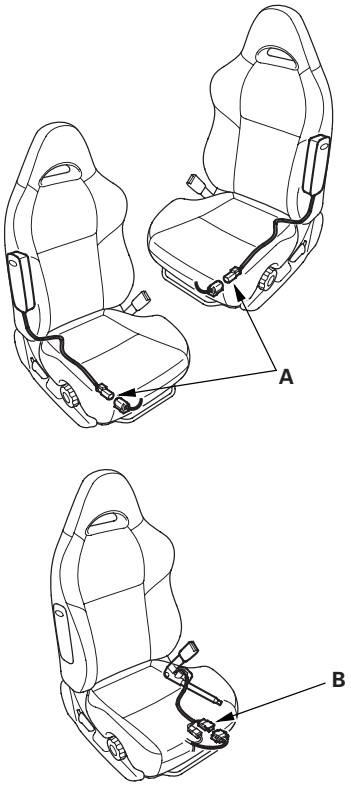

(cont'd)

DTC Troubleshooting (cont'd)

11. Disconnect SRS unit connector B (18P) from the SRS unit.

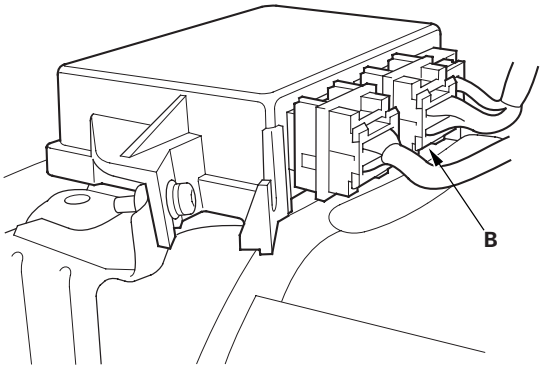

12. Disconnect the simulator lead from the floor wire harness 4P connector.

13. Reconnect the battery negative cable.

14. Turn the ignition switch ON (II).

15. Check for voltage between the No. 1 terminal of SRS unit connector B (18P) and body ground, and between the No. 10 terminal and body ground. There should be 0.5 V or less.

SRS UNIT CONNECTOR B (18P)

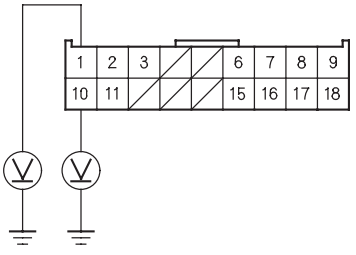

Wire side of female terminals

Is the voltage as specified?

YES—Faulty SRS unit; replace the SRS unit (see page 23-141).■

NO—Short to power in the floor wire harness; replace the floor wire harness.■

DTC 21-5: Short to Ground in Driver's Seat Belt Buckle Tensioner

Special Tools Required
- SRS inflator simulator 07SAZ-TB4011A
- SRS simulator lead F 07XAZ-SZ30100

1. Erase the DTC memory (see page 23-23).

2. Turn the ignition switch ON (II), and check that the SRS indicator comes on for about 6 seconds and then goes off.

   Does the SRS indicator stay on?

   YES—Go to step 3.

   NO—Intermittent failure, system is OK at this time. Go to Troubleshooting Intermittent Failures (see page 23-24). If another DTC is indicated, go to the DTC Troubleshooting Index.

3. Turn the ignition switch OFF. Disconnect the battery negative cable, and wait for 3 minutes.

4. Disconnect the driver's seat belt buckle tensioner 4P connector from the floor wire harness (A).

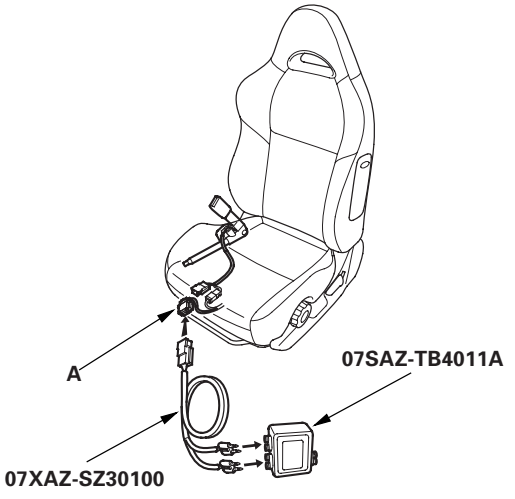

5. Connect the SRS inflator simulator (2 Ω connectors) and the simulator lead F to the floor wire harness 4P connector.

6. Reconnect the battery negative cable.

7. Erase the DTC memory.

8. Read the DTC.

   Is DTC 21-5 indicated?

   YES—Go to step 9.

   NO—Short to ground in the driver's seat belt buckle tensioner; replace the driver's seat belt (see page 23-4). ■

9. Turn the ignition switch OFF. Disconnect the battery negative cable, and wait for 3 minutes.

10. Disconnect both side airbag 2P connectors (A) and the front passenger's seat belt buckle tensioner 4P connector (B).

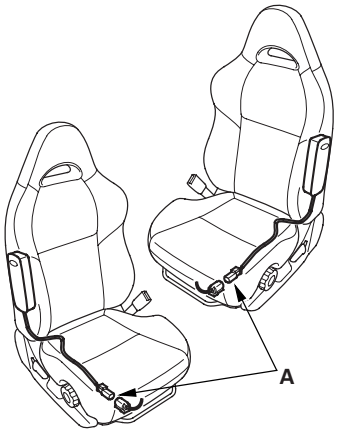

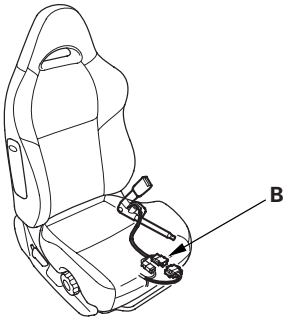

11. Disconnect SRS unit connector B (18P) from the SRS unit.

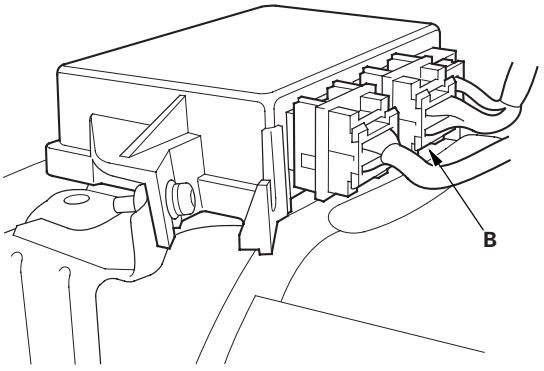

12. Disconnect the simulator lead from the floor wire harness 4P connector.

13. Check resistance between the No. 1 terminal of SRS unit connector B (18P) and body ground, and between the No. 10 terminal and body ground. There should be an open circuit or at least 1 MΩ.

SRS UNIT CONNECTOR B (18P)

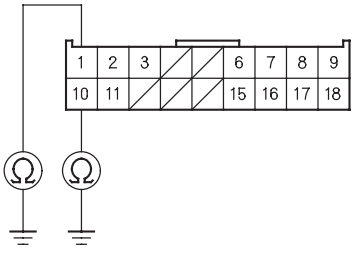

Wire side of female terminals

   Is the resistance as specified?

   YES—Faulty SRS unit; replace the SRS unit (see page 23-141). ■

   NO—Short to ground in the floor wire harness; replace the floor wire harness. ■

DTC Troubleshooting (cont'd)

DTC 4-1: Open or Increased Resistance in Front Passenger's Seat Belt Tensioner

Special Tools Required
- SRS inflator simulator 07SAZ-TB4011A
- SRS simulator lead C 07TAZ-SZ5011A
- SRS simulator lead F 07XAZ-SZ30100

1. Erase the DTC memory (see page 23-23).

2. Turn the ignition switch ON (II), and check that the SRS indicator comes on for about 6 seconds and then goes off.

   Does the SRS indicator stay on?

   YES—Go to step 3.

   NO—Intermittent failure, system is OK at this time. Go to Troubleshooting Intermittent Failures (see page 23-24). If another DTC is indicated, go to the DTC Troubleshooting Index.

3. Turn the ignition switch OFF. Disconnect the battery negative cable, and wait for 3 minutes.

4. Disconnect the front passenger's seat belt tensioner 2P connector from the floor wire harness (A).

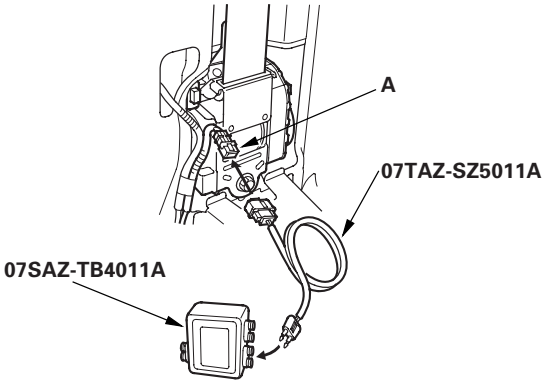

5. Connect the SRS inflator simulator (2 Ω connector) and the simulator lead C to the floor wire harness 2P connector.

6. Reconnect the battery negative cable.

7. Erase the DTC memory.

8. Read the DTC.

   Is DTC 4-1 indicated?

   YES—Go to step 9.

   NO—Open or increased resistance in the front passenger's seat belt tensioner; replace the front passenger's seat belt (see page 23-4). ■

9. Turn the ignition switch OFF. Disconnect the battery negative cable, and wait for 3 minutes.

10. Disconnect the floor wire harness 4P connector (A) from the dashboard wire harness C504.

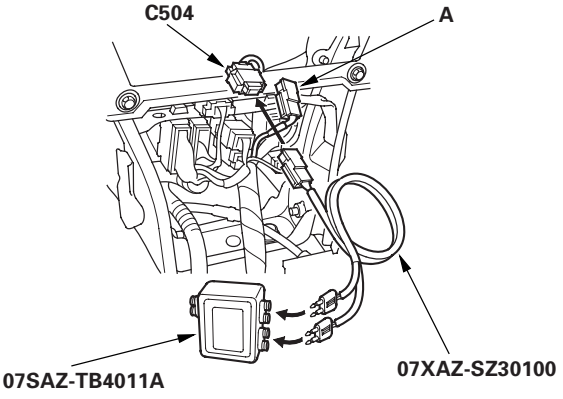

11. Connect the SRS inflator simulator (2 Ω connectors) and the simulator lead F to the dashboard wire harness 4P connector C504.

12. Reconnect the battery negative cable.

13. Erase the DTC memory.

14. Read the DTC.

    Is DTC 4-1 indicated?

    YES—Go to step 15.

    NO—Open or increased resistance in the floor wire harness; replace the floor wire harness. ■

15. Turn the ignition switch OFF. Disconnect the battery negative cable, and wait for 3 minutes.

16. Disconnect the driver's airbag connector (A), front passenger's airbag connector (B), and driver's seat belt tensioner connector (C).

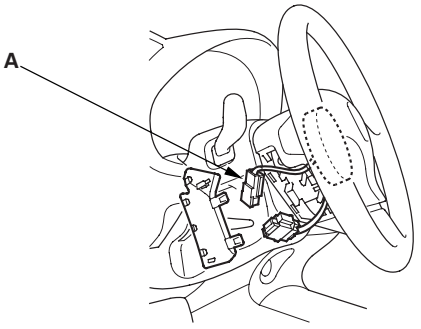

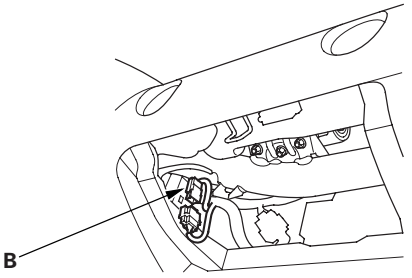

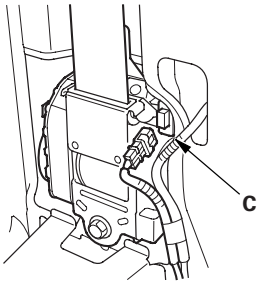

17. Disconnect SRS unit connector A (18P) from the SRS unit. Do not disconnect the simulator lead from the dashboard wire harness.

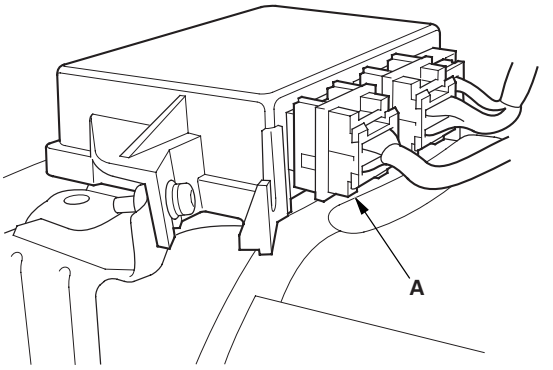

18. Check resistance between the No. 9 terminal and the No. 18 terminal of SRS unit connector A (18P). There should be 2.0—3.0 Ω.

SRS UNIT CONNECTOR A (18P)

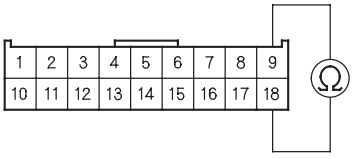

Wire side of female terminals

Is the resistance as specified?

YES—Faulty SRS unit or poor connection at SRS unit connector A (18P) and the SRS unit. Check the connection; if the connection is OK, replace the SRS unit (see page 23-141).■

NO—Open or increased resistance in the dashboard wire harness; replace the dashboard wire harness.■

DTC Troubleshooting (cont'd)

DTC 4-3: Short to Another Wire or Decreased Resistance in Front Passenger's Seat Belt Tensioner

Special Tools Required
- SRS inflator simulator 07SAZ-TB4011A
- SRS simulator lead C 07TAZ-SZ5011A
- SRS simulator lead F 07XAZ-SZ30100

1. Erase the DTC memory (see page 23-23).

2. Turn the ignition switch ON (II), and check that the SRS indicator comes on for about 6 seconds and then goes off.

   Does the SRS indicator stay on?

   YES—Go to step 3.

   NO—Intermittent failure, system is OK at this time. Go to Troubleshooting Intermittent Failures (see page 23-24). If another DTC is indicated, go to the DTC Troubleshooting Index.

3. Turn the ignition switch OFF. Disconnect the battery negative cable, and wait for 3 minutes.

4. Disconnect the front passenger's seat belt tensioner 2P connector from the floor wire harness (A).

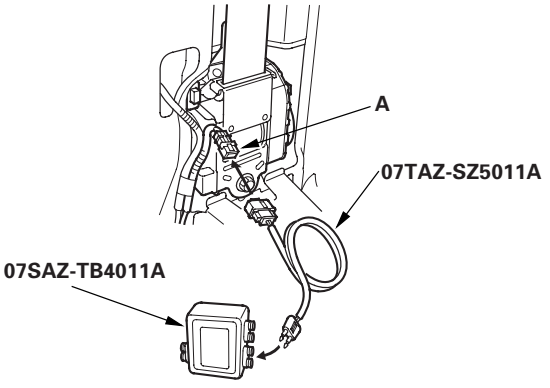

5. Connect the SRS inflator simulator (2 Ω connector) and the simulator lead C to the floor wire harness 2P connector.

6. Reconnect the battery negative cable.

7. Erase the DTC memory.

8. Read the DTC.

   Is DTC 4-3 indicated?

   YES—Go to step 9.

   NO—Short in the front passenger's seat belt tensioner; replace the front passenger's seat belt (see page 23-4). ■

9. Turn the ignition switch OFF. Disconnect the battery negative cable, and wait for 3 minutes.

10. Disconnect the floor wire harness 4P connector (A) from the dashboard wire harness C504.

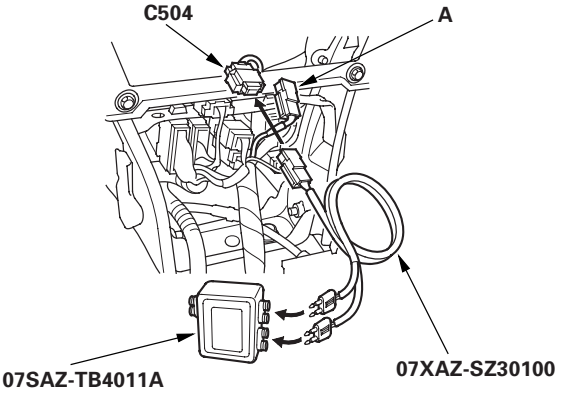

11. Connect the SRS inflator simulator (2 Ω connectors) and the simulator lead F to the dashboard wire harness 4P connector C504.

12. Reconnect the battery negative cable.

13. Erase the DTC memory.

14. Read the DTC.

    Is DTC 4-3 indicated?

    YES—Go to step 15.

    NO—Short in the floor wire harness; replace the floor wire harness. ■

15. Turn the ignition switch OFF. Disconnect the battery negative cable, and wait for 3 minutes.

16. Disconnect the driver's airbag connector (A), front passenger's airbag connector (B), and driver's seat belt tensioner connector (C).

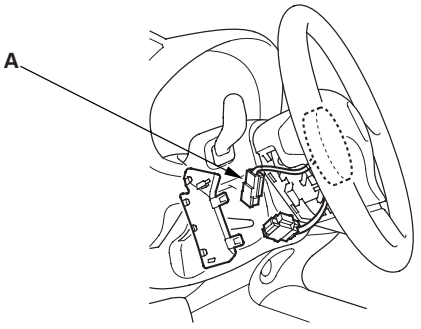

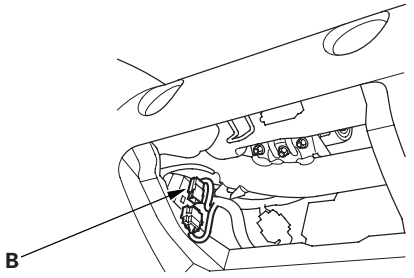

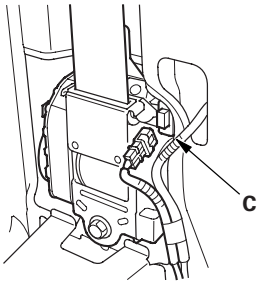

17. Disconnect SRS unit connector A (18P) from the SRS unit.

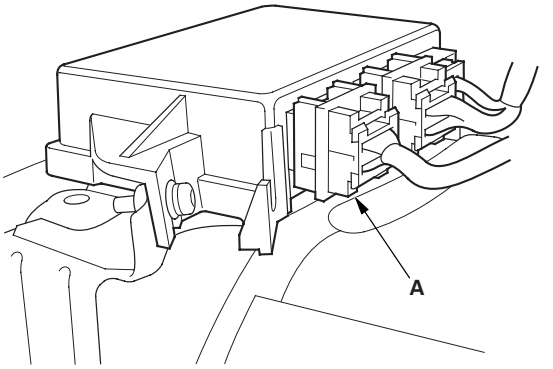

18. Disconnect the simulator lead from the dashboard wire harness 4P connector.

19. Check resistance between the No. 9 terminal and the No. 18 terminal of SRS unit connector A (18P). There should be an open circuit or at least 1 MΩ.

SRS UNIT CONNECTOR A (18P)

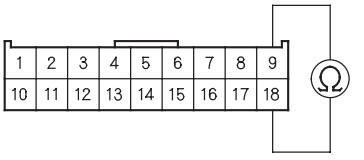

Wire side of female terminals

Is the resistance as specified?

YES—Faulty SRS unit; replace the SRS unit (see page 23-141). ■

NO—Short in the dashboard wire harness; replace the dashboard wire harness. ■

DTC Troubleshooting (cont'd)

DTC 4-4: Short to Power in Front Passenger's Seat Belt Tensioner

Special Tools Required
- SRS inflator simulator 07SAZ-TB4011A
- SRS simulator lead C 07TAZ-SZ5011A
- SRS simulator lead F 07XAZ-SZ30100

1. Erase the DTC memory (see page 23-23).

2. Turn the ignition switch ON (II), and check that the SRS indicator comes on for about 6 seconds and then goes off.

   Does the SRS indicator stay on?

   YES—Go to step 3.

   NO—Intermittent failure, system is OK at this time. Go to Troubleshooting Intermittent Failures (see page 23-24). If another DTC is indicated, go to the DTC Troubleshooting Index.

3. Turn the ignition switch OFF. Disconnect the battery negative cable, and wait for 3 minutes.

4. Disconnect the front passenger's seat belt tensioner 2P connector from the floor wire harness (A).

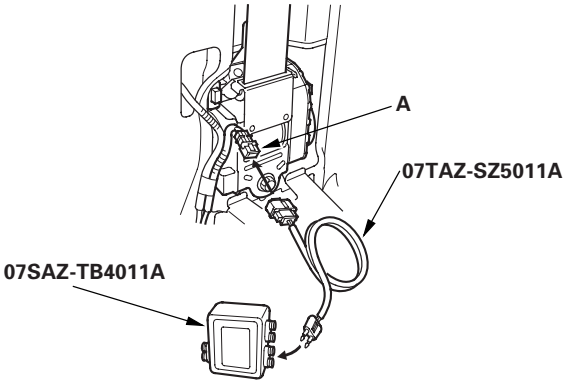

5. Connect the SRS inflator simulator (2 Ω connector) and the simulator lead C to the floor wire harness 2P connector.

6. Reconnect the battery negative cable.

7. Erase the DTC memory.

8. Read the DTC.

   Is DTC 4-4 indicated?

   YES—Go to step 9.

   NO—Short to power in the front passenger's seat belt tensioner; replace the front passenger's seat belt (see page 23-4). ■

9. Disconnect the battery negative cable, and wait for 3 minutes.

10. Disconnect the floor wire harness 4P connector (A) from the dashboard wire harness C504.

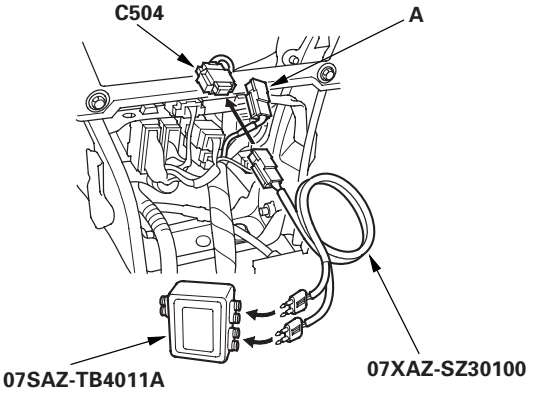

11. Connect the SRS inflator simulator (2 Ω connectors) and the simulator lead F to the dashboard wire harness 4P connector C504.

12. Reconnect the battery negative cable.

13. Erase the DTC memory.

14. Read the DTC.

    Is DTC 4-4 indicated?

    YES—Go to step 15.

    NO—Short to power in the floor wire harness; replace the floor wire harness. ■

15. Turn the ignition switch OFF. Disconnect the battery negative cable, and wait for 3 minutes.

16. Disconnect the driver's airbag connector (A), front passenger's airbag connector (B), and driver's seat belt tensioner connector (C).

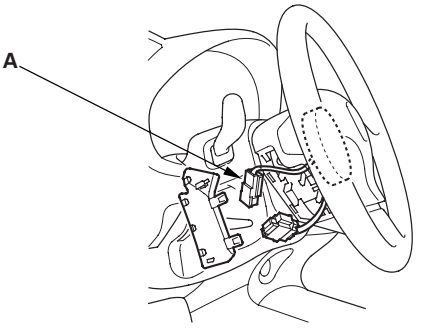

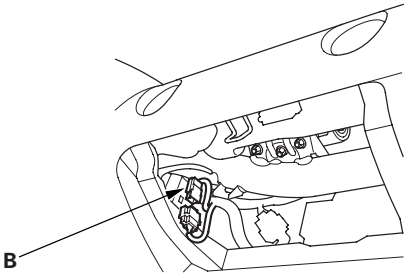

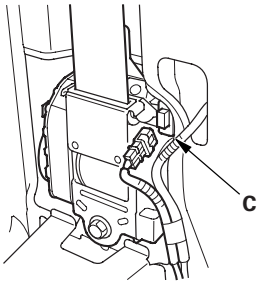

17. Disconnect SRS unit connector A (18P) from the SRS unit.

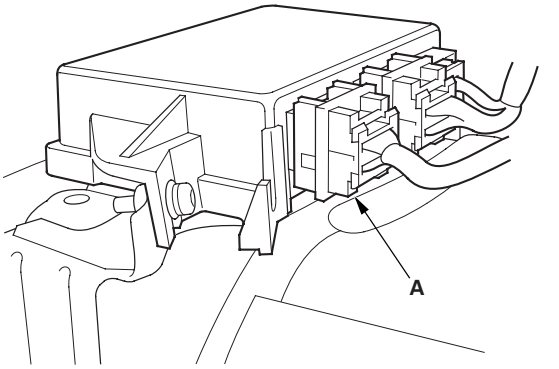

18. Disconnect the simulator lead from the dashboard wire harness 4P connector.

19. Reconnect the battery negative cable.

20. Turn the ignition switch ON (II).

21. Check for voltage between the No. 9 terminal of SRS unit connector A (18P) and body ground, and between the No. 18 terminal and body ground. There should be 0.5 V or less.

SRS UNIT CONNECTOR A (18P)

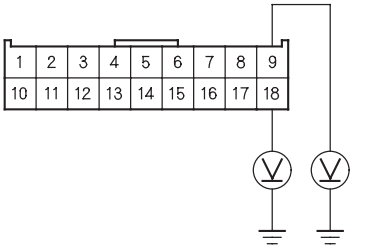

Wire side of female terminals

Is the voltage as specified?

YES—Faulty SRS unit; replace the SRS unit (see page 23-141). ■

NO—Short to power in the dashboard wire harness; replace the dashboard wire harness. ■

DTC Troubleshooting (cont'd)

DTC 4-5: Short to Ground in Front Passenger's Seat Belt Tensioner

Special Tools Required
- SRS inflator simulator 07SAZ-TB4011A
- SRS simulator lead C 07TAZ-SZ5011A
- SRS simulator lead F 07XAZ-SZ30100

1. Erase the DTC memory (see page 23-23).

2. Turn the ignition switch ON (II), and check that the SRS indicator comes on for about 6 seconds and then goes off.

   Does the SRS indicator stay on?

   YES—Go to step 3.

   NO—Intermittent failure, system is OK at this time. Go to Troubleshooting Intermittent Failures (see page 23-24). If another DTC is indicated, go to the DTC Troubleshooting Index.

3. Turn the ignition switch OFF. Disconnect the battery negative cable, and wait for 3 minutes.

4. Disconnect the front passenger's seat belt tensioner 2P connector from the floor wire harness (A).

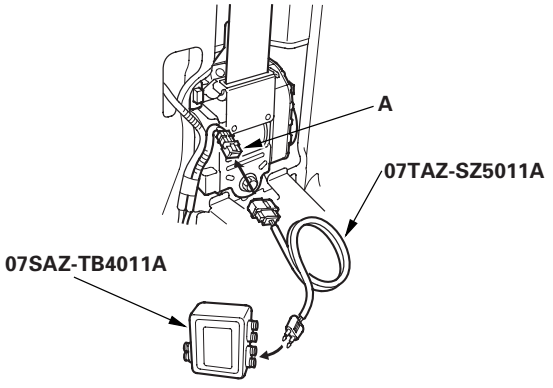

5. Connect the SRS inflator simulator (2 Ω connector) and the simulator lead C to the floor wire harness 2P connector.

6. Reconnect the battery negative cable.

7. Erase the DTC memory.

8. Read the DTC.

   Is DTC 4-5 indicated?

   YES—Go to step 9.

   NO—Short to ground in the front passenger's seat belt tensioner; replace the front passenger's seat belt (see page 23-4). ■

9. Turn the ignition switch OFF. Disconnect the battery negative cable, and wait for 3 minutes.

10. Disconnect the floor wire harness 4P connector (A) from the dashboard wire harness C504.

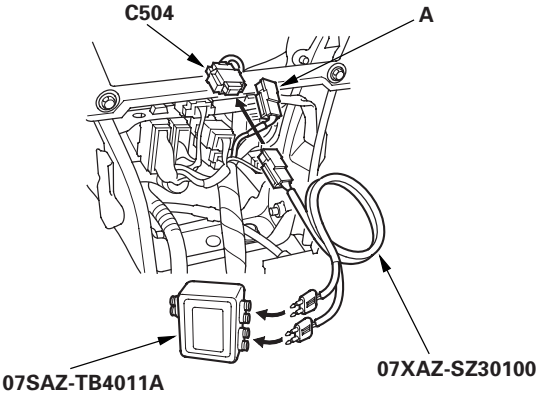

11. Connect the SRS inflator simulator (2 Ω connectors) and the simulator lead F to the dashboard wire harness 4P connector C504.

12. Reconnect the battery negative cable.

13. Erase the DTC memory.

14. Read the DTC.

    Is DTC 4-5 indicated?

    YES—Go to step 15.

    NO—Short to ground in the floor wire harness; replace the floor wire harness. ■

15. Turn the ignition switch OFF. Disconnect the battery negative cable, and wait for 3 minutes.

16. Disconnect the driver's airbag connector (A), front passenger's airbag connector (B), and driver's seat belt tensioner connector (C).

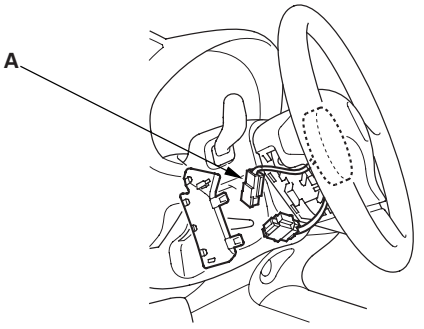

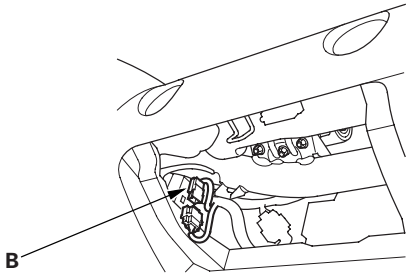

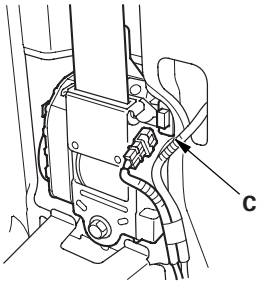

17. Disconnect SRS unit connector A (18P) from the SRS unit.

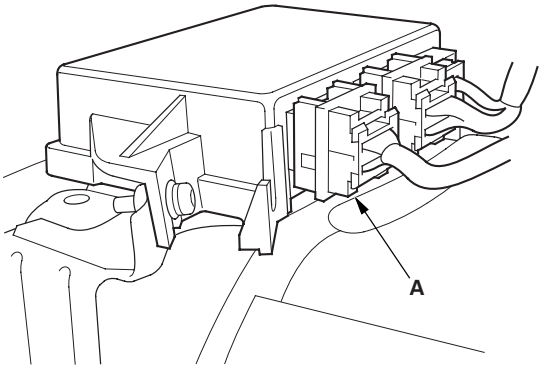

18. Disconnect the simulator lead from the dashboard wire harness 4P connector.

19. Check resistance between the No. 9 terminal of SRS unit connector A (18P) and body ground, and between the No. 18 terminal and body ground. There should be an open circuit or at least 1 MΩ.

SRS UNIT CONNECTOR A (18P)

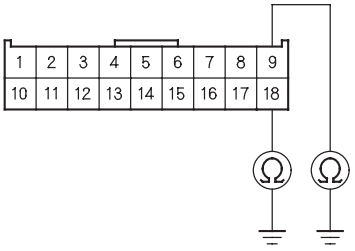

Wire side of female terminals

Is the resistance as specified?

YES—Faulty SRS unit; replace the SRS unit (see page 23-141). ■

NO—Short to ground in the dashboard wire harness; replace the dashboard wire harness. ■

DTC Troubleshooting (cont'd)

DTC 22-1: Open or Increased Resistance in Front Passenger's Seat Belt Buckle Tensioner

Special Tools Required
- SRS inflator simulator 07SAZ-TB4011A
- SRS simulator lead F 07XAZ-SZ30100

1. Erase the DTC memory (see page 23-23).

2. Turn the ignition switch ON (II), and check that the SRS indicator comes on for about 6 seconds and then goes off.

   Does the SRS indicator stay on?

   YES—Go to step 3.

   NO—Intermittent failure, system is OK at this time. Go to Troubleshooting Intermittent Failures (see page 23-24). If another DTC is indicated, go to the DTC Troubleshooting Index.

3. Turn the ignition switch OFF. Disconnect the battery negative cable, and wait for 3 minutes.

4. Disconnect the front passenger's seat belt buckle tensioner 4P connector (A) from the floor wire harness.

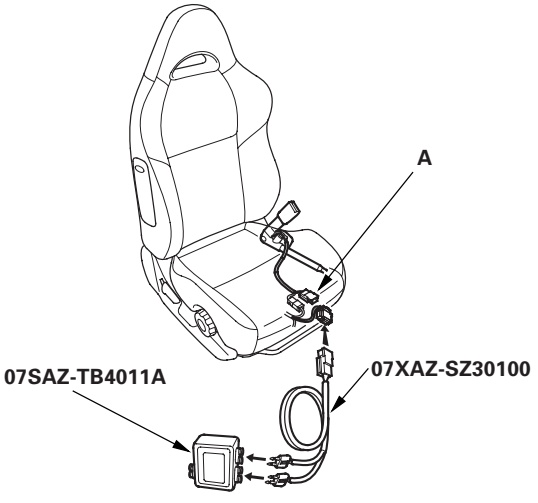

5. Connect the SRS inflator simulator (2 Ω connectors) and the simulator lead F to the floor wire harness 4P connector.

6. Reconnect the battery negative cable.

7. Erase the DTC memory.

8. Read the DTC.

   Is DTC 22-1 indicated?

   YES—Go to step 9.

   NO—Open or increased resistance in the front passenger's seat belt buckle tensioner; replace the front passenger's seat belt buckle (see page 23-5). ■

9. Turn the ignition switch OFF. Disconnect the battery negative cable, and wait for 3 minutes.

10. Disconnect both side airbag 2P connectors (A) and the driver's seat belt buckle tensioner 4P connector (B).

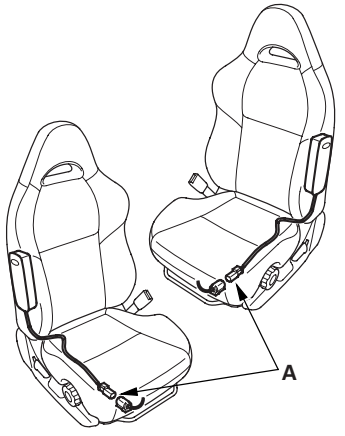

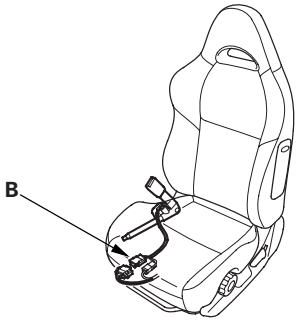

11. Disconnect SRS unit connector B (18P) from the SRS unit. Do not disconnect the simulator lead from the floor wire harness 4P connector.

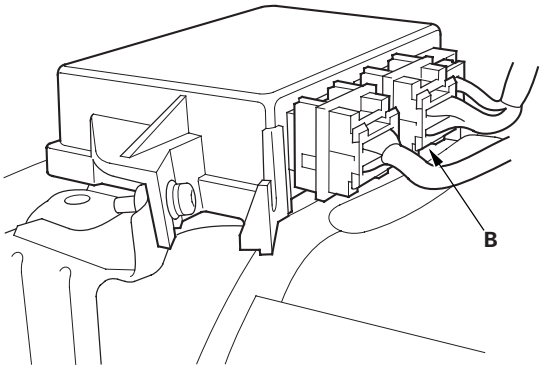

12. Check resistance between the No. 2 and No. 11 terminals of SRS unit connector B (18P). There should be 2.0—3.0 Ω.

SRS UNIT CONNECTOR B (18P)

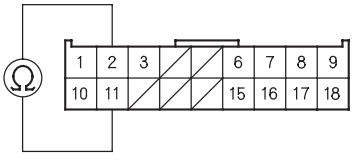

Wire side of female terminals

Is the resistance as specified?

YES—Faulty SRS unit or poor connection at SRS unit connector B (18P) and at the SRS unit. Check the connection; if the connection is OK, replace the SRS unit (see page 23-141). ■

NO—Open or increased resistance in the floor wire harness; replace the floor wire harness. ■

DTC 22-3: Short to Another Wire or Decreased Resistance in Front Passenger's Seat Belt Buckle Tensioner

Special Tools Required
- SRS inflator simulator 07SAZ-TB4011A
- SRS simulator lead F 07XAZ-SZ30100

1. Erase the DTC memory (see page 23-23).

2. Turn the ignition switch ON (II), and check that the SRS indicator comes on for about 6 seconds and then goes off.

   Does the SRS indicator stay on?

   YES—Go to step 3.

   NO—Intermittent failure, system is OK at this time. Go to Troubleshooting Intermittent Failures (see page 23-24). If another DTC is indicated, go to the DTC Troubleshooting Index.

3. Turn the ignition switch OFF. Disconnect the battery negative cable, and wait for 3 minutes.

4. Disconnect the front passenger's seat belt buckle tensioner 4P connector (A) from the floor wire harness.

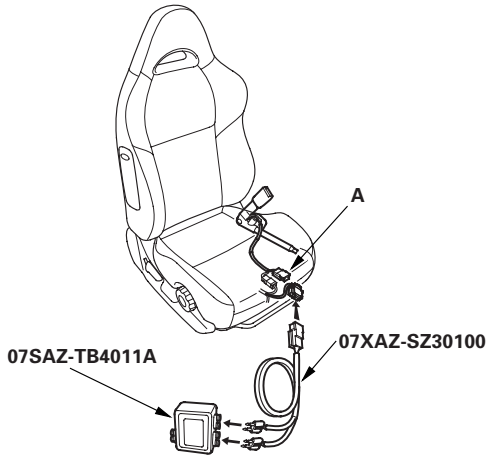

5. Connect the SRS inflator simulator (2 Ω connectors) and the simulator lead F to the floor wire harness 4P connector.

6. Reconnect the battery negative cable.

7. Erase the DTC memory.

(cont'd)

DTC Troubleshooting (cont'd)

8. Read the DTC.

   Is DTC 22-3 indicated?

   YES—Go to step 9.

   NO—Short in the front passenger's seat belt buckle tensioner; replace the front passenger's seat belt buckle (see page 23-5). ■

9. Turn the ignition switch OFF. Disconnect the battery negative cable, and wait for 3 minutes.

10. Disconnect both side airbag 2P connectors (A) and the driver's seat belt buckle tensioner 4P connector (B).

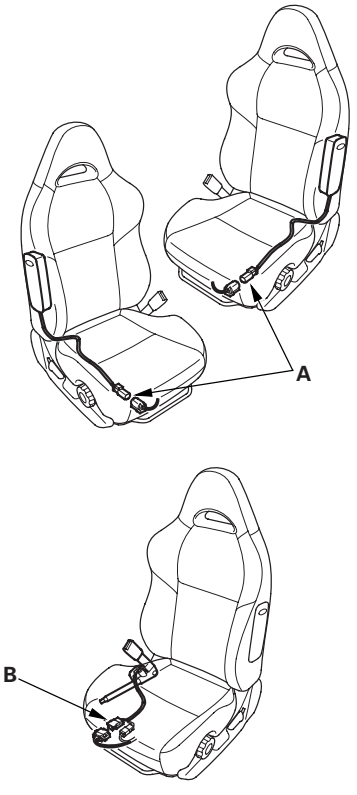

11. Disconnect SRS unit connector B (18P) from the SRS unit.

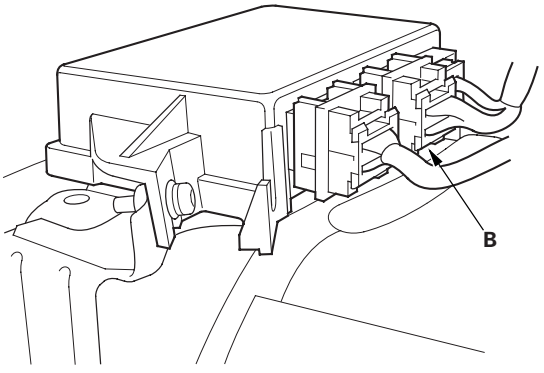

12. Disconnect the simulator lead from the floor wire harness 4P connector.

13. Check resistance between the No. 2 and No. 11 terminals of SRS unit connector B (18P). There should be an open circuit or at least 1 MΩ.

SRS UNIT CONNECTOR B (18P)

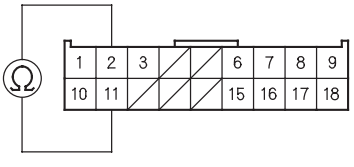

Wire side of female terminals

Is the resistance as specified?

YES—Faulty SRS unit; replace the SRS unit (see page 23-141). ■

NO—Short in the floor wire harness; replace the floor wire harness. ■

DTC 22-4: Short to Power in Front Passenger's Seat Belt Buckle Tensioner

Special Tools Required
- SRS inflator simulator 07SAZ-TB4011A
- SRS simulator lead F 07XAZ-SZ30100

1. Erase the DTC memory (see page 23-23).

2. Turn the ignition switch ON (II), and check that the SRS indicator comes on for about 6 seconds and then goes off.

   Does the SRS indicator stay on?

   YES—Go to step 3.

   NO—Intermittent failure, system is OK at this time. Go to Troubleshooting Intermittent Failures (see page 23-24). If another DTC is indicated, go to the DTC Troubleshooting Index.

3. Turn the ignition switch OFF. Disconnect the battery negative cable, and wait for 3 minutes.

4. Disconnect the front passenger's seat belt buckle tensioner 4P connector (A) from the floor wire harness.

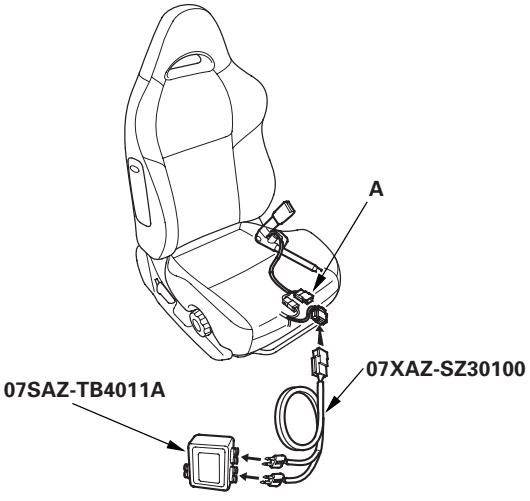

5. Connect the SRS inflator simulator (2 Ω connectors) and the simulator lead F to the floor wire harness 4P connector.

6. Reconnect the battery negative cable.

7. Erase the DTC memory.

8. Read the DTC.

   Is DTC 22-4 indicated?

   YES—Go to step 9.

   NO—Short to power in the front passenger's seat belt buckle tensioner; replace the front passenger's seat belt buckle (see page 23-5). ■

9. Turn the ignition switch OFF. Disconnect the battery negative cable, and wait for 3 minutes.

10. Disconnect both side airbag 2P connectors (A) and the driver's seat belt buckle tensioner 4P connector (B).

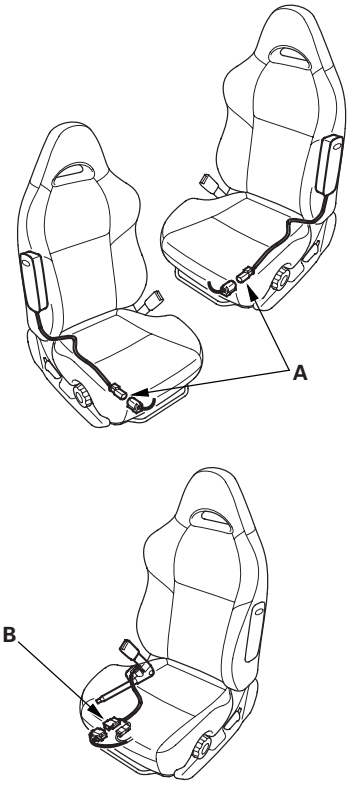

(cont'd)

DTC Troubleshooting (cont'd)

11. Disconnect SRS unit connector B (18P) from the SRS unit.

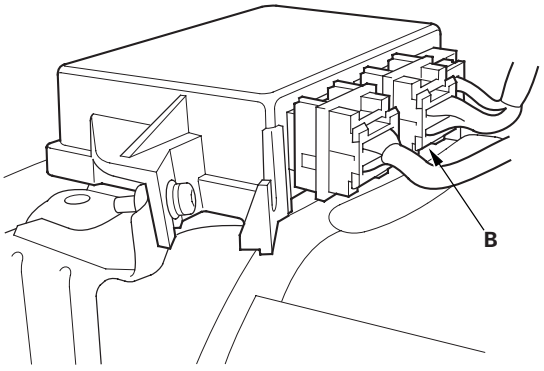

12. Disconnect the simulator lead from the floor wire harness 4P connector.

13. Reconnect the battery negative cable.

14. Turn the ignition switch ON (II).

15. Check for voltage between the No. 2 terminal of SRS unit connector B (18P) and body ground, and between the No. 11 terminal and body ground. There should be 0.5 V or less.

SRS UNIT CONNECTOR B (18P)

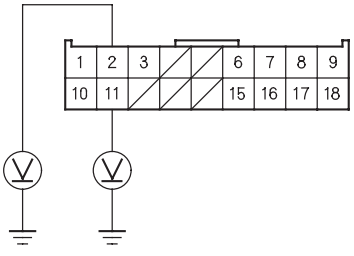

Wire side of female terminals

Is the voltage as specified?

YES—Faulty SRS unit; replace the SRS unit (see page 23-141).■

NO—Short to power in the floor wire harness; replace the floor wire harness.■

DTC 22-5: Short to Ground in Front Passenger's Seat Belt Buckle Tensioner

Special Tools Required
- SRS inflator simulator 07SAZ-TB4011A
- SRS simulator lead F 07XAZ-SZ30100

1. Erase the DTC memory (see page 23-23).

2. Turn the ignition switch ON (II), and check that the SRS indicator comes on for about 6 seconds and then goes off.

   Does the SRS indicator stay on?

   YES—Go to step 3.

   NO—Intermittent failure, system is OK at this time. Go to Troubleshooting Intermittent Failures (see page 23-24). If another DTC is indicated, go to the DTC Troubleshooting Index.

3. Turn the ignition switch OFF. Disconnect the battery negative cable, and wait for 3 minutes.

4. Disconnect the front passenger's seat belt buckle tensioner 4P connector (A) from the floor wire harness.

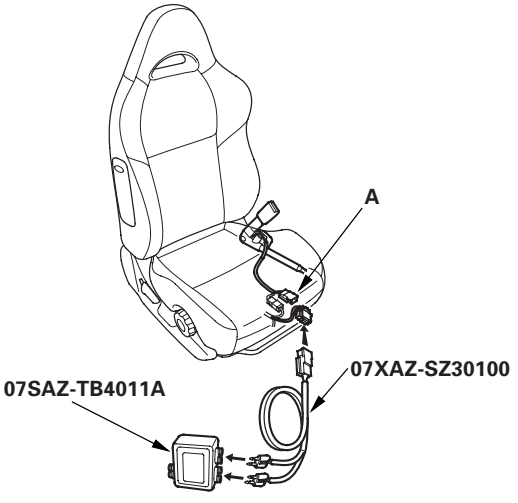

5. Connect the SRS inflator simulator (2 Ω connectors) and the simulator lead F to the floor wire harness 4P connector.

6. Reconnect the battery negative cable.

7. Erase the DTC memory.

8. Read the DTC.

   Is DTC 22-5 indicated?

   YES—Go to step 9.

   NO—Short to ground in the front passenger's seat belt buckle tensioner; replace the front passenger's seat belt buckle (see page 23-5). ■

9. Turn the ignition switch OFF. Disconnect the battery negative cable, and wait for 3 minutes.

10. Disconnect both side airbag 2P connectors (A) and the driver's seat belt buckle tensioner 4P connector (B).

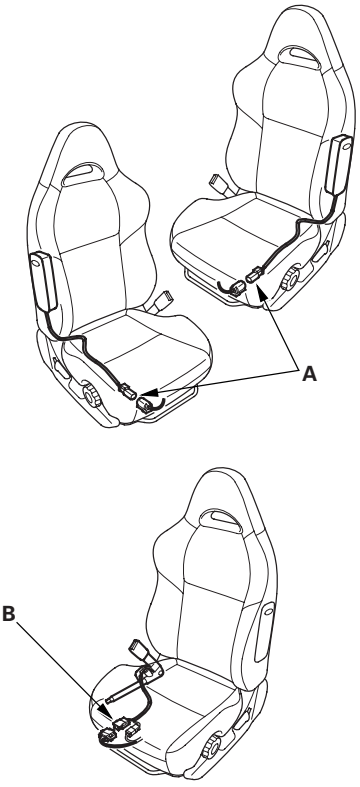

11. Disconnect SRS unit connector B (18P) from the SRS unit.

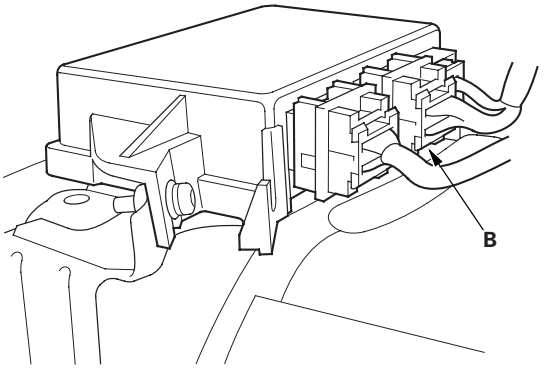

12. Disconnect the simulator lead from the floor wire harness 4P connector.

13. Check resistance between the No. 2 terminal of SRS unit connector B (18P) and body ground, and between the No. 11 terminal and body ground. There should be an open circuit or at least 1 MΩ.

SRS UNIT CONNECTOR B (18P)

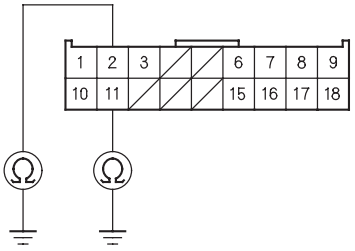

Wire side of female terminals

   Is the resistance as specified?

   YES—Faulty SRS unit; replace the SRS unit (see page 23-141). ■

   NO—Short to ground in the floor wire harness; replace the floor wire harness. ■

DTC Troubleshooting (cont'd)

DTC 5-1, 5-2, 5-4, 5-8, 6-3, 6-4, 6-7, 6-8, 7-1, 7-2, 7-3, 8-1, 8-2, 8-3, 8-4, 8-5, 8-6, 8-7, 8-8: Internal Failure of the SRS Unit

NOTE: Before troubleshooting any of these DTCs, check the battery/system voltage. If the voltage is low, repair the charging system or replace the battery before troubleshooting the SRS. If the battery/system voltage is now OK, ask the customer if the battery ever went dead. A dead battery may trigger one of these DTCs.

1. Erase the DTC memory (see page 23-23).

2. Turn the ignition switch ON (II), and check that the SRS indicator comes on for about 6 seconds and then goes off.

   Does the SRS indicator stay on?

   YES—Replace the SRS unit (see page 23-141). ■

   NO—Intermittent failure, system is OK at this time. Go to Troubleshooting Intermittent Failures (see page 23-24). If another DTC is indicated, go to the DTC Troubleshooting Index.

DTC 10-1, 10-2, 10-3, 10-4, 10-5, 10-6, 10-7: Airbags, Side Airbags and/or Seat Belt and Seat Belt Buckle Tensioners Deployed

The SRS unit must be replaced after any airbags have deployed (see page 23-141). ■

DTC 9-1: Internal Failure of the SRS Unit

1. Turn the ignition switch OFF. Disconnect the battery negative cable, and wait for 3 minutes.

2. Disconnect SRS unit connector C (8P) from the SRS unit.

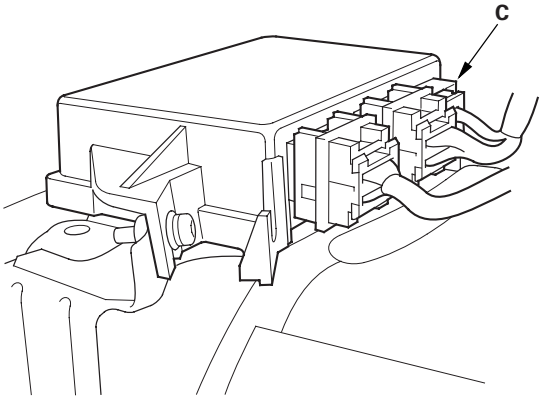

3. Remove the gauge assembly (see page 22-74). Disconnect gauge assembly connector A (22P*1) or (20P*2) from the gauge assembly.
   * 1: '02-04 models
   * 2: '05-06 models

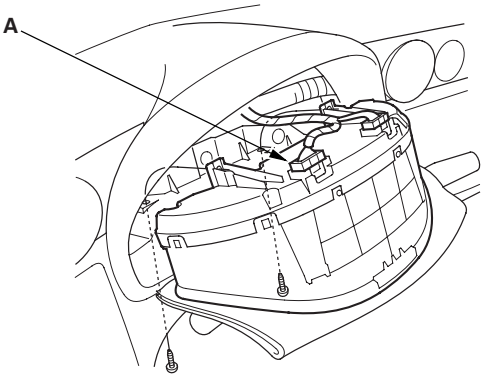

4. Check resistance between the No. 5 terminal of SRS unit connector C (8P) and body ground. There should be an open circuit or at least 1 MΩ.

SRS UNIT CONNECTOR C (8P)

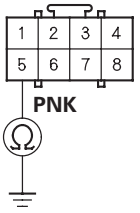

Wire side of female terminals

Is the resistance as specified?

YES—Go to step 5.

NO—Short to ground in the PNK wire of dashboard wire harness or floor wire harness. Replace the faulty harness.■

(cont'd)

DTC Troubleshooting (cont'd)

5. Reconnect the gauge assembly connector A (22P*1) or (20P*2) to the gauge assembly.
   * 1: '02-04 models
   * 2: '05-06 models

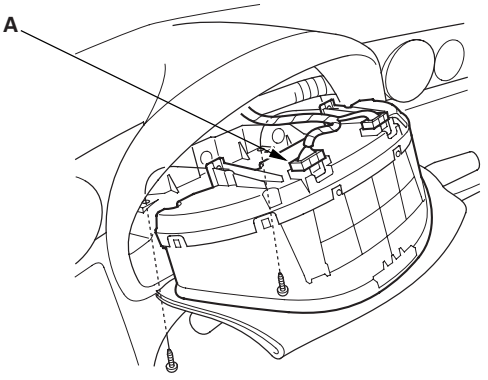

6. Check resistance between the No. 5 terminal of SRS unit connector C (8P) and body ground. There should be 500 Ω or more.

SRS UNIT CONNECTOR C (8P)

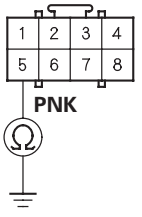

Wire side of female terminals

Is the resistance as specified?

YES—Faulty SRS unit; replace the SRS unit (see page 23-141).■

NO—Faulty SRS indicator circuit in the gauge assembly; replace the gauge assembly.■

DTC 9-2: Faulty Power Supply (VB line)

1. Check the No. 13 (10 A) fuse in the under-dash fuse/relay box.

   Is the fuse OK?

   YES—Go to step 5.

   NO—Go to step 2.

2. Replace the No. 13 (10 A) fuse.

3. Turn the ignition switch ON (II), and wait for 30 seconds. Then turn the ignition switch OFF.

4. Check the No. 13 (10 A) fuse.

   Is the fuse OK?

   YES—The system is OK at this time. ■

   NO—Short in the under-dash fuse/relay box No. 13 (10 A) fuse circuit. ■

5. Disconnect the battery negative cable, and wait for 3 minutes.

6. Disconnect the driver's airbag 4P connector (see page 23-18).

7. Disconnect the front passenger's airbag 4P connector (see page 23-18).

8. Disconnect both seat belt tensioner 2P connectors (see page 23-19).

9. Disconnect SRS unit connector A (18P) from the SRS unit.

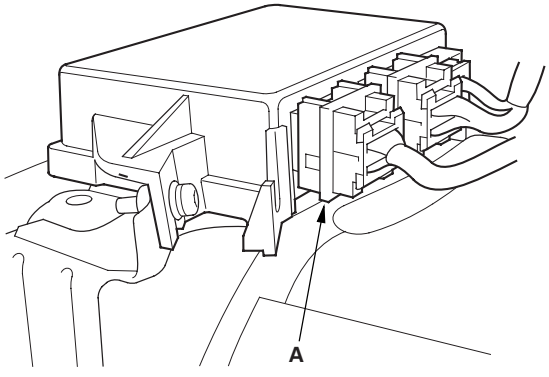

10. Reconnect the battery negative cable.

11. Connect a voltmeter between the No. 3 terminal of SRS unit connector A (18P) and body ground. Turn the ignition switch ON (II), and measure the voltage. There should be battery voltage.

SRS UNIT CONNECTOR A (18P)

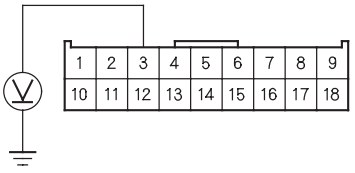

Wire side of female terminals

Is there battery voltage?

YES—Faulty SRS unit or poor connection at the SRS unit connector A (18P); check the connection. If the connection is OK, replace the SRS unit (see page 23-141).

NO—Go to step 12.

12. Turn the ignition switch OFF.

13. Disconnect the battery negative cable, and wait for 3 minutes.

14. Disconnect dashboard wire harness B connector S from the under-dash fuse/relay box (see page 22-55).

(cont'd)

DTC Troubleshooting (cont'd)

15. Check resistance between the No. 3 terminal of SRS unit connector A (18P) and the No. 2 terminal of dashboard wire harness B connector S. There should be 0—1.0 Ω.

DASHBOARD WIRE HARNESS B CONNECTOR S

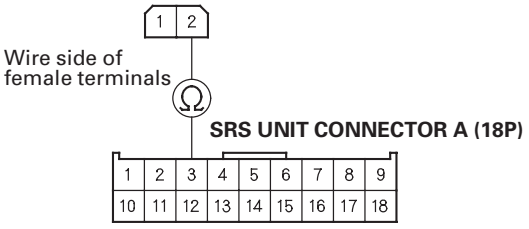

Wire side of female terminals

Is the resistance as specified?

YES—Open in the under-dash fuse/relay box or poor connection at the dashboard wire harness connector S; check the connection. If the connection is OK, replace the under-dash fuse/relay box (see page 22-60). ■

NO—Open in dashboard wire harness B; replace dashboard wire harness B. ■

DTC 13-1, 13-2: Internal Failure of the Driver's Side Impact Sensor

1. Erase the DTC memory (see page 23-23).

2. Turn the ignition switch ON (II), and check that the SRS indicator comes on for about 6 seconds and then goes off.

   Does the SRS indicator stay on, and is DTC 13-1 or 13-2 indicated?

   YES—Replace the driver's side impact sensor (see page 23-142). ■

   NO—Intermittent failure, system is OK at this time. Go to Troubleshooting Intermittent Failures (see page 23-24). If another DTC is indicated, go to the DTC Troubleshooting Index.

DTC 14-1, 14-2: Internal Failure of the Front Passenger's Side Impact Sensor

1. Erase the DTC memory (see page 23-23).

2. Turn the ignition switch ON (II), and check that the SRS indicator comes on for about 6 seconds and then goes off.

   Does the SRS indicator stay on, and is DTC 14-1 or 14-2 indicated?

   YES—Replace the front passenger's side impact sensor (see page 23-142). ■

   NO—Intermittent failure, system is OK at this time. Go to Troubleshooting Intermittent Failures (see page 23-24). If another DTC is indicated, go to the DTC Troubleshooting Index.

DTC Troubleshooting (cont'd)

DTC 9-3: Faulty Driver's Seat Belt Buckle Switch

1. Erase the DTC memory (see page 23-23).

2. Turn the ignition switch ON (II), then buckle and unbuckle the driver's seat belt several times.

3. Read the DTC.

   Is DTC 9-3 indicated?

   YES—Go to step 4.

   NO—Intermittent failure, system is OK at this time. Go to Troubleshooting Intermittent Failures (see page 23-24). If another DTC is indicated, go to the DTC Troubleshooting Index.

4. Turn the ignition switch OFF.

5. Disconnect the floor wire harness 3P connector (A) from the driver's seat belt buckle switch.

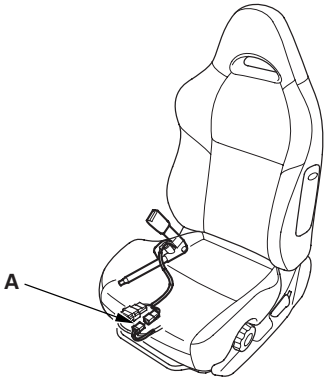

6. Buckle the driver's seat belt.

   - Check resistance between the No. 1 and No. 3 terminals of the driver's seat belt buckle switch 3P connector. There should be 0—1 Ω.
   - Check resistance between the No. 1 and No. 2 terminals of the same connector. There should be an open circuit or at least 1 MΩ.

DRIVER'S SEAT BELT BUCKLE SWITCH 3P CONNECTOR

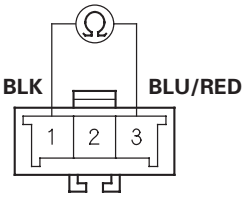

Terminal side of male terminals

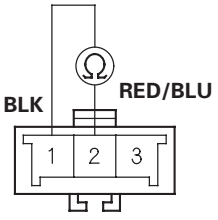

Terminal side of male terminals

Are the resistance as specified?

YES—Go to step 7.

NO—Replace the driver's seat belt buckle assembly (see page 23-4), and clear the DTC. ■

7. Unbuckle the driver's seat belt.

   - Check resistance between the No. 1 and No. 2 terminals of the driver's seat belt buckle switch 3P connector. There should be 0—1 Ω.
   - Check resistance between the No. 1 and No. 3 terminals of the same connector. There should be an open circuit or at least 1 MΩ.

DRIVER'S SEAT BELT BUCKLE SWITCH 3P CONNECTOR

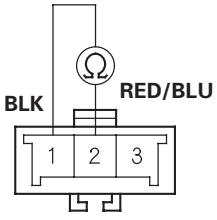

Terminal side of male terminals

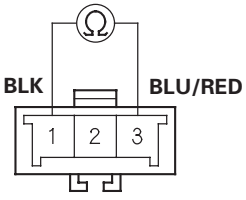

Terminal side of male terminals

Are the resistance as specified?

YES—Go to step 8.

NO—Replace the driver's seat belt buckle assembly (see page 23-4), and clear the DTC. ■

8. Check resistance between the No. 1 terminal of the floor wire harness 3P connector and body ground. There should be 0—1 Ω.

FLOOR WIRE HARNESS 3P CONNECTOR

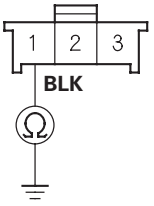

Wire side of female terminals

Is the resistance as specified?

YES—Go to step 9.

NO—Open in floor wire harness or poor ground connection at G501. If G501 is OK, replace the floor wire harness. ■

9. Disconnect the negative cable from the battery.

10. Disconnect the SRS unit connector C (8P) from the SRS unit.

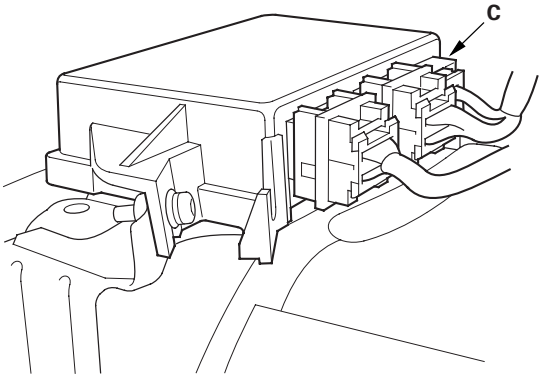

(cont'd)

DTC Troubleshooting (cont'd)

11. Check resistance between the No. 2 terminal of the floor wire harness 3P connector and body ground. There should be an open circuit or at least 1 MΩ.

FLOOR WIRE HARNESS 3P CONNECTOR

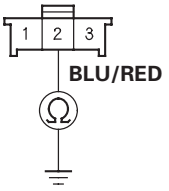

Wire side of female terminals

Is the resistance as specified?

YES—Check the connections at the floor wire harness connector Q (8P) at the under-dash fuse/relay box. If the connections are OK, go to step 12.

NO—Short to ground in the floor wire harness or multiplex control unit. Replace the faulty harness or component.■

12. Check resistance between the No. 3 terminal of the floor wire harness 3P connector and body ground. There should be an open circuit or at least 1 MΩ.

FLOOR WIRE HARNESS 3P CONNECTOR

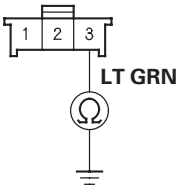

Wire side of female terminals

Is the resistance as specified?

YES—Go to step 13.

NO—Short to ground in the floor wire harness; replace the floor wire harness.■

13. Check resistance between the No. 8 terminal of SRS unit connector C (8P) and the No. 3 terminal of the floor wire harness 3P connector. There should be 0—1 Ω.

FLOOR WIRE HARNESS 3P CONNECTOR **SRS UNIT CONNECTOR C (8P)**

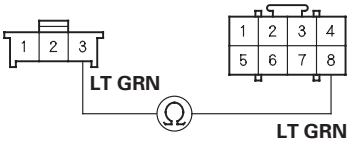

Wire side of female terminals

Is the resistance as specified?

YES—Go to step 14.

NO—Open in floor wire harness; replace the floor wire harness.■

14. Check resistance between the No. 4 terminal of SRS unit connector C (8P) and the No. 2 terminal of the floor wire harness 3P connector. There should be 0—1 Ω.

FLOOR WIRE HARNESS 3P CONNECTOR **SRS UNIT CONNECTOR C (8P)**

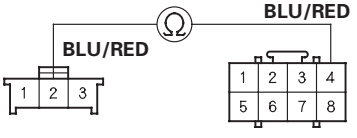

Wire side of female terminals

Is the resistance as specified?

YES—Replace the SRS unit (see page 23-141).■

NO—Open in floor wire harness or multiplex control unit, or poor connection at the floor wire harness, the under-dash fuse/relay box, and the multiplex control unit. Check the connection at the floor wire harness, the under-dash fuse/relay box, and the multiplex control unit. If the connection is OK, replace the faulty harness or part.■

DTC 9-4: Faulty Front Passenger's Seat Belt Buckle Switch

1. Erase the DTC memory (see page 23-23).

2. Turn the ignition switch ON (II), then buckle and unbuckle the front passenger's seat belt several times.

3. Read the DTC.

   Is DTC 9-4 indicated?

   YES—Go to step 4.

   NO—Intermittent failure, system is OK at this time. Go to Troubleshooting Intermittent Failures (see page 23-24). If another DTC is indicated, go to the DTC Troubleshooting Index.

4. Turn the ignition switch OFF.

5. Disconnect the front passenger's seat belt buckle switch 3P connector (A) from the floor wire harness.

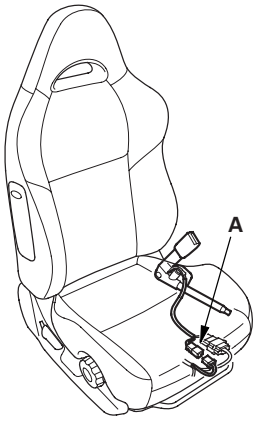

6. Buckle the front passenger's seat belt.

   - Check resistance between the No. 1 and No. 3 terminals of the front passenger's seat belt buckle switch 3P connector. There should be 0—1 Ω.
   - Check resistance between the No. 1 and No. 2 terminals of the same connector. There should be an open circuit, or at least 1 MΩ.

FRONT PASSENGER'S SEAT BELT BUCKLE SWITCH 3P CONNECTOR

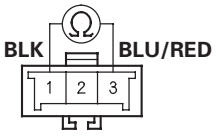

Terminal side of male terminals

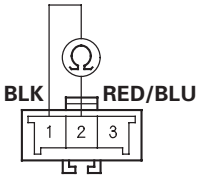

Terminal side of male terminals

Are the resistance as specified?

YES—Go to step 7.

NO—Replace the front passenger's seat belt buckle assembly (see page 23-4), and clear the DTC. ■

(cont'd)

DTC Troubleshooting (cont'd)

7. Unbuckle the front passenger's seat belt.

   - Check resistance between the No. 1 and No. 2 terminals of the front passenger's seat belt buckle switch 3P connector. There should be 0—1 Ω.
   - Check resistance between the No. 1 and No. 3 terminals of the same connector. There should be an open circuit or at least 1 MΩ.

FRONT PASSENGER'S SEAT BELT BUCKLE SWITCH 3P CONNECTOR

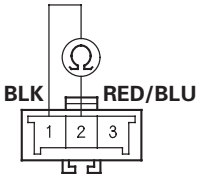

Terminal side of male terminals

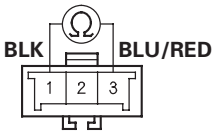

Terminal side of male terminals

Are the resistance as specified?

YES—Go to step 8.

NO—Replace the front passenger's seat belt buckle assembly (see page 23-4), and clear the DTC. ■

8. Check resistance between the No. 1 terminal of the floor wire harness 3P connector and body ground. There should be 0—1 Ω.

FLOOR WIRE HARNESS 3P CONNECTOR

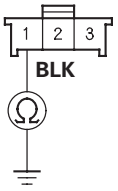

Wire side of female terminals

Is the resistance as specified?

YES—Go to step 9.

NO—Open in floor wire harness or poor ground connection at G501. If G501 is OK, replace the floor wire harness. ■

9. Disconnect the negative cable from the battery.

10. Disconnect SRS unit connector C (8P) from the SRS unit.

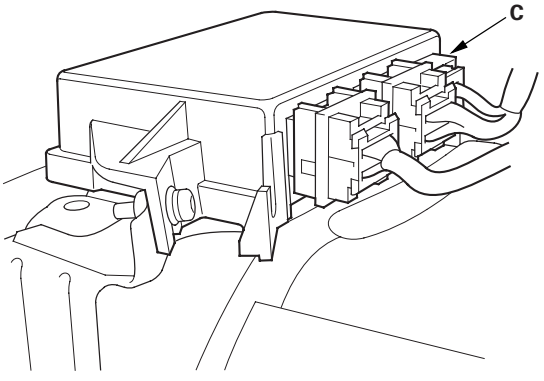

11. Check resistance between the No. 2 terminal of the floor wire harness 3P connector and body ground. There should be an open circuit or at least 1 MΩ.

FLOOR WIRE HARNESS 3P CONNECTOR

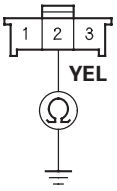

Wire side of female terminals

Is the resistance as specified?

YES—Go to step 12.

NO—Short to ground in the floor wire harness; replace the floor wire harness.■

12. Check resistance between the No. 3 terminal of the floor wire harness 3P connector and body ground. There should be an open circuit or at least 1 MΩ.

FLOOR WIRE HARNESS 3P CONNECTOR

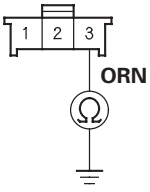

Wire side of female terminals

Is the resistance as specified?

YES—Go to step 13.

NO—Short to ground in the floor wire harness; replace the floor wire harness.■

13. Check resistance between the No. 7 terminal of SRS unit connector C (8P) and the No. 3 terminal of the floor wire harness 3P connector. There should be 0—1 Ω.

FLOOR WIRE HARNESS 3P CONNECTOR **SRS UNIT CONNECTOR C (8P)**

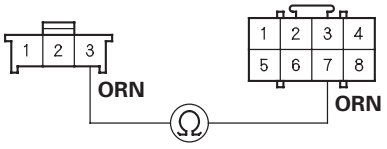

Wire side of female terminals

Is the resistance as specified?

YES—Go to step 14.

NO—Open in floor wire harness or seat subharness (with BOSE sound system); replace the faulty harness.■

14. Check resistance between the No. 3 terminal of SRS unit connector C (8P) and the No. 2 terminal of the floor wire harness 3P connector. There should be 0—1 Ω.

FLOOR WIRE HARNESS 3P CONNECTOR **SRS UNIT CONNECTOR C (8P)**

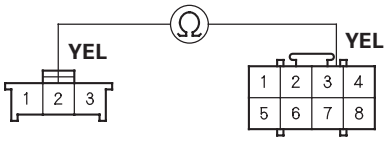

Wire side of female terminals

Is the resistance as specified?

YES—Replace the SRS unit (see page 23-141).■

NO—Open in floor wire harness or the seat subharness (with BOSE sound system); replace the faulty harness.■

DTC Troubleshooting (cont'd)

DTC 9-6: Faulty Left Front Impact Sensor

Special Tools Required
- SRS inflator simulator 07SAZ-TB4011A
- SRS simulator lead H 07YAZ-S3AA100

1. Erase the DTC memory (see page 23-23).

2. Turn the ignition switch ON (II), and check that the SRS indicator comes on for about 6 seconds and then goes off.

   Does the SRS indicator stay on?

   YES—Go to step 3.

   NO—Intermittent failure, system is OK at this time. Go to Troubleshooting Intermittent Failures (see page 23-24). If another DTC is indicated, go to the DTC Troubleshooting Index.

3. Turn the ignition switch OFF. Check the connections between SRS unit connector A (18P) and the SRS unit, between the engine compartment wire harness 2P connector and the left front impact sensor (see page 23-10) and at connector C403.

   Are the connections OK ?

   YES—Go to step 4.

   NO—Repair the poor connections and retest. If DTC 9-6 is still present, go to step 4.

4. Turn the ignition switch OFF. Disconnect the battery negative cable, and wait for 3 minutes.

5. Disconnect the driver's airbag 4P connector from the cable reel (A).

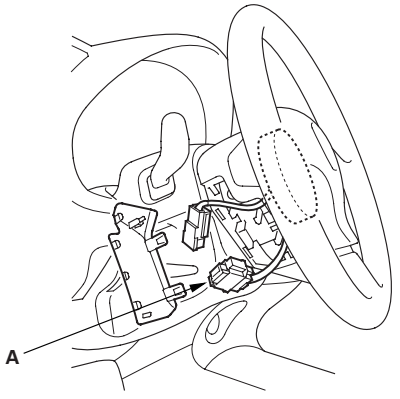

6. Disconnect the front passenger's airbag 4P connector from the dashboard wire harness (A).

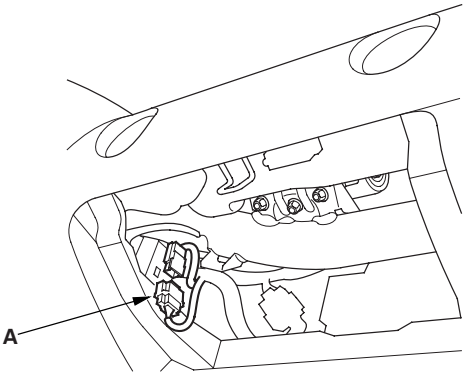

7. Disconnect both seat belt tensioner 2P connectors from the floor wire harness (A).

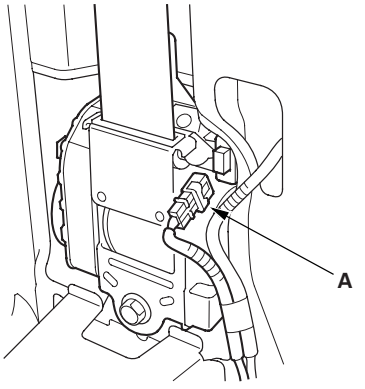

8. Disconnect the engine compartment wire harness 2P connector (A) from the left front impact sensor.

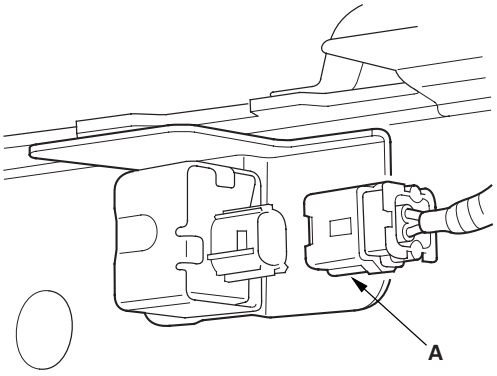

9. Disconnect SRS unit connector A (18P) from the SRS unit.

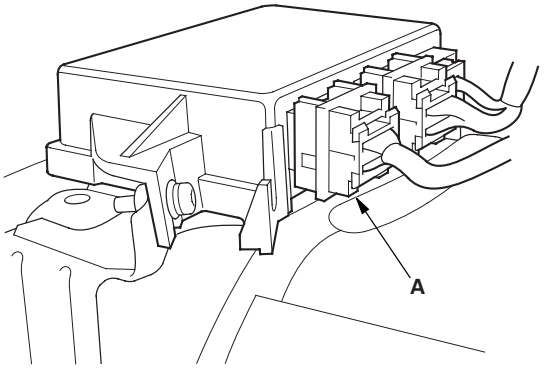

10. Check resistance between the No. 10 and No. 11 terminals of SRS unit connector A (18P). There should be an open circuit or at least 1 MΩ.

SRS UNIT CONNECTOR A (18P)

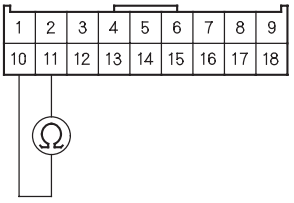

Wire side of female terminals

Is the resistance as specified?

YES—Go to step 11.

NO—Short in the engine compartment wire harness or dashboard wire harness; replace the faulty harness. ■

11. Reconnect the battery negative cable.

12. Turn the ignition switch ON (II).

13. Check for voltage between the No. 10 terminal of SRS unit connector A (18P) and body ground. There should be 1 V or less.

SRS UNIT CONNECTOR A (18P)

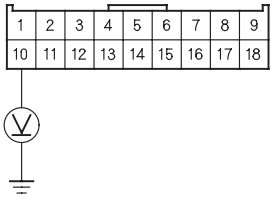

Wire side of female terminals

Is the voltage as specified?

YES—Go to step 14.

NO—Short to power in the engine compartment wire harness or the dashboard wire harness; replace the faulty harness. ■

(cont'd)

DTC Troubleshooting (cont'd)

14. Turn the ignition switch OFF.

15. Connect the SRS inflator simulator (jumper connector) and the simulator lead H to the engine compartment wire harness 2P connector (A).

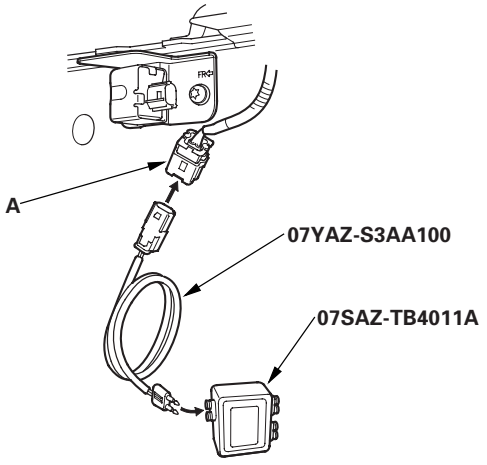

16. Check resistance between the No. 10 and No. 11 terminals of SRS unit connector A (18P). There should be 1 Ω or less.

SRS UNIT CONNECTOR A (18P)

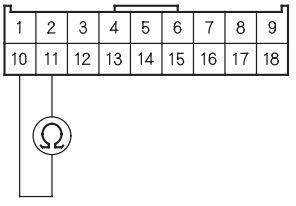

Wire side of female terminals

Is the resistance as specified?

YES—Faulty left front impact sensor or SRS unit. Replace the left front impact sensor (see page 23-144); if the problem is still present, replace the SRS unit (see page 23-141). ■

NO—Faulty engine compartment wire harness or dashboard wire harness; replace the faulty harness. ■

DTC 9-7: Faulty Right Front Impact Sensor

Special Tools Required
- SRS inflator simulator 07SAZ-TB4011A
- SRS simulator lead H 07YAZ-S3AA100

1. Erase the DTC memory (see page 23-23).

2. Turn the ignition switch ON (II), and check that the SRS indicator comes on for about 6 seconds and then goes off.

   Does the SRS indicator stay on?

   YES—Go to step 3.

   NO—Intermittent failure, system is OK at this time. Go to Troubleshooting Intermittent Failures (see page 23-24). If another DTC is indicated, go to the DTC Troubleshooting Index.

3. Turn the ignition switch OFF. Check the connections between SRS unit connector A (18P) and the SRS unit, and between the front impact sensor wire harness 2P connector and the right front impact sensor (see page 23-10) and at connector C405.

   Are the connections OK ?

   YES—Go to step 4.

   NO—Repair the poor connections and retest. If DTC 9-7 is still present, go to step 4.

4. Turn the ignition switch OFF. Disconnect the battery negative cable, and wait for 3 minutes.

5. Disconnect the driver's airbag 4P connector from the cable reel (A).

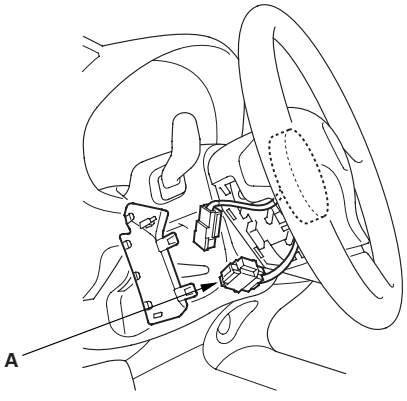

6. Disconnect the front passenger's airbag 4P connector from the dashboard wire harness (A).

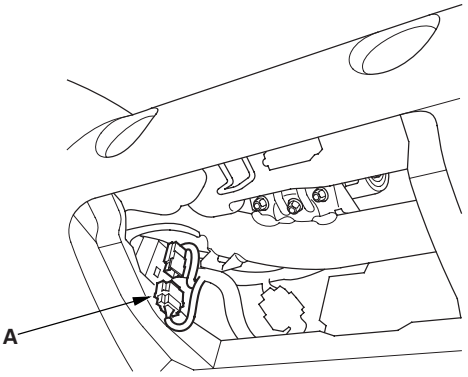

7. Disconnect both seat belt tensioner 2P connectors from the floor wire harness (A).

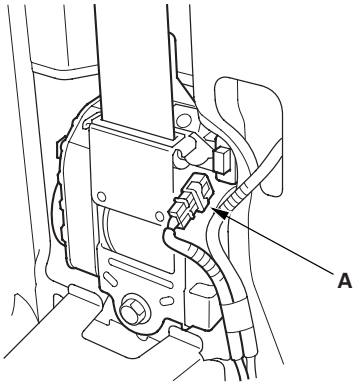

(cont'd)

DTC Troubleshooting (cont'd)

8. Disconnect the front impact sensor wire harness 2P connector (A) from the right front impact sensor.

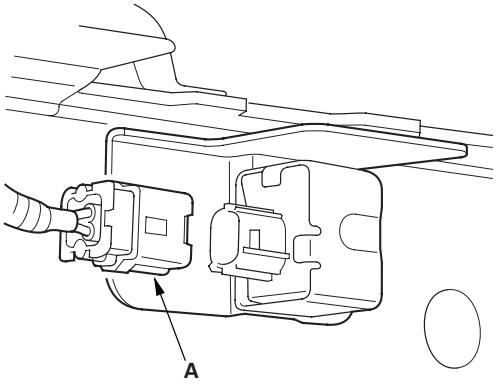

9. Disconnect SRS unit connector A (18P) from the SRS unit.

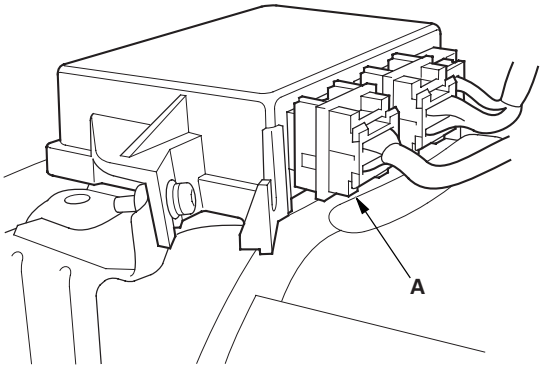

10. Check resistance between the No. 1 and No. 12 terminals of SRS unit connector A (18P). There should be an open circuit or at least 1 MΩ.

SRS UNIT CONNECTOR A (18P)

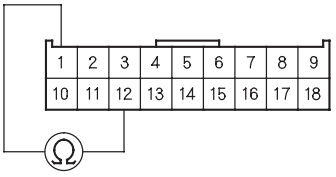

Wire side of female terminals

Is the resistance as specified?

YES—Go to step 11.

NO—Short in the front impact sensor wire harness or dashboard wire harness; replace the faulty harness.■

11. Reconnect the battery negative cable.

12. Turn the ignition switch ON (II).

13. Check for voltage between the No. 1 terminal of SRS unit connector A (18P) and body ground. There should be 1 V or less.

SRS UNIT CONNECTOR A (18P)

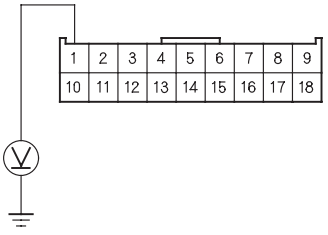

Wire side of female terminals

Is the voltage as specified?

YES—Go to step 14.

NO—Short to power in the front impact sensor wire harness or the dashboard wire harness; replace the faulty harness.■

14. Turn the ignition switch OFF.

15. Connect the SRS inflator simulator (jumper connector) and the simulator lead H to the front impact sensor wire harness 2P connector (A).

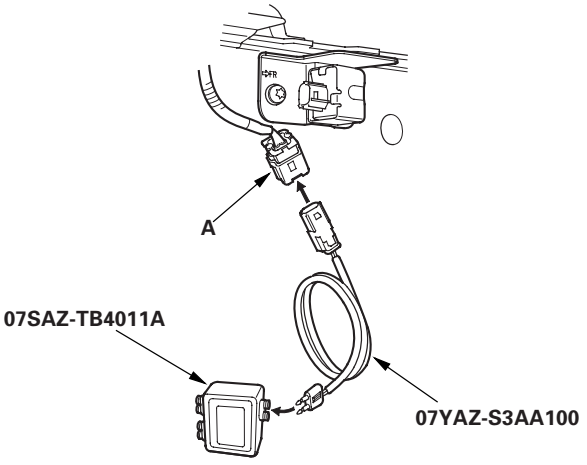

16. Check resistance between the No. 1 and No. 12 terminals of SRS unit connector A (18P). There should be 1 Ω or less.

SRS UNIT CONNECTOR A (18P)

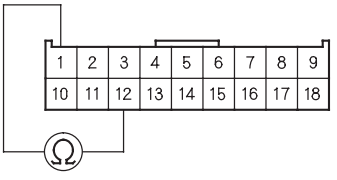

Wire side of female terminals

Is the resistance as specified?

YES—Faulty right front impact sensor or SRS unit. Replace the right front impact sensor (see page 23-144); if the problem is still present, replace the SRS unit (see page 23-141). ■

NO—Faulty front impact sensor wire harness or dashboard wire harness; replace the faulty harness. ■

DTC Troubleshooting (cont'd)

DTC 11-1: Open or Increased Resistance in Driver's Side Airbag Inflator

Special Tools Required
- SRS inflator simulator 07SAZ-TB4011A
- SRS simulator lead E 07XAZ-S1A0200

1. Erase the DTC memory (see page 23-23).

2. Turn the ignition switch ON (II), and check that the SRS indicator comes on for about 6 seconds and then goes off.

   Does the SRS indicator stay on?

   YES—Go to step 3.

   NO—Intermittent failure, system is OK at this time. Go to Troubleshooting Intermittent Failures (see page 23-24). If another DTC is indicated, go to the DTC Troubleshooting Index.

3. Turn the ignition switch OFF. Disconnect the battery negative cable, and wait for 3 minutes.

4. Disconnect the floor wire harness 2P connector (A) from the driver's side airbag (B).

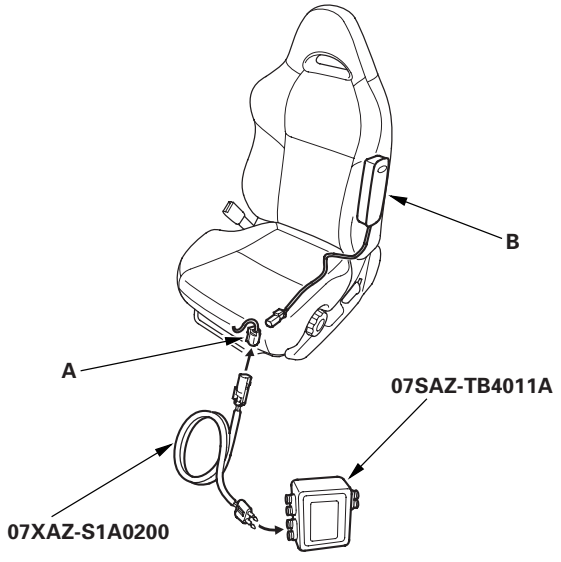

5. Connect the SRS inflator simulator (2 Ω connector) and the simulator lead E to the floor wire harness 2P connector.

6. Reconnect the battery negative cable.

7. Erase the DTC memory.

8. Read the DTC.

   Is DTC 11-1 indicated?

   YES—Go to step 9.

   NO—Open or increased resistance in the driver's side airbag inflator; replace the driver's side airbag (see page 23-134). ■

9. Turn the ignition switch OFF. Disconnect the battery negative cable, and wait for 3 minutes.

10. Disconnect the front passenger's side airbag 2P connector (A) and both seat belt buckle tensioner 4P connectors (B).

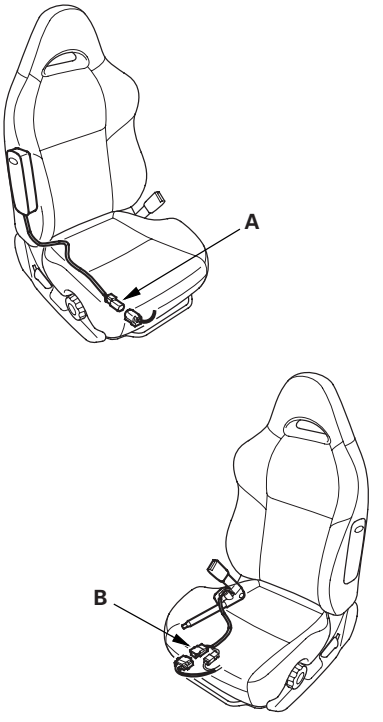

11. Disconnect SRS unit connector B (18P) from the SRS unit. Do not disconnect the simulator lead from the floor wire harness 2P connector.

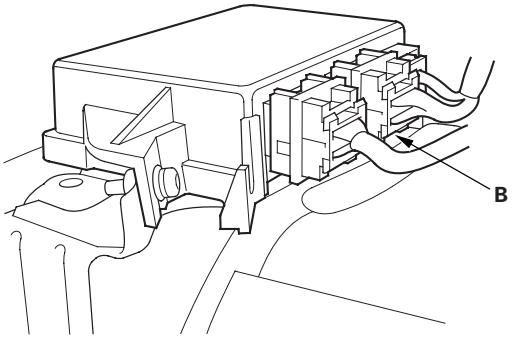

12. Check resistance between the No. 6 and No. 17 terminals of SRS unit connector B (18P). There should be 2.0—3.0 Ω.

SRS UNIT CONNECTOR B (18P)

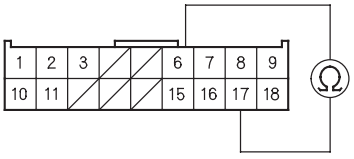

Wire side of female terminals

Is the resistance as specified?

YES—Faulty SRS unit or poor connection at SRS unit connector B (18P) and the SRS unit. Check the connection; if the connection is OK, replace the SRS unit (see page 23-141).■

NO—Open or increased resistance in the floor wire harness; replace the floor wire harness.■

DTC 11-3: Short to Another Wire or Decreased Resistance in Driver's Side Airbag Inflator

Special Tools Required
- SRS inflator simulator 07SAZ-TB4011A
- SRS simulator lead E 07XAZ-S1A0200

1. Erase the DTC memory (see page 23-23).

2. Turn the ignition switch ON (II), and check that the SRS indicator comes on for about 6 seconds and then goes off.

   Does the SRS indicator stay on?

   YES—Go to step 3.

   NO—Intermittent failure, system is OK at this time. Go to Troubleshooting Intermittent Failures (see page 23-24). If another DTC is indicated, go to the DTC Troubleshooting Index.

3. Turn the ignition switch OFF. Disconnect the battery negative cable, and wait for 3 minutes.

4. Disconnect the floor wire harness 2P connector (A) from the driver's side airbag (B).

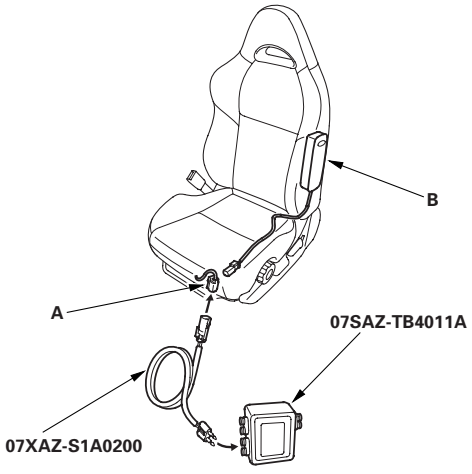

5. Connect the SRS inflator simulator (2 Ω connector) and the simulator lead E to the floor wire harness 2P connector.

6. Reconnect the battery negative cable.

7. Erase the DTC memory.

(cont'd)

DTC Troubleshooting (cont'd)

8. Read the DTC.

   Is DTC 11-3 indicated?

   YES—Go to step 9.

   NO—Short to another wire in the driver's side airbag inflator; replace the driver's side airbag (see page 23-134). ■

9. Turn the ignition switch OFF. Disconnect the battery negative cable, and wait for 3 minutes.

10. Disconnect the front passenger's side airbag 2P connector (A) and both seat belt buckle tensioner 4P connectors (B).

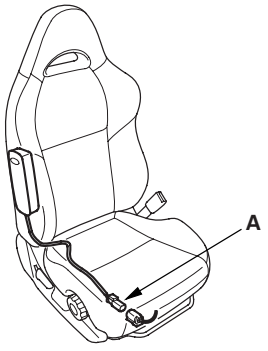

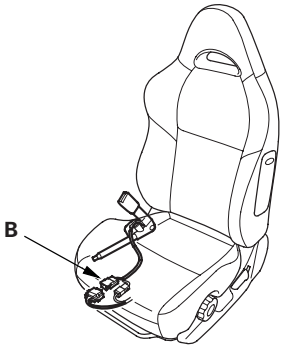

11. Disconnect the simulator lead from the floor wire harness 2P connector.

12. Disconnect SRS unit connector B (18P) from the SRS unit.

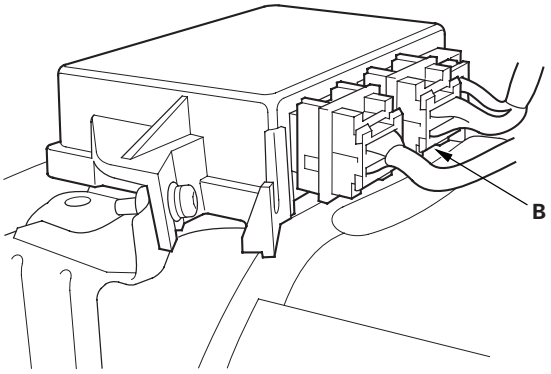

13. Check resistance between the No. 6 and No. 17 terminals of SRS unit connector B (18P). There should be an open circuit or at least 1 MΩ.

SRS UNIT CONNECTOR B (18P)

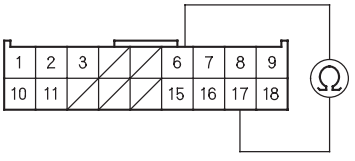

Wire side of female terminals

Is the resistance as specified?

YES—Faulty SRS unit; replace the SRS unit (see page 23-141). ■

NO—Short to another wire in the floor wire harness; replace the floor wire harness. ■

DTC 11-4: Short to Power in Driver's Side Airbag Inflator

Special Tools Required
- SRS inflator simulator 07SAZ-TB4011A
- SRS simulator lead E 07XAZ-S1A0200

1. Erase the DTC memory (see page 23-23).

2. Turn the ignition switch ON (II), and check that the SRS indicator comes on for about 6 seconds and then goes off.

   Does the SRS indicator stay on?

   YES—Go to step 3.

   NO—Intermittent failure, system is OK at this time. Go to Troubleshooting Intermittent Failures (see page 23-24). If another DTC is indicated, go to the DTC Troubleshooting Index.

3. Turn the ignition switch OFF. Disconnect the battery negative cable, and wait for 3 minutes.

4. Disconnect the floor wire harness 2P connector (A) from the driver's side airbag (B).

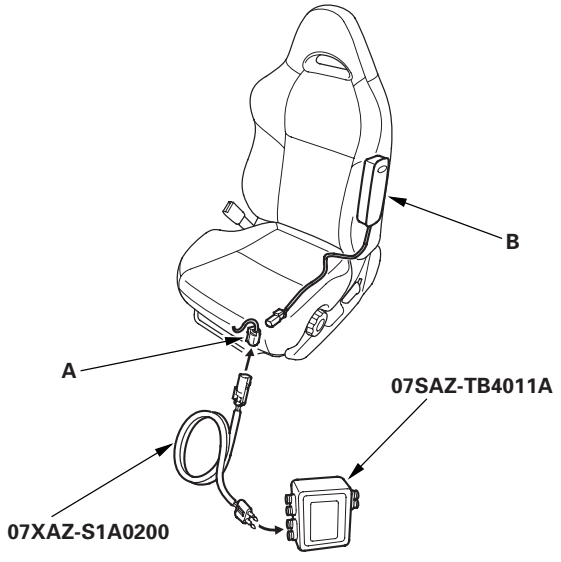

5. Connect the SRS inflator simulator (2 Ω connector) and the simulator lead E to the floor wire harness 2P connector.

6. Reconnect the battery negative cable.

7. Erase the DTC memory.

8. Read the DTC.

   Is DTC 11-4 indicated?

   YES—Go to step 9.

   NO—Short to power in the driver's side airbag inflator; replace the driver's side airbag (see page 23-134). ■

9. Turn the ignition switch OFF. Disconnect the battery negative cable, and wait for 3 minutes.

10. Disconnect the front passenger's side airbag 2P connector (A) and both seat belt buckle tensioner 4P connectors (B).

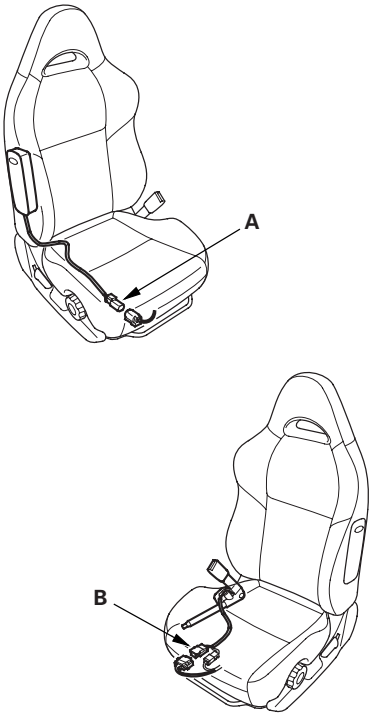

(cont'd)

DTC Troubleshooting (cont'd)

11. Disconnect SRS unit connector B (18P) from the SRS unit.

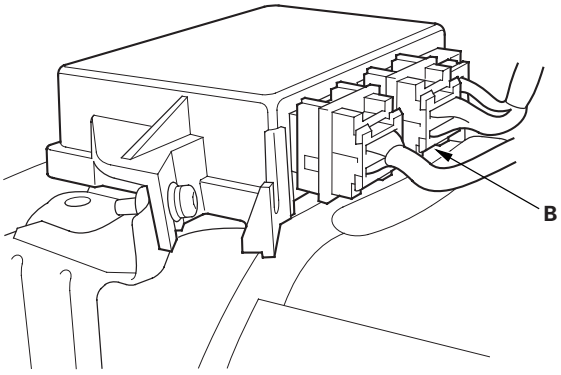

12. Turn the ignition switch ON (II).

13. Check for voltage between the No. 6 terminal of SRS unit connector B (18P) and body ground, and between the No. 17 terminal and body ground. There should be 0.5 V or less.

SRS UNIT CONNECTOR B (18P)

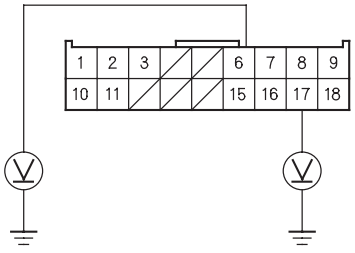

Wire side of female terminals

Is the voltage as specified?

YES—Faulty SRS unit; replace the SRS unit (see page 23-141).■

NO—Short to power in the floor wire harness; replace the floor wire harness.■

DTC 11-5: Short to Ground in Driver's Side Airbag Inflator

Special Tools Required
- SRS inflator simulator 07SAZ-TB4011A
- SRS simulator lead E 07XAZ-S1A0200

1. Erase the DTC memory (see page 23-23).

2. Turn the ignition switch ON (II), and check that the SRS indicator comes on for about 6 seconds and then goes off.

   Does the SRS indicator stay on?

   YES—Go to step 3.

   NO—Intermittent failure, system is OK at this time. Go to Troubleshooting Intermittent Failures (see page 23-24). If another DTC is indicated, go to the DTC Troubleshooting Index.

3. Turn the ignition switch OFF. Disconnect the battery negative cable, and wait for 3 minutes.

4. Disconnect the floor wire harness 2P connector (A) from the driver's side airbag (B).

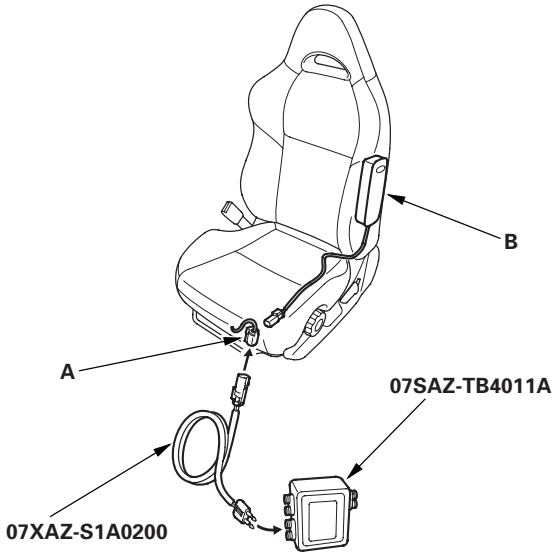

5. Connect the SRS inflator simulator (2 Ω connector) and the simulator lead E to the floor wire harness 2P connector.

6. Reconnect the battery negative cable.

7. Erase the DTC memory.

8. Read the DTC.

   Is DTC 11-5 indicated?

   YES—Go to step 9.

   NO—Short to ground in the driver's side airbag inflator; replace the driver's side airbag (see page 23-134). ■

9. Turn the ignition switch OFF. Disconnect the battery negative cable, and wait for 3 minutes.

10. Disconnect the front passenger's side airbag 2P connector (A) and both seat belt buckle tensioner 4P connectors (B).

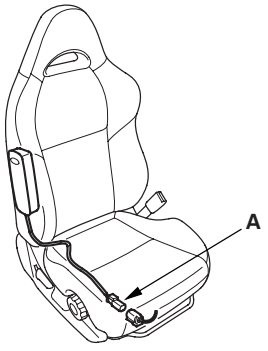

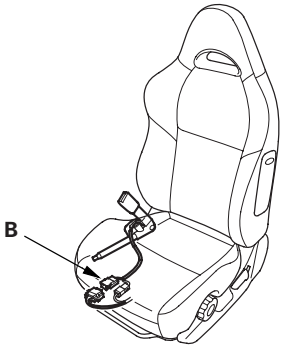

11. Disconnect SRS unit connector B (18P) from the SRS unit.

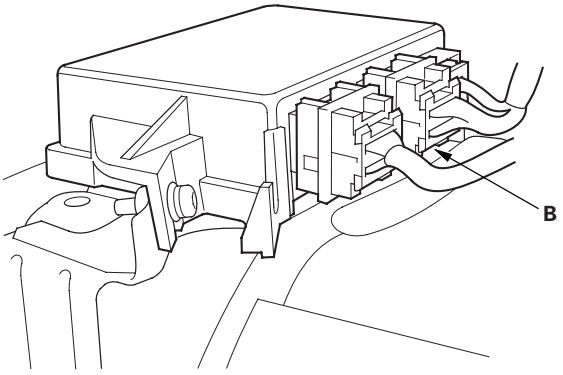

12. Check resistance between the No. 17 terminal of the SRS unit connector B (18P) and body ground, and between the No. 6 terminal and body ground. There should be an open circuit or at least 1 MΩ.

SRS UNIT CONNECTOR B (18P)

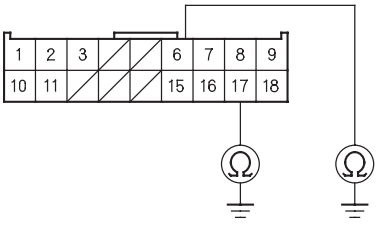

Wire side of female terminals

Is the resistance as specified?

YES—Faulty SRS unit; replace the SRS unit (see page 23-141). ■

NO—Short to ground in the floor wire harness; replace the floor wire harness. ■

DTC Troubleshooting (cont'd)

DTC 12-1: Open or Increased Resistance in Front Passenger's Side Airbag Inflator

Special Tools Required
- SRS inflator simulator 07SAZ-TB4011A
- SRS simulator lead E 07XAZ-S1A0200

1. Erase the DTC memory (see page 23-23).

2. Turn the ignition switch ON (II), and check that the SRS indicator comes on for about 6 seconds and then goes off.

   Does the SRS indicator stay on?

   YES—Go to step 3.

   NO—Intermittent failure, system is OK at this time. Go to Troubleshooting Intermittent Failures (see page 23-24). If another DTC is indicated, go to the DTC Troubleshooting Index.

3. Turn the ignition switch OFF. Disconnect the battery negative cable, and wait for 3 minutes.

4. Disconnect the floor wire harness 2P connector (A) from the front passenger's side airbag (B).

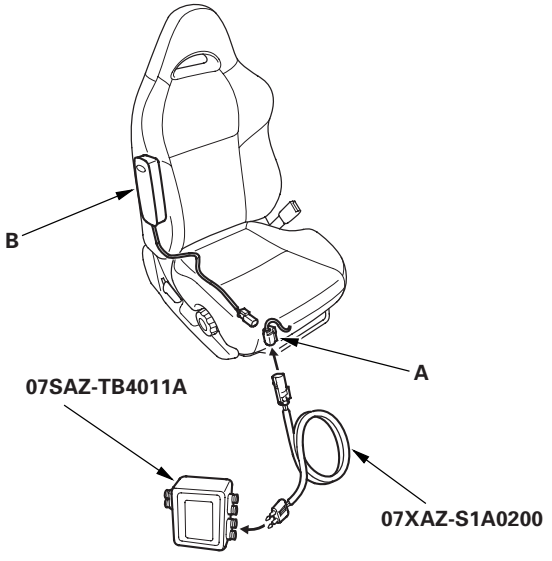

5. Connect the SRS inflator simulator (2 Ω connector) and the simulator lead E to the floor wire harness 2P connector.

6. Reconnect the battery negative cable.

7. Erase the DTC memory.

8. Read the DTC.

   Is DTC 12-1 indicated?

   YES—Go to step 9.

   NO—Open or increased resistance in the front passenger's side airbag inflator; replace the front passenger's side airbag (see page 23-134). ■

9. Turn the ignition switch OFF. Disconnect the battery negative cable, and wait for 3 minutes.

10. Disconnect the driver's side airbag 2P connector (A) and both seat belt buckle tensioner 4P connectors (B).

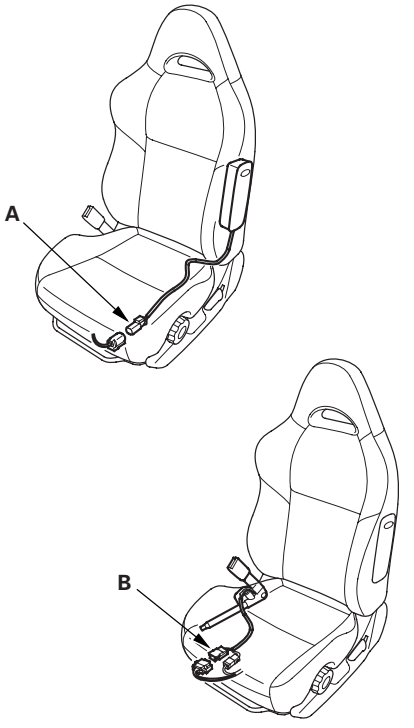

11. Disconnect SRS unit connector B (18P) from the SRS unit. Do not disconnect the simulator lead from the floor wire harness 2P connector.

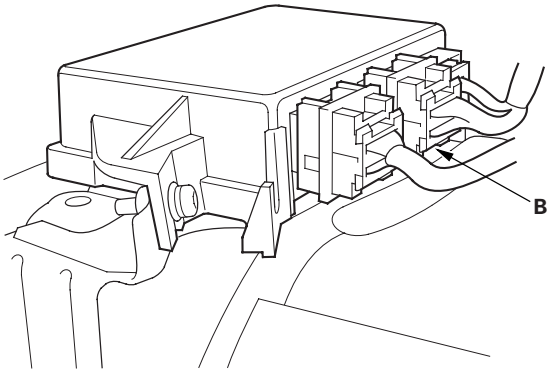

12. Check resistance between the No. 7 and No. 18 terminals of SRS unit connector B (18P). There should be 2.0—3.0 Ω.

SRS UNIT CONNECTOR B (18P)

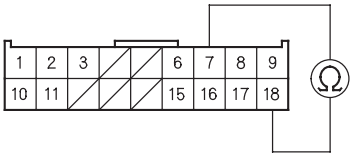

Wire side of female terminals

Is the resistance as specified?

YES—Faulty SRS unit or poor connection at SRS unit connector B (18P) and the SRS unit. Check the connection; if the connection is OK, replace the SRS unit (see page 23-141).■

NO—Open or increased resistance in the floor wire harness; replace the floor wire harness.■

DTC 12-3: Short to Another Wire or Decreased Resistance in Front Passenger's Side Airbag Inflator

Special Tools Required
- SRS inflator simulator 07SAZ-TB4011A
- SRS simulator lead E 07XAZ-S1A0200

1. Erase the DTC memory (see page 23-23).

2. Turn the ignition switch ON (II), and check that the SRS indicator comes on for about 6 seconds and then goes off.

   Does the SRS indicator stay on?

   YES—Go to step 3.

   NO—Intermittent failure, system is OK at this time. Go to Troubleshooting Intermittent Failures (see page 23-24). If another DTC is indicated, go to the DTC Troubleshooting Index.

3. Turn the ignition switch OFF. Disconnect the battery negative cable, and wait for 3 minutes.

4. Disconnect the floor wire harness 2P connector (A) from the front passenger's side airbag (B).

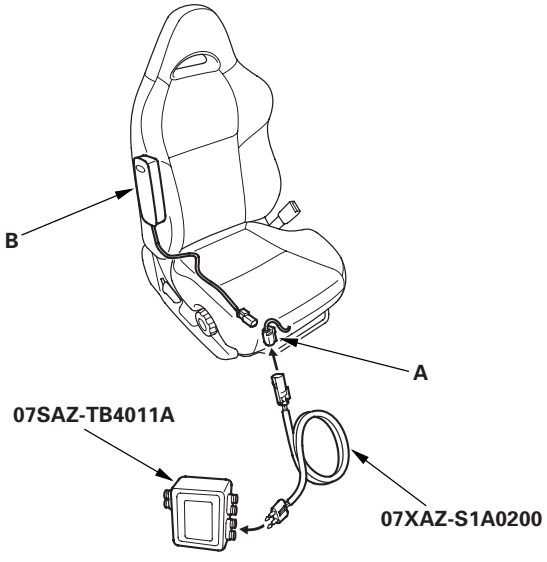

5. Connect the SRS inflator simulator (2 Ω connector) and the simulator lead E to the floor wire harness 2P connector.

(cont'd)

DTC Troubleshooting (cont'd)

6. Reconnect the battery negative cable.

7. Erase the DTC memory.

8. Read the DTC.

   Is DTC 12-3 indicated?

   YES—Go to step 9

   NO—Short to another wire in the front passenger's side airbag inflator; replace the front passenger's side airbag (see page 23-134). ■

9. Turn the ignition switch OFF. Disconnect the battery negative cable, and wait for 3 minutes.

10. Disconnect the driver's side airbag 2P connector (A) and both seat belt buckle tensioner 4P connectors (B).

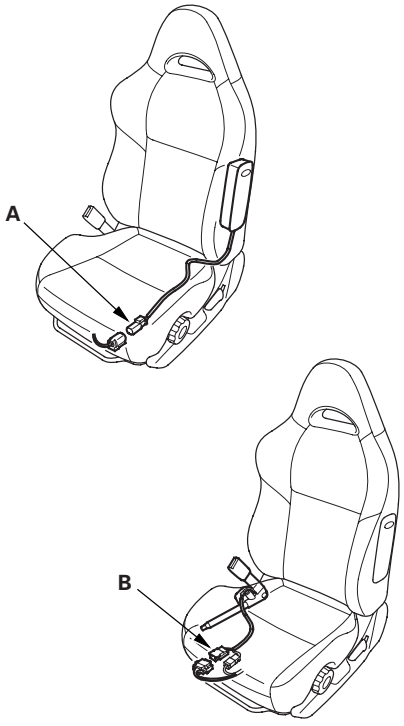

11. Disconnect the simulator lead from the floor wire harness 2P connector.

12. Disconnect SRS unit connector B (18P) from the SRS unit.

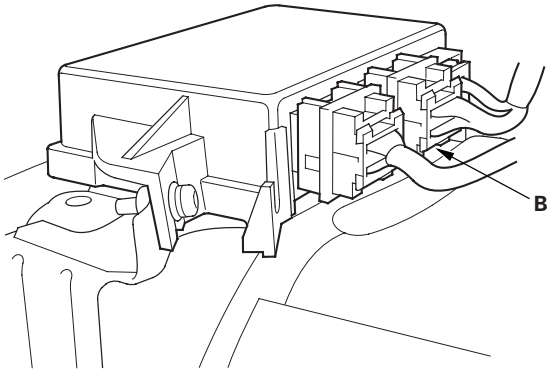

13. Check resistance between the No. 7 and No. 18 terminals of SRS unit connector B (18P). There should be an open circuit or at least 1 MΩ.

SRS UNIT CONNECTOR B (18P)

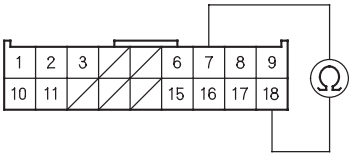

Wire side of female terminals

Is the resistance as specified?

YES—Faulty SRS unit; replace the SRS unit (see page 23-141). ■

NO—Short to another wire in the floor wire harness; replace the floor wire harness. ■

DTC 12-4: Short to Power in Front Passenger's Side Airbag Inflator

Special Tools Required
- SRS inflator simulator 07SAZ-TB4011A
- SRS simulator lead E 07XAZ-S1A0200

1. Erase the DTC memory (see page 23-23).

2. Turn the ignition switch ON (II), and check that the SRS indicator comes on for about 6 seconds and then goes off.

   Does the SRS indicator stay on?

   YES—Go to step 3.

   NO—Intermittent failure, system is OK at this time. Go to Troubleshooting Intermittent Failures (see page 23-24). If another DTC is indicated, go to the DTC Troubleshooting Index.

3. Turn the ignition switch OFF. Disconnect the battery negative cable, and wait for 3 minutes.

4. Disconnect the floor wire harness 2P connector (A) from the front passenger's side airbag (B).

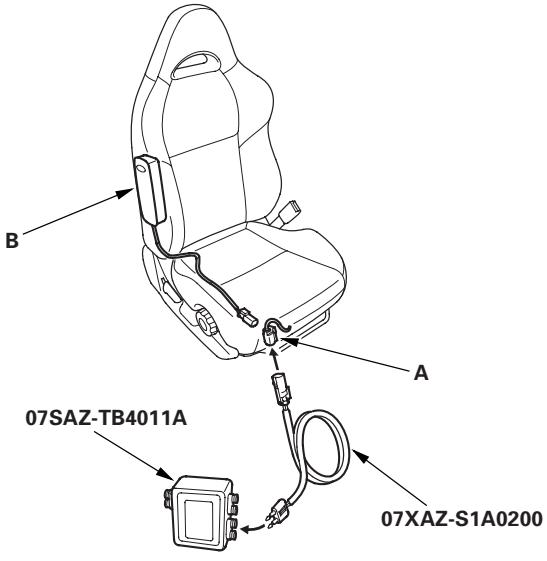

5. Connect the SRS inflator simulator (2 Ω connector) and the simulator lead E to the floor wire harness 2P connector.

6. Reconnect the battery negative cable.

7. Erase the DTC memory.

8. Read the DTC.

   Is DTC 12-4 indicated?

   YES—Go to step 9.

   NO—Short to power in the front passenger's side airbag inflator; replace the front passenger's side airbag (see page 23-134). ■

9. Turn the ignition switch OFF. Disconnect the battery negative cable, and wait for 3 minutes.

10. Disconnect the driver's side airbag 2P connector (A) and both seat belt buckle tensioner 4P connectors (B).

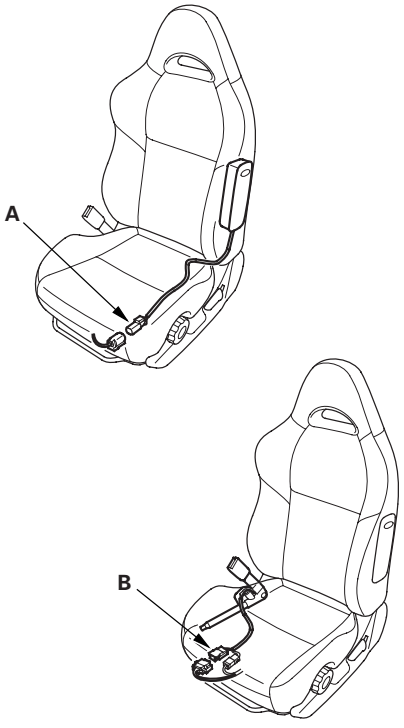

(cont'd)

DTC Troubleshooting (cont'd)

11. Disconnect SRS unit connector B (18P) from the SRS unit.

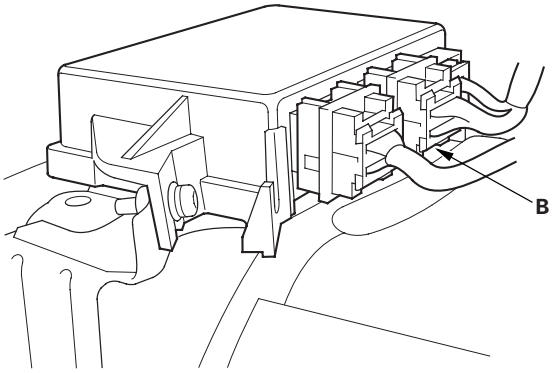

12. Turn the ignition switch ON (II).

13. Check for voltage between the No. 7 terminal of SRS unit connector B (18P) and body ground, and between the No. 18 terminal and body ground. There should be 0.5 V or less.

SRS UNIT CONNECTOR B (18P)

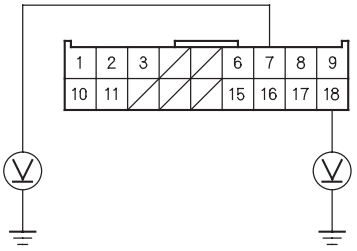

Wire side of female terminals

Is the voltage as specified?

YES—Faulty SRS unit; replace the SRS unit (see page 23-141).■

NO—Short to power in the floor wire harness; replace the floor wire harness.■

DTC 12-5: Short to Ground in Front Passenger's Side Airbag Inflator

Special Tools Required
- SRS inflator simulator 07SAZ-TB4011A
- SRS simulator lead E 07XAZ-S1A0200

1. Erase the DTC memory (see page 23-23).

2. Turn the ignition switch ON (II), and check that the SRS indicator comes on for about 6 seconds and then goes off.

   Does the SRS indicator stay on?

   YES—Go to step 3.

   NO—Intermittent failure, system is OK at this time. Go to Troubleshooting Intermittent Failures (see page 23-24). If another DTC is indicated, go to the DTC Troubleshooting Index.

3. Turn the ignition switch OFF. Disconnect the battery negative cable, and wait for 3 minutes.

4. Disconnect the floor wire harness 2P connector (A) from the front passenger's side airbag (B).

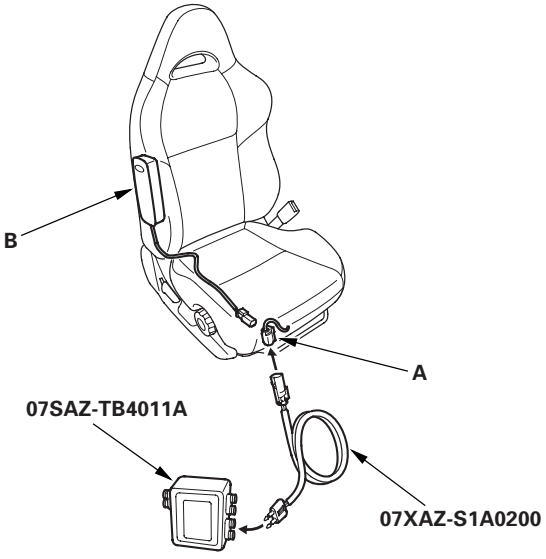

5. Connect the SRS inflator simulator (2 Ω connector) and the simulator lead E to the floor wire harness 2P connector.

6. Reconnect the battery negative cable.

7. Erase the DTC memory.

8. Read the DTC.

   Is DTC 12-5 indicated?

   YES—Go to step 9.

   NO—Short to ground in the front passenger's side airbag inflator; replace the front passenger's side airbag (see page 23-134). ■

9. Turn the ignition switch OFF. Disconnect the battery negative cable, and wait for 3 minutes.

10. Disconnect the driver's side airbag 2P connector (A) and both seat belt buckle tensioner 4P connectors (B).

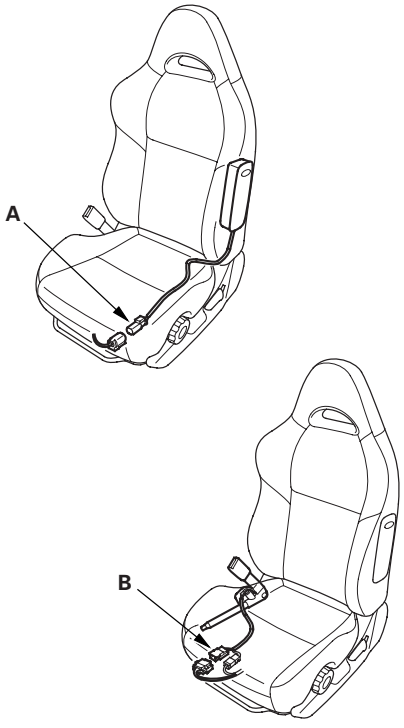

11. Disconnect SRS unit connector B (18P) from the SRS unit.

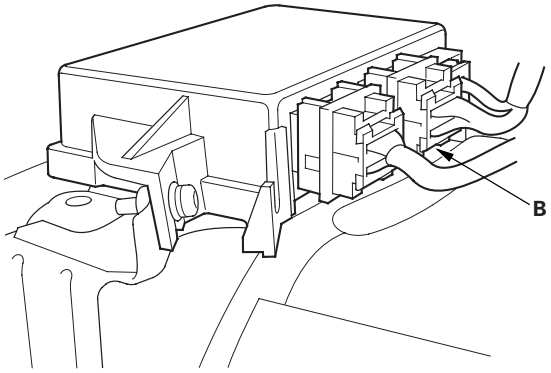

12. Check resistance between the No. 18 terminal of the SRS unit connector B (18P) and body ground, and between the No. 7 terminal and body ground. There should be an open circuit or at least 1 MΩ.

SRS UNIT CONNECTOR B (18P)

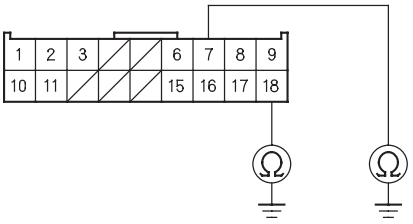

Wire side of female terminals

Is the resistance as specified?

YES—Faulty SRS unit; replace the SRS unit (see page 23-141). ■

NO—Short to ground in the floor wire harness; replace the floor wire harness. ■

DTC Troubleshooting (cont'd)

DTC 13-3: No Signal from the Driver's Side Impact Sensor

Special Tools Required
- SRS inflator simulator 07SAZ-TB4011A
- SRS simulator lead H 07YAZ-S3AA100

1. Erase the DTC memory (see page 23-23).

2. Turn the ignition switch ON (II), and check that the SRS indicator comes on for about 6 seconds and then goes off.

   Does the SRS indicator stay on?

   YES—Go to step 3.

   NO—Intermittent failure, system is OK at this time. Go to Troubleshooting Intermittent Failures (see page 23-24). If another DTC is indicated, go to the DTC Troubleshooting Index.

3. Turn the ignition switch OFF. Disconnect the battery negative cable, and wait for 3 minutes.

4. Check the connection between the floor wire harness 2P connector and the driver's side impact sensor.

   Is the connection OK?

   YES—Go to step 5.

   NO—Replace the driver's side impact sensor and/or the floor harness, as needed (see page 23-142). ■

5. Disconnect the driver's side airbag and front passenger's side airbag 2P connectors (A), and disconnect both seat belt buckle tensioner 4P connectors (B).

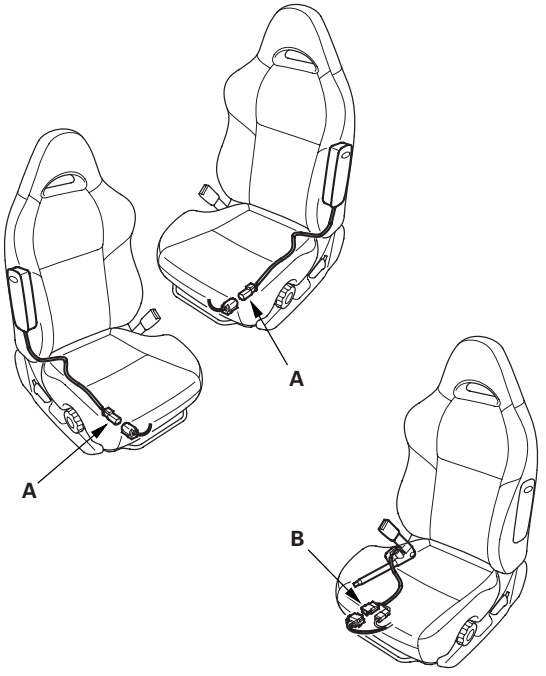

6. Disconnect the floor wire harness 2P connector (A) from the driver's side impact sensor (B).

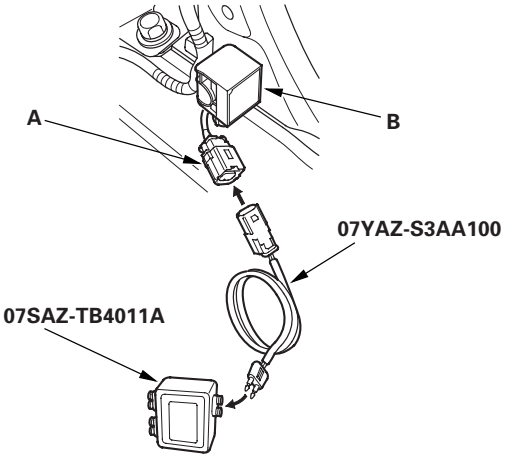

7. Connect the SRS inflator simulator (jumper connector) and the simulator lead H to the floor wire harness 2P connector.

8. Disconnect SRS unit connector B (18P) from the SRS unit.

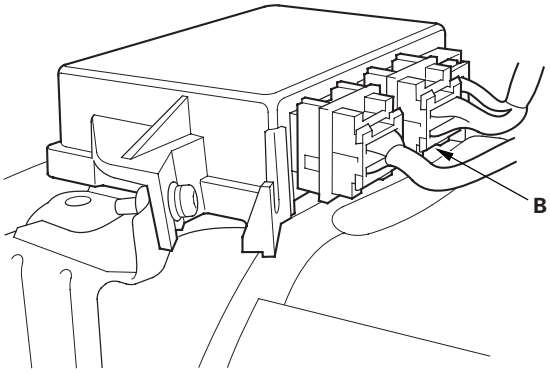

9. Check resistance between the No. 8 and No. 15 terminals of SRS unit connector B (18P). There should be 0—1.0 Ω.

SRS UNIT CONNECTOR B (18P)

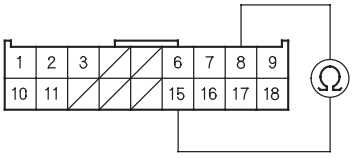

Wire side of female terminals

Is the resistance as specified?

YES—Faulty driver's side impact sensor or SRS unit; replace the driver's side impact sensor (see page 23-142). If the problem is still present, replace the SRS unit (see page 23-141). ■

NO—Open in floor wire harness; replace the floor wire harness. ■

DTC 13-4: Faulty Power Supply to the Driver's Side Impact Sensor

1. Erase the DTC memory (see page 23-23).

2. Turn the ignition switch ON (II), and check that the SRS indicator comes on for about 6 seconds and then goes off.

   Does the SRS indicator stay on?

   YES—Go to step 3.

   NO—Intermittent failure, system is OK at this time. Go to Troubleshooting Intermittent Failures (see page 23-24). If another DTC is indicated, go to the DTC Troubleshooting Index.

3. Turn the ignition switch OFF. Disconnect the battery negative cable, and wait for 3 minutes.

4. Disconnect the driver's side airbag and front passenger's side airbag 2P connectors (A), and disconnect both seat belt buckle tensioner 4P connectors (B).

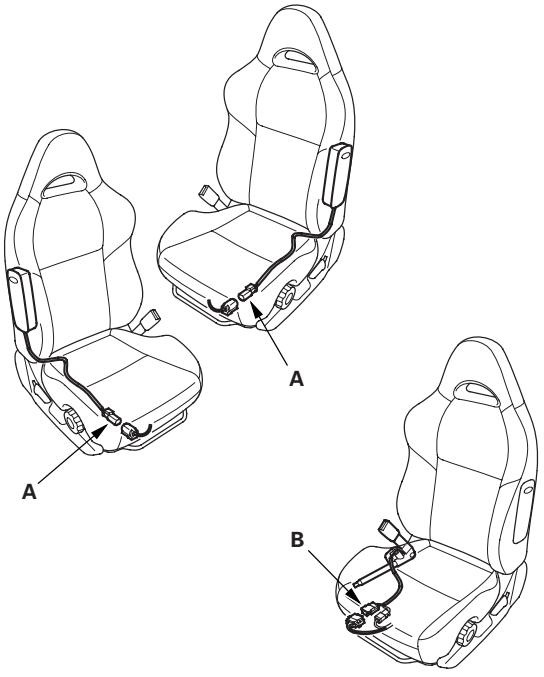

(cont'd)

DTC Troubleshooting (cont'd)

5. Disconnect the floor wire harness 2P connector (A) from the driver's side impact sensor (B).

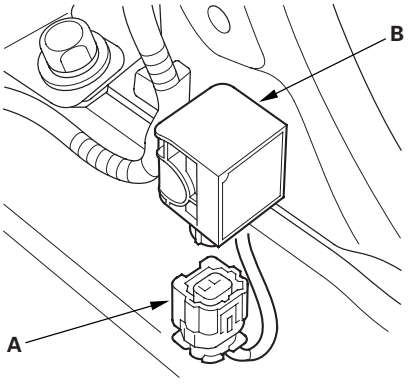

6. Disconnect SRS unit connector B (18P) from the SRS unit.

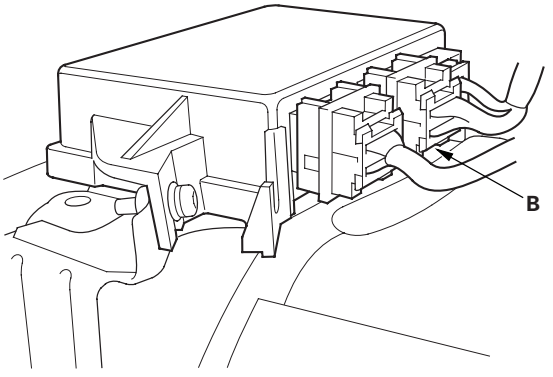

7. Check resistance between the No. 8 terminal of SRS unit connector B (18P) and body ground. There should be an open circuit or at least 1 MΩ.

SRS UNIT CONNECTOR B (18P)

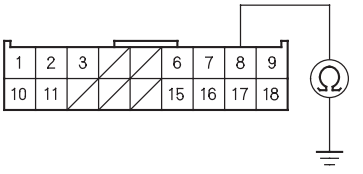

Wire side of female terminals

Is the resistance as specified?

YES—Go to step 8.

NO—Short to ground in the floor wire harness; replace the floor wire harness. ■

8. Check resistance between the No. 8 and No. 15 terminals of SRS unit connector B (18P). There should be an open circuit or at least 1 MΩ.

SRS UNIT CONNECTOR B (18P)

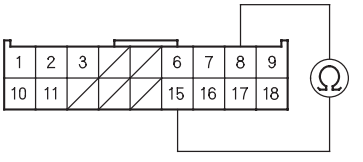

Wire side of female terminals

Is the resistance as specified?

YES—Faulty driver's side impact sensor or SRS unit; replace the driver's side impact sensor (see page 23-142). If the problem is still present, replace the SRS unit (see page 23-141). ■

NO—Short in the floor wire harness; replace the floor wire harness. ■

DTC 14-3: No Signal from the Front Passenger's Side Impact Sensor

Special Tools Required
- SRS inflator simulator 07SAZ-TB4011A
- SRS simulator lead H 07YAZ-S3AA100

1. Erase the DTC memory (see page 23-23).

2. Turn the ignition switch ON (II), and check that the SRS indicator comes on for about 6 seconds and then goes off.

   Does the SRS indicator stay on?

   YES—Go to step 3.

   NO—Intermittent failure, system is OK at this time. Go to Troubleshooting Intermittent Failures (see page 23-24). If another DTC is indicated, go to the DTC Troubleshooting Index.

3. Turn the ignition switch OFF. Disconnect the battery negative cable, and wait for 3 minutes.

4. Check the connection between the floor wire harness 2P connector and the front passenger's side impact sensor.

   Is the connection OK ?

   YES—Go to step 5.

   NO—Poor connection between the floor wire harness 2P connector and the front passenger's side impact sensor; replace the front passenger's side impact sensor and/or the floor harness, as needed (see page 23-142). ■

5. Disconnect the driver's side airbag and front passenger's side airbag 2P connectors (A), and disconnect both seat belt buckle tensioner 4P connectors (B).

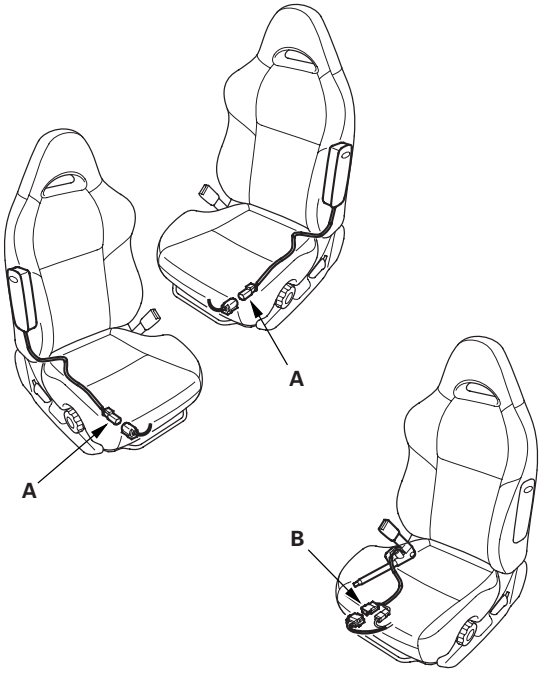

6. Disconnect the floor wire harness 2P connector (A) from the front passenger's side impact sensor (B).

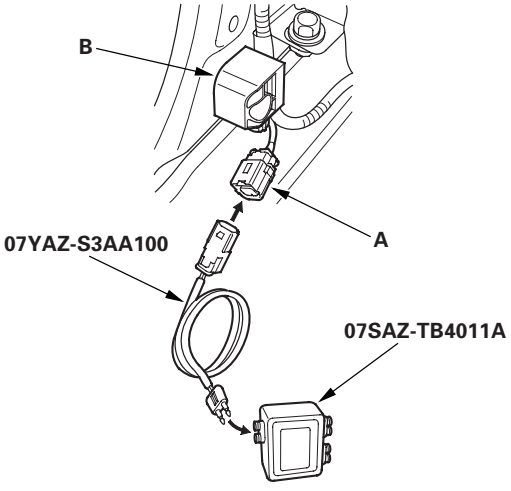

7. Connect the SRS inflator simulator (jumper connector) and the simulator lead H to the floor wire harness 2P connector.

(cont'd)

DTC Troubleshooting (cont'd)

8. Disconnect SRS unit connector B (18P) from the SRS unit.

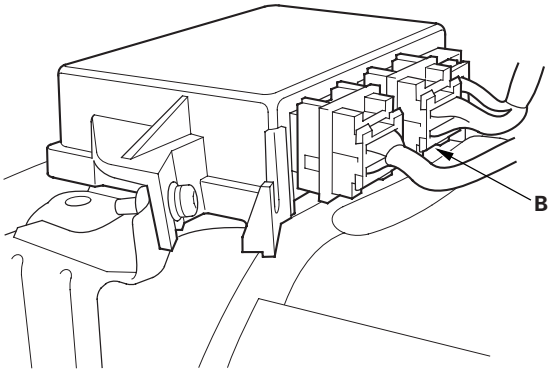

9. Check resistance between the No. 9 and No. 16 terminals of SRS unit connector B (18P). There should be 0—1.0 Ω.

SRS UNIT CONNECTOR B (18P)

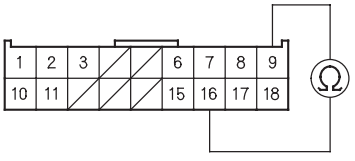

Wire side of female terminals

Is the resistance as specified?

YES—Faulty front passenger's side impact sensor or SRS unit; replace the front passenger's side impact sensor (see page 23-142). If the problem is still present, replace the SRS unit (see page 23-141). ■

NO—Open in floor wire harness; replace the floor wire harness. ■

DTC 14-4: Faulty Power Supply to the Front Passenger's Side Impact Sensor

1. Erase the DTC memory (see page 23-23).

2. Turn the ignition switch ON (II), and check that the SRS indicator comes on for about 6 seconds and then goes off.

   Does the SRS indicator stay on?

   YES—Go to step 3.

   NO—Intermittent failure, system is OK at this time. Go to Troubleshooting Intermittent Failures (see page 23-24). If another DTC is indicated, go to the DTC Troubleshooting Index.

3. Turn the ignition switch OFF. Disconnect the battery negative cable, and wait for 3 minutes.

4. Disconnect the driver's side airbag and front passenger's side airbag 2P connectors (A), and disconnect both seat belt buckle tensioner 4P connectors (B).

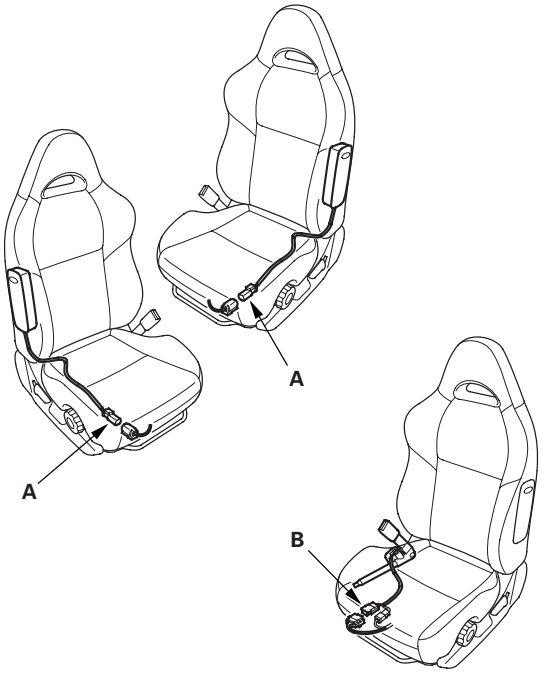

5. Disconnect the floor wire harness 2P connector (A) from the front passenger's side impact sensor (B).

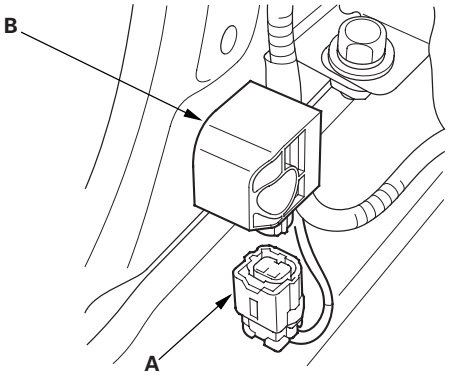

6. Disconnect SRS unit connector B (18P) from the SRS unit.

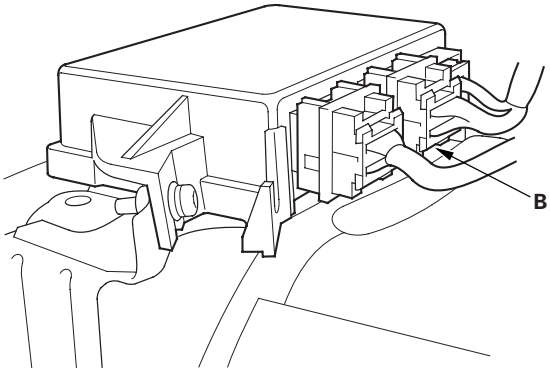

7. Check resistance between the No. 9 terminal of SRS unit connector B (18P) and body ground. There should be an open circuit or at least 1 MΩ.

SRS UNIT CONNECTOR B (18P)

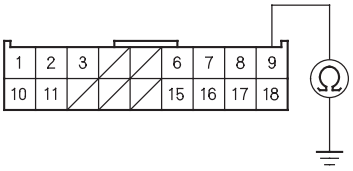

Wire side of female terminals

Is the resistance as specified?

YES—Go to step 8.

NO—Short to ground in the floor wire harness; replace the floor wire harness. ■

8. Check resistance between the No. 9 and No. 16 terminals of SRS unit connector B (18P). There should be an open circuit or at least 1 MΩ.

SRS UNIT CONNECTOR B (18P)

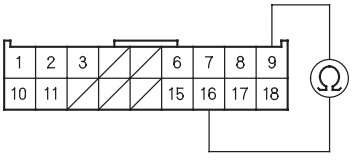

Wire side of female terminals

Is the resistance as specified?

YES—Faulty front passenger's side impact sensor or SRS unit; replace the front passenger's side impact sensor (see page 23-142). If the problem is still present, replace the SRS unit (see page 23-141). ■

NO—Short in the floor wire harness; replace the floor wire harness. ■

DTC Troubleshooting (cont'd)

DTC 15-1: Faulty OPDS Unit or OPDS System Not Initialized

1. Make sure nothing is on the front passenger's seat.
2. Initialize the OPDS unit (see page 23-24).
3. Erase the DTC memory (see page 23-23).
4. Read the DTC.

   Is DTC 15-1 indicated?

   YES—Go to step 5.

   NO—Intermittent failure, system is OK at this time. Go to Troubleshooting Intermittent Failures (see page 23-24). If another DTC is indicated, go to the DTC Troubleshooting Index.

5. Check the No. 9 (10 A) fuse in the under-dash fuse/relay box.

   Is the fuse OK?

   YES—Go to step 6.

   NO—Go to step 9.

6. Disconnect the OPDS unit 8P connector D from the OPDS unit (A) (see page 23-143).

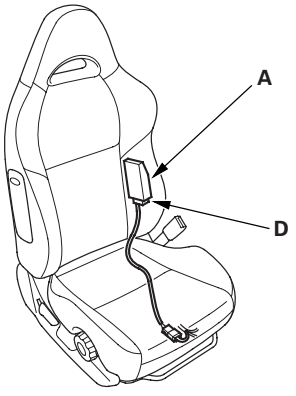

7. Turn the ignition switch ON (II).
8. Check for voltage between the No. 4 terminal of the OPDS unit 8P connector D and body ground. There should be battery voltage.

   '02-04 models

   OPDS UNIT 8P CONNECTOR D

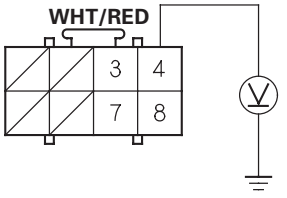

Wire side of female terminals

   '05-06 models

   OPDS UNIT 8P CONNECTOR D

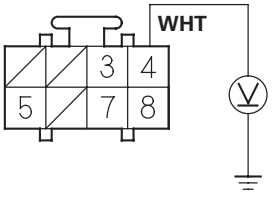

Wire side of female terminals

   Is there battery voltage?

   YES—Go to step 16.

   NO—Open in floor wire harness or in the OPDS unit harness; replace the faulty harness.■

9. Replace the No. 9 (10 A) fuse in the under-dash fuse/relay box.
10. Turn the ignition switch ON (II) for 30 seconds, then turn it OFF.

11. Check the No. 9 (10 A) fuse in under-dash fuse/relay box.

    Is the fuse OK?

    YES—Intermittent failure, system is OK at this time. Go to Troubleshooting Intermittent Failures (see page 23-24). If another DTC is indicated, go to the DTC Troubleshooting Index.

    NO—Go to step 12.

12. Replace the No. 9 (10 A) fuse in the under-dash fuse/relay box.

13. Disconnect the OPDS unit 8P connector D from the OPDS unit (A).

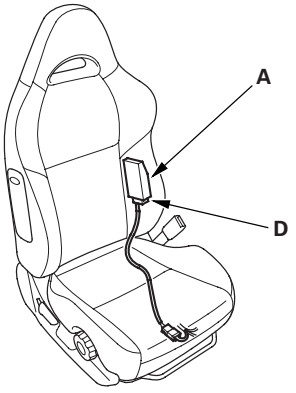

14. Turn the ignition switch ON (II) for 30 seconds, then turn it off.

15. Check the No. 9 (10 A) fuse in the under-dash fuse/relay box.

    Is the fuse OK?

    YES—Short to ground in the OPDS unit; replace the OPDS unit (see page 23-143). ■

    NO—Short to ground in the No. 9 (10 A) circuit. ■

16. Turn the ignition switch OFF.

17. Check resistance between the No. 8 terminal of the OPDS unit 8P connector D and body ground. There should be 0—1.0 Ω.

    '02-04 models

    OPDS UNIT 8P CONNECTOR D

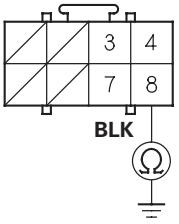

Wire side of female terminals

    '05-06 models

    OPDS UNIT 8P CONNECTOR D

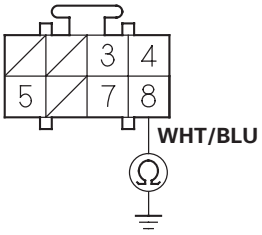

Wire side of female terminals

    Is the resistance as specified?

    YES—Go to step 18.

    NO—Open in floor wire harness, seat subharness (with BOSE sound system), OPDS unit harness, or poor ground G501 (see page 22-59). If the G501 is OK, replace the faulty harness. ■

(cont'd)

DTC Troubleshooting (cont'd)

18. Turn the ignition switch OFF. Disconnect the battery negative cable, and wait for 3 minutes.

19. Disconnect both side airbag connectors (A) and both seat belt buckle tensioner 4P connectors (B).

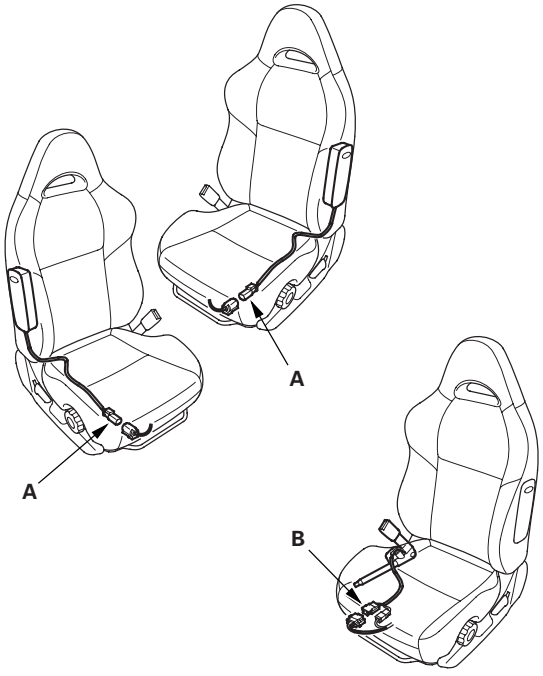

20. Disconnect SRS unit connector B (18P) from the SRS unit.

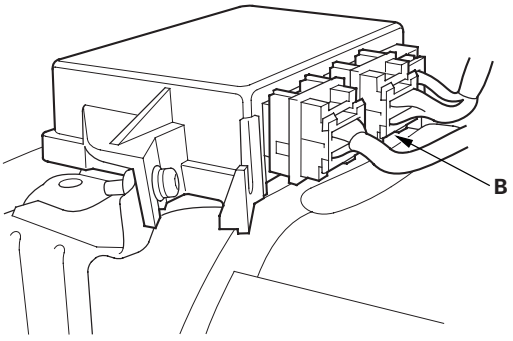

21. Check resistance between the No. 3 terminal of SRS unit connector B (18P) and body ground. There should be an open circuit or at least 1 MΩ.

SRS UNIT CONNECTOR B (18P)

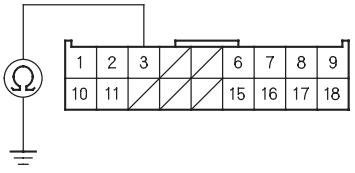

Wire side of female terminals

Is the resistance as specified?

YES—Go to step 22.

NO—Short to ground in the floor wire harness, seat subharness (with BOSE sound system), or in the OPDS unit harness; replace the faulty harness.■

22. Check resistance between the No. 3 terminal of SRS unit connector B (18P) and the No. 7 terminal of the OPDS unit 8P connector D. There should be 0—1.0 Ω.

'02-04 models

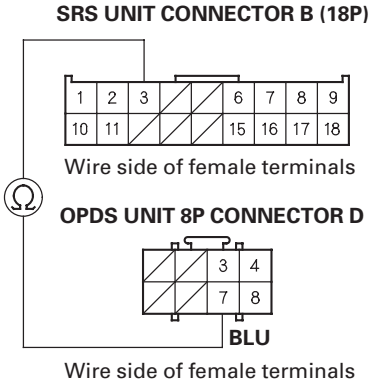

'05-06 models

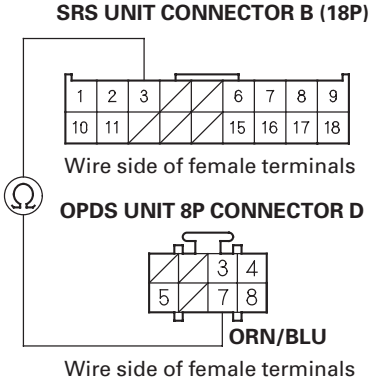

Is the resistance as specified?

YES—Go to step 23.

NO—Open in floor wire harness, seat subharness (with BOSE sound system), or in the OPDS unit harness; replace the faulty harness. ■

23. Disconnect dashboard wire harness 2P connector S from the under-dash fuse/relay box.

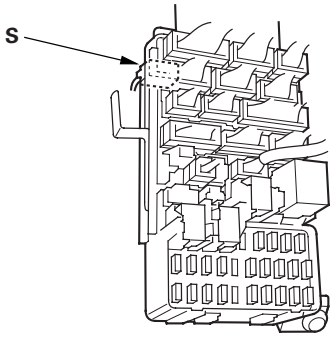

24. Reconnect the negative battery cable.

25. Turn the ignition switch ON (II).

26. Check for voltage between the No. 3 terminal of SRS unit connector B (18P) and body ground. There should be 0.5 V or less.

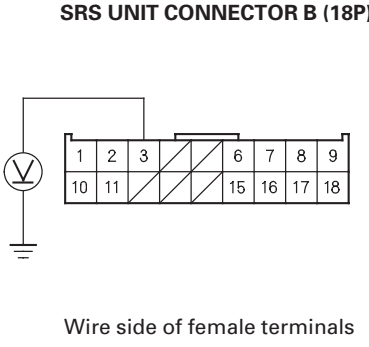

Is the voltage as specified?

YES—Go to step 27.

NO—Short to power in the floor wire harness, in the OPDS unit harness, or seat subharness (with BOSE sound system); replace the faulty harness. ■

(cont'd)

DTC Troubleshooting (cont'd)

27. Replace the OPDS unit (see page 23-143), then initialize the system (see page 23-24).

28. Erase the DTC memory, then check for DTC 15-1.

    Is DTC 15-1 indicated?

    YES—Replace the OPDS sensor/seat-back (see page 20-79). If the problem is still present, replace the SRS unit (see page 23-141).■

    NO—The system is OK.■

DTC 15-2: Faulty Side Airbag Cutoff Indicator Circuit

1. Make sure nothing is on the front passenger's seat.

2. Erase the DTC memory (see page 23-23).

3. Turn the ignition switch ON (II), and check that the SRS indicator comes on for about 6 seconds and then goes off.

   Does the SRS indicator stay on?

   YES—Turn the ignition switch OFF, and go to step 4.

   NO—Intermittent failure, system is OK at this time. Go to Troubleshooting Intermittent Failures (see page 23-24). If another DTC is indicated, go to the DTC Troubleshooting Index.

   NOTE: This DTC may have been caused by turning the ignition switch ON (II) with the gauge assembly disconnected.

4. Turn the ignition switch ON (II), and check that the side airbag cutoff indicator comes on.

   Does the side airbag cutoff indicator come on?

   YES—Go to step 5.

   NO—Go to step 6.

5. Make sure the side airbag cutoff indicator goes off after 5 seconds.

   Does the side airbag cutoff indicator go off after 5 seconds?

   YES—Faulty OPDS unit or SRS unit; replace the OPDS unit (see page 23-143). If the problem is still present, replace the SRS unit (see page 23-141).■

   NO—Go to step 32.

6. Turn the ignition switch OFF.

7. Check the No. 10 (7.5 A) fuse in the under-dash fuse/relay box.

   Is the fuse OK?

   YES—Go to step 8.

   NO—Repair the short to ground in the No. 10 (7.5 A) fuse circuit. ■

8. Disconnect the OPDS unit 8P connector D from the OPDS unit (A) (see page 23-143).

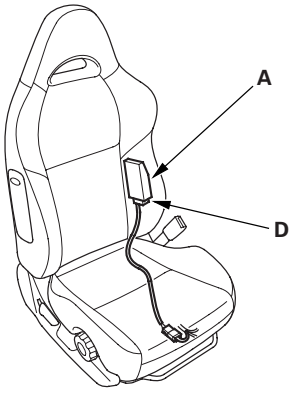

9. Turn the ignition switch ON (II).

10. Check for voltage between the No. 3 terminal of the OPDS unit 8P connector D and body ground. There should be battery voltage.

'02-04 models

OPDS UNIT 8P CONNECTOR D

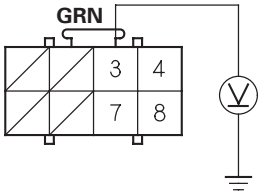

Wire side of female terminals

'05-06 models

OPDS UNIT 8P CONNECTOR D

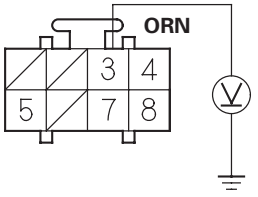

Wire side of female terminals

Is there battery voltage?

YES—Go to step 11.

NO—Go to step 23.

(cont'd)

DTC Troubleshooting (cont'd)

11. Turn the ignition switch OFF.

12. Disconnect the dashboard wire harness 17P connector K from the under-dash fuse/relay box.

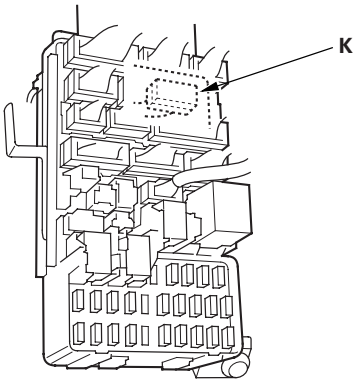

13. Turn the ignition switch ON (II).

14. Check for voltage between the No. 3 terminal of the OPDS unit 8P connector D and body ground. There should be 0.5 V or less.

'02-04 models

OPDS UNIT 8P CONNECTOR D

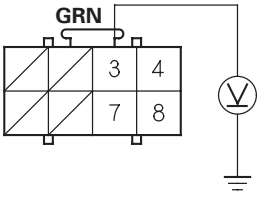

Wire side of female terminals

'05-06 models

OPDS UNIT 8P CONNECTOR D

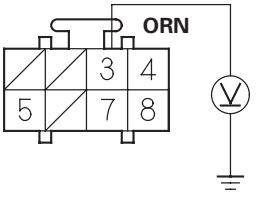

Wire side of female terminals

Is the voltage as specified?

YES—Faulty OPDS unit; replace the OPDS unit (see page 23-143). ■

NO—Go to step 15.

15. Turn the ignition switch OFF.

16. Remove the gauge assembly (see page 22-74), then disconnect gauge assembly connector B (18P*1) or (16P*2) from the gauge assembly.
    * 1: '02-04 models
    * 2: '05-06 models

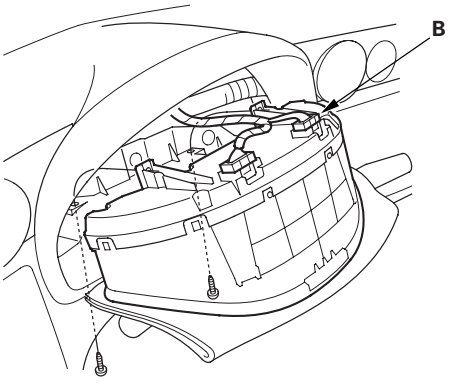

17. Turn the ignition switch ON (II).

18. Check for voltage between the No. 3 terminal of the OPDS unit 8P connector D and body ground. There should be 0.5 V or less.

'02-04 models

OPDS UNIT 8P CONNECTOR D

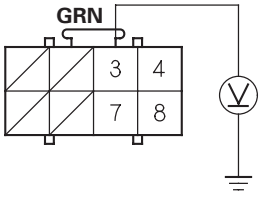

Wire side of female terminals

'05-06 models

OPDS UNIT 8P CONNECTOR D

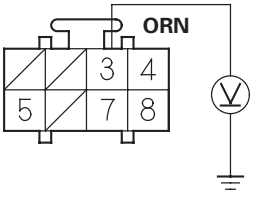

Wire side of female terminals

Is the voltage as specified?

YES—Short to power in the gauge assembly; replace the gauge assembly. ■

NO—Go to step 19.

(cont'd)

DTC Troubleshooting (cont'd)

19. Turn the ignition switch OFF.

20. Disconnect the floor wire harness 21P*1 or 20P*2 connector (A) from the dashboard wire harness connector C503 (B).
    * 1: '02-04 models
    * 2: '05-06 models

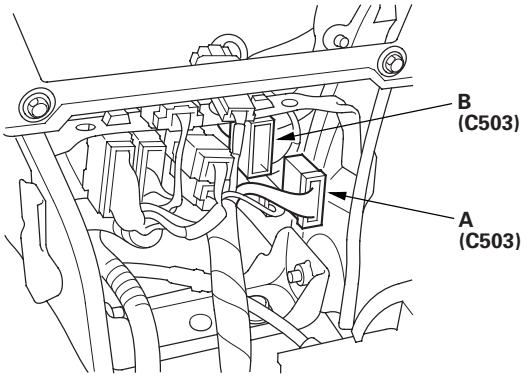

21. Turn the ignition switch ON (II).

22. Check for voltage between the No. 3 terminal of the OPDS unit 8P connector D and body ground. There should be 0.5 V or less.

'02-04 models

OPDS UNIT 8P CONNECTOR D

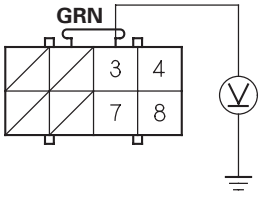

Wire side of female terminals

'05-06 models

OPDS UNIT 8P CONNECTOR D

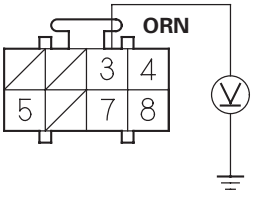

Wire side of female terminals

Is the voltage as specified?

YES—Short to power in the dashboard wire harness; replace the dashboard wire harness. ■

NO—Short to power in the floor wire harness or in the OPDS unit harness, or seat subharness (with BOSE sound system); if the OPDS unit harness is OK, replace the floor wire harness. ■

23. Turn the ignition switch OFF.

24. Remove the gauge assembly (see page 22-74).
With the connectors still connected to the gauge assembly, backprobe the No. 8 *1 or No. 7 *2 terminal of gauge assembly connector B (18P *1) or (16P *2).
* 1: '02-04 models
* 2: '05-06 models

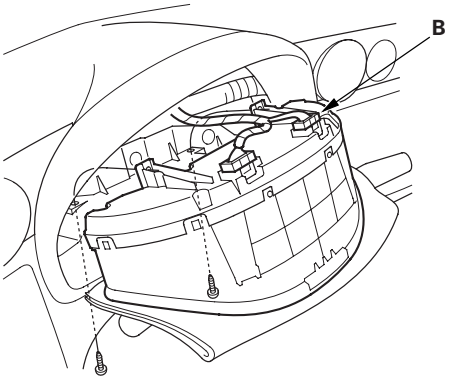

25. Turn the ignition switch ON (II).

26. Check for voltage between the No. 8 *1 or No. 7 *2 terminal of gauge assembly connector B (18P *1) or (16P *2) and body ground. There should be battery voltage.
* 1: '02-04 models
* 2: '05-06 models

'02-04 models

GAUGE ASSEMBLY CONNECTOR B (18P)

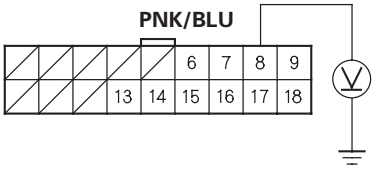

Wire side of female terminals

'05-06 models

GAUGE ASSEMBLY CONNECTOR B (18P)

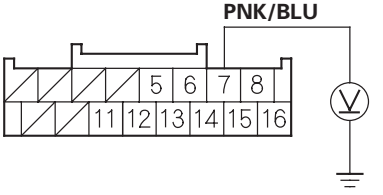

Wire side of female terminals

Is there battery voltage?

YES—Go to step 27.

NO—Go to step 31.

(cont'd)

DTC Troubleshooting (cont'd)

27. Turn the ignition switch OFF.

28. Disconnect the floor wire harness 21P*1 or 20P*2 connector C503 (A) from the dashboard wire harness connector C503 (B).
    * 1: '02-04 models
    * 2: '05-06 models

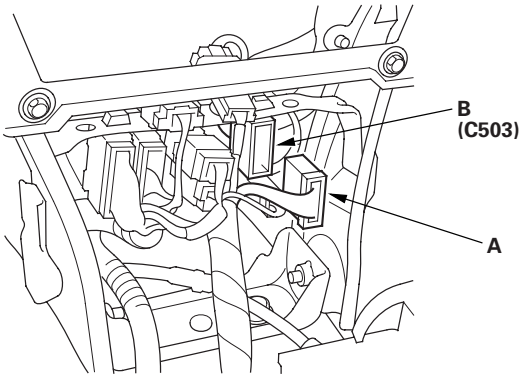

29. Turn the ignition switch ON (II).

30. Check for voltage between the No. 2*1 or No. 11*2 terminal of the dashboard wire harness 21P*1 or 20P*2 connector C503 and body ground. There should be battery voltage.
    * 1: '02-04 models
    * 2: '05-06 models

'02-04 models

DASHBOARD WIRE HARNESS 21P CONNECTOR C503

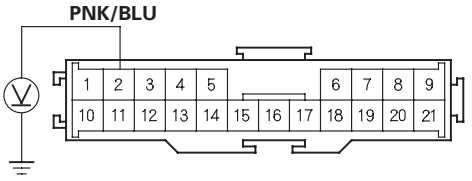

Terminal side of male terminals

'05-06 models

DASHBOARD WIRE HARNESS 20P CONNECTOR C503

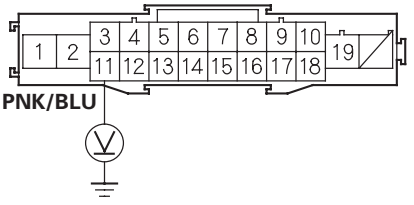

Terminal side of male terminals

Is there battery voltage?

YES—Poor connection at the dashboard wire harness 21P*1 or 20P*2 and floor wire harness 21P*1 or 20P*2 connectors, an open in floor wire harness, seat subharness (with BOSE sound system), or OPDS unit harness. Check the connection; if the connection is OK, replace the faulty harness. ■

NO—Poor connection at gauge assembly connector B (18P*1) or (16P*2) or an open in dashboard wire harness. Check gauge assembly connector B (18P*1) or (16P*2); if the connections are OK, replace the dashboard wire harness. ■
* 1: '02-04 models
* 2: '05-06 models

31. Check for voltage between the No. 7 *1 or No. 6 *2 terminal of gauge assembly connector B (18P *1) or (16P *2) and body ground. There should be battery voltage.
    * 1: '02-04 models
    * 2: '05-06 models

'02-04 models

GAUGE ASSEMBLY CONNECTOR B (18P)

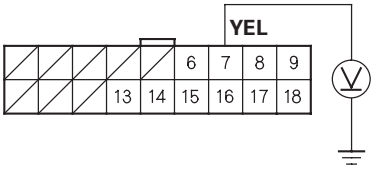

Wire side of female terminals

'05-06 models

GAUGE ASSEMBLY CONNECTOR B (16P)

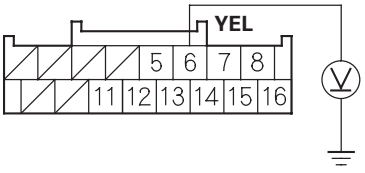

Wire side of female terminals

Is there battery voltage?

YES—Faulty side airbag cutoff indicator circuit; replace the gauge assembly. ■

NO—Open in dashboard wire harness; replace the dashboard wire harness. ■

32. Turn the ignition switch OFF.

33. Disconnect the OPDS unit 8P connector D from the OPDS unit (A) (see page 23-143).

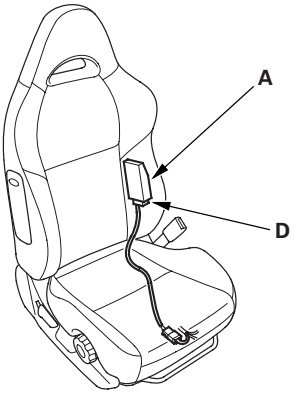

34. Turn the ignition switch ON (II).

    Does the side airbag cutoff indicator come on?

    YES—Go to step 35.

    NO—Faulty OPDS unit; replace the OPDS unit. ■

35. Turn the ignition switch OFF.

36. Remove the gauge assembly (see page 22-74), then disconnect gauge assembly connector B (18P *1) or (16P *2) from the gauge assembly.
    * 1: '02-04 models
    * 2: '05-06 models

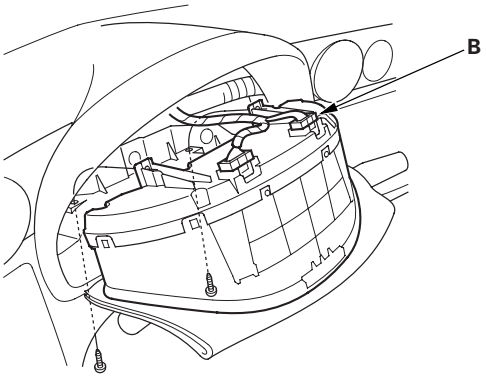

(cont'd)

DTC Troubleshooting (cont'd)

37. Check resistance between the No. 8 *1 or No. 7 *2 terminal of gauge assembly connector B (18P *1) or (16P *2) and body ground. There should be an open circuit or at least 1 MΩ.
    * 1: '02-04 models
    * 2: '05-06 models

'02-04 models

GAUGE ASSEMBLY CONNECTOR B (18P)

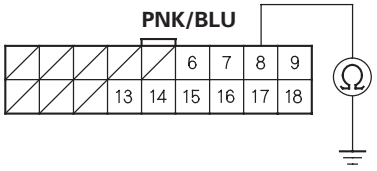

Wire side of female terminals

'05-06 models

GAUGE ASSEMBLY CONNECTOR B (16P)

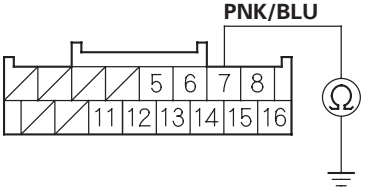

Wire side of female terminals

Is the resistance as specified?

YES—Short to ground in the side airbag cutoff indicator circuit; replace the gauge assembly. ■

NO—Short to ground in dashboard wire harness A, the floor wire harness, seat subharness (with BOSE sound system), or the OPDS unit harness; replace the faulty harness. ■

DTC 15-3: Faulty OPDS Sensor

NOTE: Aftermarket devices (fluorescent lights, laptop computers, etc.) used near the front passenger's seat-back can interfere with the seat-back sensors and cause a false DTC 15-3. If one of these devices was used, erase the DTC, operate the device near the seat-back, and recheck for DTCs. If DTC 15-3 is reset, erase it, and do not use the device near the seat-back.

1. Erase the DTC memory (see page 23-23).

2. Turn the ignition switch ON (II), and check that the SRS indicator comes on for about 6 seconds and then goes off.

   Does the SRS indicator stay on?

   YES—Go to step 3.

   NO—Intermittent failure, system is OK at this time. Go to Troubleshooting Intermittent Failures (see page 23-24). If another DTC is indicated, go to the DTC Troubleshooting Index.

3. Check the connection at the OPDS sensor harness connector and the OPDS unit connector.

   Are the connections OK?

   YES—Go to step 4.

   NO—Reconnect the OPDS sensor harness connector, and clear the DTC. ■

4. Replace the OPDS sensor/seat-back foam (see page 20-79), and reinitialize the OPDS system (see page 23-24).

5. Erase the DTC memory, then check for DTC 15-3.

   Is DTC 15-3 indicated?

   YES—Replace the OPDS unit (see page 23-143). ■

   NO—The system is OK. ■

Symptom Troubleshooting

SRS indicator does not come on

1. Turn the ignition switch ON (II), and see if the other indicators come on (brake system, etc.).

   Do the other indicators come on?

   YES—Go to step 2.

   NO—Go to step 8.

2. Turn the ignition switch OFF, then remove the gauge assembly (see page 22-74). Disconnect gauge assembly connector A (22P*1) or (20P*2), and B (18P*1) or (16P*2) from the gauge assembly.
   * 1: '02-04 models
   * 2: '05-06 models

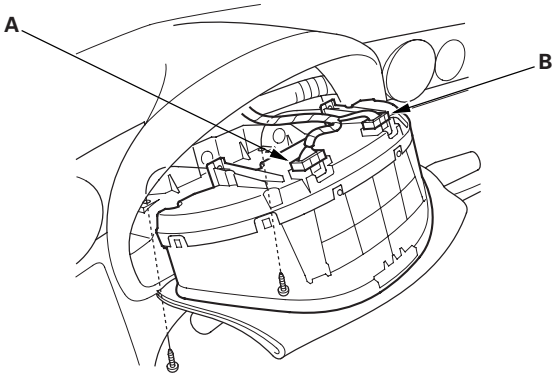

3. Check resistance between the No. 18*1 or No. 16*2 terminal of gauge assembly connector B (18P*1) or (16P*2) and body ground. There should be 0—1.0 Ω.
   * 1: '02-04 models
   * 2: '05-06 models

'02-04 models

GAUGE ASSEMBLY CONNECTOR B (18P)

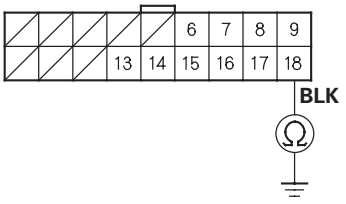

Wire side of female terminals

'05-06 models

GAUGE ASSEMBLY CONNECTOR B (16P)

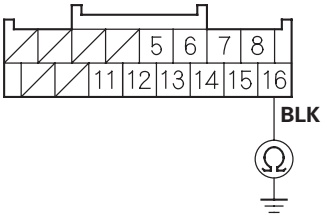

Wire side of female terminals

Is the resistance as specified?

YES—Go to step 4.

NO—Open in BLK wire of the dashboard wire harness or faulty body ground terminal (G401) (see page 22-59). If the body ground terminal is OK, replace the dashboard wire harness. ■

(cont'd)

Symptom Troubleshooting (cont'd)

4. Check for voltage between the No. 15 *1 or No. 13 *2 terminal of gauge assembly connector A (22P *1) or (20P *2) and body ground within the first 6 seconds after turning the ignition switch ON (II). There should be 8.5 V or less.
   * 1: '02-04 models
   * 2: '05-06 models

'02-04 models

GAUGE ASSEMBLY CONNECTOR A (22P)

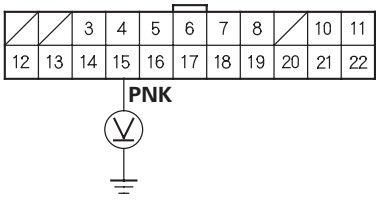

Wire side of female terminals

'05-06 models

GAUGE ASSEMBLY CONNECTOR A (20P)

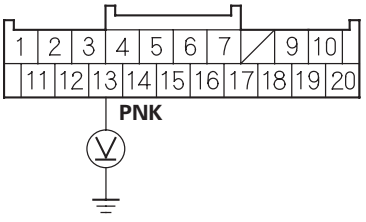

Wire side of female terminals

Is the voltage as specified?

YES—Faulty SRS indicator circuit in the gauge assembly; replace the gauge assembly. ■

NO—Go to step 5.

5. Turn the ignition switch OFF.

6. Disconnect SRS unit connector C (8P) from the SRS unit.

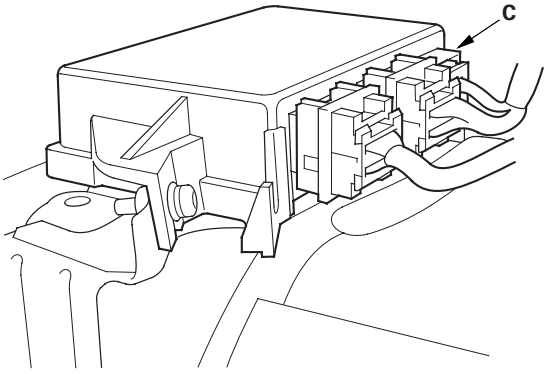

7. Disconnect gauge assembly connector A (22P*1) or (20P*2). Connect a voltmeter between the No. 15*1 or No. 13*2 terminal of gauge assembly connector A (22P*1) or (20P*2) and body ground. Turn the ignition switch ON (II), and measure voltage. There should be 0.5 V or less.
   * 1: '02-04 models
   * 2: '05-06 models

'02-04 models

GAUGE ASSEMBLY CONNECTOR A (22P)

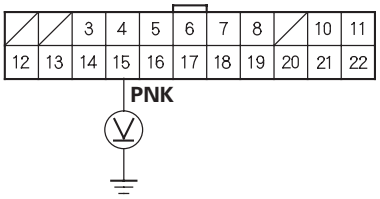

Wire side of female terminals

'05-06 models

GAUGE ASSEMBLY CONNECTOR A (20P)

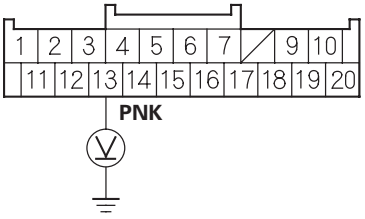

Wire side of female terminals

Is the voltage as specified?

YES—Faulty SRS unit; replace the SRS unit (see page 23-141).■

NO—Short to power in the PNK wire of the dashboard wire harness or in the floor wire harness; replace the faulty harness.■

8. Turn the ignition switch OFF. Check the No. 10 (7.5 A) fuse in the under-dash fuse/relay box.

   Is fuse No. 10 (7.5 A) blown?

   YES—Go to step 10.

   NO—Go to step 9.

(cont'd)

Symptom Troubleshooting (cont'd)

9. Connect a voltmeter between the No. 7 *1 or No. 6 *2 terminal of gauge assembly connector B (18P *1) or (16P *2) and body ground. Turn the ignition switch ON (II), and measure the voltage. There should be battery voltage.
   * 1: '02-04 models
   * 2: '05-06 models

'02-04 models

GAUGE ASSEMBLY CONNECTOR B (18P)

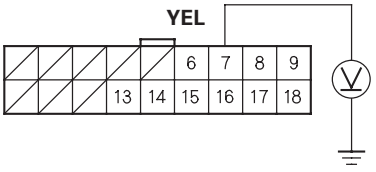

Wire side of female terminals

'05-06 models

GAUGE ASSEMBLY CONNECTOR B (16P)

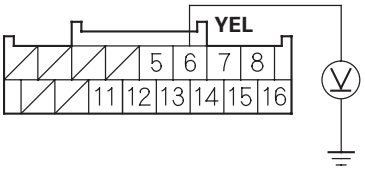

Wire side of female terminals

Is there battery voltage?

YES—Faulty SRS indicator circuit in the gauge assembly or poor connection at gauge assembly connector B (18P *1) or (16P *2) and gauge assembly; if the connection is OK, replace the gauge assembly. ■

NO—Open in the under-dash fuse/relay box No. 10 (7.5 A) fuse circuit, or open in YEL wire of dashboard wire harness. If the under-dash fuse/relay box is OK, replace the faulty harness. ■
* 1: '02-04 models
* 2: '05-06 models

10. Replace the No. 10 (7.5 A) fuse, and check to see if the SRS indicator comes on.

    Does the SRS indicator come on?

    YES—The system is OK at this time. ■

    NO—Repair the short to ground in the under-dash fuse/relay box No. 10 (7.5 A) fuse circuit. ■

SRS indicator stays on, but no DTCs are stored

NOTE:
- A new SRS unit must sense the entire system is OK before completing its initial self-test. The most common cause of an incomplete self-test is the failure to replace all deployed parts after a collision, in particular seat belt tensioners, or seat belt buckle tensioners.
- A battery/system voltage above 15.2 V can cause the SRS indicator to come on without storing any DTCs.

1. Disconnect the battery negative cable, and wait for 3 minutes.

2. Disconnect SRS unit connector B (8P) from the SRS unit.

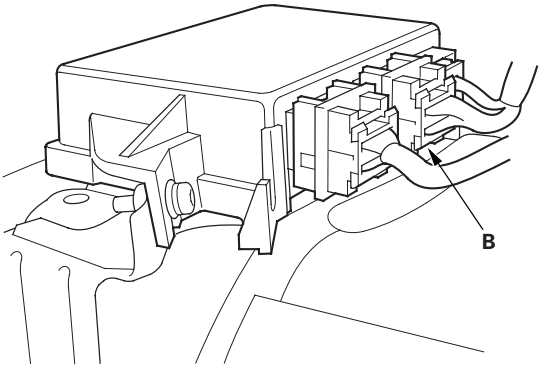

3. Remove the gauge assembly (see page 22-74). Disconnect gauge assembly connector A (22P*1) or (20P*2) from the gauge assembly.
   * 1: '02-04 models
   * 2: '05-06 models

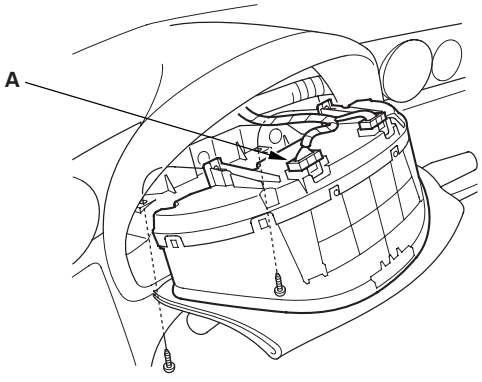

4. Check resistance between the No. 15*1 or No. 13*2 terminal of gauge assembly connector A (22P*1) or (20P*2) and the No. 5 terminal of SRS unit connector C (8P). There should be 1 Ω or less.
   * 1: '02-04 models
   * 2: '05-06 models

'02-04 models

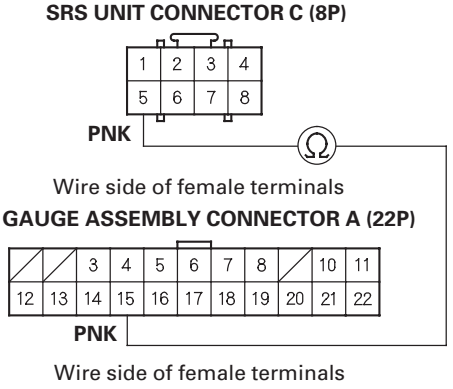

'05-06 models

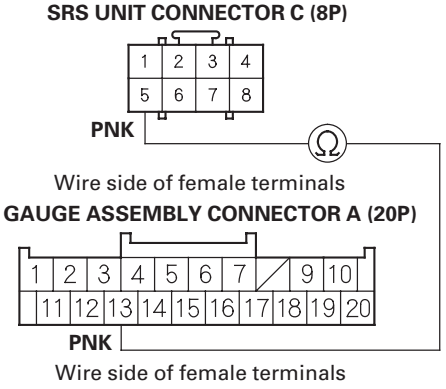

Is the resistance as specified?

YES—Go to step 5.

NO—Open in floor wire harness or dashboard wire harness; replace the faulty wire harness. ■

(cont'd)

Symptom Troubleshooting (cont'd)

5. Reconnect the battery negative cable.

6. Reconnect gauge assembly connector A (22P*1) or (20P*2) to the gauge assembly.
   * 1: '02-04 models
   * 2: '05-06 models

7. Turn the ignition switch ON (II).

8. Install a jumper wire between the No. 15*1 or No. 13*2 terminal of the gauge assembly connector A (22P*1) or (20P*2) and the No. 7*1 or No. 6*2 terminal of the gauge assembly connector B (18P*1) or (16P*2). The SRS indicator should go off.
   * 1: '02-04 models
   * 2: '05-06 models

'02-04 models

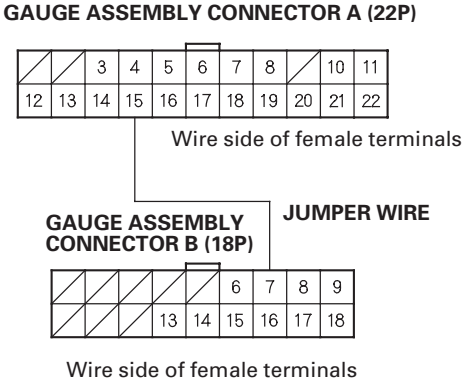

'05-06 models

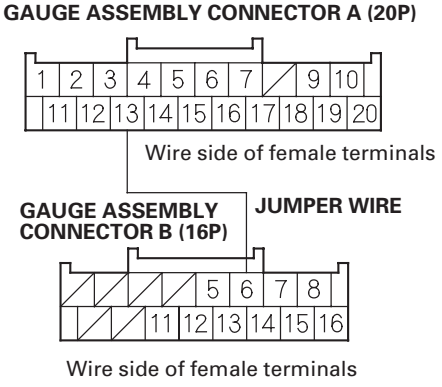

Does the SRS indicator go off?

YES—Faulty SRS unit or poor connection at SRS unit connector C (8P) and the SRS unit; check the connection. If the connection is OK, replace the SRS unit (see page 23-141). ■

NO—Faulty SRS indicator circuit in the gauge assembly or poor connection at gauge assembly connector A or B; check the connections. If the connectors are OK, replace the gauge assembly. ■

Component Replacement/Inspection After Deployment

NOTE: Before doing any SRS repairs, use the HDS SRS menu method to check for DTCs; refer to the DTC Troubleshooting Index for the less obvious deployed parts (seat belt tensioners, front impact sensors, side airbag sensors, etc.).

After a collision where the seat belt tensioners deployed, replace these items:
- Seat belt tensioners
- Seat belt buckle tensioners
- SRS unit
- Front impact sensors

After a collision where the frontal airbag(s) deployed, replace these items:
- SRS unit
- Deployed airbag(s)
- Seat belt tensioners
- Seat belt buckle tensioners
- Front impact sensors

After a collision where the side airbag(s) deployed, replace these items:
- SRS unit
- Deployed side airbag(s)
- Side impact sensor(s) for side(s) deployed

During the repair process, inspect these areas:
- Inspect all the SRS wire harnesses. Replace, don't repair, any damaged harnesses.
- Inspect the cable reel for heat damage. If there is any damage, replace the cable reel.

After the vehicle is completely repaired, turn the ignition switch ON(II). If the SRS indicator comes on for about 6 seconds and then goes off, the SRS airbag system is OK. If the indicator does not function properly, use the HDS SRS menu method to read the DTC(s). If this doesn't retrieve any codes, use the HDS SCS menu method. If you still cannot retrieve a code, go to SRS Indicator Circuit Troubleshooting.

Driver's Airbag Replacement

Removal

1. Disconnect the battery negative cable, and wait at least 3 minutes before beginning work.

2. Remove the access panel (A) from the steering wheel, then disconnect the driver's airbag 4P connector (B) from the cable reel.

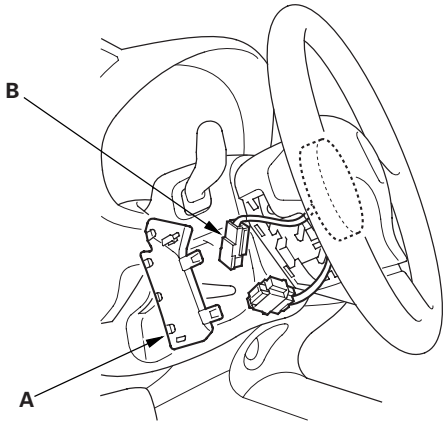

3. Remove the two Torx bolts (A) using a Torx T30 bit. Then remove the driver's airbag (B).

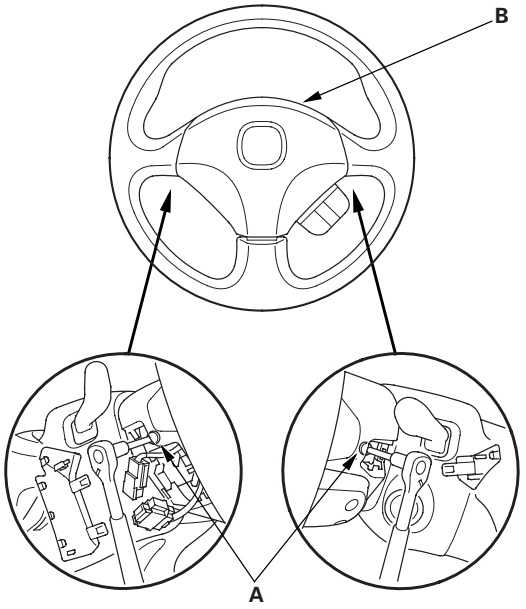

Installation

1. Place the new driver's airbag (A) in the steering wheel, and secure it with new Torx bolts (B).

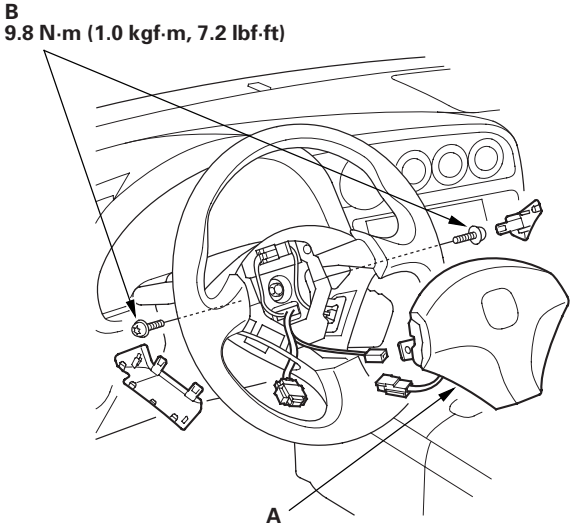

2. Connect the cable reel to the driver's airbag 4P connector (A), then install the access panel (B) on the steering wheel.

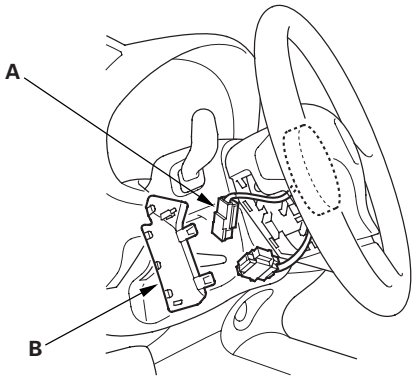

3. Connect the battery negative cable.

4. After installing the airbag, confirm proper system operation:

   - Turn the ignition switch ON (II); the SRS indicator should come on for about 6 seconds and then go off.
   - Make sure the horn works.

Front Passenger's Airbag Replacement

Removal

1. Disconnect the battery negative cable, and wait at least 3 minutes before beginning work.

2. Remove the glove box (see page 20-67).

3. Disconnect the front passenger's airbag 4P connector (A) from the dashboard wire harness.

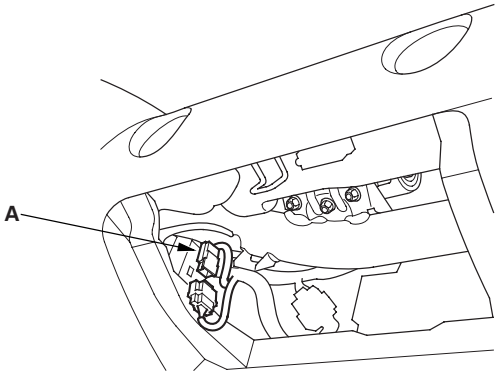

4. Remove the three mounting nuts (A) from the bracket. Cover the lid and dashboard with a cloth, and pry carefully with a screwdriver to lift the front passenger's airbag (B) out of the dashboard.

   NOTE: The airbag lid has pawls on its side which attach it to the dashboard.

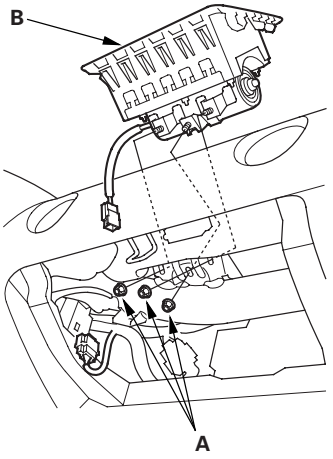

Installation

1. Place the new front passenger's airbag (A) into the dashboard. Tighten the front passenger's airbag mounting nuts (B).

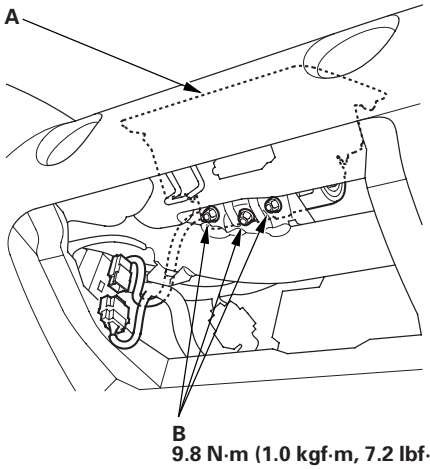

9.8 N·m (1.0 kgf·m, 7.2 lbf·ft)

2. Connect the front passenger's airbag 4P connector (A) to the dashboard wire harness, then reinstall the glove box.

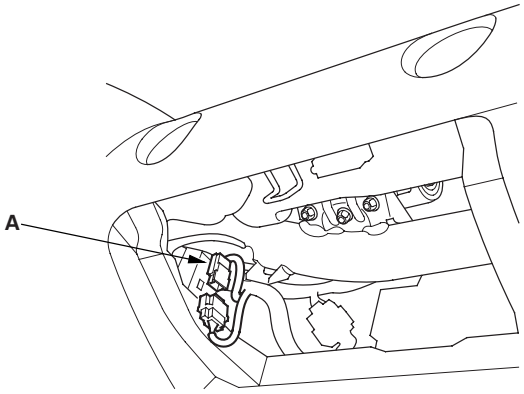

3. Reconnect the battery negative cable.

4. After installing the airbag, confirm proper system operation: Turn the ignition switch ON (II); the SRS indicator should come on for about 6 seconds and then go off.

Side Airbag Replacement

NOTE: Review the front seat removal/installation procedure (see page 20-75) before performing repair or service.

Removal

1. Disconnect the battery negative cable, and wait at least 3 minutes before beginning work.

2. Disconnect the side airbag harness 2P connector (A).

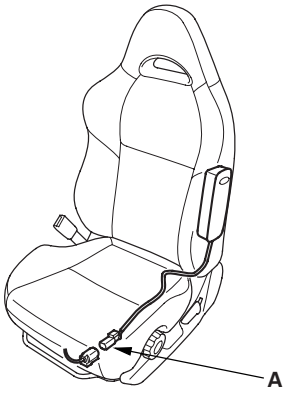

3. Remove the seat assembly (see page 20-75) and seat-back cover (see page 20-79).

4. Remove the mounting nut (A) and the side airbag (B).

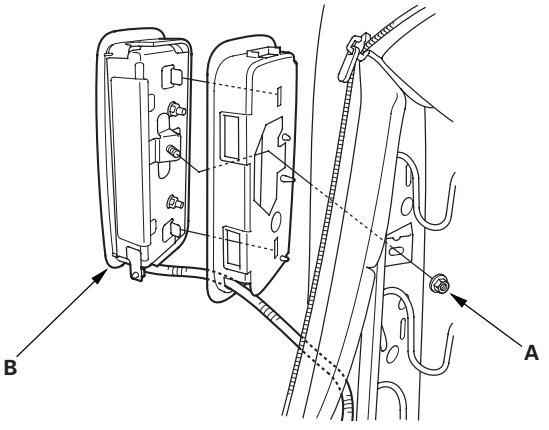

Installation

NOTE:
- If the side airbag lid is secured by tape, remove the tape.
- Do not open the lid of the side airbag cover.
- Use new mounting nuts tightened to the specified torque.
- Make sure that the seat-back cover is installed properly. Improper installation may prevent proper deployment.
- Be sure to install the harness wires so that they are not pinched or interfering with other parts.

1. Place the new side airbag on the seat-back frame (A). Tighten the side airbag mounting nut (B).

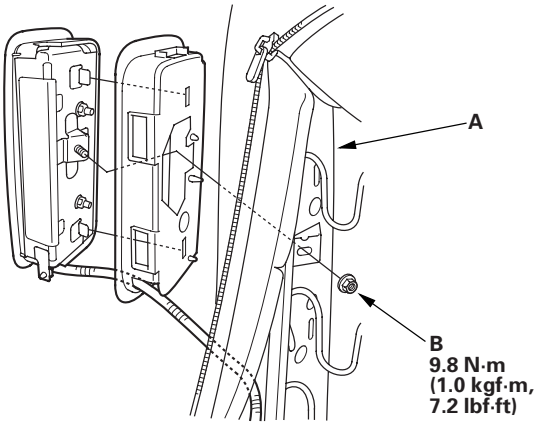

2. Install the seat-back cover (see page 20-79).

3. Install the seat assembly (see page 20-75), then connect the side airbag harness 2P connector.

4. Move the seat cushion and the seat-back through their full ranges of movement, making sure the harness wires are not pinched or interfering with other parts.

5. Reconnect the battery negative cable.

6. After installing the side airbag, confirm proper system operation: Turn the ignition switch ON (II); the SRS indicator should come on for about 6 seconds and then go off.

Airbag Disposal

Special Tools Required
Deployment tool 07HAZ-SG00500

Before scrapping any airbags, side airbags, seat belt tensioners, or seat belt buckle tensioners (including those in a whole vehicle to be scrapped), the airbags, side airbags, seat belt tensioners, or seat belt buckle tensioners must be deployed. If the vehicle is still within the warranty period, the Acura District Parts and Service Manager must give approval and/or special instruction before deploying the airbags, side airbags, seat belt tensioners, or seat belt buckle tensioners. Only after the airbags, side airbags, seat belt tensioners, or seat belt buckle tensioners have been deployed (as the result of vehicle collision, for example), can they be scrapped. If the airbags, side airbags, seat belt tensioners, and seat belt buckle tensioners appear intact (not deployed), treat them with extreme caution. Follow this procedure.

Deploying Airbags in the Vehicle

If an SRS equipped vehicle is to be entirely scrapped, its airbags, side airbags, seat belt tensioners, and seat belt buckle tensioners should be deployed while still in the vehicle. The airbags, side airbags, seat belt tensioners, and seat belt buckle tensioners should not be considered as salvageable parts and should never be installed in another vehicle.

1. Turn the ignition switch OFF, then disconnect the battery negative cable, and wait at least 3 minutes.

2. Confirm that each airbag, side airbag, or seat belt tensioner is securely mounted.

3. Confirm that the deployment tool is functioning properly by following the check procedure on the tool label.

Driver's Airbag

4. Remove the access panel (A) from the steering wheel, then disconnect the driver's airbag 4P connector (B) from the cable reel.

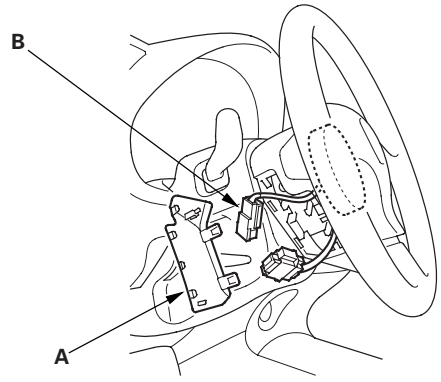

Front Passenger's Airbag

5. Remove the glove box, then disconnect the front passenger's airbag 4P connector (A) and dashboard wire harness.

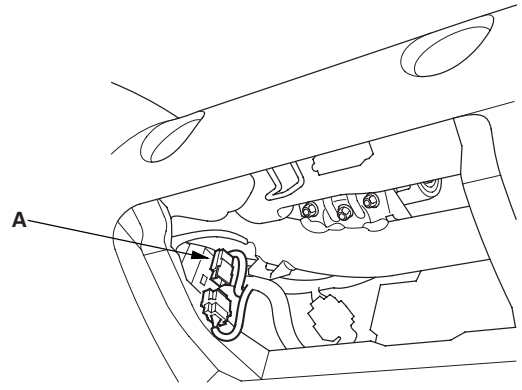

(cont'd)

Airbag Disposal (cont'd)

Side Airbag

6. Disconnect the side airbag 2P connector (A) from the floor wire harness.

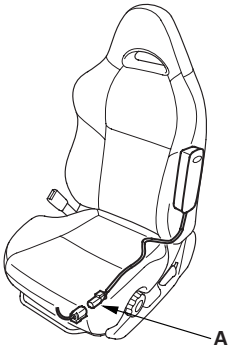

Seat belt tensioner

7. Disconnect the seat belt tensioner 2P connector (A) from floor wire harness. Pull the seat belt out all the way and cut it.

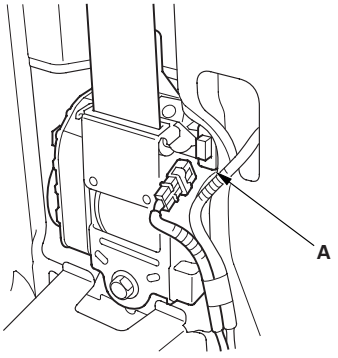

Seat belt buckle tensioner

8. Disconnect the seat belt buckle tensioner 4P connector (A) from floor wire harness.

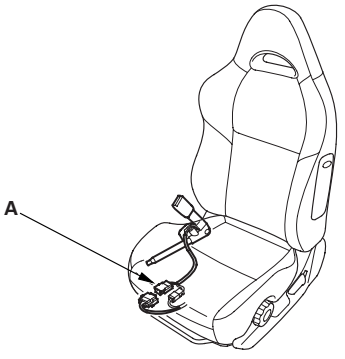

9. Cut off each connector, strip the ends of the wires, and connect the deployment tool alligator clips (A) to the wires. Place the deployment tool at least 30 feet (10 meters) away from the vehicle.

   NOTE: The driver's airbag and the front passenger's airbag each have four wires, two yellow and two red. Twist each pair of unlike colored wires together, and connect an alligator clip to each pair.

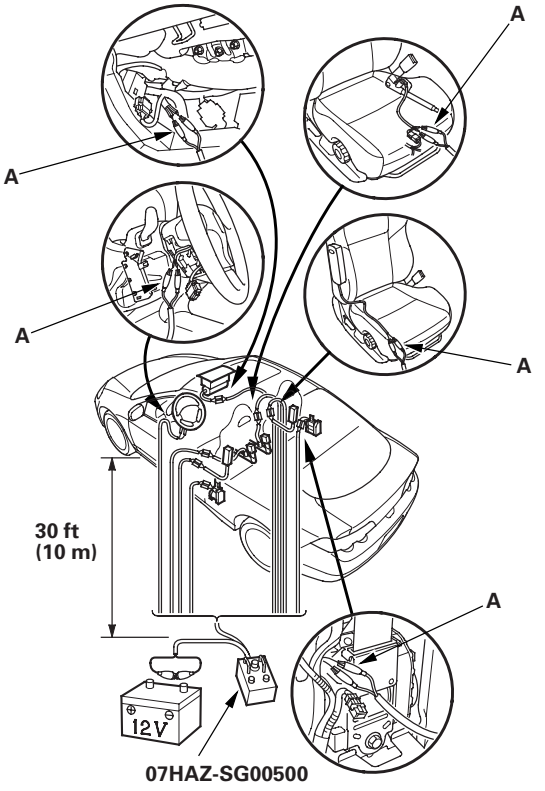

10. Connect a 12 volt battery to the tool.

    - If the green light on the tool comes on, the igniter circuit is defective and cannot deploy the component. Go to Disposal of Damaged Components.
    - If the red light on the tool comes on, the component is ready to be deployed.

11. Push the tool's deployment switch. The airbags and tensioners should deploy (deployment is both highly audible and visible: a loud noise and rapid inflation of the bag, followed by slow deflation).

    - If the components deploy and the green light on the tool comes on, continue with this procedure.
    - If a component doesn't deploy, yet the green light comes ON, its igniter is defective. Go to Disposal of Damaged Components.
    - During deployment, the airbag can become hot enough to burn you. Wait 30 minutes after deployment before touching the airbag.

12. Dispose of the complete airbag. No part of it can be reused. Place it in a sturdy plastic bag (A), and seal it securely. Dispose of the deployed airbag according to your local regulations.

Deploying Components Out of the Vehicle

If an intact airbag or tensioner has been removed from a scrapped vehicle, or has been found defective or damaged during transit, storage, or service, it should be deployed as follows:

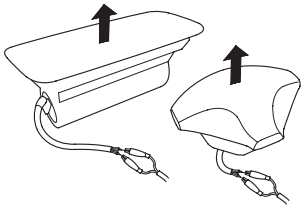

1. Confirm that the deployment tool is functioning properly by following the check procedure or on the tool label.
2. Position the airbag face up, outdoors, on flat ground, at least 30 feet (10 meters) away from any obstacles or people.
3. Follow steps 9 through 12 of the in-vehicle deployment procedure.

Disposal of Damaged Components

1. If installed in a vehicle, follow the removal procedure for the driver's airbag (see page 23-130), front passenger's airbag (see page 23-132), side airbag (see page 23-134), seat belt tensioner (see page 23-4), and seat belt buckle tensioner (see page 23-5).
2. In all cases, make a short circuit by cutting, stripping, and twisting together the 2 inflator wires. NOTE: The driver's and passenger's airbag each have four wires: twist each pair of like-colored wires together.
3. Package the component in exactly the same packaging that the new replacement part came in.
4. Mark the outside of the box ''DAMAGED AIRBAG NOT DEPLOYED'', ''DAMAGED SIDE AIRBAG NOT DEPLOYED'', ''DAMAGED SEAT BELT TENSIONER NOT DEPLOYED'', or ''DAMAGED SEAT BELT BUCKLE TENSIONER NOT DEPLOYED'' so it does not get confused with your parts stock.
5. Contact your Acura District Parts and Service Manager for how and where to return it for disposal.

Deployment Tool Check

1. Connect the yellow clips to both switch protector handles on the tool; connect the tool to a battery.
2. Push the operation switch: green means the tool is OK; red means the tool is faulty.
3. Disconnect the battery and the yellow clips.

Cable Reel Replacement

Removal

1. Make sure the front wheels are aligned straight ahead.

2. Disconnect the battery negative cable, and wait at least 3 minutes.

3. Remove the driver's airbag (see page 23-130).

4. Disconnect the connector (A) from the cruise control set/resume switch, then remove the steering wheel bolt (B).

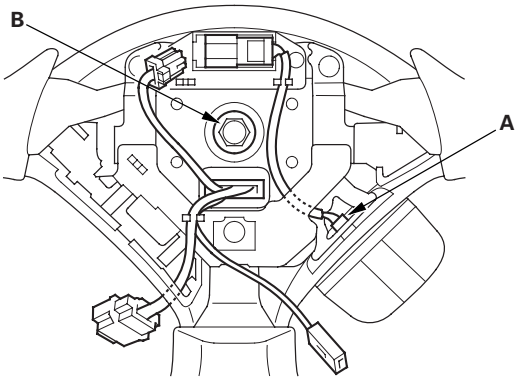

5. Align the front wheels straight ahead, then remove the steering wheel with a steering wheel puller (see step 3 on page 17-22). Do not tap on the steering wheel or steering column shaft when removing the steering wheel.

6. Remove the dashboard lower cover (A).

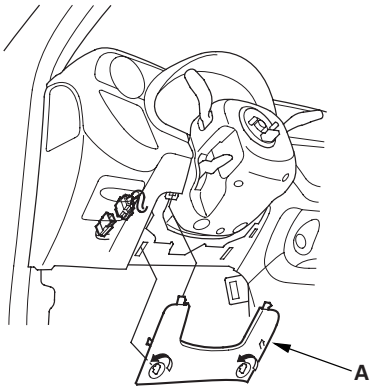

7. Remove the column cover screws (A), then remove the column covers (B, C).

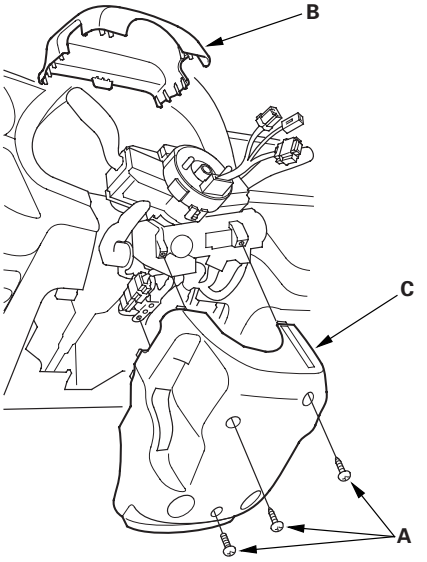

8. Disconnect the dashboard wire harness 4P connector (A) from the cable reel 4P connector (B), then disconnect the dashboard wire harness 5P connector (C) from the cable reel (D).

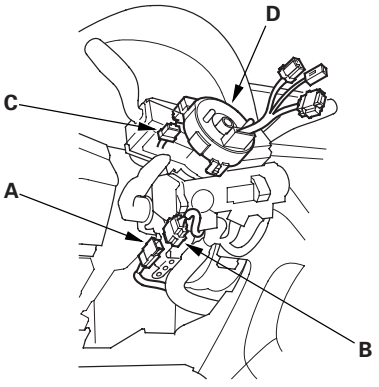

9. Release the lock tab (A) under the cable reel connector with a 90° hook shaped tool (B). Slide the tool below the cable reel connector just above the lock tab. Release the lower lock tab (C), and slide the cable reel off the column.

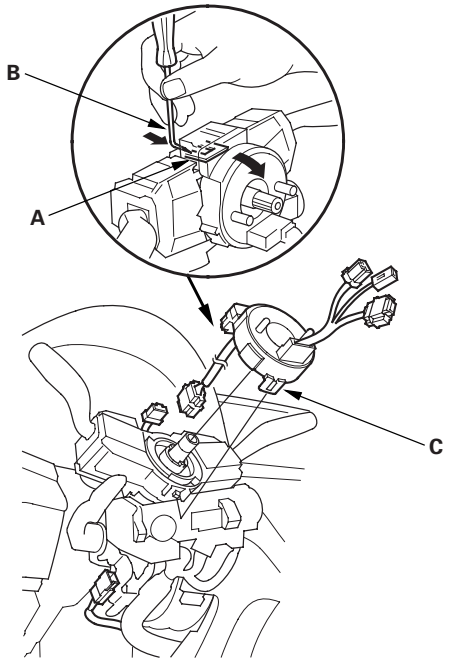

Installation

1. Before installing the steering wheel, align the front wheels straight ahead.

2. Disconnect the battery negative cable, and wait at least 3 minutes.

3. Set the turn signal canceling sleeve (A) so that the projections (B) are aligned vertically.

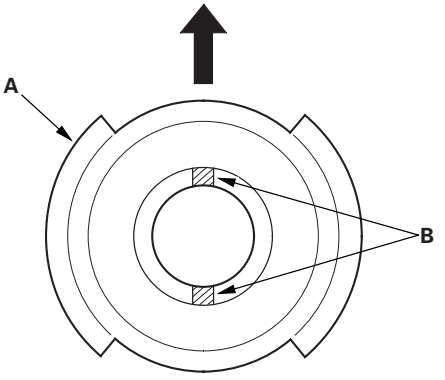

4. Carefully install the cable reel (A) on the steering column shaft. Then connect the 5P connector (B) to the cable reel, and connect the 4P connector (C) to the dashboard wire harness 4P connector (D).

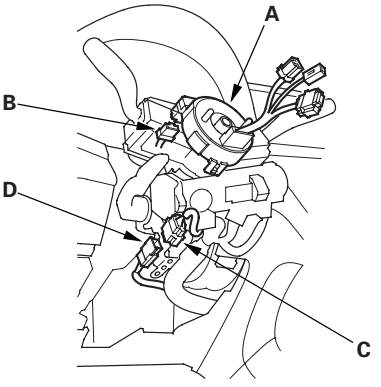

(cont'd)

Cable Reel Replacement (cont'd)

5. Install the steering column covers.

6. If necessary, center the cable reel. (New replacement cable reels come centered.) Do this by first rotating the cable reel clockwise until it stops. Then rotate it counterclockwise (approximately 2 1/2 turns) until the arrow mark on the cable reel label points straight up.

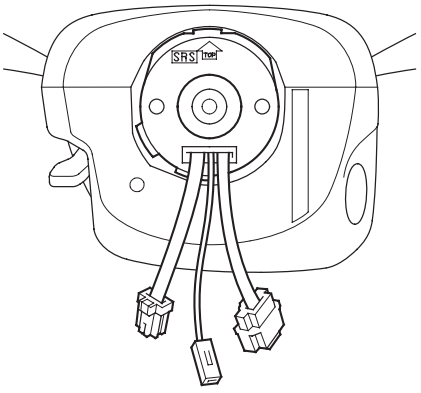

7. Align the projections on the cable reel with the holes on the steering wheel (see step 2 on page 17-24), and install the steering wheel with a new steering wheel bolt (A).

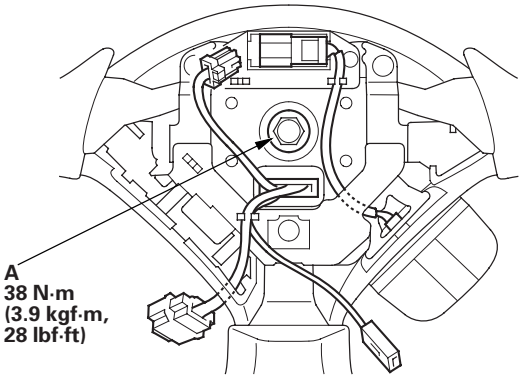

8. Install the driver's airbag (see page 23-131).

9. Reconnect the battery negative cable.

10. After installing the cable reel, confirm proper system operation:

    - Turn the ignition switch ON (II); the SRS indicator should come on for about 6 seconds and then go off.
    - After the SRS indicator has turned off, turn the steering wheel fully left and right to confirm the SRS indicator does not come on.
    - Make sure the horn works.

SRS Unit Replacement

Removal

1. Disconnect the battery negative cable, and wait at least 3 minutes before beginning work.

2. Disconnect the driver's and front passenger's airbag connectors (see page 23-18).

3. Disconnect the side airbag connectors (see page 23-18).

4. Disconnect both seat belt tensioner connectors (see page 23-19) and both seat belt buckle tensioner connectors (see page 23-19).

5. Remove the dashboard center lower cover (see page 20-65).

6. Pull down the carpet, then remove the Torx bolt (A) from the SRS unit.

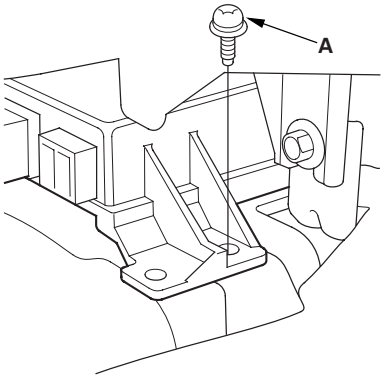

7. Disconnect the connectors A, B, and C and remove the two Torx bolts (D), then pull out the SRS unit.

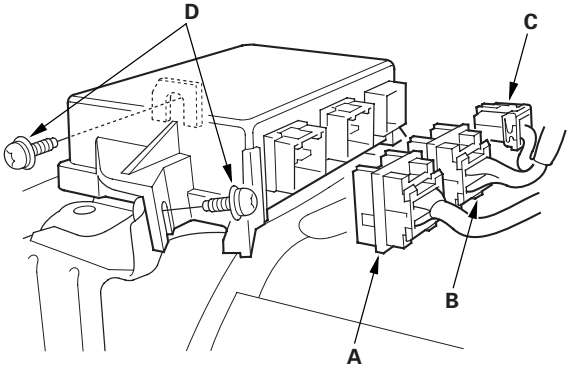

Installation

1. Install the new SRS unit (D) with Torx bolts (E), then connect the connectors A, B and C to the SRS unit; push them into position until they click.

   NOTE: When tightening the Torx bolts to the specified torque after replacement, be careful to turn them in so that their heads rest squarely on the brackets.

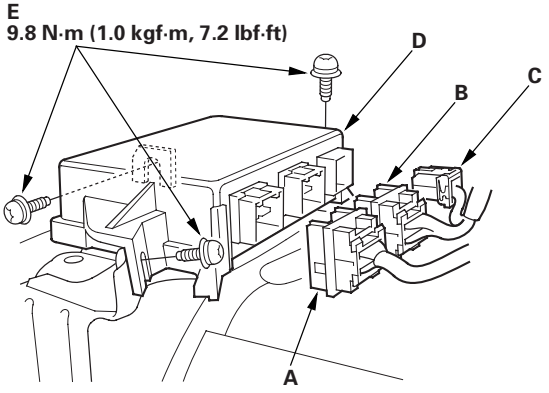

2. Reinstall the dashboard center lower cover (see page 20-65).

3. Reconnect the driver's and front passenger's airbag connectors (see page 23-18).

4. Reconnect the side airbag connectors (see page 23-18).

5. Reconnect both seat belt tensioner connectors (see page 23-19) and both seat belt buckle tensioner connectors (see page 23-19).

6. Reconnect the battery negative cable.

7. Initialize the OPDS unit (see page 23-24).

8. After installing the SRS unit, confirm proper system operation: Turn the ignition switch ON (II); the SRS indicator should come on for about 6 seconds and then go off.

Side Impact Sensor Replacement

Removal

1. Disconnect the battery negative cable, and wait at least 3 minutes before beginning work.
2. Disconnect the appropriate side airbag 2P connector.
3. Remove the seat assembly (see page 20-75).
4. Remove the rear side trim panel (see page 20-51).
5. Disconnect the floor wire harness 2P connector from the side impact sensor.
6. Remove the Torx bolt (A) using a Torx T30 bit, then remove the side impact sensor (B).

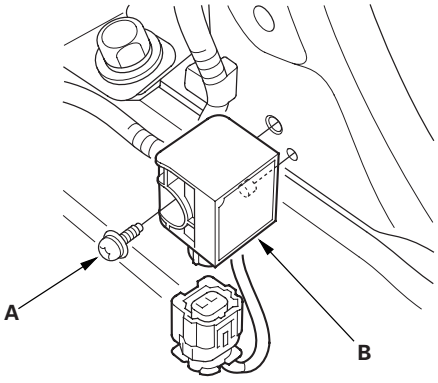

Installation

1. Install the new side impact sensor with a new Torx bolt (A) then connect the floor wire harness 2P connector (B) to the side impact sensor (C).

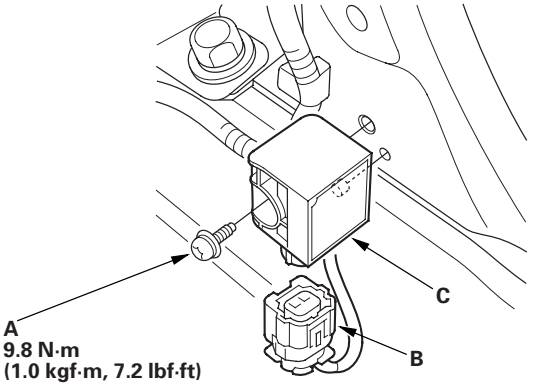

2. Reconnect the battery negative cable.
3. After installing the side impact sensor, confirm proper system operation: Turn the ignition switch ON (II); the SRS indicator should come on for about 6 seconds and then go off.
4. Install all removed parts.

OPDS Unit Replacement

NOTE: Review the front seat removal/installation procedure (see page 20-75) before performing repair or service.

Removal

1. Disconnect the battery negative cable, and wait at least 3 minutes before beginning work.

2. Disconnect the passenger's side airbag harness 2P connector (see step 4 on page 23-18).

3. Remove the passenger's seat assembly (see page 20-75) and seat-back cover (see page 20-79).

4. Remove the cover (A), then disconnect the OPDS unit harness 8P and sensor connectors from the OPDS unit.

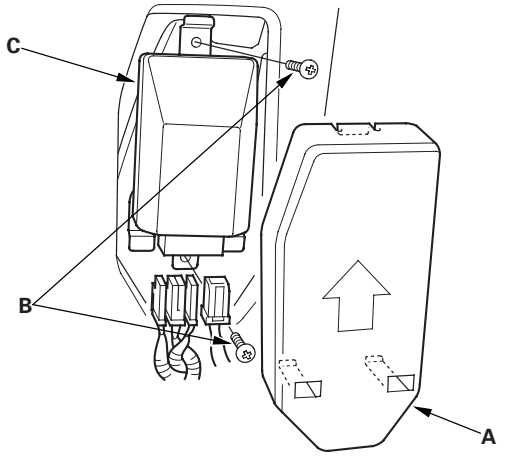

5. Remove the two screws (B) and OPDS unit (C).

Installation

1. Place the new OPDS unit on the seat-back frame. Tighten the two screws (A), and connect the OPDS unit harness 8P and sensor connectors to the OPDS unit. Reinstall the cover (B).

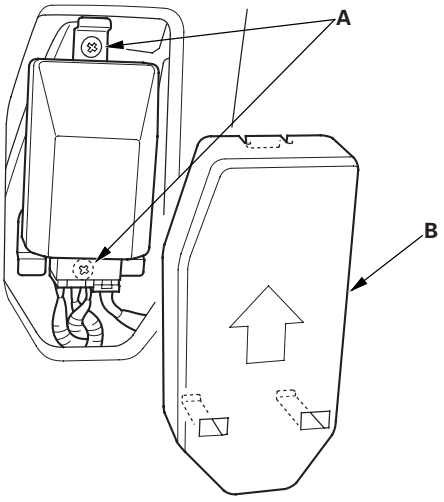

2. Install the seat-back cover (see page 20-79).

3. Install the seat assembly (see page 20-75), then connect the side airbag harness 2P connector.

4. Reconnect the battery negative cable.

5. Set the seat-back in the normal position, and make sure there is nothing sitting on the front passenger's seat.

6. Initialize the OPDS unit (see page 23-24).

7. After installing the OPDS unit, confirm proper system operation: Turn the ignition switch ON (II); the SRS indicator should come on for about 6 seconds and then go off.

Front Impact Sensor Replacement

Removal

1. Disconnect the battery negative cable, and wait at least 3 minutes before beginning work.

2. Remove the front inner fender (see page 20-111).

3. Disconnect the engine compartment wire harness 2P connector (A), and remove the two Torx bolts (B) using a Torx T30 bit, then remove the front impact sensor (C).

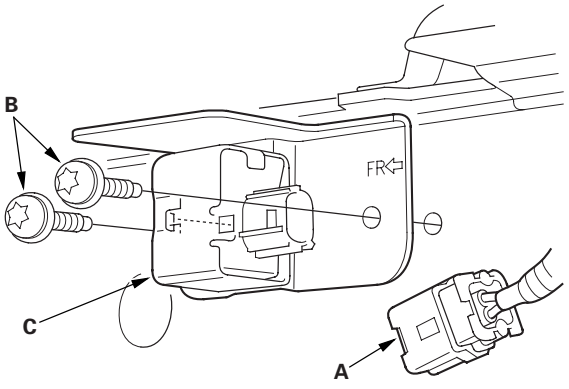

Installation

1. Install the new front impact sensor with new Torx bolts (A), then connect the engine compartment wire harness 2P connector (B) to the front impact sensor (C).

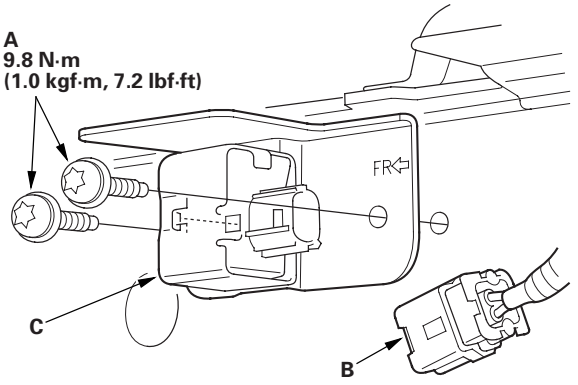

2. Reconnect the battery negative cable.

3. After installing the front impact sensor, confirm proper system operation: Turn the ignition switch ON (II); the SRS indicator should come on for about 6 seconds and then go off.

Service Manual Index

Main Index

NOTE: Refer to the following list to look up DTCs, symptoms, fuses, connectors, wire harnesses, specifications, maintenance schedules, and general service information:

DTC Troubleshooting Indexes
ABS-TCS Components 19-35
Automatic Climate Control 21-9
Automatic Transaxle 14-13
Fuel and Emissions 11-9
SRS 23-25

Symptom Troubleshooting Indexes
ABS-TCS Components 19-36
Automatic Climate Control 21-10
Automatic Transaxle 14-17
Charging System 4-30
Cruise Control System 4-60
Fan Controls 10-14
Fuel and Emissions 11-16, 18
Lubrication System 8-5
Moonroof/Sunroof 20-39
SRS 23-27
Starting System 4-4
Steering 17-4

Fuse/Relay Indexes
Power Distribution 22-56
Under-dash Fuse/Relay Box 22-55
Under-hood Fuse/Relay Box 22-54

Connector and Wire Harness Indexes
Component Connectors
(to harness) 22-12
Grounds (to components) 22-59
In-line Connectors (to harness) 22-11

Specifications section ..... Section 2

Maintenance section ..... Section 3

General Information section ..... Section 1

A

A/C
Test 21-66

A/C Compressor
Replacement 21-56

A/C Compressor Clutch
Inspection 21-57
Overhaul 21-58

A/C Compressor Clutch Circuit
Troubleshooting 21-36

A/C Compressor Relief Valve
Replacement 21-60

A/C Compressor Thermal Protector
Replacement 21-60

A/C Condenser
Replacement 21-61

A/C Condenser Fan Circuit
Troubleshooting 21-33

A/C Pressure Switch Circuit
Troubleshooting 21-38

A/C Signal Circuit
Troubleshooting 11-337, 338

A/F (Air Fuel Ratio) Sensor
Replacement 11-279

A/T Assembly
Removal 14-273
Installation 14-282

A/T Clutch End Plate
Inspection 14-379

A/T Clutch Pressure Control Solenoid Valves
Test 14-262, 264
Replacement 14-263, 265

A/T Clutch Waved-plate
Inspection 14-378

A/T Countershaft Assembly
Description 14-30, 32
Disassembly/Inspection/
Reassembly 14-359, 362

A/T Differential
Component Location Index 14-400

A/T Electronic Control System
Description 14-39

A/T Gear Position Indicator
Input Test 14-304, 305

A/T Gear Position Indicator System
Component Location Index 14-301
Circuit Diagram 14-302, 303

A/T Hydraulic Controls
Description 14-57, 61
Test 14-254

A/T Mainshaft Assembly
Disassembly/Inspection/
Reassembly 14-356

A/T Reverse Idler Gear
Removal/Installation 14-342

A/T Secondary Shaft Assembly
Disassembly/Inspection/
Reassembly 14-365

A/T Shift Cable
Replacement 14-297
Adjustment 14-299

A/T Shift Lever
Description 14-80
Removal 14-294
Installation 14-295
Disassembly/Reassembly 14-296

ABS Indicator Circuit
Troubleshooting 19-55, 56

ABS Modulator-control Unit
Removal/Installation 19-59

ABS-TCS Components
Component Location Index 19-30
How-to Information 19-31
Description 19-37
Circuit Diagram 19-44

Accessory Power Socket, Front
Test/Replacement 22-162

Accessory Power Sockets
Circuit Diagram 22-161

Air Cleaner
Removal/Installation 11-407

Air Cleaner Element
Inspection/Replacement 11-407

Air Mix Control Motor
Replacement 21-45
Test 21-45

Airbag, Driver's
Replacement 23-130
Repair 23-135

Airbag, Front Passenger's
Replacement 23-132

Alternator
Troubleshooting 4-39
Removal/Installation 4-46
Overhaul 4-48, 53

Alternator Control Circuit
Troubleshooting 4-40, 41

Alternator FR Signal Circuit
Troubleshooting 11-339, 341

ATF
Inspection 14-271
Replacement 14-272

ATF Cooler
Repair 14-291

ATF Cooler Lines and Hoses
Replacement 14-293

ATF Feed Pipes, End Cover
Replacement 14-336

ATF Pump
Inspection 14-348

ATF Temperature Sensor
Test/Replacement 14-268

Audio Unit
Description 22-114
Removal/Installation 22-118, 119

Audio/Entertainment
Component Location Index 22-110
Circuit Diagram 22-111, 113

Automatic Climate Control
Component Location Index 21-3
Description 21-11
Circuit Diagram 21-14

(cont'd)

Service Manual Index

(cont'd)

Automatic Transaxle
Description 14-28
Circuit Diagram 14-84, 86
Test 14-251

B

Back-up Light Switch
Test 13-4

Back-up Lights
Circuit Diagram 22-85

Ball Joint Boots
Replacement 18-16

Ball Joints
Removal 18-10

Battery
Test 22-61

Beverage Holder Light
Replacement 22-109

Blower Motor
Replacement 21-51

Blower Power Transistor
Test 21-48

Blower Unit
Removal/Installation 21-50

Brake Booster
Adjustment 19-16
Test 19-18
Replacement 19-19

Brake Calipers
Overhaul 19-14, 23

Brake Discs
Inspection 19-13, 22

Brake Fluid Level Switch
Test 19-10

Brake Lights
Circuit Diagram 22-84

Brake Lines and Hoses
Inspection 19-24
Replacement 19-25

Brake Master Cylinder
Replacement 19-15
Inspection 19-16

Brake Pads
Inspection/Replacement 19-11, 20

Brake Pedal
Adjustment 19-6

Brake Pedal Position Switch
Test 22-95

Brake Pedal Position Switch Signal Circuit
Troubleshooting 11-346, 347

Brake System Indicator Circuit
Circuit Diagram 19-9

Bulb, Headlight
Replacement 22-91

Bumper Lower Grille
Replacement 20-93

Bumper Side Cover
Replacement 20-94

Bumper Spoiler, Front
Replacement 20-92

Bumper, Front
Removal/Installation 20-90, 91

Bumper, Rear
Removal/Installation 20-95, 96

C

Cable Reel
Replacement 23-138

Camshaft
Inspection 6-40

Cargo Area Light
Test/Replacement 22-108

Carpet
Replacement 20-57

Catalytic Converter System
How-to Information 11-90

Ceiling Light
Test/Replacement 22-107

Center Console
Removal/Installation 20-59

Center Console Box
Replacement 20-61

Center Console Rear Cover
Replacement 20-62

Charging System
Component Location Index 4-29
Circuit Diagram 4-31
Troubleshooting 4-35, 37

Charging System Indicator Circuit
Troubleshooting 4-32, 33

Child Seat Tether Anchor
Removal/Installation 23-9

CKP (Crankshaft Position) Sensor
Replacement 11-280

CKP Pulse Plate
Replacement 6-27

Climate Control Power and Ground Circuits
Troubleshooting 21-32

Climate Control Unit
How-to Information 21-8
Removal/Installation 21-48

Climate Control Unit Bulb
Replacement 21-49

Clutch
Component Location Index 12-3
Description 12-4
Replacement 12-12

Clutch Interlock Switch
Test 4-8

Clutch Master Cylinder
Replacement 12-7

Clutch Pedal
Adjustment 12-6

Clutch Pedal Position Switch
Test 4-71

Clutch Slave Cylinder
Replacement 12-9

CMP (Camshaft Position) Sensor
Replacement
Fuel Injection System (PGM-FI) 11-281
VTC System 11-323

CMP Pulse Plate
Replacement 6-32, 33

Combination Light Switch
Test/Replacement 22-90

Connecting Rod Bearings
Replacement 7-8

Connecting Rod Bolts
Inspection 7-25

Connecting Rods
Inspection 7-5

Connectors
(See first page of this Index)

Control Shaft Bearing
Replacement 14-336

Control Shaft Oil Seal, End Cover
Replacement 14-335

Control Shaft Oil Seal, Torque Converter Housing
Replacement 14-355

Conventional Brake Components
Component Location Index 19-3
Test/Inspection 19-4
Troubleshooting 19-5
Repair 19-8

Coolant
Inspection 10-6
Replacement 10-6

Coolant Temperature Gauge
Troubleshooting 22-74

Cooling System
Component Location Index 10-2

Countershaft Bearing, Torque Converter Housing
Replacement 14-353

Countershaft Bearings
Replacement 13-65

Countershaft Reverse Selector Hub
Installation 14-361, 364
Removal 14-363

Countershaft 3rd Gear
Removal 14-360

Cowl Cover
Replacement 20-105

Crankshaft
Removal 7-13
Inspection 7-15
Installation 7-26

Crankshaft Main Bearings
Replacement 7-6

Crankshaft Oil Seal, Transmission End
Installation 7-32

Crankshaft Pulley
Removal/Installation 6-13

Cruise Control Actuator
Test 4-68
Replacement 4-69

Cruise Control Actuator Cable
Adjustment 4-71

Cruise Control Communication Line Circuit
Troubleshooting 4-63

Cruise Control Main Switch
Test/Replacement 4-67

Cruise Control Set/Resume/Cancel Switch
Test/Replacement 4-68

Cruise Control System
Component Location Index 4-59
Circuit Diagram 4-62

Cruise Control Unit
Input Test 4-64

Cylinder Head Assembly
Component Location Index 6-3
Inspection 6-6
Removal 6-31
Installation 6-51

Cylinder Head Cover
Removal 6-28
Installation 6-29

Cylinder Head, Bare
Inspection 6-34

D

Dampers, Front
Replacement 18-20

Dampers, Rear
Replacement 18-32

Dash Vents
Removal/Installation 20-68

Dashboard
Removal/Installation 20-69
Disassembly/Reassembly 20-71

Dashboard Center Lower Cover
Removal/Installation 20-65

Dashboard Center Panel
Removal/Installation 20-66

Dashboard Lower Cover
Removal/Installation 20-63, 67

Dashboard Under Cover
Removal/Installation 20-63

Differential Carrier Bearing Outer Races, A/T
Replacement 14-403

Differential Carrier Bearings, A/T
Replacement 14-401
Inspection 14-405

Differential Carrier Bearings, M/T
Replacement 13-85

Differential Carrier, A/T
Inspection 14-400
Replacement 14-401

Differential Oil Seals, A/T
Replacement 14-402

Differential Oil Seals, M/T
Replacement 13-86

Differential Pinion Gears, M/T
Inspection 13-84

DLC Circuit
Troubleshooting 11-273, 275

Door Glass
Replacement 20-10
Adjustment 20-13

Door Glass Weatherstrips
Replacement 20-12

Door Key Cylinder Switches
Test 22-205

Door Latches
Replacement 20-9

Door Lock Actuators
Test 22-172

Door Lock Knob Switches
Test 22-170

Door Lock Switches
Test 22-170

Door Outer Handles
Replacement 20-6

Door Panels
Removal/Installation 20-5

Door Sash Trim
Replacement 20-11

Door Seals
Replacement 20-13

Door Strikers
Adjustment 20-15

Door Weatherstrips
Replacement 20-12

Drive Belt
Inspection 4-43
Replacement 4-43

Drive Belt Auto-tensioner
Inspection 4-44
Replacement 4-45

Drive Plate
Removal/Installation 14-281

Driver's Switch Panel
Removal/Installation 20-64

DRL (Daytime Running Lights) Control Unit
Input Test 22-86

DTCs
(See first page of this Index)

Dust and Pollen Filter
Replacement 21-49

E

ECM
Replacement 11-284

ECT Sensor
Replacement 11-280

ECT Sensor Circuit
Troubleshooting 21-31

Emblems
Replacement 20-109

End Cover, A/T
Removal 14-331
Installation 14-394

Engine Assembly
Removal 5-2
Installation 5-11

(cont'd)

Service Manual Index

(cont'd)

Engine Block Assembly
Component Location Index 7-3

Engine Block, Bare
Inspection 7-16
Repair 7-18

Engine Mounts
Replacement 5-21

Entry Light Control System
Component Location Index 22-100
Circuit Diagram 22-101

EVAP Canister
Replacement 11-472

EVAP Canister Vent Shut Valve
Replacement 11-474

EVAP Control System
Component Location Index 11-420

EVAP Two-Way Valve
Test 11-468

Evaporator Core
Replacement 21-52

Evaporator Temperature Sensor
Replacement 21-44
Test 21-44

Exhaust Manifold
Removal/Installation 9-14

Exhaust Pipe
Replacement 9-15

F

Fan Controls
Component Location Index 10-13
Circuit Diagram 10-15

Fender Fairing, Front
Replacement 20-112

Final Driven Gear, M/T
Replacement 13-84

Flexible Joint Gasket
Replacement 9-16

Frame
Repair Chart 20-126

Frame Brace
Replacement 20-124

Front Doors
Component Location Index 20-3
Adjustment 20-14

Front Driveshaft Assembly
Component Location Index 16-3
Inspection 16-4
Removal 16-4
Disassembly 16-6
Resassembly 16-10
Installation 16-17

Front Impact Sensors
Replacement 23-144

Front Speakers
Replacement 22-120

Front Suspension
Component Location Index 18-3

Fuel and Emissions
Description 11-20

Fuel Fill Door
Adjustment 20-103

Fuel Fill Door Opener
Replacement 20-120

Fuel Fill Door Opener Cable
Replacement 20-117

Fuel Filter
Replacement 11-374

Fuel Gauge Sending Unit
Test 11-379

Fuel Injection System (PGM-FI)
Component Location Index 11-94

Fuel Lines and Hoses
Inspection 11-365
Removal 11-369
Installation 11-370

Fuel Pipe Protector
Replacement 20-113

Fuel Pressure Regulator
Replacement 11-373

Fuel Pump
Replacement 11-375, 376

Fuel Pump Circuit
Troubleshooting 11-353, 356

Fuel Supply System
Component Location Index 11-350
Adjustment 11-360
Test 11-363

Fuel Tank
Repair 11-364
Replacement 11-377, 378

Fuel Tank Pressure Sensor
Replacement 11-473

Fuel Tank Vapor Control Valve
Test 11-469
Replacement 11-471

Fuses
(See first page of this Index)

G

Gauge Assembly
Replacement 22-74

Gauges
Component Location Index 22-65
How-to Information 22-68
Circuit Diagram 22-70

General Information
(See section 1)

Glove Box
Removal/Installation 20-67

Glove Box Light
Test/Replacement 22-109

Grille Cover
Replacement 20-104

H

Hatch
Adjustment 20-100

Hatch Handle
Replacement 20-121

Hatch Latch
Replacement 20-122

Hatch Latch Switch
Test 22-108

Hatch Lock Actuator
Test 22-171

Hatch Lock Knob Switch
Test 22-204

Hatch Spoiler
Replacement 20-108

Hatch Support Struts
Replacement 20-101

Hatch Weatherstrip
Replacement 20-102

Hazard Warning Switch
Test 22-99

Headlight
Adjustment 22-88
Replacement 22-89

Headlights
Circuit Diagram 22-81, 82

Headliner
Removal/Installation 20-55

Heater Control Panel
Removal/Installation 20-64

Heater Unit
Replacement 21-53

Heater Valve Cable
Adjustment 21-55

High Mount Brake Light
Replacement 22-94

Hood
Adjustment 20-97

Hood Insulator
Replacement 20-99

Hood Latch
Replacement 20-119

Hood Opener Cable
Component Location Index 20-115
Replacement 20-116

Hood Seal
Replacement 20-98

Hood Switch
Test 22-204

Horn
Test/Replacement 22-133

Horn Switch
Test 22-134

Horns
Component Location Index 22-132
Circuit Diagram 22-133

HO2S, Secondary
Replacement 11-279

Hubs
Replacement 18-24

I

IAT (Intake Air Temperature) Sensor
Replacement 11-281

Idle Control System
Component Location Index 11-325
Inspection 11-348

Idle Gear
Replacement 14-372

Idle Gear Shaft
Removal/Installation 14-371

Idle Gear Shaft Bearing
Replacement 14-335

Ignition Coil Relay Circuit
Troubleshooting 4-26

Ignition Coil(s)
Removal/Installation 4-26

Ignition Key Light
Test 22-104

Ignition Key Switch
Test 22-104

Ignition Switch
Test 22-64

Ignition System
Component Location Index 4-22
Circuit Diagram 4-23, 24
Inspection 4-25

Immobilizer Control Unit-Receiver
Replacement 22-184

Immobilizer System
Component Location Index 22-175
Description 22-176
Circuit Diagram 22-177
Troubleshooting 22-178, 182, 183

IMT (Intake Manifold Tuning) Valve
Replacement 11-413

IMT (Intake Manifold Tuning) Valve Position Sensor
Replacement 11-413

In-car Temperature Sensor
Replacement 21-41
Test 21-41

Injectors
Replacement 11-277

Inner Fender Strakes
Replacement 20-113

Inner Fender, Front
Replacement 20-111

Inner Fender, Rear
Replacement 20-114

Inside Rearview Mirror
Replacement 20-18

Intake Air Bypass Control Thermal Valve
Test 11-405
Replacement 11-406

Intake Air System
Component Location Index 11-383

Intake Manifold
Removal/Installation 9-2, 8

Interlock System
Description 14-82
Component Location Index 14-310
Circuit Diagram 14-311, 312

Intermediate Shaft Assembly
Removal 16-19
Disassembly 16-20
Resassembly 16-22
Installation 16-24

Intput Shaft (Mainshaft) Speed Sensor
Replacement 14-266

K

Key Interlock Solenoid
Test 14-328

Key Interlock System Circuit
Troubleshooting 14-323, 325

Keyless Entry Transmitter
Test 22-173
Repair 22-174

Keyless Entry/Security Alarm System
Component Location Index 22-163, 196
Circuit Diagram 22-164, 198
Description 22-200

Keyless Receiver Unit
Input Test 22-169

Knock Sensor
Replacement 11-282

Knuckles
Replacement
Front Suspension 18-11
Rear Suspension 18-26

L

License Plate Light
Replacement 22-94

Lights, Exterior
Component Location Index 22-78

Lights, Interior
Component Location Index 22-105
Circuit Diagram 22-106

Low Fuel Indicator
Test 11-382

Lower Arms
Removal/Installation 18-19

Lubrication System
Component Location Index 8-3, 4
Test 8-7

Lumbar Support
Replacement 20-83

M

M/T Assembly
Removal 13-5
Installation 13-12
Disassembly 13-19
Resassembly 13-69

M/T Change Lever
Inspection 13-31
Disassembly/Reassembly 13-32
(cont'd)

Service Manual Index

(cont'd)

M/T Countershaft Assembly
Inspection 13-52, 55
Disassembly 13-54
Resassembly 13-56

M/T Differential
Component Location Index 13-82, 83
Adjustment 13-87

M/T Mainshaft Assembly
Inspection 13-37, 43
Disassembly 13-42
Resassembly 13-44
Adjustment 13-66

M/T Reverse Lockout System
Component Location Index 13-75
Description 13-76
Circuit Diagram 13-77
Troubleshooting 13-78

M/T Reverse Shift Fork
Inspection 13-30

M/T Shift Lever
Replacement 13-74

Main Valve Body
Removal 14-343
Repair 14-345
Installation 14-346, 387
Disassembly/Inspection/
Reassembly 14-347

Mainshaft Bearing, A/T Housing
Removal 14-340
Installation 14-341

Mainshaft Bearing, Torque Converter Housing
Replacement 14-352

Mainshaft Bearings
Replacement 13-64

Mainshaft 5th Gear
Inspection 14-357

Maintenance
(See section 3)

Maintenance Required Indicator
Repair 22-77

Map Light/Spotlight
Test/Replacement 22-107

MIL Circuit
Troubleshooting 11-248, 260

Mirrors
Component Location Index 20-16
Circuit Diagram 22-136

Mode Control Motor
Replacement 21-46
Test 21-46

Moonroof Cable Assembly
Replacement 20-45

Moonroof Frame
Replacement 20-43

Moonroof Glass
Adjustment 20-40
Replacement 20-40

Moonroof Motor
Replacement 20-42
Test 22-131

Moonroof Sunshade
Replacement 20-41

Moonroof Switch
Test/Replacement 22-131

Moonroof/Sunroof
Component Location Index ... 20-38, 22-129
Test 20-48
Circuit Diagram 22-130

MTF
Inspection/Replacement 13-4

Multiplex Control System
Component Location Index 22-185
Circuit Diagram 22-186
Description 22-188
Troubleshooting 22-189, 191

Multiplex Control Unit
Input Test
Entry Light Control System 22-102
Keyless Entry/Security Alarm System 22-166
Multiplex Control System 22-193
Wiper/Washer 22-154

N

Noise Reduction Condenser
Test 22-128

O

Oil Cooler
Replacement 8-10

Oil Filter
Replacement 8-9

Oil Filter Feed Pipe
Replacement 8-10

Oil Jet
Inspection 8-11

Oil Pan
Removal 7-11, 12
Installation 7-29, 30

Oil Pressure Switch
Replacement 8-6
Test 8-6

Oil Pump, Engine
Overhaul 8-12

Oil, Engine
Replacement 8-8

OPDS Unit
Replacement 23-143

Output Shaft (Countershaft) Speed Sensor
Replacement 11-283

Outside Air Temperature Sensor
Replacement 21-42
Test 21-42

Outside Mirror Holders
Replacement 20-18

Outside Power Mirror Actuators
Test 22-138
Replacement 22-139

Outside Power Mirror Switch
Test/Replacement 22-138

Outside Power Mirrors
Replacement 20-17
Component Location Index 22-135
Test 22-137

P

Park Lever Position Stop
Inspection/Adjustment 14-334

Park Pin Switch
Test 14-329
Replacement 14-330

Parking Brake
Inspection/Adjustment 19-7

Parking Brake Cable
Replacement 19-26

Parking Brake Switch
Test 19-10

PCV Valve
Inspection 11-419
Replacement 11-419

Piston Rings
Replacement 7-22

Pistons
Replacement 7-19
Installation 7-24

Power Relay
Test 22-62

Power Steering Fluid
Replacement 17-12

Power Steering Lines and Hoses
Replacement 17-13

Power Steering Pump
Test 17-9, 10
Replacement 17-14
Overhaul 17-15

Power Window Motor, Driver's
Test 22-147

Power Window Motors, Passenger's
Test 22-148

Power Window Switch, Master
Input Test 22-143
Test/Replacement 22-145
Repair 22-148

Power Window Switches, Passenger's
Test/Replacement 22-146

Power Windows
Component Location Index 22-141
Circuit Diagram 22-142

PSP (Power Steering Pressure) Switch Signal Circuit
Troubleshooting 11-342, 344

Q

Quarter Window Glass
Replacement 20-33

R

Radiator
Test 10-3
Replacement 10-12

Radiator and A/C Condenser Fans Common Circuit
Troubleshooting 21-35

Radiator Cap
Test 10-3

Radiator Fan Assembly
Test 10-4

Radiator Fan Circuit
Troubleshooting 10-16

Radiator Fan Switch
Replacement 10-19
Test 10-19

Radiator Fan Switch Circuit
Troubleshooting 10-18

Rear Air Outlet
Replacement 20-114

Rear Window Defogger
Component Location Index 22-125
Circuit Diagram 22-126

Rear Window Defogger Wires
Repair 22-127
Test 22-127

Rear Window Glass
Replacement 20-27

Recirculation Control Motor
Replacement 21-47
Test 21-47

Recirculation Control Motor Circuit
Troubleshooting 21-30

Refrigerant
Replacement 21-62, 63, 64
Test 21-65

Refrigerant Oil
Replacement 21-6

Regulator Valve Body
Disassembly/Inspection/ Reassembly 14-349

Reverse Lock System Circuit
Troubleshooting 14-321

Reverse Lockout Solenoid
Disassembly/Reassembly 13-80
Test 13-80

Rocker Arm Assembly
Removal 6-35
Disassembly/Reassembly 6-36
Installation 6-50

Rocker Arm Oil Control Solenoid
Inspection 11-323
Removal/Installation 11-324

Rocker Arm Oil Pressure Switch
Removal/Installation 11-324

Rocker Arms
Test 6-7, 8
Inspection 6-39

Roof Moldings
Replacement 20-106

S

Seat Belts
Component Location Index 23-3

Seat Belts, Front
Replacement 23-4
Inspection 23-8

Seat Belts, Rear
Replacement 23-6

Seat Cover, Front
Replacement 20-79

Seat Cushion Cover, Rear
Replacement 20-89

Seat Heater Elements
Test 22-208

Seat Heater Switches
Test/Replacement 22-208

Seat Heaters
Component Location Index 22-206
Circuit Diagram 22-207

Seat, Driver's
Removal/Installation 20-75
Disassembly/Reassembly 20-77

Seat, Front Passenger's
Disassembly/Reassembly 20-78

Seat, Rear
Removal/Installation 20-85

Seat-back Cover, Rear
Replacement 20-87

Seat-back Latch, Rear
Replacement 20-87

Seat-back Pivot Bracket, Rear
Replacement 20-86

Seat-back Striker, Rear
Replacement 20-86

Seats
Component Location Index 20-74

Secondary Shaft Bearing, Torque Converter Housing
Replacement 14-354

Secondary Shaft Bearings
Removal/Installation 14-366

Secondary Shaft 1st Gear
Inspection 14-369

Secondary Shaft 2nd Gear
Inspection 14-367

Security Control Unit
Input Test 22-201

Security Horn
Test 22-205

Servo Body
Disassembly/Inspection/ Reassembly 14-350

Shift Control Solenoid Valves
Test 14-258
Replacement 14-260
Installation 14-351

Shift Forks
Inspection 13-34
Disassembly/Reassembly 13-35

Shift Lock Solenoid
Test 14-328
Replacement 14-329

(cont'd)

Service Manual Index

(cont'd)

Shift Lock System Circuit
Troubleshooting 14-313, 317

Side Airbag, Driver's
Replacement 23-134

Side Impact Sensors
Replacement 23-142

Side Sill Panels
Replacement 20-107

Spark Plugs
Inspection 4-28

Specifications
(See section 2)

SRS
Component Location Index 23-10
Description 23-28
Circuit Diagram 23-30
Inspection/Replacement 23-129

SRS Indicator Circuit
Troubleshooting 23-123, 127

SRS Unit
Replacement 23-141

Stabilizer Bar
Replacement
Front Suspension 18-17
Rear Suspension 18-28

Stabilizer Links
Removal/Installation
Front Suspension 18-18
Rear Suspension 18-29

Starter
Test 4-9, 10
Removal/Installation 4-11
Overhaul 4-14, 15

Starter Solenoid
Test 4-8

Starting System
Component Location Index 4-3
Circuit Diagram 4-5
Troubleshooting 4-6

Steering
Component Location Index 17-3
Troubleshooting 17-6
Inspection 17-7, 11

Steering Column
Removal/Installation 17-25
Inspection 17-27
Inspection/Adjustment 17-28

Steering Gearbox
Removal 17-32
Overhaul 17-36
Installation 17-54

Steering Gearbox Mount Bushing
Replacement 17-59

Steering Linkage
Inspection 17-8

Steering Lock
Replacement 17-29

Steering Rack Guide
Adjustment 17-30

Steering Wheel
Inspection 17-7
Removal 17-22
Disassembly/Reassembly 17-23
Installation 17-24

Stereo Amplifier
Replacement 22-122

Subframes
Replacement 20-123

Sunlight Sensor
Replacement 21-43
Test 21-43

Suspension
Adjustment 18-4

Synchro Gear
Inspection 13-63

Synchro Sleeve
Inspection/Reassembly 13-62

T

Taillight
Replacement 22-93

Thermostat
Test 10-4
Replacement 10-8

Throttle Body
Repair 11-403
Test 11-403
Removal/Installation 11-410, 411
Disassembly/Reassembly 11-412

Throttle Cable
Adjustment 11-408
Removal/Installation 11-409

Tie-rod Ball Joint Boots
Replacement 17-58

Timing/Cam Chain
Removal 6-14
Installation 6-17
Inspection 6-25

Timing/Cam Chain Auto-tensioner
Removal/Installation 6-22

Timing/Cam Chain Case Oil Seal
Installation 6-24

Torque Converter
Description 14-76
Test 14-253

TP Sensor
Inspection 11-404

Trailing Arms
Removal/Installation 18-31

Transmission Gear Selection Switch
Replacement 14-270
Test 14-270

Transmission Housing
Removal 14-337
Installation 14-389

Transmission Range Switch
Test 14-306
Replacement 14-308

Trim
Component Location Index 20-49
Removal/Installation 20-50, 51, 52, 53, 54

Troubleshooting
(See first page of this Index)

Turn Signal/Hazard Relay
Input Test 22-98

Turn Signal/Hazard Warning Lights
Component Location Index 22-96
Circuit Diagram 22-97

U

Under-dash Fuse/Relay Box
Removal/Installation 22-60

Upper Arms
Removal/Installation 18-30

V

Valve Guides
Inspection 6-44
Replacement 6-45

Valve Seats
Repair 6-47

Valves
Adjustment 6-11
Removal 6-43
Inspection 6-44
Installation 6-49

Vehicle Speed Signal Circuit
Troubleshooting 22-75, 76

VSS
Replacement 22-77

VTC Actuator
Inspection 6-10
Removal/Installation 6-33

VTC Oil Control Solenoid Valve
Test/Removal/Installation 11-321

VTC System
Component Location Index 11-285

W

Washer Fluid Level Switch
Test 22-157

Washer Fluid Reservoir
Replacement 22-159

Washer Motor, Windshield
Test 22-157

Washer Tube, Windshield
Replacement 22-160

Water Outlet
Replacement 10-11

Water Passage
Replacement 10-9

Water Pump
Inspection 10-5
Replacement 10-5

Wheel Bearings
Inspection 18-8

Wheel Speed Sensors
Inspection 19-60
Replacement 19-60

Wheels and Tires
Inspection 18-9

Window Antenna Coil
Test 22-128

Window Antenna Wires
Repair 22-124
Test 22-124

Windows
Component Location Index 20-19

Windshield Glass
Replacement 20-21

Windshield Side Trim Retainers
Replacement 20-27

Wiper Motor, Windshield
Test 22-156
Replacement 22-158

Wiper/Washer
Component Location Index 22-149
Circuit Diagram 22-151, 152

Wiper/Washer Switch
Test/Replacement 22-153

Wire Harnesses
(See first page of this Index)

Wiring System
How-to Information 22-3
Relay and Control Unit
Locations 22-7, 8, 10

Woofer Amplifier
Replacement 22-123

1

1st/3rd Clutch Assembly
Disassembly 14-373
Inspection 14-377
Resassembly 14-382

2

2nd Clutch Transmission Fluid Pressure Switch
Replacement 14-267

3

3rd Clutch Transmission Fluid Pressure Switch
Replacement 14-267