Type | S/Section

RENAULT All Types

XXX

50

50 RECOMMENDED TOOL FOR REMOVING "FIR TREE" TYPE CLIPS

- Engine : XXX
- Gearbox : XXX

Basic Manual : XXX

This Technical Note gives details of the various applications of the clip removing tool.

"The repair methods given by the manufacturer in this document are based on the technical specifications current when it was prepared.

The methods may be modified as a result of changes by the manufacturer in the production of the various component units and accessories from which his vehicles are constructed".

All copyrights reserved by the Regie Nationale des Usines Renault.

Copying or translating, in part or in full, of this document or use of the service part reference numbering system is forbidden without the prior written authority of the Régie Nationale des Usines Renault S.A.

© **Régie Nationale des Usines Renault S.A. 1995**

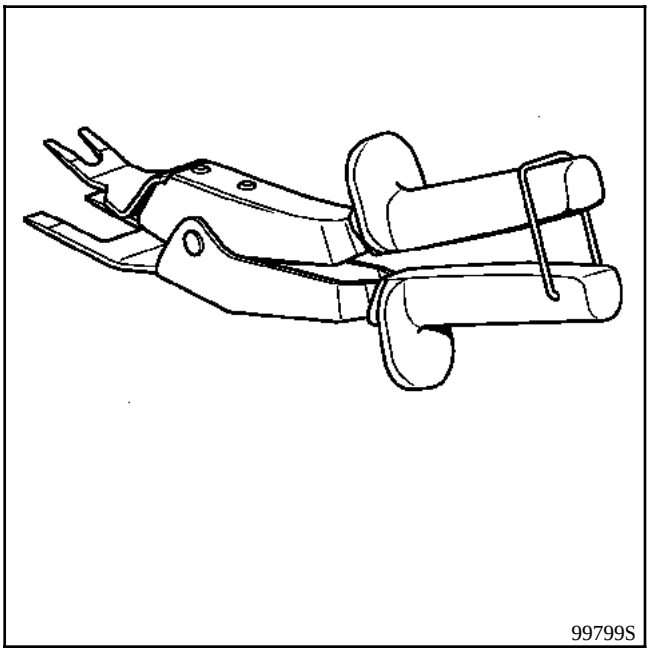

''Fir tree'' type clips and interior trim clips can easily be removed using the SODICAM pliers tool, Part No : 77 11 171 249.

Its flattened, bevelled end piece allows for easy access underneath the clips. This reduces damage to the head of the clip and therefore in the majority of cases the clips can be re-used when refitting.

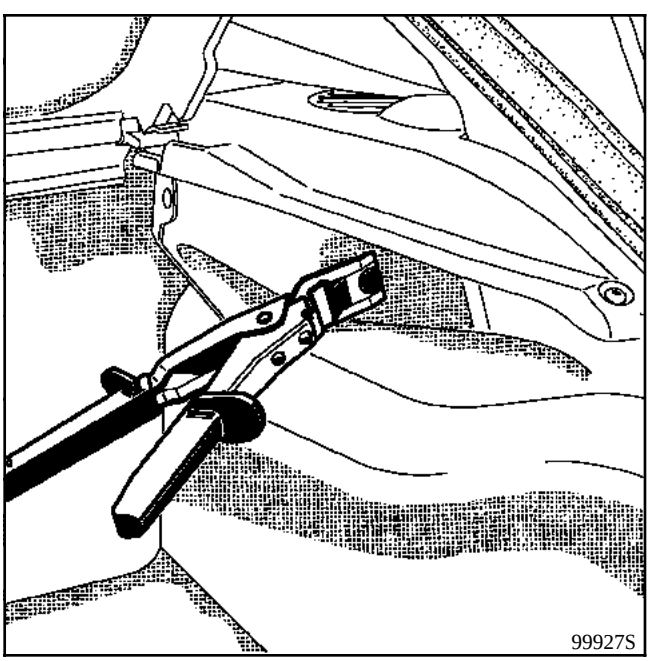

This tool can be used for removing carpet and vehicle soundproof fixing clips.

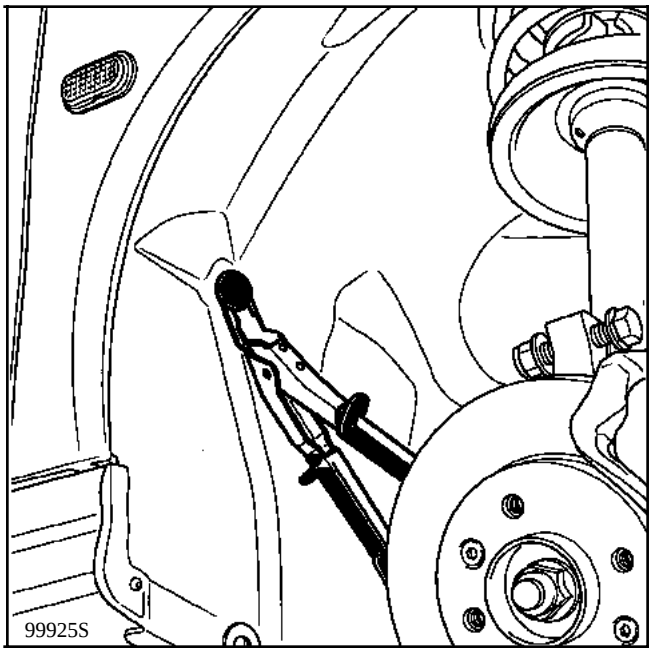

It can also be used for removing mudguard securing clips.

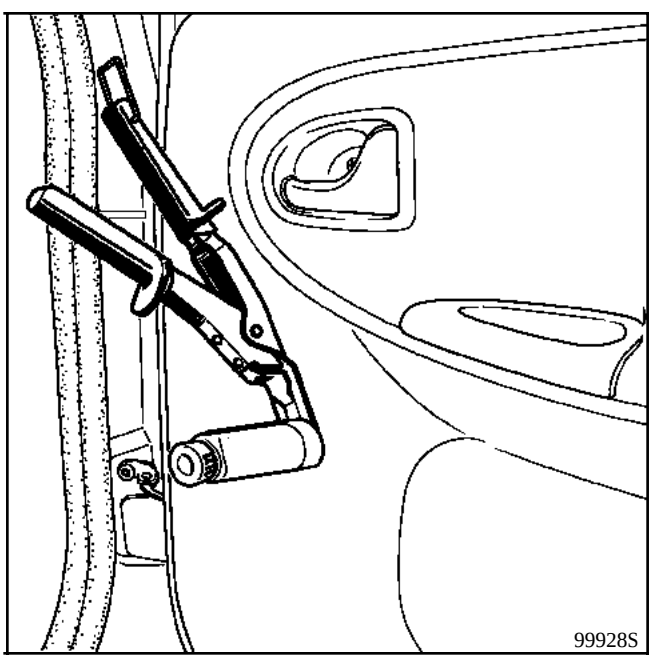

It ensures easy removal of door window winder handles .

NOTE : It is recommended that you place a piece of protective cloth between the trim and the fixed fork of the pliers so as not to damage the trim when removing the handle.

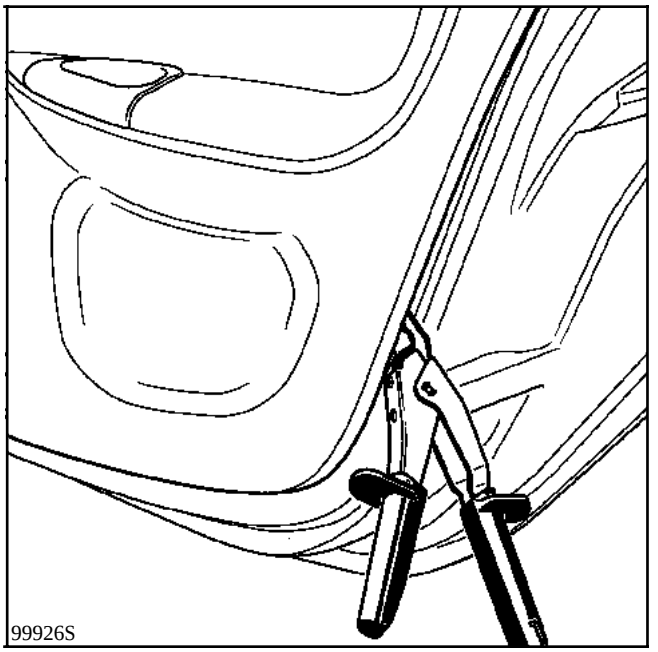

It can be used to unclip the door trim.

RENAULT All Types

XXX

94

94 SEALING OF JOINTS / BOOT LID HINGES AND SEALING FOR FRONT WING MOUNTINGS IN THE FRONT PILLAR.

Other sub-sections concerned : 48 42 47

- Engine : XXX
- Gearbox : XXX

Basic manual : XXX

This technical recommends the use of product to ensure the "**SEALING OF MOVING BODYWORK ASSEMBLIES (bodywork bolts, screws, etc...)**".

For good sealing it is essential to use **IXEL sealing mastic,** Part Number **77 11 170 230**.

© Régie Nationale des Usines Renault S.A. 1996

Imprimerie du Val Maubuée S.A.

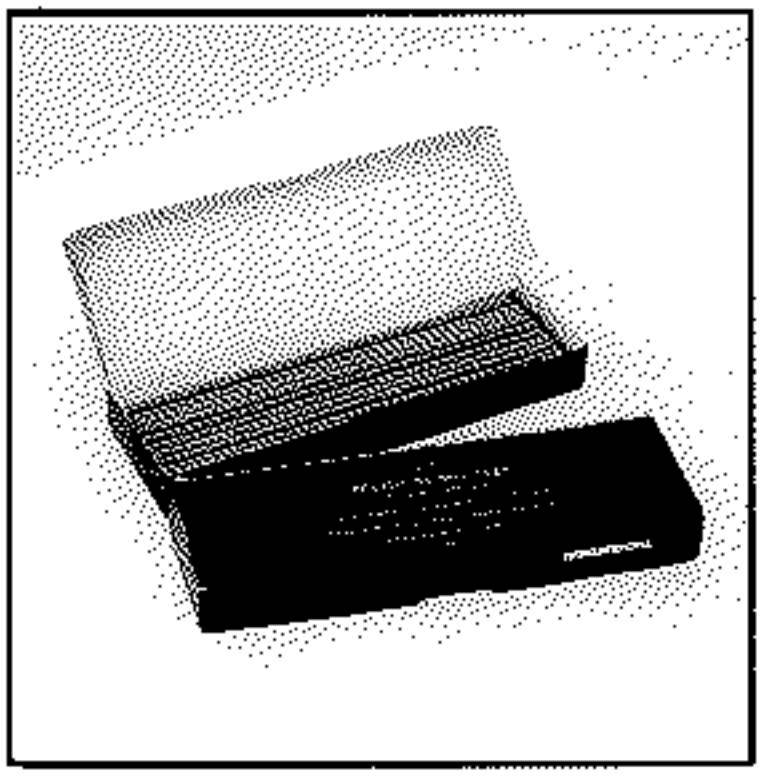

This malleable mastic is available in a pre-shaped roll, diameter **6mm, length 300mm** which is fitted around the mounting between the two elements to be assembled.

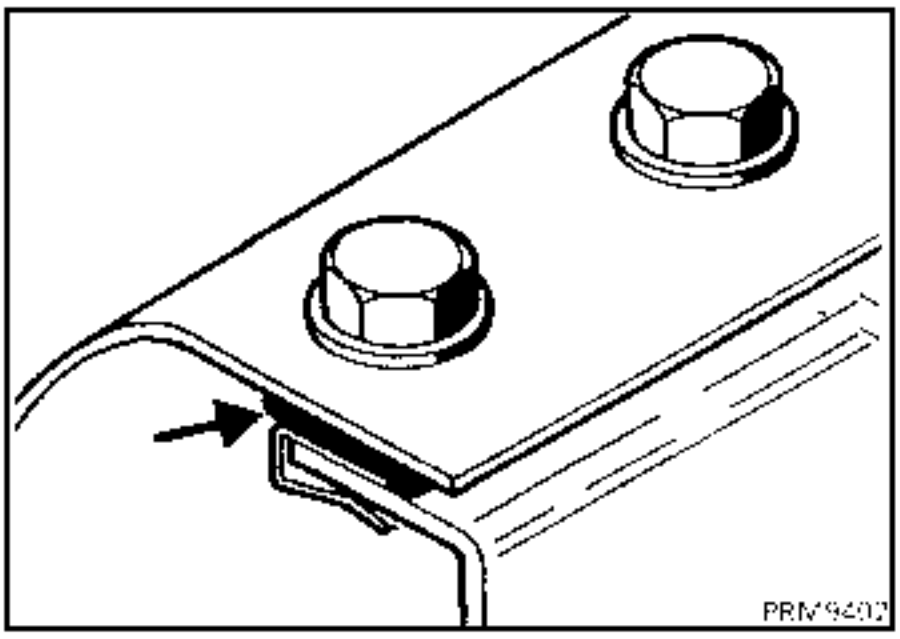

After applying pressure, this product guarantees sealing and protection.

NOTE : Before application of this product it is necessary to clean both contact faces using a surface cleaner

ASSEMBLIES CONCERNED

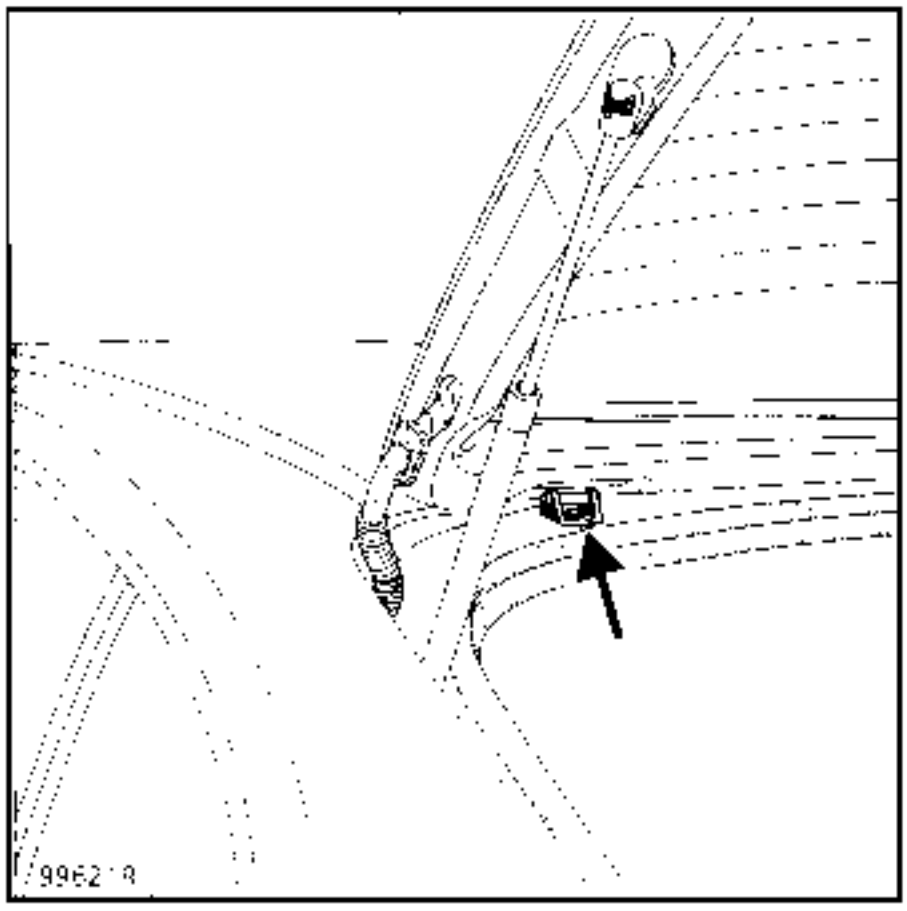

Sealing of hinges of the type fitted to the **B64 C06, J64** and **X57** to be applied whenever the tailgate is dismantled.

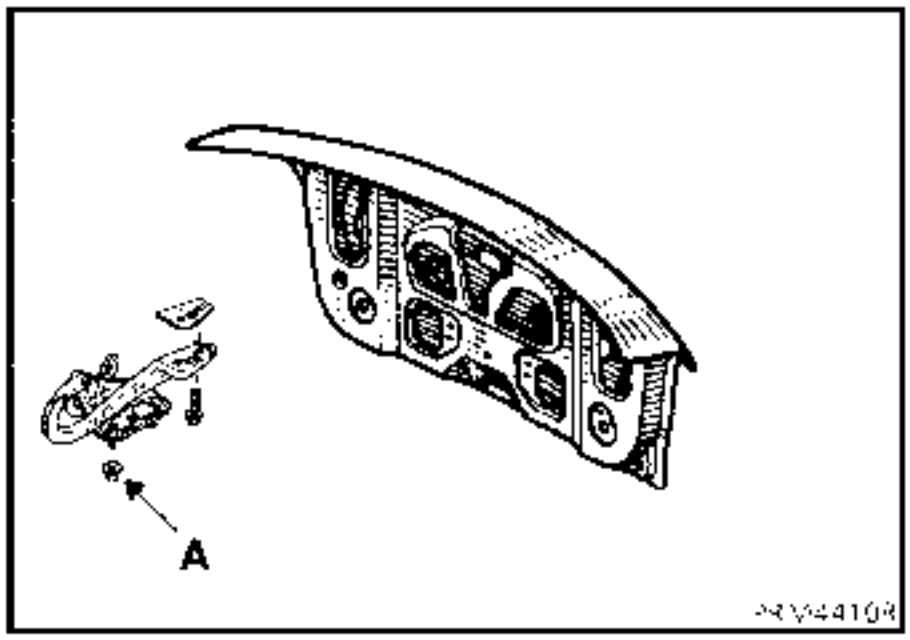

Sealing of the hinge joint mountings between plate (**A**) and the bodywork to be applied whenever the boot lid fitted to types **B54, B56, D64** and **L64** is removed

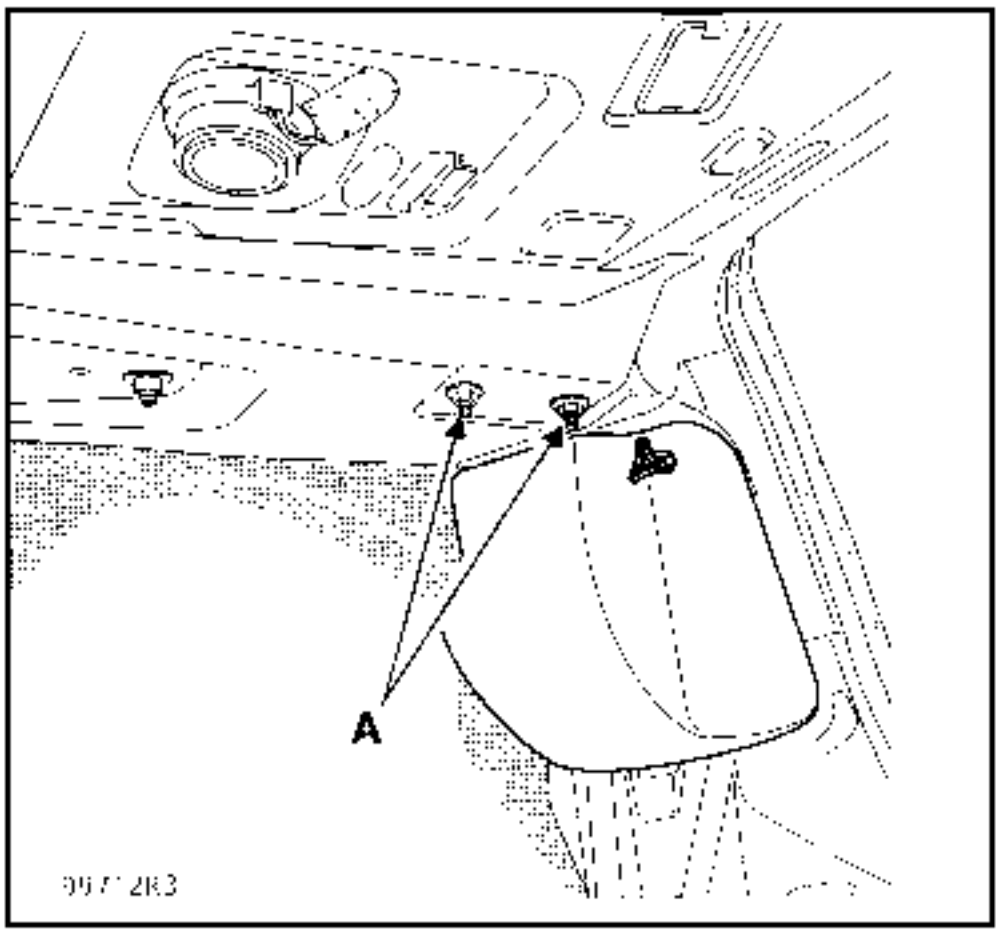

View of the two mountings (A) as per type fitted to the **D64** and **L64**

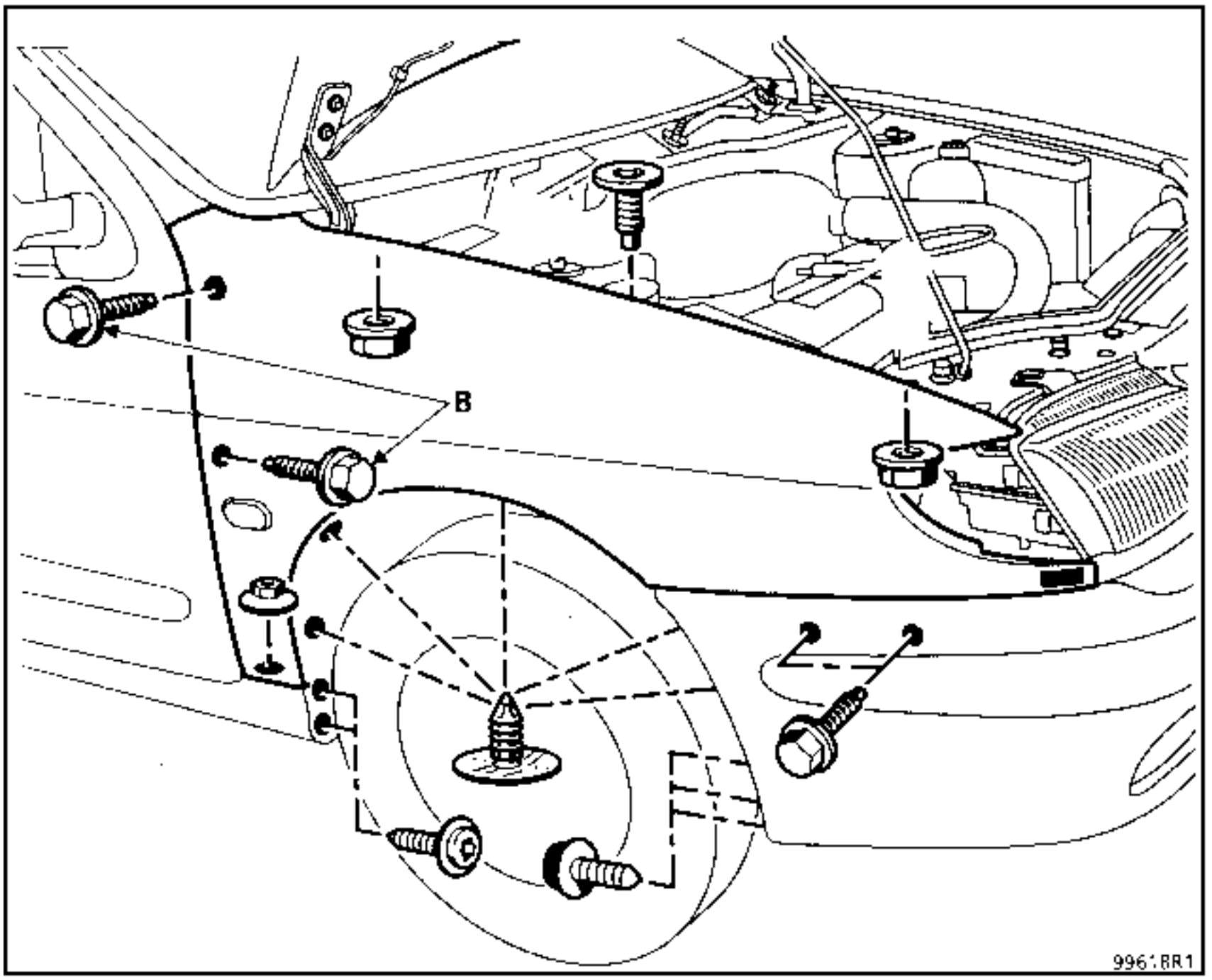

Sealing between the mounting plates/bolts (**B**) for the front wing and the front pillar for type **X64**.

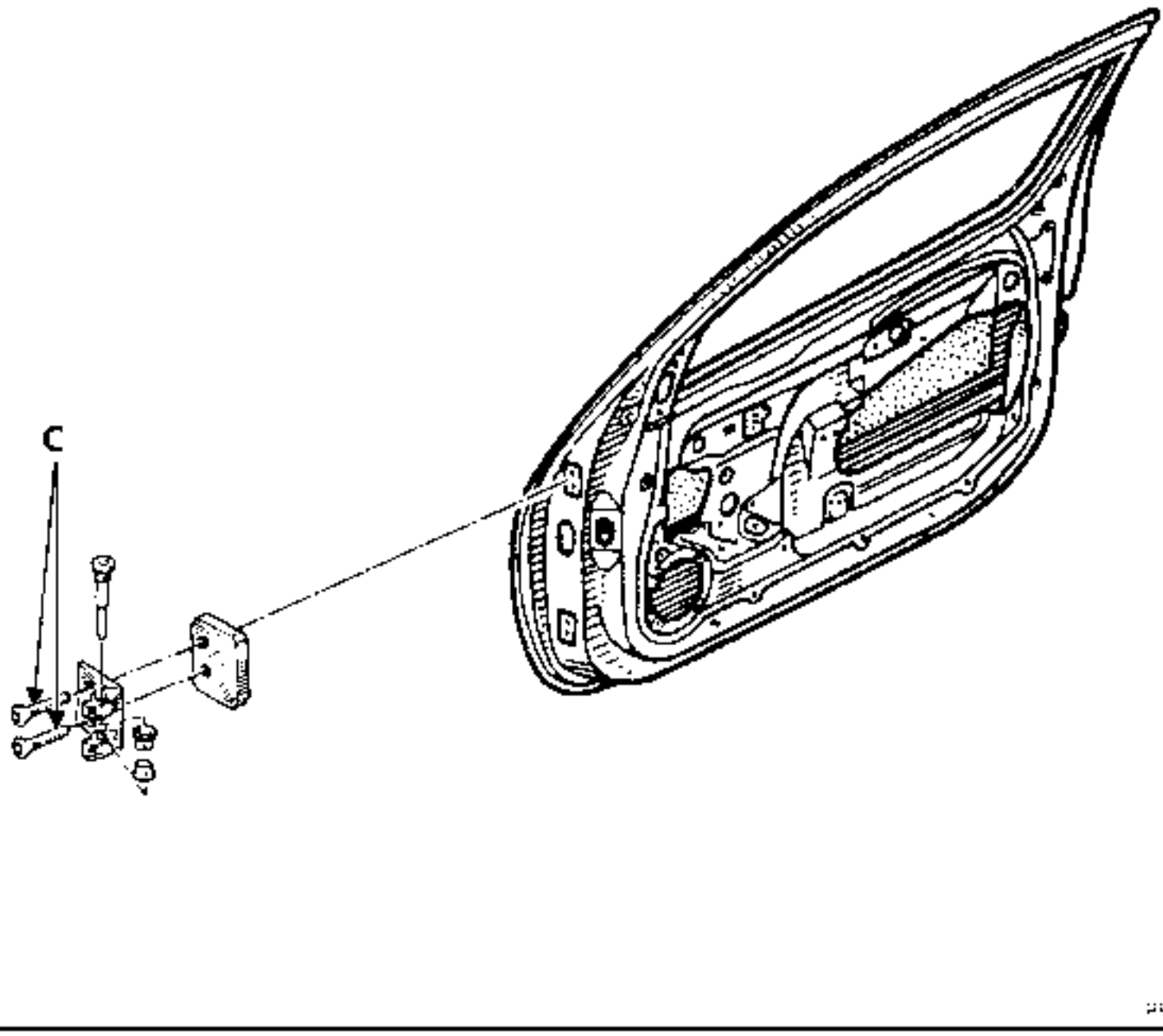

Sealing the door hinges fitted when replacing a door supplied by the Parts Department

Apply a bead of mastic between the plate and the bodywork around the two door hinge mounting bolts (C)

Reminder of the paint procedure for a replacement door :

- Painting of specific After Sales door hinges and door surrounds as per the After Sales paint procedure.
- Fit the door hinges together with an application of sealing mastic between the plate and the bodywork
- Fit the door to the vehicle and the door hingepins
- Adjust the door on the vehicle and lock the door hinge bolts (C).
- Following abrasion of the lacquer when adjusting the doors, paint around the door hinges and the heads of the bolts (C).
- Paint the door panel and its uprights with the door fitted in place as per the After Sales paint procedure

RENAULT
All Types

Type: XXX X

S/Section: 40

40 SOUNDPROOFING PADS FITTED TO THE BODYWORK LINING

When replacing a body supplied from the Parts Department it is essential to fit all the adhesive foam soundproofing pads on the pillar lining, the body sides, quarter panels, roof panel cross members, bulkhead, etc, before fitting the trim in the passenger compartment...

If this recommendation is not followed, this can cause aggravating noises in the vehicle passenger compartment.

The following products, available from the Parts Department, must be used :
Type of pad selected is up to the user.

- **Kit of pre-cut adhesive foam pads** — **Part No : 77 01 465 051**
- **Adhesive foam sheet to be cut as required** — **Part No : 77 01 040 765**

Use the old body as a reference point for the location and dimension of each foam pad.

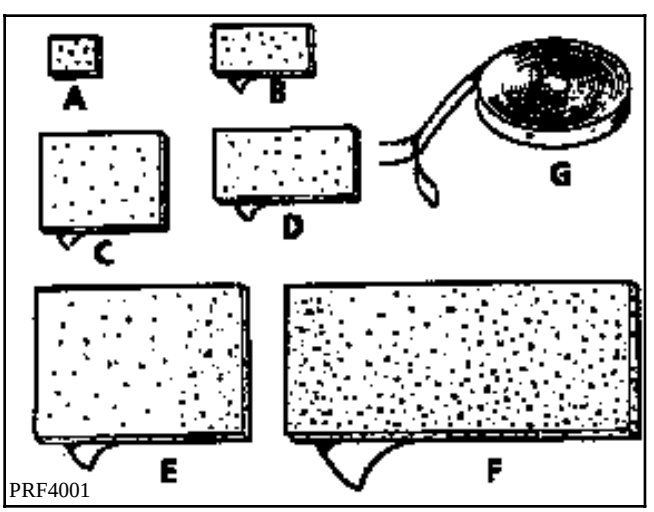

PRF4001

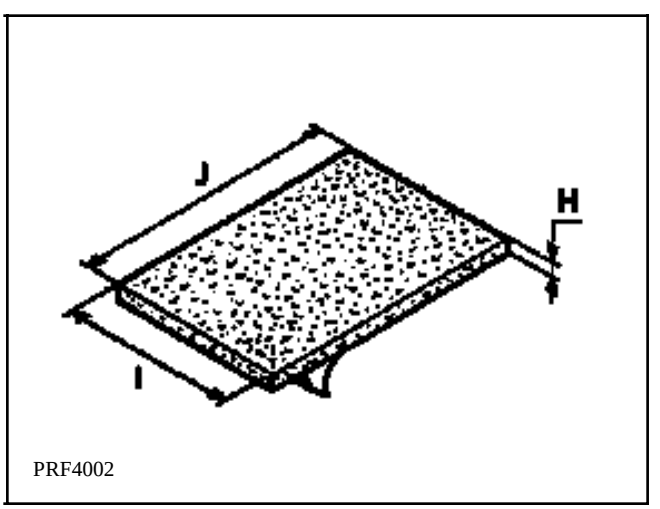

PRF4002

Kit of pre-cut adhesive foam pads

A 4 foam pads 20x10 mm
B 6 foam pads 50x20 mm
C 4 foam pads 60x50 mm
D 4 foam pads 70x35 mm
E 4 foam pads 120x80 mm
F 4 foam pads 200x80 mm
G 1 roll of foam (length 1 metre).

Sheet of adhesive soundproofing foam to be cut as required

H 3 mm
I 240 mm
J 580 mm

The repair methods given by the manufacturer in this document are based on the technical specifications current when it was prepared.

The methods may be modified as a result of changes by the manufacturer in the production of the various component units and accessories from which his vehicles are constructed".

All copyrights reserved by Renault S.A.

Copying or translating, in part or in full, of this document or use of the service part reference numbering system is forbidden without the prior written authority of the Régie Nationale des Usines Renault S.A.

© Renault 1997

All types

Type: XXX X

S/Section: 54

54 PRECAUTIONS TO BE OBSERVED WHEN USING TWO-POT BONDING MASTIC IN A BETAGUN APPLICATION GUN

- Engine : XXX
- Gearbox : XXX

Basic manual : XXX

BONDING MASTIC AND ACTIVATOR TWIN CARTRIDGE END SEALS

When bonding screeens using a two-pot bonding mastic product, to ensure effective bonding it is essential to take note of the following observation :

Twin cartridges from large two-pot kits (450 ml) and small kits (220 ml) have pre-cut metal cartridge end seals (1). These end seals automatically retract when the BETAGUN application gun is operated. When the two plunger arms are pushed in the cartridge end seals separate from the cartridges and the two products A and B are pushed to the end of the mixer nozzle (2).

The PU mastic and its activator are then effectively extruded and mixed.

The repair methods given by the manufacturer in this document are based on the technical specifications current when it was prepared.

The methods may be modified as a result of changes by the manufacturer in the production of the various component units and accessories from which his vehicles are constructed".

All copyrights reserved by Renault S.A.

Copying or translating, in part or in full, of this document or use of the service part reference numbering system is forbidden without the prior written authority of the Régie Nationale des Usines Renault S.A.

© Renault 1997

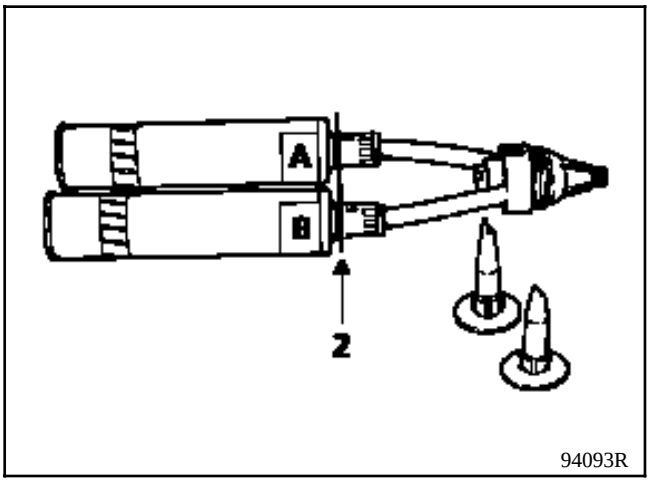

94093R

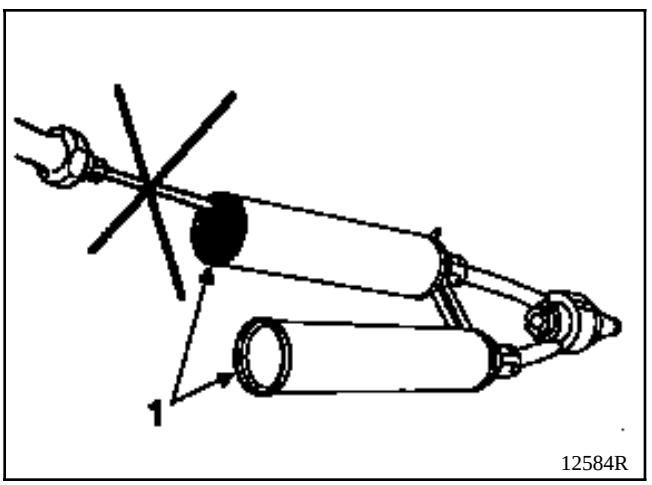

12584R

The cartridge end seals must not be removed before the cartridges are fitted into the application gun.

If the cartridge end seals are not in place, the application gun is acting directly on the plastic pistons and before activating the cartridges the pistons compress the bonding mastic and the activator.

As these products are of different densities, the two cartridges do not operate at the same time and mixture of the two products cannot be guaranteed.

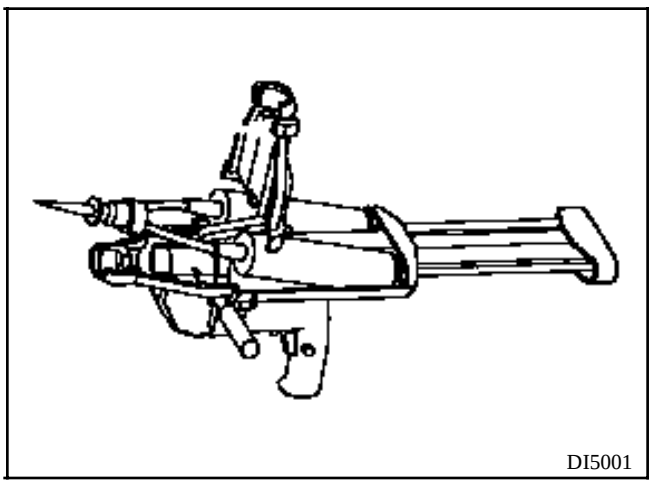
DI5001

All types

Type: XXX X

S/Section: 54

54 KIT OF REPLACEMENT PARTS FOR THE BETAGUN SPRAY GUN

- Engine : XXX
- Gearbox : XXX

Basic manual : XXX

INTRODUCTION

Following normal use of the **BETAGUN** spray gun, it is necessary to check the moving parts at the top of the spray gun for any signs of wear.

A kit of replacement parts is available from **SODICAM** under **Part Number 77 11 171 459.**

This technical note outlines the procedure for replacing worn parts of the spray gun nozzle.

FAULT-FINDING

When closing the cover (A) a metal fork moves and connects the spray gun drive bush to the mixer system (B) for the two twin cartridges.

The chafing caused by rotation of the drive bush causes the progressive destruction of the fork. Normal operating clearance is taking place between these two components.

This wear can be seen by :

- Opening the spray gun nozzle cap and sliding the drive bush to visualise the degree of fork wear. If the fork thickness has been considerably reduced (play ≥ 1 mm), replace these parts using the kit mentioned above.

- Fit the twin cartridges and close the spray gun nozzle cap.

  Look through the aperture in the cover (A) to see whether the drive bush drive pins are engaged in the mixer cartridges (B) along their entire length. If the pins are coming out or even half engaged, replace these parts using the kit mentioned above.

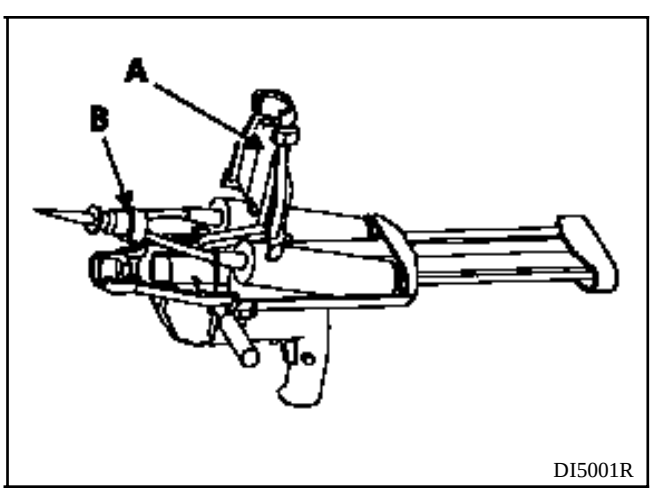

DI5001R

The repair methods given by the manufacturer in this document are based on the technical specifications current when it was prepared.

The methods may be modified as a result of changes by the manufacturer in the production of the various component units and accessories from which his vehicles are constructed".

All copyrights reserved by Renault.

Copying or translating, in part or in full, of this document or use of the service part reference numbering system is forbidden without the prior written authority of RENAULT.

© Renault 1997

REPLACEMENT PROCEDURE

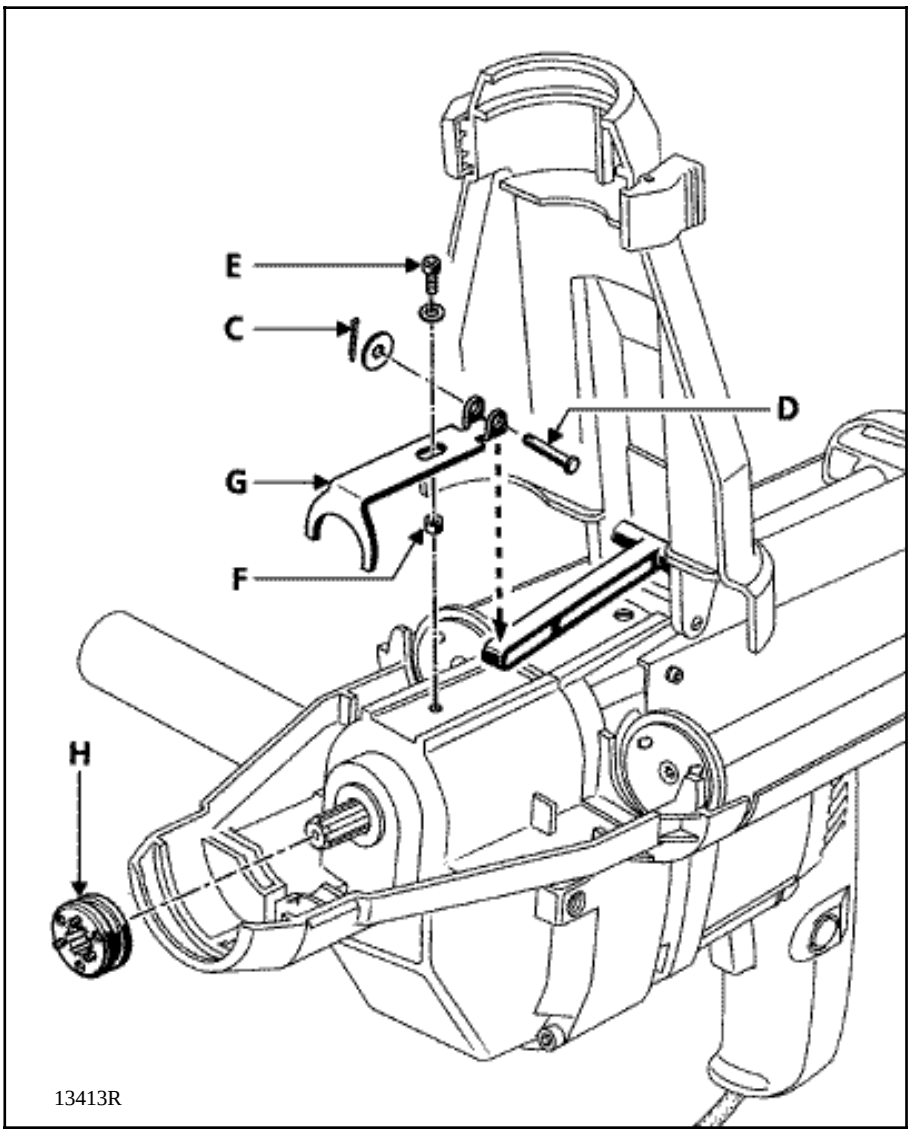

The replacement procedure is as follows :

- Pull out the locking pin (C) and pin (D).

- Remove:
  - the screw (E) and spacer (F),
  - the metal fork (G),
  - the drive bush (H) from the spray gun grooved shaft.

Refit the new parts contained in the replacement kit, by fitting in reverse order to removal.

Type S/Section

ALL TYPES

XXX X

59

59 SEAT BELTS DIFFICULT TO USE

- Engine : XXX
- Gearbox : XXX

Basic manual : M.R. Bodywork Section 5

INFORMATION

METHOD FOR ANALYSING CAUSES OF CUSTOMER DISSATISFACTION IN DAY-TO-DAY OPERATION

The purpose of this note is to reduce incidents where the seat belts are replaced for reasons which cannot be justified.

CUSTOMER COMPLAINT

- Difficult or impossible to move the inertia reel seat belt

CAUSE

- seat belt jamming - intermittent or permanent - or belt not rewinding correctly.

Front belt NITG code : **H511**

Rear belt NITG code : **H512**

Supplier code : As marked on component.

"The repair methods given by the manufacturer in this document are based on the technical specifications current when it was prepared.

The methods may be modified as a result of changes by the manufacturer in the production of the various component units and accessories from which his vehicles are constructed".

All copyrights reserved by Renault.

Copying or translating, in part or in full, of this document or use of the service part reference numbering system is forbidden without the prior written authority of RENAULT.

© RENAULT 1998

1. DESCRIPTION

An inertia reel seat belt consists of:

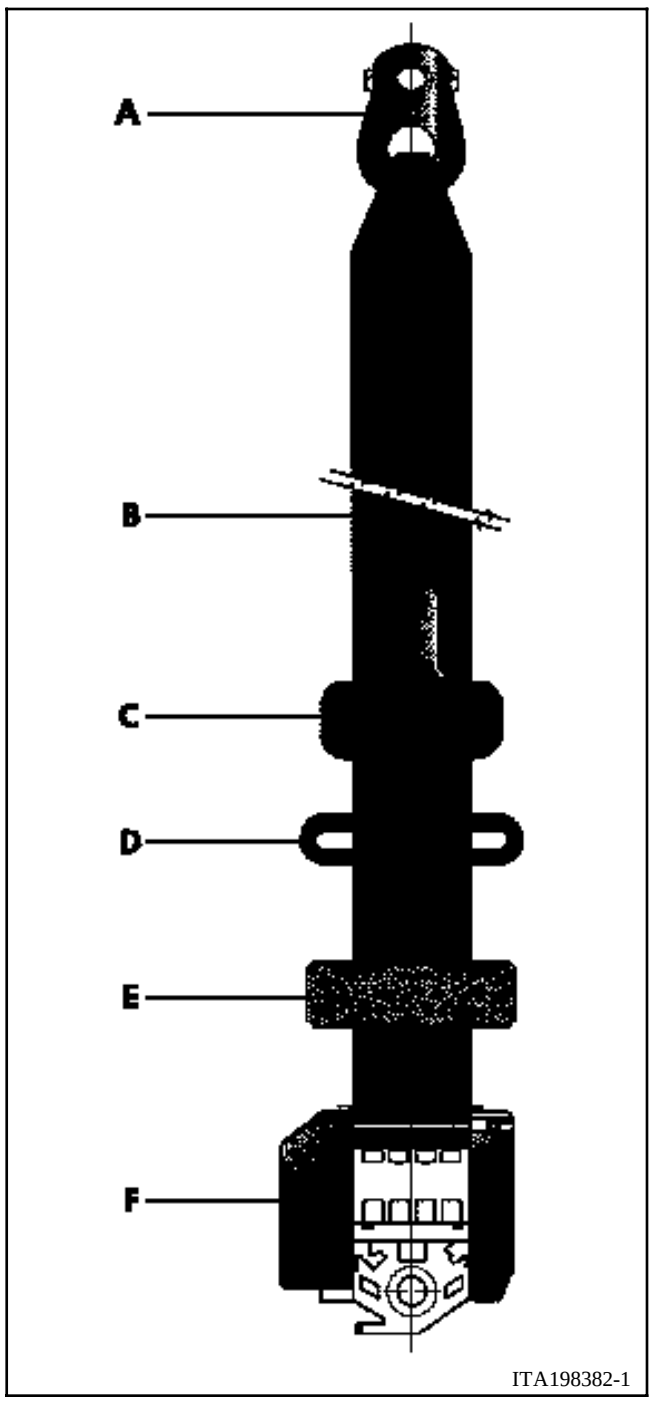

Fig. 1

A Lower fitting
B Belt
C Buckle
D Belt web guide
E Embellisher trim
F Retractor

2. OPERATION

Regulations (**ECE 16**) govern the operation of seat belts.

A spring is used to unwind and rewind the belt. Its setting is a compromise between how comfortable the belt is when it is worn (pressure of the belt on the thorax) and the efficiency with which it rewinds.

A seat belt jams in two different ways :

1. The speed with which the belt is unwound (called the sensitivity of the belt); example: the person wearing the belt pulls it energetically when fastening it.

   In this case, if the tolerated acceleration threshold is exceeded (**0.8** to **2** g) the inertia disc causes it to lock.

2. The acceleration / deceleration and the angular position of the vehicle (called vehicle sensitivity); example: braking, cornering, steep gradients, vehicle overturning, poor road surface.

   In this instance, the belt is locked via a ball bearing and lever, which cause the belt to lock through inertia.

Locked position **Unlocked position**

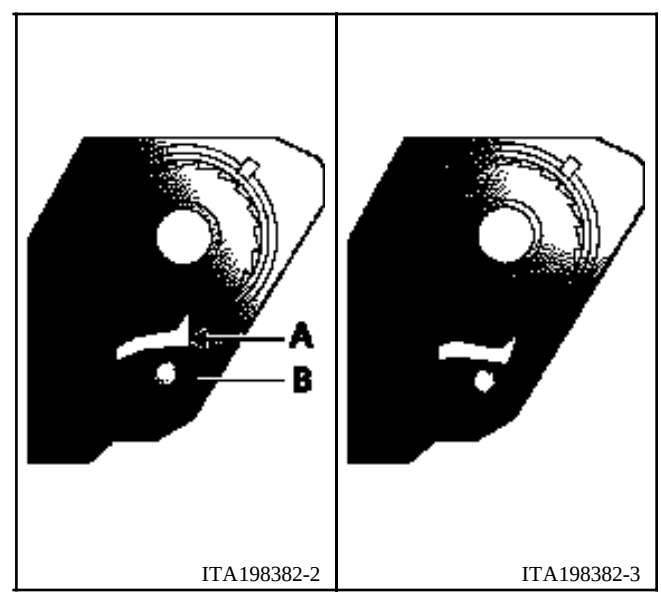

Fig. 2

A Locking lever
B Ball bearing

3. METHOD FOR ANALYSING CAUSES OF CUSTOMER DISSATISFACTION IN DAY-TO-DAY OPERATION

If operation is impeded in any way it may cause the belt to jam.

Intermittent jamming

The legal requirements relating to the belt may cause it to jam in certain situations.

It is important to make this clear to the user.

Some examples :

When the belt is fastened
If belt is unwound too quickly.
Vehicle at angle, two wheels on pavement.
Parked on a slope.

When driving
If belt is unwound too quickly.
Cornering.
Poor road surface (vibration).
Steep gradient.

The first check to make to ensure that the belt is operating correctly is **park the vehicle so that it is stationary on a level surface**.

This eliminates any jamming which may be caused by the ball bearing moving.

Unwind the belt slowly, without jerks.
Hold the buckle while the belt is rewound.

Continuous jamming

Possible causes of jamming:

If height adjustment mechanism has been lowered too quickly.
Rear seat backs locked in place too quickly.
Rough handling when belt was stowed away.

An attempt must be made to rewind the belt in order to release it. Below are various options, listed in order of priority:

Lower the height adjustment mechanism for the front seat belt slowly

Adjust the seat foam under the rear seat belt webbing.

If these two operations cannot be carried out or do not have any effect:

Pull the belt **slowly but firmly** to unwind just over an inch (approx. **3 cm**) (to adjust the belt on the retractor) and then allow the seat belt to rewind automatically.

The retractor should be released. Unwind the entire belt from the retractor and then rewind it, holding the buckle as it rewinds.

Repeat this operation if it fails :

Remove the lower anchorage or the upper guide in as far as this is possible and repeat the operations described below.

If the incident persists, it is advisable to remove the mouldings in order to check that the belt is properly routed and that the retractor is in the correct position (alignment, fasteners, trapped by surrounding fittings, deformation of the mounting point).

Incorrect rewinding

First of all, check with the customer the situations when the fault appears (permanent / intermittent / how often).

Factors which may have a bearing on when the fault occurs are the type and fabrics of the clothes worn by the user.

The first checking procedures before dismantling the assembly involve unwinding the entire belt to see what it looks like.

Examples :

Belt twisted.
Foreign bodies.
Wear and tear (cuts, spots, wear to fabric and belt edges).

Check that the belt guide pivots freely.

Check that the belt can move freely and is not impeded by the trim (position of mouldings).

Check that the embellishers around the belt mounting are properly fitted (clipped in place).

If the problem persists, remove the trim panels to check that the inertia reel is properly mounted (fasteners and alignment) and that no adjacent components impede its operation

Examples :

Wiring.
Sealing fitting.
Foam block.

Unwind the belt completely again.

This ensures that there is no risk that the belt will rewind incorrectly because of interference from adjacent components.

If after these various operations a fault is still present, go ahead and replace the seat belt.

NOTE : If the belt is touching the seat fabric it **will** require assistance by the customer to rewind it (see Recommendations point 4.4 below).

4. RECOMMENDATIONS

1 The belts must be kept clean and dry.

2 The belts should be operated when the vehicle is stationary and parked on level ground.

3 When unwinding, pull the belt slowly and without jerking it.

4 When rewinding the belt, advise the customer to hold the buckle as it rewinds.

5. CONCLUSION

This method of analysis only applies to day-to-day problems.

THIS PROCEDURE MUST BE FOLLOWED BEFORE THE SEAT BELT IS CHANGED.

RENAULT

Technical Note 487A

All types

Sub-sections concerned: 59A

Replacement of front seat belt

Recommendations to respect during the replacement of front seat belts.

This note cancels and replaces Technical Note 500A.

77 11 344 622 **Edition 2 - SEPTEMBER 2005** **EDITION ANGLAISE**

"The repair procedures given by the Manufacturer in this document are based on the technical specifications current when it was prepared.

The procedures may be modified as a result of changes introduced by the manufacturer in the production of the various component units and accessories from which his vehicles are constructed."

All rights reserved by RENAULT s.a.s.

Copying or translating, in part or in full, of this document or use of the service part reference numbering system is prohibited without the prior written authority of RENAULT s.a.s.

© Renault s.a.s. 2005

RECOMMENDATIONS FOR REPAIR OPERATIONS

During the replacement of a front seat belt, be sure to respect the fitting recommendations for new inertia reels described in this note.

Check the driver and passenger airbag equipment level in the vehicle before ordering inertia reels from the Parts Department (see inscription on the dashboard module and steering wheel (**1**)).

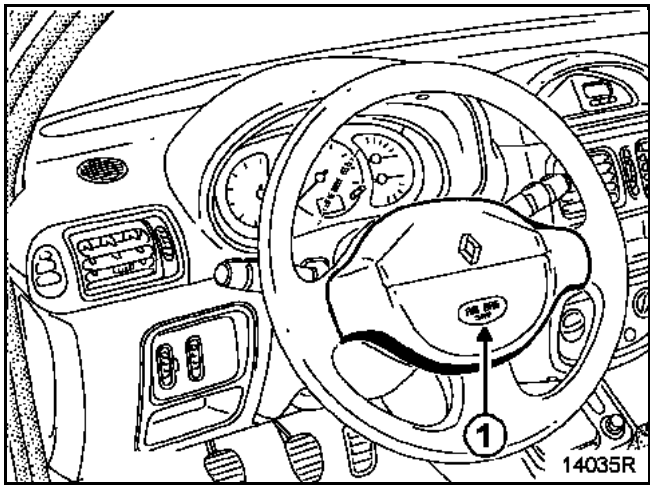

There are three cases:
– vehicle without airbag,
– vehicle with standard airbag, (previous generation),
– vehicle with PRS airbag.

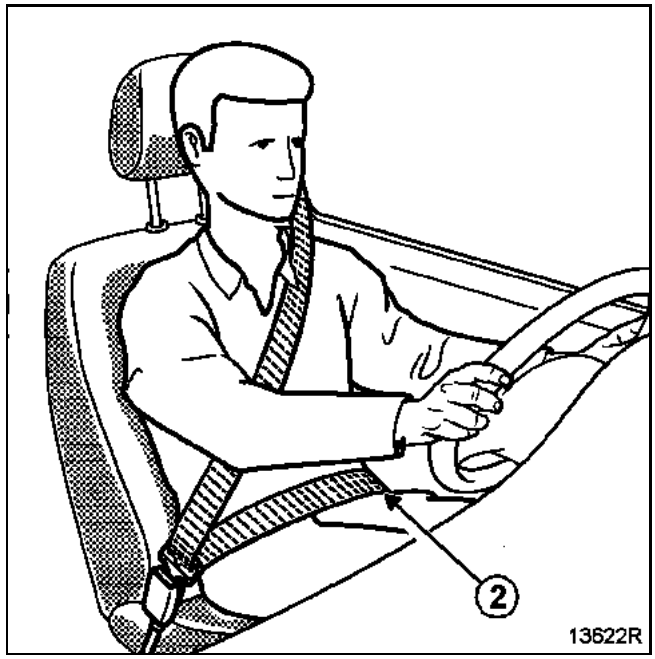

Having found out about the type of airbags fitted to the vehicle (if fitted to the vehicle), refer to the inscriptions sewn on the lower belt of the seat belt web (**2**).

Front seat belt: Recommendations for repair operations

Refer to the illustration below with recommended fitting information to check that the inertia reel is suited to the vehicle equipment.

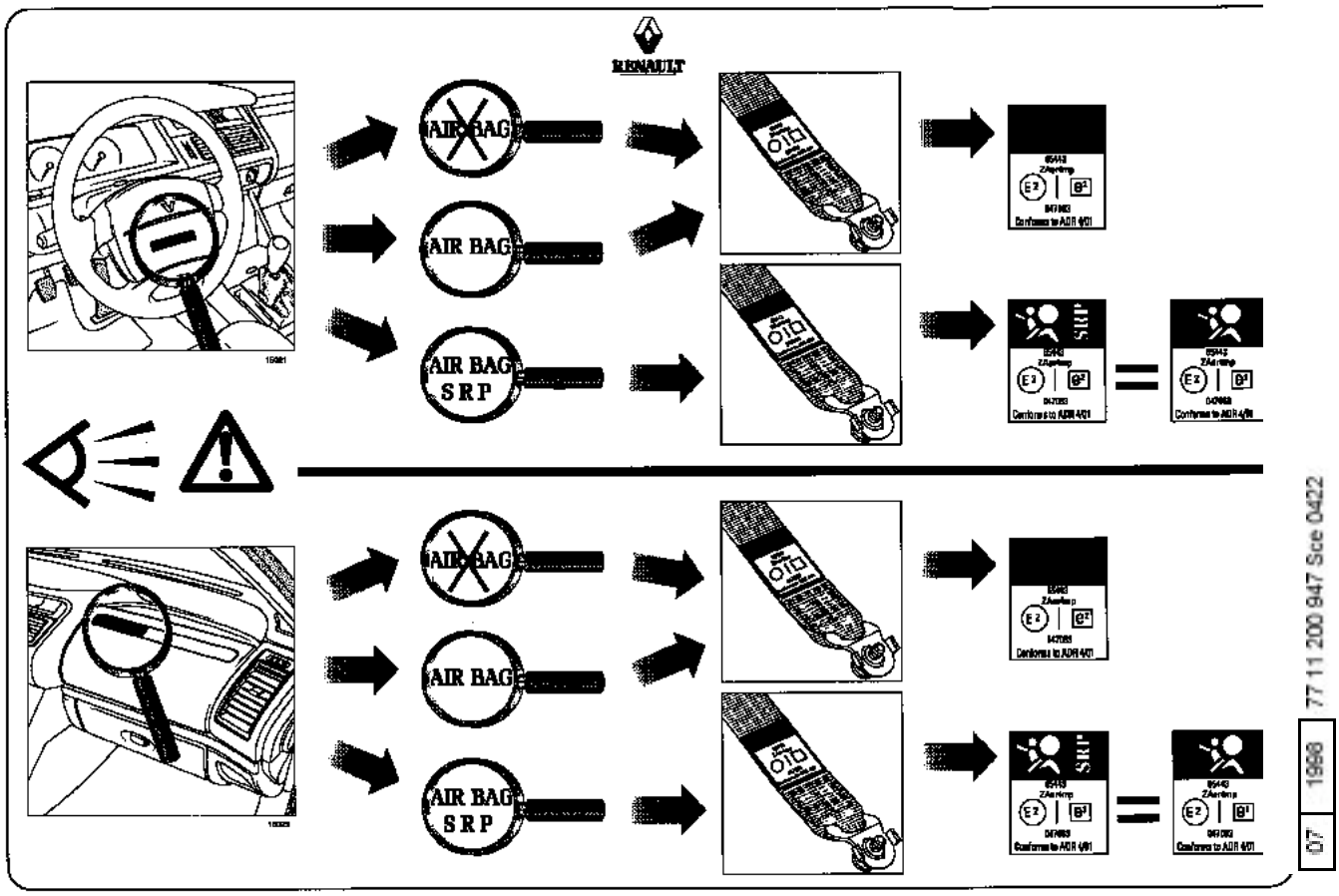

© RENAULT 1998

IMPORTANT
For safety reasons, do not fit a new inertia reel which is not suited to the vehicle equipment.

RENAULT

Technical Note 532A

Sub-sections concerned: 05B

Attached is a table of the vehicles affected

Special tooling for fitting crimped nuts and studs

Composition and use of tool Car. 1504 and its accessories Car. 1767 for fitting crimped nuts and studs.

77 11 338 802 **Edition 2 - JANUARY 2005** **EDITION ANGLAISE**

"The repair procedures given by the Manufacturer in this document are based on the technical specifications current when it was prepared.

The methods may be modified as a result of changes introduced by the manufacturer in the production of the various component units and accessories from which their vehicles are constructed."

RENAULT s.a.s. reserves all copyright

Copying or translating, in part or in full, of this document or use of the service part reference numbering system is prohibited without the prior written authority of RENAULT s.a.s.

© Renault s.a.s. 2005

Vehicle	*Type*	*MR*
Twingo	**X06X**	**306**
Renault 4		**176**
Renault 5	**X40X**	**258**
Extra	**F40X**	**258**
Kangoo	**XCXX**	**326**
Kangoo phase II	**XCXX**	**381**
Clio I	**X57X**	**296**
Clio II	**XBXX**	**338**
Clio II phase II	**XBXX**	**No**
Clio V6	**CB1A**	**349**
Clio V6 phase II	**CB1A**	**No**
Clio Internationale	**CB1R**	**359**
RENAULT 19	**X53X**	**294**
RENAULT 21	**X48X**	**292**
Modus	**XPXX**	**386**
Logan	**LS0X**	**389**
Mégane	**XAXX**	**313**
Mégane II	**XMXX**	**365**
Scénic	**JAXX**	**313**
Scénic II	**JM0X**	**371**
Laguna	**X56X**	**308**
Laguna II	**XGXX**	**340**
Renault 25	**X29X**	**250**
Safrane	**X54X**	**303**
Velsatis	**XJXX**	**354**
Avantime	**DE0X**	**351**
Espace	**J11X**	**272**
Espace II	**J63X**	**300**
Espace III	**JE0X**	**316**
Espace IV	**JK0X**	**362**
Trafic	**T/P/VXX**	**223**
Trafic II	**XL0X**	**343**
Master Rear-Wheel Drive	**XHXX**	**No**
Master Rear-Wheel Drive Phase II	**XHXX**	**No**
Master		**225**
Master II	**XDXX**	**324**
Master II Phase II	**XDXX**	**378**
Spider	**EF0H**	**320**

COMPOSITION OF TOOL Car. 1504 WITH ITS ACCESSORIES Car. 1767

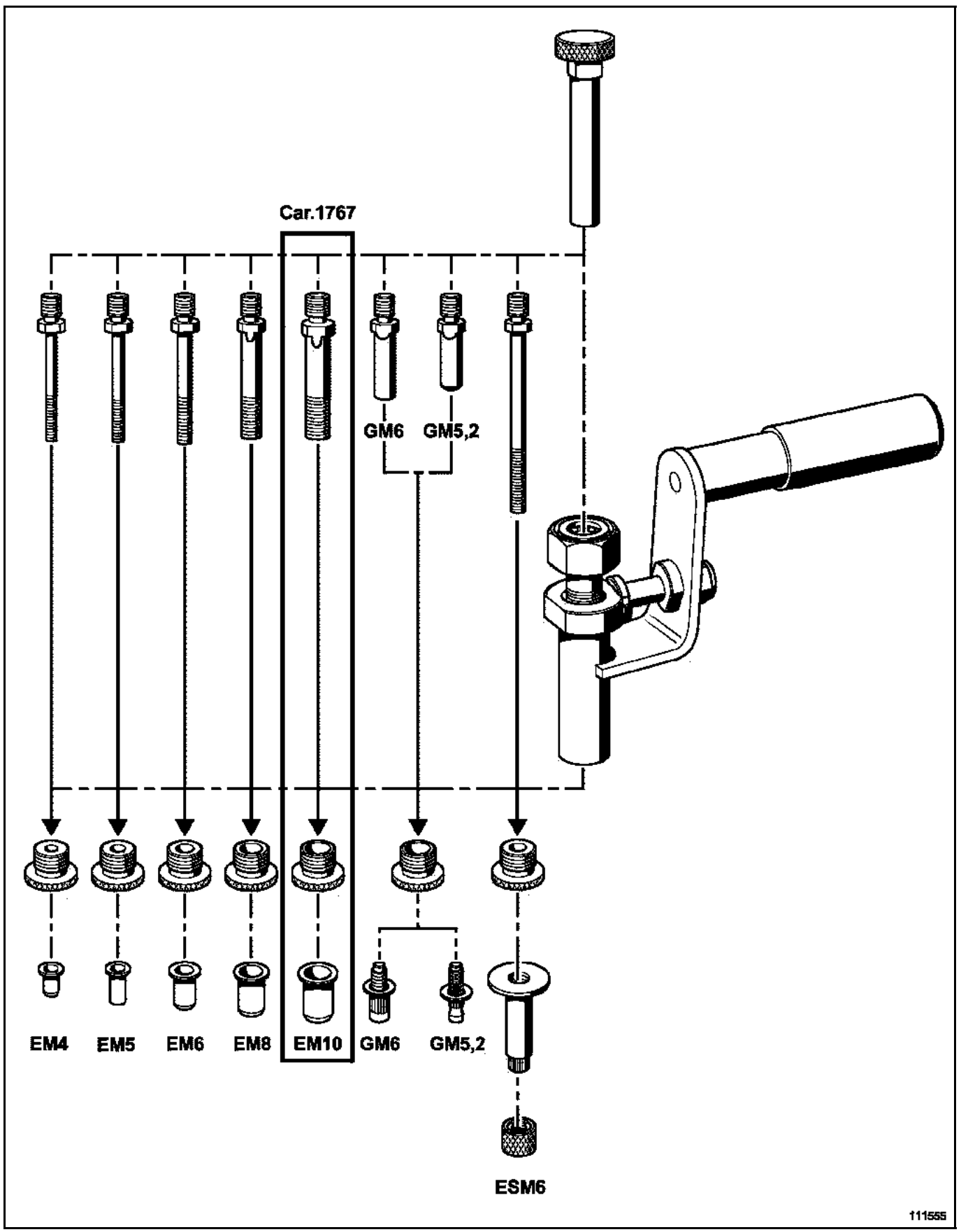

DESCRIPTION

Tool **Car. 1504** with its accessories **Car. 1767** is used for fitting the following inserts:

NAME	DESCRIPTION	PART NUMBER
Nuts	EM4 EM5 EM6 EM8 EM10	77 01 047 924 77 01 062 332 77 03 043 020 77 01 047 925 77 03 043 095
Studs: "non-standard" "non-coated"	 GM6 GM5.2	 77 01 047 926 77 01 047 927
Special nut	ESM6	77 03 043 083

Note:
Tool **Car. 1504** is available from the Parts Department (Part number: **00 00 150 400**)
To supplement the scope of the tool, order accessories kit **Car. 1767** for crimping nut EM10, comprising the matching mandrel and anvil.
(Part number: **77 11 381 767**).

Refer to **05A, Bodywork equipment and tools, special bodywork tooling: Use** below for the use of tool Car. 1504.

PREPARATION OF TOOL Car. 1504

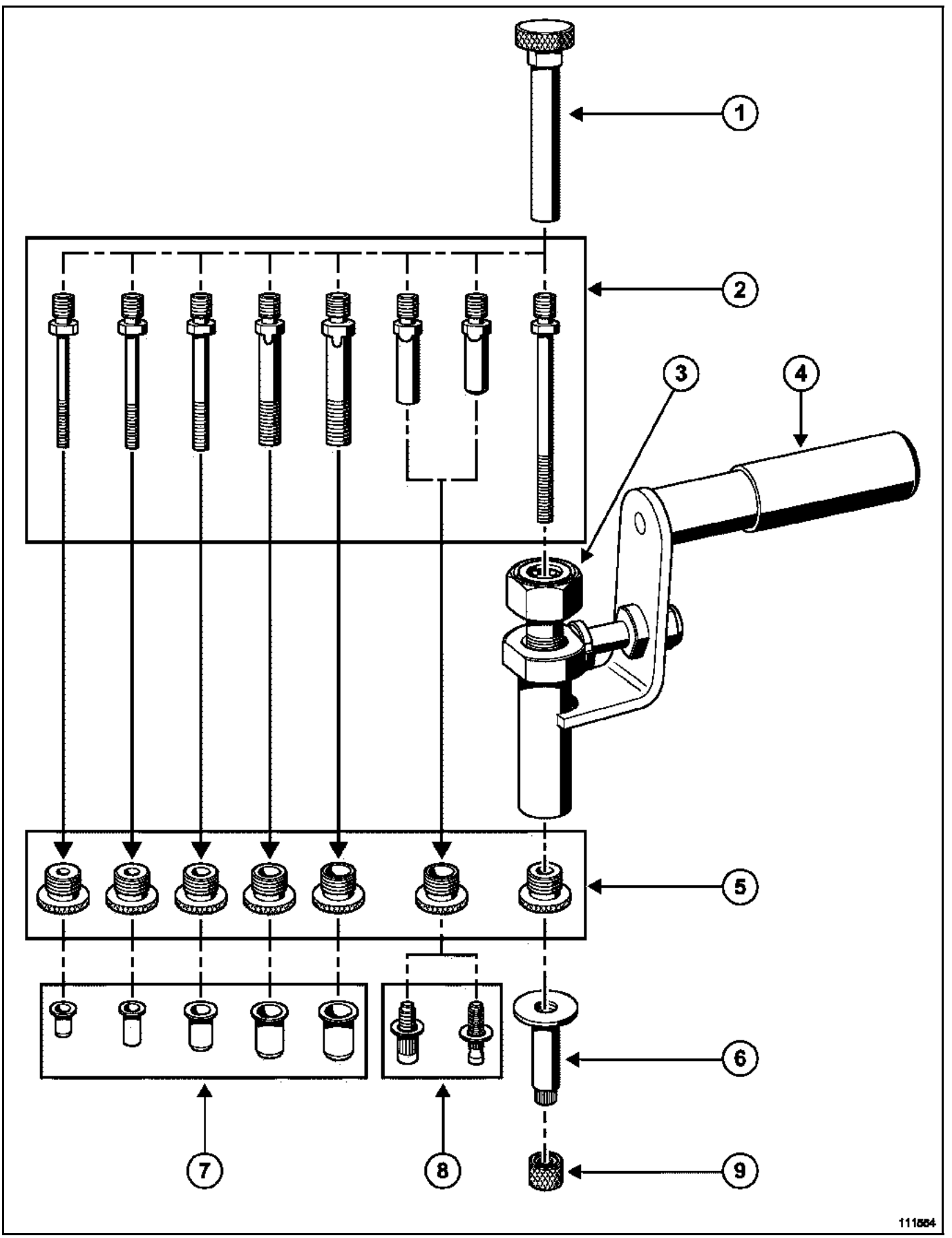

1 Mandrel support
2 Mandrels
3 Tightening nut
4 Body
5 Anvils
6 Special nut
7 Nuts
8 Studs
9 Thrust nut

- Select the assembly (mandrel, anvil and insert) appropriate for the fixing to be crimped.
- Screw mandrel (**2**) into mandrel support (**1**) (left-hand thread).
- Tighten bolt (**3**) fully against the body (**4**) (left-hand thread).
- Screw anvil (**5**) into the body (**4**) (left-hand thread).
- Insert the assembly (**1**) and (**2**) into the body of the tool.
- Screw the insert (right-hand thread) on to the pulling rod.

Note:
To fit the special nut (**6**), the mandrel passes through the crimping nut and is screwed to the thrust nut (**9**).

IMPORTANT
Each time a panel is stripped in the workshop (e.g. when drilling), degrease and wipe the area and then use a fine paintbrush to carry out the following anti-corrosion protection procedure:
– a pre-treatment primer,
– a two-part primer
– paint in the vehicle body colour.

USE OF TOOL Car. 1504

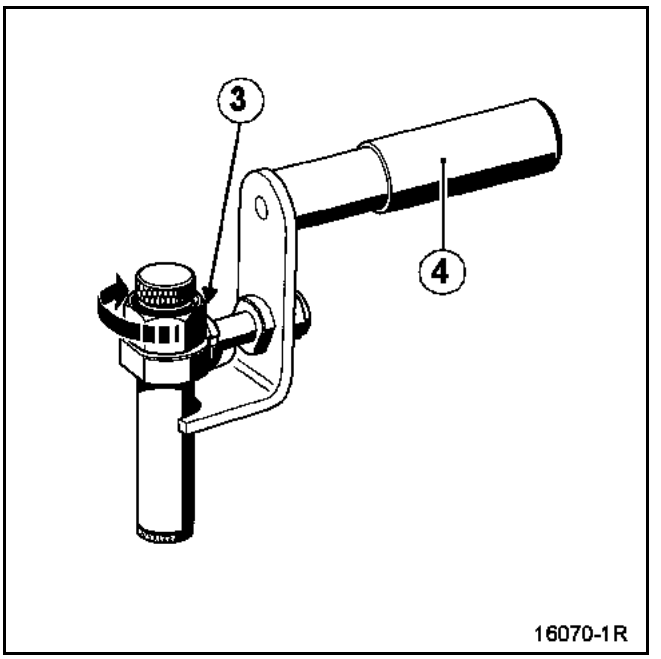

Turn screw (**3**) using a **24** spanner holding the tool handle (**4**) by hand.

IMPORTANT
Completion of the crimping operation should be felt by the operator (increase in the tightening effort). Crimping of the insert is correct when it no longer has any rotational play; this should be checked before removing the pull rod - mandrel assembly.

RENAULT

Technical Note 560A

All types

Other sub-sections concerned: 54A

General procedure for bonding windows and sunroof assembly

General information, equipment, tools and products, operating procedures for removal, preparation and fitting bonded windows and sunroof assembly.

77 11 295 462 **Edition 3 - NOVEMBER 2005** **EDITION ANGLAISE**

"The repair procedures given by the manufacturer in this document are based on the technical specifications current when it was prepared.

The procedures may be modified as a result of changes introduced by the manufacturer in the production of the various component units and accessories from which his vehicles are constructed."

All rights reserved by RENAULT s.a.s.

Copying or translating, in part or in full, of this document or use of the service part reference numbering system is prohibited without the prior written authority of RENAULT s.a.s.

© Renault s.a.s. 2005

Contents

Page

54A WINDOWS

General information:
– Basic rules 54A-1
– Diagrams of operating principles 54A-3
Equipment and tools:
– Protection, cutting, gripping, application 54A-4
Products:
– Composition of bonding kits 54A-7
– Product information 54A-10
Operating procedures:
– Removal 54A-15
– Fitting 54A-17
– Special notes about the cement bead 54A-27

I. INTRODUCTION

Bonded windows form an integral part of the vehicle structure.

The adhesives recommended for repair operations have been tested in ***RENAULT*** laboratories according to precise specifications.

To ensure optimum safety and product quality, carefully observe:
- the safety instructions,
- the recommended instructions for use,
- the repair procedures.

This note may change depending on the product, equipment and tools.

II. INDIVIDUAL PROTECTION:

IMPORTANT
Always wear protective gear (gloves, goggles and breathing masks).

III. REPAIR TIME

Vehicle which is equipped with: / Bonding kit used	No airbag One airbag	Two airbags
Bipac + 2	30 minutes	1 hour
Monopac + 2	1 hour	2 hours
Monopac	1 hour 30 minutes	3 hours

All of the times indicated are the minimum vehicle repair times for a temperature of **20 °C** with **50 %** relative humidity.

Do not use single component products at temperatures below **10 °C**.

IMPORTANT
It is essential that these repair times are observed in order to guarantee optimal safety.

IMPORTANT
Never mix the products when carrying out any adhesive bonding process.
Only products contained in the selected bonding kit must be used. Shake the primers for **at least 1 minute** before use.

IV. PROHIBITED PRODUCTS

Contact between the adhesive product and any of the following products is prohibited:

- **THINNERS**
- **GREASES**
- **OILS**
- **ALCOHOLS**
- **PRE-TREATMENT PRIMER (before drying)**
- **SILICONE PRODUCTS**
- **SOAP AND SOAPY WATER**

In the event of serious contamination (with silicone type products), clean with distilled water or acetone before carrying out any preparation work.

Note:
Most cases where water is entering the vehicle result from the bonding procedures not being observed. Lay down the cement bead so that it is perpendicular to the mounting to be bonded.

Replacing a window or sunroof assembly:

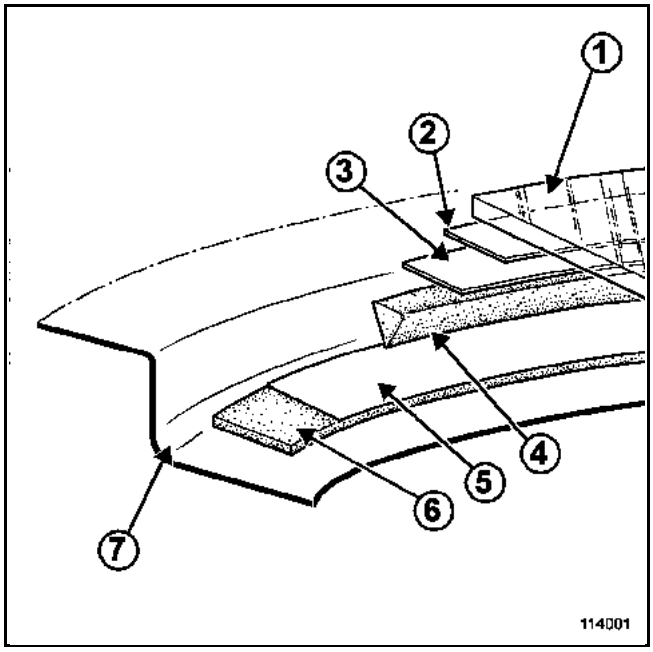

1 Glass + screen printing or sunroof assembly (Parts Department)
2 Glass cleaner (yellow mark)
3 Primer (green mark) for the glass
4 Cement bead
5 Primer (red mark) for the residual bead
6 Residual bead
7 Bodywork mounting

Removing - refitting a window or sunroof assembly:

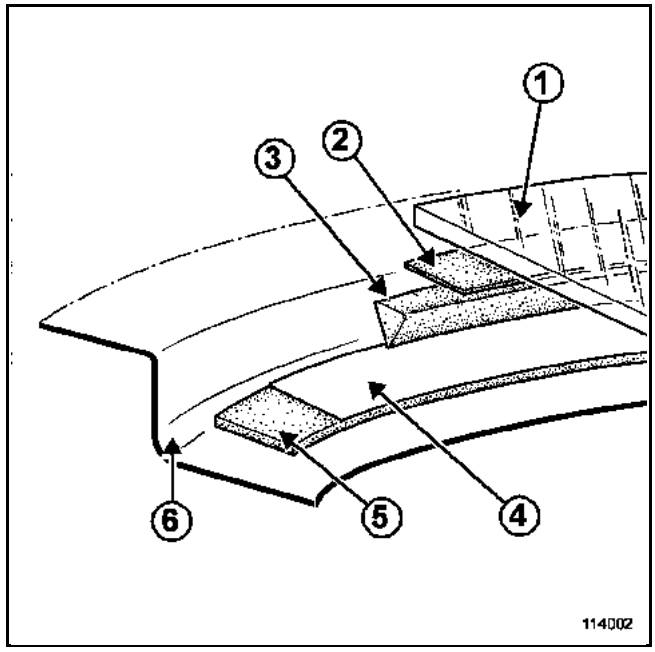

1 Glass + screen printing or sunroof assembly removed
2 Residual bead on window or sunroof assembly
3 Cement bead
4 Primer (red mark) for the residual bead
5 Residual bead
6 Bodywork mounting

Examples of equipment and tools:

PROTECTION

Dashboard protector

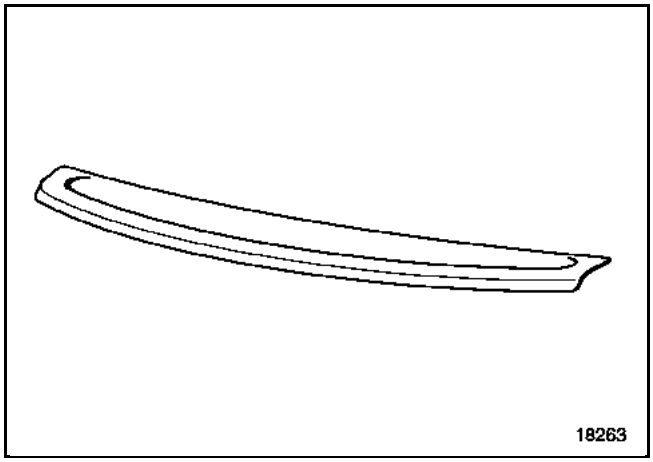

CUTTING OPERATION

Cutting wire insertion tool

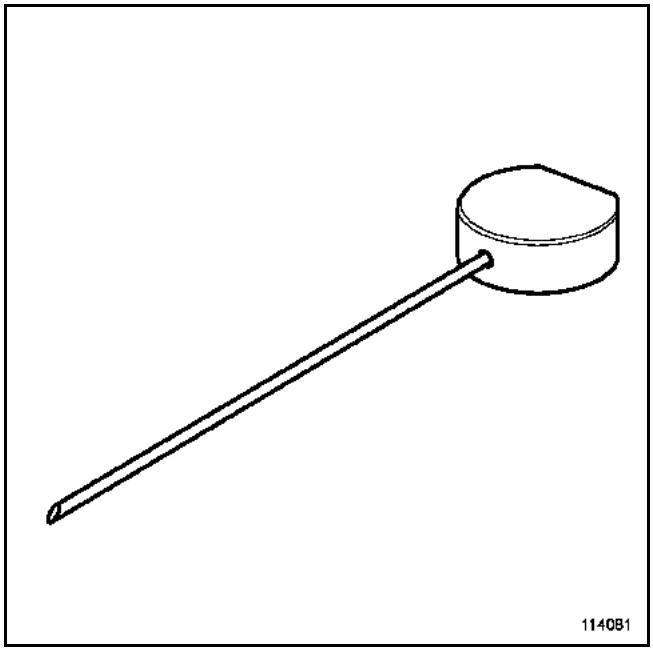

Wire insertion tool

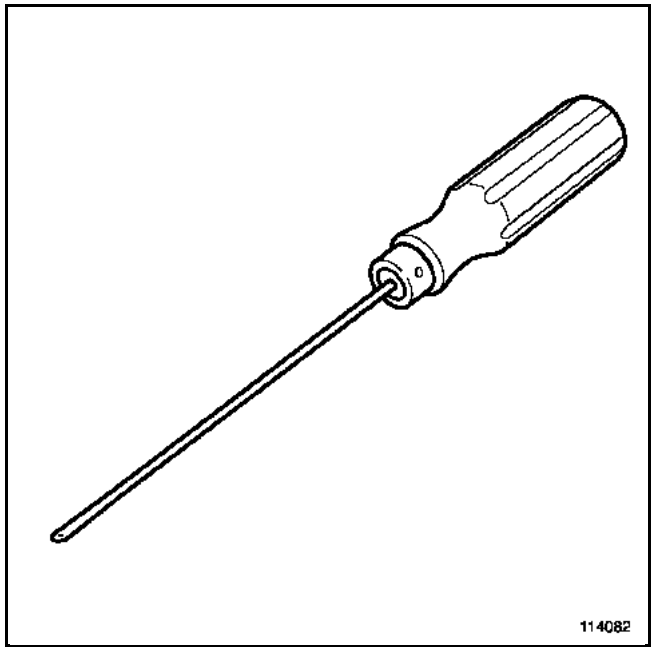

Cutting wire

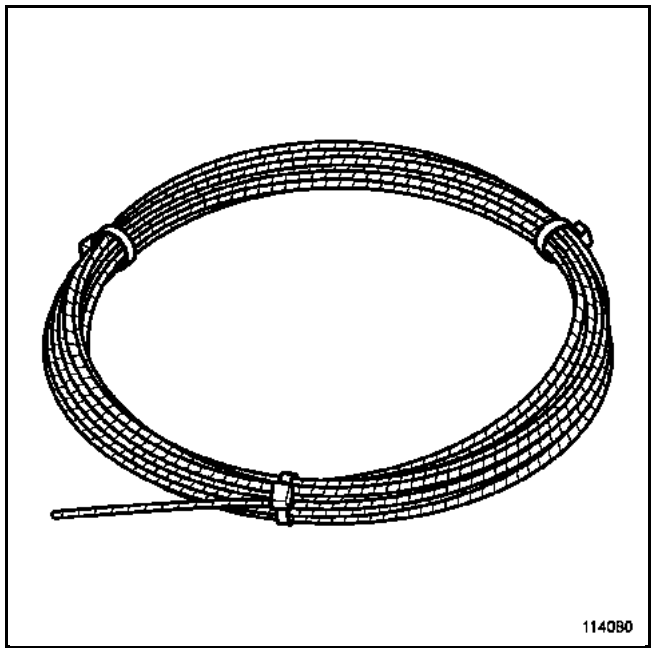

Part no.: 77 11 210 485

Pulling handle

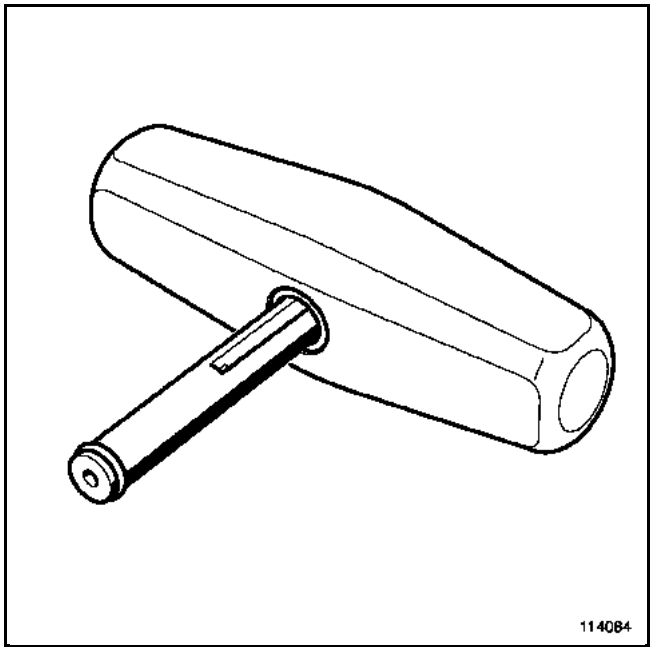

Support tool

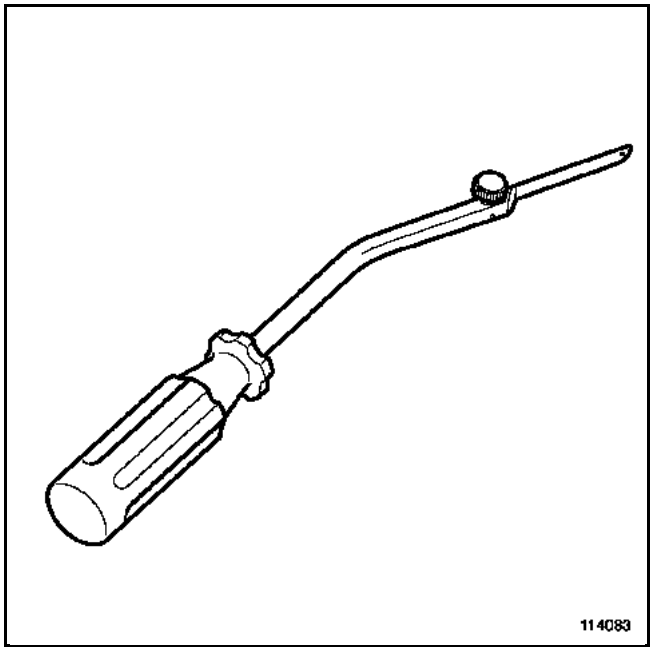

Pneumatic or electric cutting tool

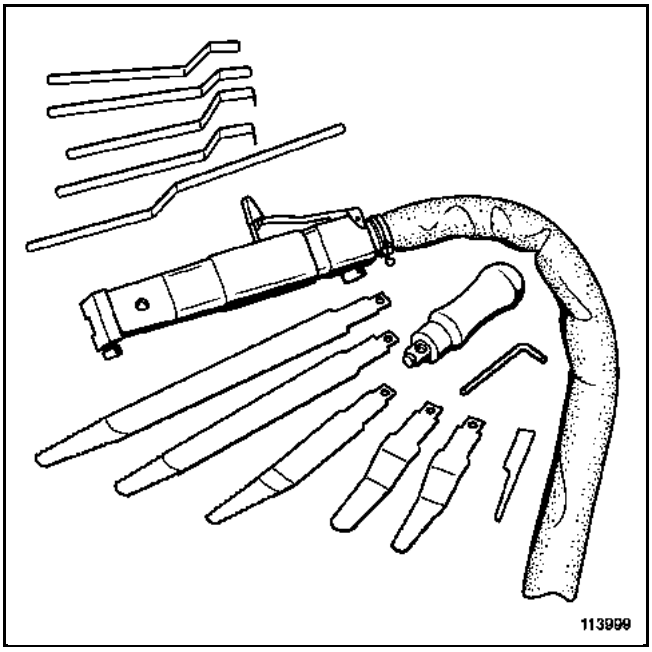

GRIPPING

Supporting suction cups

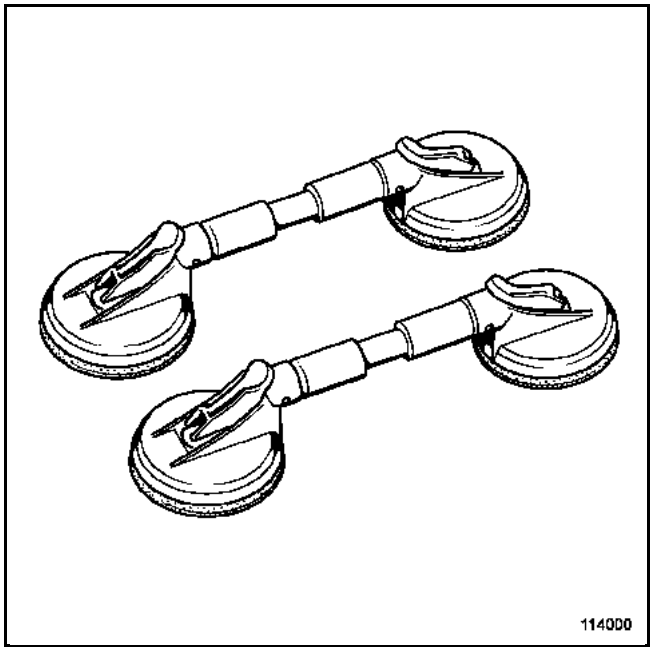

PARV 202 + APARV 200 ESP (for sunroof assembly) and PARV 200 (for windscreen)

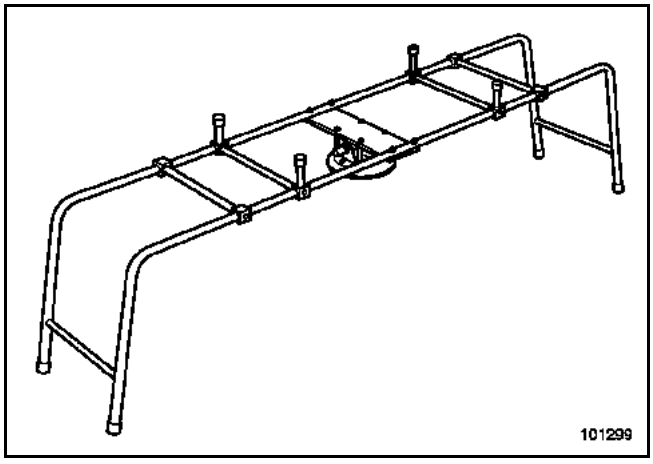

Note:
When removing - refitting the sunroof assembly, use two **PARV 202** and two **APARV 200 ESP**.

APPLICATION

Nozzle for dual component adhesive

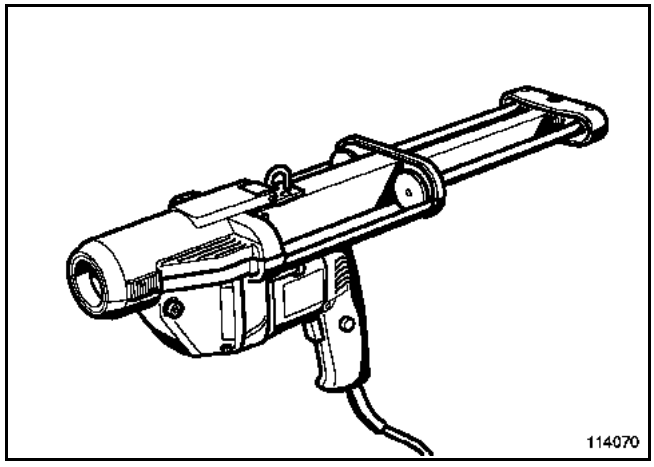

Part no.: 77 01 408 909

Nozzle for single component adhesive

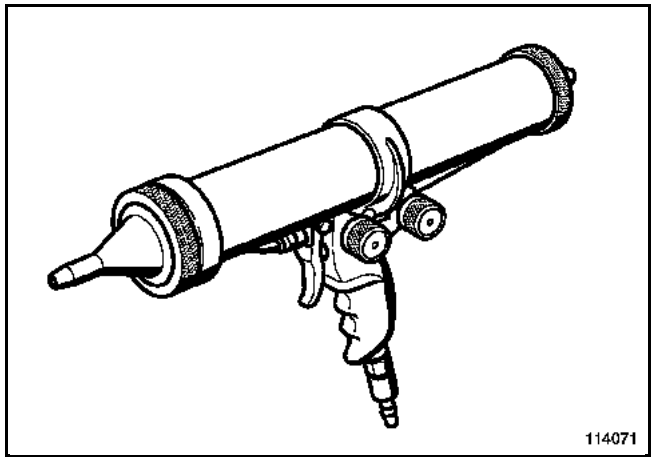

Part no.: 77 11 171 310

IMPORTANT
Never mix the products when carrying out any adhesive bonding process.
Only products contained in the selected bonding kit must be used.
The expiry date on the packaging of the bonding kit must be respected.

MONOPAC bonding kit (conductive adhesive) Part no.: **77 11 222 570**
– Additional cartridge + nozzle (**Part no.: 77 11 222 571**)

– One **310 ml** cartridge
– One packet of glass cleaner or activator including two wipes: one wet and one dry
– One **15 ml** bottle of primer (green mark)
– One **15 ml** bottle of primer (red mark)
– Two primer applicators
– One pair of gloves
– One preparation nozzle for the cartridge
– One application nozzle for the cement bead

MONOPAC + 2 bonding kit (high modulus, non conductive adhesive)
Part no.: **77 11 218 570**
– Additional cartridge + nozzle (**Part no.: 77 11 218 571**)

– One **310 ml** cartridge
– One packet of glass cleaner or activator including two wipes: one wet and one dry
– One **10 ml** tube of primer (green mark)
– One **10 ml** tube of primer (red mark)
– One pair of gloves
– One preparation nozzle for the cartridge
– One application nozzle for the cement bead

BIPAC + 2 bonding kit (high modulus, non conductive adhesive)
Part no.: 77 11 219 552

- Two **225 ml** cartridges: adhesive and accelerator
- One mixer
- One packet of glass cleaner or activator including two wipes: one wet and one dry
- One **10 ml** tube of primer (green mark)
- One **10 ml** tube of primer (red mark)
- One pair of gloves
- One application nozzle for the cement bead

CLEANING PRODUCTS

Heptane

Part no.: 77 11 170 064

Heptane is a highly volatile solvent and allows optimal cleaning of the area surrounding the bond.
It evaporates quickly.

Glass cleaner or activator

Most of the new windows from the Parts Department are already primed when they are supplied. This primed area shows the bonding path.
The glass cleaner or activator reactivates this primer and promotes adhesion.

IMPORTANT
This product containing active agents must be cleaned with the dry wipe before applying the primer (green mark) supplied in the bonding kit.

PRIMERS

Primers ensure that cement beads adhere to different mountings.
They also protect the cement bead from ultraviolet rays which can damage the molecular structure of the cement bead and lower its resistance.

Primer (green mark)

114073

This is only applied to a new window after the glass cleaner or activator has been applied and is dry.

IMPORTANT
Wipe away any product outside the bonding area immediately (as it may mark the window).

Primer (red mark)

114074

This is applied to lacquer, cataphoresis, primed mountings, composite materials and residual beads.

NOTE
Wipe away any product visible outside the bonding area immediately.

Additional primer

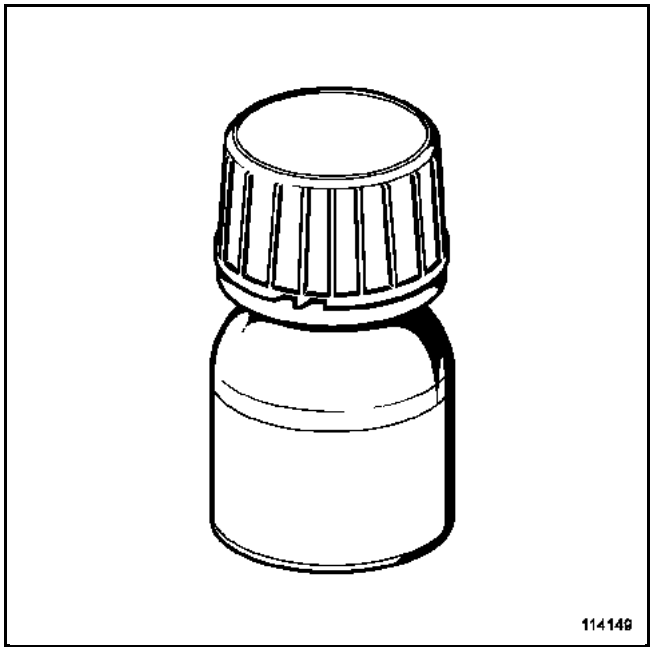

Part no.: 77 11 219 620

This provides anti-corrosion protection.

It is applied to uncoated sheet metal on damaged areas greater than **2 mm**.

USE OF PRIMER TUBES

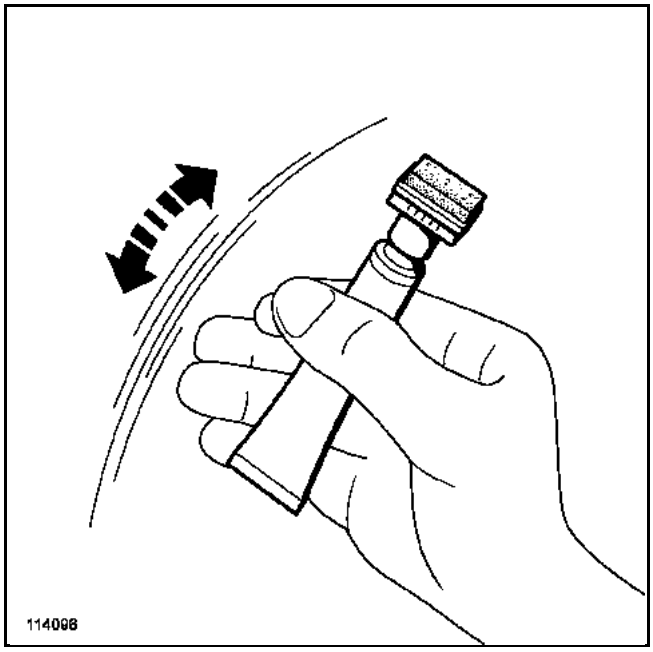

Shake the tubes for approximately **1 minute** so that the product has an even consistency.

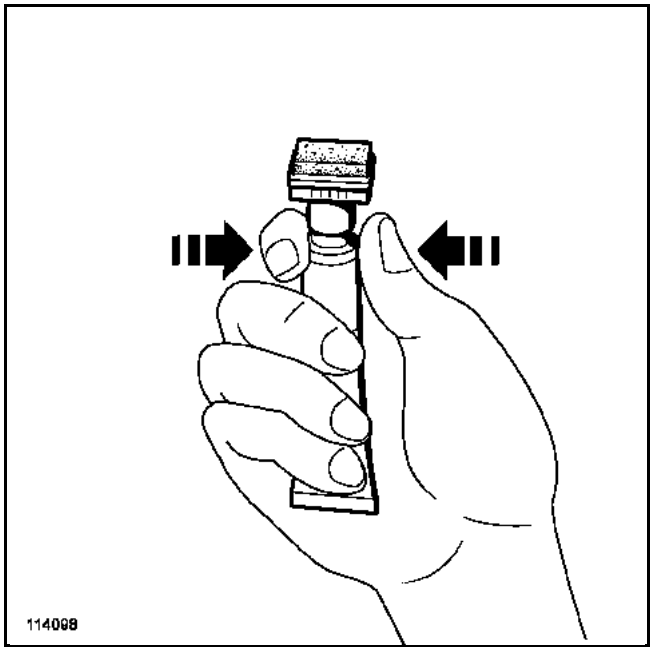

Hold the neck of the tube, ensuring that the applicator pad is pointing upwards.

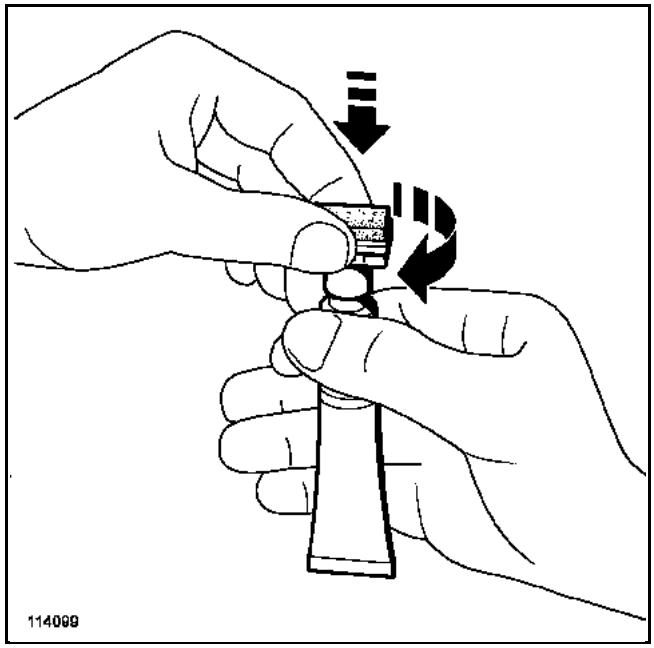

Screw the applicator pad on properly so that the tube is well sealed.

Soak the applicator pad.

Apply a uniform layer of primer to the bonding area in a single stroke.

Note:
Ensure that all damaged areas are covered with primer.

IMPORTANT
Wipe away any primer visible outside the bonding area immediately.

Leave to dry for a minimum of **10 minutes**.
Never apply the cement bead onto wet primer.

USE OF ADDITIONAL PRIMER

Shake the bottle for approximately **1 minute** so that the product has an even consistency.

It is applied to uncoated sheet metal on damaged areas greater than **2 mm**.

After applying the product, leave it to dry for a minimum of **30 minutes**.

Note:
If applying primer to an aluminium mounting (see **Technical Note 573A**).

PREPARATION

IMPORTANT
Gloves and protective goggles must be worn when removing a window or sunroof assembly.

IMPORTANT
A suitable work station must be used when replacing a window or sunroof assembly.

Protect the vehicle interior.

Remove the various interior and exterior trims and accessories (see **MR for the relevant vehicle**).

Protect the bodywork around the window or sunroof assembly using masking tape.

Fit the dashboard protector specific to the vehicle (see **MR for the relevant vehicle**) or remove the top of the dashboard (according to the vehicle).

CUTTING OPERATION

Make a hole in the cement bead using a wire insertion tool.

Note:
Place the wire insertion tool into the most accessible part of the window or sunroof assembly.

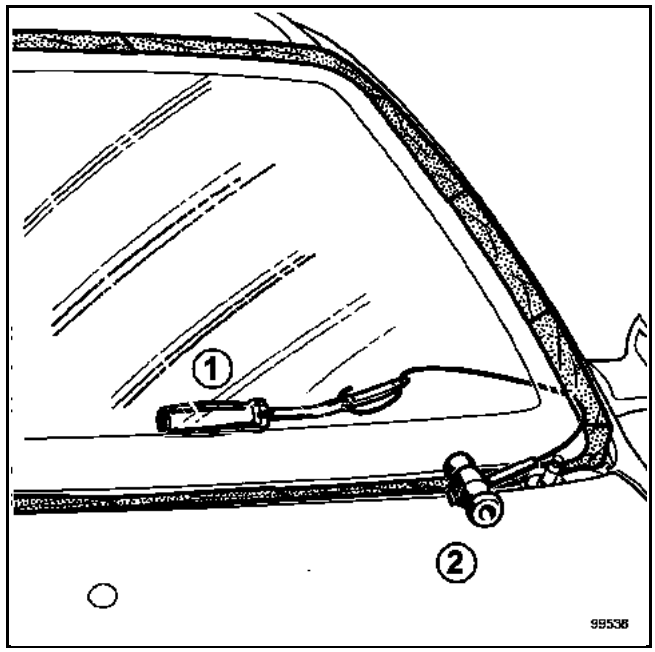

The first operator threads support tool (**1**) through the cement bead into the vehicle interior, passing through approximately **300 mm** of wire.

The second operator pulls the pulling handle on the vehicle exterior (**2**) in the same direction as the first operator's tool.

Repeat this operation until the cement bead is completely cut.

IMPORTANT
Ensure that the cutting wire does not cut the:
– trim mounting,
– bodywork,
– window or sunroof assembly.

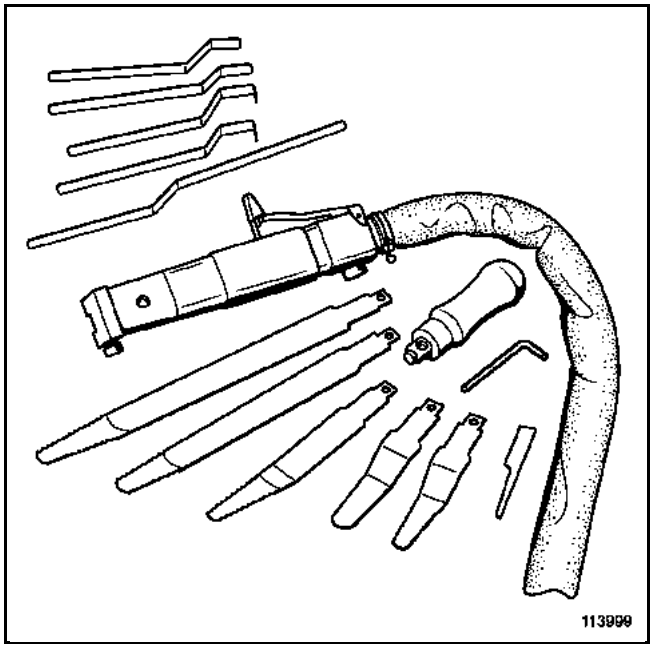

The cement bead can be cut using a pneumatic cutting tool (see **Technical Note 414A, Pneumatic tool for removing bonded windows**) or an electric cutting tool.

PREPARATION AND BONDING PROCEDURES

Special notes for preparation and bonding operations.
For cutting operations, see **54A, Windows, Operating procedures: Removal**.

On bodywork components	
Original bodywork component: Examples: Removal - Refitting and/or replacing a window or sunroof assembly.	**Procedure 1**
Bodywork component repaired and/or replaced: Examples: replacing the roof or windscreen frame.	**Procedure 2**
New bodywork component (Parts Department): Examples: Uncoated bodywork supplied painted, cataphoretic steel tailgate, primed plastic tailgate.	**Procedure 3**
On windows	
New windows (Parts Department)	**Procedure 4**
Removed window (with residual bead)	**Procedure 5**
On sunroof assembly	
New sunroof assembly (Parts Department)	**Procedure 6**
Removed sunroof assembly (with residual bead)	**Procedure 7**

PROCEDURE 1	ON ORIGINAL BODYWORK COMPONENT

Carefully clean the bonding area with heptane and wipe with a lint-free cloth (avoiding the cement bead).

↓

Level down the residual bead (leave a **1 to 2 mm** layer of beading).

↓

Apply the primer (red mark) to the entire bonding area (residual/lacquered bead).
Leave to dry for a minimum of **10 minutes**.

Note:
For aluminium bodywork: see **Technical Note 573A**.

↓

Prepare the window or the sunroof assembly (procedures 4, 5, 6 or 7).

↓

Apply the cement bead (preferably on the window) and bond immediately.

PROCEDURE 2	ON REPAIRED AND/OR REPLACED BODYWORK COMPONENT

Carefully clean the bonding area with heptane and wipe with a lint-free cloth (avoiding the cement bead).

↓

Apply the additional primer to the uncoated sheet metal (damaged area greater than **2 mm**)
Part no.: **77 11 219 620**.

Leave to dry for a minimum of 30 minutes.

↓

Protect the bonding area with masking tape before painting.

After painting:
– remove the masking tape,
– carefully clean the bonding area with heptane and wipe with a lint-free cloth.

↓

Level down the residual bead (leave a **1 to 2 mm** layer of beading).

↓

A

PROCEDURE 2	ON REPAIRED AND/OR REPLACED BODYWORK COMPONENT (continued)

A

Apply the primer (red mark) to the entire bonding area (residual/lacquered bead).
Leave to dry for a minimum of **10 minutes**.

Note:
Apply the primer one hour after the component has been completely dried and cooled.

Note:
For aluminium bodywork:
see Technical Note 573A.

Prepare the window or sunroof assembly (procedure 4, 5, 6 or 7).

Apply the cement bead (preferably on the window) and bond immediately.

PROCEDURE 3	ON NEW BODYWORK COMPONENT (Parts Department)

Before painting, roughen the bonding area with a grey roughening pad.

Carefully clean the bonding area with heptane and wipe with a lint-free cloth.

Protect the bonding area with masking tape.

↓

After painting, remove the masking tape.

Carefully clean the bonding area with heptane and wipe with a lint-free cloth.

↓

B

PROCEDURE 3	ON NEW BODYWORK COMPONENT (Parts Department) (continued)

B

Apply the primer (red mark) to the entire bonding area.
Leave to dry for a minimum of **10 minutes**.

Note:
Apply the primer one hour after the component has been completely dried and cooled.

Note:
For aluminium bodywork: see Technical Note 573A.

Prepare the window or sunroof assembly (procedure 4, 5, 6 or 7).

Apply the cement bead (preferably on the window) and bond immediately.

PROCEDURE 4	ON NEW WINDOWS (Parts Department)

Check that it is the correct window, and check for the absence of faults or cracks.

↓

Carefully clean the bonding area with heptane and wipe with a lint-free cloth.

↓

Fit the trims (according to the vehicle).

↓

Perform a test installation for the vehicle window.

↓

Apply the glass cleaner/activator
(yellow mark)
or wet wipe
(According to the composition of the bonding kit).

Clean immediately with the dry wipe.

↓

Apply the primer (green mark) around the window following the bonding path.
Leave to dry for a minimum of **10 minutes**.

↓

Apply the cement bead
and
bond immediately.

PROCEDURE 5	ON REMOVED WINDOW (with residual bead)

Check for the absence of faults or cracks.

↓

Carefully clean the bonding area with heptane and wipe with a lint-free cloth, avoiding the cement bead.

↓

Level down the residual bead (leave a **1 to 2 mm** layer of beading).

↓

Fit the trims (according to the vehicle).

↓

Perform a test installation for the vehicle window.

↓

Area without residual bead
Example: if there is an adhesion fault.

↓

Apply the glass cleaner/activator (yellow mark) or wet wipe (according to the composition of the bonding kit).

Clean immediately with the dry wipe.

↓

Apply the primer (green mark).

Leave to dry for a minimum of **10 minutes**.

↓

Area with residual bead.

↓

Apply the cement bead and bond immediately.

PROCEDURE 6	ON NEW SUNROOF ASSEMBLY (Parts Department)

Carefully clean the bonding area with heptane and wipe with a lint-free cloth.

↓

Fit the indexing guides and positioning shims onto the sunroof assembly.

↓

Apply the primer (red mark) to the entire bonding area.
Leave to dry for a minimum of **10 minutes**.

↓

Apply the cement bead and bond immediately.

PROCEDURE 7	ON REMOVED SUNROOF ASSEMBLY (with residual bead)

Carefully clean the bonding area with heptane and wipe with a lint-free cloth, avoiding the cement bead.

↓

Level down the residual bead (leave a **1 to 2 mm** layer of beading).

↓

Fit the indexing guides and positioning shims onto the sunroof assembly.

↓

Area without residual bead
Example: if there is an adhesion fault.

Area with residual bead.

↓

Apply the primer (red mark) to the entire bonding area.
Leave to dry for a minimum of **10 minutes**.

↓

Apply the cement bead and bond immediately.

IMPORTANT
If using a **Bipac + 2** bonding kit, squeeze out **100 to 150 mm** of beading so that the product has an even consistency before it is applied.

IMPORTANT
Non conductive adhesive must be used (**See Products, Composition of bonding kits**) for the following cases:
– vehicle aerial integrated into the window (may disrupt radio reception),
– aluminium structures (may lead to corrosion).

APPLICATION

Level down the residual bead as late as possible to maximise cleanliness (reduced risk of contamination).

The cement bead must be triangular in shape (an adhesive application nozzle is supplied in each bonding kit).

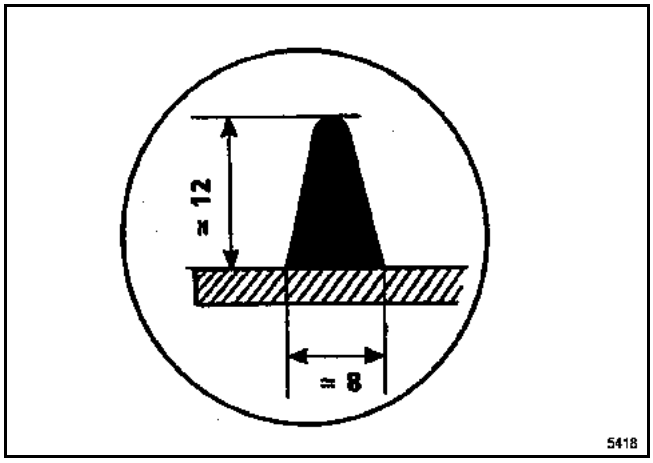

If you do not have a special nozzle, respect the size of bead (in millimetres).

Apply adhesive to the windows (rather than the mounting) for the following reasons:

Application on windows

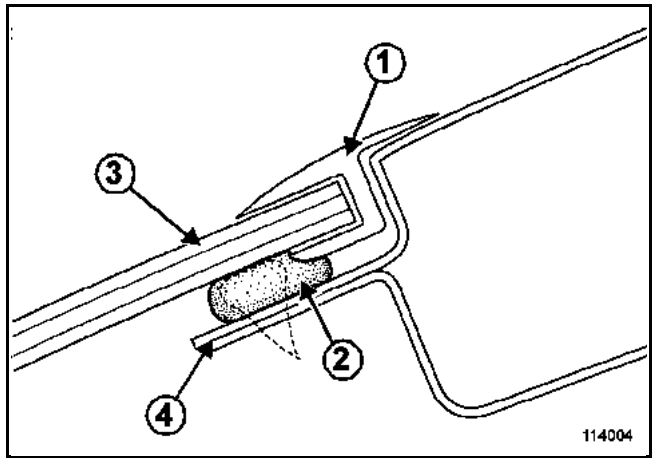

– the working position is ideal,
– the trim (**1**) can be used as a guide,
– the cement bead (**2**) is removed in the correct way; it acts as a link between the window (**3**) and the mounting (**4**).

Application on mounting

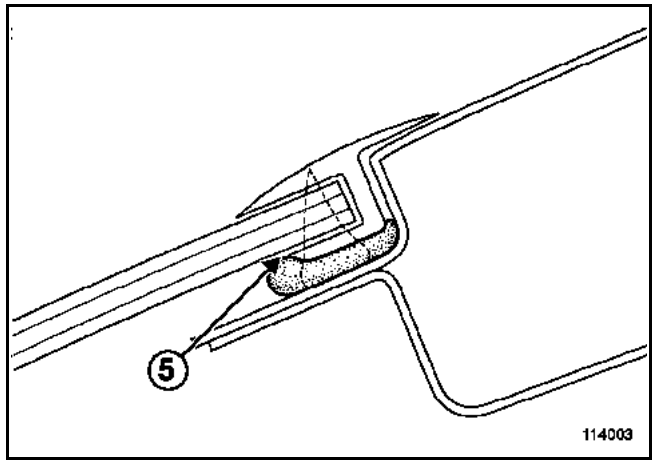

– the working position is poor,
– there are no marks to aid the application of the cement bead,
– laying down the cement bead without a guide may prevent it from making contact with the window (**5**) in places and may result in a sealing fault.

The bead must be even and applied perpendicular to the bonding area (starting with the bottom and centre of the mounting when bonding a window).

The join is made at the end of the application by overlapping the beads by approximately **50 mm**.

Application on window or mounting

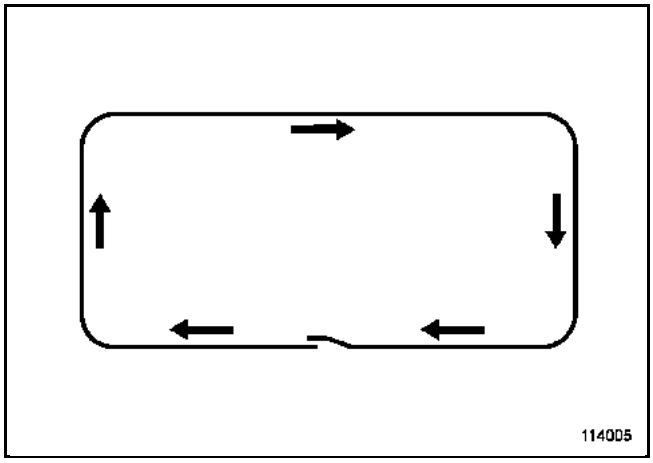

Application on sunroof assembly or mounting

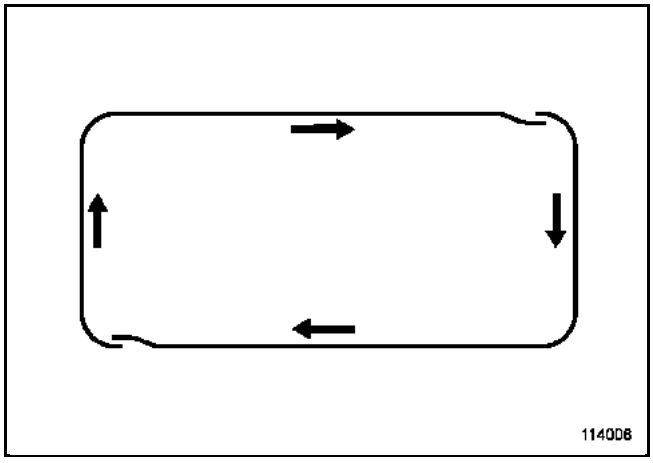

Note:
After laying down the cement bead, fit the window or sunroof assembly onto the vehicle immediately.

All Types

Type	S/Section
XXX X	40A

This note cancels and replaces the Technical Note dated August 2002

40A REPAIRING THREADING ON BODYWORK COMPONENTS

If a thread on a bodywork component is damaged, it can be repaired by one of two methods:
1 - by replacing the captive nut,
2 - by fitting an insert in the orignal nut.

"The repair methods given by the manufacturer in this document are based on the technical specifications current when it was prepared.

The methods may be modified as a result of changes introduced by the manufacturer in the production of the various component units and accessories from which his vehicles are constructed."

All copyrights reserved by RENAULT.

Copying or translating, in part or in full, of this document or use of the service part reference numbering system is forbidden without the prior written authority of RENAULT.

© RENAULT 2002

REPLACING CAPTIVE NUTS

This operation can only be carried out if the nut is not located in a hollow section and has a thread smaller than or equal to M8.

The operation involves removing the old nut using a bit with a diameter slightly larger than the thread, then refitting a new nut available from the Parts Store using tool **Car. 1504** following the procedure described in Technical Note **532A**.

REPAIRING A THREAD USING AN INSERT

This operation can be performed on thread diameters up to M12.

A complete kit has been approved for this operation and will be available to order from the supplier (see the Workshop materials and equipment catalogue).

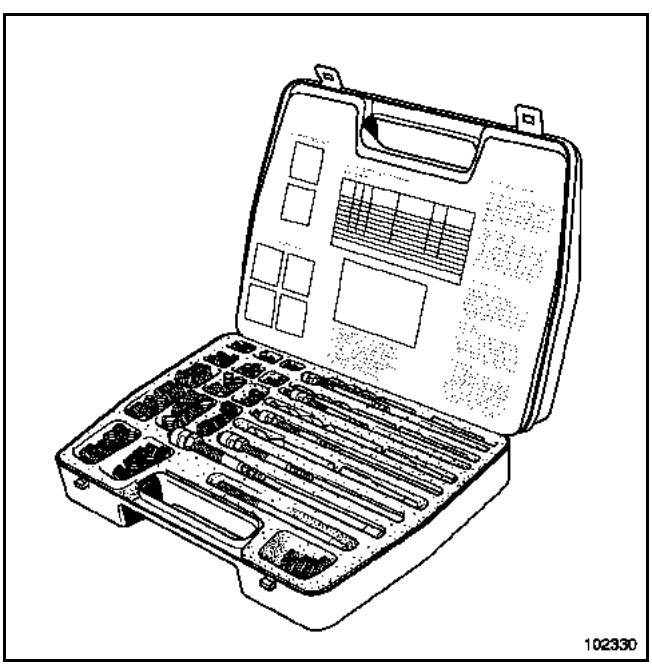

Approval N°: 1000 900
Kit part no.: HC type 4186000000 specific to RENAULT
Supplier: BOLLHOFF OTALU SA.

ANTI-CORROSION PROTECTION

After fitting the thread repair, it is necessary to perform an anticorrosion protection operation on section (A) of the re-threaded insert. To do this, inject some protective wax for hollow sections in the crimped nut before refitting the bolt.

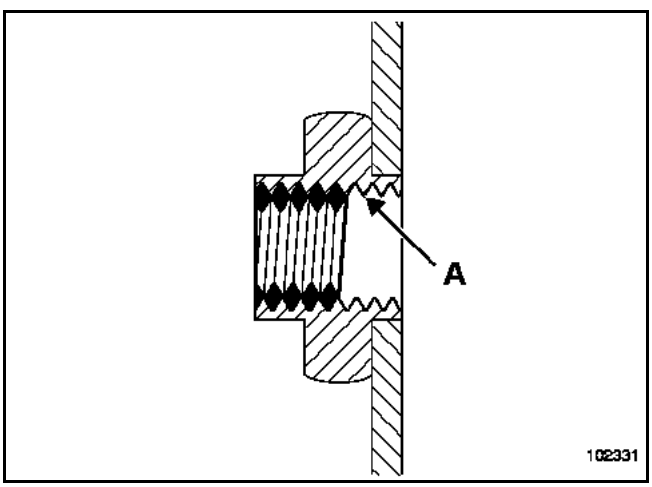

Example of tie-rod mounting on the front side member of the LAGUNA

Ordering

It is possible to order this kit through "CISCAR" using the number opposite.

In all other cases, orders are to be made directly to the supplier by using the part number opposite.

RENAULT

Technical Note586A

X84, and K84

Special features of the MEGANE Sports Tourer

MEGANE Sports Tourer: KMXX

Basic manual: MR 365

Sub-sections concerned: 01C - 03B - 05B - 40A - 41C - 41D - 43A - 44A - 45A - 47A - 48A - 52A - 54A - 55A - 56A - 59A - 71A - 73A

Special bodywork features of the MEGANE Sports Tourer.

Edition 2

77 11 319 662 **NOVEMBER 2005** **Edition Anglaise**

"The repair methods given by the manufacturer in this document are based on the technical specifications current when it was prepared.

The methods may be modified as a result of changes introduced by the manufacturer in the production of the various component units and accessories from which his vehicles are constructed."

All copyrights reserved by Renault.

The reproduction or translation in part of whole of the present document, as well as the use of the spare parts reference numbering system, are prohibited without the prior written consent of Renault.

© Renault s.a.s. 2006

Special features of the MEGANE Sports Tourer

Contents

Page

01C VEHICLE BODYWORK SPECIFICATIONS

Vehicle: Specifications 01C-1

Vehicle: Towing and lifting 01C-3

Vehicle clearances: Adjustment values 01C-4

03B IMPACT

Parts to be replaced according to impact Description 03B-1

05B BODYWORK EQUIPMENT AND TOOLING

Body jig bench: Description 05B-1

40A GENERAL VEHICLE INFORMATION

Sub-frame: Specifications 40A-1

Earths on the body: List and location of components 40A-4

Vehicle side section structure: Description 40A-5

Rear structure: Parts description 40A-6

Vehicle removable section structure: Description 40A-7

41C SIDE LOWER STRUCTURE

Sill panel: Description 41C-1

Rear inner sill panel: Description 41C-4

41D REAR LOWER STRUCTURE

Rear floor rear section: Removal - Refitting 41D-1

Rear side member: Description 41D-6

Rear end lower cross member: Description 41D-8

Far rear lower cross member, side section: Description 41D-9

Rear impact lower cross member: Removal - Refitting 41D-10

43A SIDE UPPER STRUCTURE

Upper body panel: Description 43A-1

Rear roof drip moulding reinforcement: Removal - Refitting 43A-3

Roof drip moulding lining: Description 43A-4

Contents

44A REAR UPPER STRUCTURE

Rear wing panel: Description 44A-1

Lights support lining: Description 44A-4

C-pillar closure panel: Description 44A-5

Outer rear wheel arch: Description 44A-6

Rear wheel arch closure panel, front section: Description 44A-8

Rear wheel arch closure panel, rear section: Description 44A-9

Quarter panel lining: Description 44A-10

Quarter panel reinforcement: Description 44A-12

Rear end panel assembly: Description 44A-13

Rear end panel: Description 44A-14

45A TOP OF BODY

Roof: Description 45A-1

Roof panel arch: Description 45A-3

Roof rear cross member: Description 45A-4

48A NON-SIDE OPENING ELEMENTS

Tailgate: Adjusting 48A-1

Tailgate: Stripping-Rebuilding 48A-2

Tailgate: Removal - Refitting 48A-7

Fuel filler flap: Removal - Refitting 48A-9

52A NON-SIDE OPENING ELEMENT MECHANISMS

Tailgate lock: Removal - Refitting 52A-1

Tailgate exterior opening control: Removal - Refitting 52A-2

54A WINDOWS

Rear quarter panel window: Removal - Refitting 54A-1

Rear screen glass: Removal - Refitting 54A-2

Opening rear screen glass: Removal - Refitting 54A-4

55A EXTERIOR PROTECTION

Rear bumper: Removal - Refitting 55A-1

Rear bumper: Stripping-Rebuilding 55A-3

Tailgate strip: Removal - Refitting 55A-5

Roof protective strip: Removal - Refitting 55A-6

56A EXTERIOR ACCESSORIES

Tailgate spoiler: Removal - Refitting 56A-1

59A SAFETY ACCESSORIES

Rear seat belt: Removal - Refitting 59A-1

Contents

71A **BODY INTERIOR TRIM**

Luggage compartment carpet: Removal - Refitting 71A-1

Rear wheel arch lining: Removal - Refitting 71A-2

C-pillar upper trim: Removal - Refitting 71A-5

Rear quarter panel trim: Removal - Refitting 71A-7

Rear end panel lining: Removal - Refitting 71A-8

73A **NON-SIDE OPENING ELEMENT LINING**

Tailgate lining: Removal - Refitting 73A-1

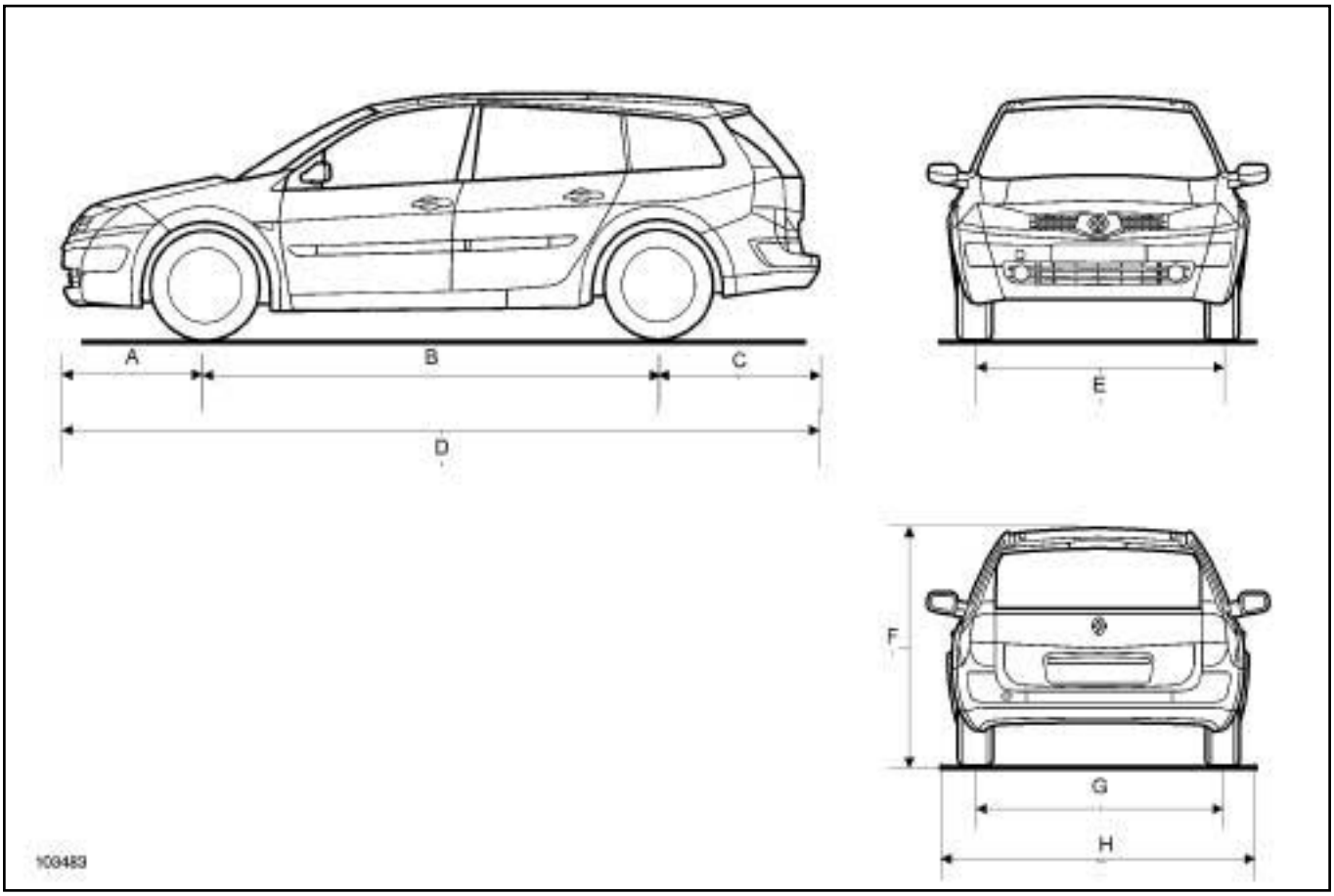

103483

Dimensions in metres :

(**A**)	0.842
(**B**)	2.686
(**C**)	0.972
(**D**)	4.500
(**E**)	1.518
(**F**) (unladen)	1.467
(**G**)	1.514
(**H**)	1.777

Vehicle type	**Engine**		**Gearbox**
	Type	**Cubic capacity (cc)**	
KM0B	K4J 730	1390	JH3
KM0H	K4J 730	1390	JH3

Vehicle type	Engine		Gearbox
	Type	Cubic capacity (cc)	
KM0C	K4M760	1598	JH3
KM0J	K4M760	1598	JH3
KM0J	K4M761	1598	DP0
KM0F	K9K 722	1461	JR5
KM02	K9K 728	1461	JR5
KM0U	F4R 770	1998	ND0
KM0U	F4R 771	1998	DP0
KM0G	F9Q 800	1870	ND0
KM00	F9Q 808	1870	ND0

VEHICLE IDENTIFICATION

Example: **KM0F**

K : Body type (estate)

M : Project code

0F : Engine suffix

Equipment required
diagnostic tool

WARNING

- See the current towing regulations in each country.
- Never use the drive shafts as attachment points.
- The towing points may only be used for towing on the road.
- Never use the towing points for removing the vehicle from a ditch or to lift the vehicle, either directly or indirectly.

Vehicles fitted with automatic transmission:

- The vehicle should preferably be towed on a platform or by raising the front wheels. If this is not possible, the vehicle may as an exception be towed at a speed below **20 km/h** for a maximum distance of **30 km/h** (gear selector in N position).

Vehicle equipped with RENAULT card:

- If the vehicle battery is flat, the steering column remains locked. In this event, fit a new battery or connect to an electrical supply to lock the airbag computer using the **diagnostic tool** (see **88C, Airbags and pretensioners, Airbag computer locking procedure**), which unlocks the steering column. If it is not possible to unlock the airbag computer, the front of the vehicle must be lifted.

FRONT

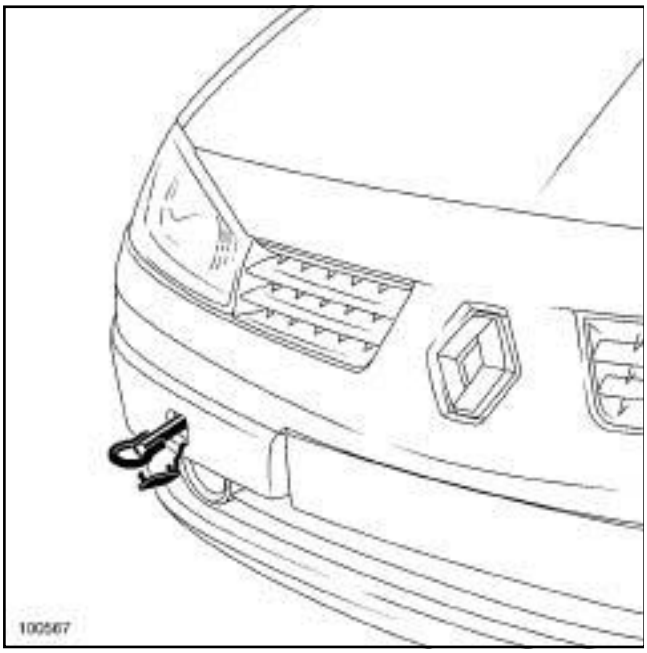

100567

REAR

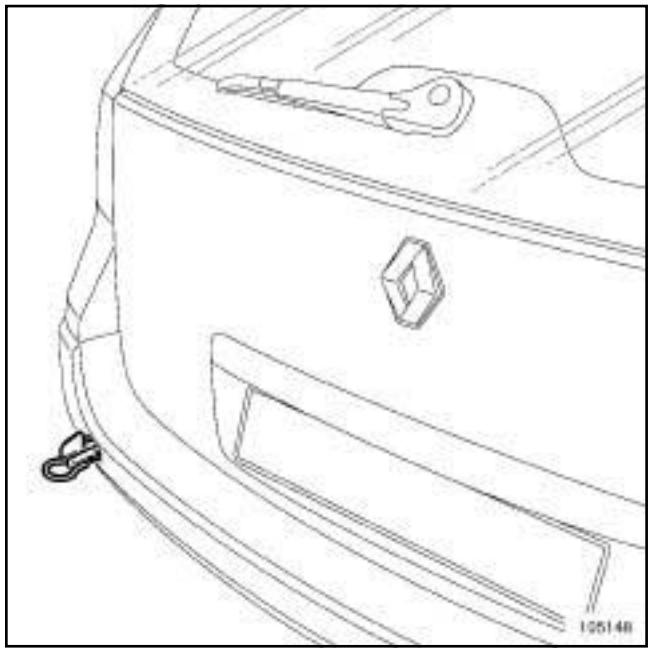

105148

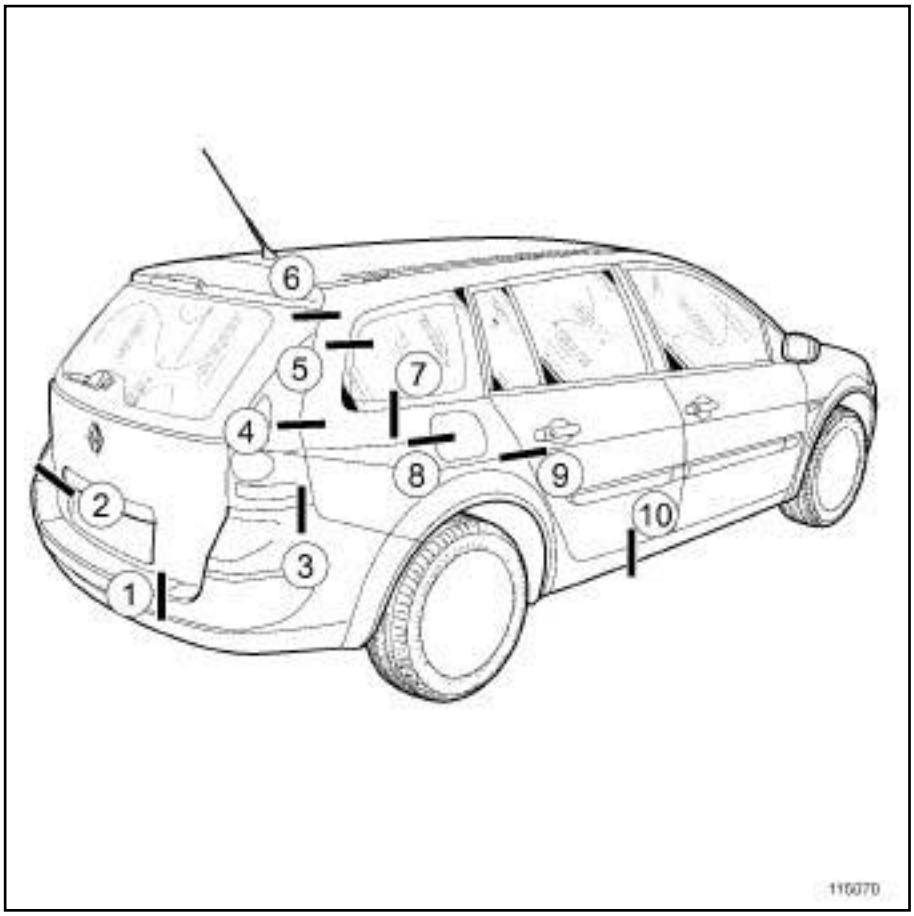

115070

WARNING

The clearance values are given for information purposes.

When adjusting, certain rules have to be followed:

- maintain symmetry with respect to the opposite side,
- ensure the flush fitting is correct,
- check correct operation of the opening, and water/ air-tightness.

Section 1

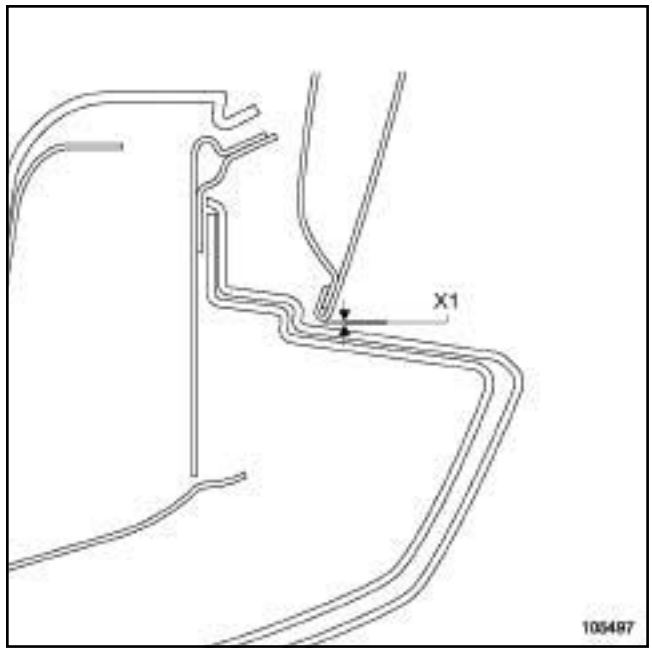

105497

(X1) = ± 4.5 mm

Section 2

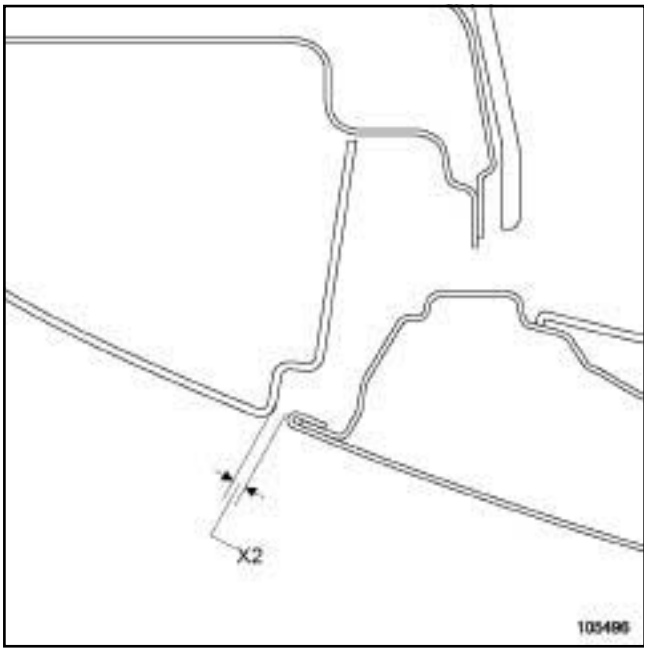

105496

(X2) = ± 5.6 mm

Section 3

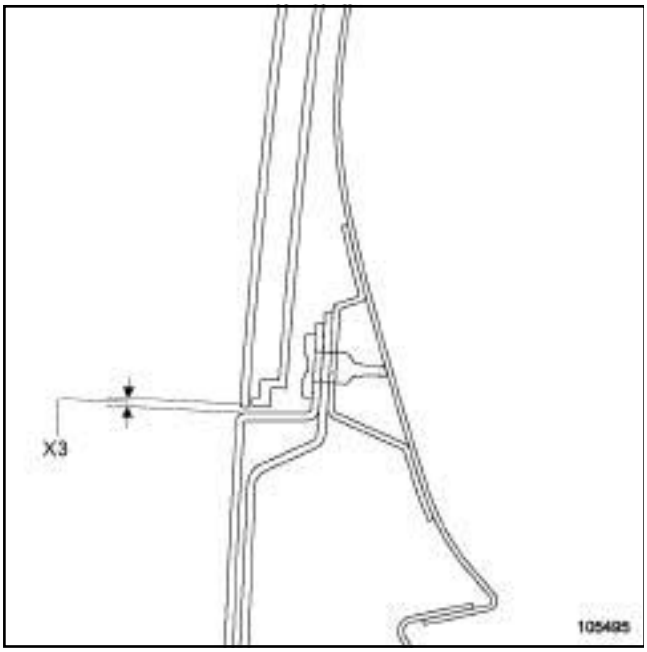

105495

(X3) = ± 1.5 mm

Section 4

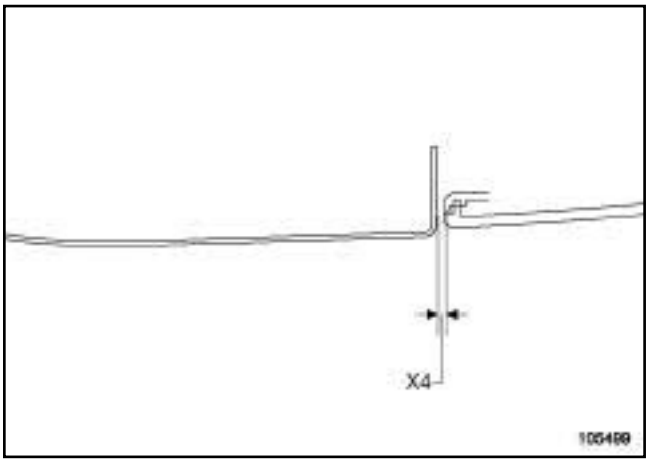

105499

(X4) = ± 1.5 mm

Section 5

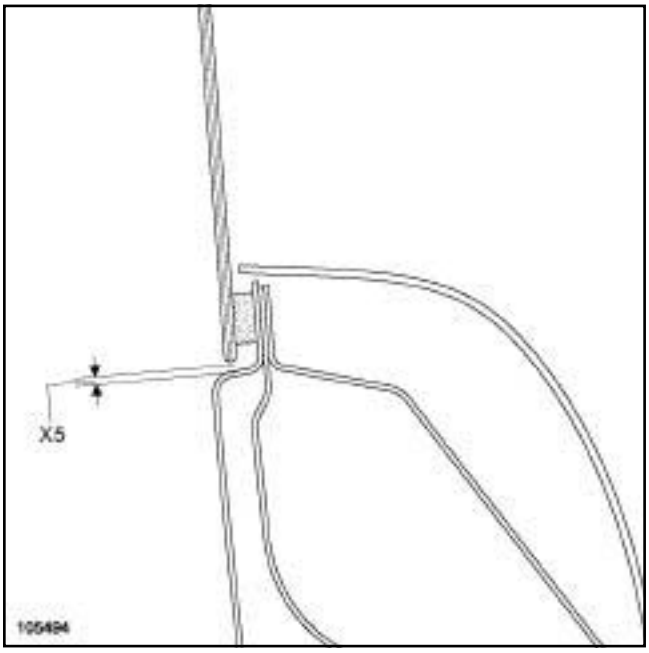

105494

(X5) = ± 3mm

Section 6

105502

(X6) = ± 4.5mm

Section 7

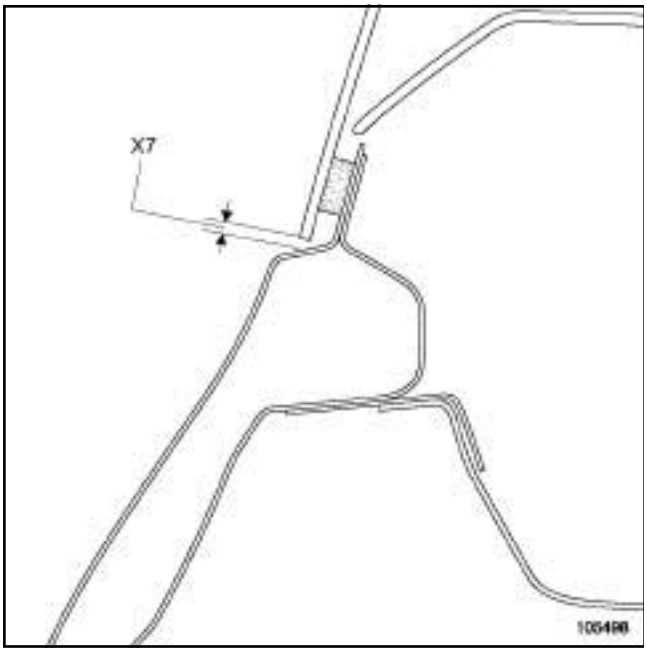

105498

(X7) = ± 3mm

Section 8

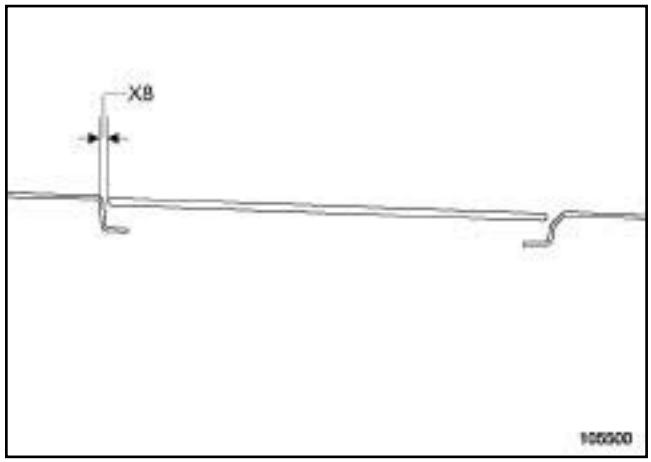

105500

(X8) = ± 2.5mm

Section 9

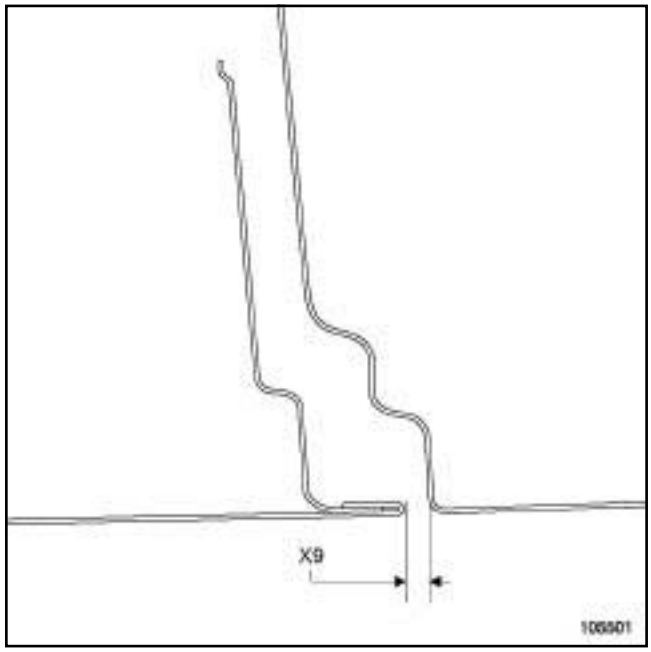

105501

(X9) = ± 4mm

Section 10

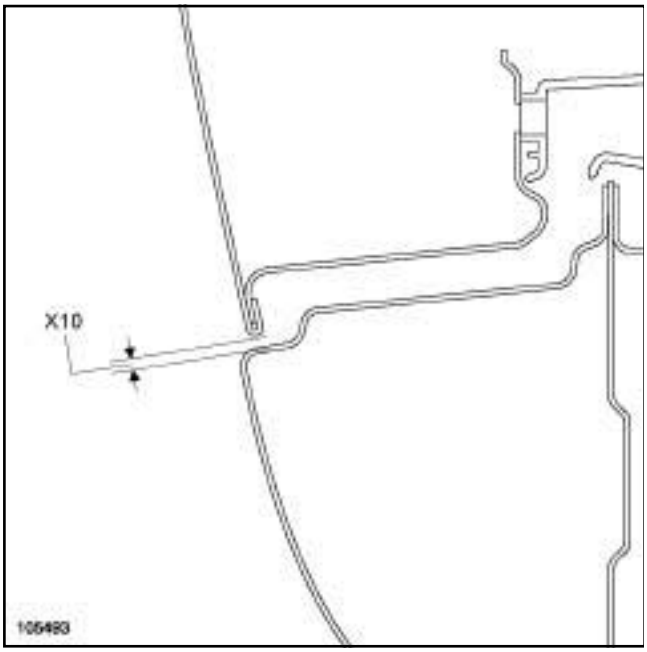

105493

(X10) = ± 4.5mm

REAR IMPACT

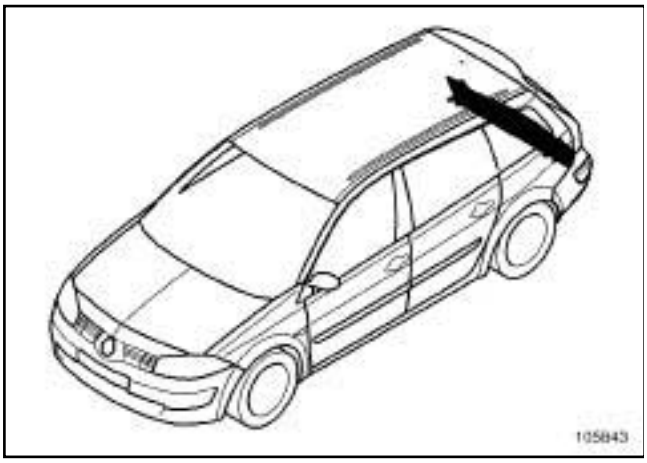

105843

1st Degree

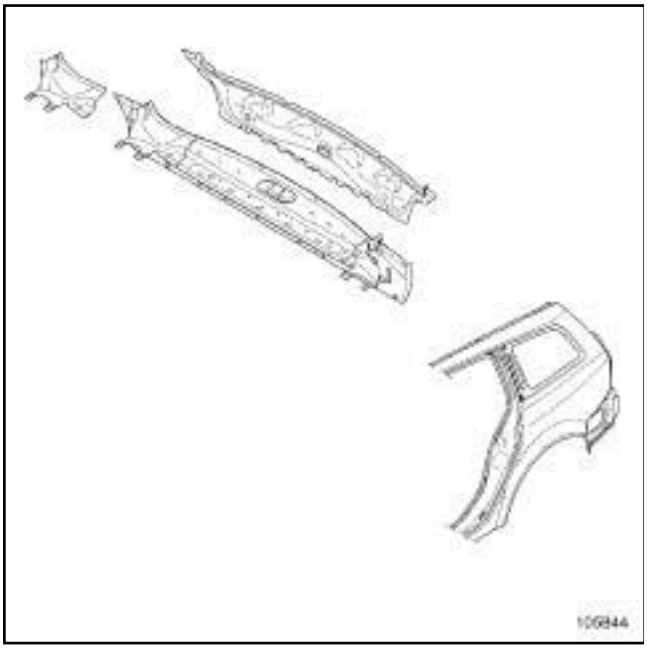

105844

Rear end panel

Rear end panel assembly

Rear wing panel

2nd Degree

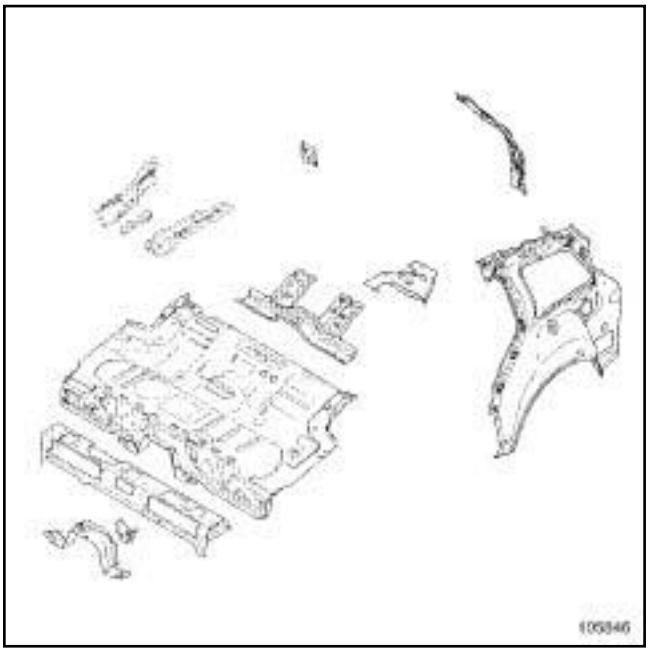

105846

Rear screen lower cross member

Rear lights support

Rear outer wheel arch

Rear end lower cross member side closure panel

Rear impact cross member mounting reinforcement

Rear side member closure panel, rear section

Sill panel reinforcement, rear section

Rear floor, front section with supports

3rd Degree

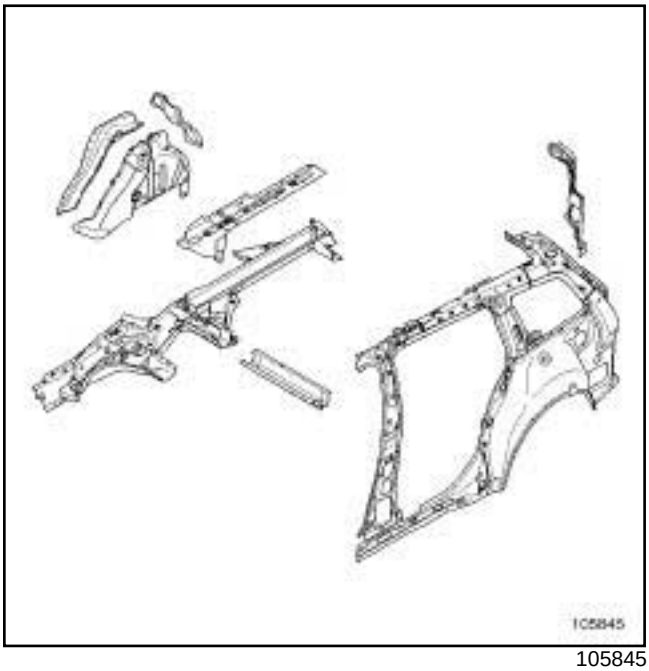

105845

Quarter panel lining

Rear wing panel rain channel

Rear wheel arch closure panel, rear section

Rear wheel arch closure panel, front section

Inner rear wheel arch

Rear side member

Rear side member closure panel

Centre cross member

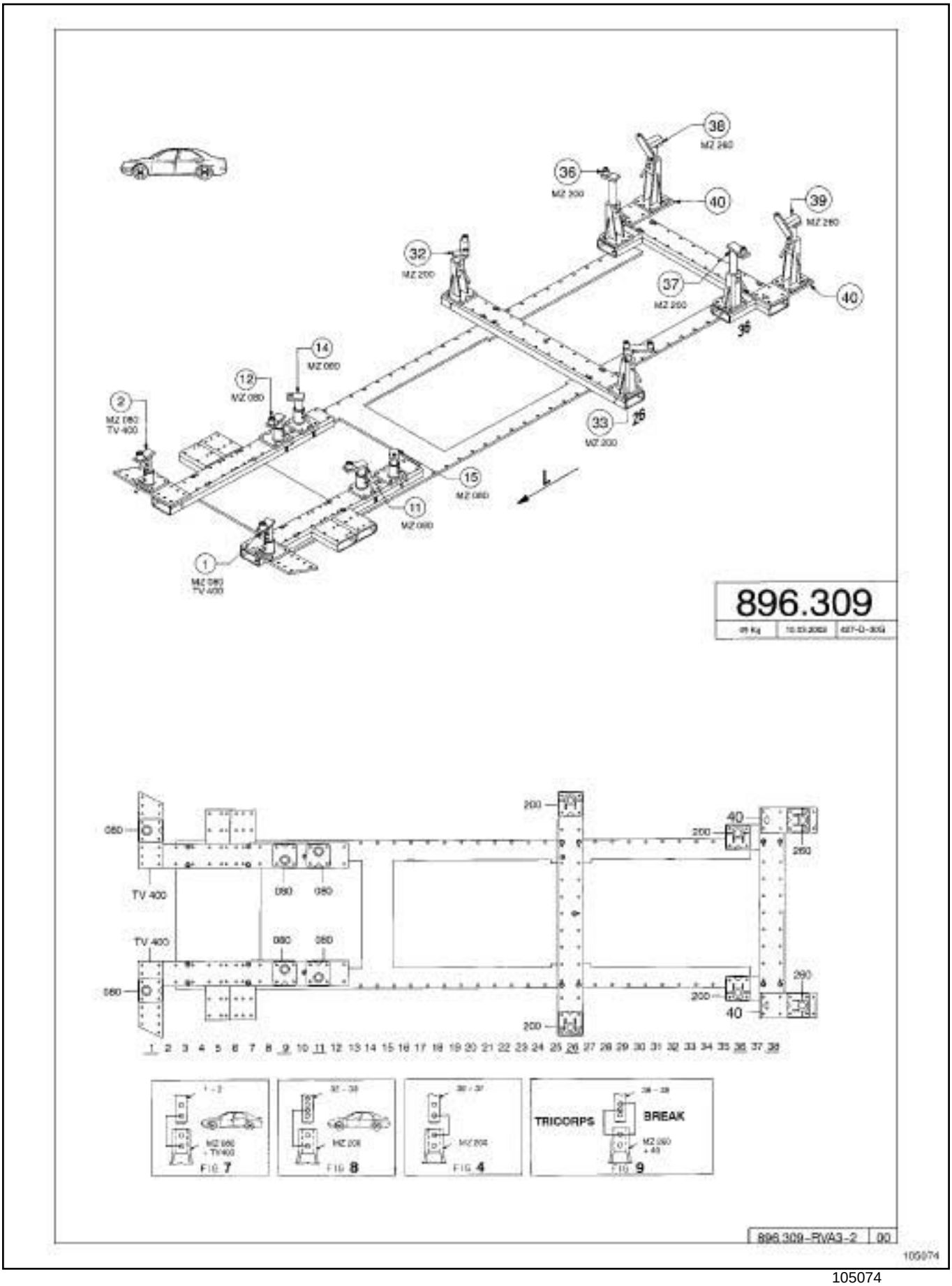
896.309
TRICORPS
BREAK
FIG 7
FIG 8
FIG 4
FIG 9
896 309-RVA3-2
00
105074

105074

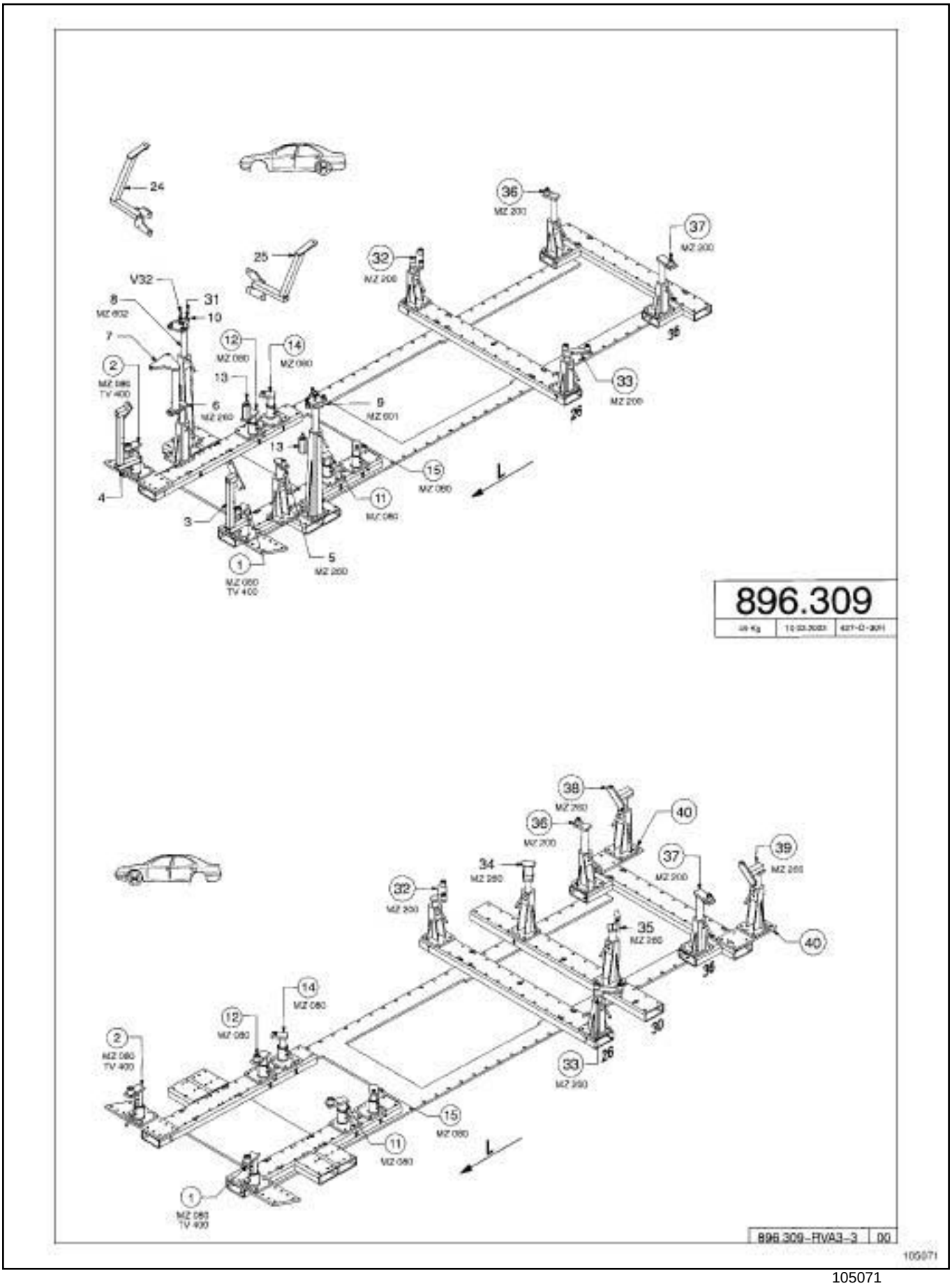

105071

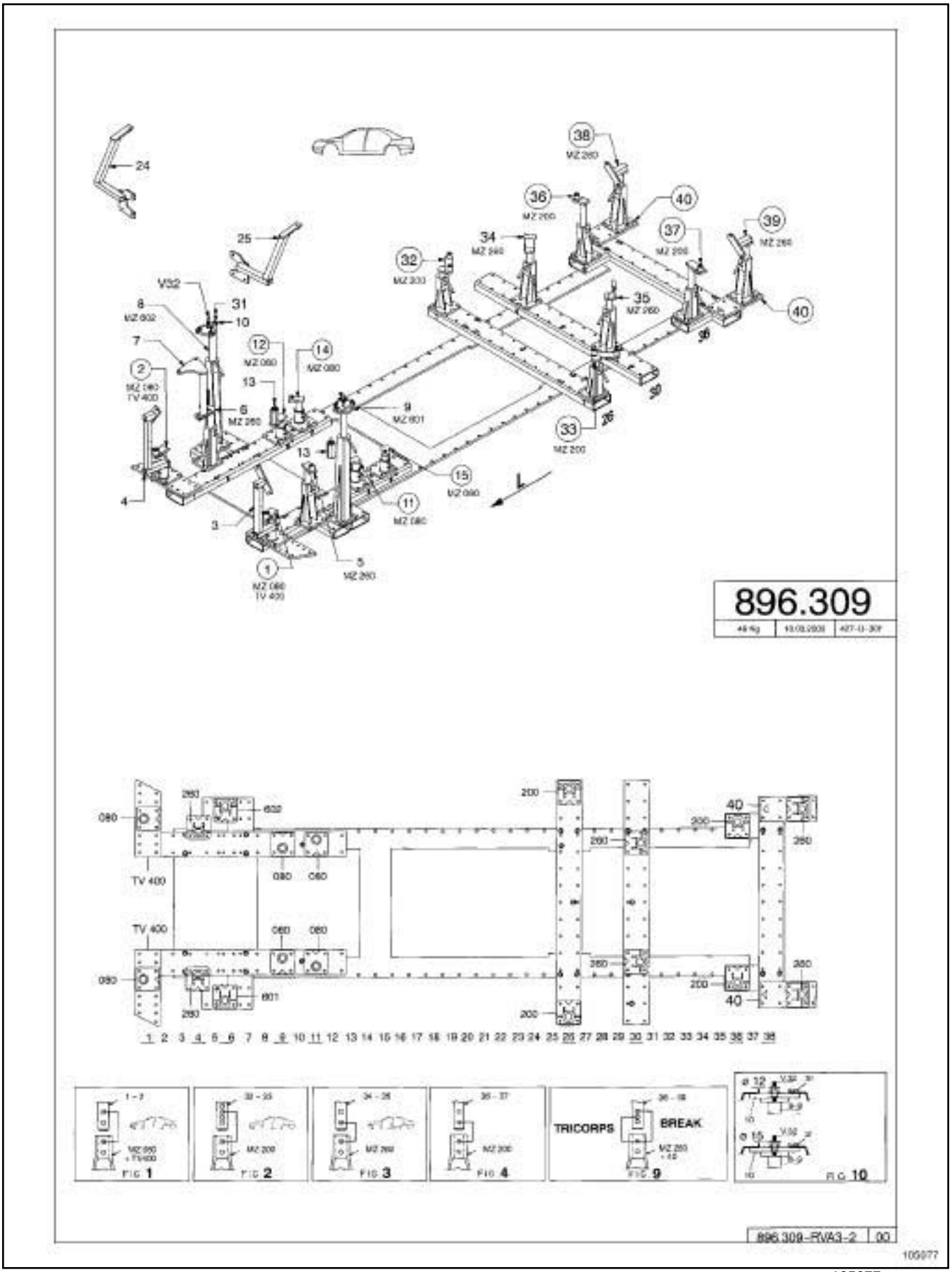
896.309
TRICORPS
BREAK
FIG 1
FIG 2
FIG 3
FIG 4
FIG 9
FIG 10
896.309-RVA3-2
00
105077

102454

CELETTE

Special heads for **Sytème MZ**

Order from: CELETTE S.A B.P 38026 VIENNA

Montage de base complet pour MEGANE : 896.309

A et B = référentiel de mise en assiette

	Description	X	Dimen-sion Y	Dimen-sion Z	Diameter	Angle %
A	Front sub-frame rear mounting without mechanical components	301	305	77.8	∅24.5; M12	0
	Front sub-frame rear mounting with mechanical components	301	305	6.5	M12	0
B	Rear axle leader pin without mechanical components	2208.2	-650.8	116	∅20.5; M10	0
B1	Rear axle assembly front mounting, without mechanical components	2100	-635	116	M10	0
	Rear axle assembly front mounting, with mechanical components	2100	-635	111	M10	0
B2	Rear axle assembly front mounting, without mechanical components	2191	-732.2	116	M10	0
	Rear axle assembly front mounting, with mechanical components	2191	-732.2	111	M10	0
C	Front sub-frame front mounting	-141.5	-478	252	M12	0
C*	Front sub-frame front mounting	141.4	477.9	261	M12	0
E	Rear shock absorber upper mounting	2494	-398	262.5	∅10.7; M10	90°
F1	Front shock absorber upper stop	-55.1	-602.1	687.3	M8	
F1*	Front shock absorber upper stop	82.7	601.8	670.4	M8	-
F2	Front shock absorber upper stop	50.7	-529.9	672.4	M8	
F2*	Front shock absorber upper stop	-24	530.1	681.4	M8	
F3	Front shock absorber upper stop	73.3	-631.8	672.2	M8	
F3*	Front shock absorber upper stop	-45.4	632.1	686.8	M8	
F4	Front shock absorber mounting leader pin	81.4	-598.2	670.4	17.2 x 17.2	
F4*	Front shock absorber mounting leader pin	-53.9	597.9	687.2	17.2 x 17.2	
G	Front side member rear leader pin	547	-408.6	-9.8	∅ 20.5	0
H	Front side member front leader pin without mechanical components	-525	-476	84.5	M12	0
	Front side member front leader pin with mechanical parts	-525	-476	80.7	M12	0
H*	Front side member front leader pin without mechanical components	-525	492	84	M12	0
	Front side member front leader pin with mechanical parts	-525	492	80.2	M12	0

	Description	X	Dimen-sion Y	Dimen-sion Z	Diameter	Angle %
J	Rear side member rear leader pin	3065	-563.5	235	20x20	0
J*	Rear side member rear leader pin	3065	563.5	235	20x20	0
K1	Front end cross member	-552.9	-439.3	410.9	M10	90°
K1*	Front end cross member	-552.2	447.6	409	M10	90°
K2	Front end cross member	-546.2	-535.1	276	M10	90°
K2*	Front end cross member	-546-3	533.6	276	M10	90°
K3	Front panel support additional mounting	-312.9	-737	634.5	M6	9.64°
L	Rear end cross member	3363.2	-515	295	M8	90°
L*	Rear end cross member	3363.2	572.2	295	M8	90°
L1	Rear end cross member	3363.2	-612.5	197.5	M8	90°
L1*	Rear end cross member	3363.2	474.7	197.5	M8	90°
P1	Engine mounting	-309.9	507	528.9	M10	0
P2	Engine mounting	-147.9	529	531.9	M10	0
R	Additional engine mounting (tie-rod)	-35.6	452.6	587	∅14.5; M12	0

Note:

The reference points located on the right-hand side of the vehicle are shown by an asterisk.

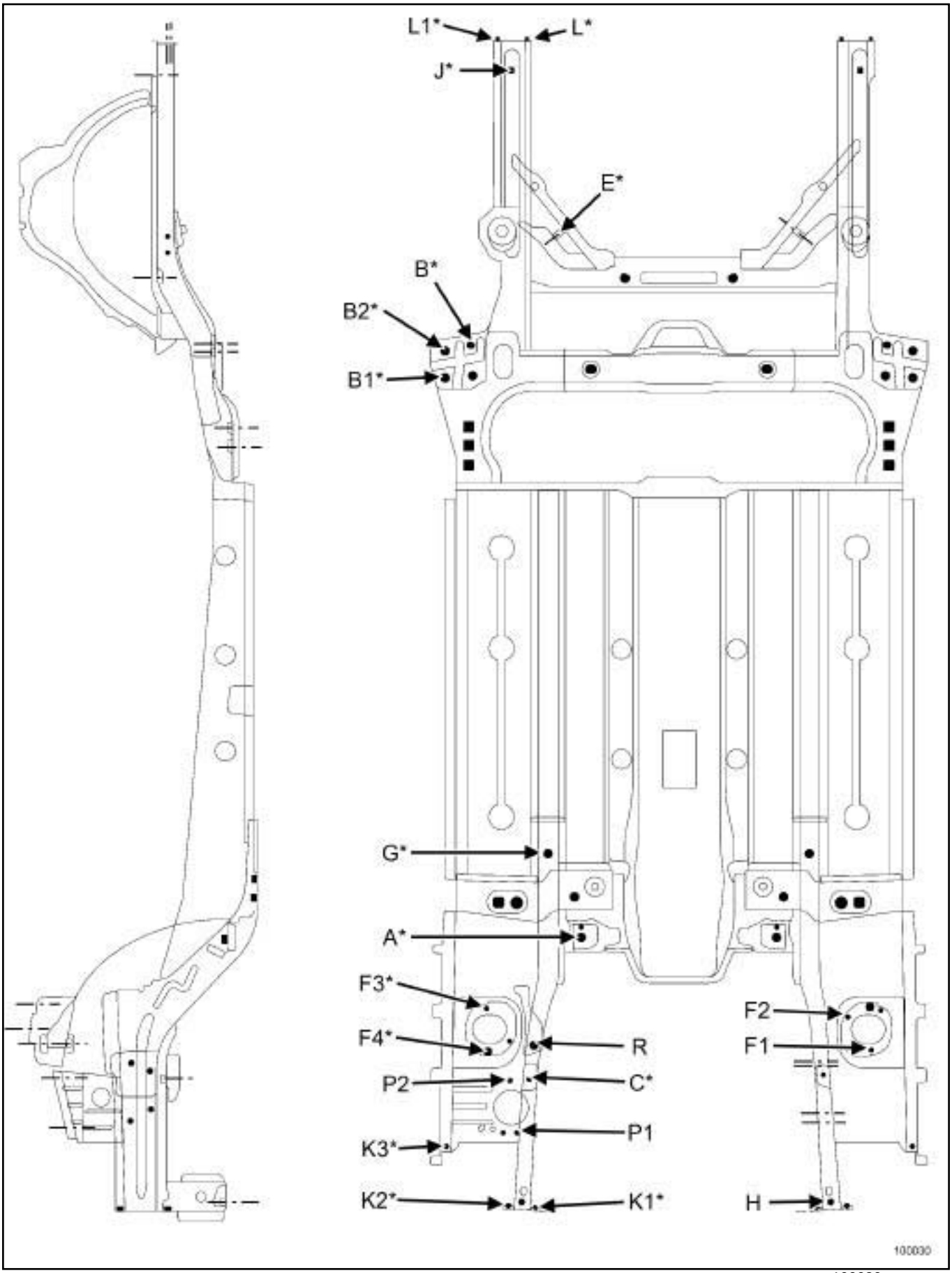

100030

IMPORTANT

To avoid damaging the vehicle's electric and electronic components, the battery and the earths of any wiring harness near the weld area must be disconnected.

The earth of the welding machine must be placed as close as possible to the weld area.

B-GROUND

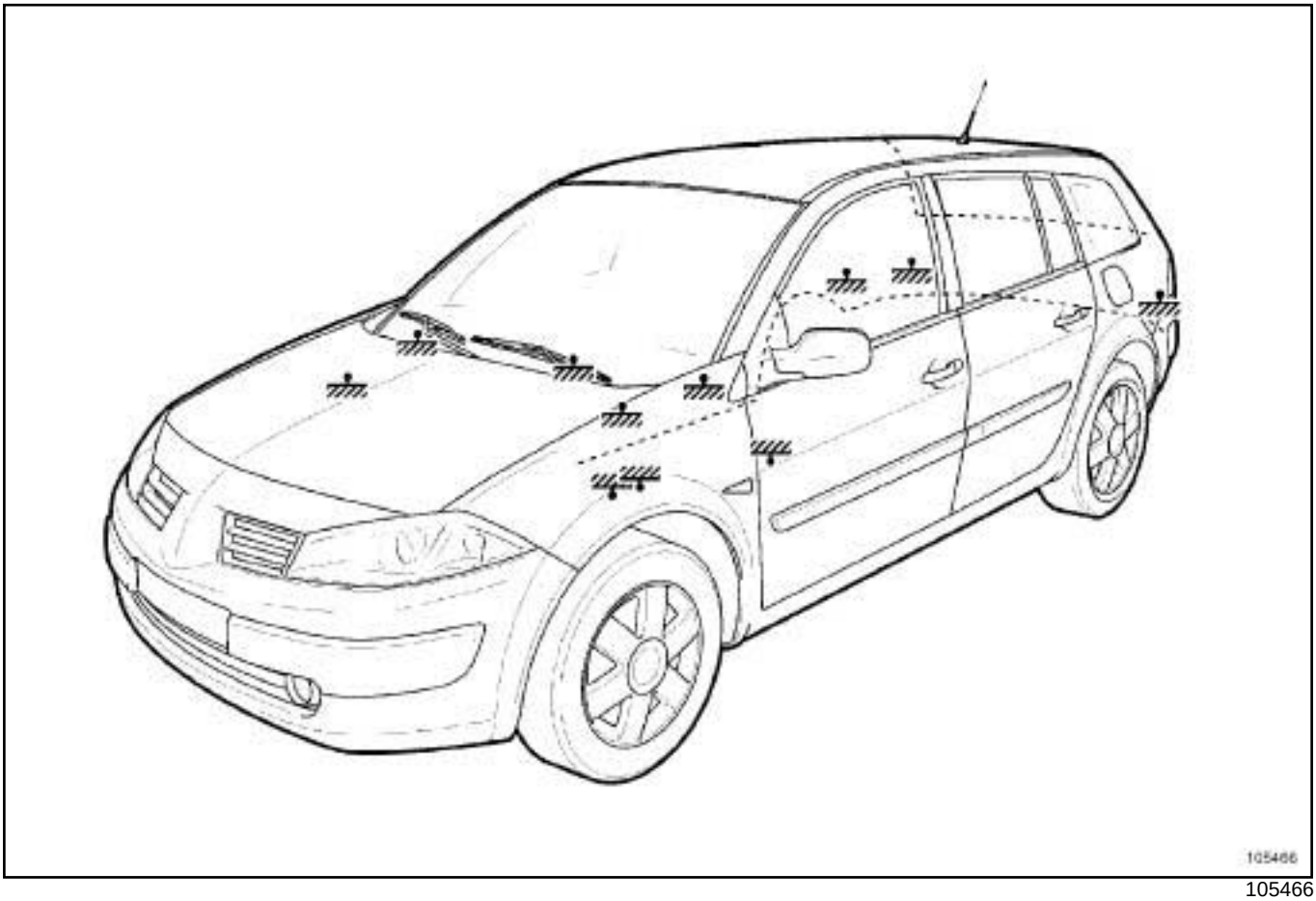

105466

SIDE STRUCTURE

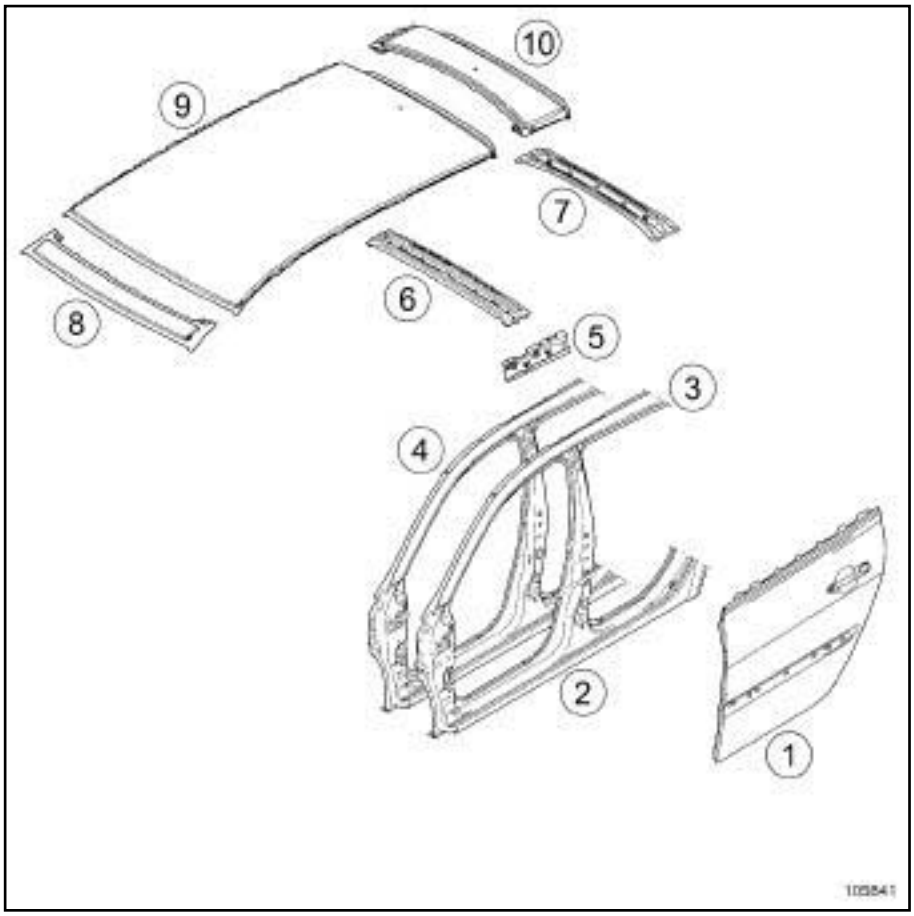

105841

(**1**) : rear door panel

(**2**) : Sill panel (**41C, Lower side structure, Rear door panel**)

(**3**) : Upper body (**43A, Upper side structure, Upper body**)

(**4**) : Body side front section

(**5**) : Rear roof drip moulding lining (**43A, Upper side structure, Rear roof drip moulding lining**)

(**6**) : Roof panel arch (**45A, Top of body, Roof panel arch**)

(**7**) : Roof rear cross member (**45A, Top of body, Roof rear cross member**)

(**8**) : Roof front section

(**9**) : Roof (**45A, Top of body, Roof**)

(**10**) : Rear section of roof (**45A, Top of body, Rear section of roof**)

REAR STRUCTURE

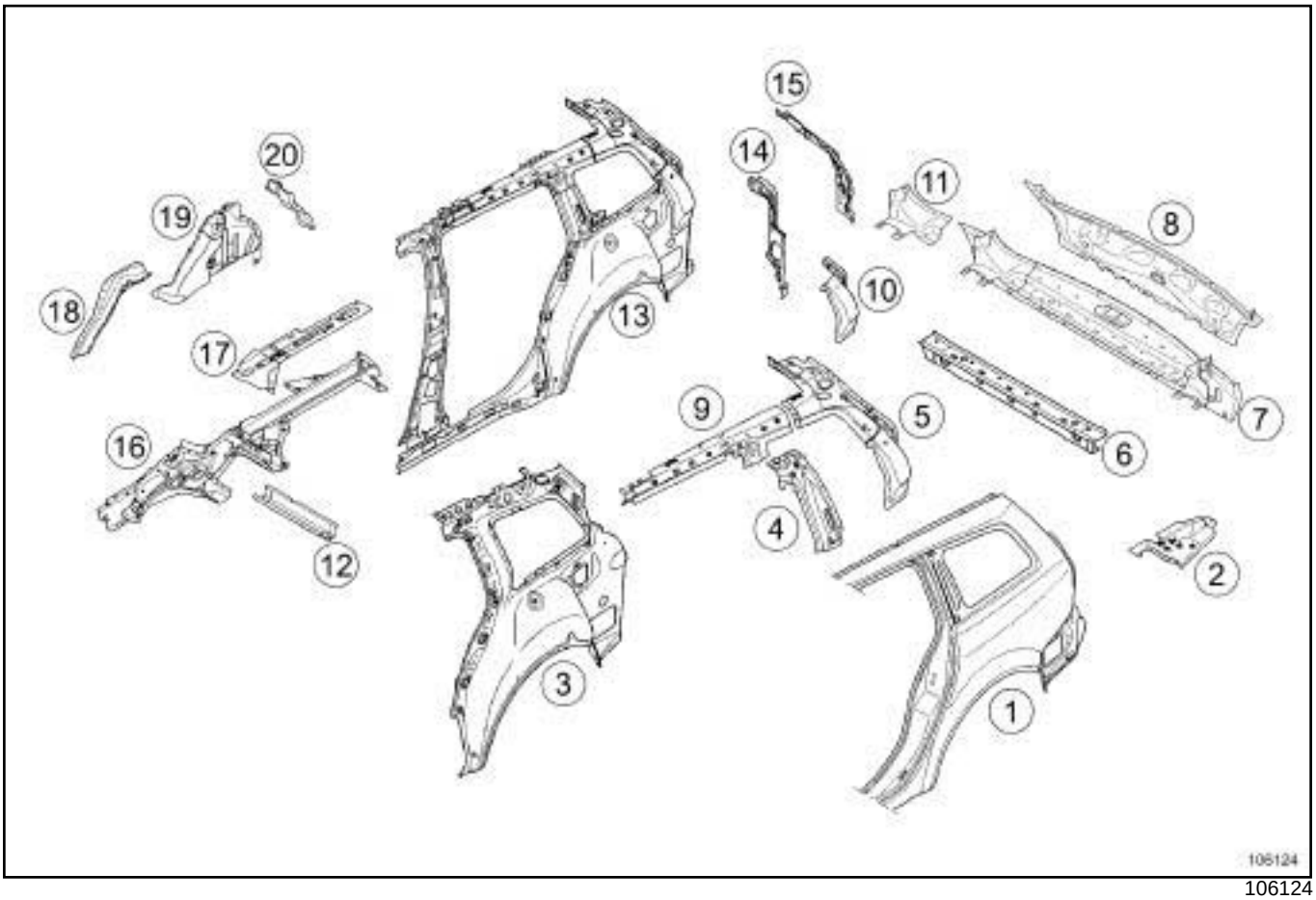

106124

(**1**) : Rear wing panel (**44A, Upper rear structure, Rear wing panel**)

(**2**) : Far rear lower cross member side section (**41D, Upper rear structure, Far rear lower cross member side section**)

(**3**) : Outer rear wheel arch (**44A, Upper rear structure, Outer rear wheel arch**)

(**4**) : Seatbelt reinforcement

(**5**) : Rear quarter upper reinforcement (**44A, Upper rear structure, Rear quarter upper reinforcement**)

(**6**) : Far rear lower cross member

(**7**) : Rear end panel assembly (**44A, Upper rear structure, Rear end panel assembly**)

(**8**) : Rear end panel (**44A, Upper rear structure, Rear end panel**)

(**9**) : Rear roof drip moulding reinforcement (**43A, Upper side structure, Rear roof drip moulding reinforcement**)

(**10**) : Light mounting lining (**44A, Upper rear structure, Light mounting lining**)

(**11**) : Rear quarter lining mounting

(**12**) : Rear floor centre cross member

(**13**) : Rear quarter lining (**44A, Upper rear structure, Rear quarter lining**)

(**14**) : Inner C-pillar (**44A, upper rear structure, Inner C-pillar**)

(**15**) : Rear light mounting (**44A, Upper rear structure, Rear light mounting**)

(**16**) : Rear side member (**41D, Upper rear structure, Rear side member**)

(**17**) : Rear side member closure panel, rear section

(**18**) : Rear wheel arch closure panel, front section (**44A, Upper rear structure, Rear wheel arch closure panel, front section**)

(**19**) : Inner rear wheel arch

(**20**) : Rear wheel arch closure panel, rear section(**44A, Upper rear structure, Rear wheel arch closure panel, rear section**)

REMINDER

All the relevant sections are indicated opposite each part, to make it easier and quicker to find and consult them.

REMOVABLE STRUCTURAL COMPONENTS

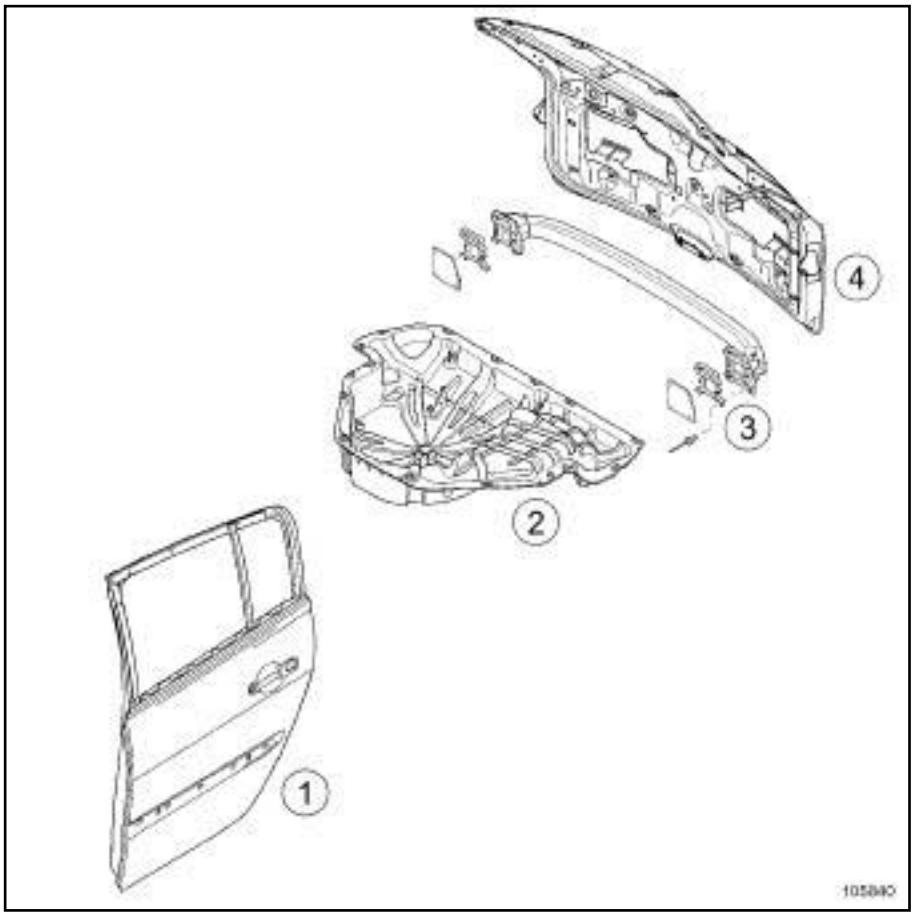

105840

(**1**) : Rear side door (see: **47A, Side doors, Rear side door**)

(**2**) : Rear floor rear section (see: **41D, Rear Lower structure, Rear floor rear section**

(**3**) : Rear impact cross member (see: **41D, Rear lower structure, Rear impact cross member**

(**4**) : Tailgate (see: **48A, Non-side doors, Tailgate**

The replacement of this part is a basic operation for a side impact.

WARNING

The information which follows concerns only the descriptions and connections which are specific to the part concerned.

The information on the additional parts will be dealt with in the appropriate sections.

Note:

In order to carry out this operation, order expanding inserts.

The positions of the cuts given in the procedure can be modified according to the severity of impact.

Replacement is made by combining cuts (a, b, and c).

WARNING

If the spot welds cannot be made as they were originally using an electrical spot welding machine, these should be replaced with plug welds after holes have been drilled in the first panel.

I - COMPOSITION OF THE SPARE PART

Assembled part, with:

- Rear jacking point
- Front jacking point

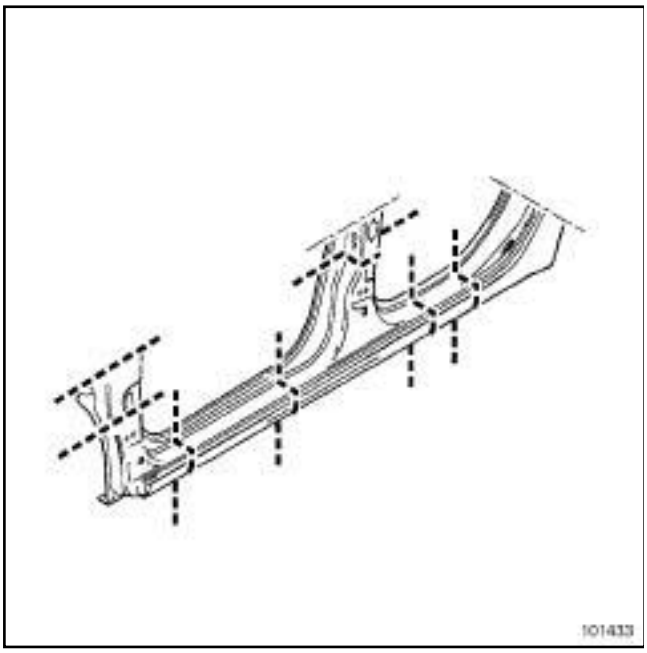

101433

PARTS CONCERNED (thickness in mm):

1 Sill panel 0.9

2 Front jacking point mounting 1.8

3 Rear jacking point mounting 1.8

Order the inserts according to the cuts selected.

II - VIEW OF THE POSITION OF THE EXPANDING INSERTS

A-pillar

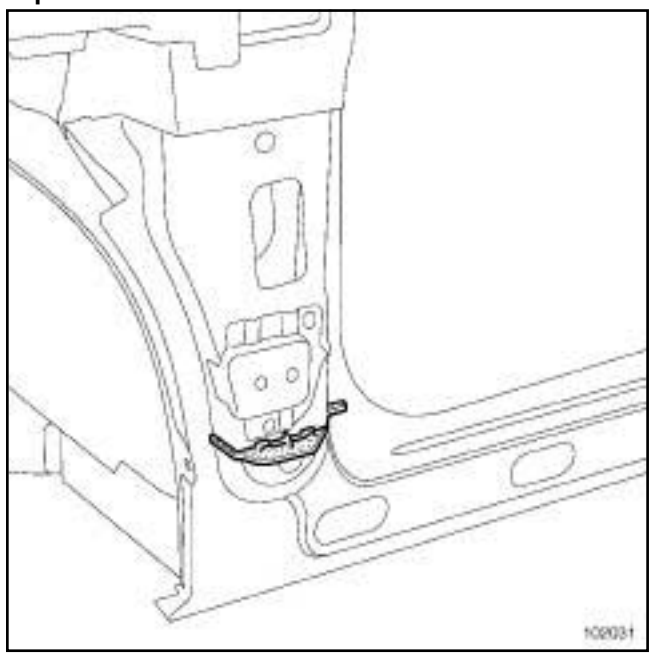

102031

B-pillar

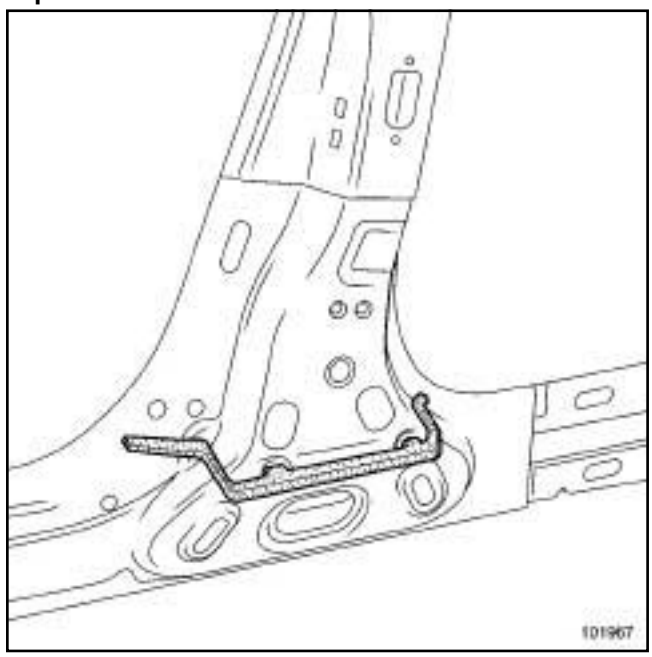

101967

Detail of the cut on A-pillar

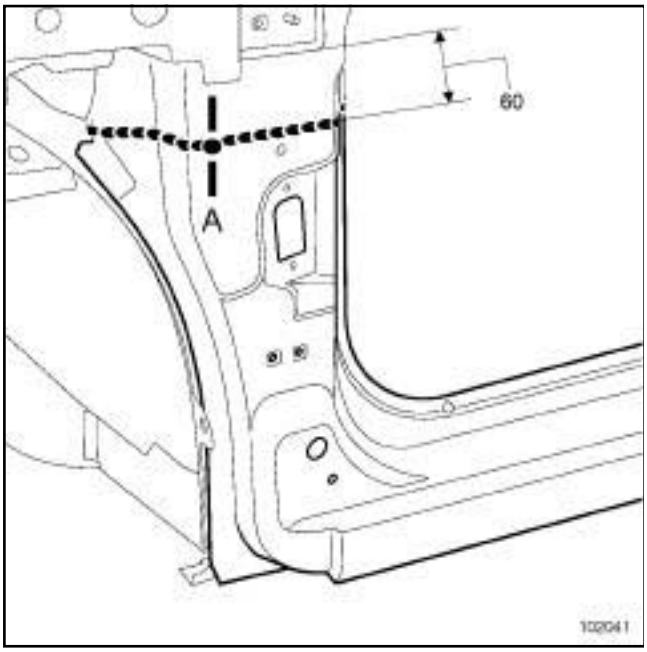

102041

Upper cut (A).

WARNING

Beyond this limit, complete coverage by the replacement part is not guaranteed.

102030

Lower cut (B).

Note:

Make the cut (B) below this limit to avoid cutting the expanding insert.

Details of the cut under the door

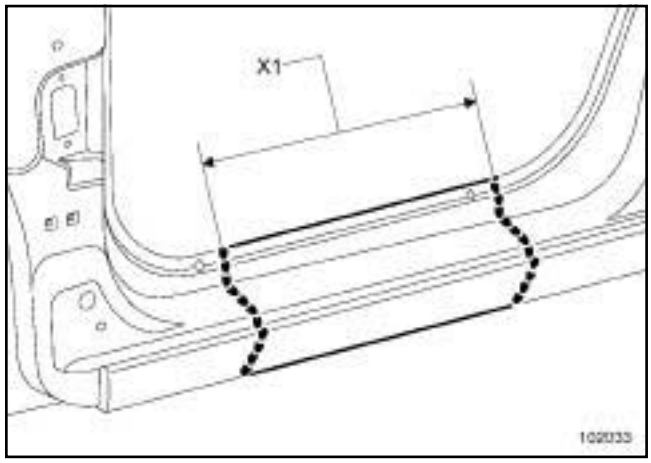

102033

Note:

Make a partial replacement in the area **X1** for a localised impact the cut is made in front of the jacking point.

This procedure can also be carried out underneath the rear side door.

Detail of the B-pillar cut

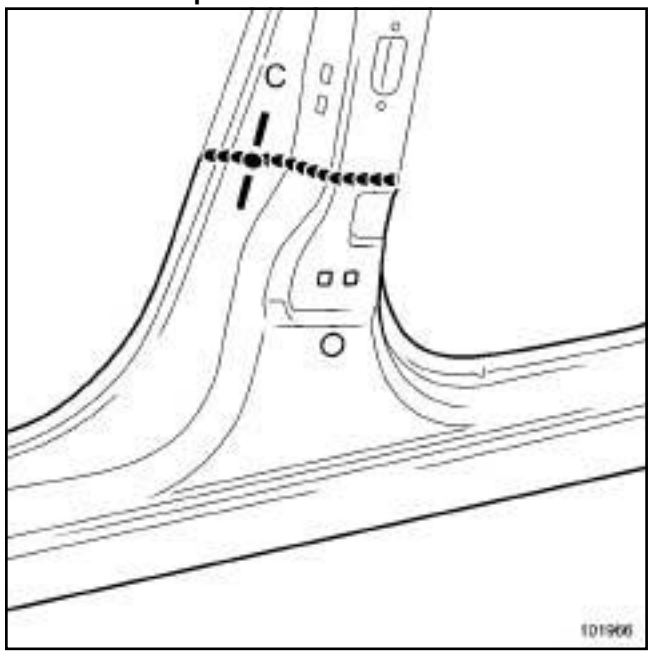

101966

WARNING

When performing the cutting operation, protect the B-pillar reinforcement and the lining.

WARNING

Do not make the cut beyond this limit to avoid damaging the expanding insert during welding.

Detail of the rear cut

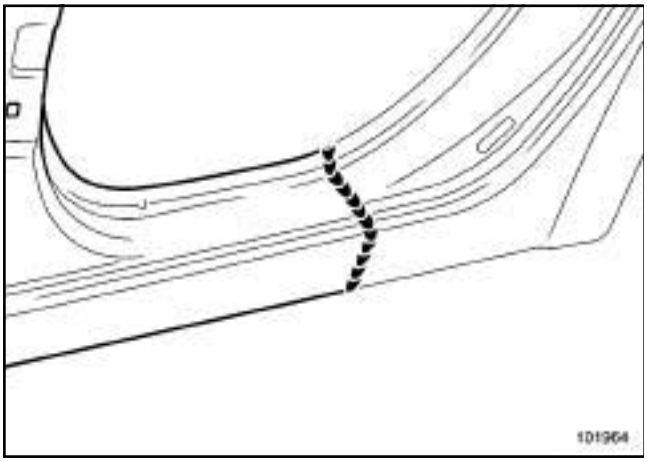

101964

WARNING

Avoid making the cut beyond this limit as the impact absorber unit and the expanding insert may be damaged.

EXAMPLE OF CUT COMBINATIONS

Partial replacement of front using cuts (1 , 2)

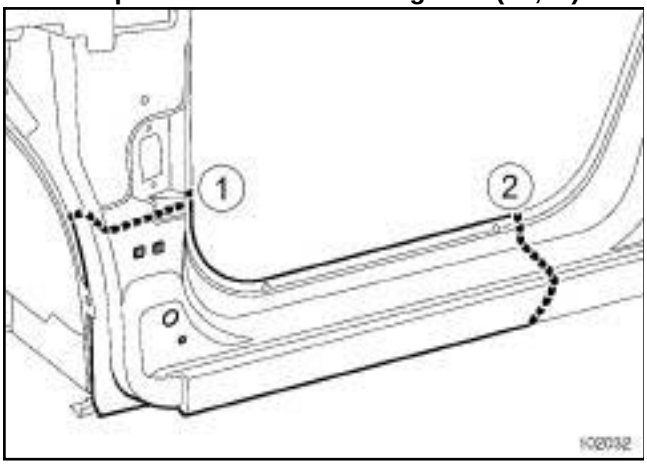

102032

Partial replacement below front door using cuts (3 , 4)

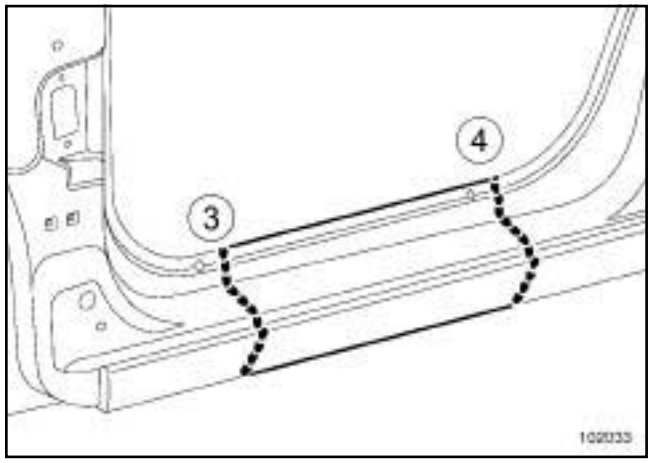

102033

Note:

This procedure can also be carried out underneath the rear side door.

Partial rear replacement using cuts (5 , 6 , 7)

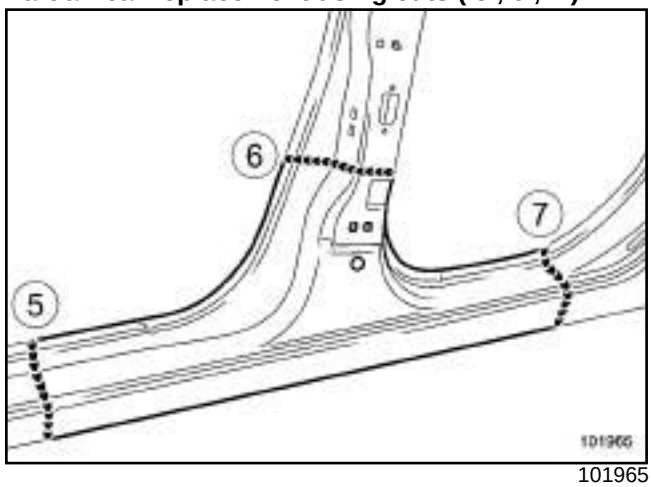

101965

WARNING

When making the cut, protect the B-pillar reinforcement at (**6**) .

Rear inner sill panel: Description

The replacement of this part is linked to the replacement of the sill panel rear reinforcement.

The options for replacing this part are as follows:

- complete: additional operation to the partial replacement of the lower rear wheel arch and the partial replacement of the B-pillar reinforcement (specific cuts for this operation),
- partial: at the rear section along cut (A) in addition to the partial replacement of the lower rear wheel arch (specific cut for this operation).

WARNING

If the spot welds cannot be made as they were originally using an electrical spot welding machine, these should be replaced with plug welds after holes have been drilled in the first panel.

COMPOSITION OF THE REPLACEMENT PART

Part supplied on its own

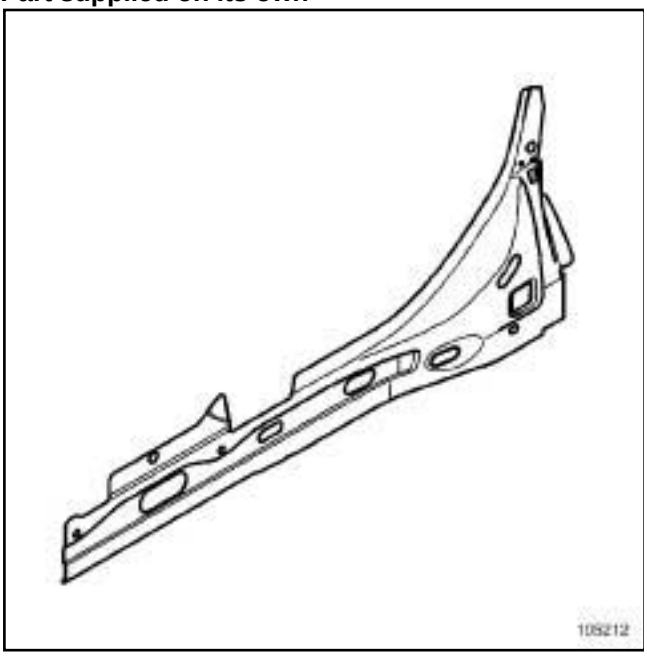

105212

Pieces concernées (épaisseur en mm) :

- **1** Rear inner sill panel 1
- **2** Body side reinforcement front ring 1.2
- **3** Rear quarter lining 0.7
- **4** Centre floor side section 1.2
- **5** Rear sill panel reinforcement 1.4
- **6** B-pillar lower lining 0.7

Part in position

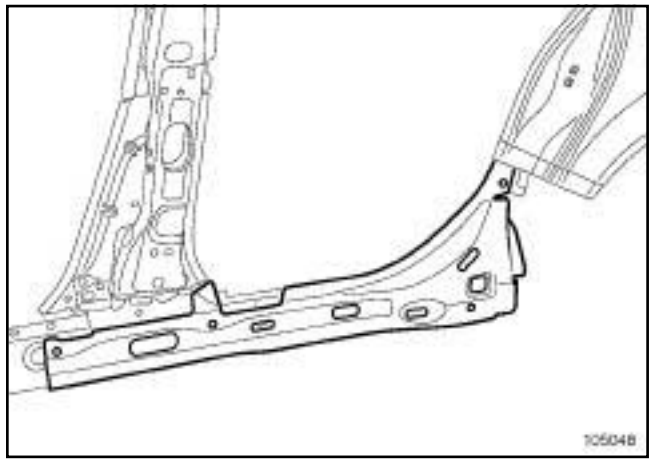

105048

Special note on the replacement of the rear inner sill panel

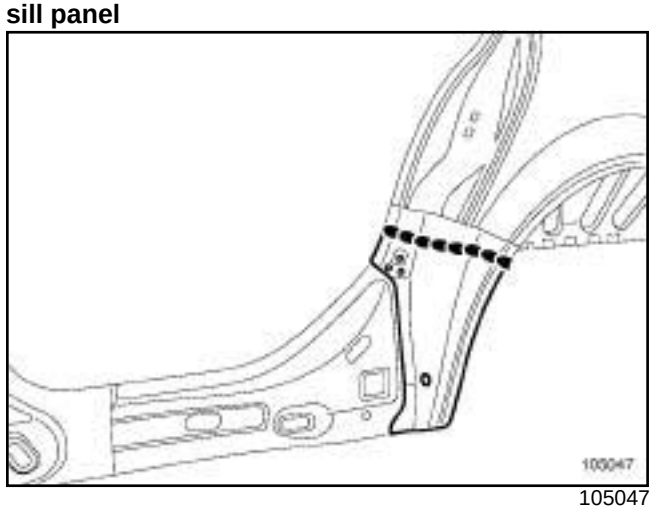

105047

Note:

Make a cut on the outer rear wheel arch to unweld the rear inner sill panel.

Detailed view of cut (a)

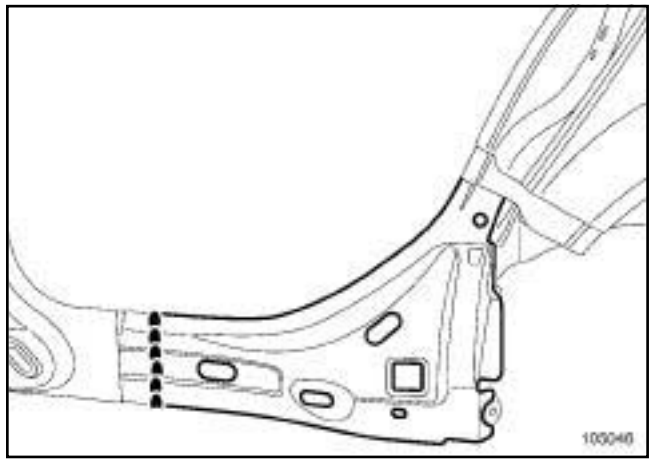

105046

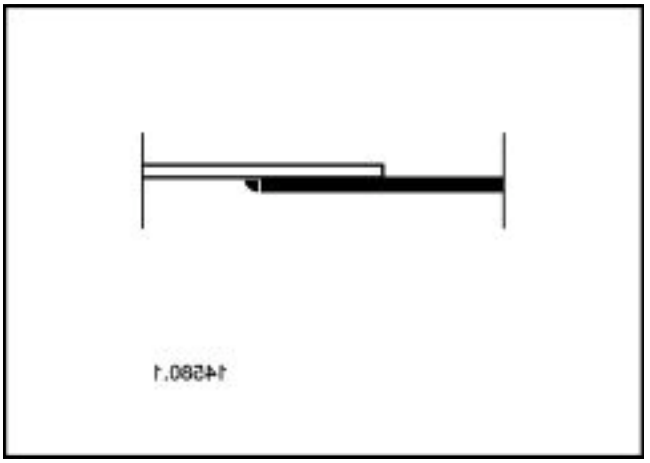

14580-1

Tightening torques ▽	
floor mounting bolts	**21 Nm**

Note:

The replacement of this part is a supplementary operation to the replacement of the end panel for a rear impact, the part should be removed and refitted in the event of a fault (e.g. a leak).

It is a removable component made from sheet-moulded compound polyester composite material (SMC).

In the procedure described below, you will find details of the operations to be carried out for a complete replacement.

For the bonding zones, use preformed sealant mastic (part no.: **77 01 423 330**).

Information on any additional parts will be provided in the respective sections (see contents).

I - REPAIR

For repairs to the external panel and box see (**MR 502**).

II - COMPOSITION OF THE SPARE PART

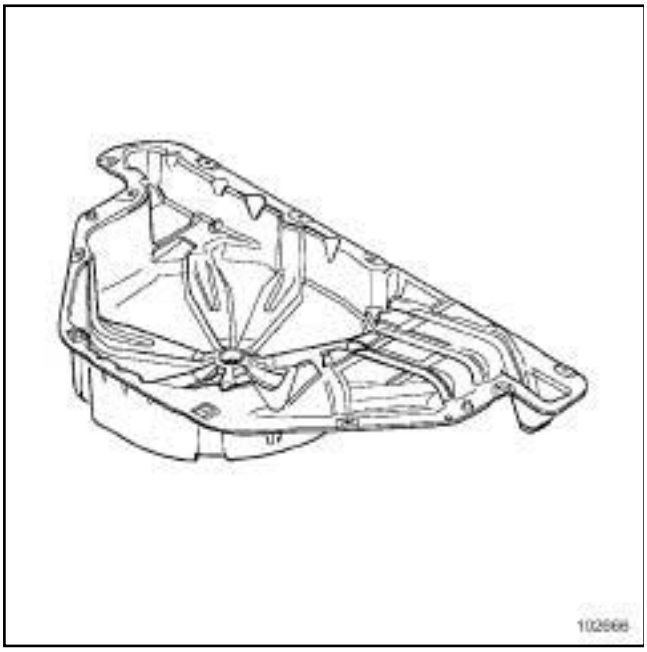

102666

Part supplied on its own.

III - REMOVAL PREPARATION OPERATION

Position the vehicle on a two-post lift (see **02A, Lifting equipment, Underbody lift**).

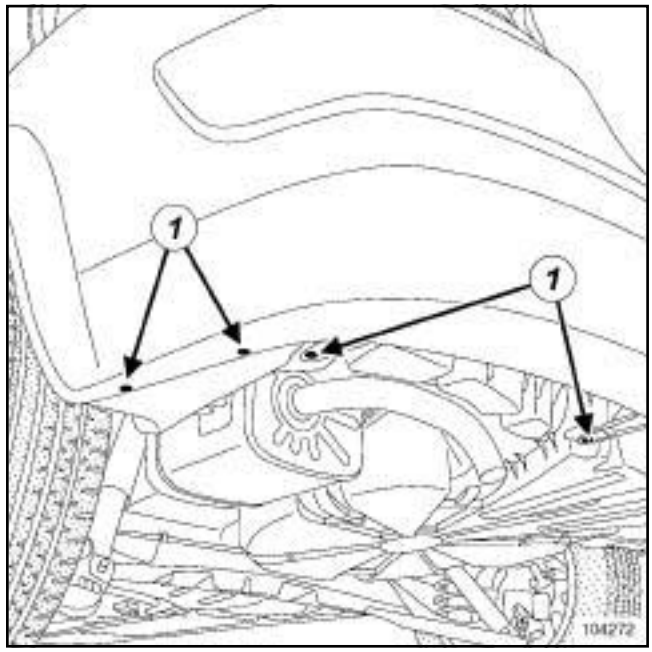

104272

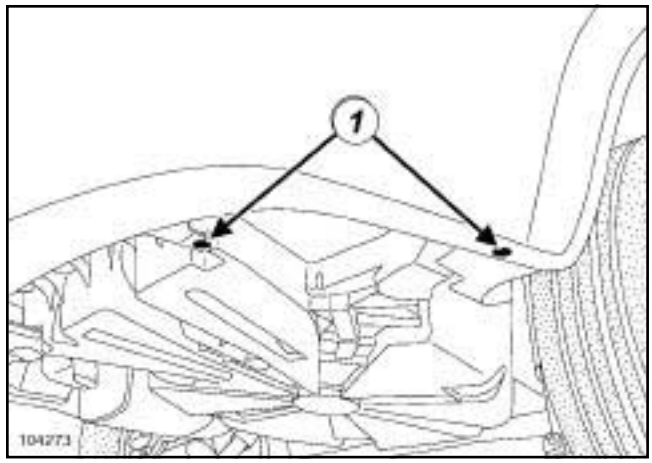

104273

Remove the lower bolts (**1**) .

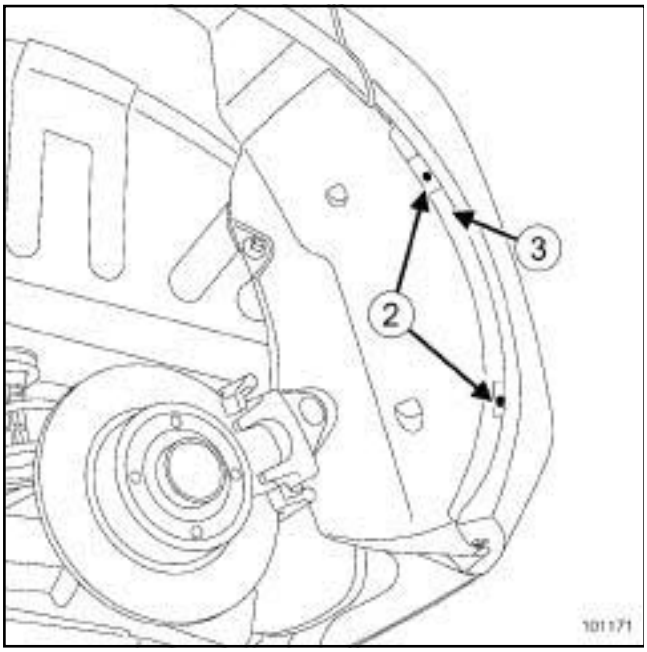

101171

Remove the bolts (**2**) .

Move the wheel arch liner to one side.

Remove the bumper mounting bolt (**3**) .

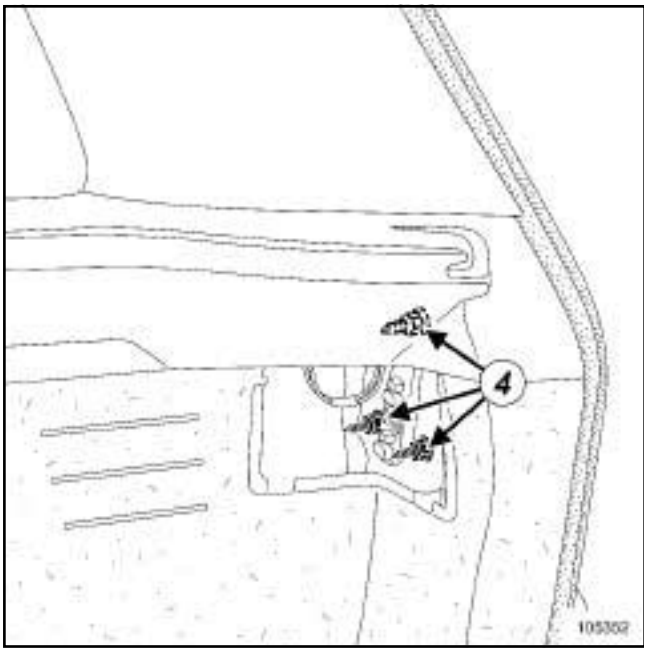

105352

Disconnect the rear light connector.

Remove:

- the nuts (**4**) ,
- the rear lights.

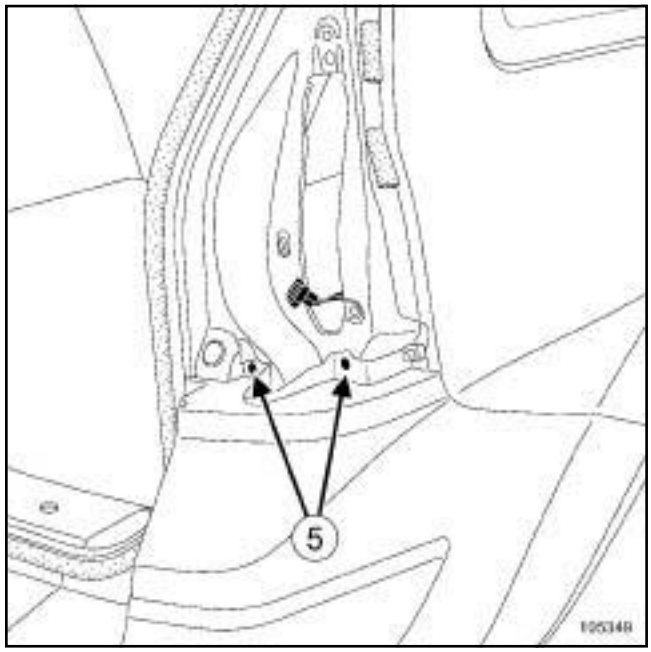

105349

Remove the bolts (**5**) .

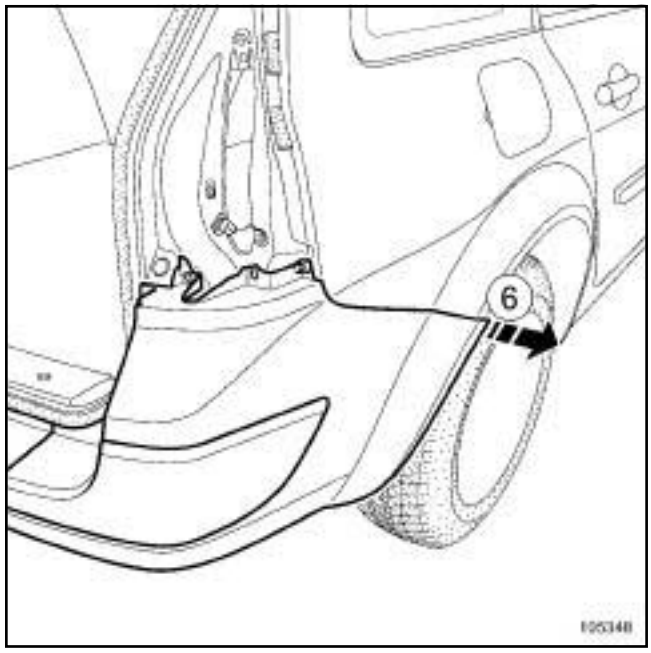

105348

Unclip the bumper at the side section (**6**) .

Remove the bumper (this operation requires two people).

Remove:

- the luggage compartment carpet,
- the emergency spare wheel and the jack.

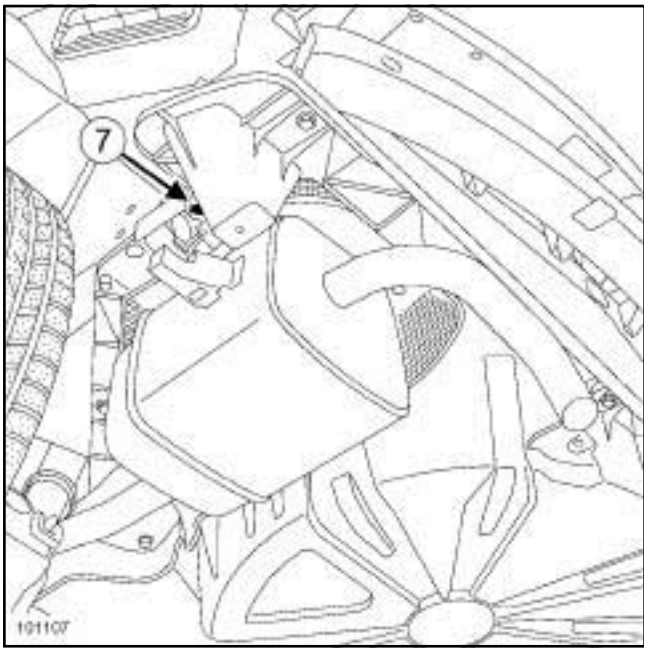

101107

Remove the mounting bolt (**7**) and lower the silencer.

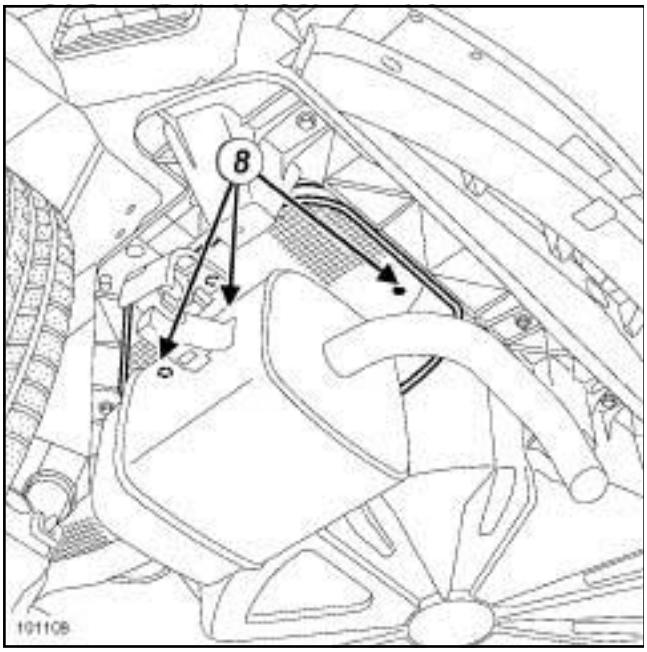

101108

Remove the heat shield mounting bolts (**8**) .

Remove the heat shield.

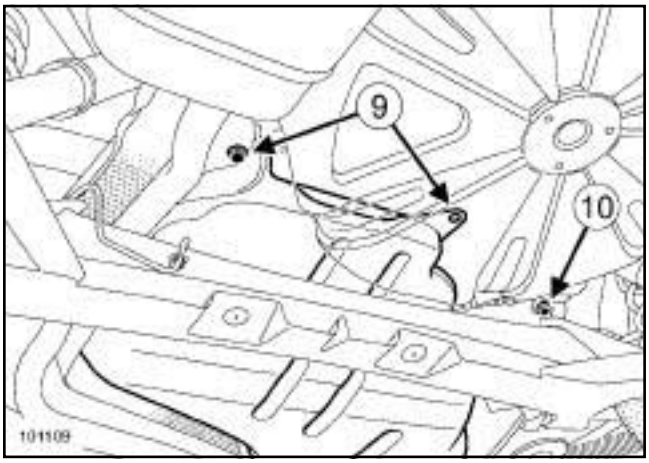

101109

Remove:

- the fuel tank mounting bolts (**9**) ,
- the funnel lower mounting bolt (**10**) .

IV - OPERATION FOR REMOVAL OF PART CONCERNED

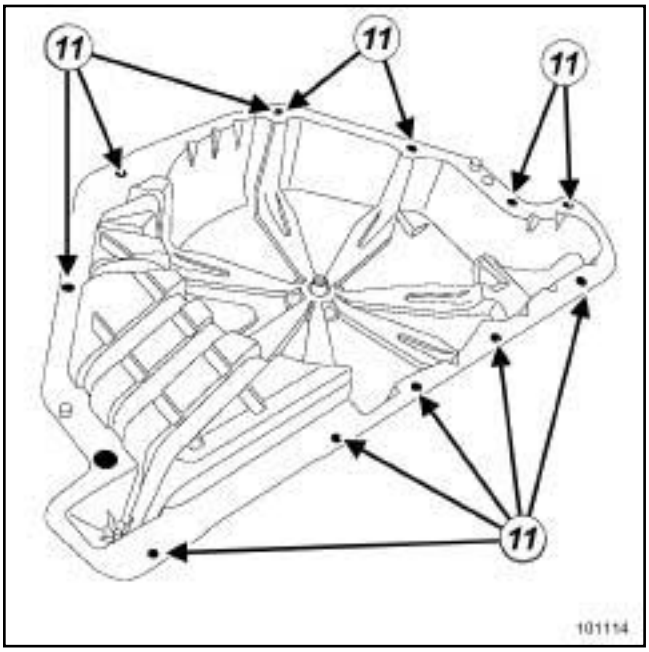

101114

Remove the floor mounting bolts (**11**) .

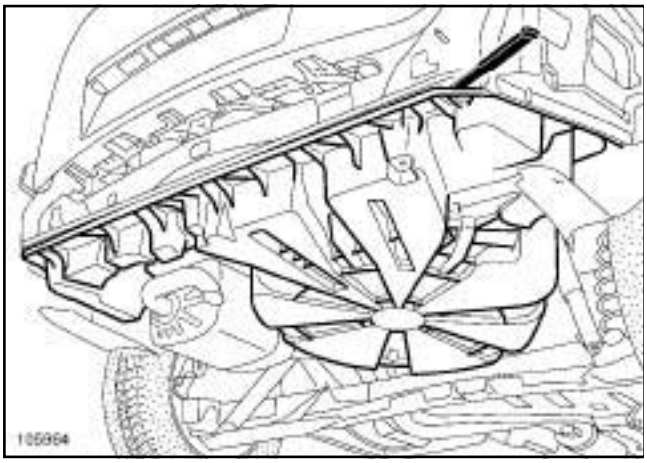

105964

Insert a flat chisel into the rear right-hand corner of the floor.

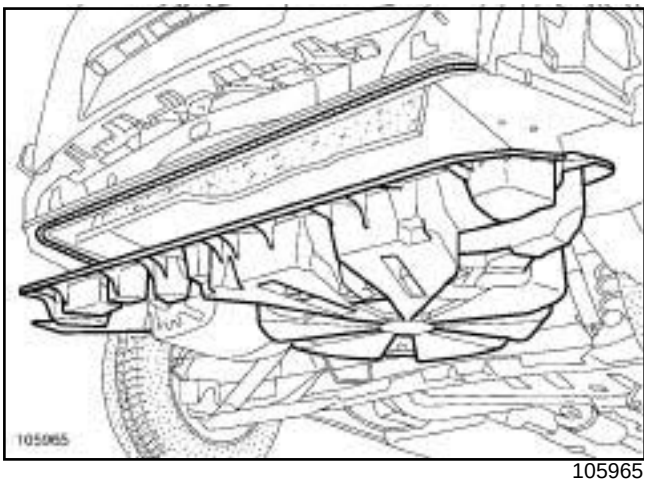

105965

Using the flat chisel carefully lever off the floor.

REFITTING

I - REFITTING PREPARATION OPERATION

Preparation of the replacement part

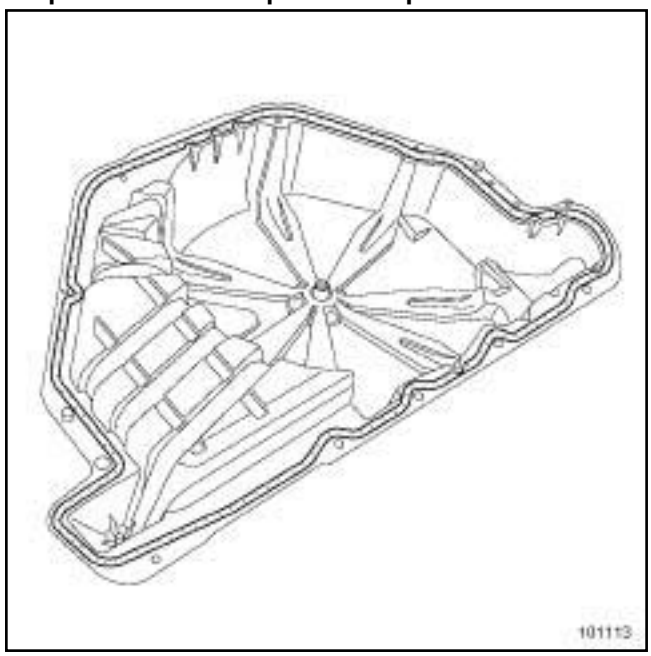

101113

Remove the remaining cement bead.

Using a lint free cloth, clean the surfaces to be bonded with heptane.

Apply the sealant mastic as shown in the diagram.

Preparing the vehicle

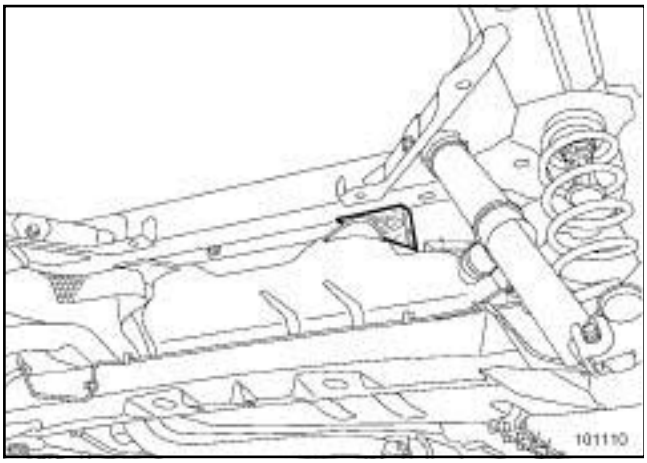

101110

Remove the remaining cement bead.

Using a lint free cloth, clean the surfaces to be bonded with heptane.

> Note:
>
> To avoid any damage to the mastic bead and to facilitate the positioning of the floor when it is refitted, keep the tank away using a wooden block.

II - REFITTING OPERATION FOR PART CONCERNED

Refit the rear floor rear section (this operation requires two people).

Torque tighten the **floor mounting bolts (21 Nm)** .

> Note:
>
> Remove any visible excess mastic from the vehicle interior and exterior.

III - FINAL OPERATION

Refit:

- the fuel tank mounting bolts,
- the funnel lower mounting bolt,
- the heat shield,
- the heat shield mounting bolts,
- the silencer,
- the emergency spare wheel and the jack.
- the luggage compartment carpet,
- the rear bumper (this operation requires two people).

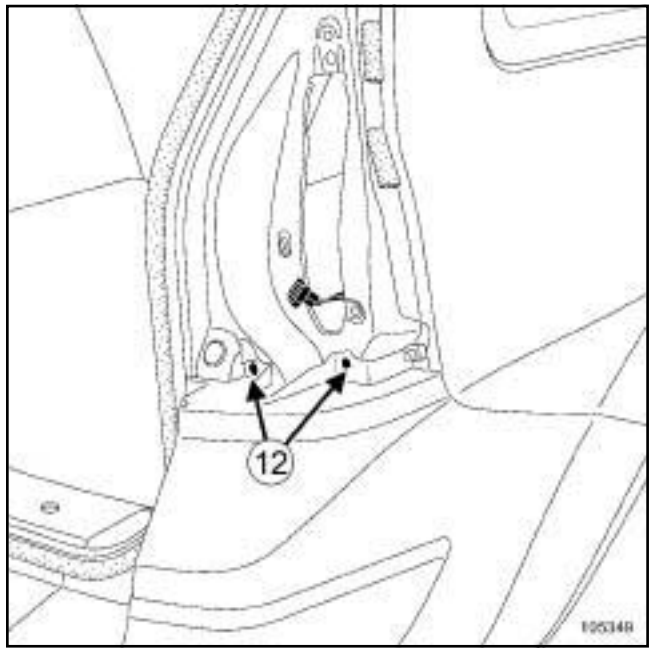

105349

Remove:

- the bolts (**12**) ,
- the rear lights,
- the bumper mounting bolts,
- the wheel arch covers.

Check that the seal between the floor and subframe is sufficient.

Rear side member: Description

The replacement of this part is a supplementary operation to the partial replacement of the rear section of the rear floor following a rear impact.

In the procedure described below, you will find only the descriptions and connections which are specific to the part concerned.

Information on any additional parts will be provided in the respective sections (see contents).

WARNING

If the spot welds cannot be made as they were originally using an electrical spot welding machine, these should be replaced with plug welds after holes have been drilled in the first panel.

The body jig bench must be used.

COMPOSITION OF THE SPARE PART

Part supplied with:

- Rear side member
- Bare rear side member-impact cross member connecting component
- Rear side member-rear cross member mounting connecting component
- Rear cross member-rear side member connecting component
- Rear side member connecting component rear reinforcement
- Rear end lower cross member
- Rear side member reinforcement
- Rear side member unit reinforcement connecting component
- Rear axle assembly unit
- Rear axle mounting reinforcement
- Rear axle mounting support
- Rear sill lining
- Rear sill lining reinforcement
- Rear sill
- Rear cross member-rear side member connecting component
- Rear side member-rear cross member connecting component reinforcement
- Rear cups
- Rear shock absorber mounting cup
- Rear shock absorber mounting reinforcement.

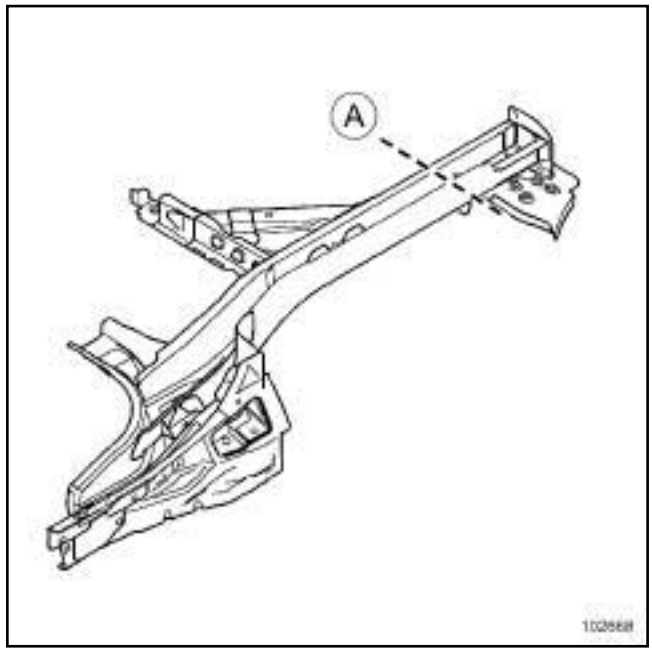

102668

PARTS CONCERNED (thickness in mm):

1 Rear inner sill panel 1

2 Quarter panel lining 0.7

3 Inner rear wheel arch 0.7

4 Rear side member closure panel component 0.7

5 Quarter panel lining lower section mounting 0.6

6 Rear cross member 0.7

7 Centre cross member 1

8 Rear axle cross member 1.2

9 Rear floor front section 0.7

10 Seat hinge side mounting reinforcement member 1.65

11 Bead reinforcement 0.9

12 Rear inner wheel arch extension 0.7

PART IN POSITION

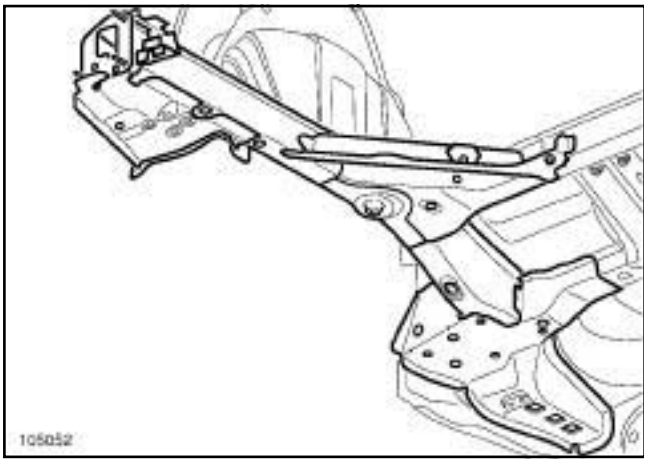

105052

Complete replacement

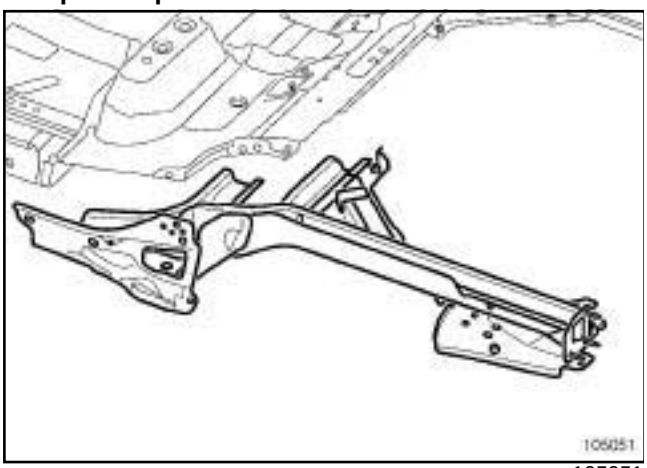

105051

Detailed view of cut A

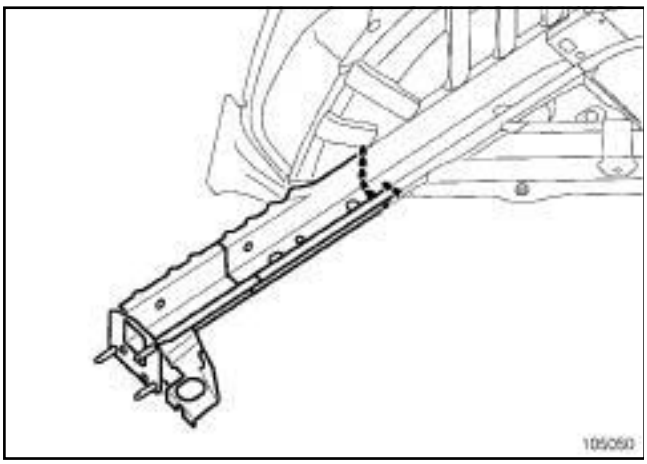

105050

Note:

If the impact prevents the side member from being cut at the point shown below, remove the connecting bracket **B** from the replacement part and weld it in area **X1** on the side member (shown below).

The cutting procedure remains the same as the previous cut.

WARNING

On the left-hand side, the cut is made on the original butt welding line.

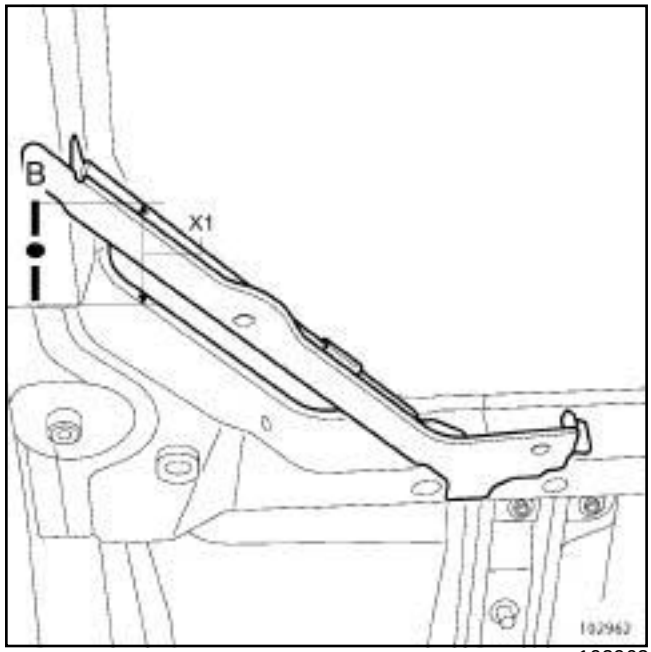

102962

this part may only be replaced in one way:

The complete replacement is a supplementary operation to the replacement of the rear end panel assembly.

COMPOSITION OF THE SPARE PART

Part supplied on its own

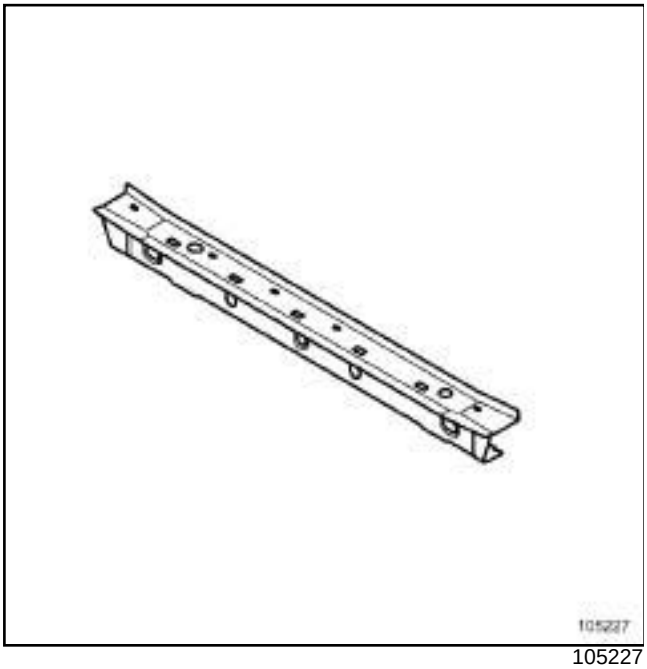

105227

PARTS CONCERNED (thickness in mm):

1 Far rear lower cross member 0.7

2 Far rear lower cross member mounting 0.7

Complete replacement

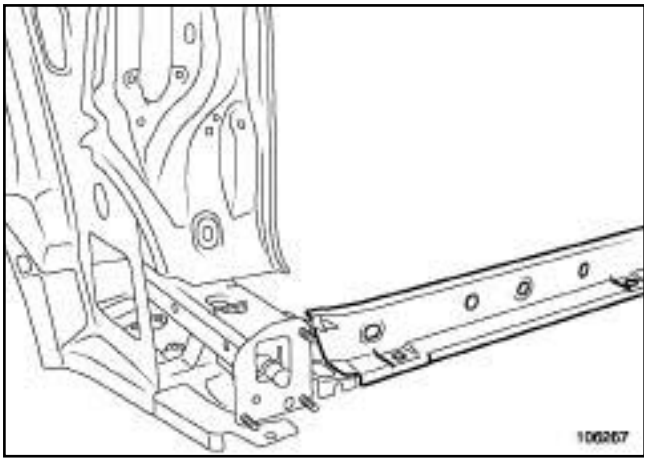

106267

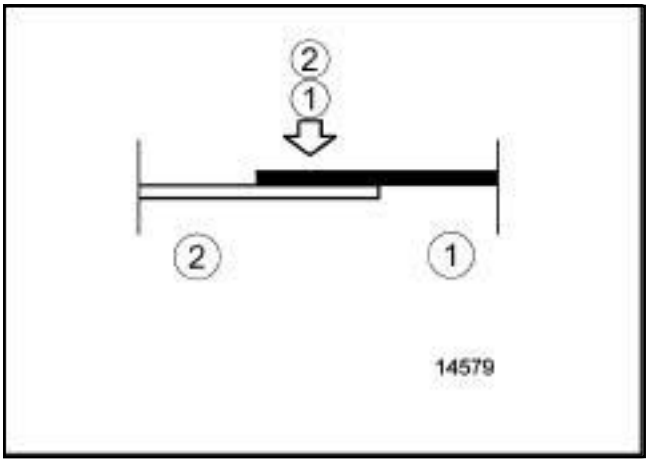

14579

Far rear lower cross member, side section: Description

The replacement of this part is an additional operation to the replacement of the rear end panel assembly.

In the procedure described below, you will find only the descriptions and connections which are specific to the part concerned.

Information on any additional parts will be provided in the respective sections (see contents).

WARNING

If the spot welds cannot be made as they were originally using an electrical spot welding machine, these should be replaced with plug welds after holes have been drilled in the first panel.

COMPOSITION OF THE REPLACEMENT PART

Part supplied with:

- Crimped nut M8

102645

PARTS CONCERNED (thickness in mm):

1 Far rear lower cross member 1

2 Rear quarter lining 0.7

3 Rear inner wheel arch extension 0.7

4 Rear side member 2

5 End panel lining 0.8

6 Rear side member reinforcement 1.5

PART IN POSITION

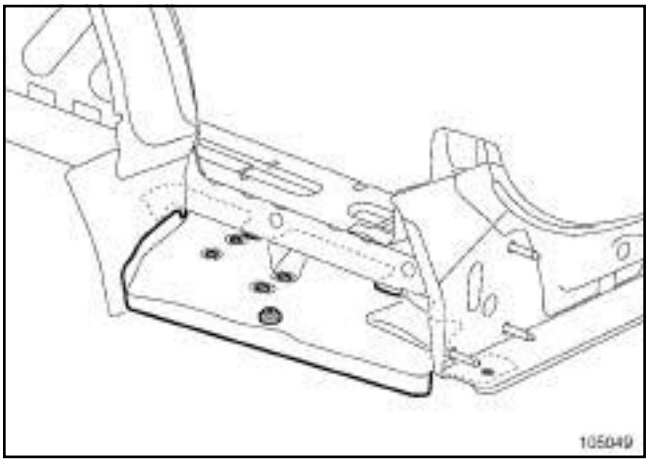

105049

Tightening torques ▽	
mounting unit mounting bolts	**35 Nm**
cross member fixing bolts	**21 Nm**

Note:

The replacement of this part is a basic operation for a rear impact.

It is a removable aluminium structural component.

In the procedure described below, you will find only the descriptions and connections which are specific to the part concerned.

Information on any supplementary parts will be provided in the respective sections (see contents).

REMOVAL

I - COMPOSITION OF THE SPARE PART

Assembled part, with:

- Rear end cross member,
- Spacer,
- Side mounting units,
- Bolts,
- Nuts.

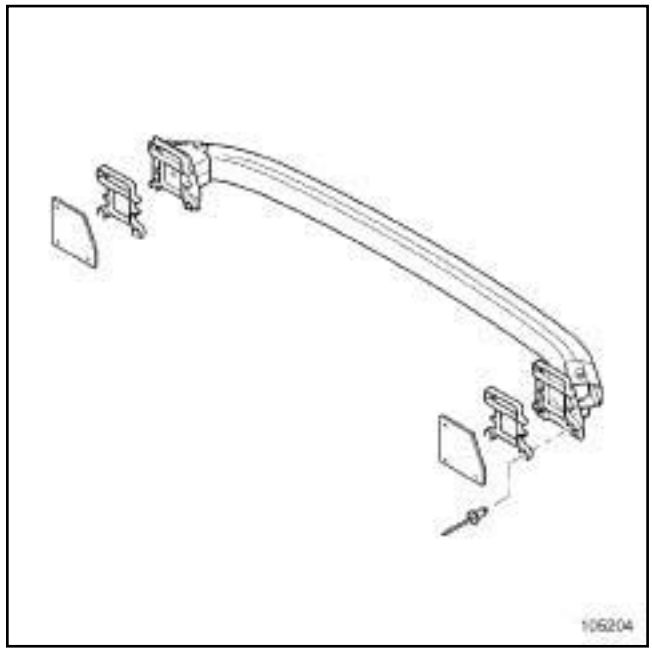

105204

Note:

The cross member contributes to the strength of the structure in the event of an impact. For this reason, it is essential to observe the correct tightening torque after any work on the cross member.

II - REMOVAL PREPARATION OPERATION

Remove:

- the front wheel arch liners (see **MR 365 Bodywork, 55A Exterior protection, Wheel arch liner: Removal - Refitting**),
- the rear bumper (see **MR 365 Bodywork, 55A Exterior protection, Rear bumper: Removal - Refitting**).

III - OPERATION FOR REMOVAL OF PART CONCERNED

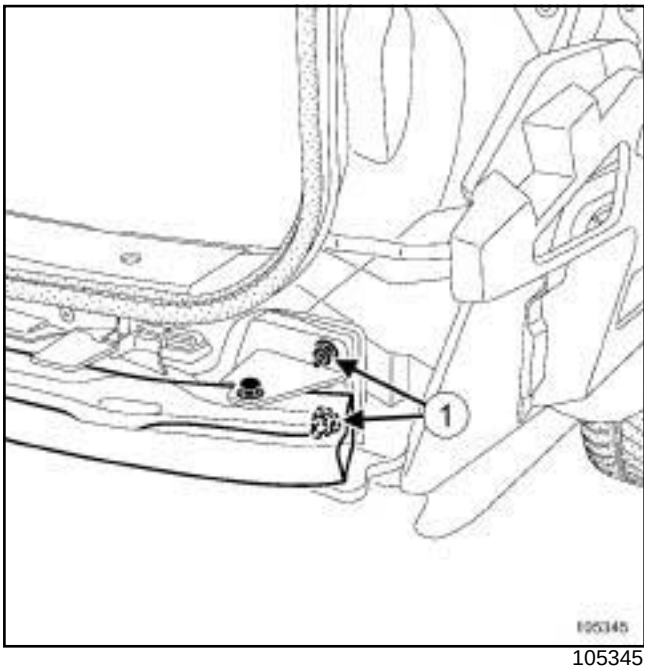

105345

Remove mounting nuts (**1**) .

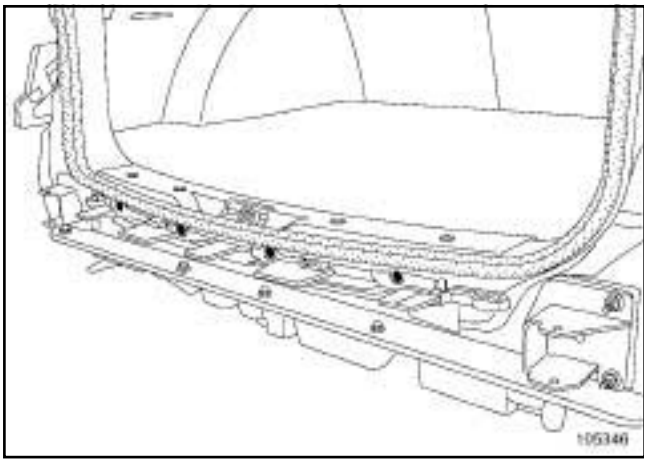

105346

Note:

Depending on the severity of the impact, it is possible to replace the cross member without removing the mounting units.

REFITTING

I - REFITTING PREPARATION OPERATION

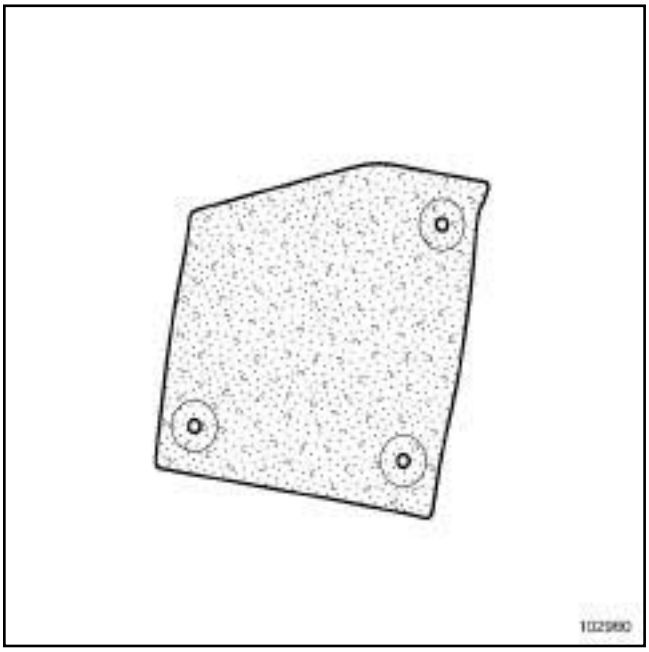

102960

Note:

After all interventions necessitating the removal of the mounting units, check the condition of the cross member foam and replace if necessary.

Torque tighten the **mounting unit mounting bolts (35 Nm)** .

II - REFITTING OPERATION FOR PART CONCERNED

Refit the rear impact cross member.

Torque tighten the **cross member fixing bolts (21 Nm)** .

III - FINAL OPERATION

Refit:

- the rear bumper (see **MR 365 Bodywork, 55A Exterior protection, Rear bumper: Removal - Refitting**),
- the front wheel arch liners (see **MR 365 Bodywork, 55A Exterior protection, Wheel arch liner: Removal - Refitting**).

The options for replacing this part are as follows:

- Complete: basic operation for a side impact,
- partial: with cuts (A), (B) and (C), basic operation for a side impact.

The combination of cuts will be selected according to the deformation (you will find examples at the end of the section).

In the procedure described below, you will find only the descriptions and connections which are specific to the part concerned.

Information on any supplementary parts will be provided in the respective sections (see contents).

WARNING

If the spot welds cannot be made as they were originally using an electrical spot welding machine, these should be replaced with plug welds after holes have been drilled in the first panel.

COMPOSITION OF THE REPLACEMENT PART

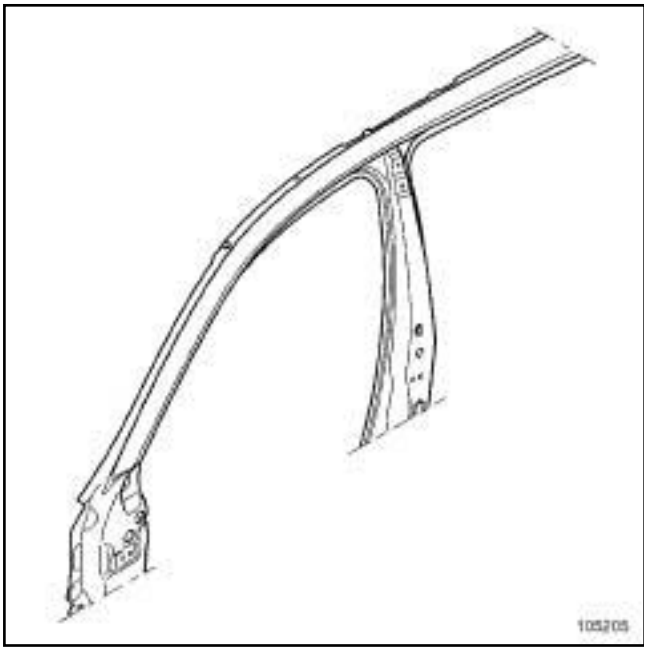

105205

Part supplied on its own.

PARTS CONCERNED (thickness in mm):

- **1** Upper body 0.9
- **2** Body side reinforcement front ring 1.2
- **3** B-pillar upper lining 1.5
- **4** Rear roof drip moulding reinforcement 1
- **5** Rear roof drip moulding lining 1

Detailed view of cut (a)

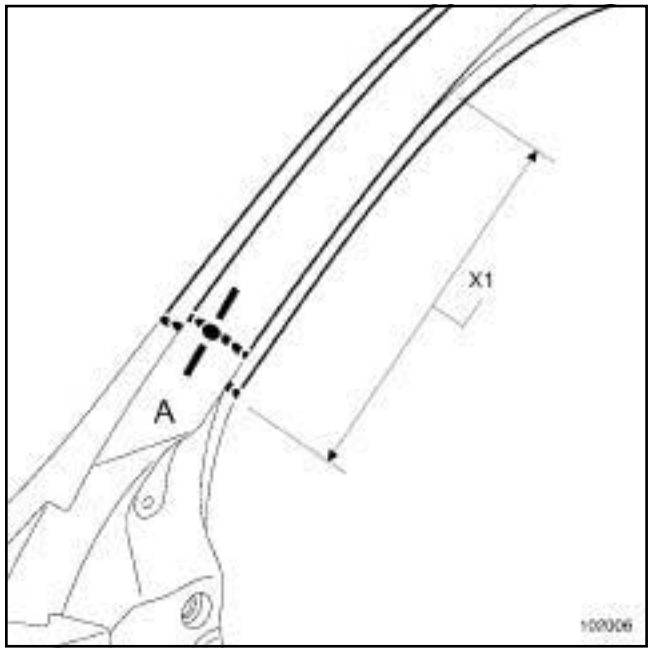

102006

Note:

Make cut (A) in zone (X1).

Do not make the cut on the position of the expanding insert.

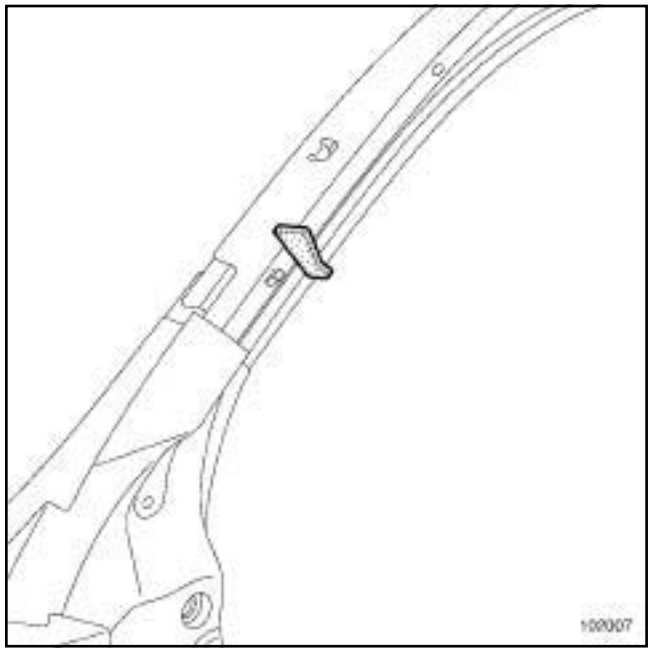

102007

A-pillar upper expanding insert (B).

Note:

The expanding inserts must be replaced.

Detailed view of cut (B)

104876

Note:
Make cut (B) in zone (X2).

Detail of cut (C)

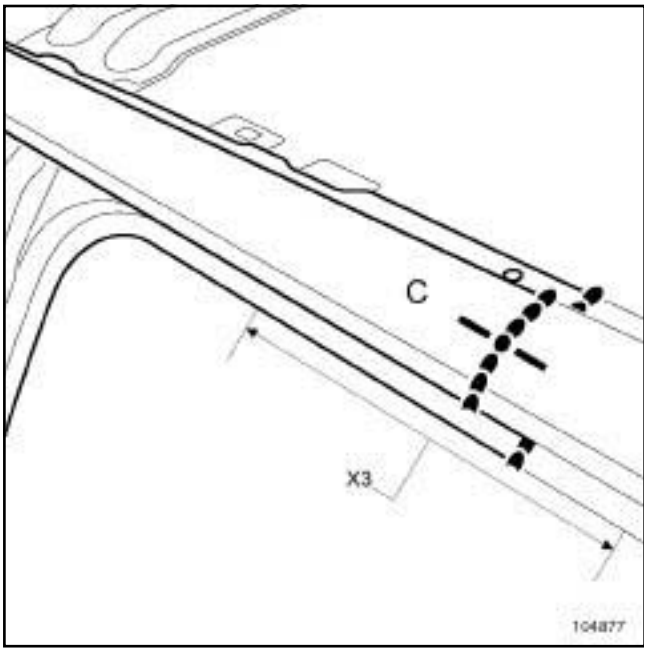

104877

Note:
Make cut (C) in zone (X3).

The replacement of this part is a supplementary operation to replacing the whole body side or upper-body for a side impact or overturning.

Information on any supplementary parts will be provided in the respective sections (see contents).

Note:

The operation presents no particular difficulties.

WARNING

If the spot welds cannot be made as they were originally using an electrical spot welding machine, these should be replaced with plug welds after holes have been drilled in the first panel.

COMPOSITION OF THE REPLACEMENT PART

105209

Part supplied assembled with captive nut M10

PARTS CONCERNED (thickness in mm):

- **1** Body side 0.7
- **2** Body side reinforcement front ring 1.2
- **3** Seatbelt reinforcement 1
- **4** Quarter panel rear reinforcement 1.2
- **5** Quarter panel lining 0.7
- **6** Rear roof drip moulding lining 1
- **7** B-pillar upper lining 1.5

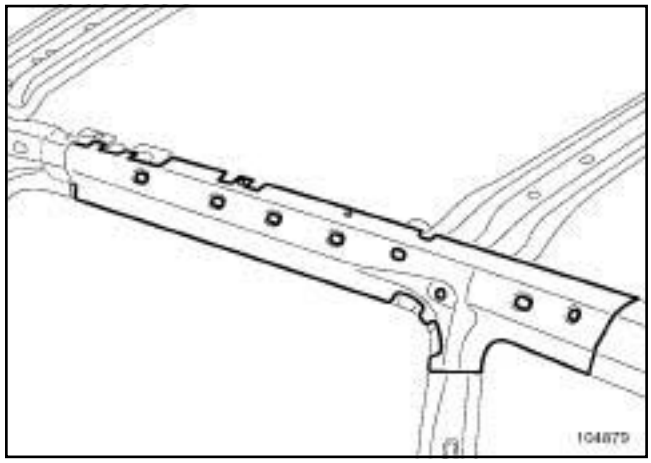

104879

Part in position

Roof drip moulding lining: Description

The replacement of this part is a supplementary operation to replacing the whole body side or upperbody for a side impact or overturning.

Information on any supplementary parts will be provided in the respective sections (see contents).

WARNING

If the spot welds cannot be made as they were originally using an electrical spot welding machine, these should be replaced with plug welds after holes have been drilled in the first panel.

COMPOSITION OF THE REPLACEMENT PART

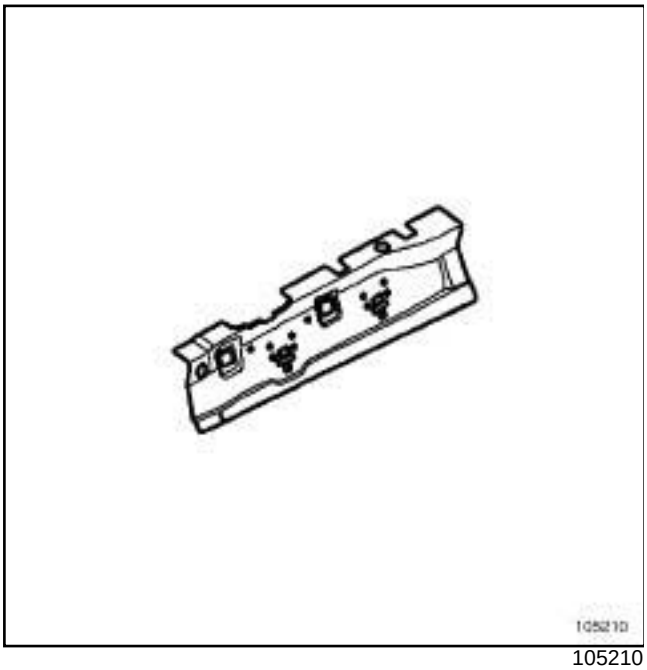

105210

Part supplied on its own.

Note:

The roof bar mounting housings should be protected during the operation.

PARTS CONCERNED (thickness in mm) :

- **1** Rear roof drip moulding lining 1
- **2** Rear roof drip moulding reinforcement 1
- **3** B-pillar upper lining 1.5
- **4** Quarter panel lining 0.7

PART IN POSITION

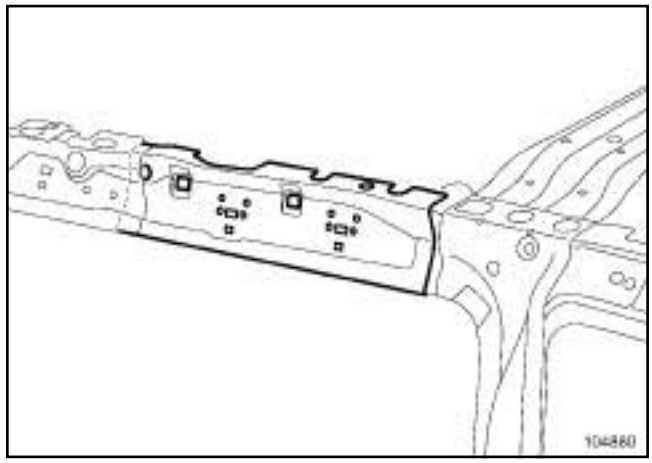

104880

Rear wing panel: Description

The replacement of this part is a basic operation for a rear side impact.

In the procedure described below, you will find only the descriptions and connections which are specific to the part concerned.

Information on any additional parts will be provided in the respective sections (see Contents).

several locations for cutting are possible:

- cut (A) requires removal of the roof,
- cuts (B), (D) and (E) avoid the need to reapply the sill panel anti-gravel protection or avoid having to remove the roof,
- cut (C) requires reapplying the anti-gravel protection.

The combination of cutting points are selected according to the damage.

WARNING

If the spot welds cannot be made as they were originally using an electrical spot welding machine, these should be replaced with plug welds after holes have been drilled in the first panel.

For the bonded sections, use a structural adhesive of type **MCT 514** (part no.: **77 11 172 674**).

WARNING

The wiring harness earths near the weld zone must be disconnected to avoid damaging the electrical and electronic components of the vehicle.

The welding machine earth must be placed as close as possible to the weld zone.

COMPOSITION OF THE REPLACEMENT PART

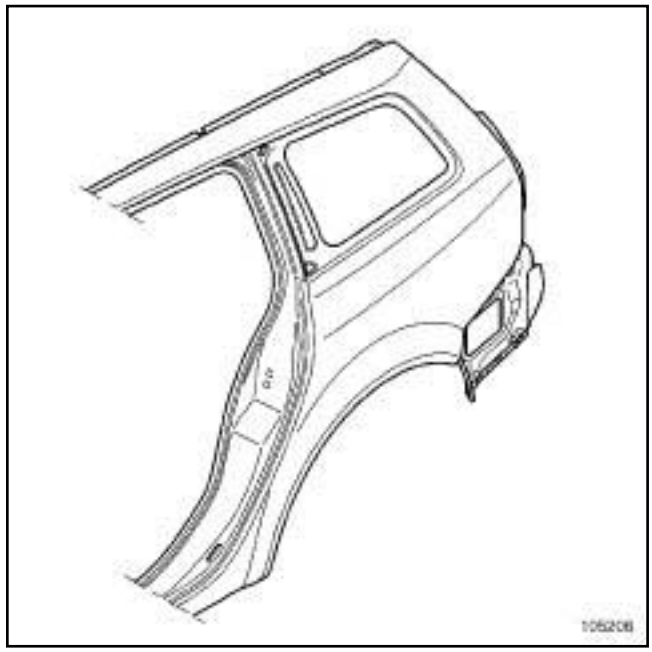

105206

Assembled part with door striker plate stiffener

PARTS CONCERNED (thickness in mm):

- **1** Rear wing panel 0.7
- **2** Rain channel 0.8
- **3** Lights support 0.8
- **4** Far rear lower cross member 1
- **5** C-pillar closure panel 0.7
- **6** Quarter panel lining 0.7
- **7** Interior quarter panel rear reinforcement 1.2
- **8** Rear roof drip moulding stiffener 1
- **9** Rear roof drip moulding lining 1
- **10** Shoulder harness reinforcement 1
- **11** Sill panel closure panel 1
- **12** Sill panel reinforcement 1.4

Order the expanding inserts according to the cuts selected:

- Left-hand side:

  Expanding insert in quarter panel lining area: **82 00 21 43 98**

  Expanding insert in quarter panel lining area: **82 00 17 61 52**

- Right-hand side:

  Expanding insert in quarter panel lining area: **82 00 26 27 36**

  Expanding insert in quarter panel lining area: **82 00 17 61 52**

COMPLETE REPLACEMENT

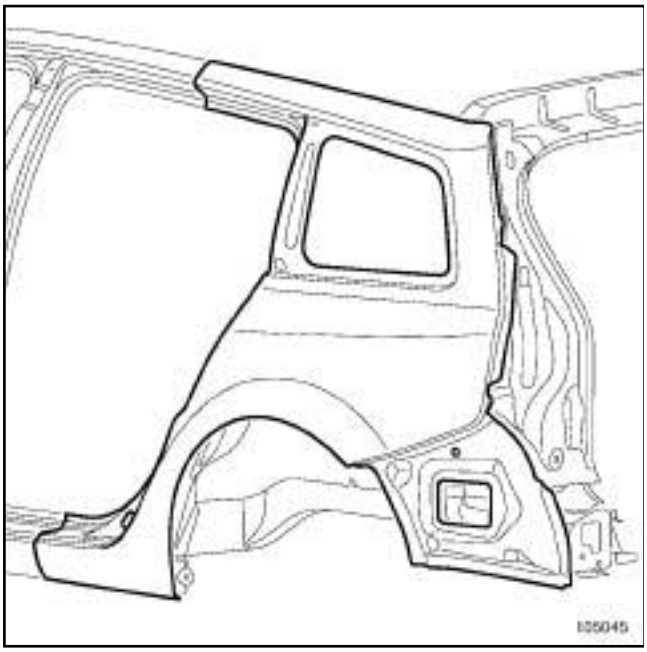

105045

Note:
The expanding inserts must be replaced.

Detailed view of the expanding insert position

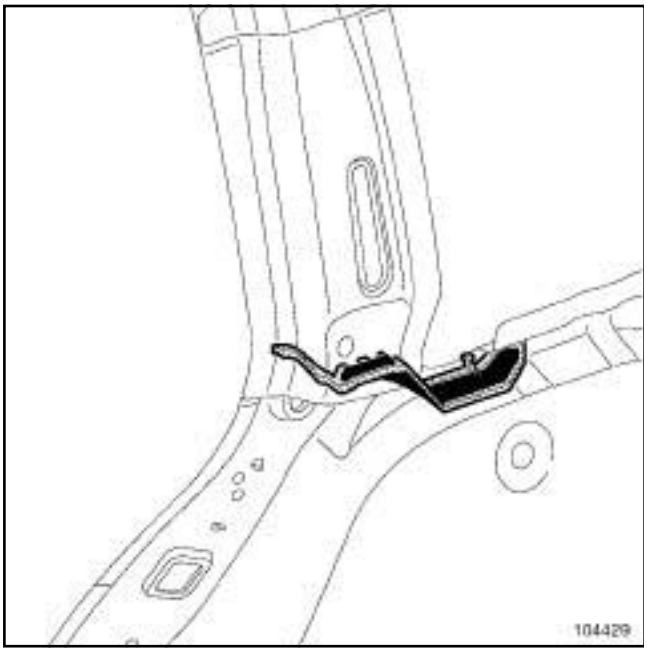

104429

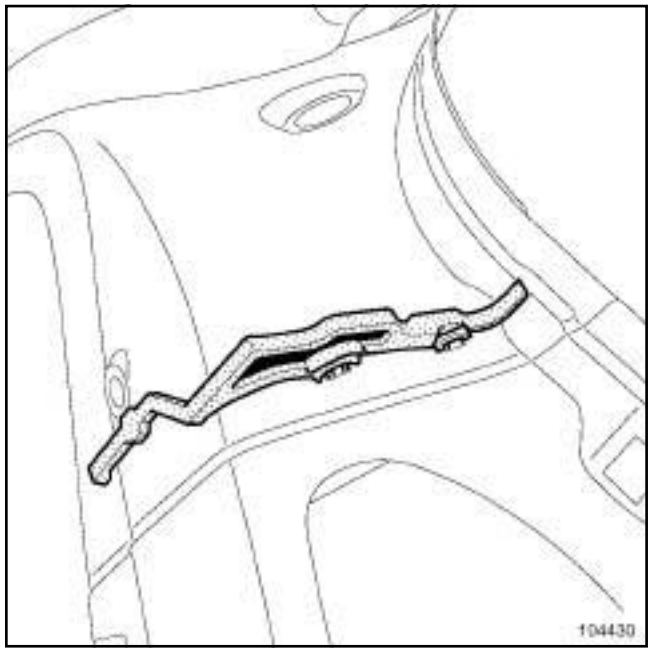

104430

Order the inserts according to the cuts selected.

Details concerning cut (B)

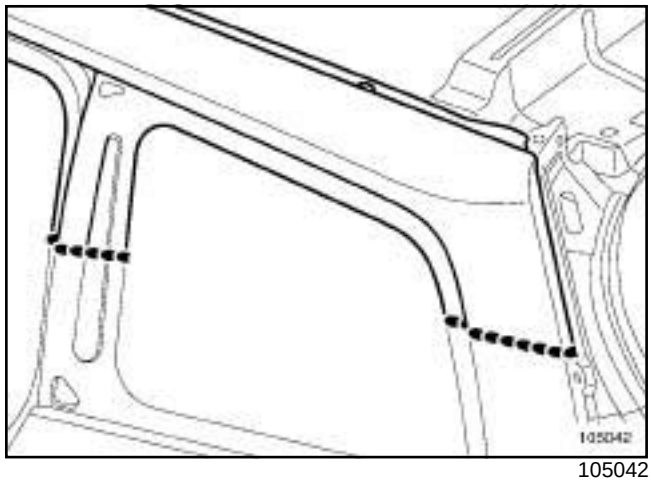

105042

Details concerning cut (C)

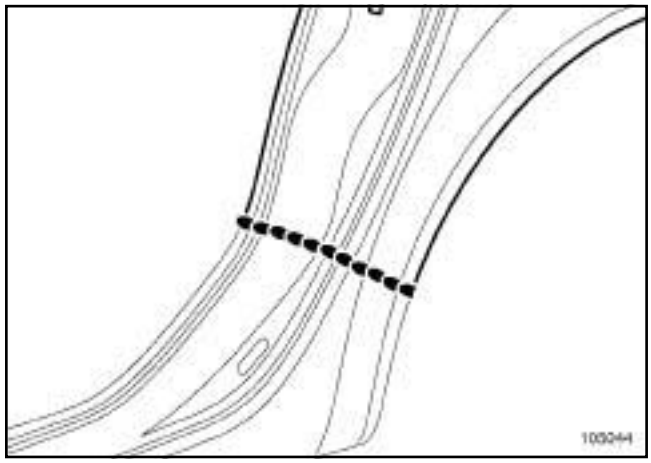

105044

Special note on replacing the rear wing panel

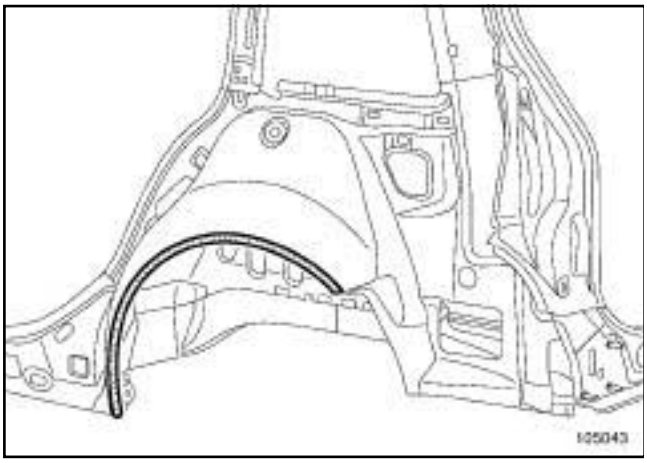

105043

Note:

Use a structural adhesive (part no.: **77 11 219 885**) for the crimping area.

Use an **M.J.Pro** type adhesive to ensure that the seal and fitting of the rear wing panel are correct after crimping.

Lights support lining: Description

The replacement of this part is a supplementary operation to the replacement of the rear wing panel and the rear lights support following a rear side impact.

In the procedure described below, you will find only the descriptions and connections which are specific to the part concerned.

Information on any additional parts will be provided in the respective sections (see Contents).

The operation presents no particular difficulties.

WARNING

If the spot welds cannot be made as they were originally using an electrical spot welding machine, these should be replaced with plug welds after holes have been drilled in the first panel.

COMPOSITION OF THE REPLACEMENT PART

Part supplied on its own.

105216

PARTS CONCERNED (thickness in mm) :

- lights support lining **1** ,
- lights support **0.8** ,
- C-pillar closure panel **0.7** ,
- interior quarter panel rear reinforcement **1.2** ,
- quarter panel lining **0.7** .

PART IN POSITION

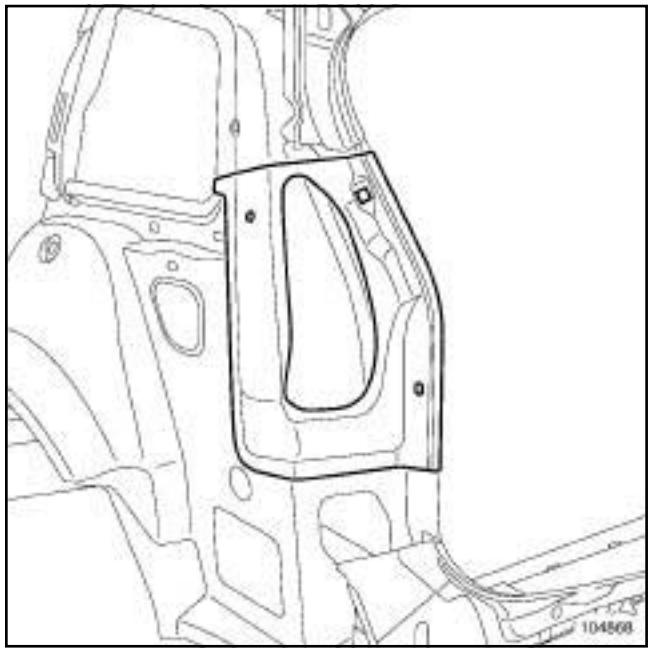

104868

The replacement of this part is a supplementary operation to the replacement of the rear end panel and rear light support following a rear impact.

Information on any additional parts will be provided in the respective sections (see contents).

WARNING
If the spot welds cannot be made as they were originally using an electrical spot welding machine, these should be replaced with plug welds after holes have been drilled in the first panel.

COMPOSITION OF THE REPLACEMENT PART

Part supplied on its own.

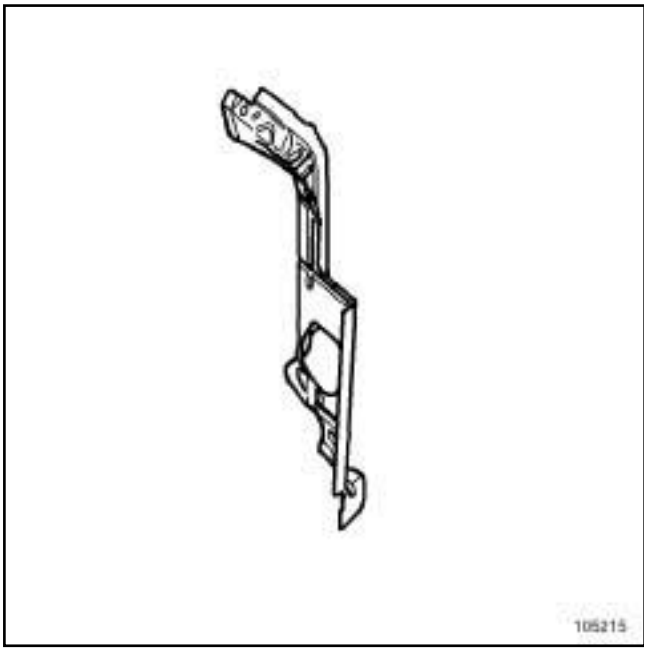

105215

PARTS CONCERNED (thickness in mm) :

- C-pillar closure panel **0.7** ,
- quarter panel lining **0.7** ,
- interior quarter panel rear reinforcement **1.2** ,
- lights support lining **1** ,
- lights support **0.8** ,
- lower section quarter panel lining support **0.7** ,
- far rear lower cross member **1** .

PART IN POSITION

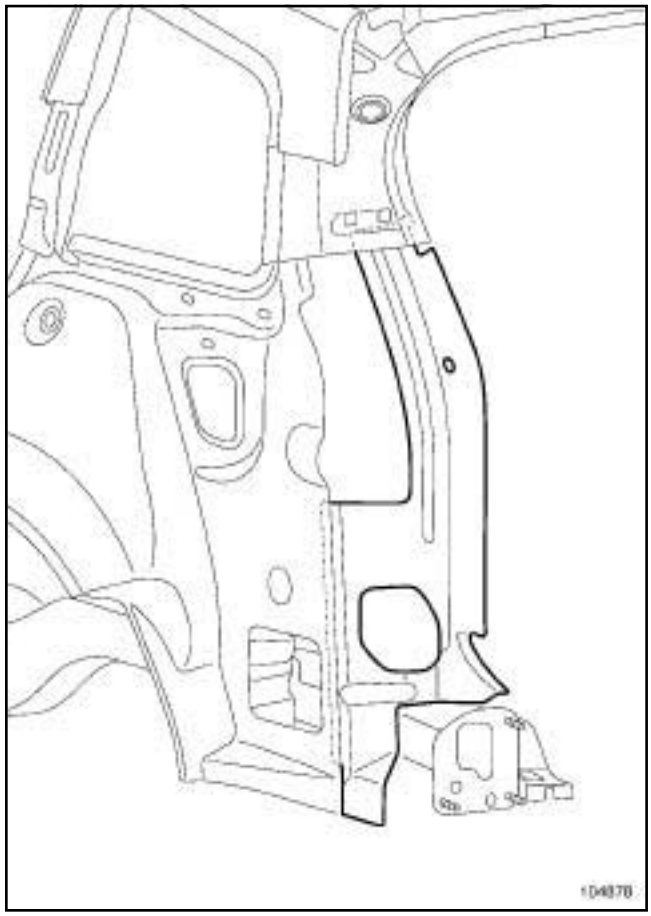

104878

The options for replacing this part are as follows:

- complete, **cut (a)** additional to the rear wing panel,

- partial, **cut (b)** additional to the sill panel.

> Note:
>
> When replacing this part, it is necessary to order the quarter panel lining and remove the outer rear wheel arch.

> **WARNING**
>
> If the spot welds cannot be made as they were originally using an electrical spot welding machine, these should be replaced with plug welds after holes have been drilled in the first panel.

Information on any additional parts will be provided in the respective sections (see contents).

COMPOSITION OF THE REPLACEMENT PART

Part supplied with:

- the rear parcel shelf bridge piece.

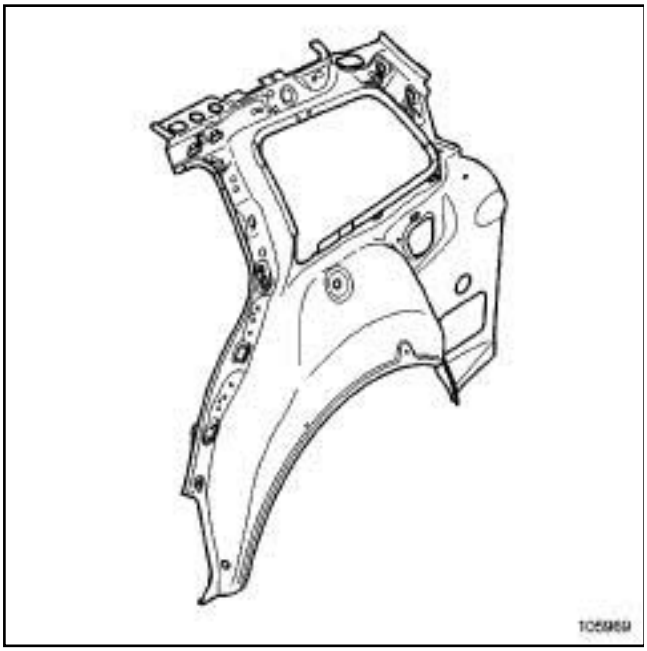

105969

PARTS CONCERNED (thickness in mm):

- exterior rear wheel arch **(0.7)** ,

- quarter panel lining **(0.7)** .

Detailed view of cut (a)

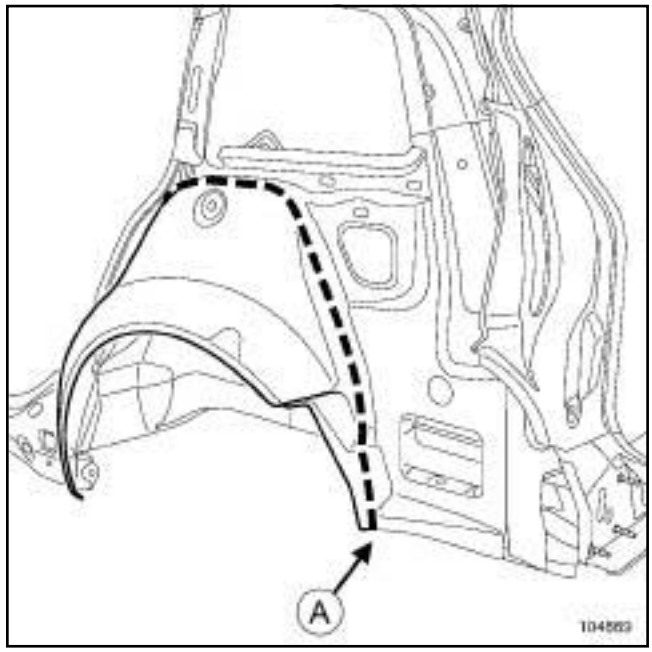

104869

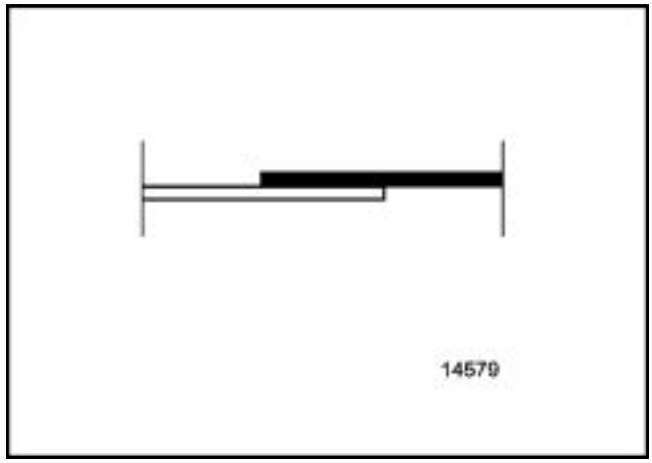

14579

Detailed view of cut (b)

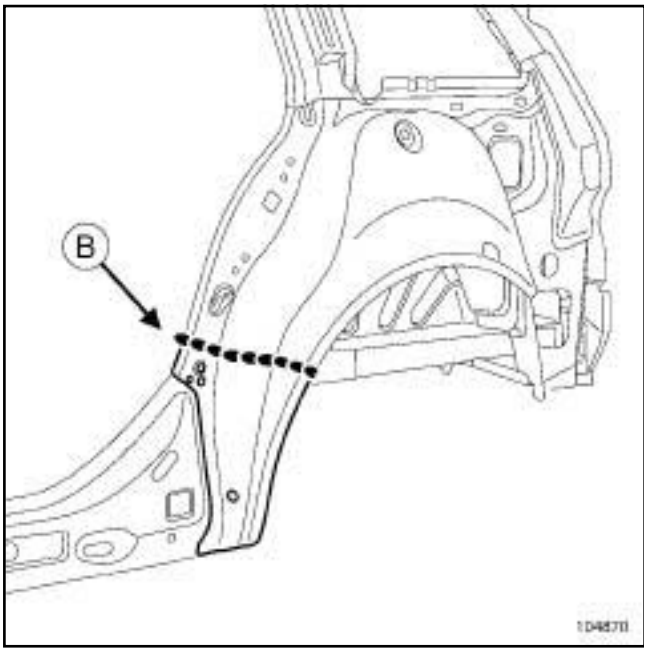

104870

Spacing between the spot welds **60 mm** .

Apply a mastic bead in the corner to perform sealing.

Use **M.J.Pro** mastic (part number: **77 11 172 676**).

The replacement of this part is a supplementary operation to the partial replacement of the outer wheel arch for a rear side impact.

Information on any additional parts will be provided in the respective sections (see contents).

Note:

The operations in the procedure are carried out on the left-hand part. The right-hand side of the vehicle has a slightly different shape due to the fuel filler neck, but the replacement method is the same.

WARNING

If the spot welds cannot be made as they were originally using an electrical spot welding machine, these should be replaced with plug welds after holes have been drilled in the first panel.

COMPOSITION OF THE REPLACEMENT PART

Part supplied on its own.

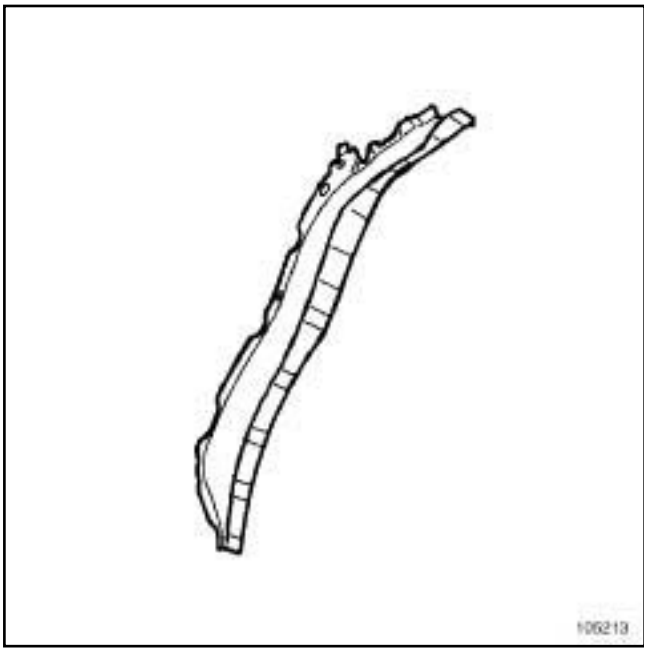

105213

PARTS CONCERNED (thickness in mm) :

- front section of the rear wheel arch closure panel **0.7** ,
- rear section of the rear wheel arch closure panel **0.7** ,
- quarter panel lining **0.7** ,
- rear wheel arch connecting piece reinforcement **0.7** ,
- rear side roller mounting interior support **2** ,
- interior roller support reinforcement **0.7** .

PART IN POSITION

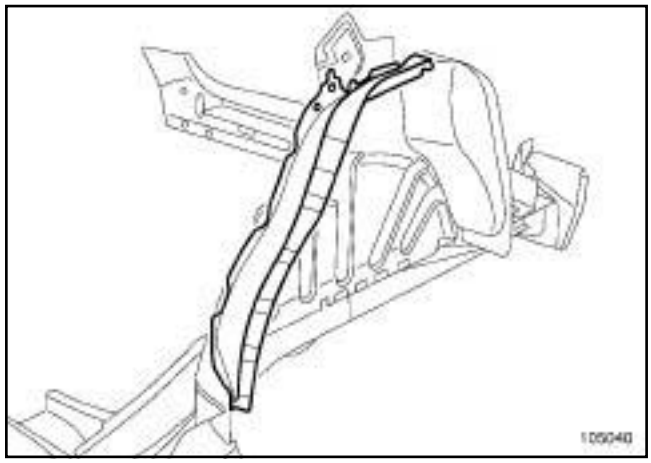

105040

The replacement of this part is a supplementary operation to the partial replacement of the outer wheel arch for a rear side impact.

Information on any additional parts will be provided in the respective sections (see contents).

Note:

The operations in the procedure are carried out on the left-hand part. The right-hand side of the vehicle has a slightly different shape due to the fuel reservoir filler neck, but the replacement procedure is the same.

WARNING

If the spot welds cannot be made as they were originally using an electrical spot welding machine, these should be replaced with plug welds after holes have been drilled in the first panel.

COMPOSITION OF THE REPLACEMENT PART

Part supplied on its own.

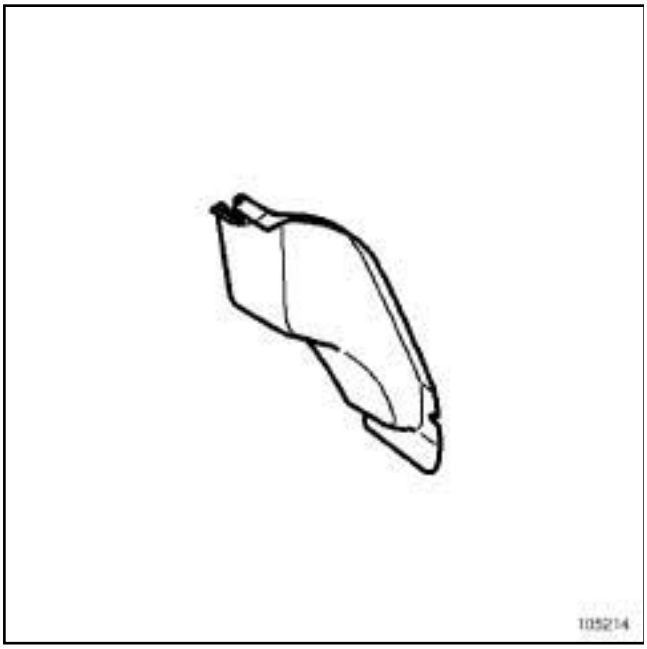

105214

PARTS CONCERNED (thickness in mm) :

- rear section of the rear wheel arch closure panel **0.7** ,
- front section of the rear wheel arch closure panel **0.7** ,
- interior rear wheel arch **0.7** ,
- quarter panel lining **0.7** ,
- wheel arch extension **0.7** ,
- rear wheel arch connecting piece reinforcement **0.7** .

PART IN POSITION

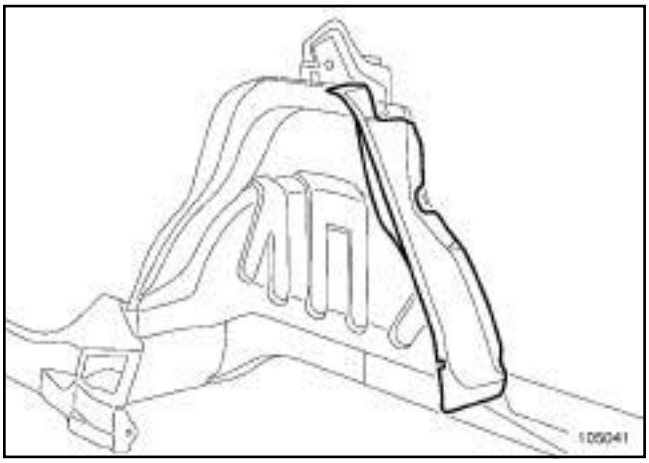

105041

Quarter panel lining: Description

The replacement of this part is supplementary to the replacement of the rear wing panel and the roof panel following a rear side collision.

Information on any additional parts will be provided in the respective sections (see contents).

WARNING

If the spot welds cannot be made as they were originally using an electrical spot welding machine, these should be replaced with plug welds after holes have been drilled in the first panel.

COMPOSITION OF THE REPLACEMENT PART

Part supplied with:

- rear roof drip moulding trim,
- rear section body side closure piece,
- rear shoulder harness reinforcement,
- rear inner/outer wheel arch connecting piece,
- rear inner/outer wheel arch rear section connecting piece,
- side roller mounting interior support,
- rear wheel arch connecting piece reinforcement,
- bridge piece for attaching rear side torso airbag,
- bare side plate for attaching airbag,
- rear centre linkage attachment reinforcement.

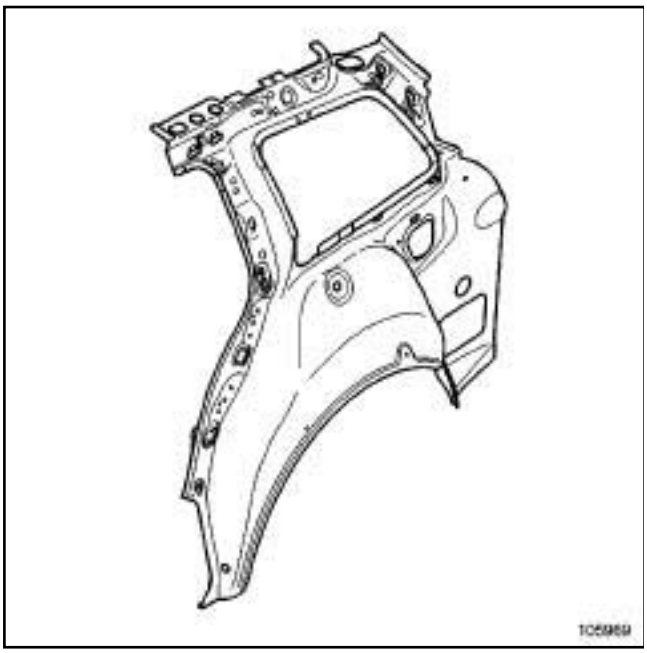

105969

PARTS CONCERNED (thickness in mm) :

- quarter panel lining **0.7** ,
- shoulder harness reinforcement **1** ,
- front section of the rear wheel arch closure panel **0.7** ,
- rear section of the rear wheel arch closure panel **0.7** ,
- interior quarter panel rear reinforcement **1.2** ,
- rear wheel arch connecting piece reinforcement **0.7** ,
- body side **0.7** ,
- C-pillar closure panel **0.7** ,
- lights support lining **1** ,
- rear roof drip moulding stiffener **1** ,
- rear roof drip moulding lining **1** ,
- sill panel closure panel **1** ,
- roof rear arch **0.7** ,
- far rear lower cross member **1** .

PART IN POSITION

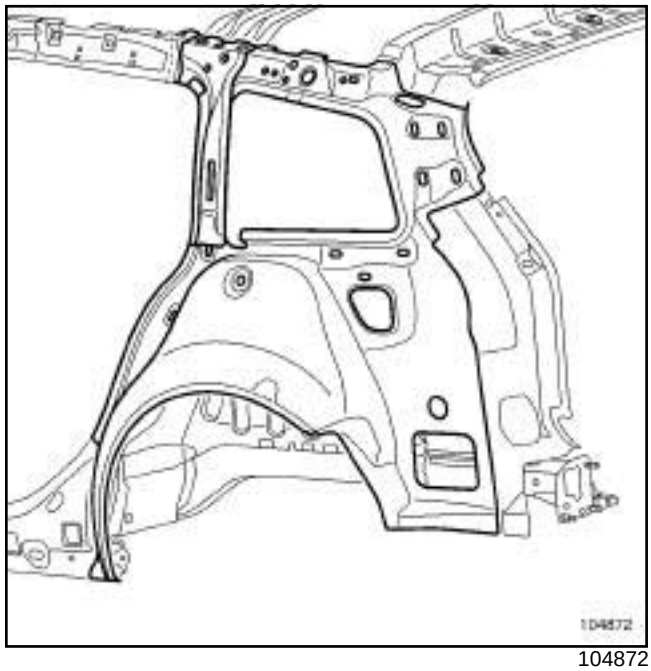

104872

Detailed view of the expanding insert position

Note:

The expanding inserts must be replaced.

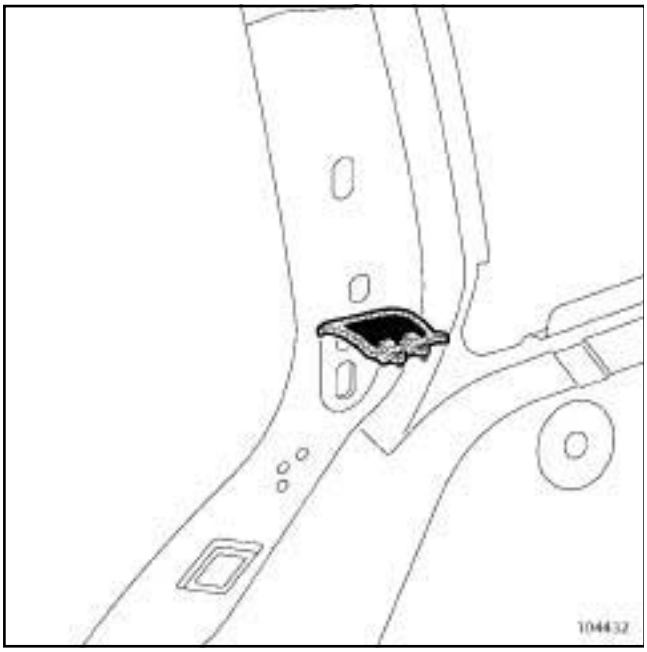

104432

The replacement of this part is a complementary operation to the replacement of the light support for a rear impact and the roof panel for overturning.

The information on the additional parts will be provided in the corresponding sections (refer to contents).

WARNING

If the spot welds cannot be made as they were originally using an electrical spot welding machine, these should be replaced with plug welds after holes have been drilled in the first panel.

COMPOSITION OF THE REPLACEMENT PART

Part supplied with:

- roof bar mounting support,

- rear light support lining.

105211

PARTS CONCERNED (thickness in mm):

- interior quarter panel rear reinforcement **1.2** ,

- roof bar mounting support **2** ,

- rear light support lining **1** ,

- rear side rain channel **1.2** ,

- roof rear cross member **0.8** ,

- quarter panel lining **0.6** ,

- rear light support **0.8** .

PART IN POSITION

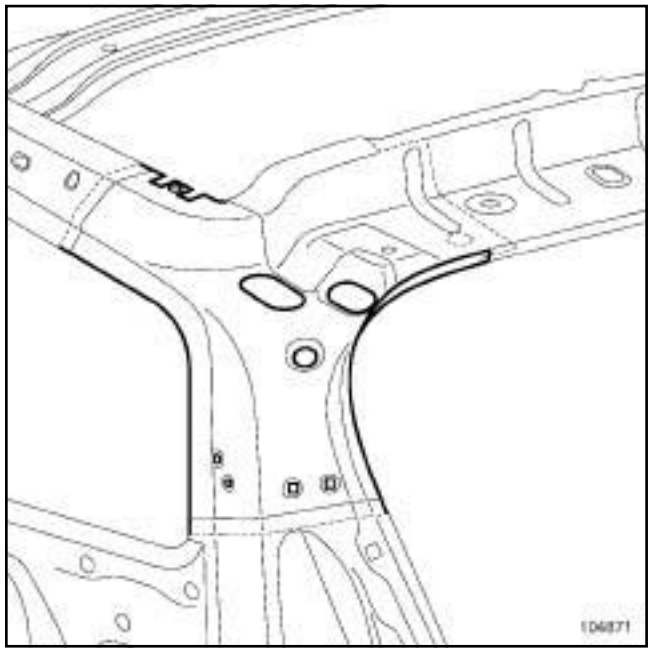

104871

Detailed view of the position of the expanding inserts

Note:

The expanding inserts must be replaced.

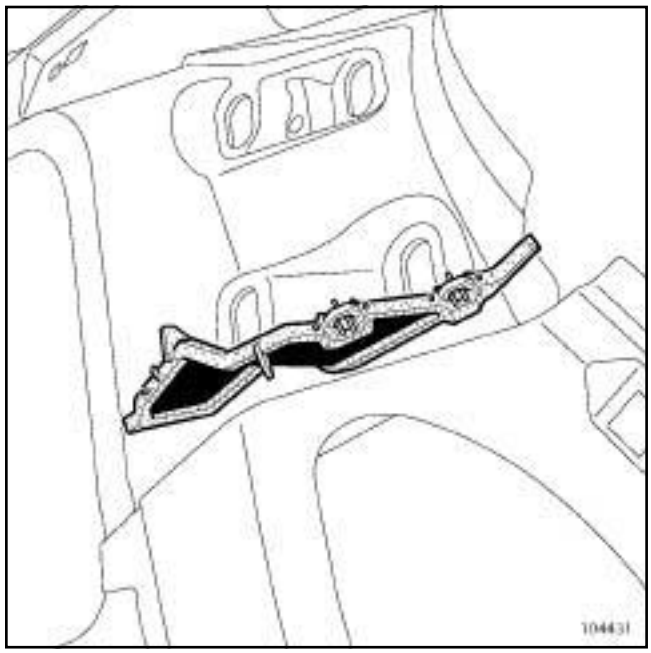

104431

The replacement of this part is a basic operation for a rear impact.

Information on any additional parts will be provided in the respective sections (see Contents).

This operation is complementary to the rear lights support.

WARNING
If the spot welds cannot be made as they were originally using an electrical spot welding machine, these should be replaced with plug welds after holes have been drilled in the first panel.

COMPOSITION OF THE REPLACEMENT PART

Part supplied with:

- plain rear end panel,
- rear end panel lining,
- rear section rear floor mounting reinforcement,
- rear cross member closure piece,
- rear section quarter panel lining support,
- luggage compartment lid striker panel reinforcement,
- nut for welding,
- M8 captive nut.

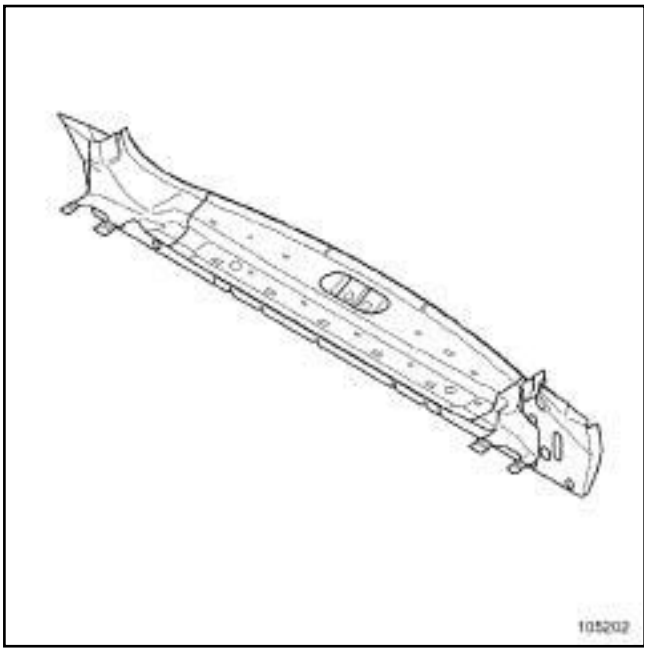

105202

PARTS CONCERNED (thickness in mm) :

- rear end panel **0.7** ,
- quarter panel lining support **0.7** ,
- rear wing panel **0.7** ,
- light support **0.8** ,
- light support lining **1** ,
- rear end cross member **0.7** ,
- rear cross member closure piece **0.7** ,
- rear side member **1.6** ,
- rear side member closure panel **0.7** .

PART IN POSITION

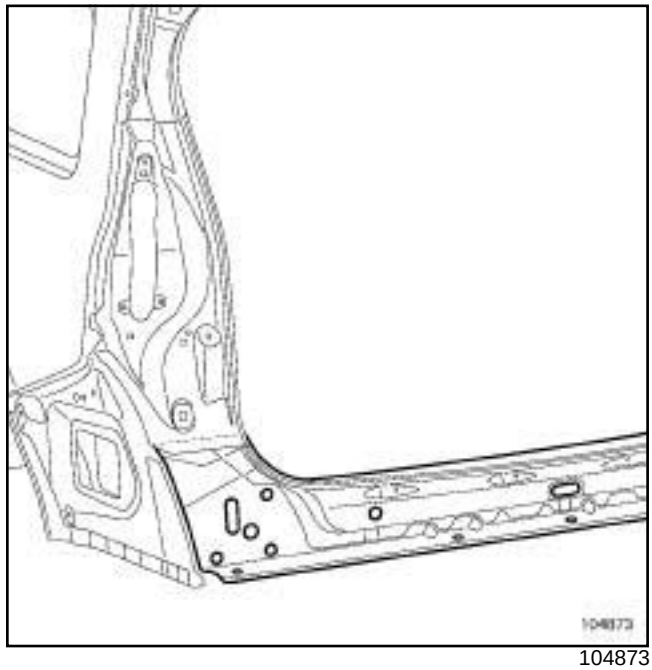

104873

REMOVAL

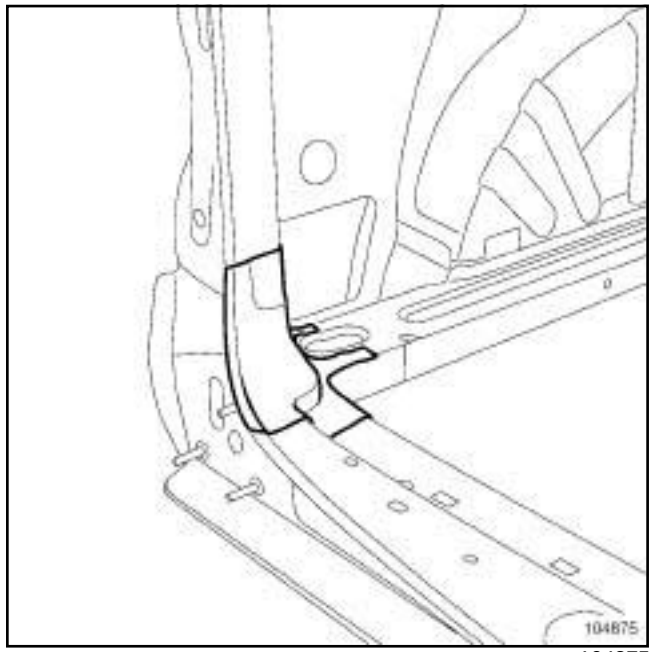

104875

For replacement of the rear end panel assembly, remove the two quarter panel lining supports, rear section.

The replacement of this part is a basic operation for a rear impact.

Information on any additional parts will be provided in the respective sections (see Contents).

WARNING

If the spot welds cannot be made as they were originally using an electrical spot welding machine, these should be replaced with plug welds after holes have been drilled in the first panel.

COMPOSITION OF THE REPLACEMENT PART

Part supplied on its own.

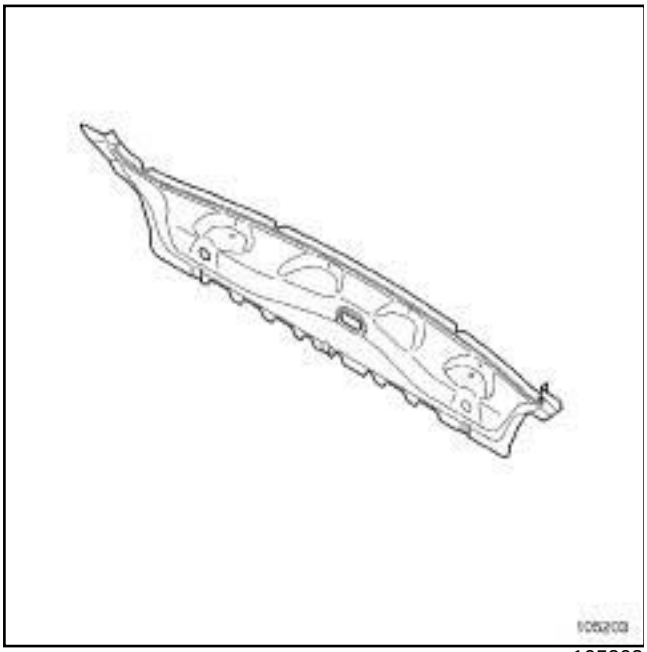

105203

PARTS CONCERNED (thickness in mm) :

- rear end panel **0.7** ,
- rear end panel lining **0.8** .

PART IN POSITION

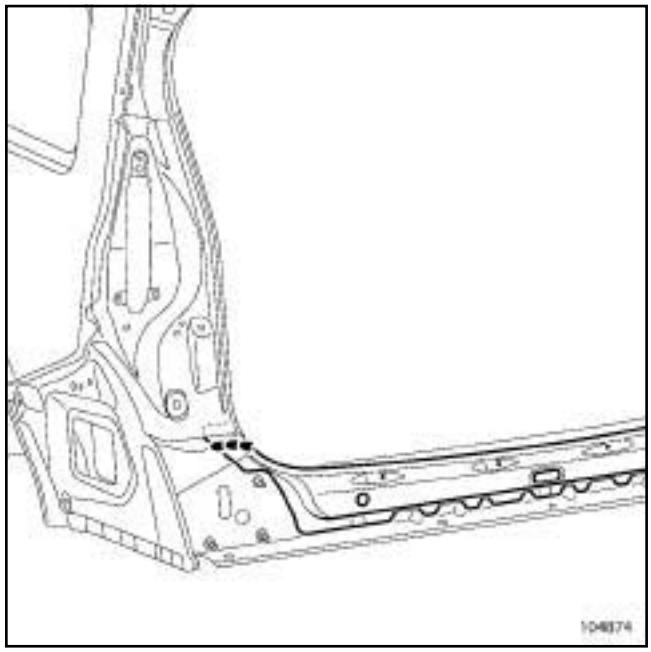

104874

The replacement of this part is a basic operation.

The procedure presents no particular difficulties.

WARNING

If the spot welds cannot be made as they were originally using an electrical spot welding machine, these should be replaced with plug welds after holes have been drilled in the first panel.

For bonding areas, use a setting adhesive of type **M.J.Pro** (part no.: **77 11 172 676**).

In the procedure described below, you will find only the descriptions and connections which are specific to the part concerned.

COMPOSITION OF THE REPLACEMENT PART

Part supplied on its own.

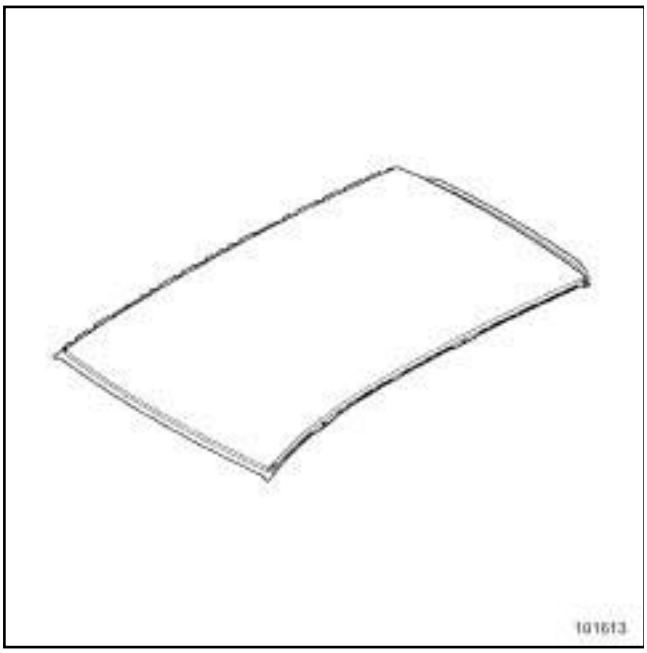

101613

PARTS CONCERNED (thickness in mm):

- roof **0.7** ,
- body side **0.7** ,
- body side reinforcement front ring **1.2** ,
- B-pillar upper lining **1.5** ,
- rear roof drip moulding lining **1** ,
- rear roof drip moulding stiffener **1** ,
- quarter panel lining **0.7** ,
- interior quarter panel rear reinforcement **1.2** ,
- roof rear cross member **0.8** ,
- roof front cross member **0.7** .

PART IN POSITION

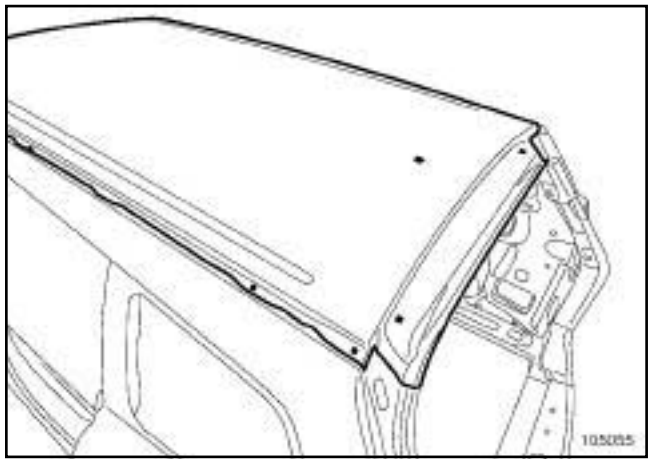

105055

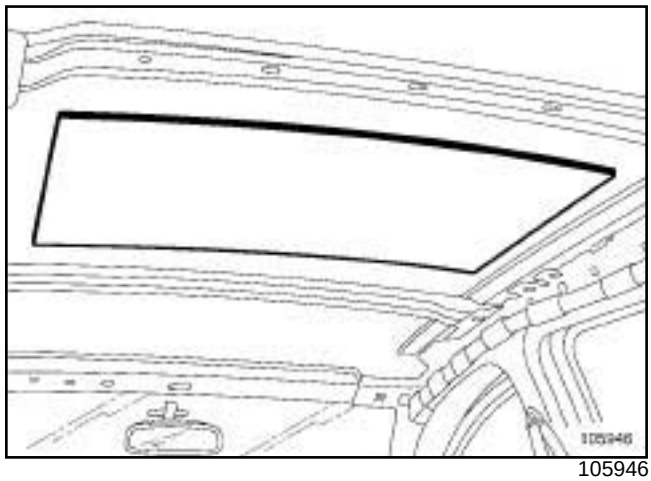

105946

To perform this operation, order the roof stiffener cardboard as a supplement.

Bonding area

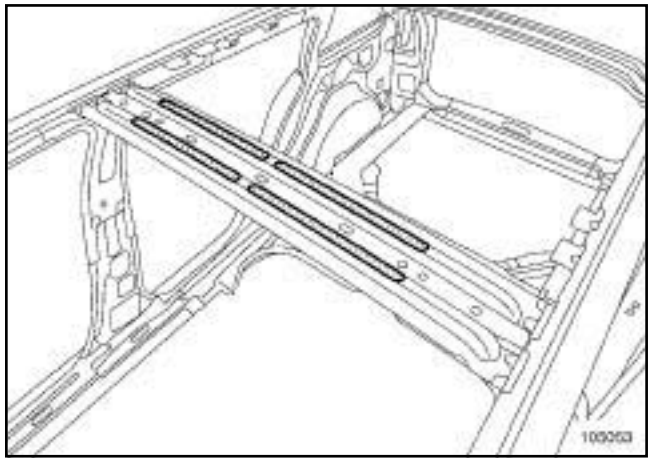

105053

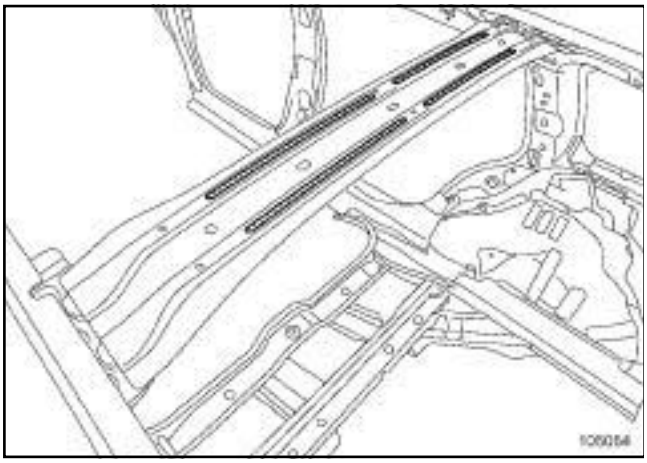

105054

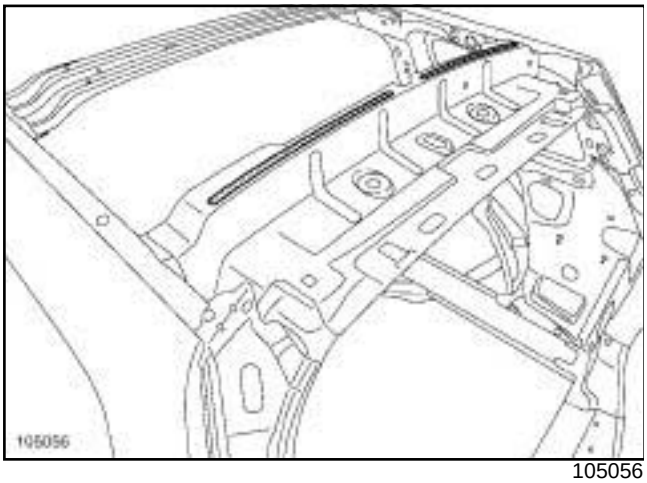

105056

Roof stiffener cardboard

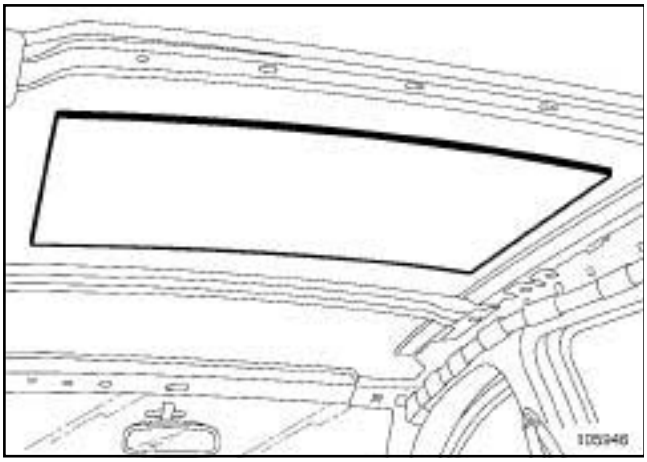

105946

Place the roof stiffener cardboard between the roof centre cross member and the roof arch.

Roof panel arch: Description

The replacement of this part is a supplementary operation to the roof.

> Note:
>
> The procedure for replacing this part has no specific notes, and joints can all be made as originally.

For information purposes, there is a diagram of the part fitted to the vehicle in the procedure.

Information on any additional parts will be provided in the respective sections (see Contents).

COMPOSITION OF THE REPLACEMENT PART

Part supplied on its own.

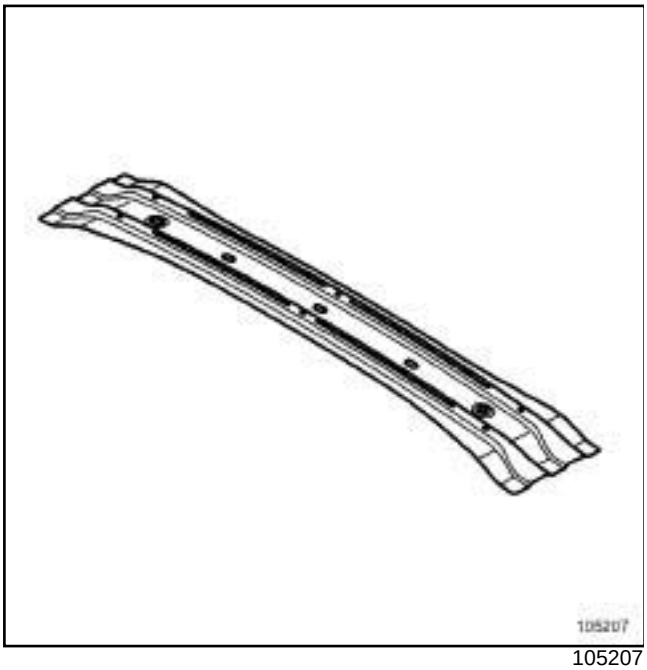

105207

PARTS CONCERNED (thickness in mm) :

- roof arch **0.7** ,
- quarter panel lining **0.7** ,
- shoulder harness reinforcement **1** .

PART IN POSITION

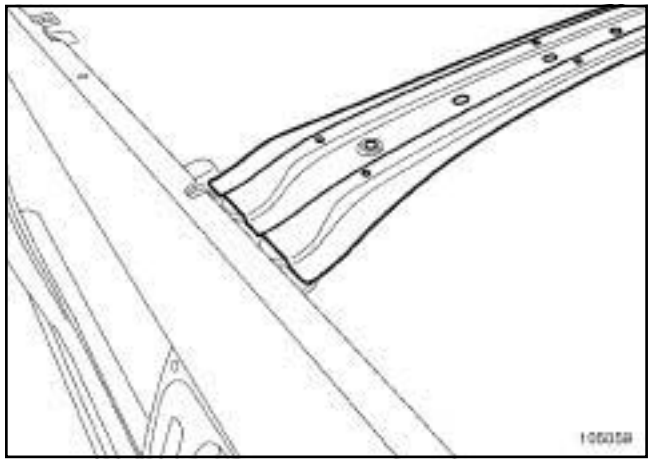

105059

Roof rear cross member: Description

The replacement of this part is a supplementary operation to the roof.

> Note:
>
> The procedure for replacing this part has no specific notes, and joints can all be made as originally.

For information purposes, there is a diagram of the part fitted to the vehicle in the procedure.

Information on any additional parts will be provided in the respective sections (see Contents).

COMPOSITION OF THE REPLACEMENT PART

Part supplied with:

- plain roof rear cross member,
- rear cross member left-hand side lining,
- rear cross member right-hand side lining,
- two nuts for welding.

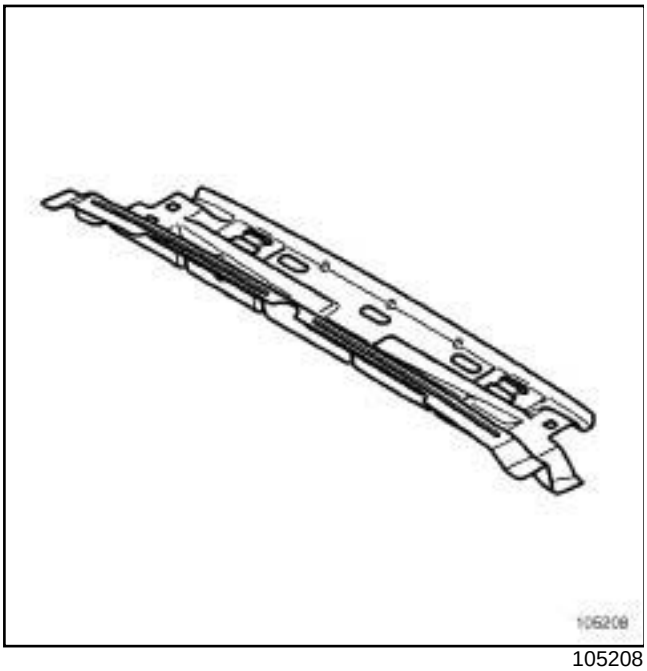

105208

PARTS CONCERNED (thickness in mm) :

- roof rear cross member **0.8** ,
- interior quarter panel rear reinforcement **1.2** .

PART IN POSITION

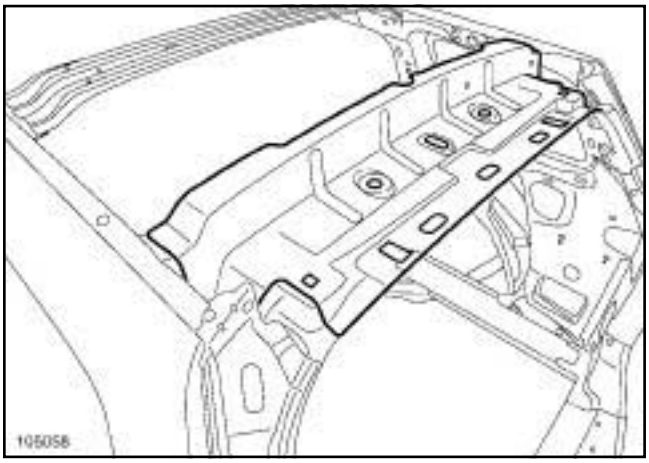

105058

Adjustment areas

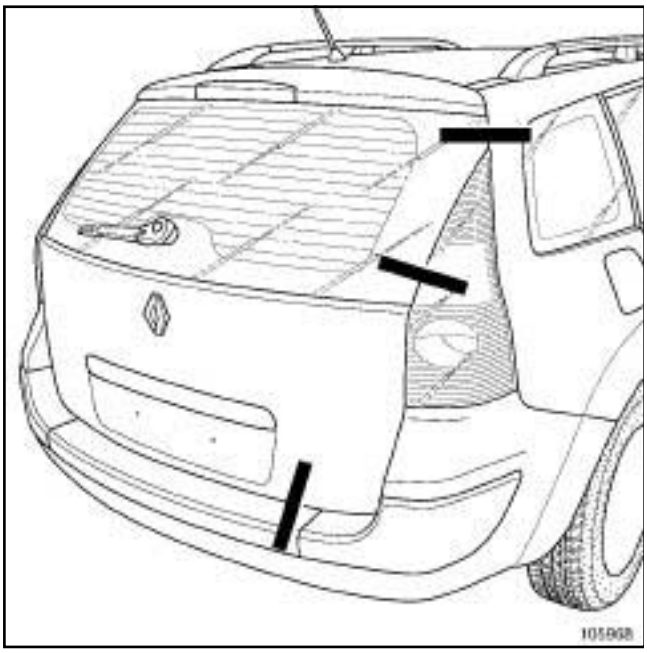

105968

PRE-ASSEMBLY PREPARATION

On the vehicle:

Remove:

- the end panel interior trim,
- the headlining (partially),
- the tailgate striker plate.

Fit the rear lights.

On the replacement tailgate:

Fit:

- the lock,
- the side centre lining stops,
- the fuse strip.

FITTING THE COMPONENT

> Note:
>
> Before final refitting, re-seal between the hinges and the tailgate with filler mastic.

Finger tighten all the attachments.

This operation requires two people.

Adjustment procedure

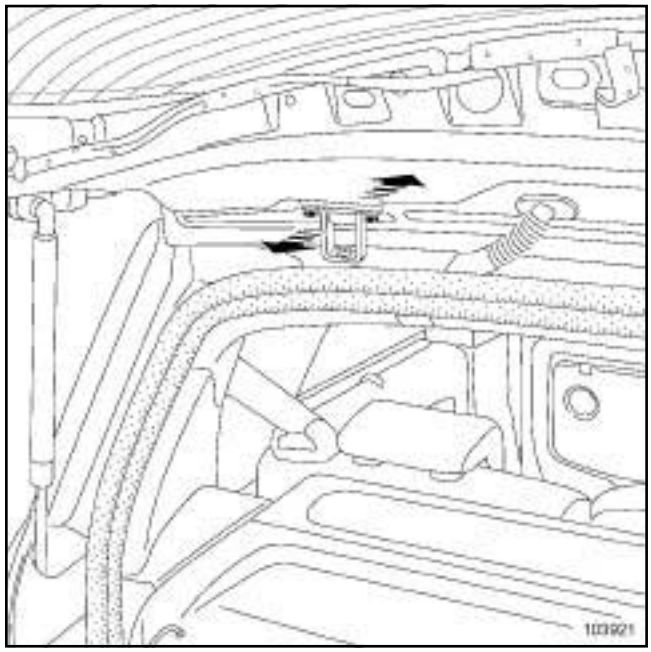

103921

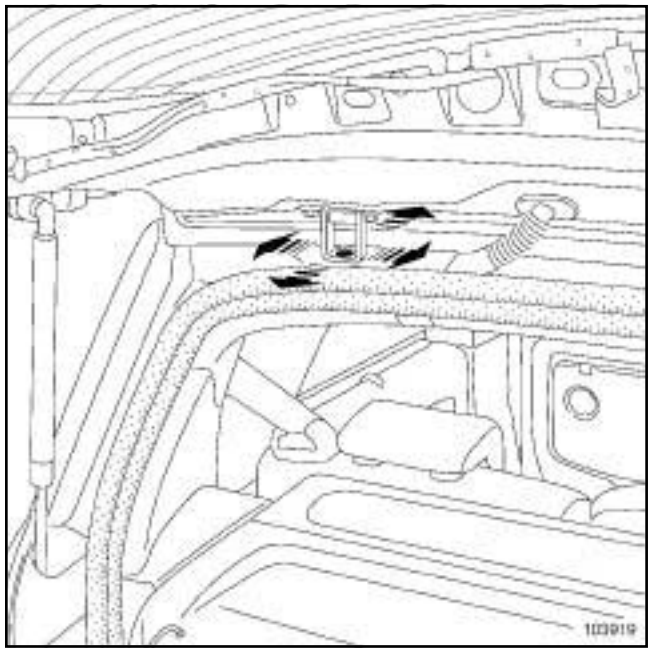

103919

Special tooling required	
Car. 1363	Door mirror glass removal tool.

The replacement of this part is a basic operation for a rear impact.

> Note:
>
> Order an additional set of clips, available from the Parts Department.

For information on the replacement of each component attached to the tailgate, refer to their corresponding sections (see Contents).

Two operators are required to hold the tailgate.

Details of shut lines can be found in section **01C** .

> Note:
>
> Before final refitting, re-seal the hinge support area with filler mastic.

COMPOSITION OF THE REPLACEMENT PART

Part supplied on its own.

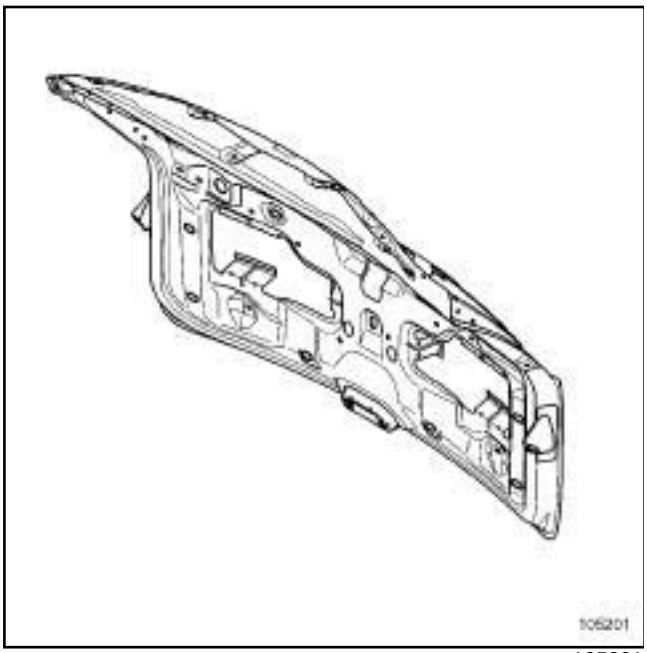

105201

OPENING DURING A FAULT

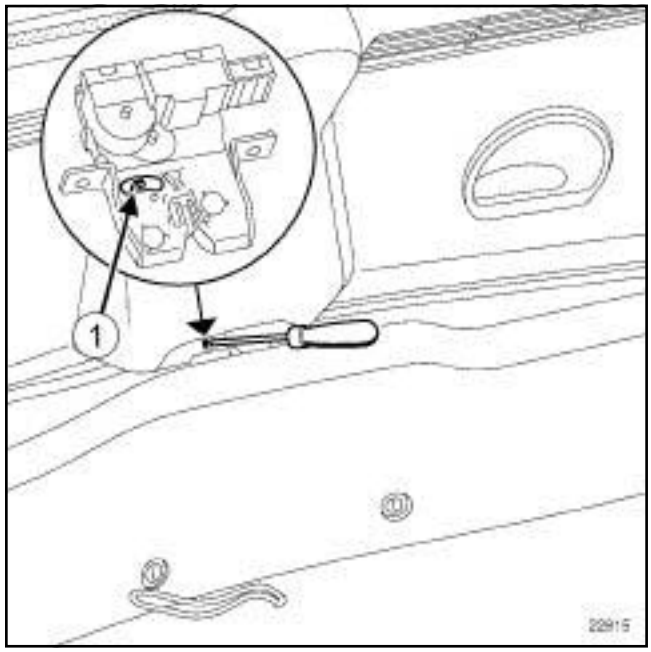

22815

> Note:
>
> In the event of an electrical fault, open the tailgate manually.
>
> Unlock the tailgate lock by pushing lug (**1**) with a screwdriver.
>
> This operation is performed from inside the vehicle.

Disconnect the battery.

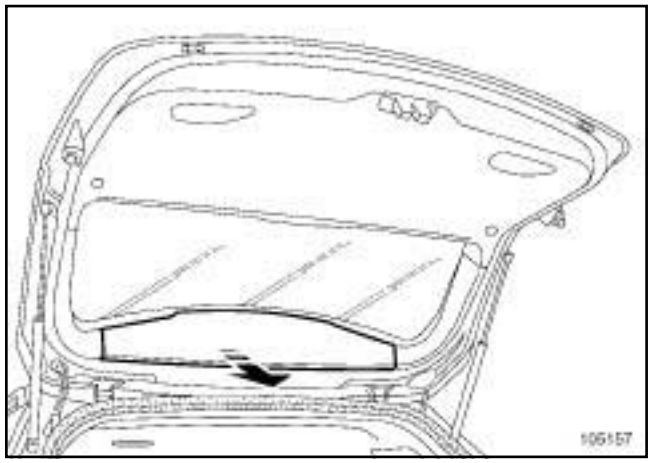

105157

Unclip the upper trim by pulling it.

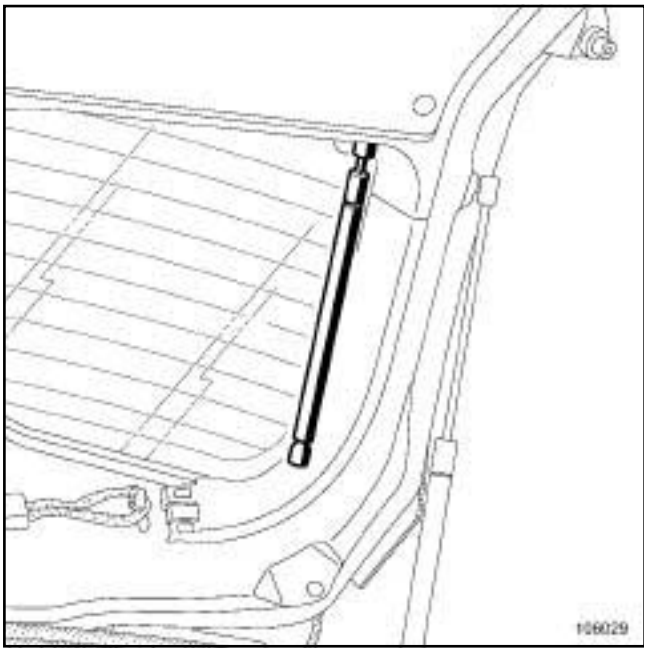

106029

Unclip the opening rear screen strut (if fitted to the vehicle) by pulling and turning the strut, taking care not to touch the opening panel.

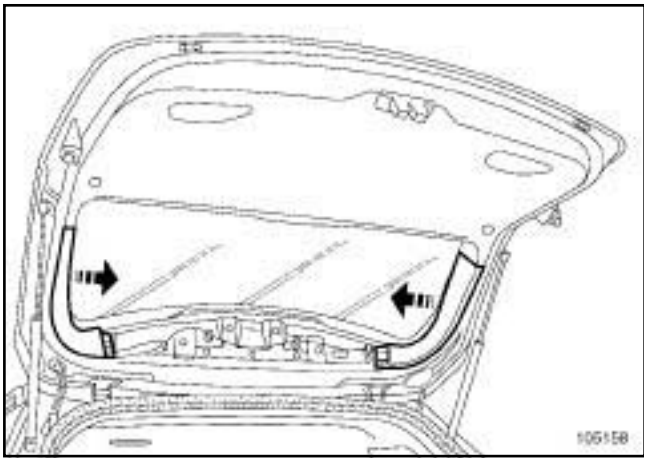

105158

Unclip the side trims.

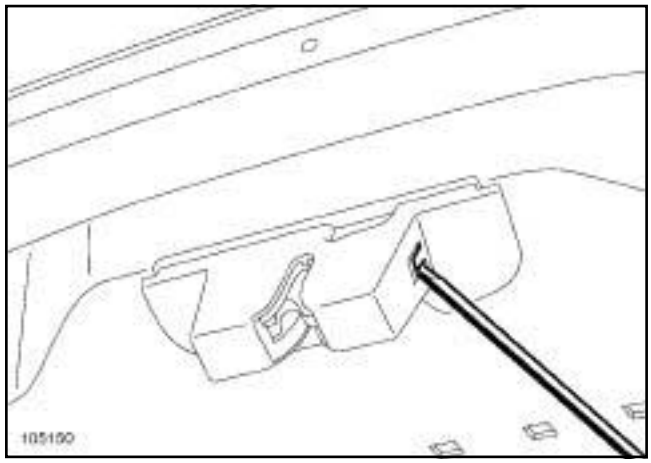

105150

Release the lock trim piece.

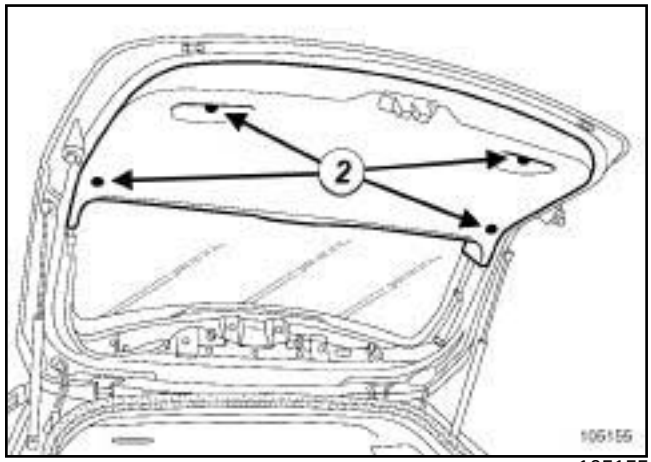

105155

Remove the bolts (**2**) .

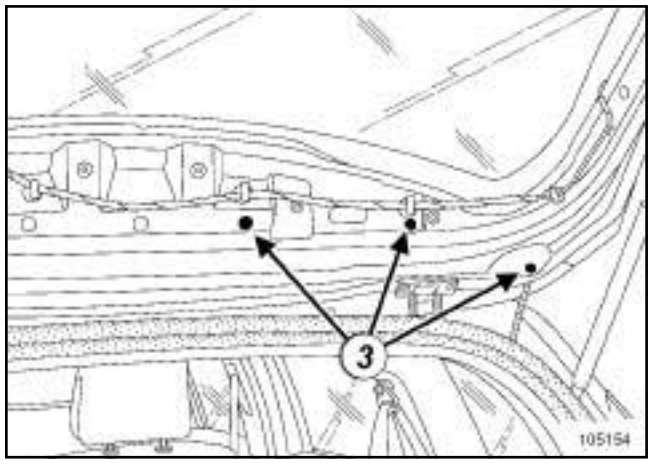

105154

Remove the spoiler mounting bolts (**3**) .

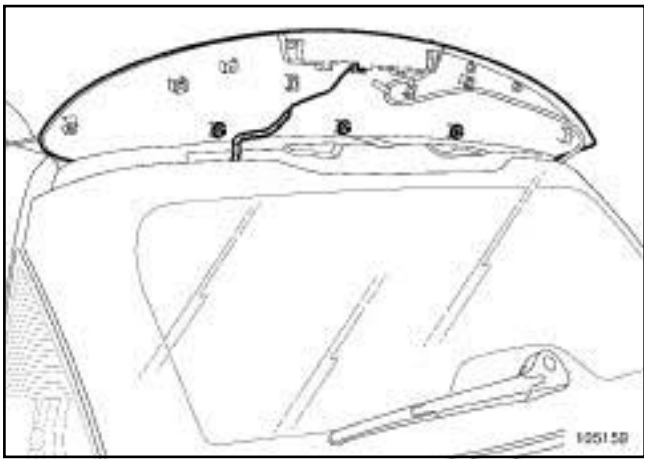

105159

Unclip the spoiler upwards.

Disconnect the connector from the 3rd brake light.

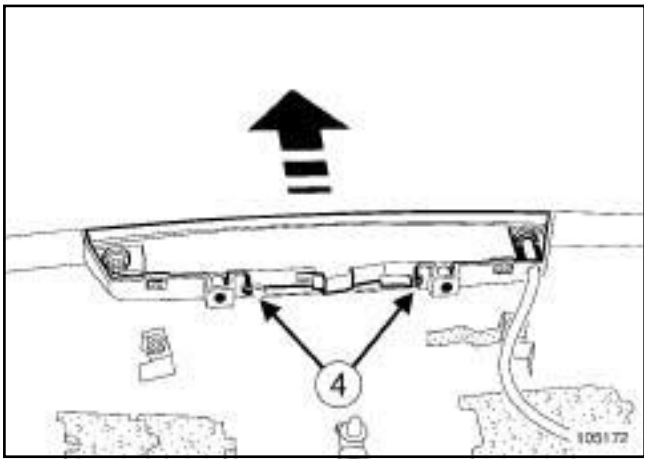

105172

Remove:

- the two bolts,
- the two clips (**4**) .

Unclip the jet.

Remove:

- the jet,
- the 3rd brake light.

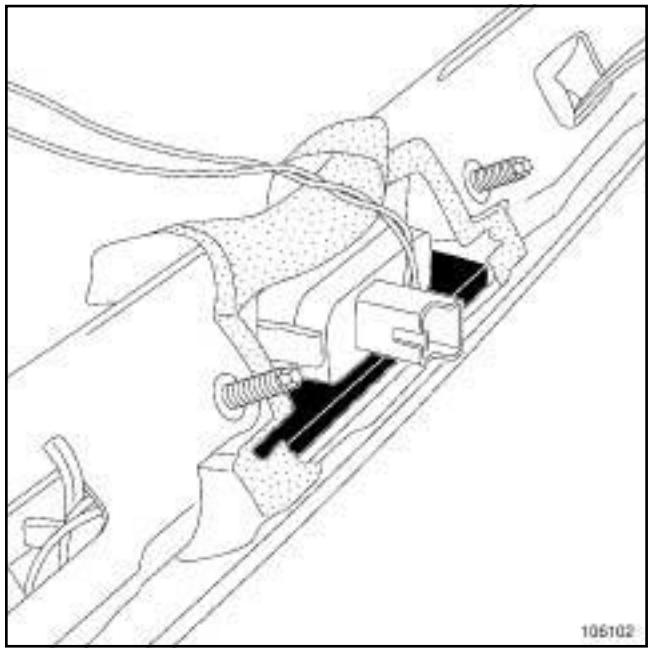

106102

Disconnect the hands-free opening button connector (if fitted to the vehicle).

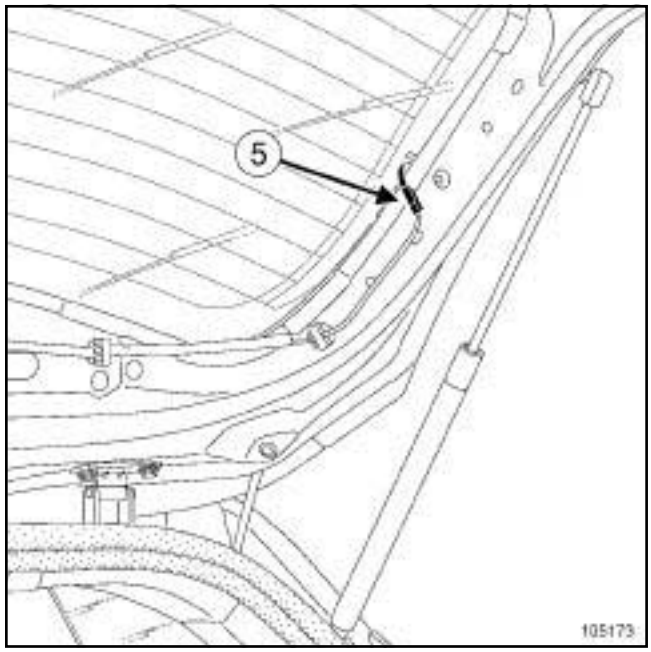

105173

Disconnect the de-icer connector (**5**) .

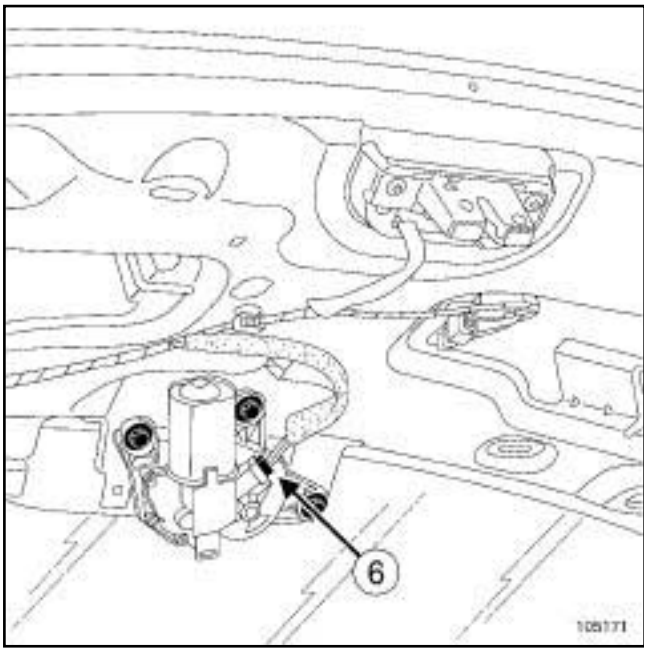

105171

Disconnect the connector (**6**) from the wiper motor (if fitted to the vehicle).

Disconnect the connector on the tailgate trim.

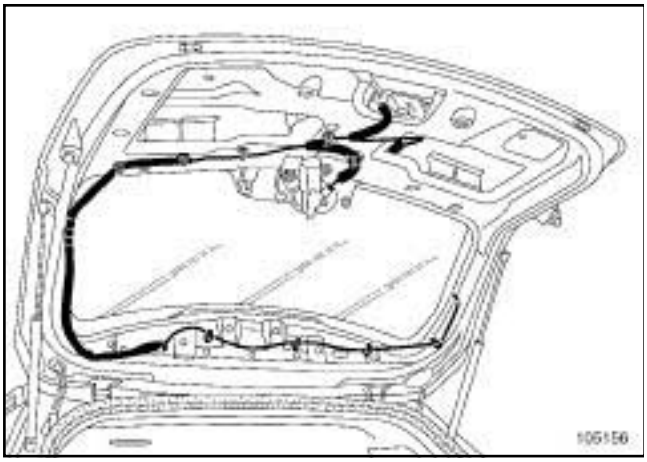

105156

Remove the tailgate harness and the rear screen washer hose.

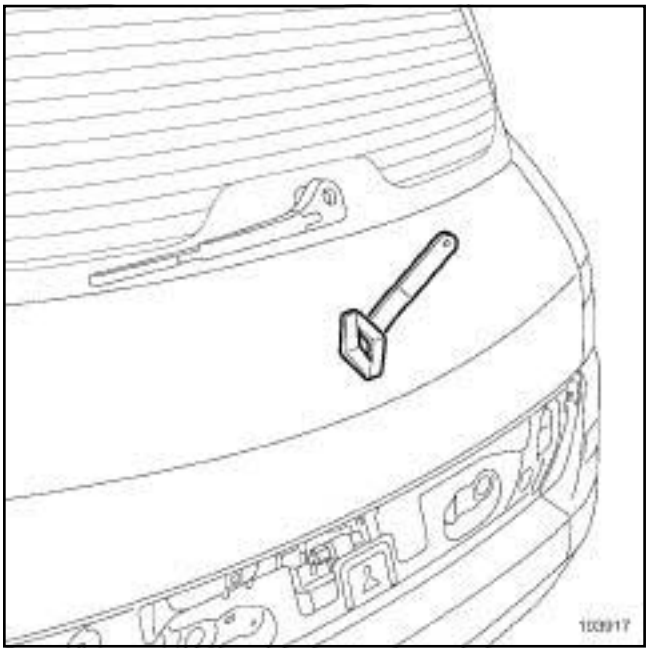

103917

Remove the badge using the **(Car. 1363)**

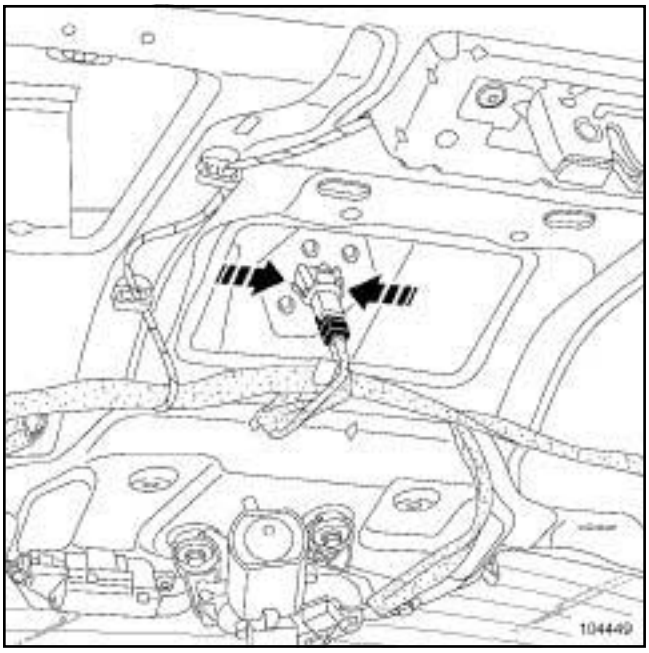

104449

Press the hands-free opening button tabs (if fitted to the vehicle).

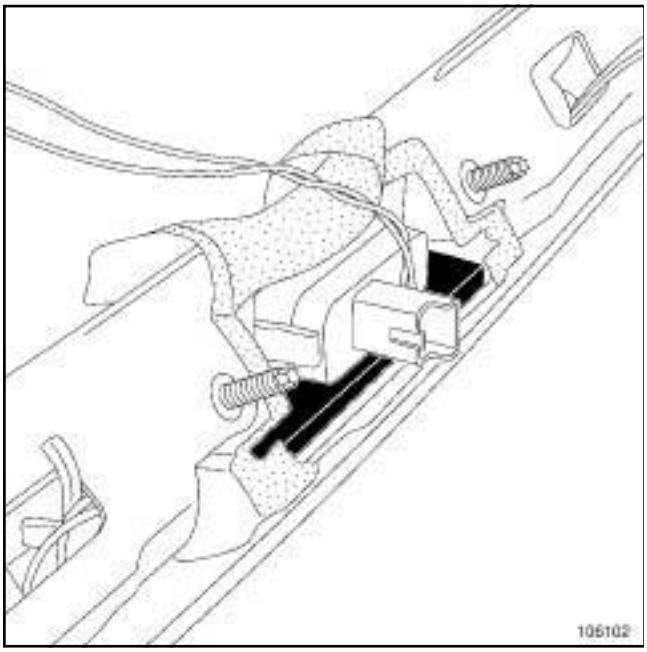

106102

Remove the hands-free opening button (if fitted to the vehicle).

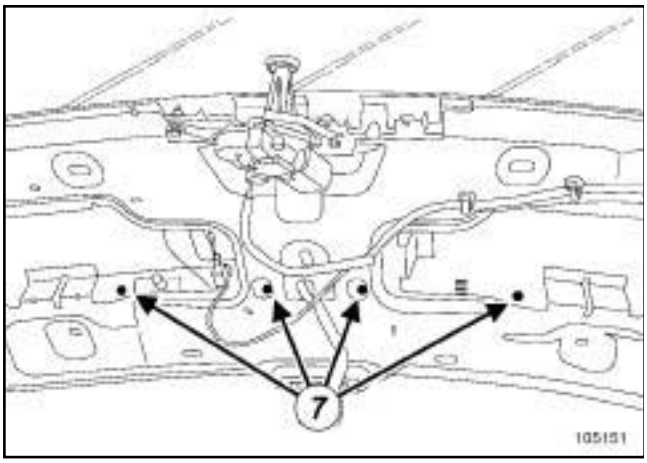

105151

Remove the mounting bolts (**7**) from the number plate light mounting.

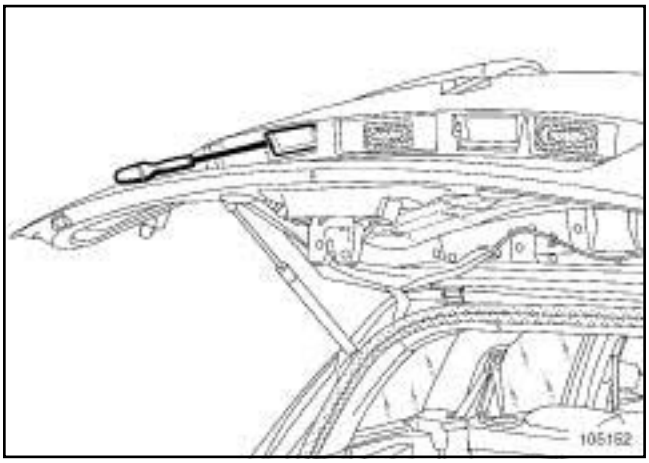

105152

Remove the number plate light mounting.

Remove the rear screen glass (see **54A, Windows, Rear screen glass: Removal - Refitting or Opening rear screen glass: Removal - Refitting**).

Remove the tailgate lock (see **52A, Non-side opening element mechanisms, Tailgate lock: Removal - Refitting**).

Tightening torques ▽	
tailgate mounting bolts	**10 Nm**

The removal and refitting of this component is a supplementary operation to the replacement of the bodywork or an entire rear wing panel.

> Note:
>
> Order an additional set of clips, available from the Parts Department.

For information on the replacement of each component attached to the tailgate, refer to their corresponding sections (see Contents).

Two operators are required to hold the tailgate.

Details of shut lines can be found in section **01C** .

> Note:
>
> Before final refitting, re-seal the hinge support area with filler mastic.

OPENING DURING A FAULT

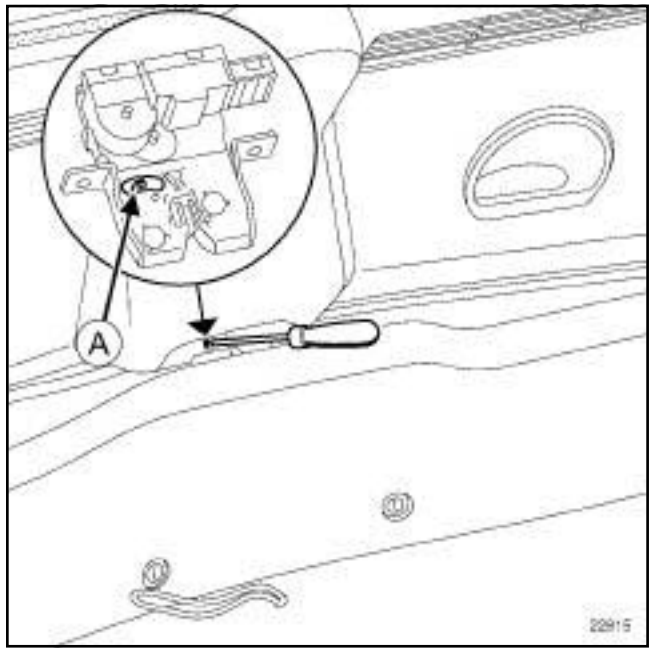

22815

> Note:
>
> In the event of an electrical fault, open the tailgate manually.
>
> Unlock the tailgate lock by pushing lug (**A**) with a screwdriver.
>
> This operation is performed from inside the vehicle.

REMOVAL

Disconnect the different electrical supply connectors.

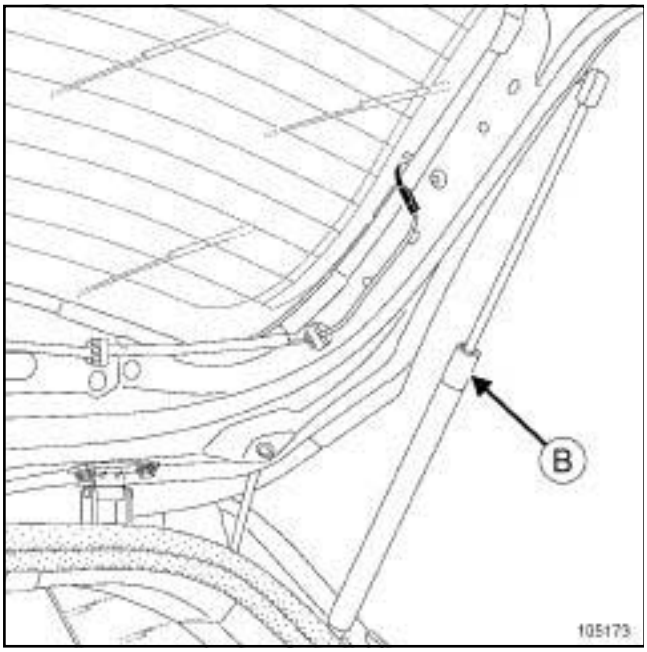

105173

Remove the tailgate struts (**B**) .

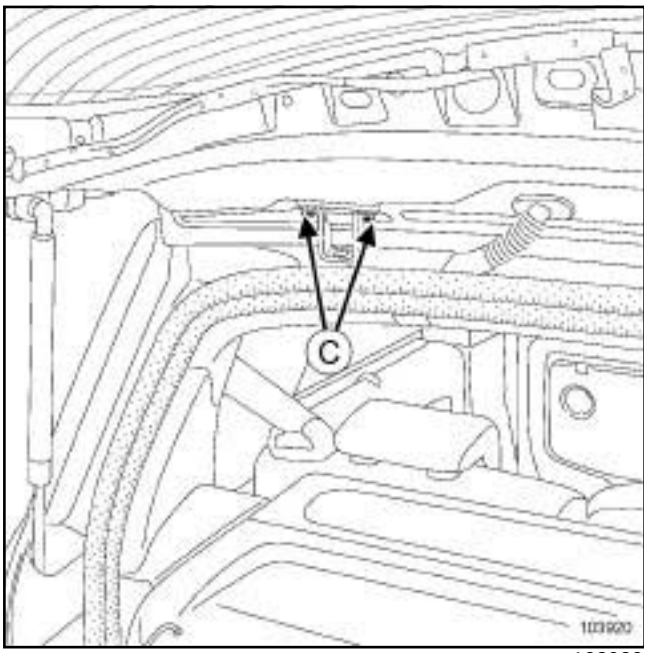

103920

Remove the tailgate by means of the upper hinge mounting bolts (**C**) .

REFITTING

Screw on the bolts ***(C)*** without tightening them and refit the tailgate (use the former paint and screw marks on the hinges to help you).

Torque tighten the **tailgate mounting bolts (10 Nm)** .

Connect the different electrical connectors.

The replacement of this part is a basic operation for a rear side impact.

In the procedure described below, you will only find descriptions of the connections which are specific to the part concerned.

Information on any additional parts will be provided in the respective sections (see Contents).

It is a removable plastic component.

COMPOSITION OF THE REPLACEMENT PART

Part supplied on its own (pre-primed).

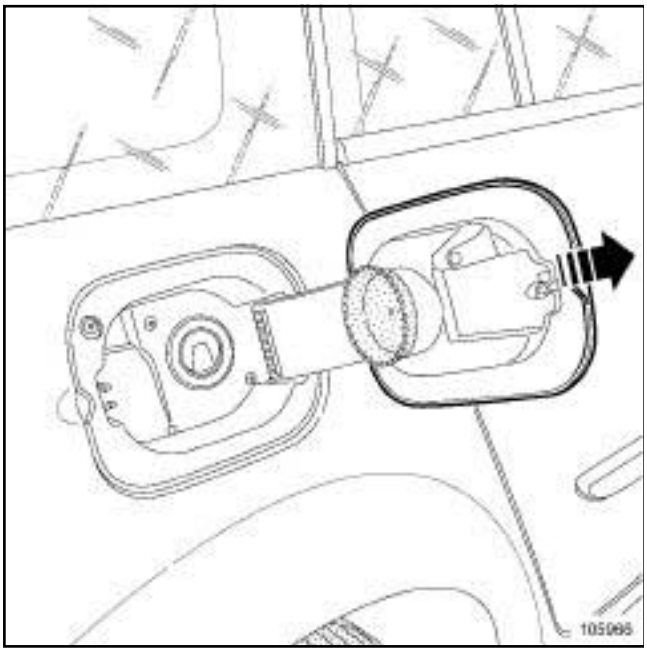

105966

REMOVAL

Press gently on the flap with your fingers to release it from the 4 clips (A) and pull it outwards.

REFITTING

Clip the fuel filler flap into place.

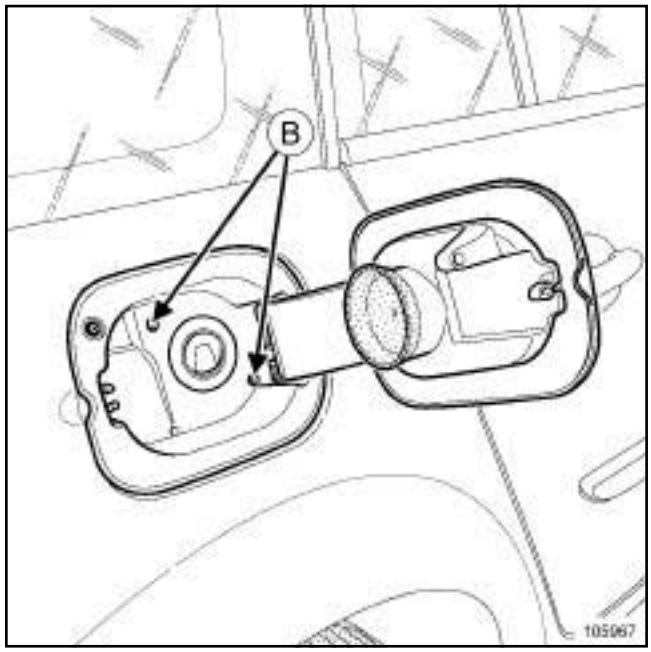

105967

REPAIR

The flap is made from NORYL GTX; for paint products, refer to **Technical Note 592A** .

Note:

The fuel filler flap cannot be adjusted during refitting; the bolts (**B**) are simply for removing the fuel filler neck.

REMOVAL

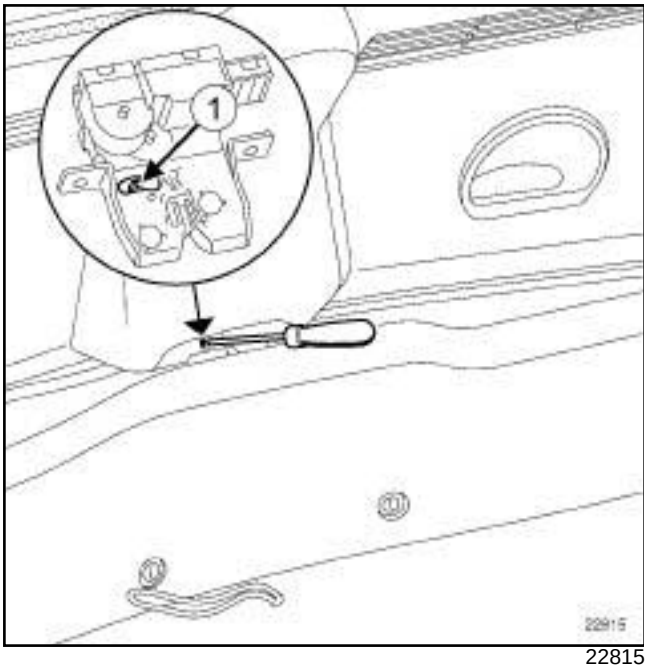

22815

> Note:
>
> If there is an electrical fault, open the tailgate manually. Unlock the tailgate lock by pushing lug (**1**) with a screwdriver.
>
> This operation is performed from inside the vehicle.

Remove the tailgate trim (see **73A, Non-side opening elements trim, Tailgate trim, Removal - Refitting**).

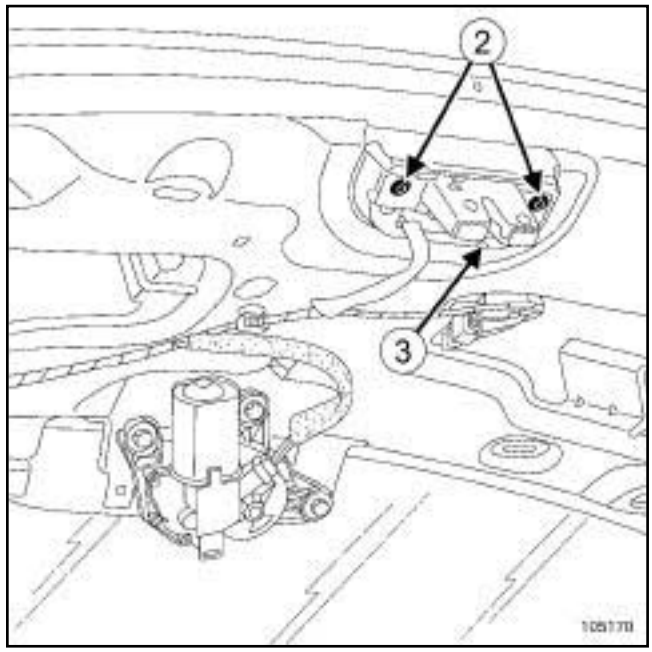

105170

Remove the bolts (**2**) .

Press on the clip (**3**) .

Remove the lock.

Disconnect the connector from the lock.

REFITTING

Connect the lock connector.

Refit:

- the lock,
- the tailgate trim (see **73A, Non-side opening elements trim, Tailgate trim, Removal - Refitting**).

REMOVAL

> Note:
>
> It is not necessary to remove the tailgate strip to perform this operation.

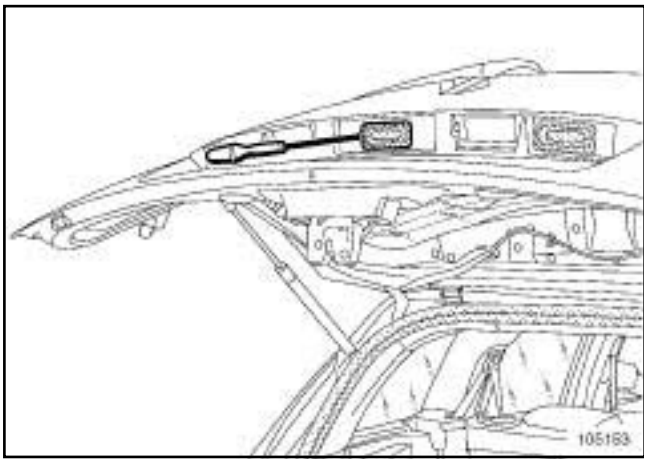

105153

Protect the edge of the opening control with masking tape.

Unclip the control using a flat-blade screwdriver.

Disconnect the connector.

REFITTING

Reconnect the connector.

Clip on the tailgate opening control.

REMOVAL

Remove:

- the wheel arch trim (see **71A, Body internal trim, Wheel arch trim: Removal - Refitting**).
- the rear quarter panel trim (see **71A, Body internal trim, Rear quarter panel trim: Removal - Refitting**).

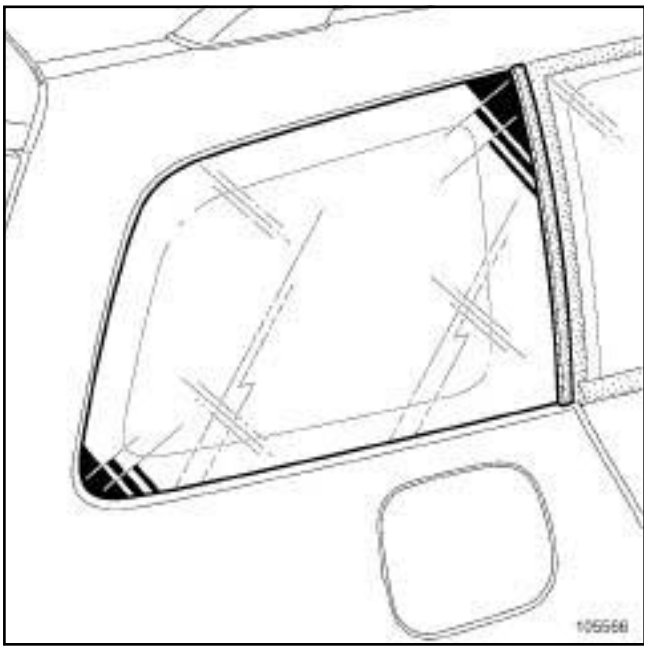

105566

Protect the edge of the quarter panel window using masking tape.

Cut the cement bead (this operation requires two people).

> Note:
>
> Protect the rear quarter glass preformed seal when cutting a cement bead for a bodywork operation.
>
> If replacement is required, the rear quarter glass comes supplied with a preformed seal.

REFITTING

For preparation and bonding, refer to **Technical Note 560A, General bonding procedures for windows and sunroof** .

> **WARNING**
>
> It is essential to use high modulus adhesive to bond the windows.

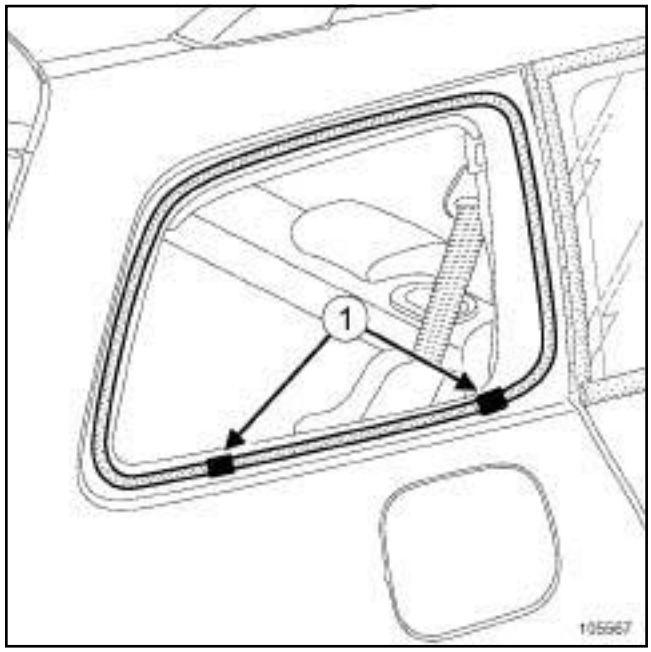

105567

Position the shims (**1**) .

Bond the rear quarter glass.

Balance up the clearances and shut lines.

Refit:

- the rear quarter panel trim (see **71A, Body internal trim, Rear quarter panel trim: Removal - Refitting**).
- the wheel arch trim (see **71A, Body internal trim, Wheel arch trim: Removal - Refitting**).

REMOVAL

Remove:

- the tailgate trim (see **73A, Non-side opening elements trim, Tailgate trim: Removal - Refitting**).
- the tailgate spoiler (see **56A, Exterior equipment, Tailgate spoiler: Removal - Refitting**).
- the rear screen wiper motor (see **Technical Note 3690A, 85A, Washing - Wiping, Rear screen wiper**).

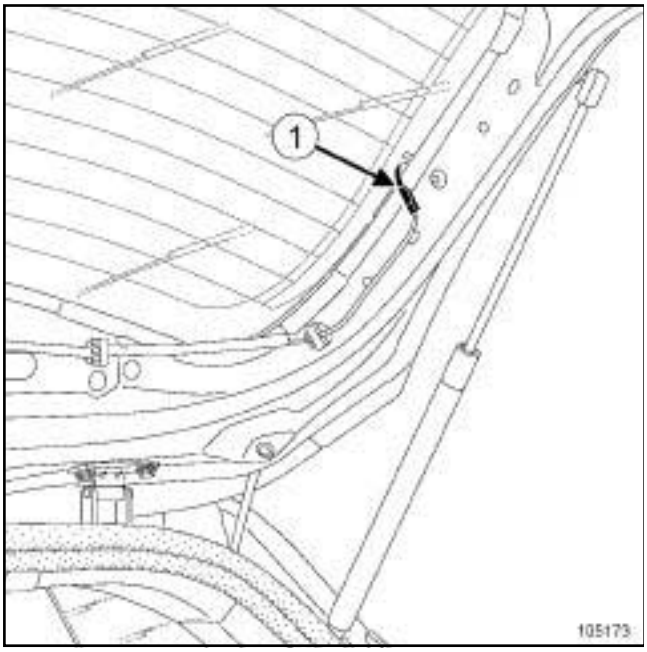

105173

Disconnect the two rear screen de-icing supply terminals (**1**) .

Position the heating circuit strips against the rear screen (to avoid damaging them when cutting the cement bead).

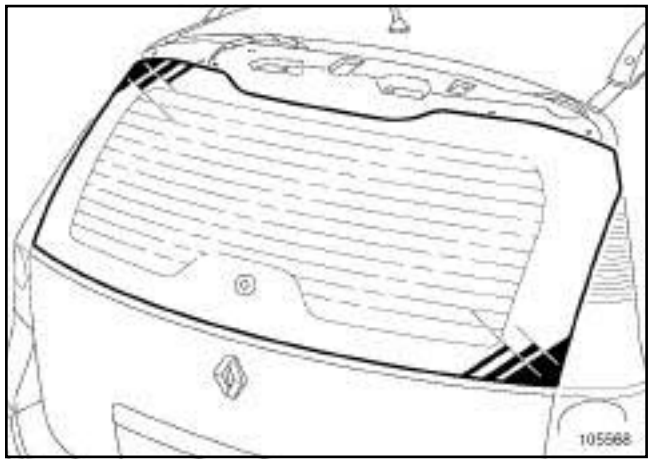

105568

Protect the rear screen surround with masking tape.

Cut the cement bead; this operation requires two people.

REFITTING

For preparation and bonding (see **Technical Note 560 A, General bonding procedure for windows and sunroof**).

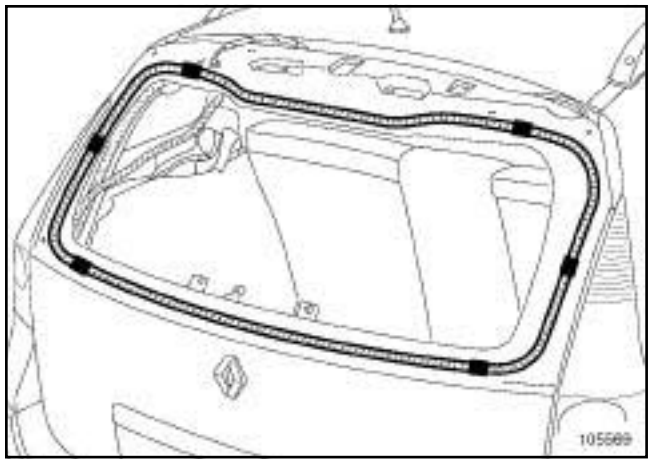

105569

Always replace the shims.

Bond the rear screen glass (this operation requires two people).

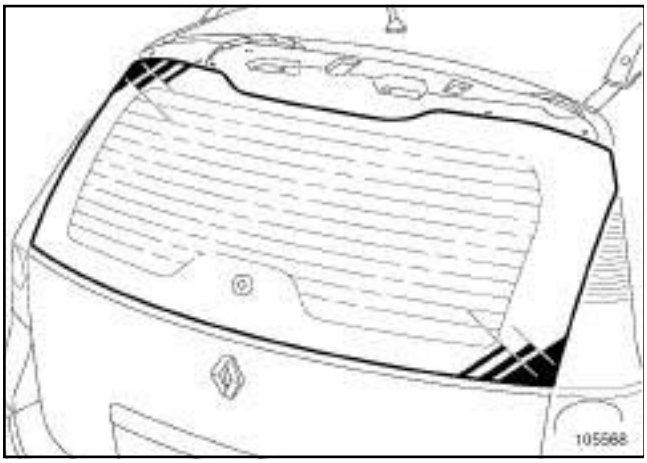

105568

Equal out the shut lines and flush-fittings:

- rear screen - roof,
- rear screen - quarter panel.

Refit:

- the rear screen wiper motor (see **Technical Note 3690A, 85A, Washing - Wiping, Rear screen wiper**),
- the tailgate spoiler (see **56A, Exterior equipment, Tailgate spoiler: Removal - Refitting**).
- the tailgate trim (see **73A, Non-side opening elements trim, Tailgate trim: Removal - Refitting**).

REMOVAL

Remove the tailgate trim (see **73A, Non-side opening elements trim, Tailgate trim: Removal - Refitting**).

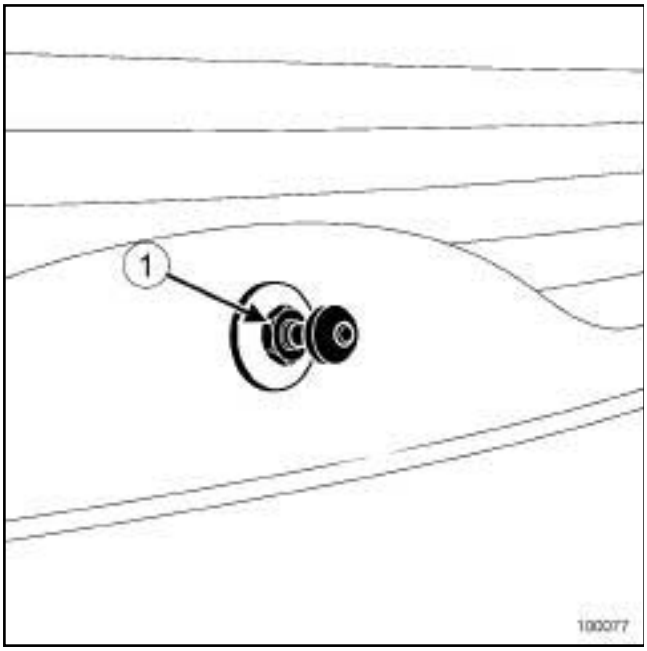

100077

Remove:

- the rear screen wiper arm (see **Technical Note 3690A, 85A, Wiping - Washing, Rear screen wiper**),
- the nut (**1**) .

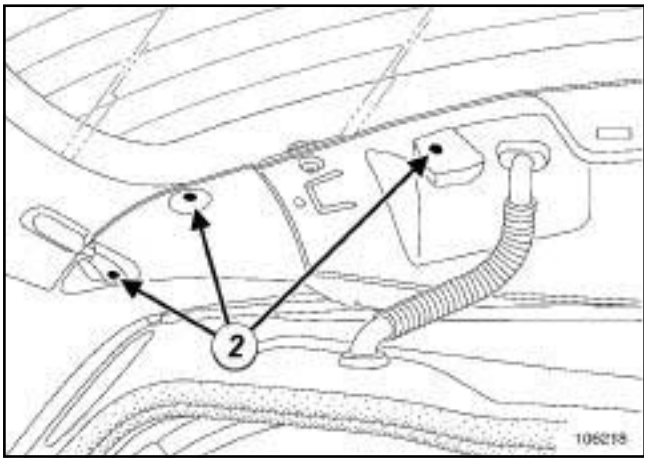

106218

Open the rear screen.

Remove the spoiler mounting bolts (**2**) .

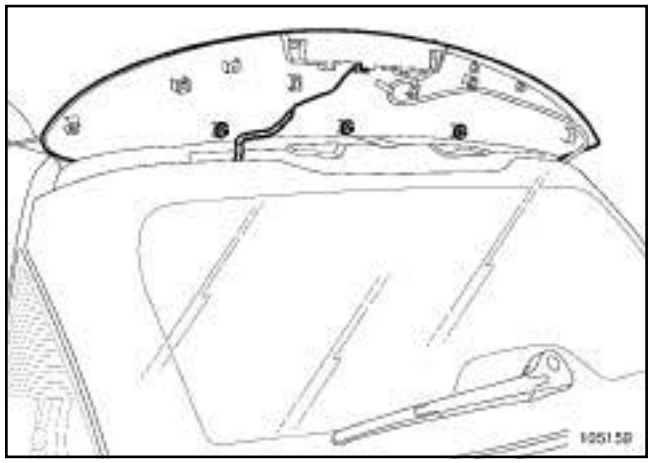

105159

Close the tailgate again.

Detach the spoiler upwards.

Disconnect:

- the high level brake light connector,
- the jet pipe.

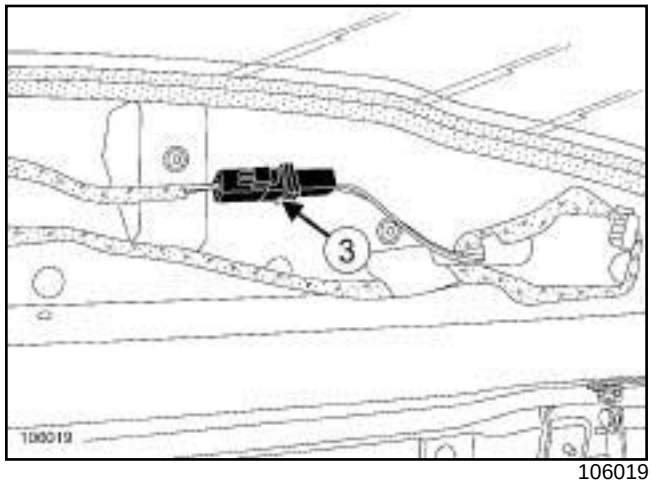

106019

Open the tailgate.

Disconnect the connector (**3**) .

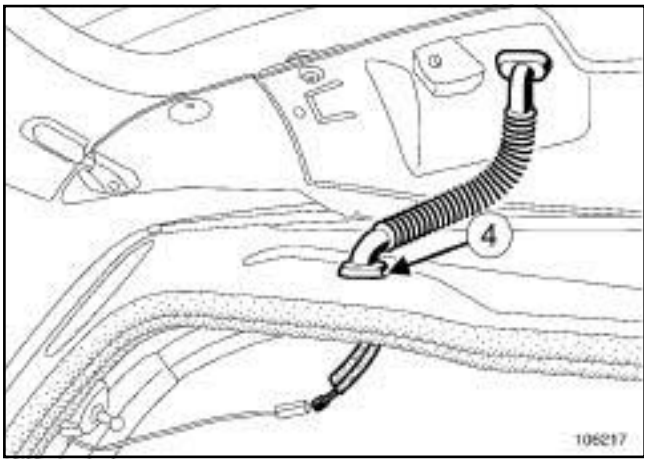

106217

Disconnect the de-icing supply terminals from the rear screen.

Unclip the blanking covers (**4**) .

Separate the tailgate harness.

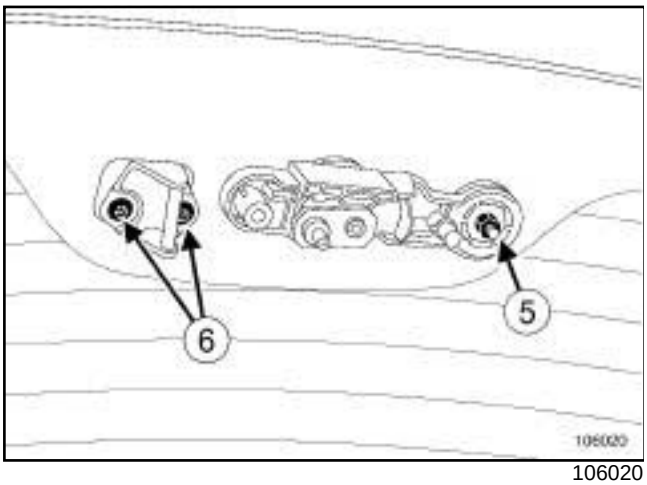

106020

Remove:

- the nut (**5**) ,
- the windscreen wiper mechanism,
- the bolts (**6**) ,
- the striker plate.

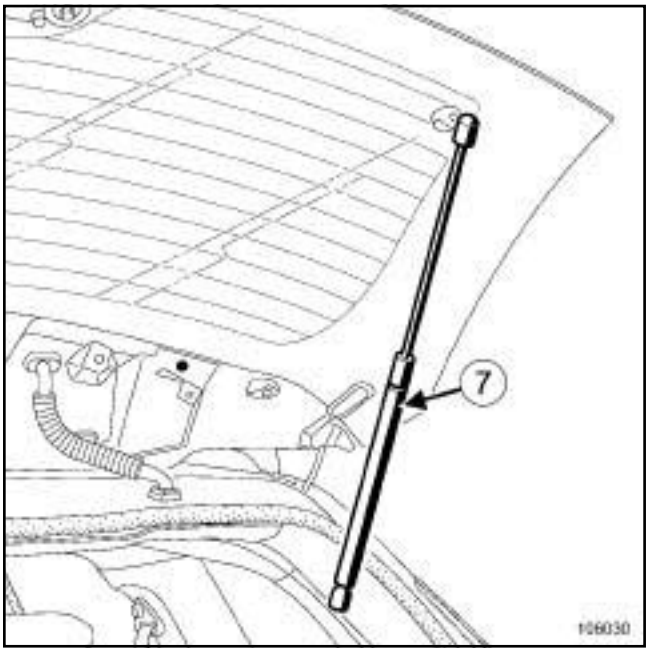

106030

Remove the struts (**7**) .

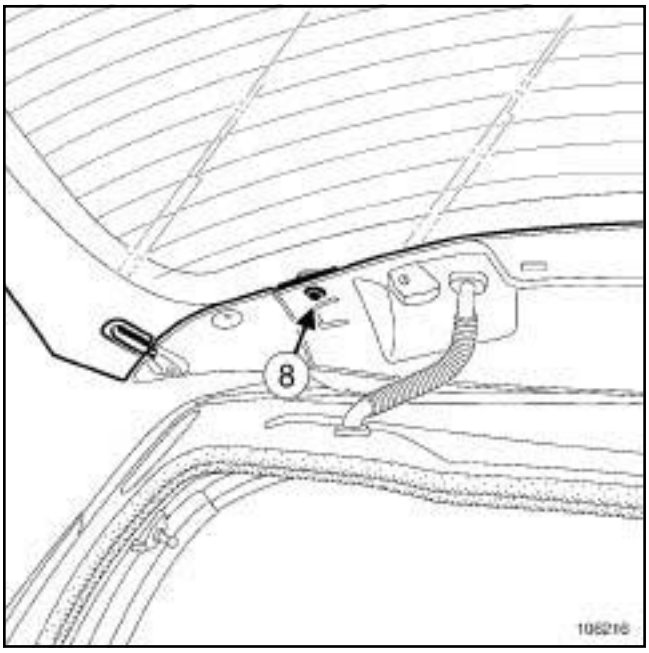

106216

Remove:

- the bolts (**8**) ,
- the opening rear screen window (this operation requires two people).

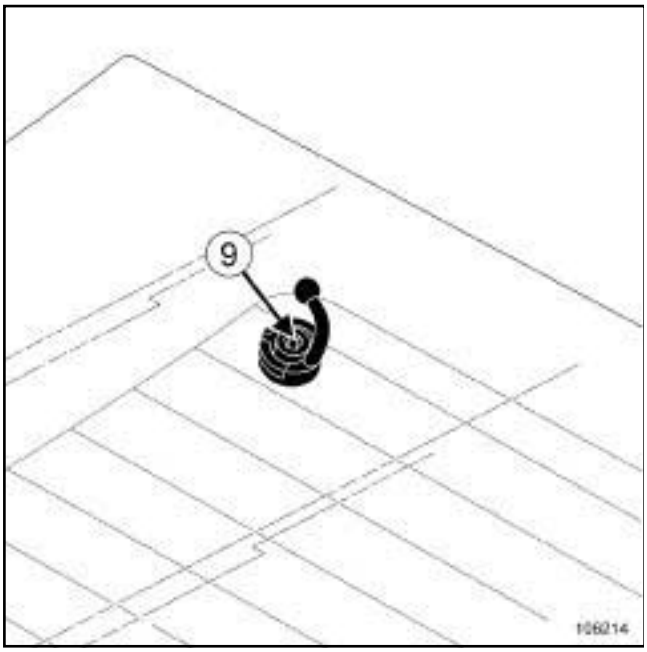

106214

Mark the position of the stops before removing them.

Remove:

- the bolts (**9**) ,
- the stops.

REFITTING

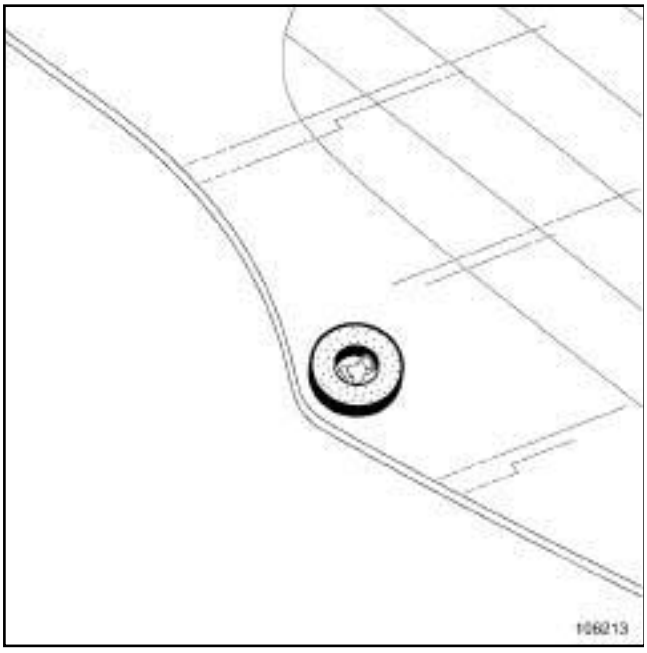

106213

Check that the seals are present before refitting the opening rear screen onto the tailgate.

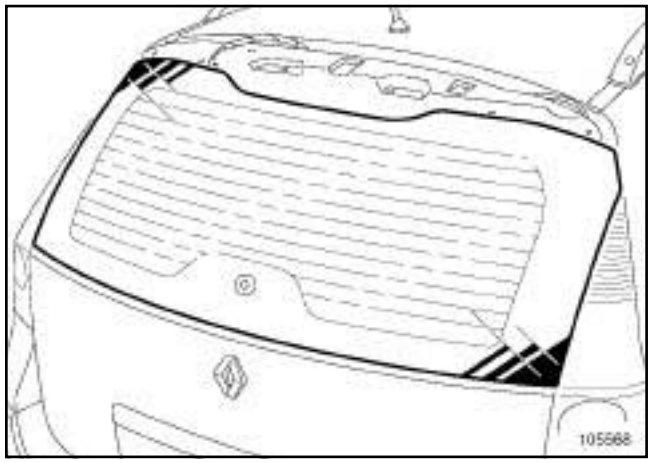

105568

Equal out the shut lines and shut lines.

Tighten the opening rear screen bolts.

Adjust the rear screen mechanism (see **Technical Note 3690A, 85A, Wiping - Washing, Rear screen wiper motor mechanism**).

Refit the tailgate trim (see **73A, Non-side opening elements trim, Tailgate trim: Removal - Refitting**).

REMOVAL

Position the vehicle on a two-post lift (see **02A, Lifting equipment, Underbody lift**).

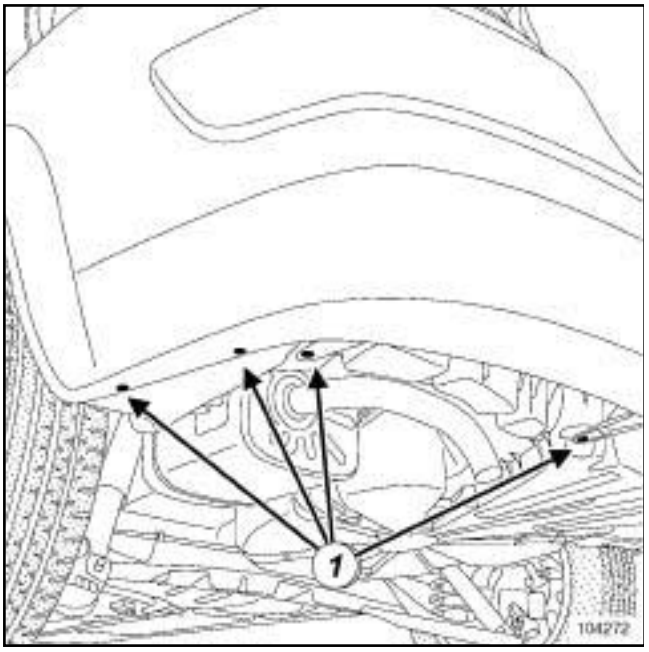

104272

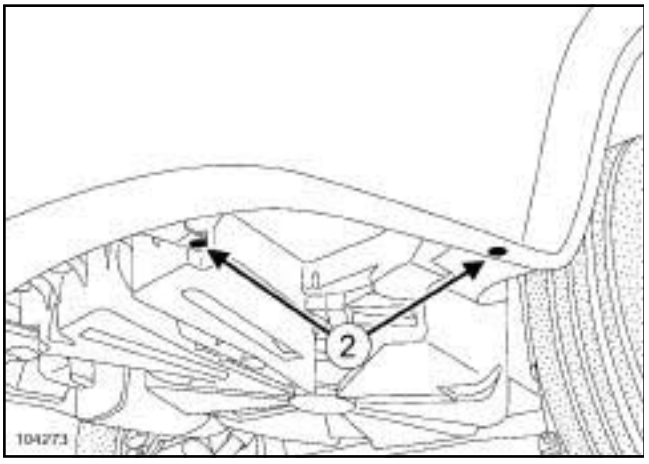

104273

Remove the lower bolts (**1**) and (**2**) .

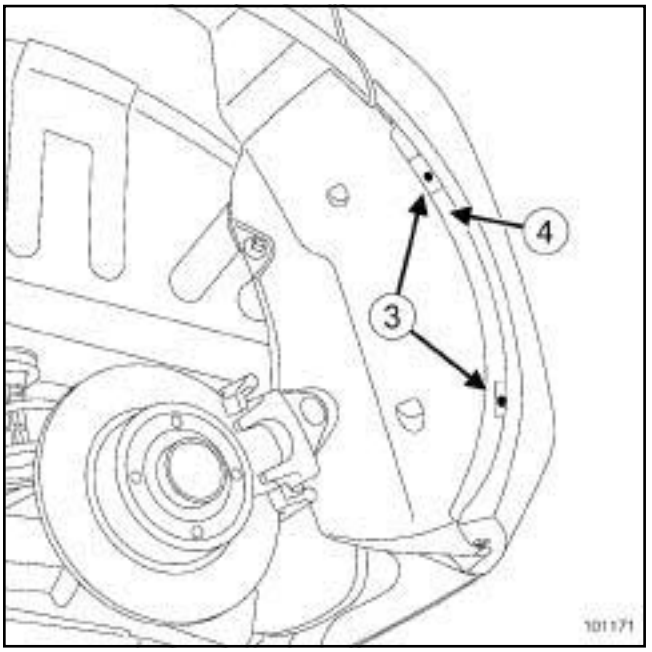

101171

Remove the bolts (**3**) from the wheel arch liner.

Pull away the wheel arch liners.

Remove the bumper mounting bolts (**4**) .

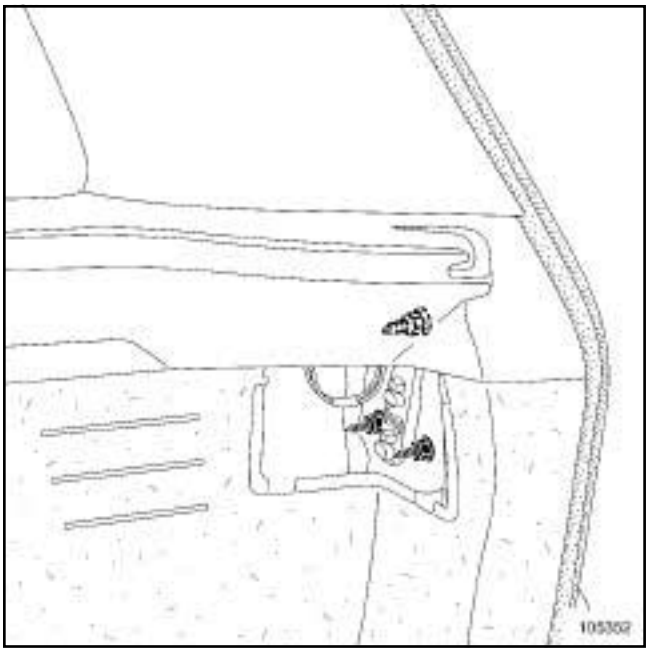

105352

Remove:

- the rear light mounting bolts,
- the rear lights.

Disconnect the connectors.

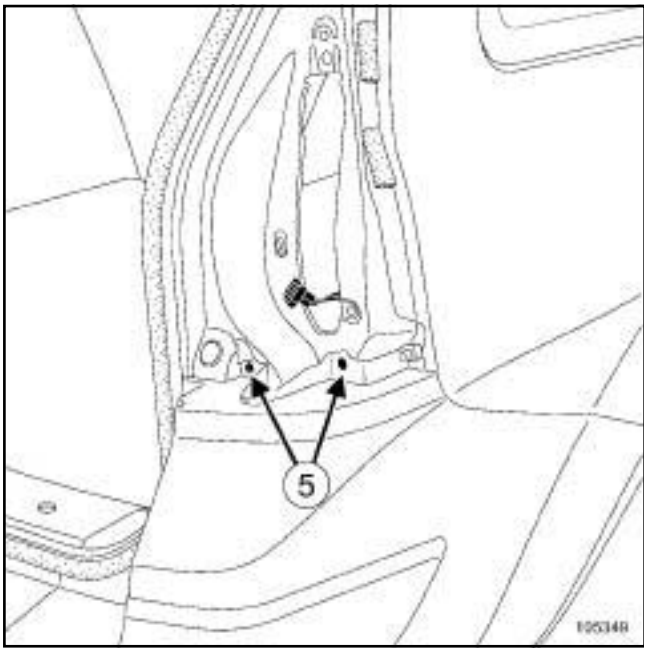

105349

Remove the bolts (**5**) .

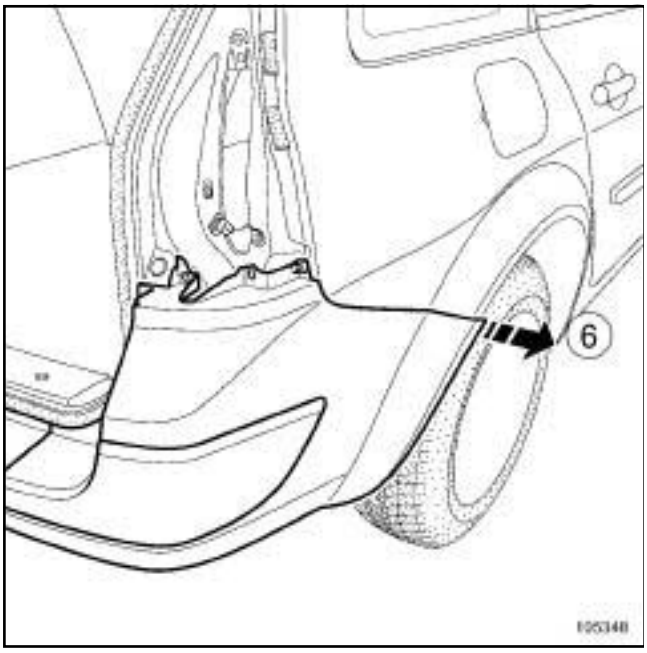

105348

Unclip the bumper at the side section (**6**) .

Remove the bumper (this operation requires two people).

REFITTING

Clip the bumper back in place.

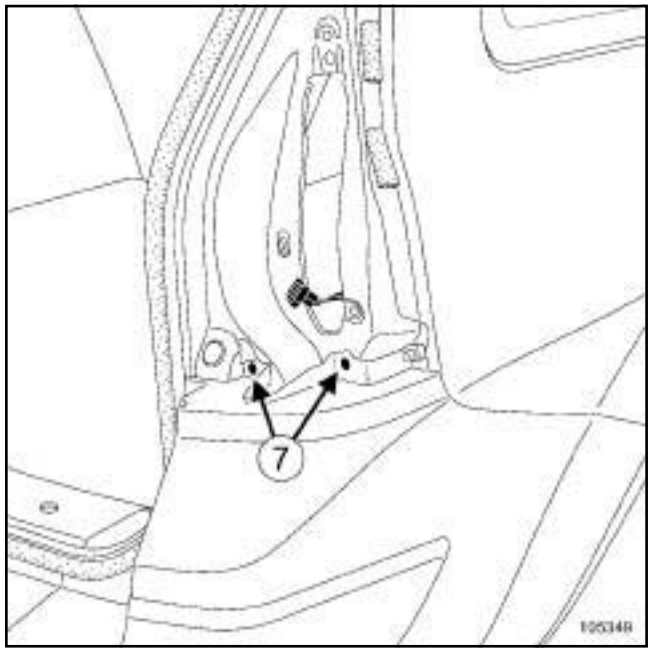

105349

Refit:

- the bolts (**7**) ,
- the rear lights,
- the rear light mounting bolts.

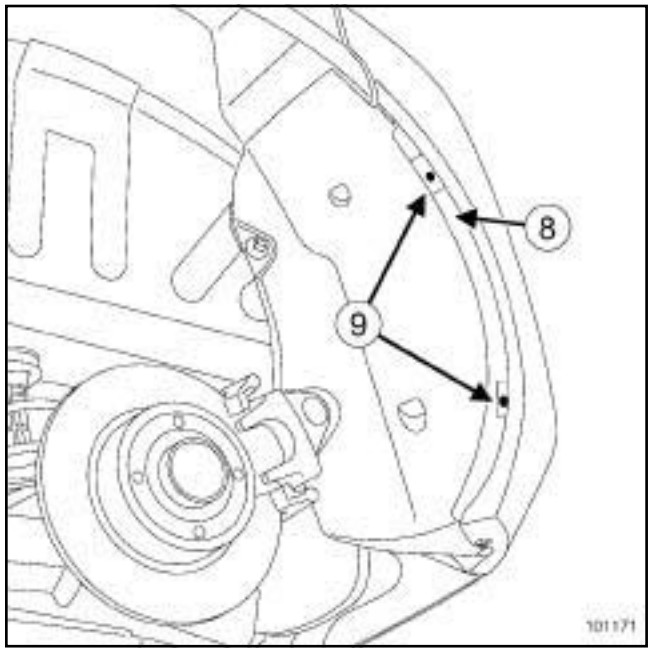

101171

Refit:

- the mounting bolts (**8**) ,
- the wheel arch liner,
- the bolts (**9**) ,
- the lower mounting bolts.

STRIPPING

Remove the rear bumper (see **55A, Exterior protection, Rear bumper: Removal - Refitting**).

I - SPECIAL NOTE ON REMOVING THE EXTERIOR BUMPER IMPACT STRIP

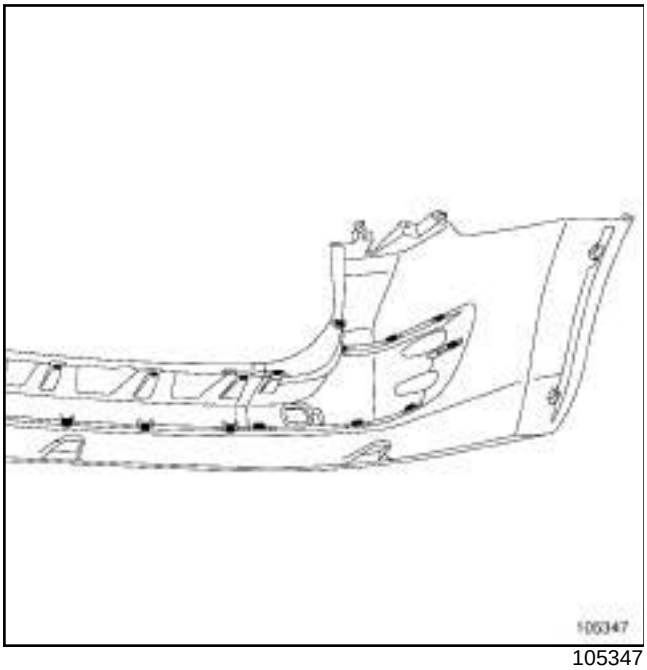

105347

Detach the clips.

Remove:

- the exterior strip,
- the centre strip.

II - SPECIAL NOTE ON REMOVING THE IMPACT ABSORBERS

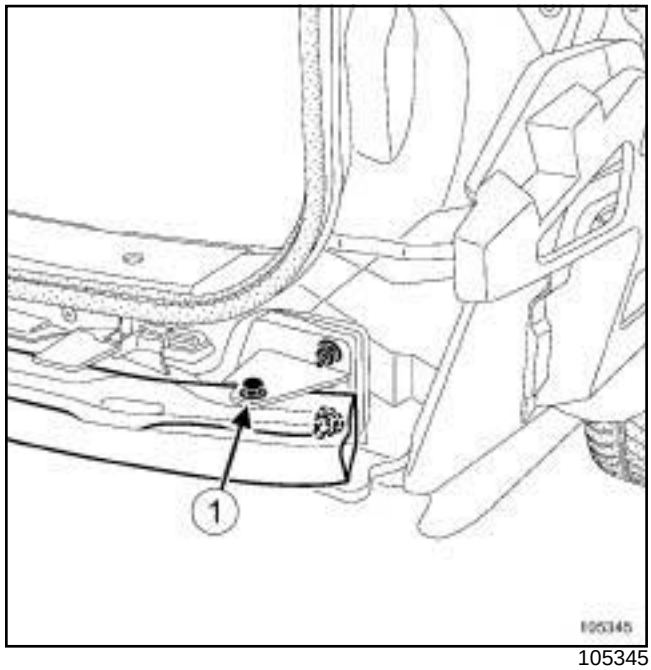

105345

Remove:

- the rear cross member nut (**1**) ,
- the rear cross member.

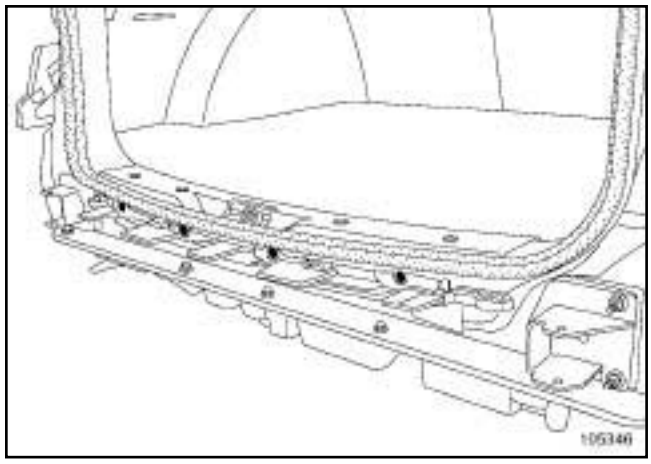

105346

Remove:

- the rivets,
- the centre mounting.

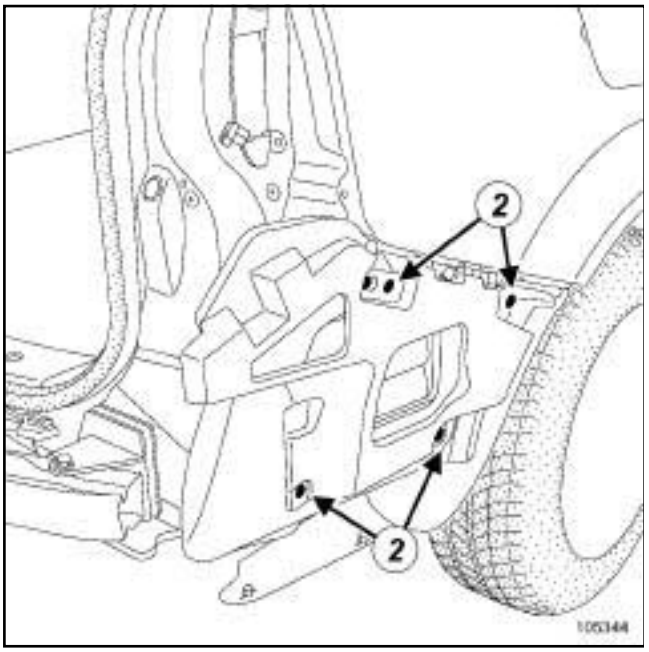

105344

Remove the rivets (**2**) .

Unclip the side mounting.

REASSEMBLING

I - SPECIAL NOTE ON REFITTING THE EXTERIOR BUMPER IMPACT STRIP

Clip the impact strips back in place.

Refit the rear bumper (see **55A, Exterior protection, Rear bumper: Removal - Refitting**)

II - # SPECIAL NOTE ON REFITTING THE IMPACT ABSORBERS

Refit:

- the side support,
- the rivets
- the centre support,
- the rivets,
- the rear cross member,
- the rear cross member nut,
- the rear bumper (see **55A, Exterior protection, Rear bumper: Removal - Refitting**)

REMOVAL

Remove the tailgate trim (see **55A, Non-side opening elements trim, Tailgate trim: Removal - Refitting**).

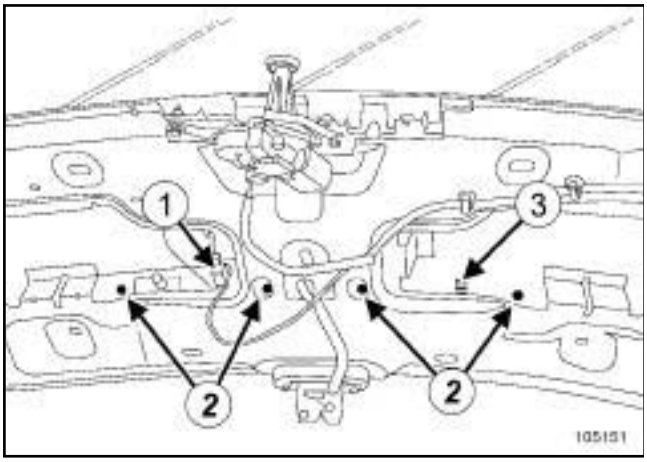

105151

Disconnect the strip wiring harness connector (**1**) .

Remove the nuts (**2**) .

Unclip the strip (**3**) .

REFITTING

Clip the panel.

Fit the mounting nuts.

Connect the wiring harness.

Refit the tailgate trim (see **55A, Non-side opening elements trim, Tailgate trim: Removal - Refitting**).

REMOVAL

Note:

The roof trim strips vary, depending on equipment level (sunroof).

Removal is the same for both versions.

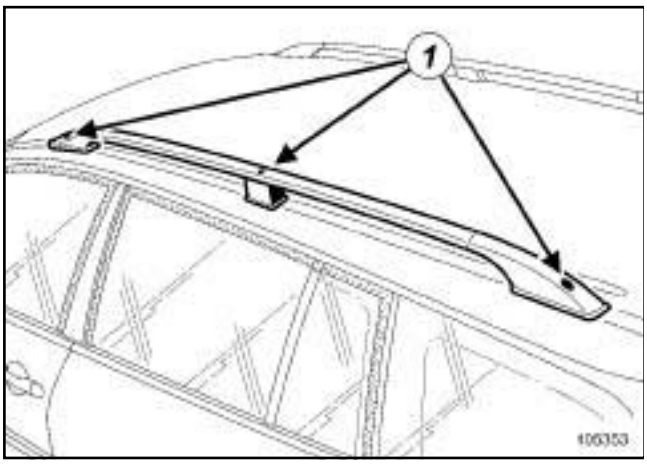

105353

Remove:

- the blanking covers (**1**) ,
- the mounting bolts,
- the roof bars (depending on the equipment level).

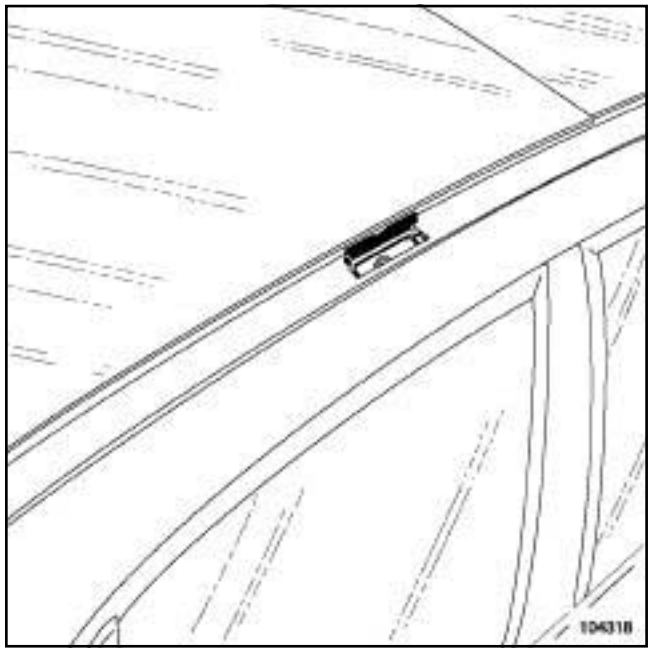

104318

Note:

The roof bar mounting access panels may be replaced and are available individually from the **Parts Department** .

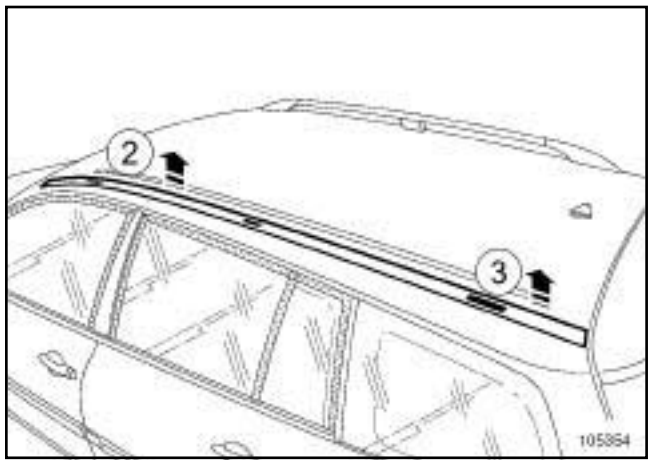

105354

Unclip the roof trim strip (**2**) and (**3**) .

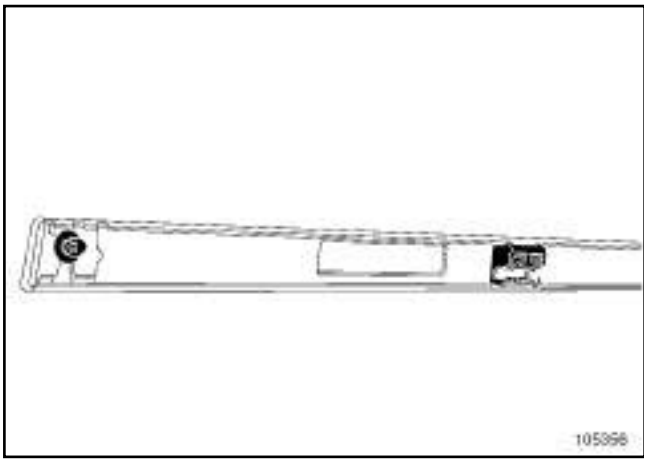

105356

Note:

The trim strip retaining clips may be replaced and are available individually from the **Parts Department** .

REFITTING

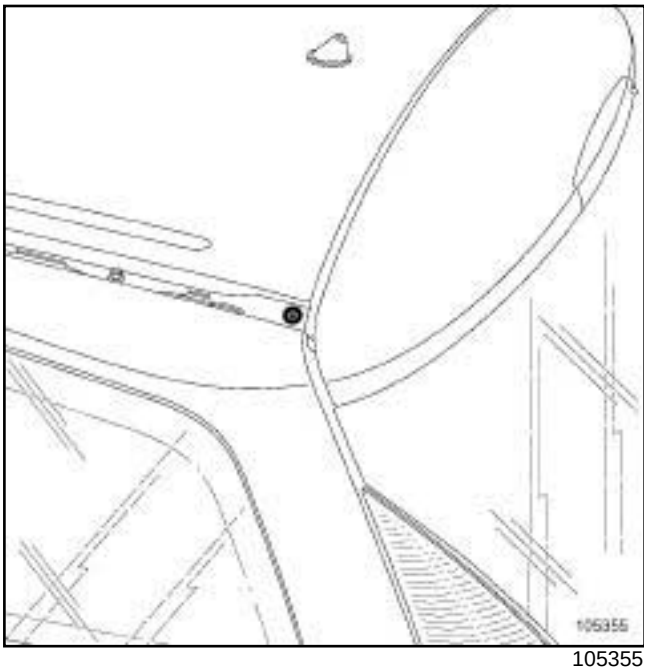

105355

Position the trim strip at the rear.

Insert the front section of the trim strip under the windscreen seal.

Clip the trim strip along its whole length.

Refit:

- the roof bars (depending on the equipment level),
- the mounting bolts.

REMOVAL

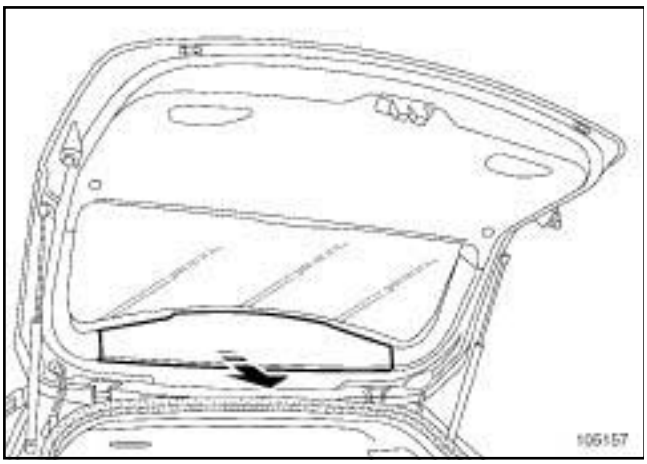

105157

Unclip the centre trim.

I - SPECIAL NOTE ON REMOVING THE SPOILER ON VERSIONS WITH FIXED REAR SCREEN

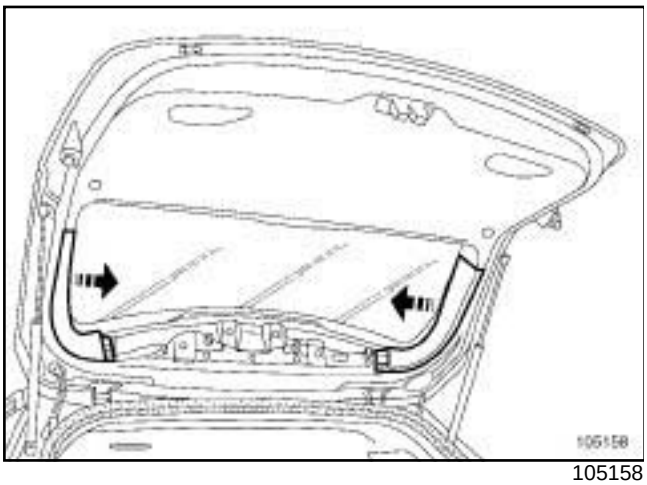

105158

Unclip the side trim panels.

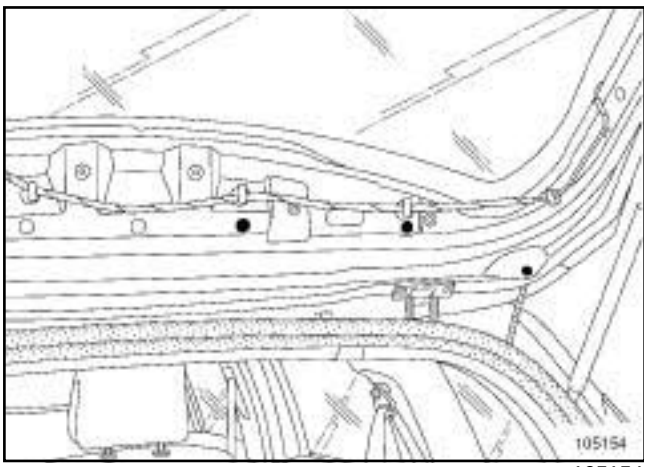

105154

Remove the spoiler mounting bolts.

II - SPECIAL NOTE ON REMOVING THE SPOILER ON VERSIONS WITH OPENING REAR SCREEN

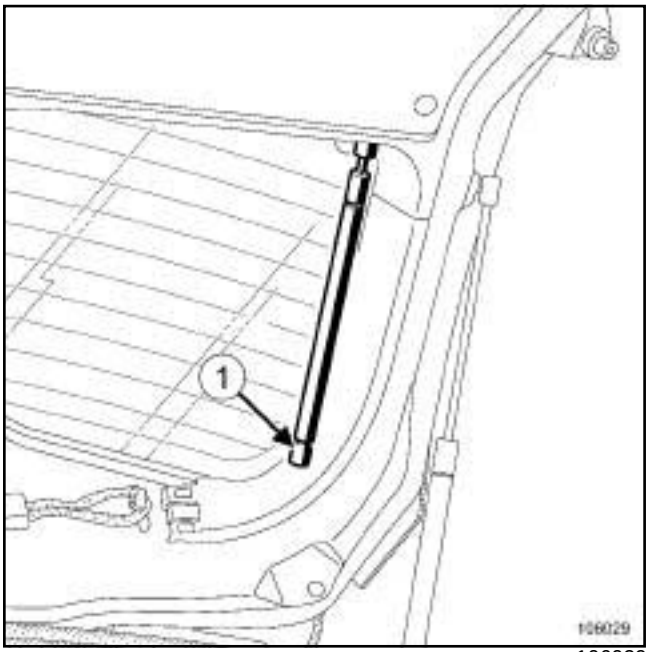

106029

Remove the rear screen struts, starting at section (**1**)
.

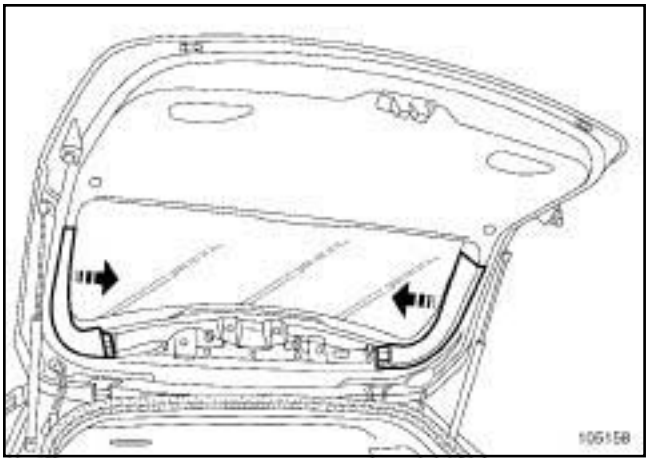

105158

Unclip the side trim panels.

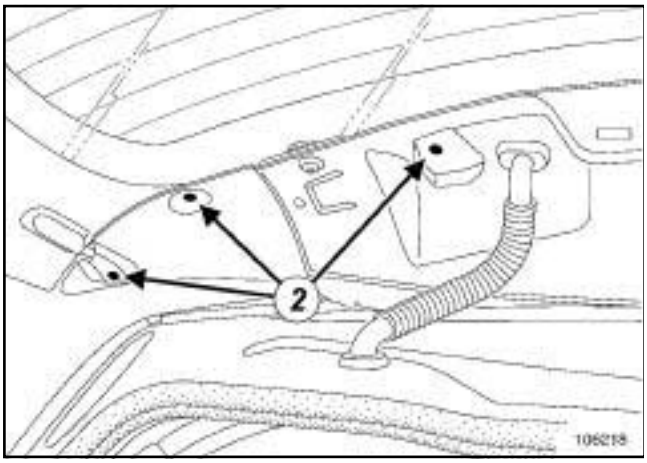

106218

Open the rear screen.

Remove the bolts (**2**) .

> Note:
>
> The remainder of the removal procedure is identical for both versions.

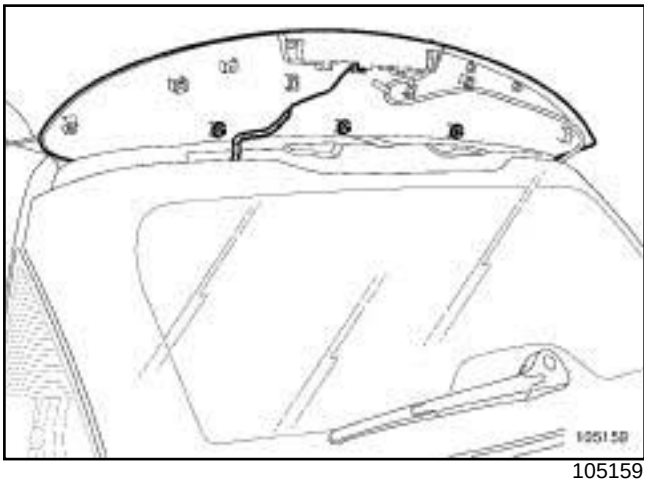
105159

Detach the spoiler upwards.

Disconnect the high level brake light connector.

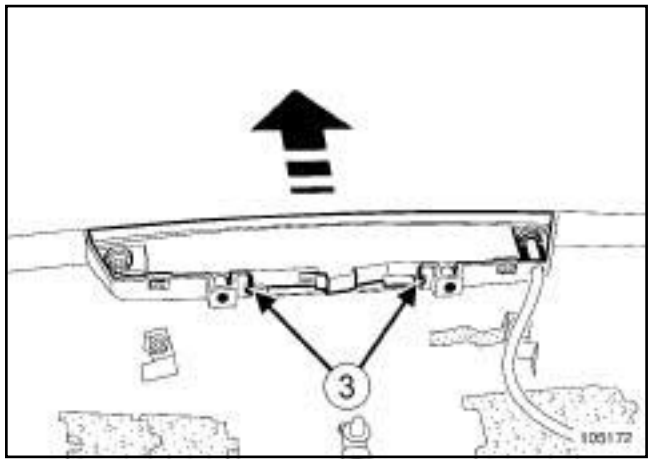

105172

Remove:

- the bolts,
- the clips (**3**) .

Unclip the jet pipe.

Remove:

- the jet,
- the high level brake light.

REFITTING

Clip the high level brake light onto the spoiler.

Refit:

- the jet,
- the jet pipe,
- the high level brake light mounting bolts.

Connect the high level brake light connector.

Clip the spoiler onto the vehicle.

Refit:

- the spoiler mounting bolts,
- the side trim panels,
- the struts (depending on the equipment level),
- the centre trim.

Equipment required
diagnostic tool

Tightening torques ▽	
inertia reel mounting bolt	**21 Nm**
seat belt mounting bolts	**21 Nm**

REMOVAL

IMPORTANT
Before carrying out any work on or near safety system components, it is essential to lock the airbag computer using the diagnostic tool. When this function is activated, all the trigger lines are inhibited and the airbag warning light on the instrument panel is lit continuously (ignition on).

IMPORTANT
Handling pyrotechnic systems (airbags or pretensioners) near to a source of heat or flame is forbidden: there is a risk of triggering the airbags or pretensioners.

IMPORTANT
After a pyrotechnic component has been triggered, certain parts must be replaced (see 88C Airbags and pretensioners, Airbags and pretensioners: Precautions during repair).

Lock the airbag computer using the **diagnostic tool** (see **88C, Airbags and pretensioners, Airbag computer locking procedure**).

Disconnect the battery starting with the positive terminal (see **80A, Battery: Removal - Refitting**).

Move the front seat as far forward as possible.

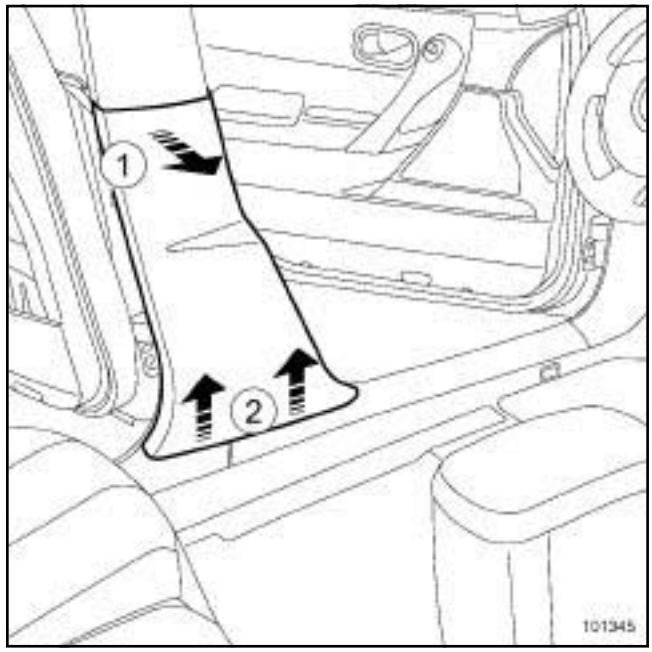

101345

Unclip the upper section of the trim (**1**) .

Remove the trim (**2**) .

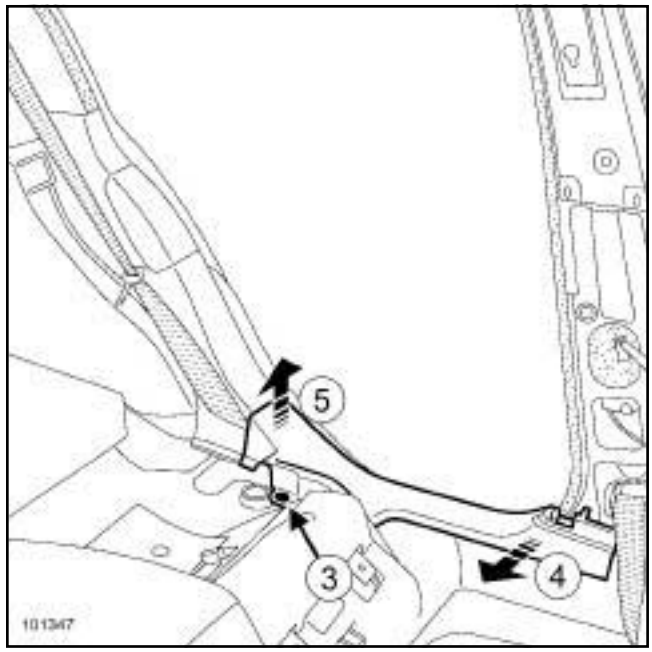

101347

Remove the bench seat base

Unclip:

- the clip (**3**) using an unclipping tool

- the trim at (**4**) and (**5**) .

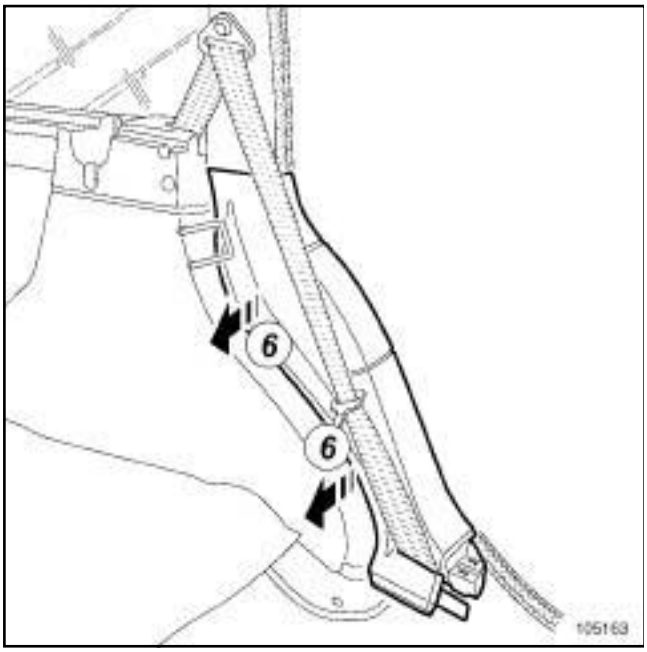

105163

Unclip trim (**6**) .

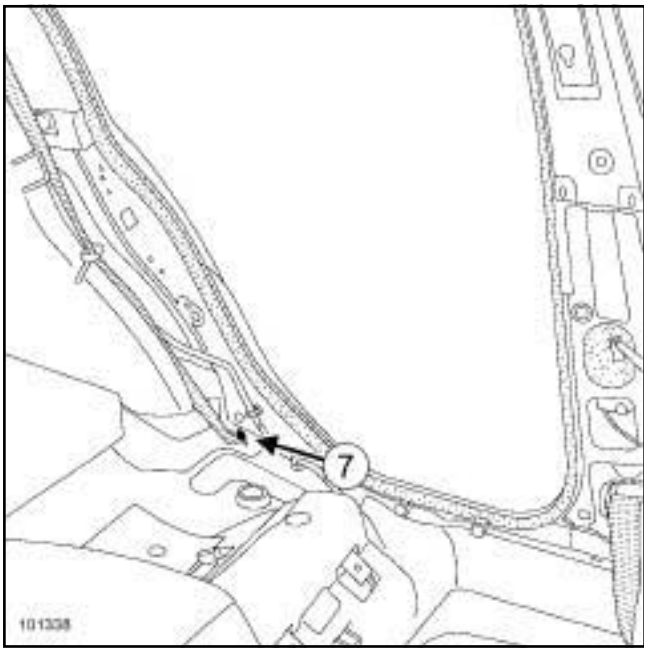

101338

Remove the seat belt lower mounting bolt (**7**) .

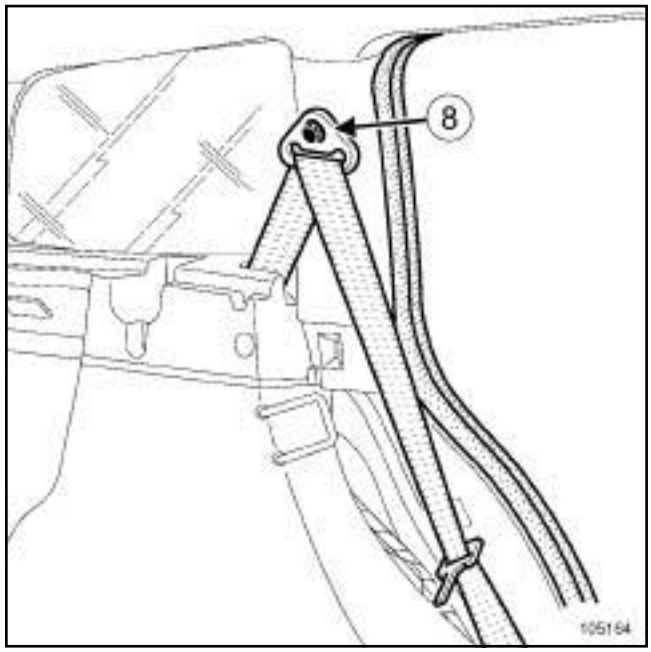

105164

Remove:

- the bolt (**8**) ,
- the seat belt guide.

Partially remove the door seal.

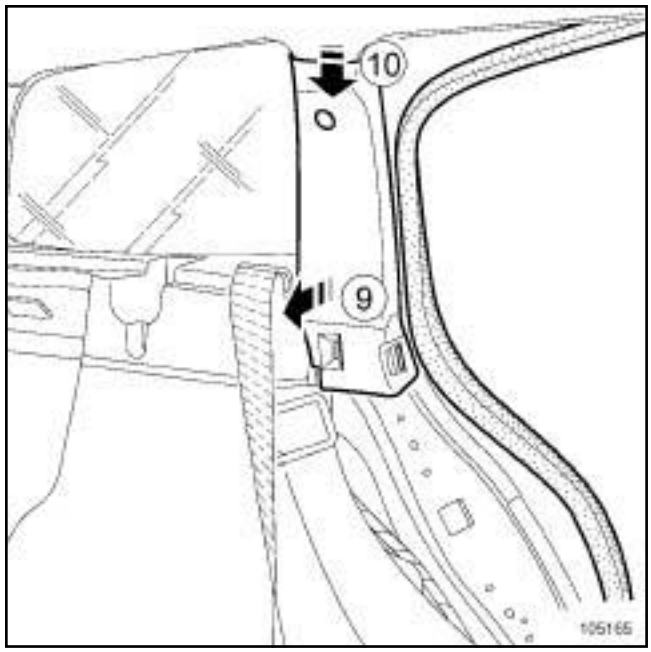

105165

Unclip the C-pillar trim (**9**) and (**10**) .

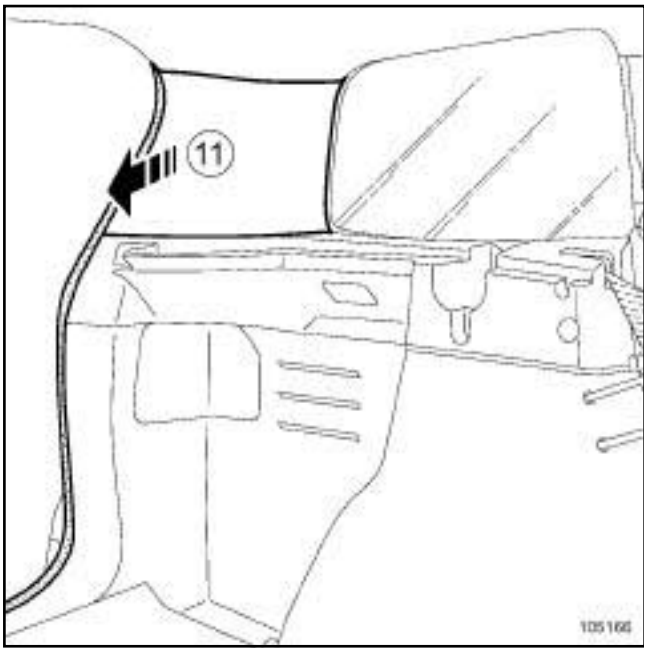

105166

Partially remove the luggage compartment seal.

Unclip the rear quarter panel trim (**11**) .

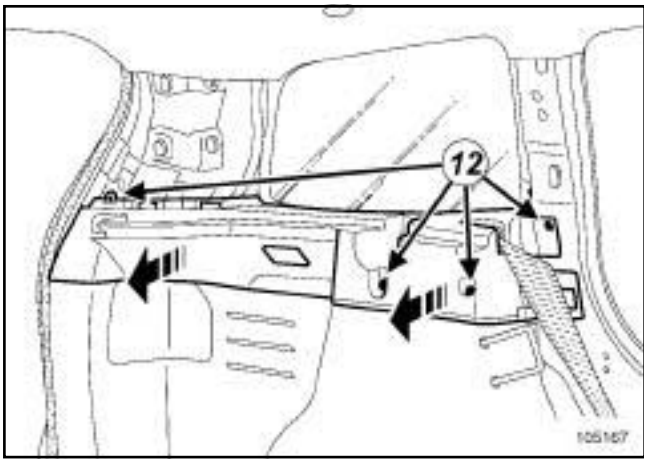

105167

Unclip the luggage compartment light.

Disconnect the luggage compartment lighting connector.

Remove the bolts (**12**) .

Release the rear parcel shelf trim.

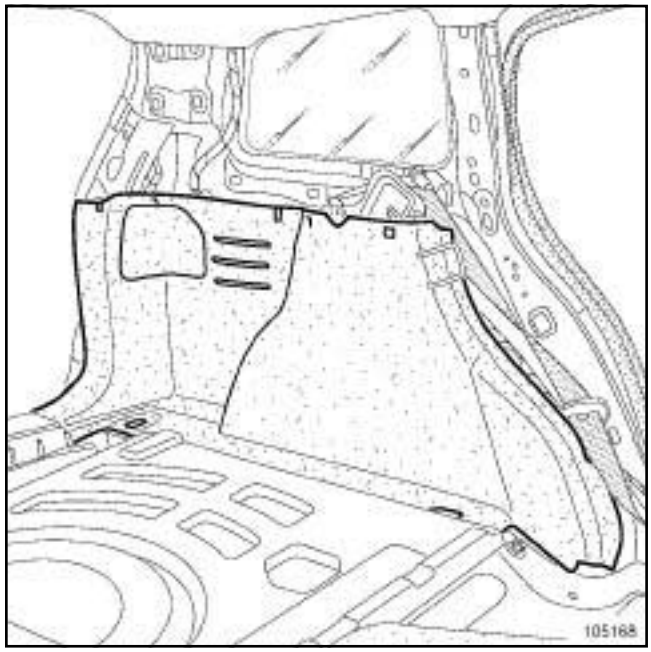

105168

Pull the inner trim off the wheel arch.

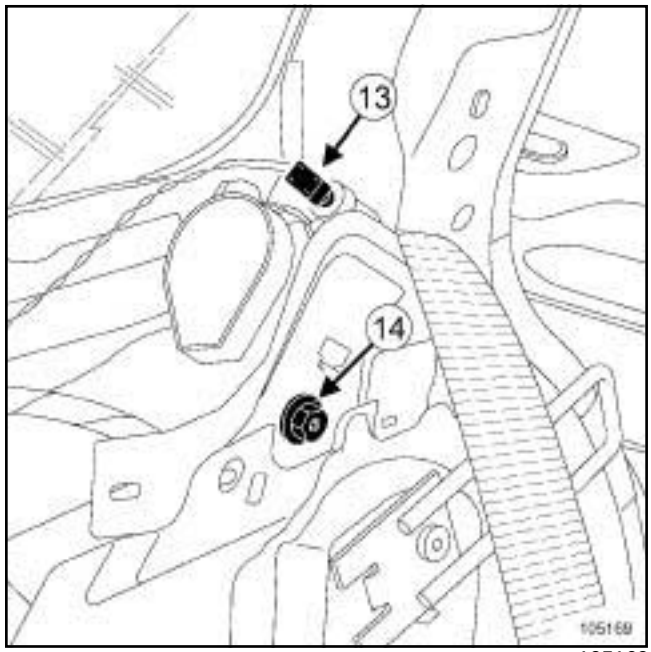

105169

Disconnect the connector (**13**) .

Remove:

- the inertia reel bolt (**14**) ,

- the inertia reel.

REFITTING

Refit the inertia reel.

Tighten to torque the **inertia reel mounting bolt (21 Nm)** .

Refit:

- the connector on the inertia reel,
- the rear parcel shelf trim,
- the bolts,
- the luggage compartment light connector,
- the rear quarter panel trim,
- the luggage compartment seal,
- the C-pillar trim,
- the seat belt guide,
- the seat belt lower mounting.

Torque tighten the **seat belt mounting bolts (21 Nm)** .

Refit:

- the rear door sill upper trim,
- the rear door sill trim,
- the rear bench seat base.
- the B-pillar lower trim.

Connect the battery, starting with the positive terminal (see **80A, Battery: Removal - Refitting**).

Unlock the airbag computer using the **diagnostic tool** (see **88C, Airbags and pretensioners, Airbag computer locking procedure**).

Luggage compartment carpet: Removal - Refitting

REMOVAL

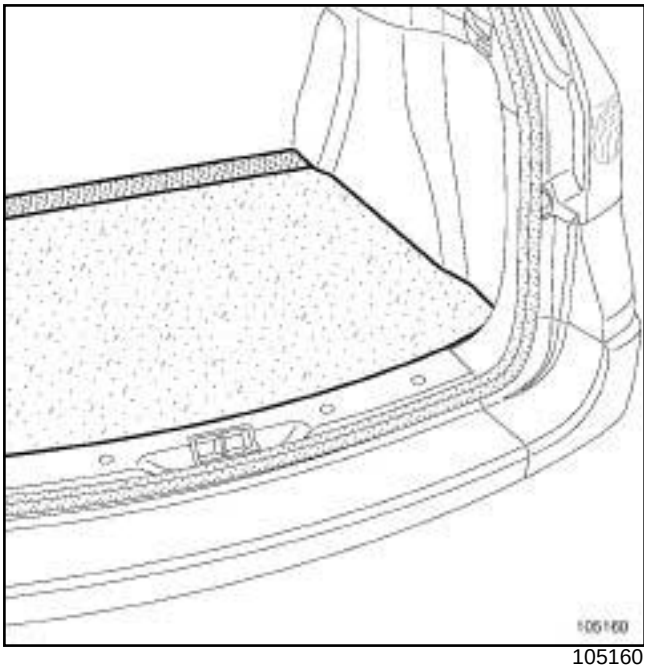

105160

Remove:

- the velcro strip,
- the christmas tree clips,
- the luggage compartment carpet.

REFITTING

Remove:

- the luggage compartment carpet,
- the velcro strip,
- the christmas tree clips.

Equipment required
diagnostic tool

Tightening torques ▽	
seat belt mounting bolts	**21 Nm**

REMOVAL

IMPORTANT
Before carrying out any work on or near a safety system component, lock the airbag computer using the **diagnostic tool** . When this function is activated, all the trigger lines are disabled and the airbag instrument panel warning light is lit when the ignition is switched on.

IMPORTANT
Handling the pyrotechnic systems (airbags or pretensioners) near to a heat source or flame is prohibited: there is a risk of triggering the airbags or pretensioners.

Lock the airbag computer using the **diagnostic tool** (see **88C, Airbags and pretensioners, Airbag computer locking procedure**).

Disconnect the battery starting with the positive terminal (see **80A, Battery: Removal - Refitting**).

Move the front seat as far forward as possible.

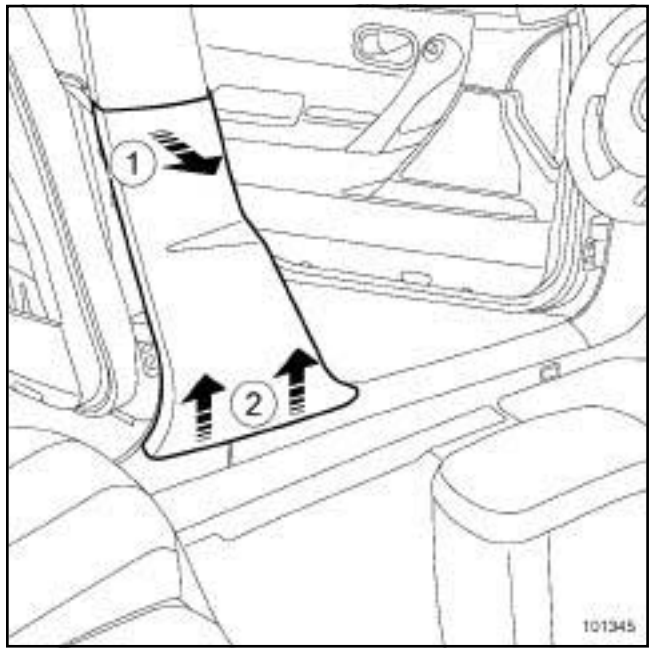

101345

Unclip the upper section of the trim (**1**) .

Remove the trim (**2**) .

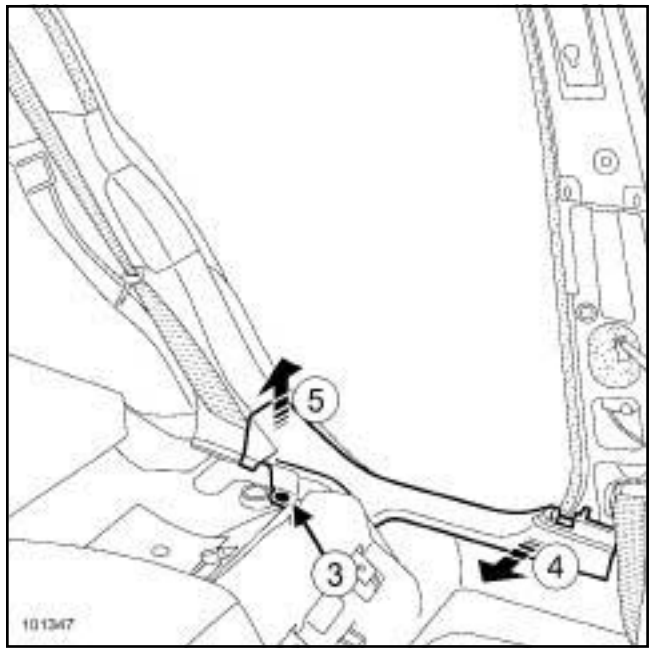

101347

Remove the bench seat base.

Unclip:

- the clip (**3**) using an unclipping tool,

- the trim at (**4**) and (**5**) .

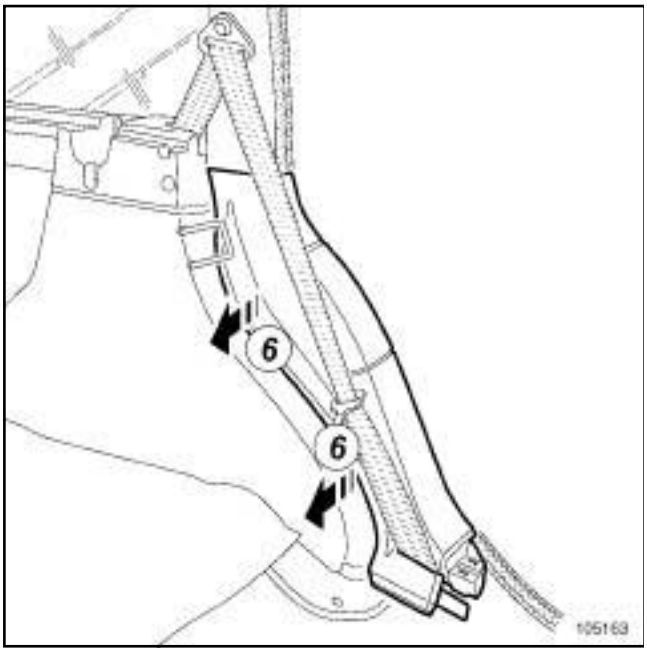

105163

Unclip the trim at (**6**) .

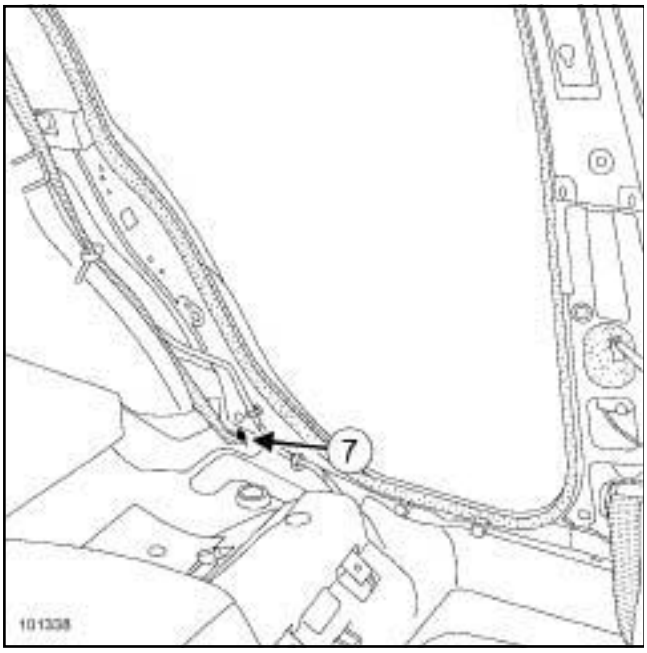

101338

Remove the seat belt lower mounting bolt (**7**) .

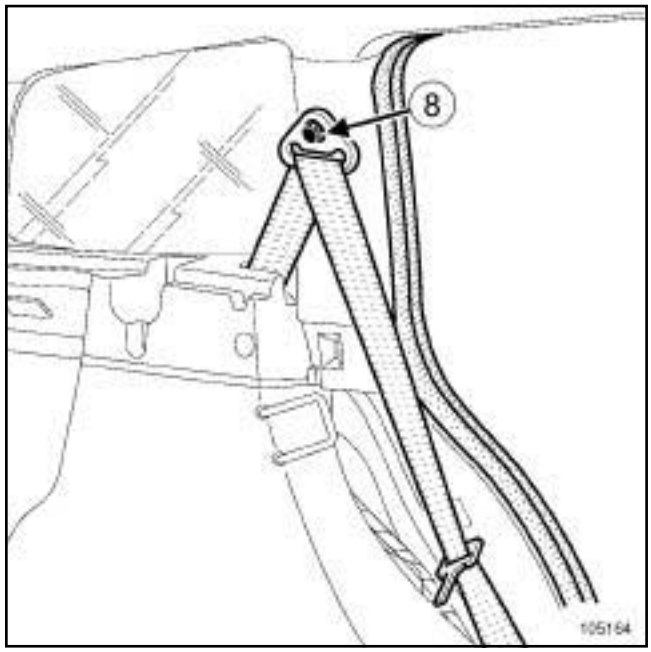

105164

Remove:

- the bolt (**8**) ,
- the seat belt guide.

Partially remove the door seal.

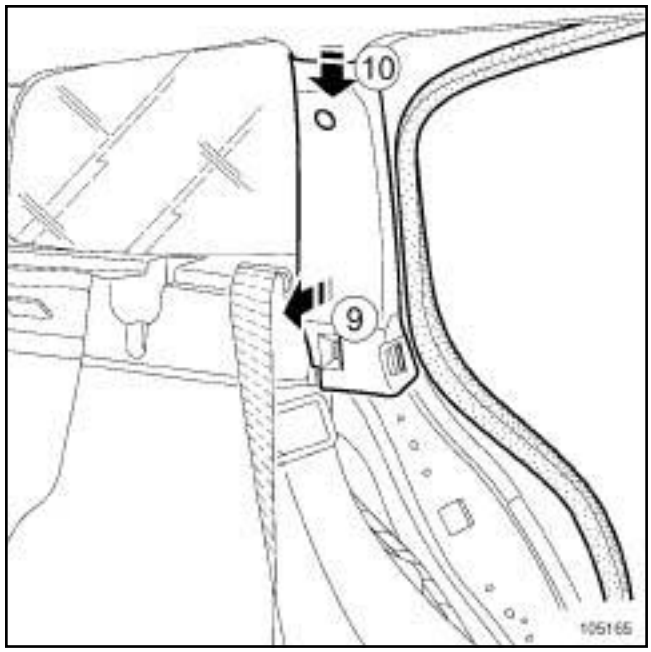

105165

Unclip the C-pillar trim (**9**) and (**10**) .

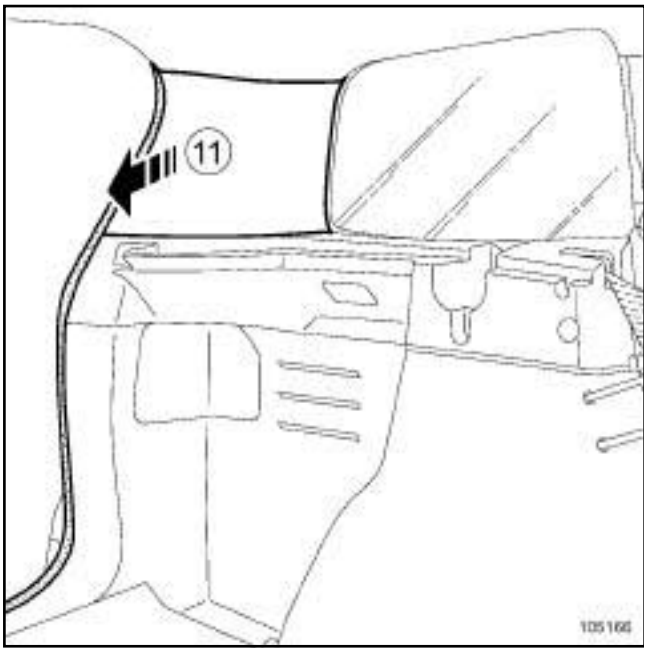

105166

Partially remove the luggage compartment seal.

Unclip the rear quarter panel trim (**11**) .

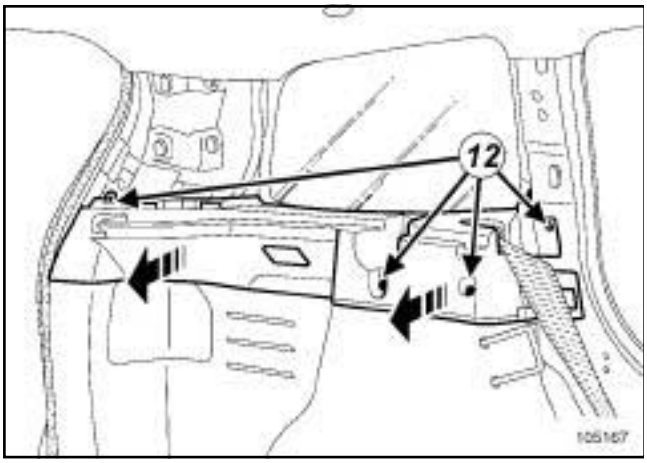

105167

Unclip the luggage compartment light.

Disconnect the luggage compartment lighting connector.

Remove the bolts (**12**) .

Release the rear parcel shelf trim.

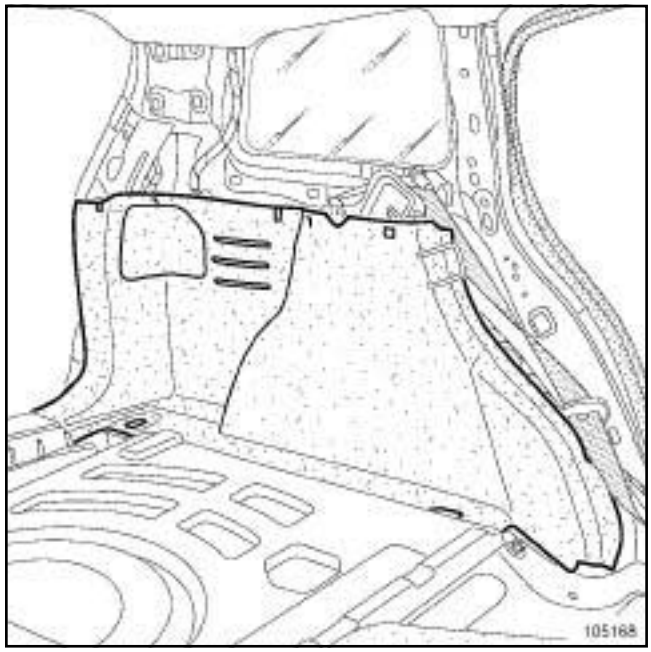

105168

Remove the rear wheel arch trim.

REFITTING

Refit:

- the rear parcel shelf trim,
- the bolts,
- the luggage compartment light connector,
- the luggage compartment light,
- the rear quarter panel trim,
- the luggage compartment seal,
- the C-pillar trim,
- the seat belt guide,
- the seat belt lower mounting.

Torque tighten the **seat belt mounting bolts (21 Nm)** .

Refit:

- the rear door sill upper trim,
- the rear door sill trim,
- the rear bench seat base,
- the B-pillar lower trim.

Connect the battery, starting with the positive terminal (see **80A, Battery: Removal - Refitting**).

Unlock the airbag computer using the **diagnostic tool** (see **88C, Airbags and pretensioners, Airbag computer locking procedure**).

Equipment required
diagnostic tool

Tightening torques ▽	
seat belt mounting bolts	**21 Nm**

REMOVAL

IMPORTANT
Before carrying out any work on or near a safety system component, it is essential to lock the airbag computer using the **diagnostic tool** . When this function is activated, all the trigger lines are disabled and the airbag instrument panel warning light is lit when the ignition is switched on.

Lock the airbag computer using the **diagnostic tool** (see **88C, Airbags and pretensioners, Airbag computer locking procedure**).

Disconnect the battery starting with the positive terminal (see **80A, Battery: Removal - Refitting**).

Move the front seat as far forward as possible.

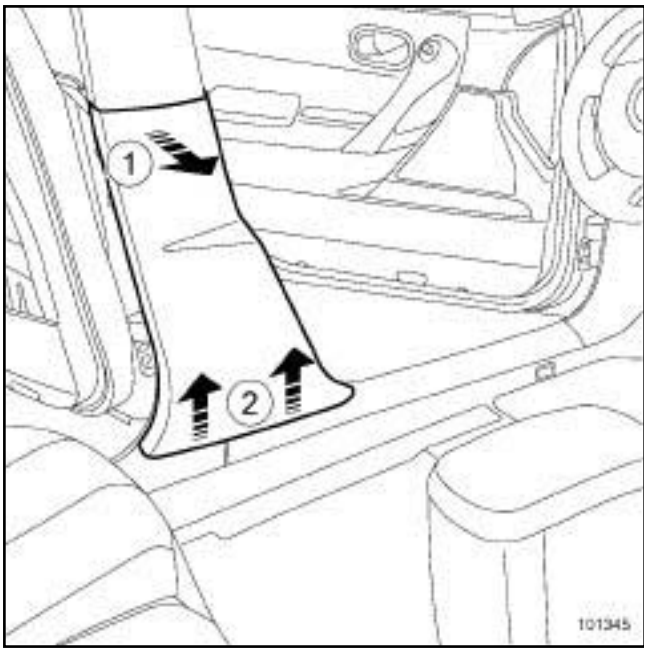

101345

Unclip the upper section of the trim (**1**) .

Remove the trim (**2**) .

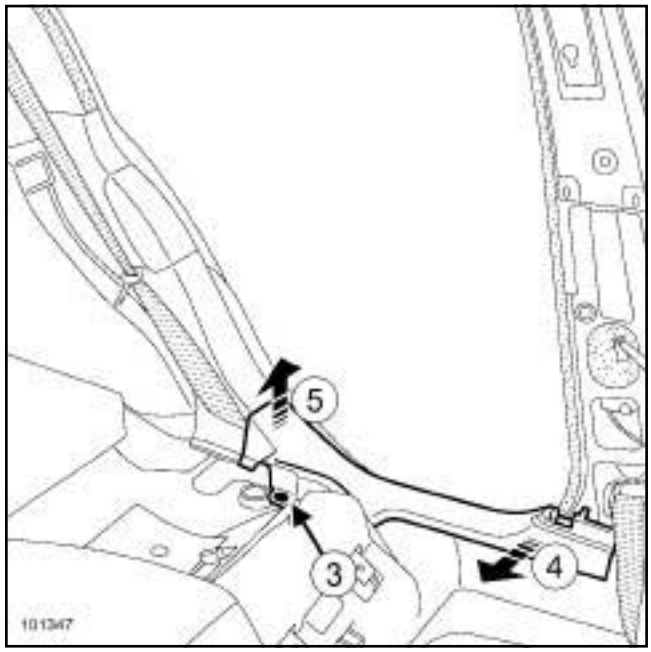

101347

Remove the bench seat base.

Unclip:

- the clip (**3**) using an unclipping tool,

- the trim at (**4**) and (**5**) .

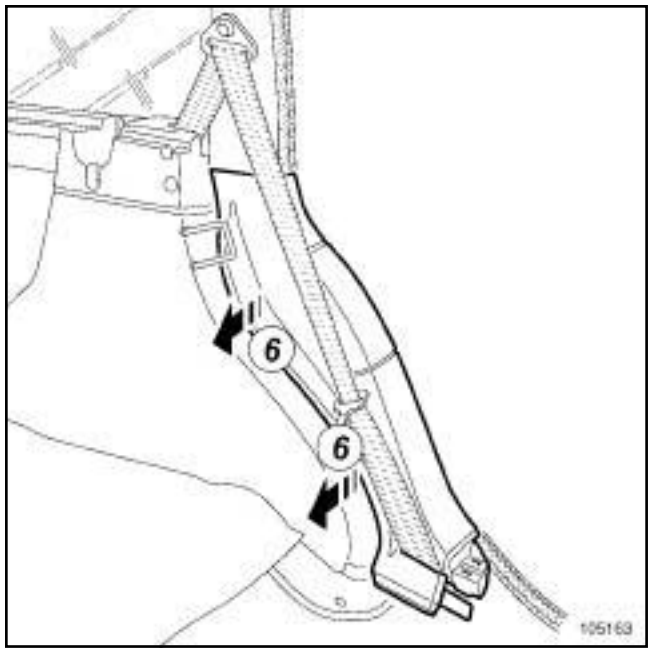

105163

Unclip the trim at (**6**) .

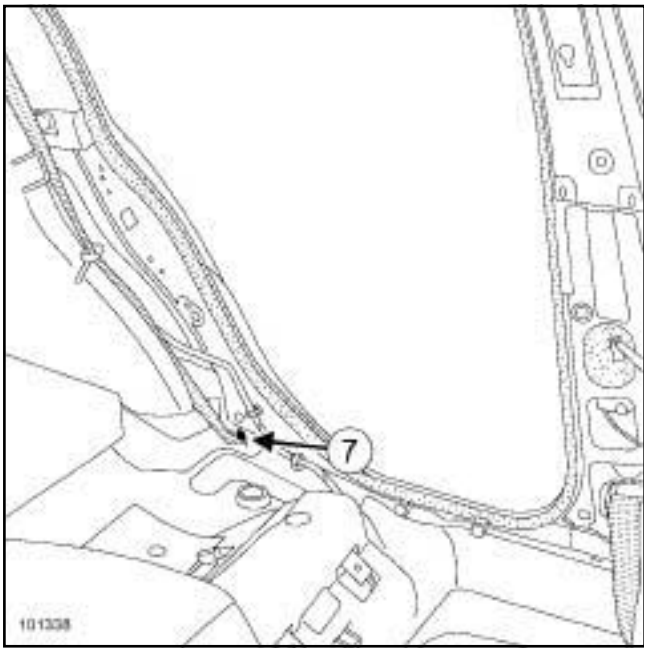

101338

Remove the seat belt lower mounting bolt (**7**) .

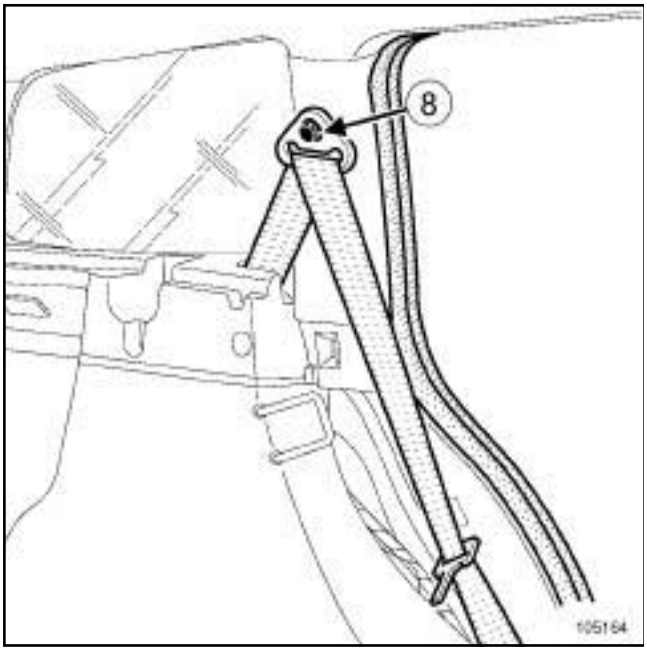

105164

Remove:

- the bolt (**8**) ,
- the seat belt guide.

Partially remove the door seal.

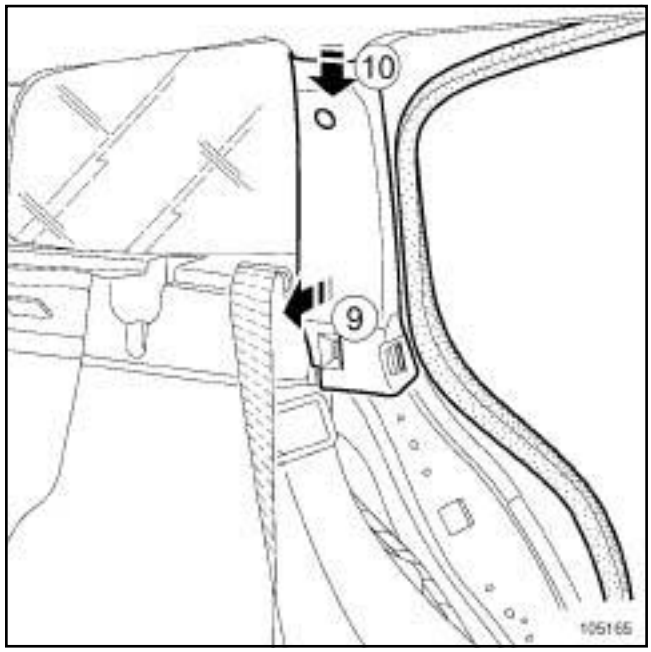

105165

Unclip the C-pillar trim (**9**) and (**10**) .

REFITTING

Refit:

- the C-pillar trim,
- the seat belt guide,
- the seat belt lower mounting.

Torque tighten the **seat belt mounting bolts (21 Nm)** .

Refit:

- the rear door sill upper trim,
- the rear door sill trim,
- the rear bench seat base,
- the B-pillar lower trim.

Connect the battery, starting with the positive terminal (see **80A, Battery: Removal - Refitting**).

Unlock the airbag computer using the **diagnostic tool** (see **88C, Airbags and pretensioners, Airbag computer locking procedure**).

REMOVAL

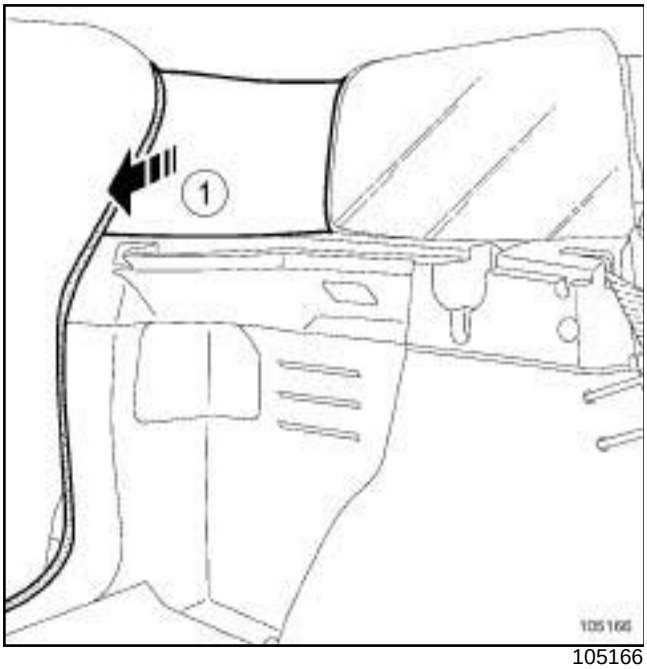

105166

Partially remove the luggage compartment seal.

Unclip the rear quarter panel trim (**1**) .

REFITTING

Clip the rear quarter panel trim.

Refit the luggage compartment seal.

REMOVAL

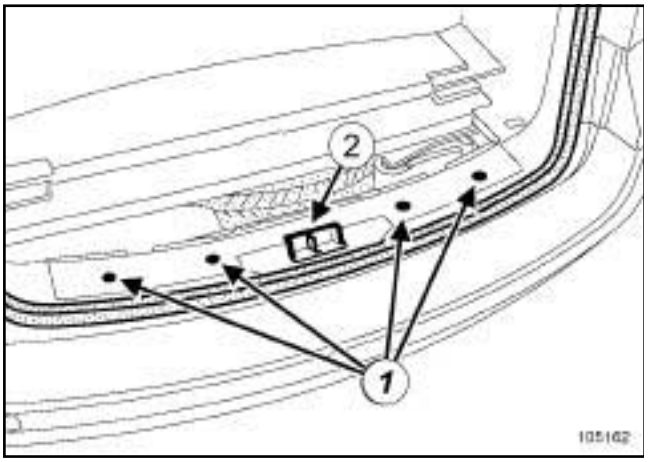

105162

Remove:

- The blanking covers (**1**) ,
- the bolts,
- the striker panel trim piece (**2**) ,
- the luggage compartment seal partially.

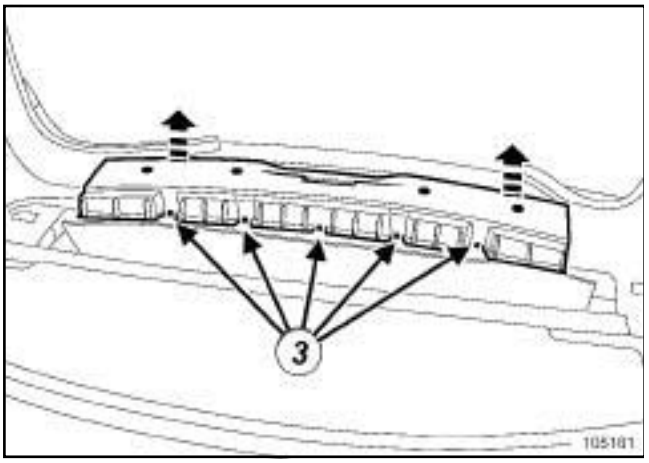

105161

Unclip the rear end panel trim by pressing the clips (**3**) .

REFITTING

Reattach the trim.

Refit:

- the bolts,
- the blanking covers,
- the luggage compartment seal.

REMOVAL

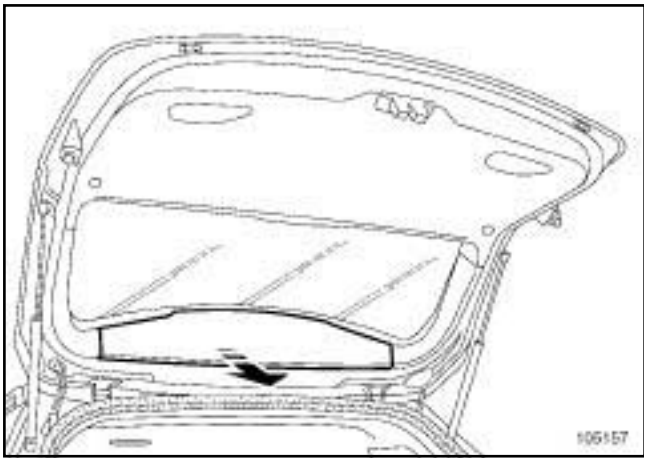

105157

Release the central trim.

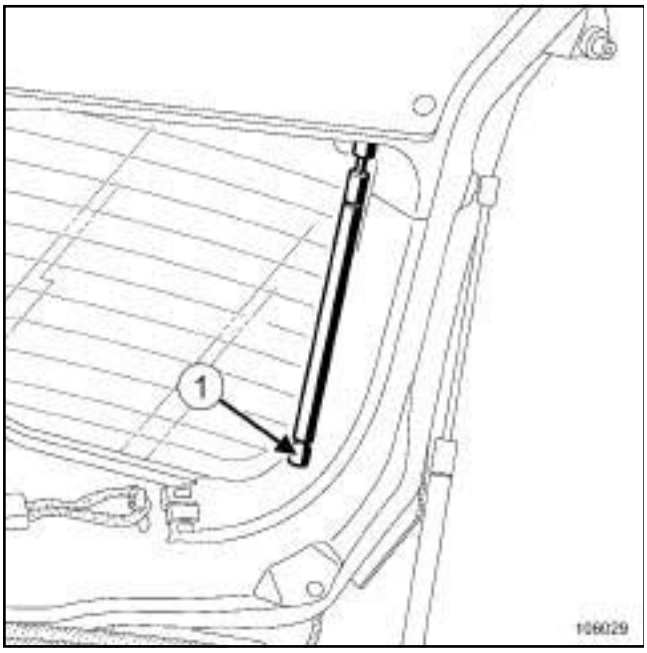

106029

Note the struts' direction of fitting.

Remove the struts (depending on the equipment level), starting at (**1**) .

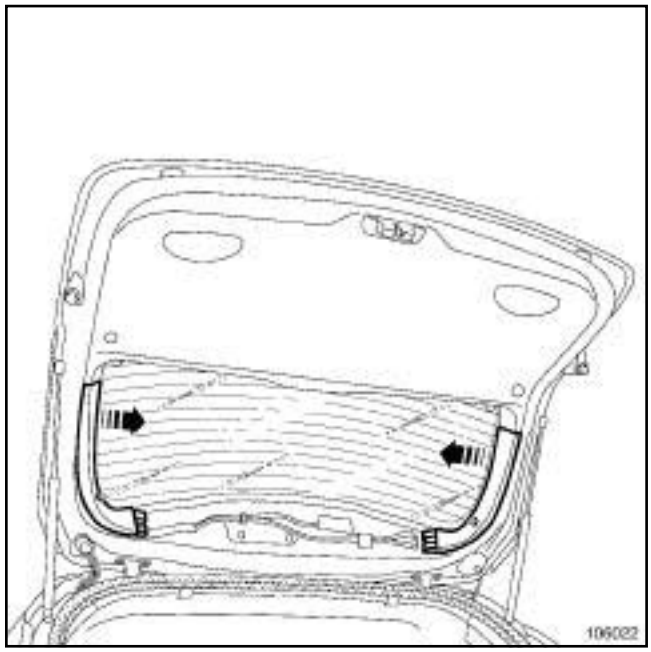

106022

Unclip the side trim panels.

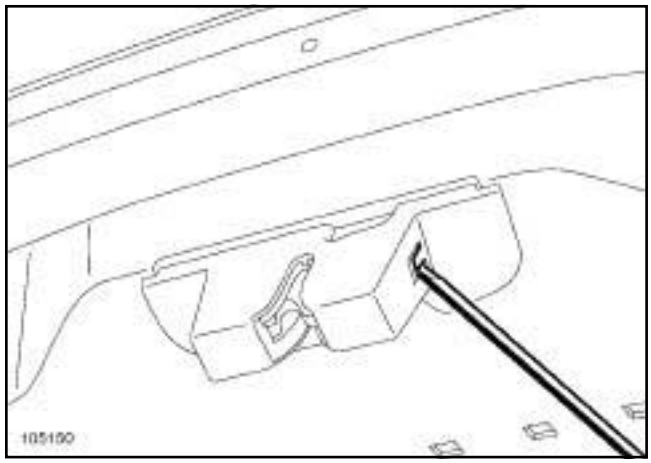

105150

Unclip the lock trim piece.

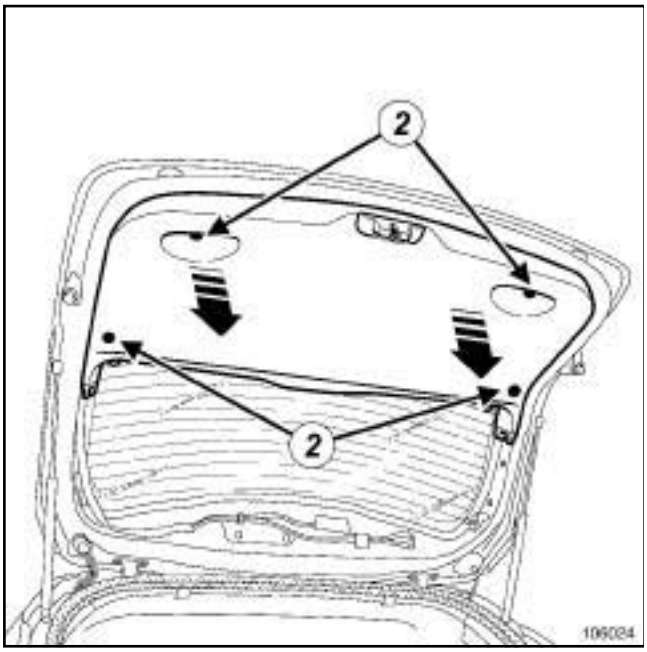

106024

Remove the trim mounting bolts (**2**) .

Remove the tailgate trim.

REFITTING

Refit:

- the tailgate trim,
- the trim bolts,
- the lock trim piece,
- the side trim panels,
- the struts (depending on the equipment level),
- the centre trim.

Mégane II

Type	S/Section
SM0 X	71A

71A CONVERSION OF UTILITY VEHICLES TO PASSENGER VEHICLES

- Engine: **XXX**
- Gearbox: **XXX**

Basic manual:
Workshop Repair Manual: **365**

This technical note deals with special features of the Mégane II Société.

You will find in the following document the information necessary to convert utility vehicles to passenger vehicles.

"The repair methods given by the manufacturer in this document are based on the technical specifications current when it was prepared.

The methods may be modified as a result of changes introduced by the manufacturer in the production of the various component units and accessories from which his vehicles are constructed.

All copyrights reserved by RENAULT.

Copying or translating, in part or in full, of this document or use of the service part reference numbering system is forbidden without the prior written authority of RENAULT.

© RENAULT 2002

Note:
A conversion kit is available from the Parts Department. Linings, wheel arch trims and boot carpets can be ordered separately using the vehicle identification plate.

REMOVING THE LUGGAGE COVER

Remove the centre parcel shelf.

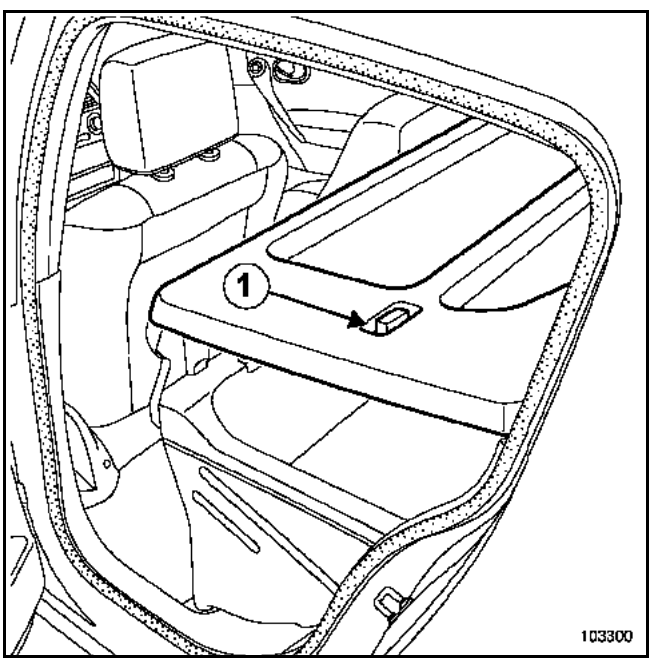

Unlock the two catches (**1**).

Remove the centre parcel shelf.

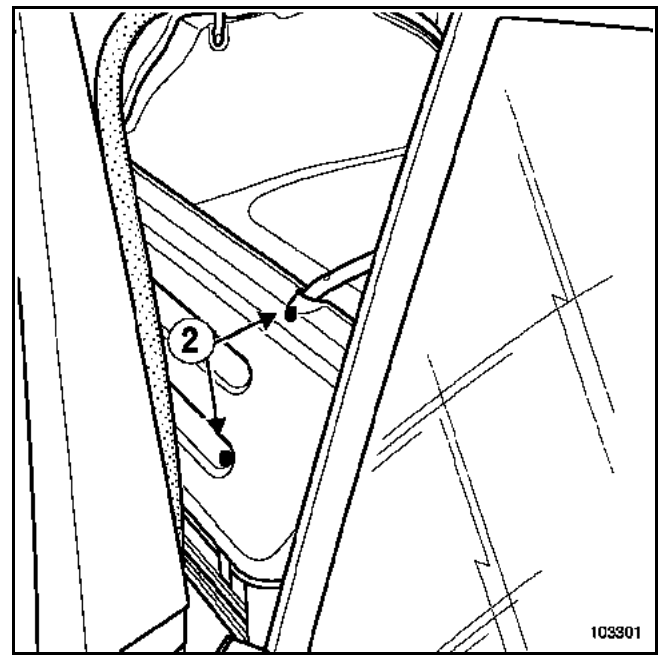

Remove:
– the clips (**2**), using the unclipping tool,
– the partition panel.

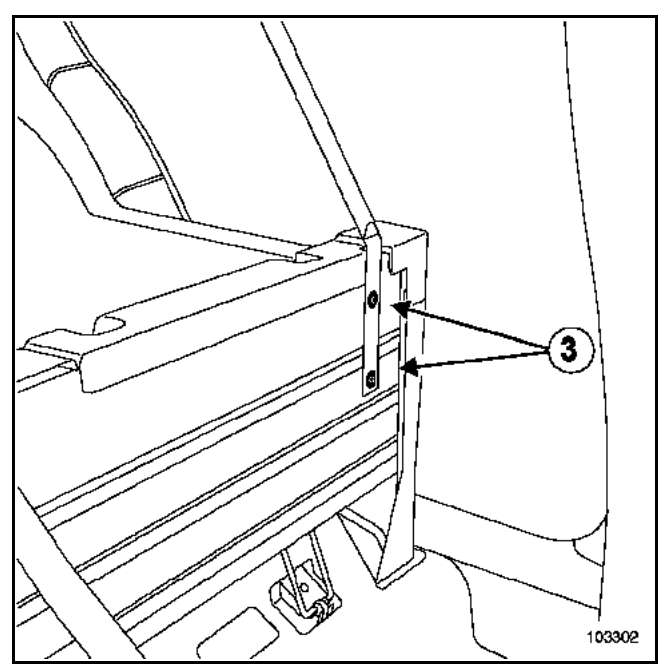

Remove bolts (**3**).

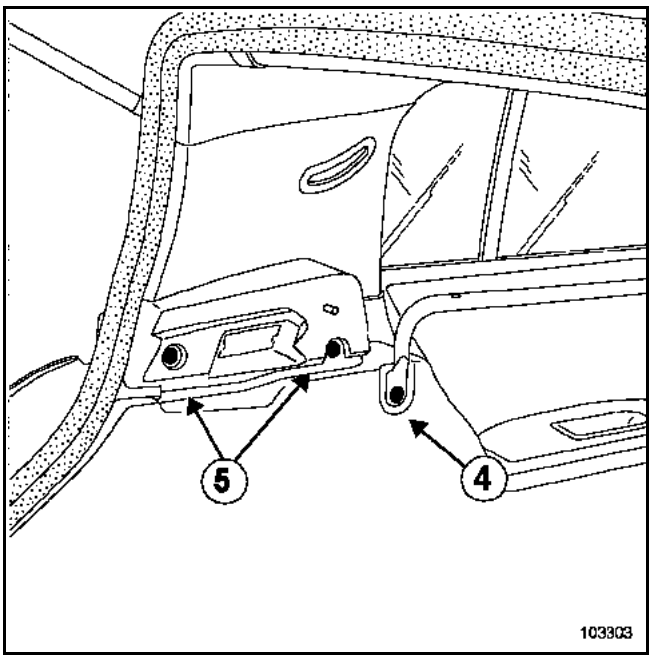

Loosen bolt (**4**) without removing it.

Release the side roof bars.

Remove screws (**5**).

Partially release the parcel shelf.

Disconnect the luggage compartment light.

Remove the tray.

Unclip the rear quarter panel trim.

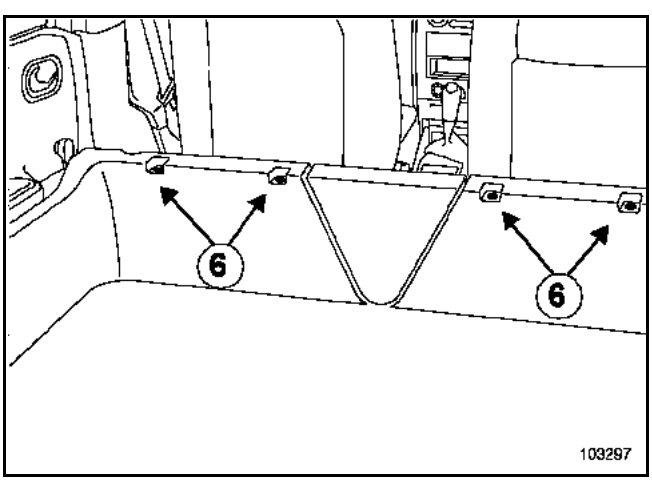

Remove screws (**6**).

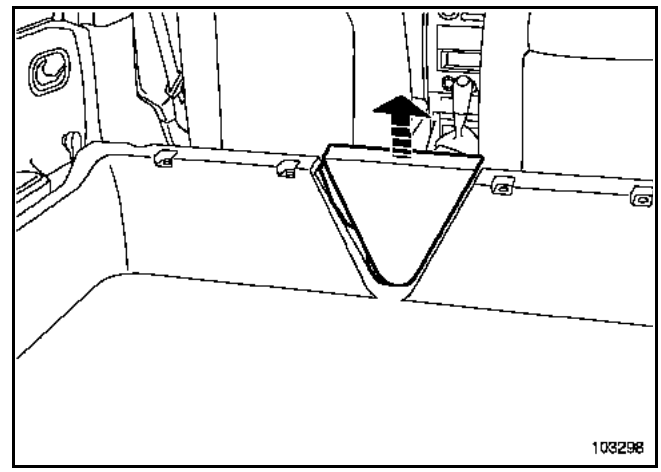

Carefully lift the container.

Release the triangular section.

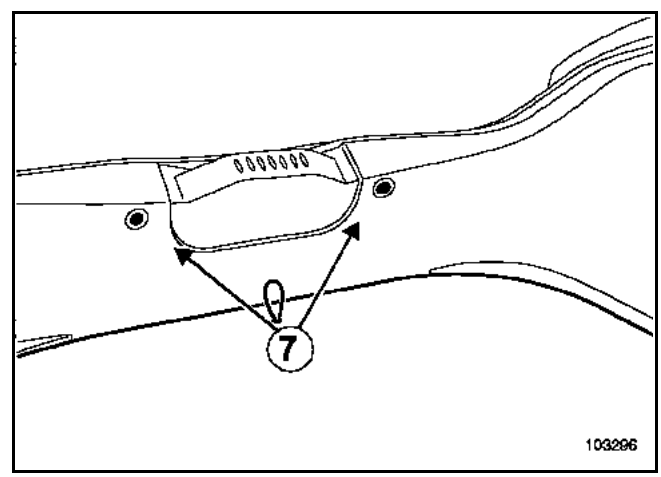

Remove:
– the bolts (**7**),
– the emergency spare wheel flap.

Release the container through the boot lid by bending it slightly.

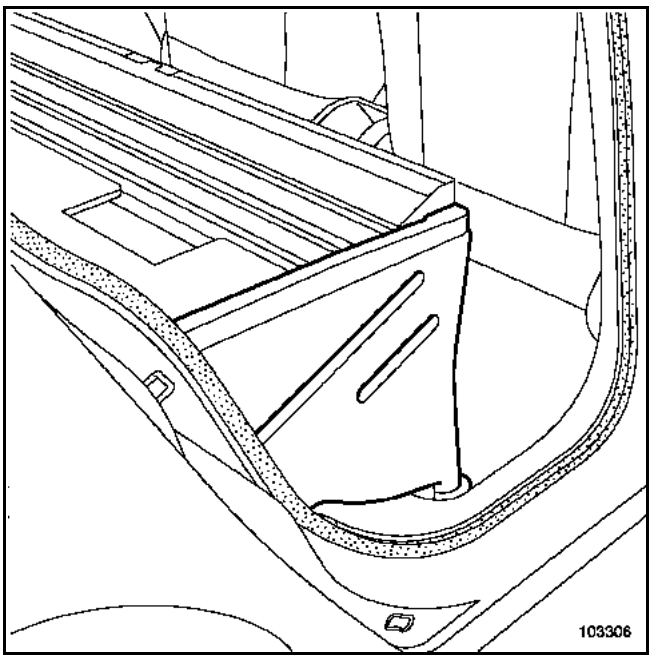

Release the two side trims.

Remove the soundproofing material.

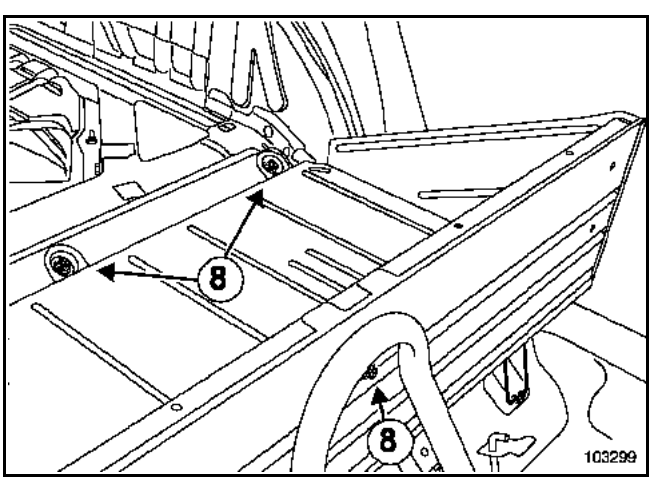

Remove screws (**8**).

Unclip the bench mounting clips from the vehicle floor.

Remove the floor panel.

This operation requires two people.

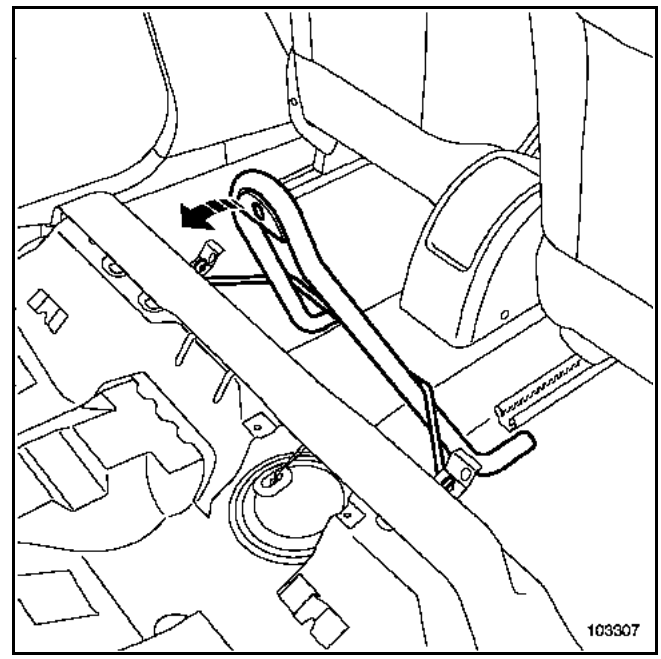

Release the load stop bracket.

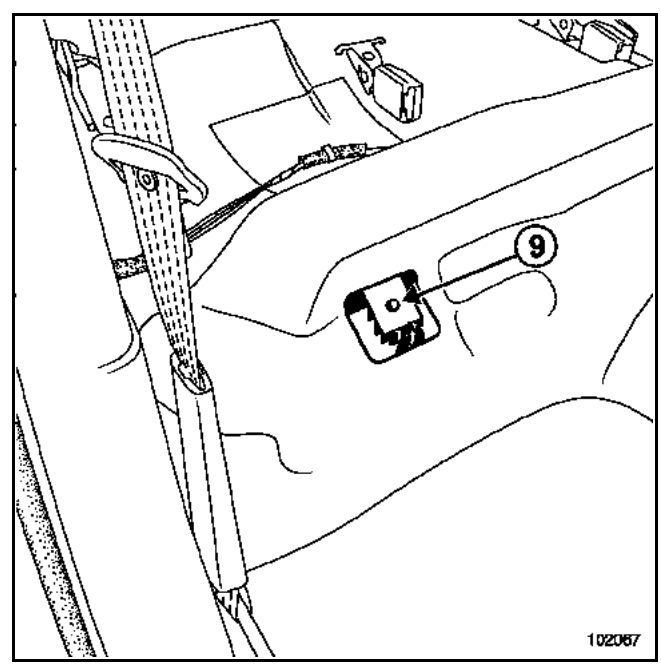

Insert a flat-head screwdriver into opening (**9**).

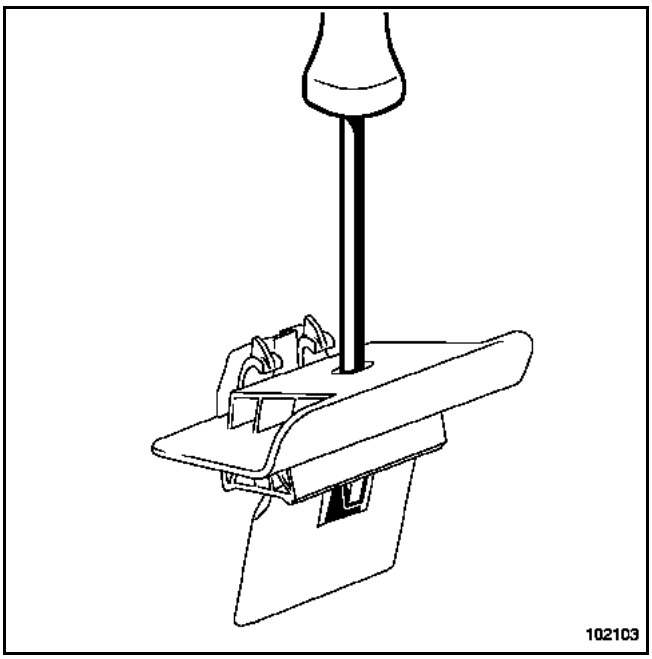

Release the clip by pressing down on the screwdriver.

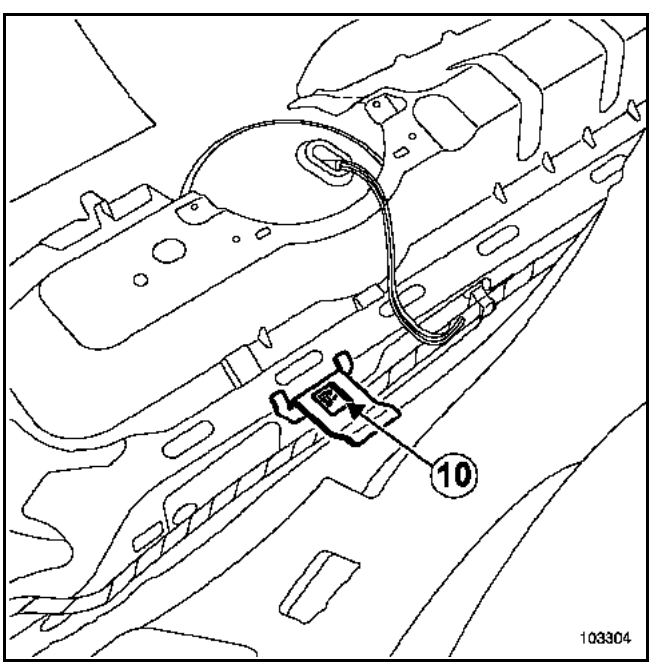

Gently pull away the carpet.

Remove load stop brackets (**10**).

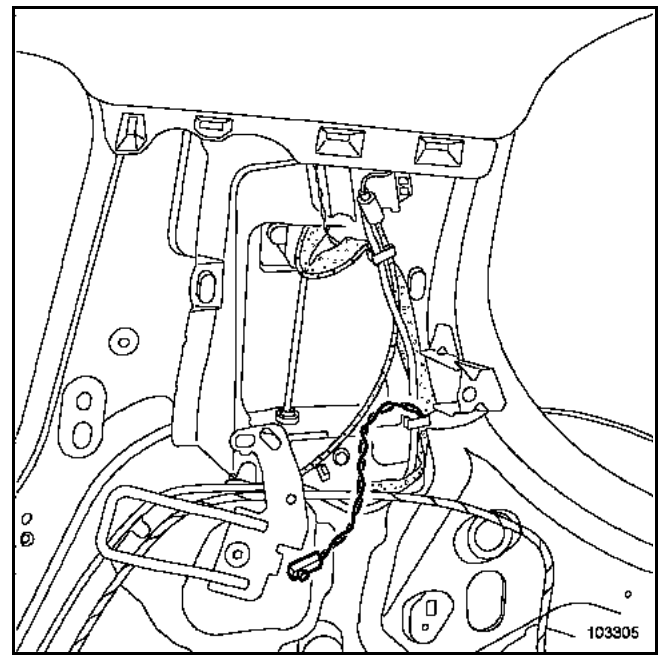

Retrieve the seat belt inertia reel from the rear wing opening.

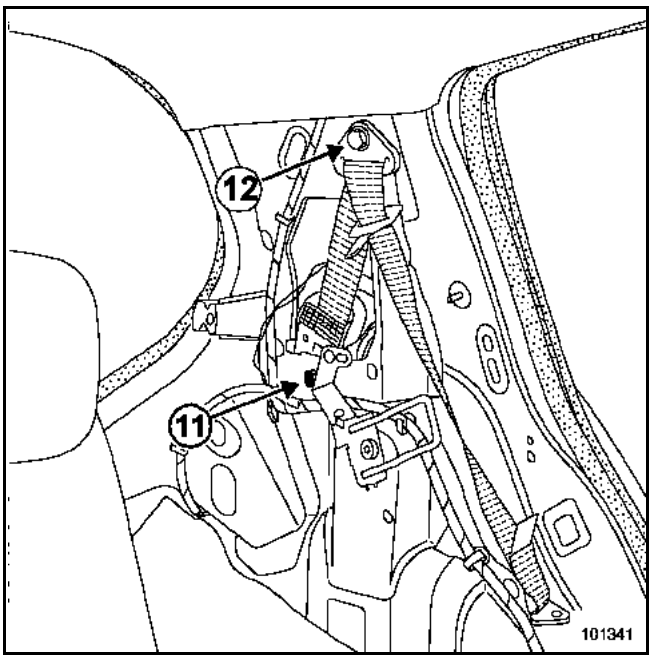

Connect the inertia reel connector.

Fit:
– the inertia reel in position,
– the upper seat belt mechanism.

Tighten **bolt** (**11**) to a torque of (**12**) and (**21 Nm**).

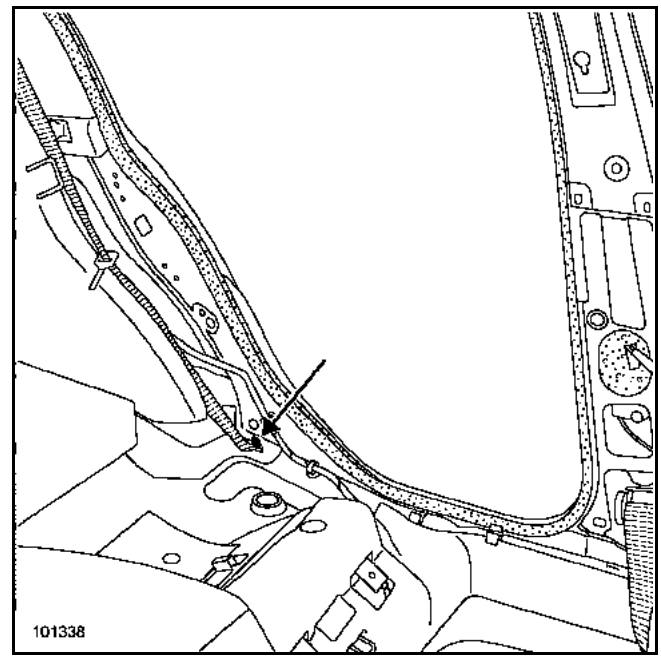

Refit the quarter panel lining taking care to insert the seat belt buckle.

Position the lower seat belt mechanism.

Tighten the **bolt** to a torque of (**21 Nm**).

Note:
For the cross-references to different sections, see **Workshop Repair Manual 365**.
Observe the tightening torques for the different components.

Refit:
– the wheel arch liners (see Section **71A-K**),
– the rear end panel lining,
– the rear sill panel upper and lower linings (see Section **71A-F**),
– the rear parcel shelves.

For the seatback trim , refer to Section **78A-A**.

For the seat squab trim, see Section **78A-B**.

Refit:
– the seatback (see Section **76A-A**),
– the seat belt flexible stalks,
– the seat squab retaining clips,
– the seat squab,
– the rear parcel shelf.

RENAULT

Technical Note 625A

TTY

Finishing product for use after work carried out on panelwork

All types

Sub-section concerned: 40A

European Directive prohibiting the use of heavy metals in vehicle repair work.

77 11 332 382 **JULY 2004** **Edition Anglaise**

"The repair methods given by the manufacturer in this document are based on the technical specifications current when it was prepared.

The methods may be modified as a result of changes introduced by the manufacturer in the production of the various component units and accessories from which his vehicles are constructed."

All copyrights reserved by Renault.

The reproduction or translation in part of whole of the present document, as well as the use of the spare parts reference numbering system, are prohibited without the prior written consent of Renault.

© Renault s.a.s. 2004

Finishing product for use after work carried out on panelwork

Contents

40A GENERAL INFORMATION

Panelwork finishing products:
Use 40A-1

Complying with the new European directive on recycling automobiles, vehicles manufactured after 1st July 2003 must no longer contain lead-based products.

Precisely, for bodywork repairs, these vehicles must no longer be repaired with tin solder, which contains a major proportion of lead.

The replacement solution for this type of operation is the use of aluminium loaded polyester mastic.

The fundamental principle for applying this product is that its thickness does not exceed **1 mm**. This product is used only for surface finishing, and can never be used to remedy a lack of sheet thickness or be used as reinforcement to fill in a fold on a structure component.

Reminder of the types of repair concerned by the use of surfacing mastic:

- finishing after filing down chain bead welds,
- finishing the curve of a straightening job by « pull nail » type inertia,
- surface finishing of straightened, disk ground or sanded areas with **P80**.

POLYESTER MASTIC

Use of bi-component polyester mastic polyester for curves. In standard use, it is applied with a knife and shaped with at least **80** grade sandpaper.

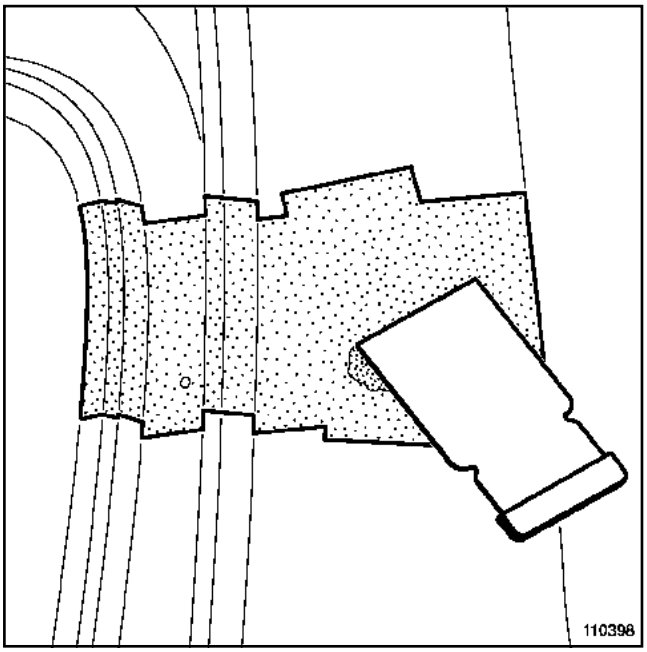

110398

Advantage:

- Excellent adhesion on sanded steel and aluminium sheets.
- Rapid drying.
- Easy to sand.

Disadvantage:

- Application and adhesion are impossible on acid-marked or non-sanded surfaces.

Operator protection:

-

RENAULT

Technical Note 701A

XXXX

Sub-section concerned: 56A

Registration plate mounting rivets

Registration plate mounting rivets fitting recommendations according to each fitting scenario.

77 11 329 422 **OCTOBER 2004** **EDITION ANGLAISE**

"The repair procedures given by the Manufacturer in this document are based on the technical specifications current when it was prepared.

The procedures may be modified as a result of changes introduced by the manufacturer in the production of the various component units and accessories from which their vehicles are constructed."

All copyrights reserved by RENAULT.

Copying or translating, in part or in full, of this document or use of the service part reference numbering system is prohibited without the prior written authority of RENAULT.

© RENAULT 2004

DESCRIPTION OF THE VARIOUS TYPE OF RIVETS

1- Sealed rivet

Note:
Use this type of rivet to secure a registration plate to a metal panel.

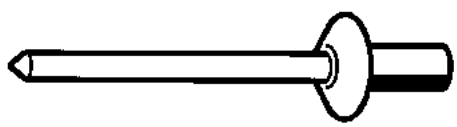

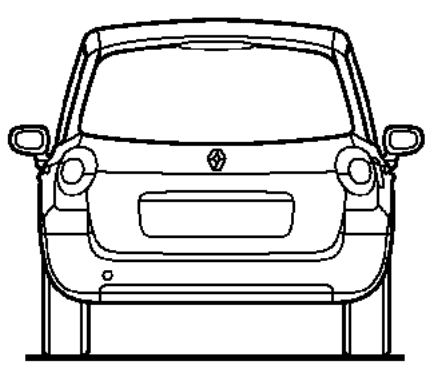

Example: Modus tailgate (version without boot chute).

Description	Part No.
Black sealed rivets	**77 11 170 358**
Yellow sealed rivets	**77 11 170 357**
Black caps	**77 11 171 489**
Yellow caps	**77 11 171 487**

IMPORTANT
When removing-refitting the rear registration plate, it is essential to retain the bodies of the rivets the fall into the tailgate box section to prevent any risk of noise being created or the lock becoming jammed.

2- Aluminium drive rivet

Note:
Use this type of rivet to secure a registration plate on a plastic strip fitted onto the vehicle tailgate or on a tailgate made from composite materials.
This type of rivet must be fitted with a cap the same colour as the registration plate.

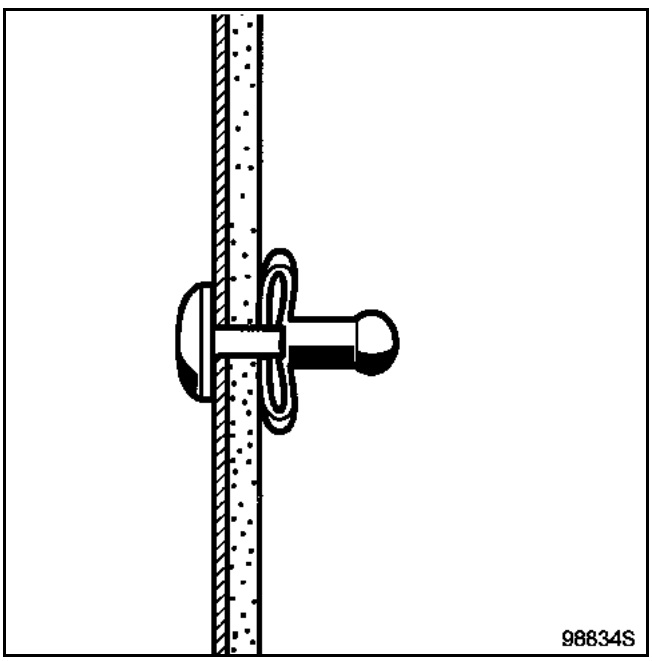

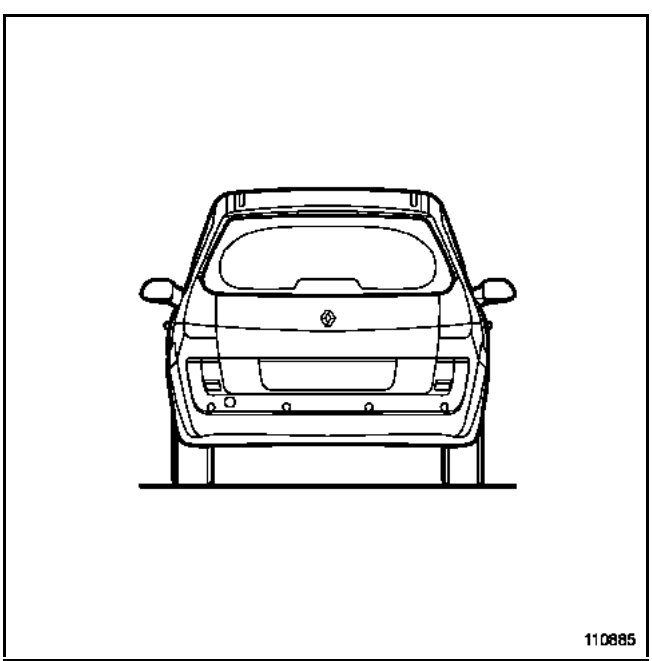

Example: Scénic II rear moulding.

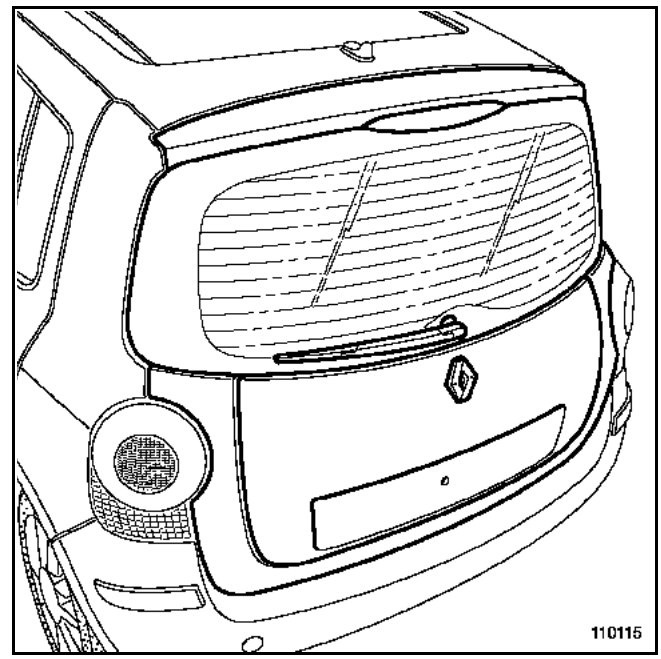

Example: Modus tailgate boot chute.

Description	Part No.
Yellow aluminium drive rivets	**77 11 170 035**
Yellow caps	**77 11 171 487**
Black caps	**77 11 171 489**

IMPORTANT
When removing-refitting the rear registration plate, it is essential to retain the bodies of the rivets the fall into the tailgate box section to prevent any risk of noise being created or the lock becoming jammed.

3- Open rivet

Note:
Use this type of rivet to secure the registration plate onto the front and rear bumper.

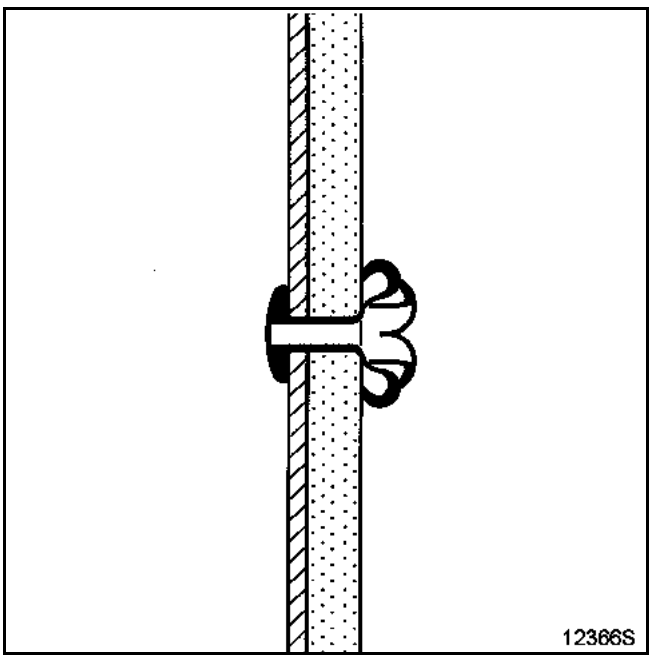

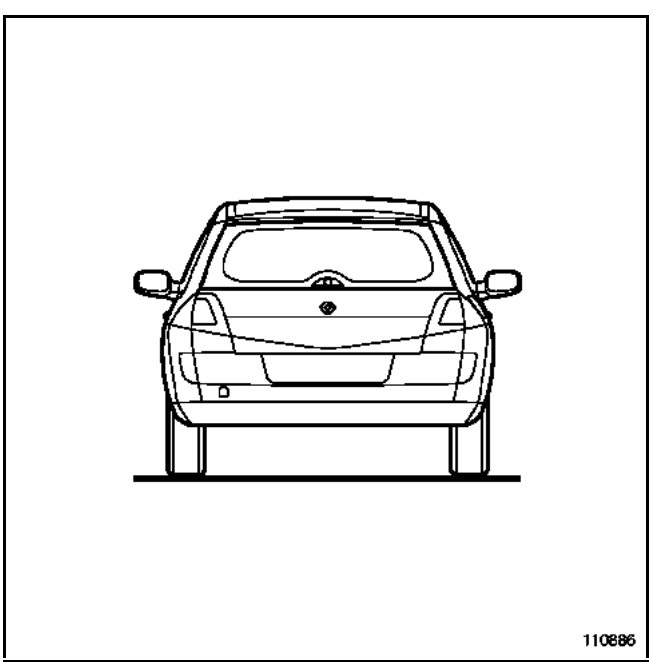

Example: Mégane II front and rear bumper.

Description	Part No.
Black open rivets	**77 11 170 348**
Yellow open rivets	**77 11 170 356**
White open rivets	**77 11 170 355**
Black caps	**77 11 171 489**
Yellow caps	**77 11 171 487**
White caps	**77 11 171 488**

GREEN TECHNICAL NOTE
EDITION ANGLAISE

OCTOBER 2003
77 11 324 542

0826A
Service 00429

MEGANE II

Type	Fabrication cut-offs
BMX X	Until 30 June 2003
CMX X	Until 30 June 2003

44A CREAKING NOISE FROM THE REAR RIGHT OR LEFT-HAND SIDE

Other sub-section concerned: 09A 51A

- Engine: **XXX**
- Gearbox: **XXX**

Basic manual:
Workshop Repair Manual: **364, 365**

All operations on the airbag and pretensioner systems must be carried out by qualified personnel who have received the proper training.

"The repair methods given by the manufacturer in this document are based on the technical specifications current when it was prepared.

The methods may be modified as a result of changes introduced by the manufacturer in the production of the various component units and accessories from which his vehicles are constructed."

All copyrights reserved by RENAULT.

Copying or translating, in part or in full, of this document or use of the service part reference numbering system is forbidden without the prior written authority of RENAULT.

© RENAULT 2003

Customer complaint
– Creaking noise from the rear left or right-hand side when the vehicle is driven on an uneven road surface.
Note: this noise may sound like the creaking of the rear door locks.

Possible cause
– Contact between the quarter panel upper reinforcement and the quarter panel lining.

Fault finding
– Lubricate the rear door and tailgate striker plates.
– Confirm the customer complaint.
– If the noise is still present: apply the Technical Note.

Operation to be carried out
– Stressing the quarter panel upper reinforcement.

Description of the operation

IMPORTANT: it is essential to lock the airbag computer using the diagnostic tool before starting any work. Once it has been locked, all lines are inhibited and the airbag warning light comes on.

REMOVAL
– Remove the quarter panel linings according to the Workshop Repair Manual.

STRESSING THE QUARTER PANEL UPPER REINFORCEMENT

Operation to carry out on the rear right-hand side
– Insert a rod (A) in opening (B).
– Tap rod (A) firmly.

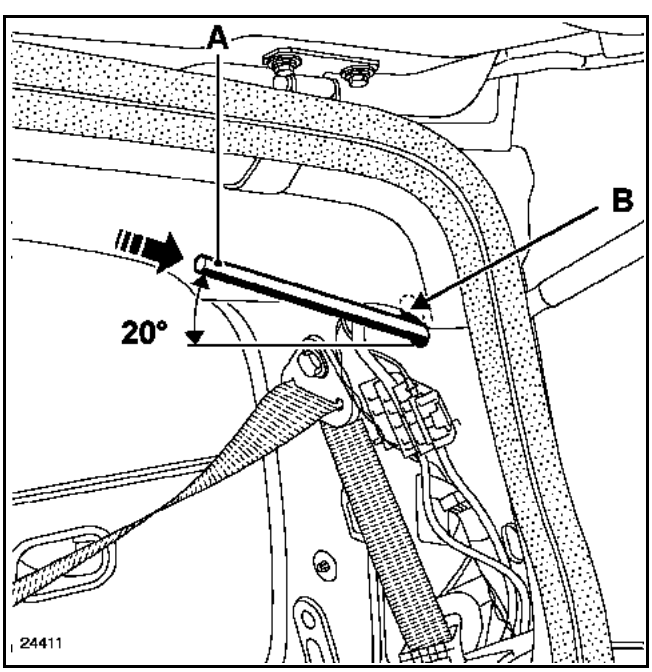

A – 10 mm rod 200 mm in length

Operation to carry out on the rear left-hand side
– Insert a rod (A) in opening (C).
– Tap rod (A) firmly.

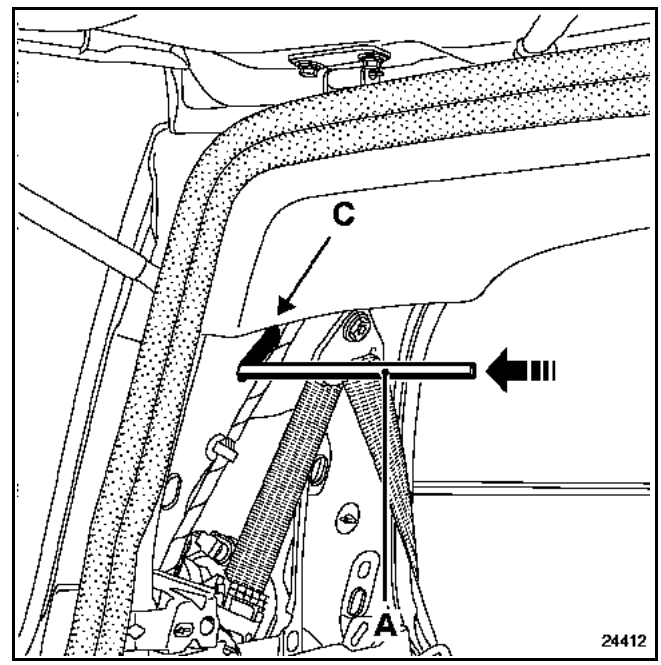

A – 10 mm rod 200 mm in length

REFITTING
– Refit the removed components in the reverse order to removal.

IMPORTANT: unlock the airbag computer using the diagnostic tool (see the **Electrical components** section).

– Carry out a road test.

CLAIM COMPLETION AND CODING

When to take action
– Upon receipt of a customer complaint.

Time required

Code	Description	Time
0325	Check airbags and pretensioners	0.3
7058	Replacement of left-hand quarter panel lining, 3-door	0.5
7059	Replacement of left-hand quarter panel lining, 5-door	0.4
7058	Replacement of right-hand quarter panel lining, 3-door	0.5
7059	Replacement of right-hand quarter panel lining, 5-door	0.4
7575	Stressing panel	0.2
0129	Basic road test	0.5
	TOTAL **3-door** **5-door**	 **2.0** **1.8**

Codification procedures

- **With PG&CS**
– Catalogue function:

Description	Code
Body shell	**001**

– Cause opecode: **7575**

- **Without PG&CS**
– NITG code: **C232**

- **With or without PG&CS**
– Supplier code: **050**
– Customer complaint code: **2D**

RENAULT CONFIDENTIAL

MEGANE II

See list on next page

Cancels and replaces Technical Note No. 0850C from JUNE 2005.
Modifications: Extension to vehicle types and fabrication cut-offs.

51A **FRONT ELECTRIC WINDOWS**
OTS: 0AKH MARK.: J1

Other sub-section concerned: **999**

Basic manual:
Workshop Repair Manual: **365**

The vehicle fabrication cut-offs are given as examples only.
IMPORTANT: check before starting any operation that the vehicle is affected by OTS: 0AKH.

- **Countries with PGCS**

Network with ICM:	Refer to the list of OTS operations to be carried out in ICM.
Network without ICM:	Check, on the blue label, box **J1**. • If the box is not marked with a cross Contact your primary network to consult the list of OTS to be carried out in ICM.

- **Countries without PGCS**

All networks:	Check, on the blue label, box **J1**. • If the box is not marked with a cross The vehicle is affected.

"The repair procedures given by the manufacturer in this document are based on the technical specifications current when it was prepared.

The procedures may be modified as a result of changes introduced by the manufacturer in the production of the various component units and accessories from which his vehicles are constructed".

All rights reserved by RENAULT S.A.S.

Copying or translating, in part or in full, of this document or use of the service part reference numbering system is forbidden without the prior written authority of RENAULT S.A.S.

© RENAULT s.a.s. 2005

LIST OF VEHICLES CONCERNED

Vehicle	Type	from	to
MEGANE II	BM0 B	D 000005	D 081074
		E 000021	E 204357
	BM0 C	D 000019	D 081168
		E 000001	E 204415
	BM0 F	D 000018	D 081049
		E 000003	E 204417
	BM0 G	D 000006	D 081173
		E 000015	E 204416
	BM0 H	D 000143	D 081160
		E 000183	E 203511
	BM0 J	D 000253	D 081027
		E 000136	E 204203
	BM0 U	D 000084	D 081172
		E 000050	E 204291
	BM0 0	D 021336	D 031518
		E 056754	E 061438
	BM0 2	D 052972	D 081179
		E 154722	E 204414
	BM0 5	E 071322	E 204390
	BM0 8	D 014249	D 080989
		E 009971	E 202649
	BM1 A	E 068218	E 195370
	BM1 B	E 045565	E 203645
	BM1 G	D 000728	D 080925
		E 000537	E 105270
	BM1 M	E 156422	E 159725
	BM1 N	D 054282	D 081038
		E 159188	E 202991
	CM0 B	E 000008	E 072472
	CM0 C	E 000002	E 072445

Vehicle	Type	from	to
MEGANE II	CM0 F	E 000001	E 072480
	CM0 G	E 000007	E 072481
	CM0 H	E 000336	E 072393
	CM0 J	E 000267	E 072309
	CM0 U	E 000078	E 072483
	CM0 0	E 029477	E 030879
	CM0 2	E 058113	E 072479
	CM0 5	E 052044	E 072376
	CM0 8	E 010249	E 072459
	CM1 B	E 046754	E 072425
	CM1 G	E 001079	E 072421
	CM1 M	E 058744	E 059576
	CM1 N	E 056374	E 072475
	GM0 F	E 000001	E 001228
	GM0 2	E 000948	E 000948
	KM0 B	E 004080	E 023364
	KM0 C	E 000033	E 023363
	KM0 F	E 000003	E 023324
	KM0 G	E 000018	E 023366
	KM0 H	E 000025	E 023361
	KM0 J	E 000105	E 023355
	KM0 U	E 000046	E 023362
	KM0 2	E 019247	E 021334
	KM1 G	E 000121	E 023345
	KM1 N	E 014950	E 015201
	SM0 F	D 000001	D 002352
		E 000001	E 003875
	SM0 2	E 002676	E 003726

TECHNICAL INFORMATION

Preventive operation
– Fixing a sheath stop onto the front window lift mechanism.

Objective
– To prevent the front window lift from not operating correctly.

Description of the operation
– Position a sheath stop on the front right- and left-hand window lift mechanisms.
- 5-door MEGANE II (see page 51A-4).
- 3-door MEGANE II (see page 51A-5).

Marking the vehicle after work has been carried out
– Affix a blue label, **Part No.: 49 39 031 079**, to the driver's side front shock absorber turret.
– Mark a cross in box: **J1** using a marker pen.

CLAIM COMPLETION AND CODING

When to take action
– The first time the vehicle is brought into the workshop.

Parts required

Quantity and description of parts		Part no.
1	Kit Consisting of: – 2 sheath stops – 2 M6 H bolts	**82 00 545 247**

Time required

Code	Description	Time
0096	Application of OTS	0.2
7605	OTS Fit two sheath stops	0.5
	TOTAL	**0.7**

Accounts procedure
– In accordance with warranty directives.

OTS Code: **0AKH** (0 = Zero)
– Closure date: **31/12/2008**

5-door MEGANE II

Operation to be carried out on the right- and left-hand window lift mechanisms.

REMOVAL
– Unclip the frame flap (A) (see **Workshop Repair Manual 365, 72A, Side opening elements trim, Front door flap**).

IMPORTANT
Do not disconnect the electric window plate connectors.

– Pass the electric window plate through its opening.

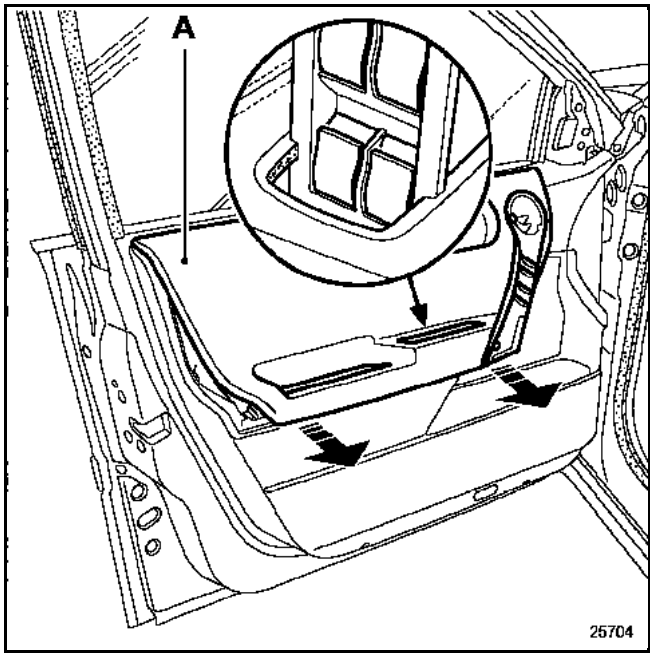

A – Door frame flap

– Open the door frame flap and keep it open (using masking tape).
– Lower the window by **25 mm** to slacken the control cable.

FITTING A SHEATH STOP

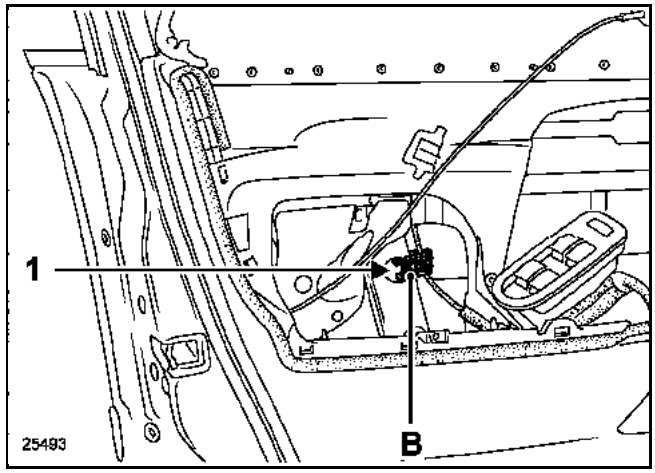

1 – Mounting hole
B – Sheath stop

– Pass the sheath stop behind the control cable and the support rail.
– Position the open sheath stop (B) in the mounting hole (1).
– Close the stop by squeezing the control cable sheath into its housing.
– Tighten the sheath stop mounting bolt manually.

IMPORTANT
Do not allow the window to come into contact with the sheath stop when it is being lowered.

– Gradually lower the window as far as possible in order to slacken the control cable completely.

IMPORTANT
The sheath stop mounting bolt MUST be tightened in the window down position.

– Tighten to torque the sheath stop mounting bolt (**6.5 Nm ± 0.15**).
– Open and close the window to make sure that it is operating correctly.

REFITTING
– Refit the removed components in the reverse order to removal.

3-door MEGANE II

Operation to be carried out on the right- and left-hand window lift mechanisms.

REMOVAL
– Unclip the frame flap (A) (see **MR 365, 72A, Side opening elements trim, Front door flap**).

IMPORTANT
Do not disconnect the electric window plate connectors.

– Pass the electric window plate through its opening.

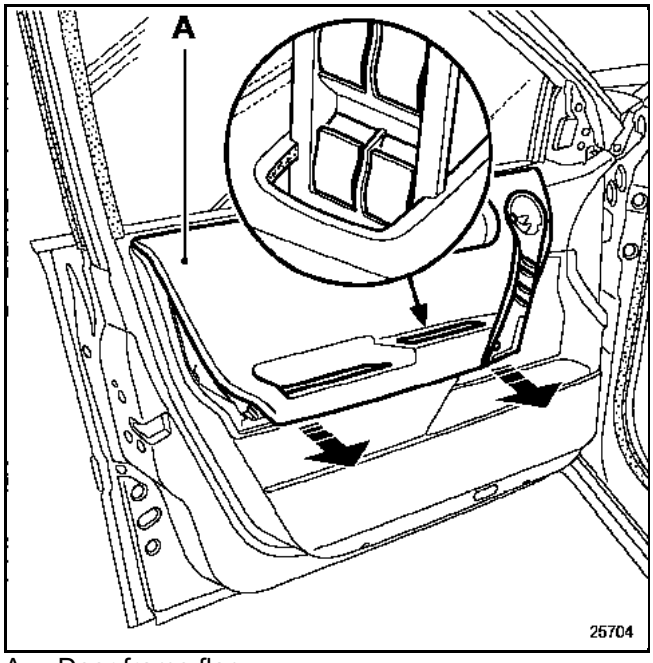

A – Door frame flap

– Open the door frame flap and keep it open (using masking tape).
– Lower the window by **25 mm** to slacken the control cable.

FITTING A SHEATH STOP

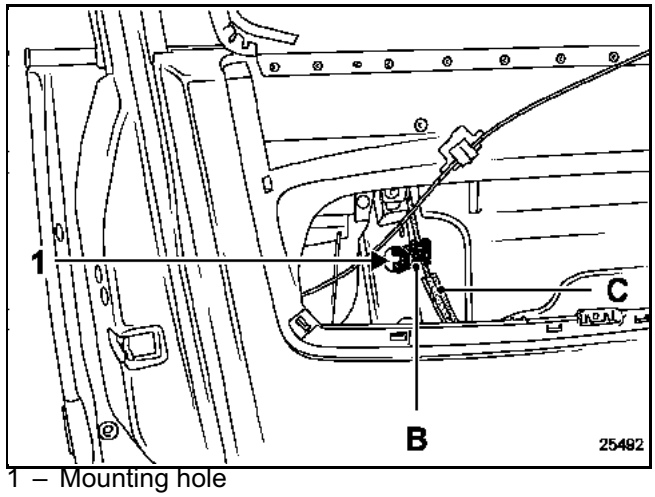

1 – Mounting hole
B – Sheath stop
C – Star section sheathing

IMPORTANT
The sheath stop MUST be fixed onto the control cable sheath.
Cut the sheath for the star section (C) if necessary.

– Pass the sheath stop behind the control cable and the support rail.
– Position the open sheath stop (B) in the mounting hole (1).
– Close the stop by squeezing the control cable sheath into its housing.
– Tighten the sheath stop mounting bolt manually.

IMPORTANT
Do not allow the window to come into contact with the sheath stop when it is being lowered.

– Gradually lower the window as far as possible in order to slacken the control cable completely.

IMPORTANT
The sheath stop mounting bolt MUST be tightened in the window down position.

– Tighten to torque the sheath stop mounting bolt (**6.5 Nm ± 0.15**).
– Open and close the window to make sure that it is operating correctly.

REFITTING
– Refit the removed components in the reverse order to removal.

GREEN TECHNICAL NOTE
EDITION ANGLAISE

SEPTEMBER 2005
77 11 340 722

0851A
Service 00429

MEGANE II

Type

BMX X
CMX X
GMX X
KMX X
LMX X
SMX X

43A FRONT RIGHT-HAND AND/OR LEFT-HAND DOOR DIFFICULT TO OPEN OR CLOSE

Other subsection concerned: **43A** **51A**

Basic manual:

Workshop Repair Manual: **364, 365, 400**
Technical Note: **592A, 8206A, 8229A, 8266A, 8267A**

All operations on airbag and pretensioner systems must be carried out by qualified and trained personnel.

"The repair procedures given by the manufacturer in this document are based on the technical specifications current when it was prepared.

The procedures may be modified as a result of changes introduced by the manufacturer in the production of the various component units and accessories from which his vehicles are constructed".

All rights reserved by RENAULT S.A.S.

Copying or translating, in part or in full, of this document or use of the service part reference numbering system is forbidden without the prior written authority of RENAULT S.A.S.

© RENAULT s.a.s. 2005

TECHNICAL INFORMATION

Customer complaint
- Front right-hand and/or left-hand door difficult to open or close.
- Front right-hand and/or left-hand door dropping.
- Uneven flush fitting between upper part of door and vehicle body.

Possible cause
- Cracks in body side panel and upper hinge mounting reinforcement on A-pillar.

Fault finding
- Confirm the customer complaint.

Body side
- Check (**1**) for a crack in the mastic on the top of the front door upper hinge.

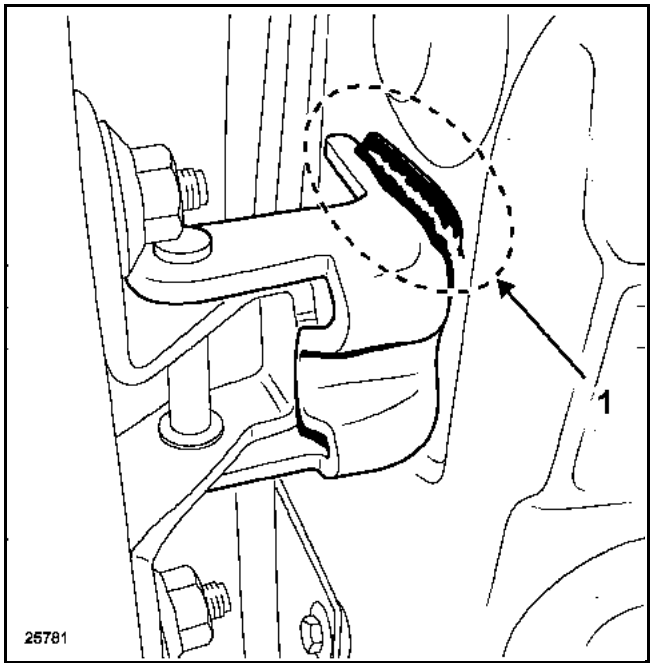

Door side *after removing the front door*
- Check (**2**) the two spot welds of the hinge lower reinforcement on the door box section.
- If one of the two lower mounting spot welds on the door box section is cracked, the front door must be replaced.
  Note: cracks in this area may be adjacent to or near the spot weld.

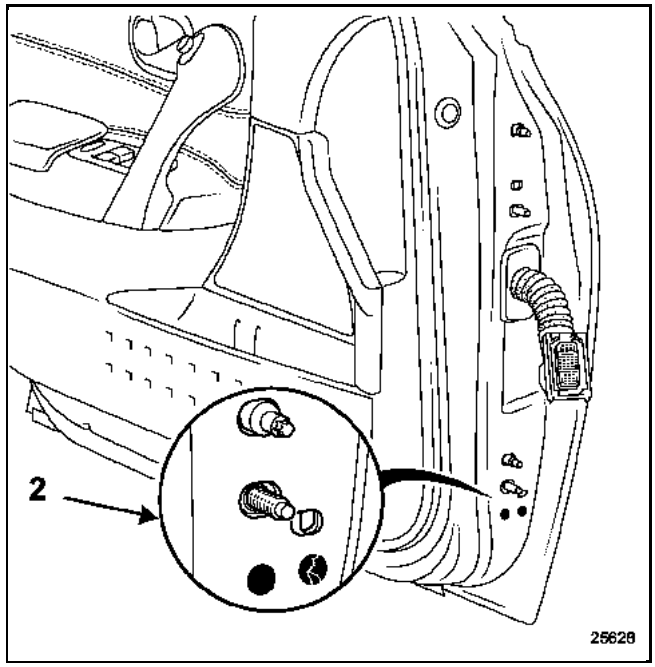

Operation to be carried out
- Replacement of the upper hinge reinforcement on the A-pillar.
- Strengthening of the lower hinge reinforcement on the A-pillar.

- If one of the two lower mounting spot welds on the front door box section is cracked:
  - Replace the front door.

Description of the operation

REMOVAL

> **IMPORTANT**
> Before removing an airbag cushion, lock the computer using the diagnostic tool. When this function is activated all the trigger lines are inhibited and the airbag warning light on the instrument panel lights up when the ignition is switched on.

- Disconnect the battery (see **MR 364, 80A, BATTERY, Battery: Removal - Refitting**).
- Disconnect the UCH connectors.

> **IMPORTANT**
> To avoid damaging the vehicle's electrical and electronic components, the earths of any wiring near the weld zone MUST be disconnected.
> The earth of the welding machine must be placed as close as possible to the welding zone.

- Remove:
  - The front wheel,
  - The front wheel arch liner,
    (see **MR 365, 55A, Exterior protection, Front wheel arch liner**).
  - The front bumper,
    (see **MR 365, 55A, Exterior protection, Front bumper**).
  - The front headlight:
    - Halogen,
      (see **MR 364, 80B, Headlights, Halogen headlight: Removal - Refitting**).
    - Xenon,
      (see **MR 364, 80C, Xenon bulbs, Xenon headlight: Description**).
  - The bonnet,
    (see **MR 365, 48A, Non-side opening elements, Bonnet**).
  - The bonnet hinges,
    (see **MR 364, 48A, Non-side opening elements, Bonnet**).
  - The front wing,
    (see **MR 365, 42A, Upper front structure, Front wing**).
  - The front wing upper mounting bracket
    (see **MR 365, 42A, Upper front structure, Front wing upper mounting bracket**).
  - The front door,
    (see **MR 365, 47A, Side opening elements, Front side door**).
  - The dashboard,
    (see **MR 365, 57A, Interior equipment, Dashboard**).
  - The door sill lining,
    (see **MR 365, 71A, Body internal trim, Front door sill lining**).
  - The engine compartment connection unit,
    (see **MR 364, 87G, Engine compartment connection unit, Protection and Switching Unit**).
  - The A-pillar wiring harness,
    (**Visu SCHEMAS**).

REPLACEMENT OF THE UPPER HINGE REINFORCEMENT ON THE A-PILLAR

> **IMPORTANT**
> Protect the vehicle interior and exterior from possible damage caused by grinding and welding.

- Remove the dashboard cross member mounting bolts.
- Cut (**3**) the mastic bead on the scuttle side panel upper stiffener.
- Unpick the scuttle side panel upper stiffener spot welds.
- Remove the mounting bolt from the front section of the scuttle side panel upper stiffener.
- Remove the scuttle side panel upper stiffener.

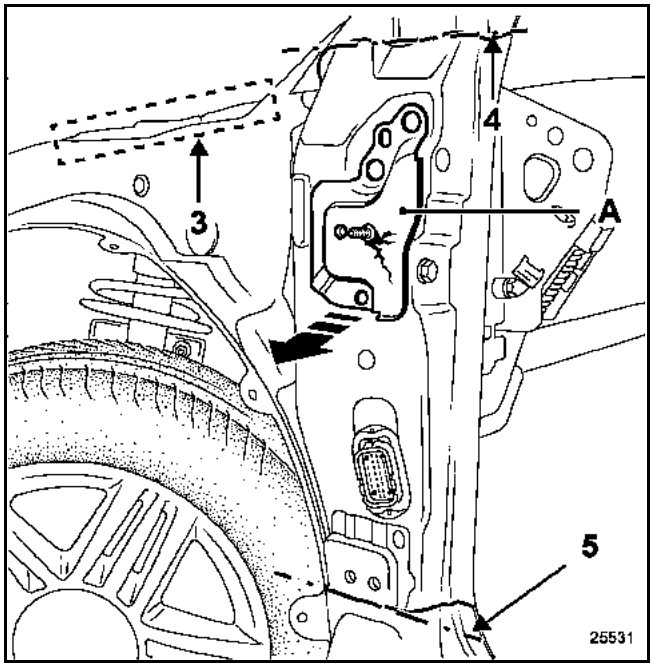

3 – Mastic bead cutting zone
4 and 5 – Partial cuts to the A-pillar, body side
A – Hinge reinforcement

- Mark out axes (**4**) and (**5**) to partially cut the body side on the A-pillar.

> **IMPORTANT**
> Do not cut below the lower hinge reinforcement, as this may damage the expanding insert.

- Carefully cut the body side of the A-pillar, following the markings (**4**) and (**5**)
  (see **MR 400, General information, Resistance spot welded connection with direct access: Description**).
- Unpick the body side spot welds on the A-pillar.
- Remove the cut section.
- Block the bottom of the hollow section to prevent the entry of foreign bodies.
- Deburr the cut.
- Mark the outline of the upper hinge reinforcement.
- Unpick the 6 upper hinge reinforcement points (**A**).
- Remove the upper hinge reinforcement.
- Drill plug weld holes on the new reinforcement.

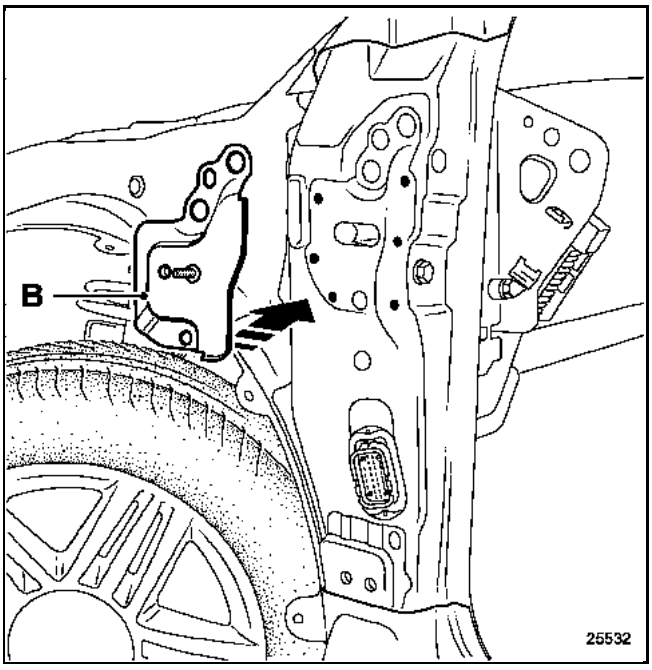

B – New upper hinge reinforcement

- Position the new upper hinge reinforcement (**B**) on the reinforcement ring, according to the marking.
- Secure the hinge reinforcement with an instrument panel cross member bolt to weld the upper hinge reinforcement onto the reinforcement ring using plug welds.
- Apply the protection procedure to the hollow sections between the upper hinge reinforcement and the reinforcement ring via the beam mounting holes.
- Protect the hollow sections
  (See **Technical Note 592A, 94B, Protection product application procedure, Protecting hollow sections**).

STRENGTHENING OF THE A-PILLAR LOWER HINGE REINFORCEMENT

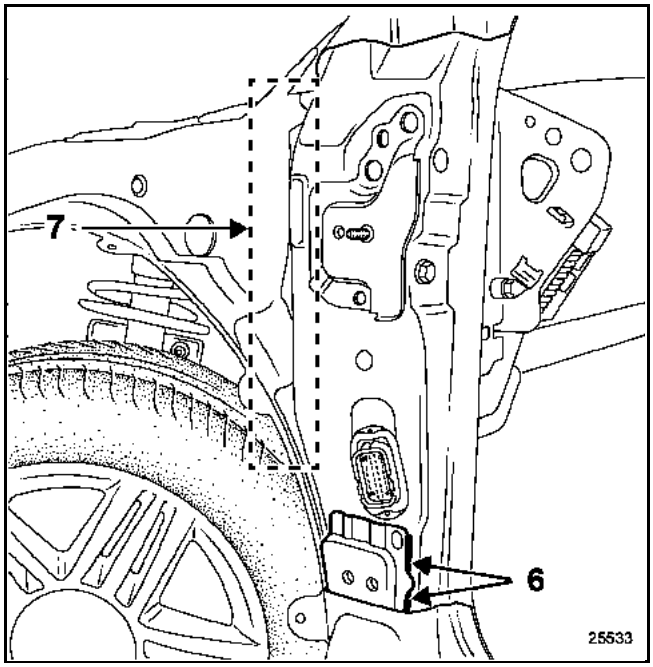

6 – Weld bead
7 – Mastic zone

- Use (**6**) two 15 mm long anchoring weld beads on the lower hinge of the A-pillar.
- Apply the protection procedure to the hollow sections between the lower hinge reinforcement and the reinforcement ring via the hinge mounting hole.
- Apply mastic to the two weld beads.
- Apply mastic to the area (**7**) to ensure that the passenger compartment is watertight.
- From the body side (**Part No. 77 51 473 717** and/or **77 51 473 721**), cut the section required for the repair.
- Position the cut section on the A-pillar with vice-grip pliers.
- Position, weld and level the panels edge to edge (see **MR 400, 40A, General information, Resistance spot welded connection in three thicknesses: description**).
- Plug weld at the unpicked points.
- Apply the protection procedure to the hollow sections between the body side and reinforcement ring.
- Apply mastic to the upper and lower weld beads and plug welds on the body side.
- Replace and reweld the scuttle side panel upper stiffener.
- Apply mastic to the area (**8**).

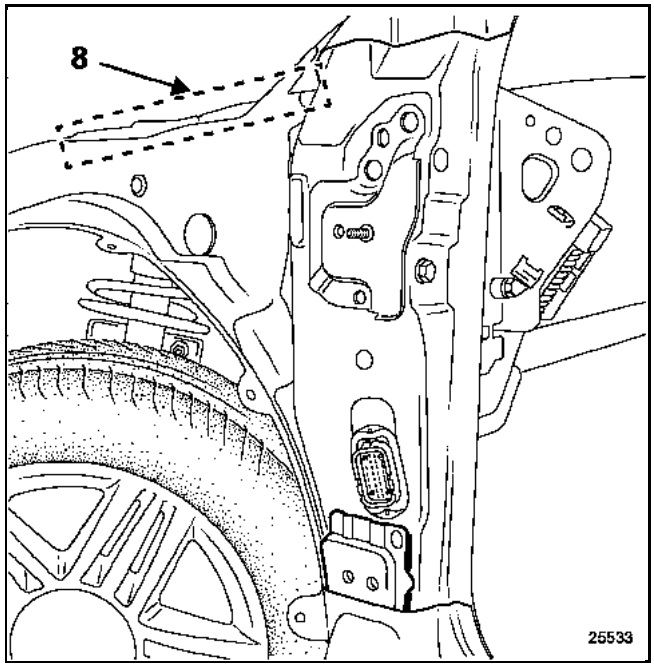

8 – Mastic area

- Apply protection products:
  - Protecting hollow sections (See **Technical Note 592A, 94B, Protection product application procedure, protecting hollow sections**).
  - Filling and sanding (see **MR 400 page 40A, General information, Edge to edge partial replacement connections: Description**).
  - Paint application (see **Technical Note 592A, 94A, Panel paint application, preparation and procedure for repaired components**).

REFITTING
- Refit:
  - the A-pillar wiring harness
  - the engine compartment connection unit
  - the door sill lining
  - the dashboard
  - the front wing upper mounting bracket
  - the front wing
  - the bonnet hinges
  - the bonnet
  - the front headlight
  - the front bumper
  - the wheel arch protector
  - the front wheel

- If one of the two lower mounting spot welds on the door box section is not cracked:
  - Refit the front door.
  - Reconnect the UCH connectors.
  - Reconnect the battery (see **MR 364, 80A, BATTERY, Battery: Removal - Refitting**).

- If one of the two lower mounting spot welds on the door box section is cracked:
  - Replace the front door.

REPLACEMENT OF A FRONT DOOR

- Replace the door
  (see **MR 364, 47A, Side opening elements, Front side door**).
  Note: Carry out adjustments
  (see **MR 364, 40A, General information, Panel gaps**)

- Reconnect the UCH connectors.
- Reconnect the battery (see **MR 364, BATTERY, Battery: Removal - Refitting**).

Parts required

For the left-hand side

Quantity and description of parts		Part no.
1	A-pillar upper hinge reinforcement - assembled	**77 82 539 786**
1	Front left-hand body side	**77 51 473 717**
1	Lining reinforcement	**77 82 082 851**

For the right-hand side:

Quantity and description of parts		Part no.
1	A-pillar upper hinge reinforcement - assembled	**77 82 539 787**
1	Body side front right-hand section	**77 51 473 721**
1	Lining reinforcement	**77 82 082 852**

If replacing a front door

In accordance with the Replacement Parts Catalogue or Dialogys.

1	Front door

Time required

Code	Description	Time
0177	Interior cleaning, dusting, vacuuming of carpets, seats and luggage compartment. Cleaning inside vehicle windows Cleaning interior plastic components	0.9
0331	Vehicle programming after disconnecting battery	0.3
0343	Locking and unlocking airbag computer	0.5
4635	Replacement of scuttle side panel stiffener (including door removal and refitting, etc.)	5.8
5527	Partial replacement of A-pillar	7.5
5528	Replacement of upper hinge reinforcement	1.0
7661	Welding 2 beads to lower hinge reinforcement	0.3
9353	Injection of product into hollow sections.	0.2
9011	Class 1 package preparation for painting vehicle parts and Parts Department	2.1
9237	Class 1 A-pillar painting	1.2
	TOTAL	**19.8**

If replacing a front door

Additional time required

Code	Description	Time
4392	Stripping and rebuilding 1 front door	1.8
6644	Painting front door 3-door hatch	2.9
9077	Painting front door 5-door hatch	2.5
4389	Adjusting door hinges	0.4
	TOTAL **3-door hatch** **5-door hatch**	 **5.1** **4.7**

CLAIM COMPLETION AND CODING

When to take action
– Upon receipt of a customer complaint.

Tooling required
– Standard bodywork tooling.

Destination of removed parts
– In accordance with warranty directives.

Codification items

- **With PGCS**

– Directory function:

Description	Code
BODY AND TRIM	**001**

– Cause part no.: **77 82 539 786 or 77 82 539 787**

- **Without PGCS**

– NITG code: **C221**

- **With or without PGCS**

– Supplier code: **050**
– Customer complaint code: **5P**

19 REPAIR OF PLASTIC FUEL PIPES

- Engine:
- Gearbox:

Basic manual:

This Technical Note concerns quick operations on plastic fuel pipes to facilitate repairs using removal tools **Mot. 1260** and **1260-01** and cutting tool **Mot. 1352**.

"The repair methods given by the manufacturer in this document are based on the technical specifications current when it was prepared.

The methods may be modified as a result of changes introduced by the manufacturer in the production of the various component units and accessories from which his vehicles are constructed."

All copyrights reserved by the Régie Nationale des Usines Renault.

Copying or translating, in part or in full, of this document or use of the service part reference numbering system is forbidden without the prior written authority of the Régie Nationale des Usines Renault.

© Régie Nationale des Usines Renault S.A.1995

REPAIR

It is now possible to repair **plastic** fuel pipes without having to completely replace them.

PRESENTATION

Two specific parts, each of 8 and 10 mm diameter, are required to ensure the repair to the fuel pipes:

- A double quick release **union**, of the same type as those fitted to the original pipes, ensures a tight seal is made.
- A 90° elbow tube (length 1.50 m) with a fixed plastic end section allows, using one of its ends:
  - a flexible pipe to be connected (rubber hose),
  - or a pipe to be routed through a right angle.

DESCRIPTION	PART NUMBER
Double union diameter 8mm	77 01 038 858
Double union diameter 10 mm	77 01 038 859
Elbow tube diameter 8 mm	77 01 038 860
Elbow tube diameter 10 mm	77 01 038 861

IMPORTANT : during all operations on the fuel tank or fuel pipes, do not smoke and keep all sources of heat or sparks away from the working area.

DESCRIPTION AND USE OF THE DOUBLE UNION

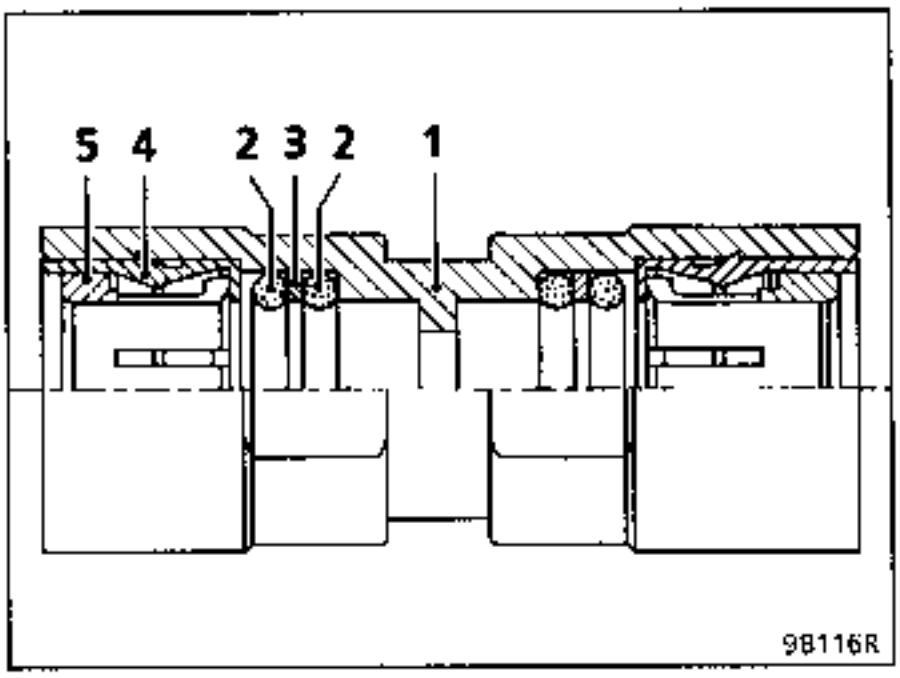

1 Body
2 O ring X 2
3 Washer
4 Dowel
5 Clamp

FITTING

Push the union directly on to the pipe, ensuring the correct diameter is used for the pipe in question.

ATTENTION : as shown on the diagram, two O rings ensure the fittings are sealed. The pipe must therefore be pressed securely on to the union.

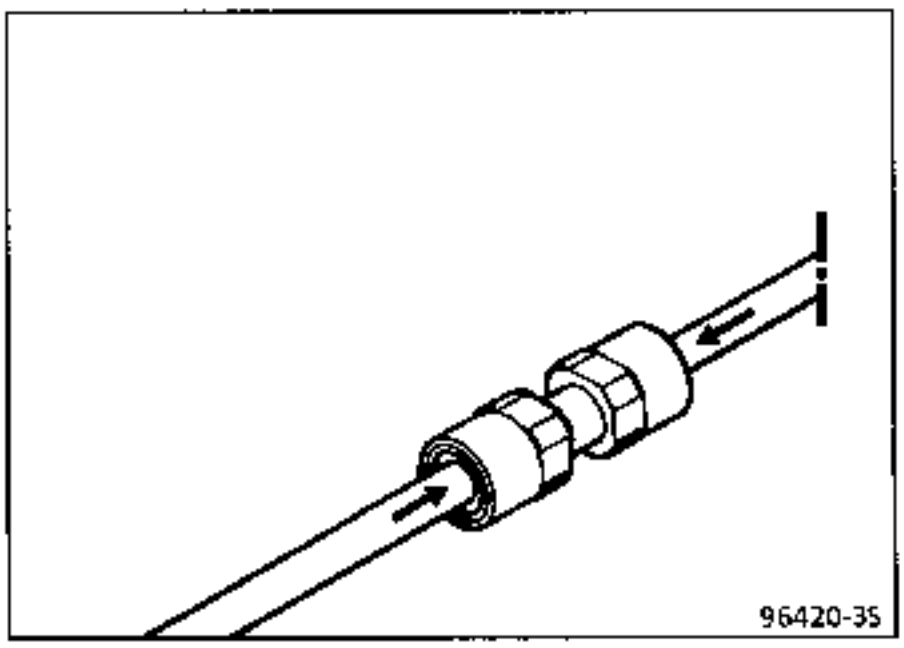

REMOVAL

The double union may be removed using pliers **Mot. 1265** and **1265-01** depending on the pipe diameter.

POSITIONING PLIERS MOT. 1265 OR 1265-01

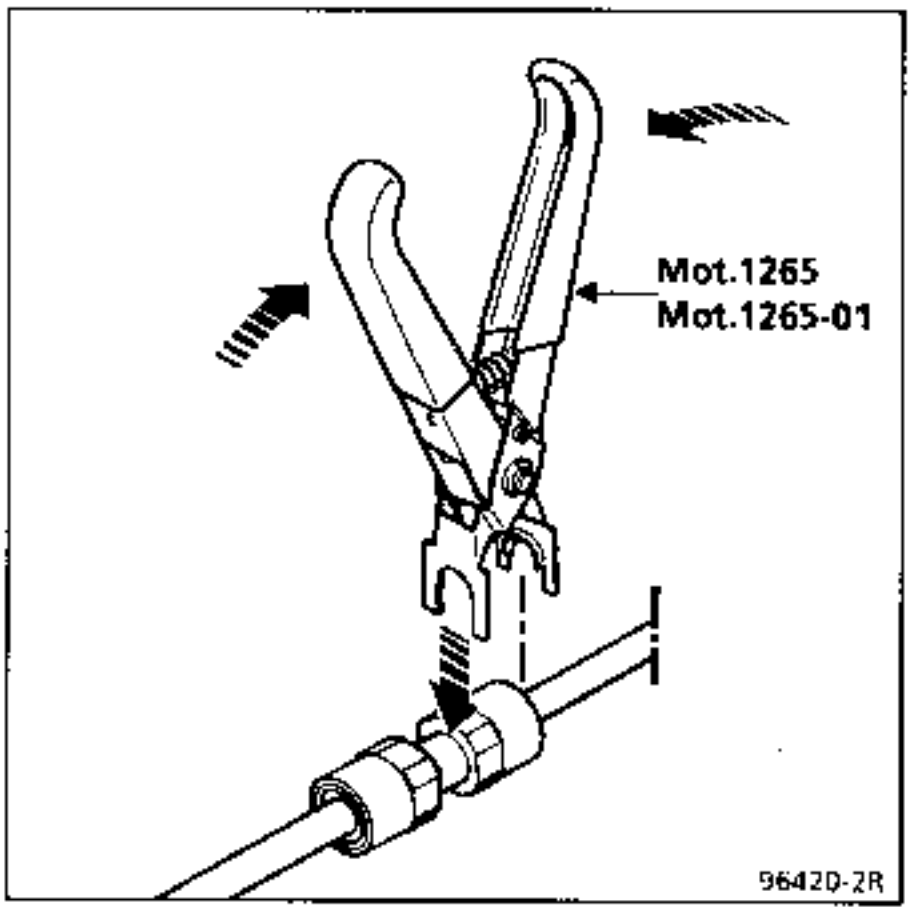

CUTTING THE PIPE

To avoid damaging the two O rings in the union when the fittings are pressed together and to ensure perfect sealing, use the special tool to cut the pipe (**Mot. 1352**).

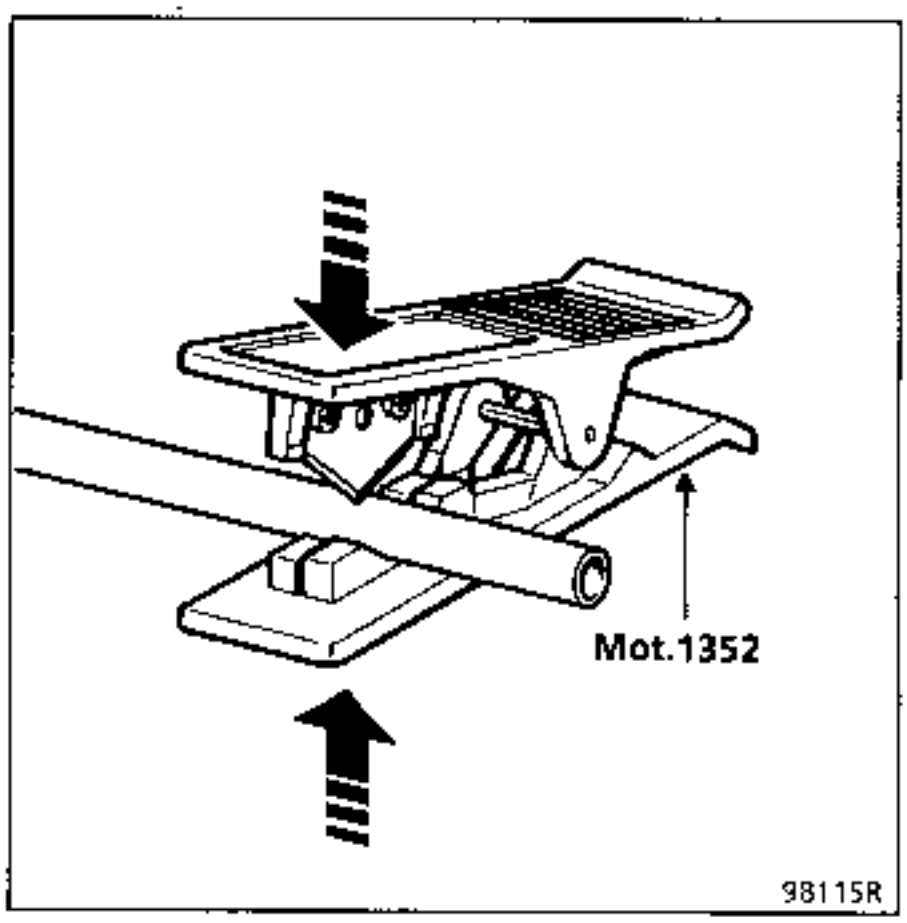

METHODS FOR REPAIR OF FUEL PIPES
(example : Twingo)

IMPORTANT : plastic pipes may only be repaired when cold. Never use a flame or any other source of heat to work with this material.

1st case

REPAIR IN THE ENGINE COMPARTMENT

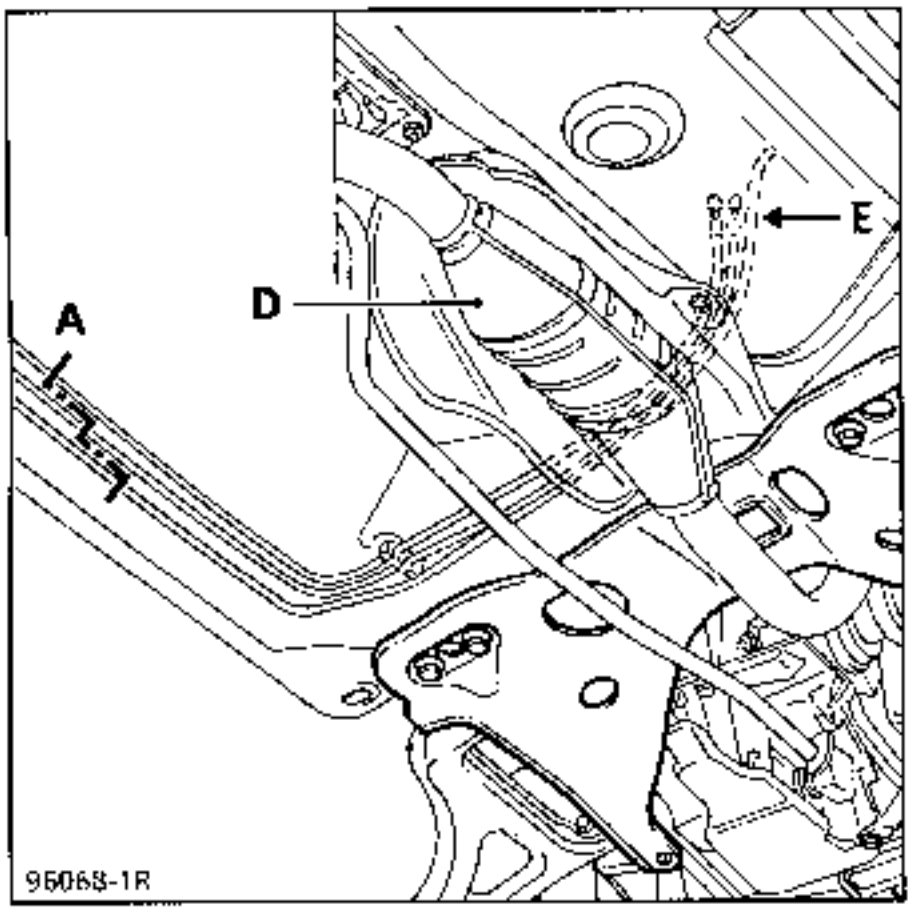

Using tool **Mot. 1352**, cut the three pipes at staggered intervals as shown in the diagram (reference A) to make room for the double unions.

IMPORTANT : for safety reasons double unions may not be fitted to pipes between the engine compartment and the catalytic converter or the expansion box (D). These unions should be fitted as far away as possible from these units: no double unions should be fitted within 50 cm of the catalytic converter; the complete pipe must be replaced.

Replace the **fuel supply and return pipes** with two repair pipes fitted with end section (E), so that the same type of connection for rubber hoses is provided and cut the elbow at 90° (using tool **Mot. 1352**).

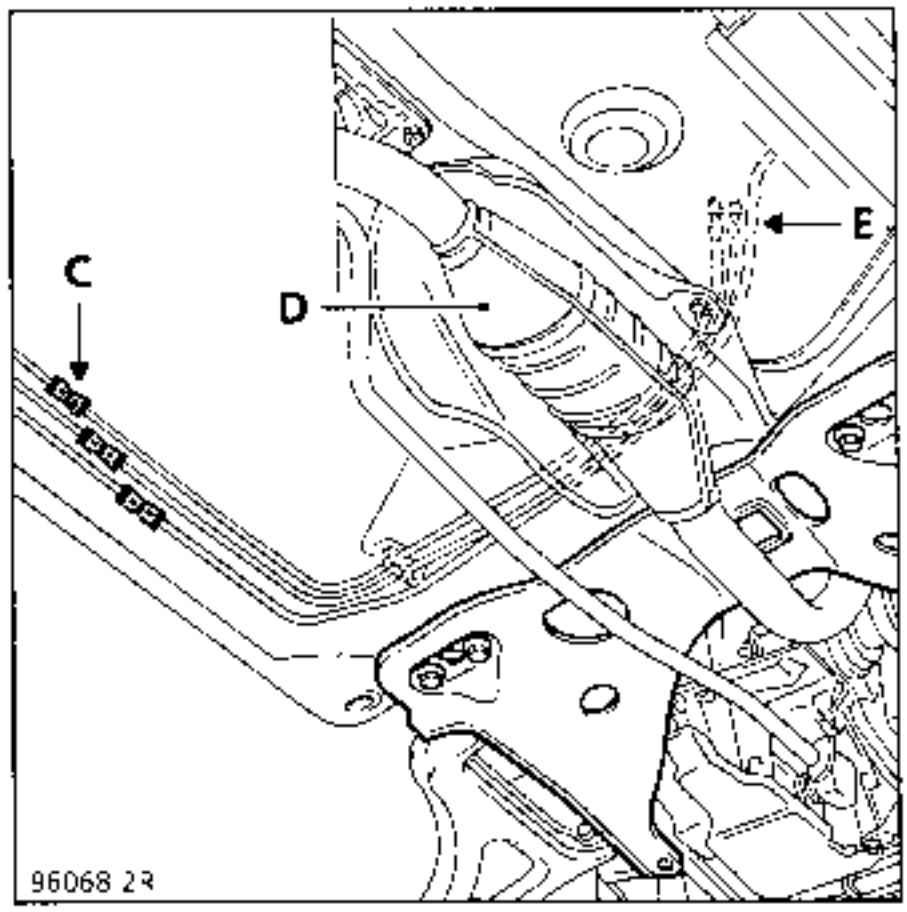

Connect the assembly to the original pipe (after cleaning them) using two double unions (C) of the correct diameter.

Replace the **fuel vapour recirculation pipe** using a section of repair pipe, which has been cut to the correct length at each end, and make the connections on the canister end (F) and the fuel tank end (C) using two double unions.

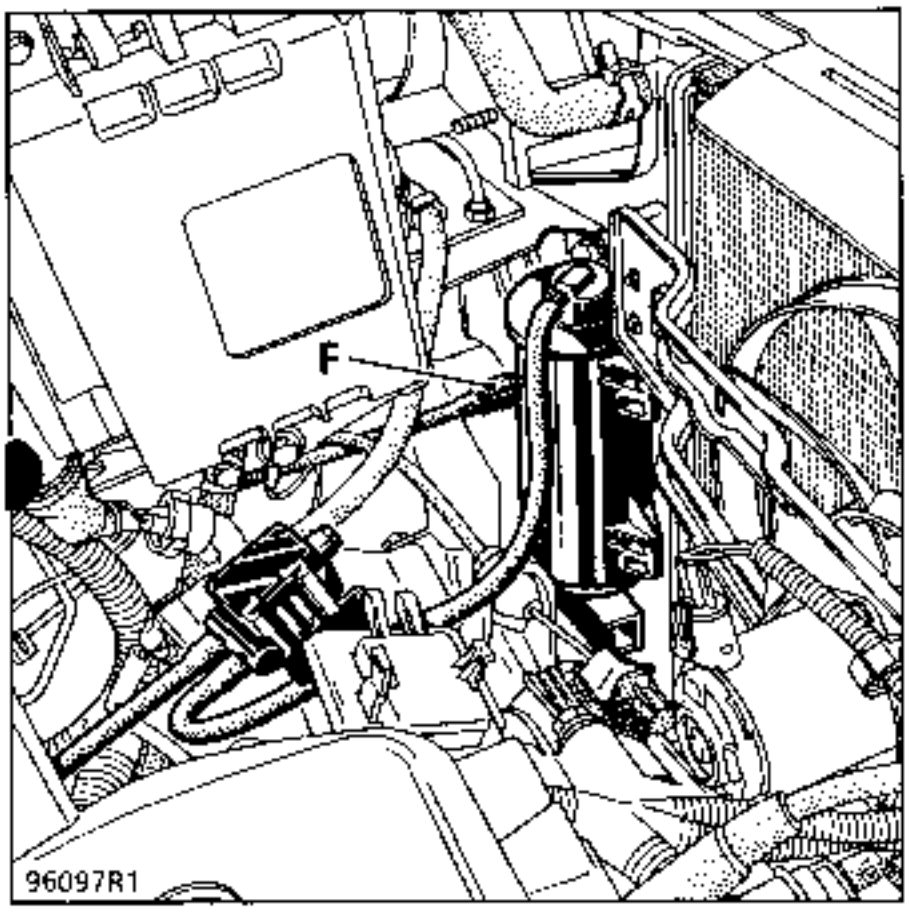

REMINDER: press the pipe firmly into each union in order to ensure perfect sealing of the two internal O rings.

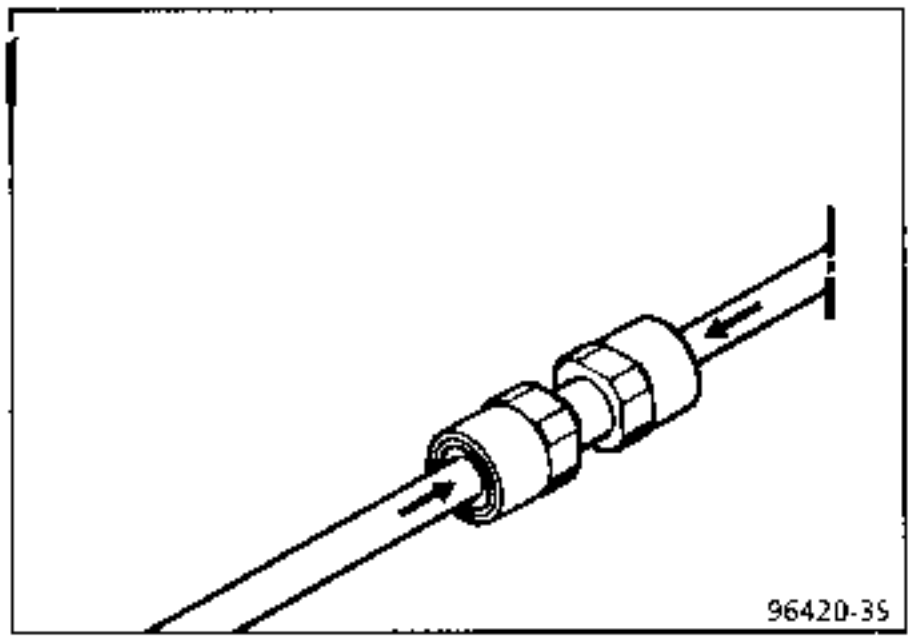

2nd case

REPAIR OF INTERMEDIATE PIPES

Partial replacement of intermediate pipes for the section between the catalytic converter or the expansion chamber and the fuel tank is made using repair pipes.

To do this, cut the pipe to the required length (1.50 m maximum), or, depending on the pipe routing, use the 90° elbow pipe.

The connection at each end is made using double unions.

For longer sections of pipe, replace the pipe with a pipe from the Parts Department.

3rd case

REPAIR AT THE FUEL TANK

The pipes to the fuel tank have a very difficult routing, depending on model, and the complete replacement pipe from the Parts Department should be used

- either to replace the complete fuel pipe,
- or to replace the fuel tank section.

In the second case, follow the method described below.

REMOVAL

Using tool **Mot. 1352**, cut the two pipes for fuel supply and return and fuel vapour recirculation at staggered intervals as shown in the diagram (A).

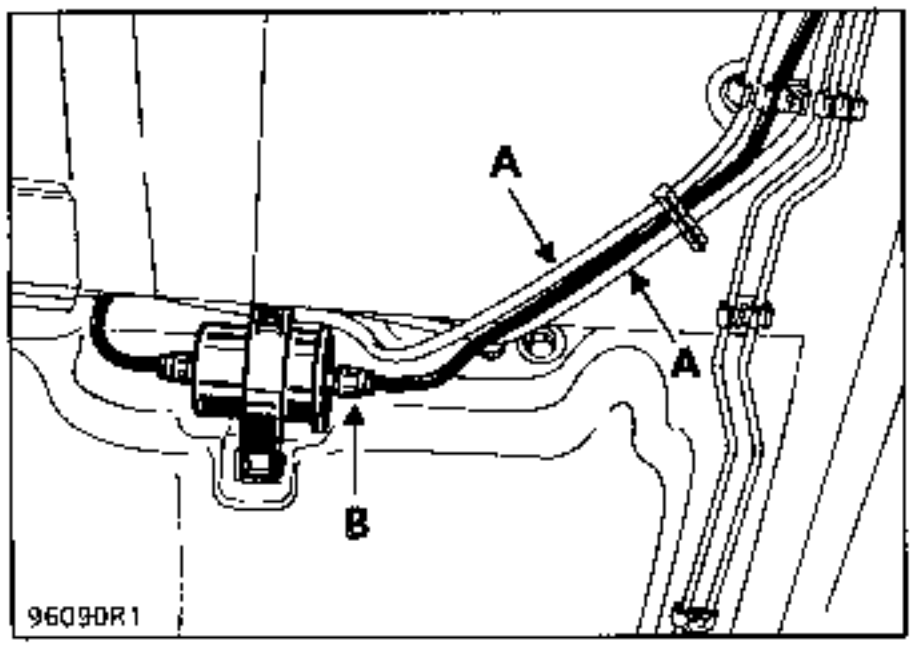

(example : Twingo)

Disconnect the single union (B) using pliers **Mot. 1265**, then remove the fuel tank as described in the Workshop Repair Manual.

Replace the corresponding fuel tank pipes.

REFITTING

After refitting the fuel tank, connect the assembly to the original pipes (after cleaning them) using two double unions (C) of the correct diameter.

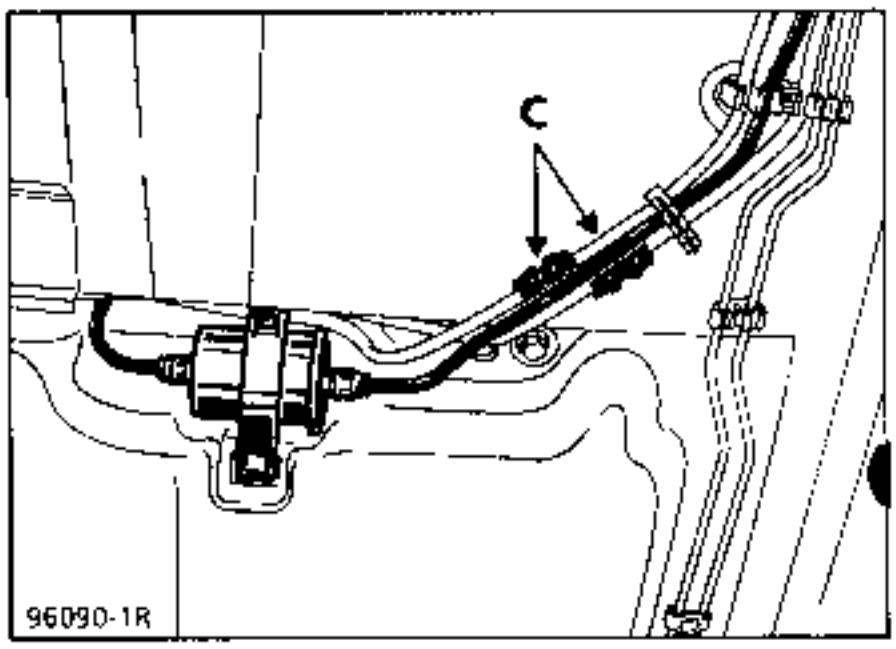

NOTE

- This type of connection may be used to facilitate removal of the fuel tank.
- At the fuel gauge sender unit end, the repair of an original single quick release union may be made using a double union.
  In this case, cut the fuel tank pipe right next to the sender unit and fit a double union of the correct diameter in place of the damaged single union.

	Type	S/Section
ALL TYPES	XXX X	80

80 CONDENSATION, PENETRATION OF WATER INTO HEADLIGHT

Other sub-section concerned : **08**

- Engine: **XXX**
- Gearbox : **XXX**

Basic Manual : **Depending on vehicles concerned**

CUSTOMER COMPLAINT
- Presence of condensation or misting on the headlight glass or water penetration.

POSSIBLE CAUSE
Water penetration
- sealing at front of headlight,
- sealing at rear of headlight.

Condensation or misting: natural phenomenon:
- Check ventilation and drying holes in headlight.

Accounts procedure :

Destination of removed parts :
- As per Warranty Policy and Procedures Manual.

New NITG Code : **V121**
Old NITG Code : **8031**

Supplier Code : **See identification on part**

Customer Complaint Code : **4A**

Operation Code : **8999**

Time allowed : **0.3 h**

Title: Checking headlight sealing and drying.

AFTER SALES SOLUTION

Operation to be carried out :
- Check general appearance of headlight.
- Identify if it is condensation, misting or penetration of water into headlight: (see summary overleaf).

Vehicles concerned :
- All vehicles in the range.

When to take action :
- Upon receipt of a customer complaint.

Parts required:
- None.

Tooling required:
- Conventional.

"The repair methods given by the manufacturer in this document are based on the technical specifications current when it was prepared.

The methods may be modified as a result of changes by the manufacturer in the production of the various component units and accessories from which his vehicles are constructed".

All copyrights reserved by Renault.

Copying or translating, in part or in full, of this document or use of the service part reference numbering system is forbidden without the prior written authority of RENAULT.

© RENAULT 1997

DESCRIPTION OF THE OPERATION

HEADLIGHT
Penetration of water or misting, condensation

CHECKING FRONT OF HEADLIGHT

Water jet test:
Direct a jet of water on the headlight glass → does water penetrate?

yes → Change headlight.

no ↓

VISUAL CHECK OF BACK OF HEADLIGHT

Rear cap incorrectly fitted.

yes → Fit rear cap in correct position.

no ↓

Beam adjuster incorrectly fitted.

yes → Fit beam adjuster in correct position.

no ↓

Wiring incorrectly positioned.

yes → Rectify cable routing.

no ↓

Ventilation holes blocked.

yes → As far as it is possible, remove the blanking covers over the vent holes.
Check for covers or plugs.

no ↓

There is condensation or misting in the headlight.

yes → Explain to the customer that this is a natural phenomenon which does not constitute an incident and there is no risk of corrosion (see section in driver's handbook entitled **operating incidents**) .
The condensation will disappear when the headlights are switched on; the amount of time it takes for the condensation to disperse depends on the humidity of the ambient air.

CONDENSATION DOES NOT ALTER THE STANDARD OF LIGHTING.

NOTE :

- If the customer insists that you take some action, dry the headlight as follows:
  - Blow dry air, if possible (such as the type of air used for paint booths).
  - Dry naturally by switching on the headlamps for a few minutes until the condensation disappears.

All types

Type: XXX X

S/Section: 14

14 ANTI-POLLUTION TEST - DIESEL ENGINES

- Engine : **XXX**
- Gearbox : **XXX** **Basic manual** : **XXX**

This technical note provides details of :

- the anti-pollution standards,
- the test equipment approved by **RENAULT**,
- the method to use to carry out an anti-pollution test,
- the fault-finding procedure to be carried out if a diesel engine does not meet the anti-pollution standard,
- the equipment to protect against the noise caused when carrying out an anti-pollution test.

Contents

14 ANTI-POLLUTION

Diesel smoke opacity 14-1
Test procedure 14-3
Fault-finding 14-6
Soundproofing the test area 14-8

The repair methods given by the manufacturer in this document are based on the technical specifications current when it was prepared.

The methods may be modified as a result of changes by the manufacturer in the production of the various component units and accessories from which his vehicles are constructed".

All copyrights reserved by Renault.

Copying or translating, in part or in full, of this document or use of the service part reference numbering system is forbidden without the prior written authority of RENAULT.

© **Renault 1998**

DIESEL EXHAUST EMISSION OPACITY

The smoke opacity of the exhaust gases come from the presence of carbon particles given off from the diesel combustion. The greater the number of particles, the higher the smoke opacity and therefore the higher the level of pollution.

ANTI-POLLUTION STANDARD / REGULATIONS

The measurement of the smoke opacity in the technical inspection (MOT in the UK) has been applied since the **1st December 1993** in Germany and since the **1st July 1994** in Switzerland. In France this application has been in effect since the **1st January 1996**.

All vehicles which emit excessive diesel smoke must be repaired.

Vehicles registered before **1st January 1980** are not submitted for an inspection.

UK Market
Vehicles registered / used before the **1st August 1979** are submitted for a less rigorous MOT Test (please refer to the MOT Inspection Manual for details).

VALUES WHICH DIESEL VEHICLES MUST MEET

- Diesel atmospheric : **2.5 m^{-1} (or 64 %)**.
- Diesel turbo : **3 m^{-1} (or 71 %)**.

TEST EQUIPMENT (OPACIMETER)

This enables the luminous opacity to be measured by placing diesel smoke between a light source and a receptor.

The measurement is taken according to the partial flow principle .

The test equipment draws a sample of the exhaust gases given off in through its measuring chamber during the acceleration cycles.

During these tests, the acceleration is defined in the following way : with the engine running at idle speed, the accelerator pedal is activated rapidly, but smoothly, so as to obtain maximum flow from the injection pump. This position is maintained until the maximum engine speed is reached. As soon as this engine speed is reached, the accelerator is released until the engine returns to its idle speed.

To carry out these measurements, **RENAULT** has approved the "**OPTIMA 4030**" opacimeter from **SAGEM**. This equipment is available as a standalone version or as an option for the "**OPTIMA 4040**", **GREEN** and **AGM 1500** gas analysers.

If the test proves the vehicle to be outside of the acceptable levels, then the vehicle must undergo fault-finding diagnosis and the necessary operations carried out to ensure that it conforms to specification.

PRECAUTIONS TO BE TAKEN : VEHICLE PREPARATION

ATTENTION : It is essential that the vehicle is correctly prepared for the test.

The engine must be warm to prevent damaging the engine or the automatic gearbox.

The engine oil temperature must be greater than **80°C**.

Do **NOT** run the vehicle at idle speed to warm the engine prior to carrying out the test as this leads to fouling of the exhaust line (and will affect the test results).

For vehicles that are heavily coked, it is advisable to carry out a road test at high engine speed (to de-coke the exhaust line).

The maximum governed engine speed not loaded should be checked on the rev counter (an engine speed that is too high is an instant test failure).

CARRYING OUT AN ANTI-POLLUTION TEST

There are two test procedures :

- **Procedure for technical inspection (MOT in UK) and road test (A)**
  (to determine the pollution level of the vehicle). <u>For UK Market, please always refer to the MOT Inspection Manual for the method in case of any updates).</u>

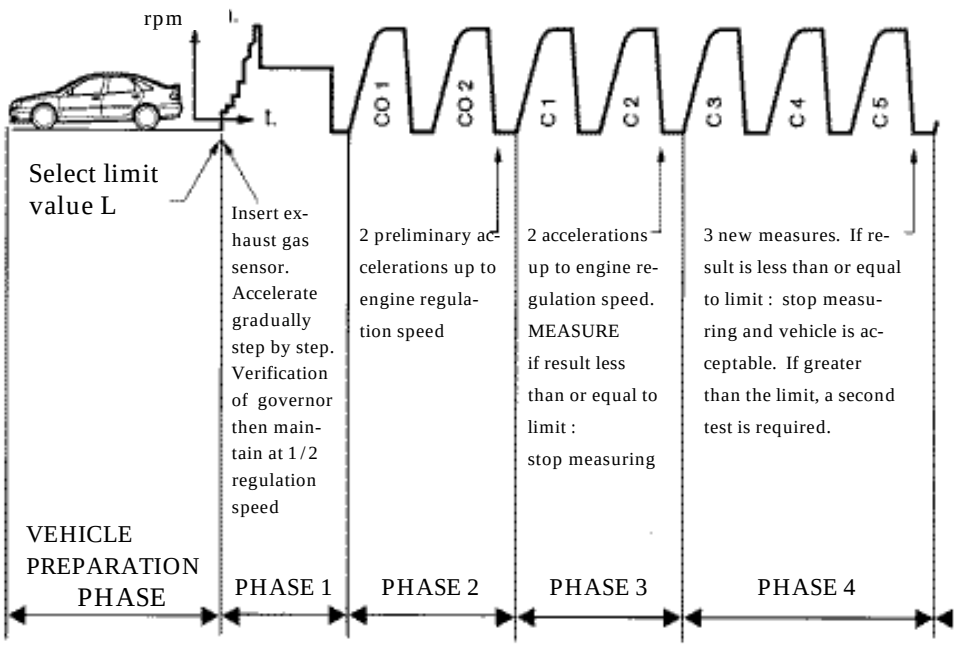

- **Procedure for determining pollution level for workshops (B)**
  (exact determination of the smoke opacity value)

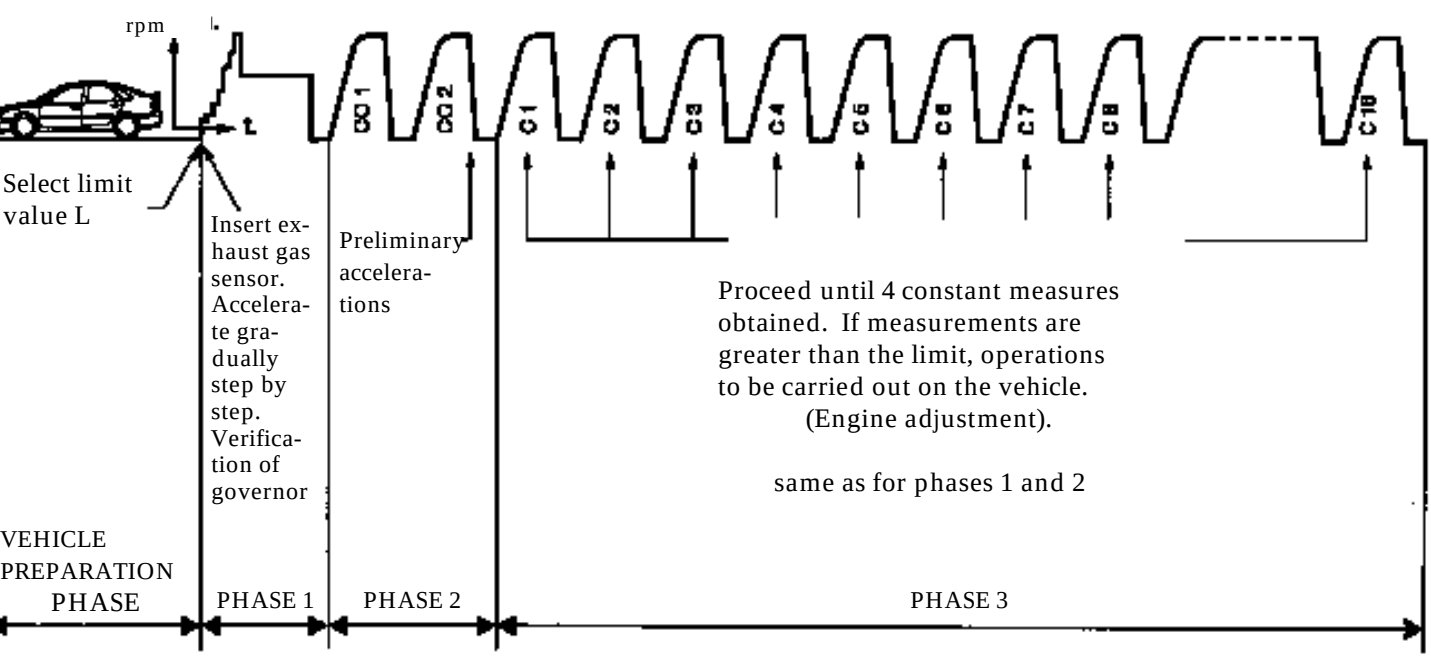

A - Test procedure for technical inspection (MOT in UK) and road test

Vehicle preparation phase

- Check the exhaust system for leaks.
- Gearbox selector lever in neutral.
- Any accessories which affect rotation of the engine must not be switched on.
- The engine should be at its operating temperature (≥ **80°C**).

Phase 1

- Insert the exhaust gas sensor to raise the sensor temperature.
- Accelerate per bearing and check the governed engine speed (total time **30 seconds**).
- Maintain at mid engine speed (**30 seconds**).

Phase 2

- Carry out two successive preliminary accelerations, which are not taken into account; these accelerations are to ensure the engine is warm and to eliminate any soot and residue from the exhaust system.

Phase 3

- The test measurement is made during the two accelerations which are carried out immediately after the first two accelerations.

• **Acceptable limits :** diesel atmospheric : **2.5 m^{-1} (64 %)** - diesel turbo : **3 m^{-1} (71 %)**

If the result is less than or equal to the limit : stop measuring - the vehicle has passed the test.
If the result is higher than 1.5 times the limit : the vehicle has failed and a re-test is required.
If the result is higher than the limit, but is less than 1.5 times the limit, proceed with phase 4.

Phase 4

A series of three accelerations will need to be carried out.
If the result is less than or equal to the limit, stop measuring - the vehicle has passed the test.
However, if the value is higher than the limit, a re-test is required.

To limit the amount of pollution in the workshop when these tests are being carried out, it is necessary to use an exhaust gas extractor kit. This is made up of a breather hood and an auxiliary fan mounted on a mobile unit and connected to the existing evacuation system if the absorption capacity of the existing system is sufficient.

An increased suction flow is needed for good extraction of smoke fumes, however, **it must not exceed the absorption capacity of the existing system.** To connect an auxiliary fan with a flow rate of **1 900 m^3/h** off-load (which is approximately **1 500 m^3/h** in real terms), the installation must have an absorption capacity of **1 600 m^3/h**, which is the current equipment level of four workstations.

To maintain a sufficient level of air flow, it is recommended that the auxiliary fan is connected to the exhaust gas extraction system by shunting the exhaust extraction hose reels. It is also possible to connect this fan to an outlet direct to the outside air.

B - Procedure for determining the level of pollution for the workshop

Vehicle preparation phase

The preparation phase and phases **1** and **2** are the same as for the procedure described on the previous pages. Only the measuring phase is different.

Phase 3 : measuring

All of the instruments needed to test the vehicle must be used (for example, engine oil temperature measurement sensor, rev counter).

Following the system "**operator guide**" instructions for the opacimeter, a series of **16** accelerations will be carried out .

The smoke opacity values are noted for each acceleration until constant values are obtained. The values obtained are considered to be constant when 4 consecutive values are obtained with a range equal to **0,25 m^{-1}** and are not decreasing. The value to be used is the mathematical average of these four values.

If obvious incorrect readings are appearing, the measuring procedure of the visible emissions will have to be stopped and the necessary repair operations will have to be carried out (engine adjustment).

OPERATIONS TO BE CARRIED OUT IF A VEHICLE FAILS TO MEET THE ANTI-POLLUTION TEST STANDARDS

Order of operations	Incident	Operation to be carried out
1	Engine coked	Carry out a road test. Accelerate / decelerate continuously between **3 600 rpm** and **4 000 rpm** in 3rd gear. The test should be carried out over a minimum distance of **6 miles (10 km)** (do not drive at full-load : full flow).
2	Exhaust	Check the exhaust system for leaks.
3	Injection pump	Check the sealed sections of the injection pump. If the fuel flow adjustment screw is no longer leaded or does not have a paint mark and it has been modified → remove the pump for adjustment at a specialised Injection Centre.
4	Components correct to specification	Check the following are correct to specification : - exhaust line, - injection pump (check the supplier number), - injectors (check the supplier number).
5	Electrical faults in the injection system	Using the fault-finding test box (**XR25**, **NXR**), check : - that there are no faults, - that the vehicle complies with the conformity test.
6	Cold start advance	Check that the cold start advance is operating correctly.
7	Filters	Check the condition of, and if necessary, change : - the air filter + clean the exhaust / inlet manifold, - the diesel fuel filter.
8	Engine adjustment	Check the idle speed + residual idle speed.
9	Oil	- Check the level and condition of the oil. - Check the oil vapour rebreathing circuit (pipes).
10	Diesel fuel circuit	Clean the high pressure circuit. Use a diesel engine kit, Part No.: **77 01 423 188** relating to Technical Note No. **1592**.
11	Intercooler	Check to make sure that the cooler is not broken, obstructed or loose.
12	EGR	Check the adjustment of the microswitch or the potentiometer. Check : - that the vacuum pipes are correctly connected, - that there is no continuous vacuum on the solenoid valve (connect and then disconnect the vacuum pipe from the solenoid; at idle speed, this should not affect the idle speed), - the **EGR** valve for leaks (remove the **EGR** valve, insert a plate between the valve and the engine, refit the **EGR** valve and check the smoke opacity).

Order of operations	Incident	Operations to be carried out
13	Exhaust	Check : - that the exhaust line is correct to specification, - the value of counter-pressure at the exhaust (with the oxidation box plugged).
14	Injection pump	Check the injection pump timing.
15	Injector	Check : - conformity, - calibration, - the shape of the nozzle.
16	Engine compression	Check that the pressure at the end of the compression phase is greater than **27 bars for indirect diesel injection** and **22 bars for direct injection** and that the difference in pressure between the lowest and highest cylinder does not exceed **4 bars**.
17	Timing	Check that the timing is correctly adjusted.
18	Valves	Check the adjustment of the valve clearances.
19	Injection pump	Remove the pump for adjustment to be carried out at a specialist Injection Centre.

Following each operation, if a fault is detected, carry out an anti-pollution test.

PROTECTION AGAINST NOISE

The average noise levels obtained during an anti-pollution test are approximately **95 dB** with a maximum value of **100** to **103 dB** obtained during the maximum engine speed regulation section of the test.

The scale of noise levels measured in **dB** is a logarithmic scale and not a linear scale. Therefore, when the noise level **increases by three decibels, it is in fact twice as loud**.

Legal obligations :

The **85 dB** imposed noise level limit is not an indication of comfort level, but is the maximum level above which there are very real risks to the hearing.

In the following pages, there are details of two types of equipment aimed at treating noise levels.

The first solution guarantees a **16 dB** reduction in noise pressure and the second system guarantees a reduction of **8 dB**.

CAPAM 16 ILLBRUCK

Product definition

This equipment is aimed at treated noise levels relating to the measurement of diesel smoke opacity in the workshop.

Product design

This equipment is a mobile unit comprising a silencer (acoustic baffle with flexible segments), dimensions **1 800 x 750 x 750 mm** and can be placed in contact with the vehicle radiator grille panel.

An acoustic one-piece cover made of polyurethane foam (complex material with floating weight) covers the vehicle bonnet and is suspended by two solid metal arms which rotate on the structure. The load is compensated by two gas cylinders. Storage is made easy by the availability underneath the mobile unit of four small multi-directional wheels, two of which have brakes.

The arms can be removed by simple screw fixings, which enables the volume of the equipment to be transported. The dimensions are as follows : Length **2 000** x Width **1 500** x Height **1 900 mm**. The weight of the equipment is approximately **300 kg**.

Installation :

The absorption cover on the mobile hinged support frame is fitted at the front of the vehicle, totally covering the vehicle up to the base of the windscreen. The equipment also has an anti-noise mat which is fitted underneath the engine compartment.

An acoustic baffle placed in front of the vehicle **prevents overheating** of the engine and guarantees excellent acoustic protection.

This equipment can be quickly and easily installed by just one operator.

This solution provides a noise reduction of 16 dB.

Technical specifications :

* The structure of the mobile unit is made from steel tubing, storage is made easy by the availability underneath the mobile unit of four small multi-directional wheels, two of which have brakes.

* One-piece polyurethane foam cover (complex material with floating weight).

* Acoustic baffle, dimensions **1 800 x 750 x 750 mm**.

* Approximate weight **300 kg**.

* **Approval N° : 662 400**.

* **Price : Refer to the equipment catalogue. (Not required for the UK Market).**

Distributor : **CISCAR**
Rue Charles Despeaux
78400 CHATOU
Tél : 01 34 80 40 00
Fax : 01 30 53 40 01

OPASON REST'AGRAF

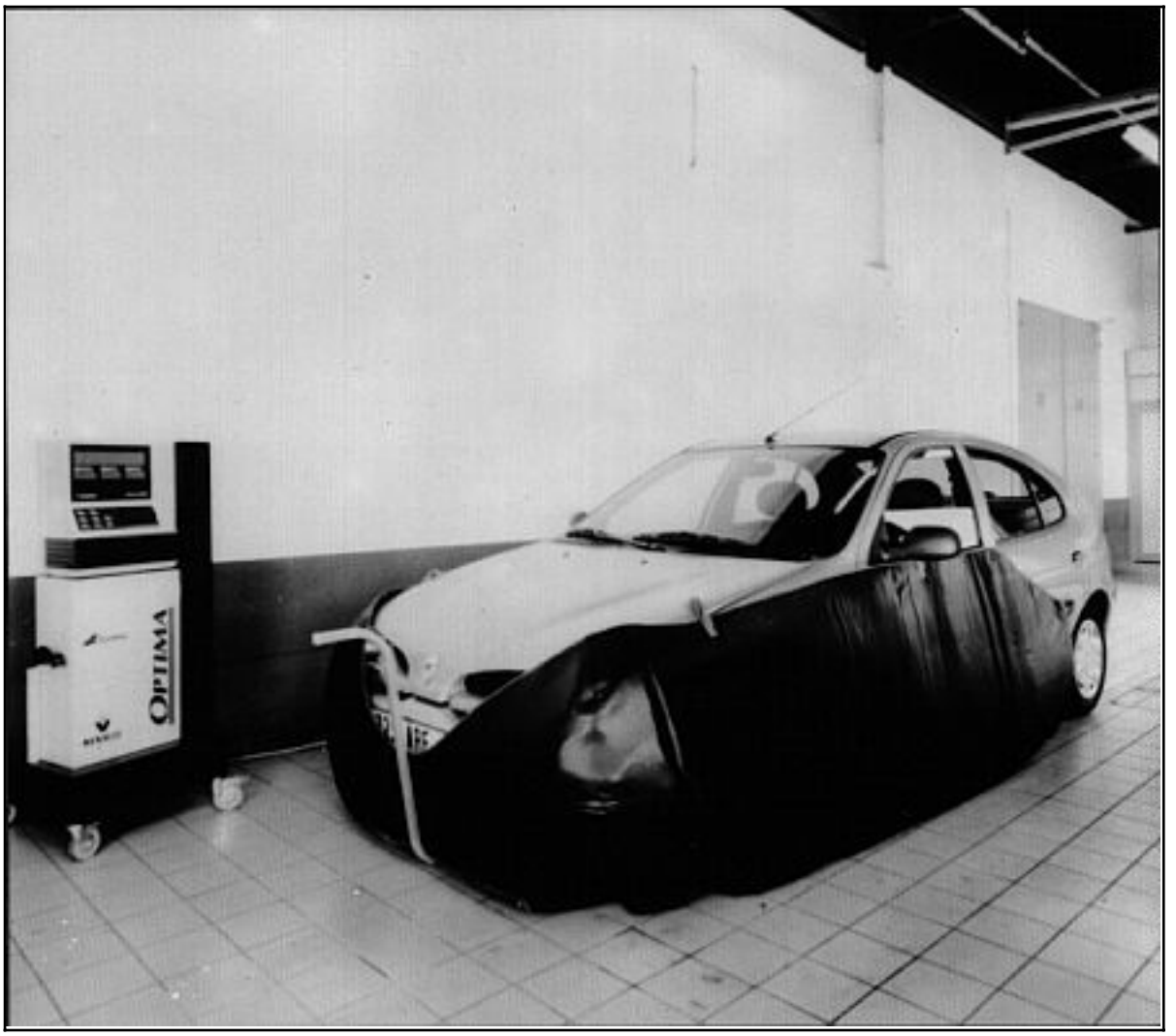

Product definition

Designed to reduce noise levels when carrying out diesel smoke emissions testing using an opacimeter.

Product design

- A mobile unit mounted on small wheels and supplied with a handle which enables the equipment to be moved from one vehicle to another.
- This mobile unit, supplied with an anti-noise shield, slides underneath the vehicle.
- The side panels are wheeled from one section of the vehicle to another, trapping the noise. These panels are held on the external rear view mirrors and doors by a system of flexible supports.
- A cut-out section at radiator grille level is designed to limit engine overheating.
- For older, poorly soundproofed vehicles, it is possible to obtain a bonnet cover as an option
  Approval N° : 650 901.

Installation :

This solution guarantees a reduction in noise pressure levels of 8 dB.

NOTE : This type of equipment is only suitable for short test procedures (of the technical inspection (MOT test) type). As a result, when test measuring is over an extended period of time, watch the temperature indicator and take precautions to prevent any risk of the engine overheating. In fact, 70 % of the air intake is through the bumper and in this case, engine cooling may be insufficient.

Technical specifications :

* Mobile unit constructed of electro-zinc plated steel.

* Vehicle underbody and top cover (option).
  Soundproofing equipment and glass fibre resistant to **500°C**.

* Side protections :
  - Bodywork side : unwoven polypropylene, designed not to scratch paintwork.
  - Exterior : simulated black leather finish.
  - Reinforced flexible supports.

* **Approval N° : 650 900** **Bonnet cover option, Approval N° : 650 901**

Distributor : **REST'AGRAF**
Boîte postale 90
Le Cassiopée
34, rue Mozart
92112 CLICHY CEDEX
Tél : 01 41 27 41 27
Fax : 01 41 27 41 37

(Not required for the UK Market).

ALL TYPES

Type: XXX X

S/Section: 13

13 METHOD OF FITTING THE DIESEL FUEL SUPPLY PIPES

- Engine : XXX
- Gearbox : XXX

Basic Manual : All Workshop Repair Manuals

This note describes the method for fitting the diesel fuel supply pipes supplied as replacement parts.

Failure to observe this method will cause the centring lugs to break and they could be sucked in by the injection pump.

The repair methods given by the manufacturer in this document are based on the technical specifications current when it was prepared.

The methods may be modified as a result of changes by the manufacturer in the production of the various component units and accessories from which his vehicles are constructed".

All copyrights reserved by Renault.

Copying or translating, in part or in full, of this document or use of the service part reference numbering system is forbidden without the prior written authority of RENAULT.

© RENAULT 1998

REPLACING THE DIESEL FUEL SUPPLY PIPES

Certain pipes have an opening to enable the diesel supply circuit to be bled at the factory. A plug (A) seals this opening (any plug which is locked in position cannot be removed without carrying a risk of breaking).

The pipes supplied as replacement parts are issued with this plug (A) which is not locked in position. To ensure that it is correctly fitted, it is essential to observe the following method :

- fit the plug (A) into the opening (B) by aligning the centring lugs (C).

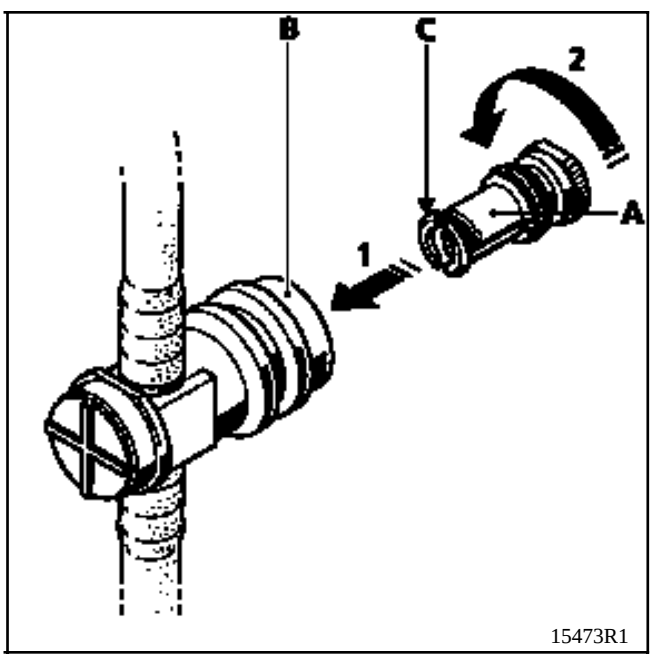

- Turn the plug by a quarter turn to engage it into the opening (B).

- Push the plug well in to lock it in position.

ATTENTION : If this method is not correctly observed, the centring lugs may break and, via the fuel supply pipe, fall into the injection pump.

UNDER NO CIRCUMSTANCES SHOULD THE PLUG BE FORCE FITTED INTO THE OPENING.

All types

Type	S/Section	
XXX X	31	35

31 DISCONTINUATION OF ZINC APPLICATION ON WHEEL HUBS

Other sub-section concerned : 35

- Engine : **XXX**
- Gearbox : **XXX** **Basic Manual** : M.R.

When refitting an alloy wheel, it will be necessary to apply a high temperature resistant grease to the supporting face of the hub (grease type **ANTISEIZE** , Part No. : **77 01 422 307**).

Effectively, as the zinc application to wheel hubs has been discontinued, it is essential to carry out this operation prior to each refitting operation. This is to prevent the wheel from seizing on the wheel hub.

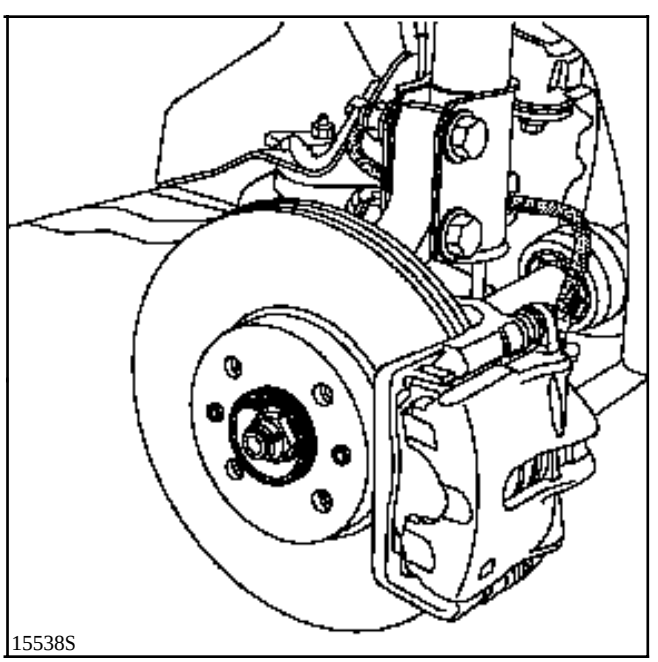

The repair methods given by the manufacturer in this document are based on the technical specifications current when it was prepared.

The methods may be modified as a result of changes by the manufacturer in the production of the various component units and accessories from which his vehicles are constructed".

All copyrights reserved by Renault.

Copying or translating, in part or in full, of this document or use of the service part reference numbering system is forbidden without the prior written authority of RENAULT.

© Renault 1998

RENAULT

Technical Note 3175A

Fault finding
Cooling circuit

Vehicles concerned: see list on the following page

Subsections concerned: 19A

Fault finding procedures for various faults affecting the cooling system and water pumps

77 11 293 182 **Edition 3 - OCTOBER 2005** **EDITION ANGLAISE**

"The repair procedures given by the Manufacturer in this document are based on the technical specifications current when it was prepared.

The procedures may be modified as a result of changes introduced by the manufacturer in the production of the various component units and accessories from which his vehicles are constructed."

All rights reserved by RENAULT s.a.s.

Copying or translating, in part or in full, of this document or use of the service part reference numbering system is prohibited without the prior written authority of RENAULT s.a.s.

© RENAULT s.a.s. 2005

Vehicle	Type
Twingo	X06X
Renault 4	
Renault 5	X40X
Express	F40X
Kangoo	XCXX
Kangoo phase II	XCXX
Clio I	X57X
Clio II	XBXX
Clio II phase II	XBXX
Clio V6	CB1A
Clio V6 phase II	CB1A
Clio Internationale	XB1R
Clio III	XRXX
Renault 19	X53X
Renault 21	X48X
Modus	XPXX
Logan	LS0X
Mégane	XAXX
Mégane II	XMXX
Scénic	JAXX
Scénic II	JM0X
Laguna	X56X
Laguna II	XGXX
Laguna II phase II	XGXX
Renault 25	X29X
Safrane	X54X
Vel Satis	XJXX
Vel Satis phase II	XJXX
Avantime	DE0X
Espace	J11X
Espace II	J63X
Espace III	JE0X
Espace IV	JK0X
Espace IV phase II	JK0X
Trafic	T/PVXX
Trafic II	XL0X
Master propulsion	XHXX
Master propulsion phase II	XHXX
Master	FB/FC
Master	Q/Rxxx
Master II	XDXX
Master II phase II	XDXX
Spider	EF0H
Alpine	D50X

Contents

Page

19A COOLING

Cooling circuit: operation	19A-1
Cooling circuit: operating diagram	19A-2
Water pump: operation	19A-3
Water pump: operating diagram	19A-4
Precautions for fault finding	19A-5
Cooling system: tools and equipment	19A-6
Cooling system: customer complaints	19A-7
Cooling system: fault finding charts	19A-9

All combustion engines in operation produce energy which is divided up as follows:
– part of this energy is mechanical and drives the engine,
– part is heat energy in the form of exhaust gas which is removed in the form of heated coolant which is partly used to heat the passenger compartment. But the heat from the coolant must be removed to maintain the correct operating temperature of the engine.

This is achieved by using a liquid cooling system.

Coolant circulates in (or around) the components to be cooled. This liquid, which has been heated following contact with the hot engine components, is transferred quickly by a pump into a radiator where it cools down and returns to the engine.

The cooling circuit, which must be completely sealed for it to operate properly, is principally composed of:
– an engine block and cylinder head,
– a radiator and engine cooling fan,
– temperature sensors (thermostat, temperature switch),
– a coolant pump,
– an expansion bottle,
– hoses,
– a bleed screw (if fitted to the vehicle),
– a heater matrix,
– coolant,
– and various other components depending on the vehicle model.

A centralised coolant temperature management system has been developed following the development of engine computers. This system uses information provided by a single temperature sensor located on the engine block. This sensor operates the fan unit either at high or low speed via an injection computer. It also operates the coolant temperature warning light located on the instrument panel. When dealing with a vehicle displaying a fault, it is advisable to establish whether the vehicle is fitted with this system or not. This is established by checking whether the temperature switch is at the bottom of the radiator. If a temperature switch is found, there is no centralised coolant temperature management system.

The cooling circuit is fitted with a valve which protects the system from overpressure. The colour of this valve indicates its rating (in bars):

Note:
Reminder of the ratings for the expansion bottle valve:

Expansion bottle valve with:

– a brown spot	1.2 bars
– a blue spot	1.4 bars
– a yellow hand	1.4 bars
– a white hand	1.6 bars
– a grey hand	1.8 bars

Operating diagram: See MR for the vehicle concerned.

Water pump - Description

The water pump's function is to create sufficient flow to dissipate some of the heat generated by combustion, exhaust gases and friction.
Its operating principle involves the conversion of mechanical energy generated by the engine into hydraulic energy to circulate the coolant.
The pump operates as a generator. The flow rate depends on the pressure differential created by the pump and the ease with which water can pass through the cooling system.

General description of a water pump

The operating principle of a centrifugal pump consists of converting mechanical energy into hydraulic energy.

The conversion takes place in two stages:
- the first consists of the conversion of mechanical energy into kinetic energy by the vanes of the impeller;
- the second step is the conversion of the kinetic energy into pressure energy by the spiral form of the pump body (shell + impeller).

The mechanical energy required to rotate the impeller is provided by the pulley via the bearing spindle. By reaction, the vanes of the impeller transfer a certain amount of motion to the fluid. The fluid is then thrown out by the impeller and collected by an arrangement called a volute. The junction between the volute and the cylinder block water inlet also affects the pump performance.

The role of the dynamic seal is to provide a seal between the ambient air under the bonnet and the cooling system during engine operation or when the engine is stopped.

To avoid damage in operation, there is a film of coolant between sealing ring and counterface. The purpose of this film is to provide lubrication and cooling of these two components. However, a very small amount of liquid can work its way to the outside of the pump. This liquid is discharged via the lower vent hole and is known as a "cosmetic leak". This leakage is normal and necessary for correct operation of the dynamic seal.

Water pump - Operating diagram

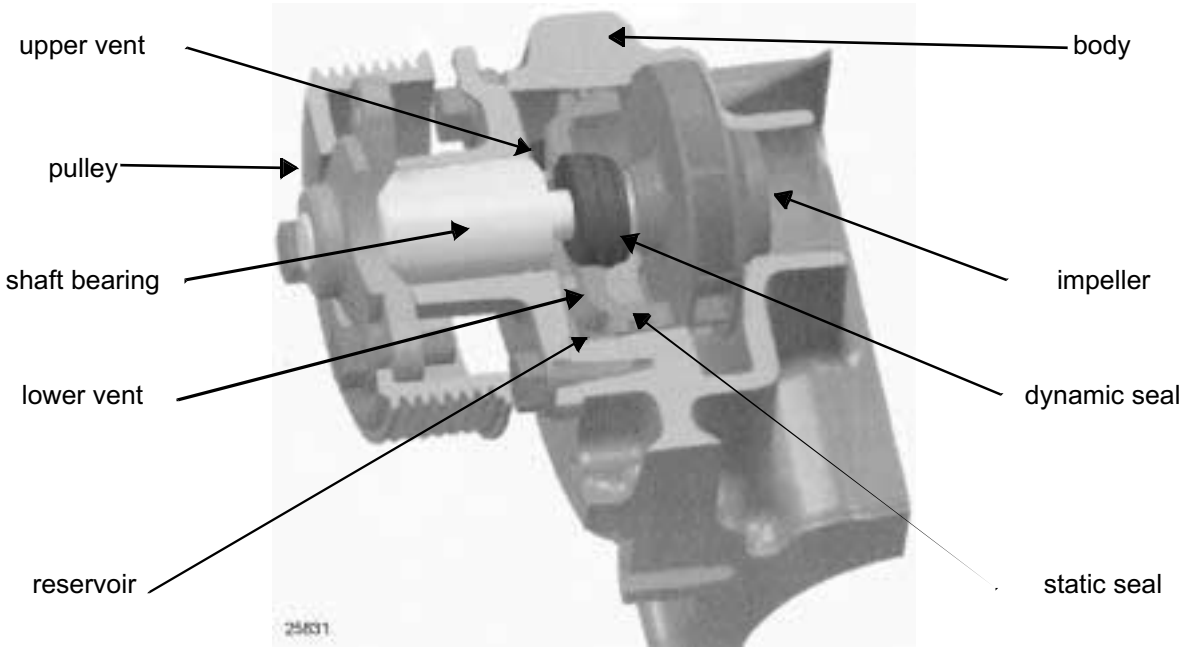

IMPORTANT
- Be aware of high temperatures when dealing with circuits that have been designed to be under pressure (risk of severe burns).
- Never remove the expansion bottle valve when the engine is hot.
- When working under the bonnet, be aware that the radiator ventilation fan(s) may operate unexpectedly.
- Do not undo the bleed screw(s) with the engine running.

Preliminary test:

When a vehicle displaying a fault arrives, before carrying out fault finding, check:

- the coolant fluid level in the tank (marked by a line) and colour,

- the condition and tension of the coolant pump drive belt,

- that the engine cooling fan, radiator and radiator grille are not blocked by any object that could disrupt air movement,

- that there is no signs of coolant leakage in the engine compartment.

Special tooling required	
Mot. 1700	Cooling circuit diagnostic and filling tool

Equipment required
Cylinder head testing tool

- **TRACES OF LIQUID**
  - ON THE GROUND — ALP 1
  - IN THE ENGINE COMPARTMENT — ALP 1
  - IN THE PASSENGER COMPARTMENT — ALP 2
- **SMOKE EMISSION**
  - FROM THE EXHAUST (WHITE SMOKE FROM WARM ENGINE) — ALP 3
  - IN THE ENGINE COMPARTMENT — ALP 1
  - IN THE PASSENGER COMPARTMENT — ALP 2
- **TEMPERATURE OR WARNING INDICATOR**
  - TEMPERATURE WARNING LIGHT:
    - WARNING LIGHT LIT WHEN DRIVING — ALP 4
    - THE WARNING LIGHT LIGHTS UP INTERMITTENTLY WHEN THE VEHICLE IS IN MOTION — ALP 5
  - WATER TEMPERATURE NEEDLE:
    - THE NEEDLE MOVES UP INTO THE RED AREA WHEN DRIVING — ALP 4
    - THE NEEDLE INDICATES OVERHEATING JUST AFTER STARTING OFF — ALP 5
    - THE NEEDLE POSITION FLUCTUATES WHEN DRIVING — ALP 5

OTHERS:

THERE IS A BUBBLING NOISE UNDER THE DASHBOARD	ALP 6
FLUID LEVEL IN THE TANK DECREASES	ALP 1
LIQUID IN THE TANK HAS CHANGED COLOUR	Technical Note 2675 A
THERE IS NO HEATING IN THE VEHICLE	ALP 7
HEAVY CONDENSATION ON THE WINDSCREEN (INTERIOR)	ALP 2
WATER PUMP CHECK	ALP 8

ALP 1	**– Traces of liquid on the ground** **– Traces of liquid in the engine compartment** **– Smoke emission in the engine compartment** **– Fluid level in the tank decreases**

NOTES	– Check that it is definitely coolant. – Ask the customer if they have topped up the coolant fluid level before contacting the RENAULT network.

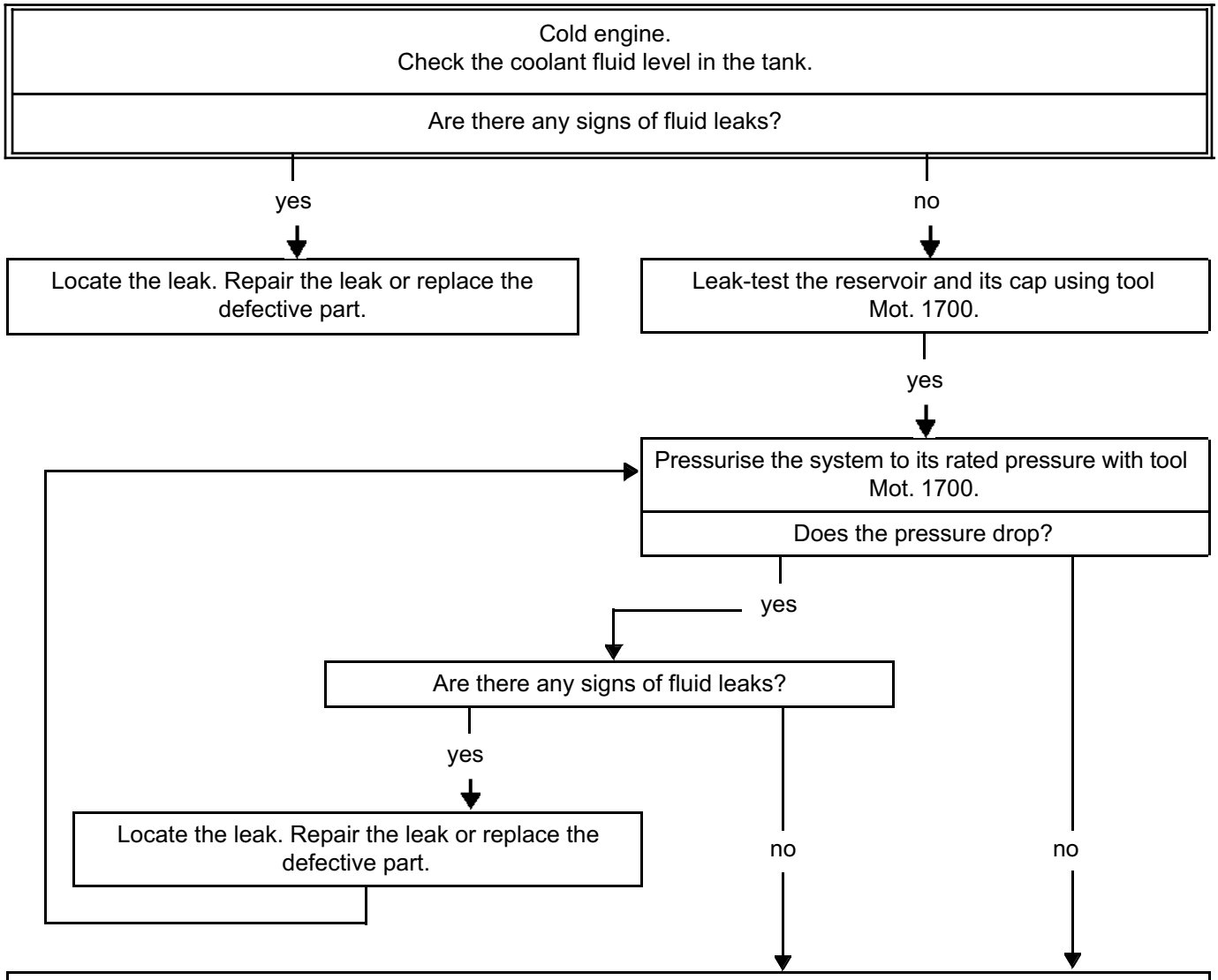

Smoke is most likely to be caused by the release of coolant. This can be the result of:
- a blocked fan unit:
  - run the fan unit command on vehicles fitted with centralised coolant temperature management,
  - if the vehicle is not fitted with centralised coolant temperature management, short circuit the temperature switch to force the fan unit to start.

  If the fan unit does not start, replace the fan unit motor.
- faulty temperature control. Apply the T2 test procedure.
- a faulty coolant pump. Check that it is operating correctly (ALP 8).

ALP 2	**– Traces of liquid in the passenger compartment** **– Smoke emission in the passenger compartment** **– Heavy condensation on the windscreen (interior)**

NOTES	– Check that it is definitely coolant. – Ask the customer if they have topped up the coolant fluid level before contacting the RENAULT network.

Check the coolant fluid level in the tank.
Check that the heating in the passenger compartment is not switched on. Run a warm engine at idle speed for **1 minute**.
Turn the heating on in the passenger compartment.

Is there an odour in the passenger compartment?

yes → Replace the heater matrix because it is leaking.

no → Check that the cooling system is not leaking in the engine compartment using tool Mot. 1700.

Are there any signs of fluid leaking in the engine compartment?

yes → Locate the leak. Repair the leak or replace the defective part.

no → Replace the heater matrix.

ALP 3	– Smoke emission from the exhaust (white smoke, warm engine)

NOTES	Ask the customer if they have topped up the coolant fluid level before contacting the RENAULT network.

Cold engine.
Check the coolant fluid level in the tank.
Pressurise the system to its rated pressure with tool Mot. 1700.

Does the pressure drop?

yes → The cooling circuit is not sealed. Look for a leak in the passenger compartment (ALP 2), or a leak in the engine compartment (ALP 1) or an internal engine leak (T1 test).

no → Start the engine.
Depress the accelerator pedal quickly a few times until the fan unit has started.
The warning light must remain off.

Does the fan unit start and the warning light remain off?

yes → Remove the cylinder head
Check the level of the cylinder head. Test the cylinder head.

Is the cylinder head sealed?

no → Replace the cylinder head.

yes → The smoke fault may be the result of an internal engine leak.

no → There is a temperature control fault.
Apply the T2 test procedure.

ALP 4	**– The warning light remains lit when driving** **– The needle moves up into the red area when driving**

NOTES	Ask the customer about the conditions when the fault appears.

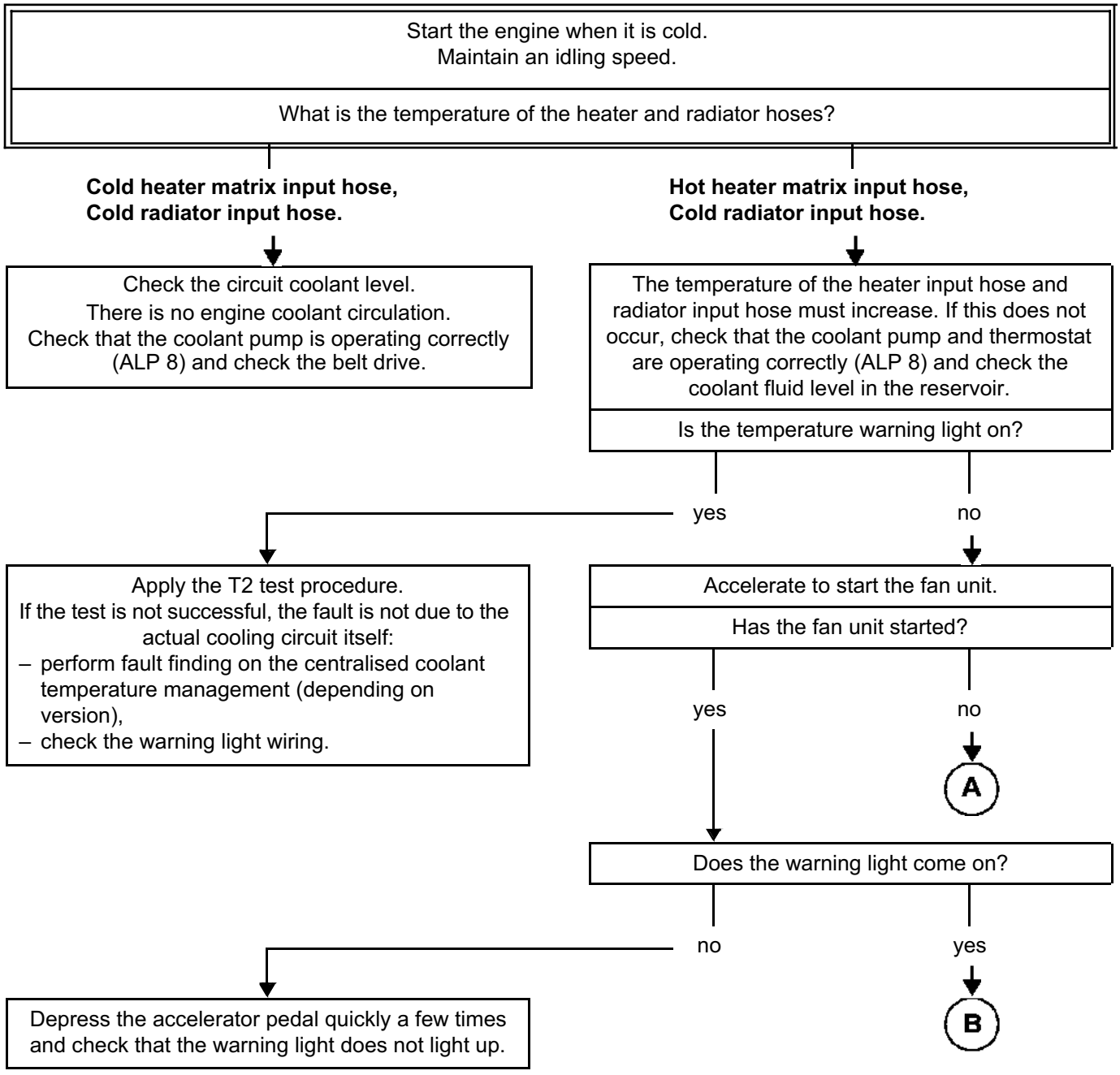

ALP 4 CONTINUED	

A

- For vehicles not fitted with centralised coolant temperature management:
  - Disconnect the temperature switch and short circuit it to activate the two fan unit speeds (high and low).
- For vehicles fitted with centralised coolant temperature management:
  - Run the command mode of the two speeds (high and low) of the fan unit using the diagnostic tool.

In both cases, the two speeds of the fan unit must be activated.
If this is does not occur:
- check the fan unit wiring if one of the two speeds is not obtained,
- replace the fan unit if it does not operate correctly.

↓

the fan unit operates normally.
- For vehicles not fitted with centralised coolant temperature management:
  - replace the temperature switch.
- For vehicles fitted with centralised coolant temperature management:
  - check the temperature sensor,
  - perform fault finding on the injection computer.

B

- For vehicles not fitted with centralised coolant temperature management:
  - Disconnect the temperature switch and short circuit it to trigger fan unit high-speed operation.
- For vehicles fitted with centralised coolant temperature management:
  - Activate the high-speed command mode using a diagnostic tool.

In both cases, the fan unit high-speed operation must be activated.
If this does not occur, check that the radiator, engine cooling fan and radiator grille are not blocked by an object which could disrupt air movement. Check the fan unit wiring.
If the wiring is correct, carry out a temperature control test.

↓

If the test is successful, the coolant temperature warning light fault is not due to the cooling system.
- Check the instrument panel wiring.
- Perform a centralised coolant temperature management test.

ALP 5	**– The warning light lights up intermittently when the vehicle is in motion** **– The needle indicates overheating just after starting** **– The needle position fluctuates when driving**

Carry out a preliminary check on the cooling system using tool Mot. 1700.

Is the cooling circuit functioning?

yes

The fault is not due to the cooling circuit.
Check by:
– running the coolant temperature warning light command (depending on version),
– carrying out fault finding on the instrument panel.

no

Replace the parts necessary for the circuit to function properly.

If the source of the fault is the water pump, follow the procedure on ALP 8.

ALP 6	There is a bubbling noise under the dashboard.

NOTES	Ask the customer if they have topped up the coolant fluid level before contacting the RENAULT network.

Cold engine.
Check the coolant fluid level.

Is the coolant fluid at maximum level?

- no → Add some coolant and bleed the circuit using Mot. 1700.
- yes → Bleed the coolant circuit using Mot. 1700.

Start the engine and depress the accelerator pedal quickly a few times.

Is there still a bubbling noise?

yes →

What has happened to the coolant fluid level?

- **It has risen** →
- **It has not moved** → C
- **It has dropped** → A

For vehicles fitted with a hot tank, fit a Ø **3** nozzle in the radiator tank output hose towards the expansion bottle (secure it near the output unit with a clip). If the fault is still present or for vehicles fitted with a cold tank, check the thermostat and replace the parts necessary for it to operate properly.

ALP 6 CONTINUED 1	

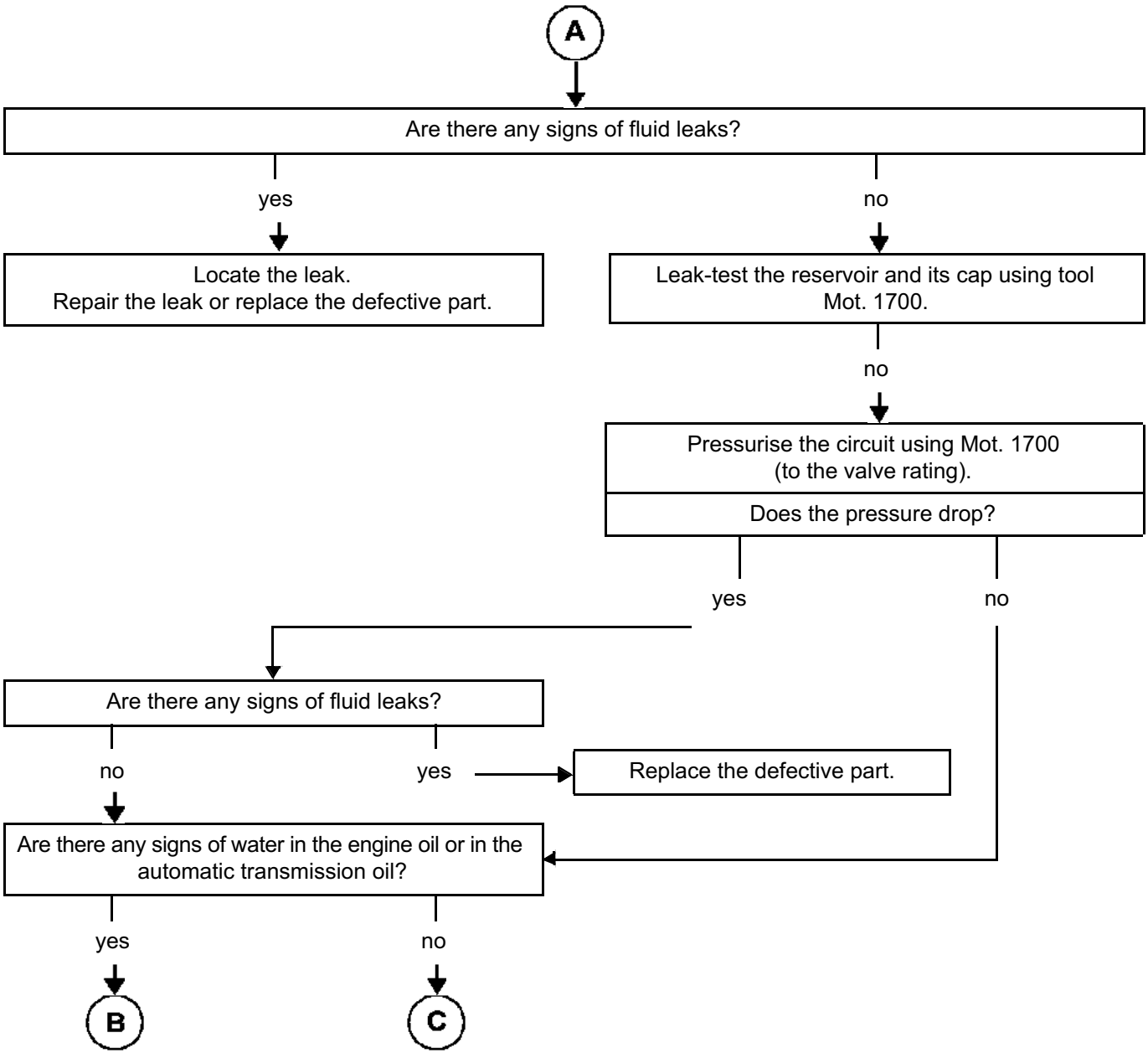

ALP 6 CONTINUED 2	

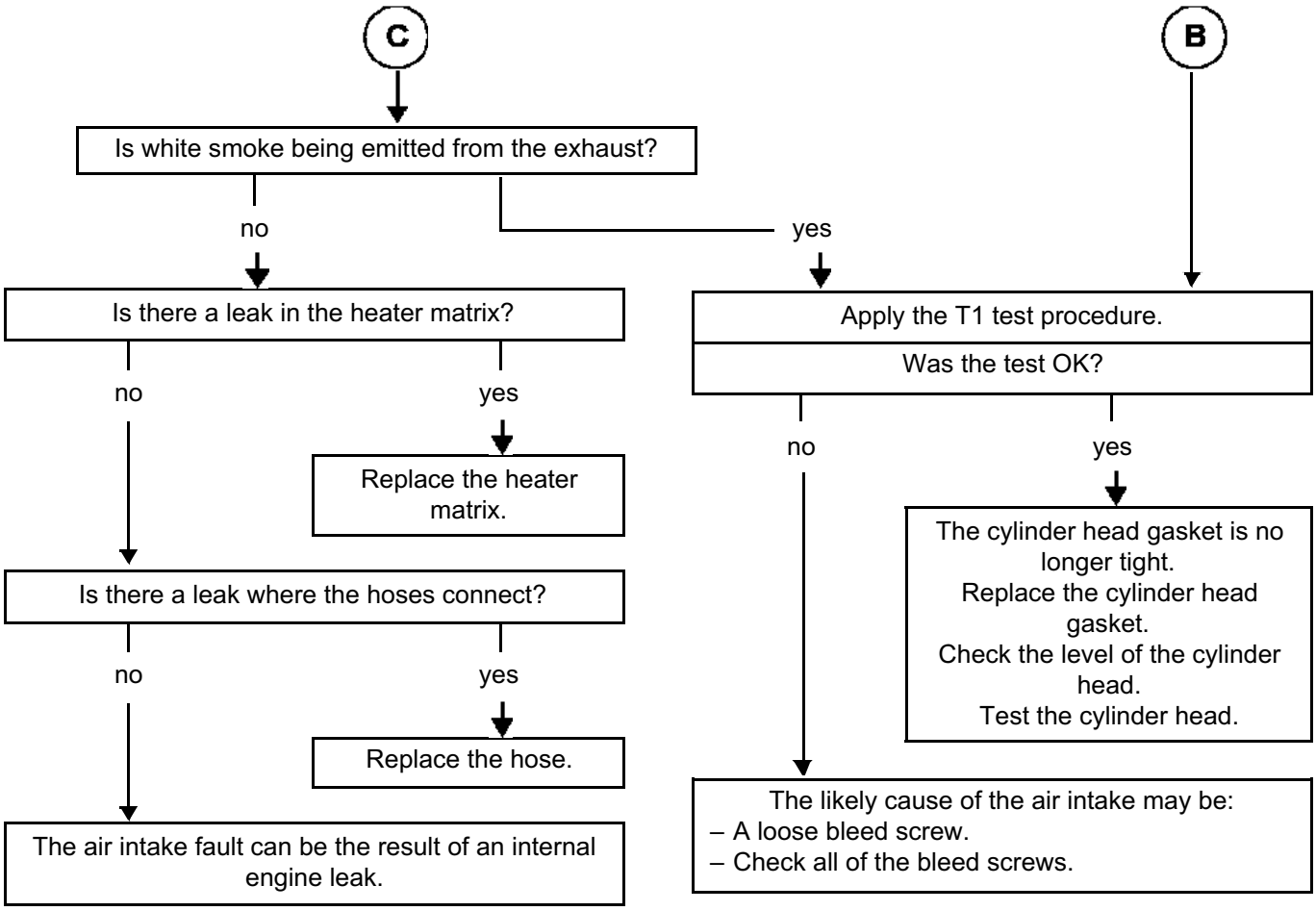

ALP 7	There is no heating in the vehicle

NOTES	Ask the customer if they have topped up the coolant fluid level before contacting the RENAULT network. Check the operation of the fan unit heating and air flow circuit.

Check the coolant fluid level in the tank.
Start the engine.

Is the coolant pump driven correctly by the engine?

yes →

Cold engine. Maintain an idling speed.

The heater matrix input hose must be hot and the radiator input hose must be cold. Is this correct?

yes →

Clean the cooling circuit and replace the coolant using Mot. 1700.

no →

The two hoses are hot: replace the thermostat.
The two hoses are cold: replace the coolant pump.

no →

Check the condition of the belt and replace it if necessary.
Check that the belt has the correct tension.

ALP 8	Water pump check

NOTES	● Never start the engine without the timing cover. ● Always disconnect tool Mot. 1700 before removing any cooling system component.

● When the engine is cold, top up the coolant in the expansion bottle to the maximum level.
● Carry out fault finding on the cooling system using tool Mot. 1700 (see Technical Note 3857A, page 19A-5).

Wait 3 minutes. Does the pressure in the cooling system drop?

- no → A
- yes → Carry out a visual inspection of the cylinder block below the water pump.

Are there signs of leakage, drips, seepage or beads of moisture?

- no → The fault is not caused by the water pump. Locate the leak (ALP 1). Repair the leak or replace the defective part.
- yes → If the water pump is driven by the timing belt, remove the timing cover.

Is the leak coming from the seal between the water pump and the cylinder block?

- no → The leak is coming from the water pump. Change the water pump.
- yes → Change the seal and repeat the test from the beginning.

ALP 8 CONTINUED	

A

- Disconnect tool Mot. 1700 and refit the cap on the expansion bottle.
- Start the engine and hold the engine speed at 2500 rpm.
- Accelerate several times with no load, every 2 or 3 minutes, until the fan switches on.
- Switch off the ignition.
  - If the water pump is driven by the timing belt, wait 15 minutes before removing the timing cover.
- Carry out a visual inspection of the water pump.

Is there leakage from the water pump, drips, seepage or beads of moisture?

yes → Change the water pump.

no → It is normal to find a build-up of crystalline material at the dynamic seal of the water pump.

Is there an abnormal amount* of play in the water pump pulley when you try to move it?

yes → Change the water pump.

no → The fault is not caused by the water pump. Locate the leak (ALP 1). Repair the leak or replace the defective part.

* *The repairer will be allowed to make his own judgement on this point*

TEST 1	Test to detect CO_2 in the cooling circuit

NOTES	Engine stopped for at least 5 hours.

Examine the radiator input hose.

Is the hose hard?

yes → This is an indication that CO_2 may be present. Replace the hose.

no → Take a sample of coolant and test it with a CO_2 liquid reagent.

Does the reagent change colour?

no → The test for the presence of CO_2 is negative. There is no internal engine leak.

yes → The test for the presence of CO_2 is positive. Exhaust gas is leaking into the cooling circuit.

TEST 2	Temperature control test

Cold engine. Start the engine.
Idling speed for **5 minutes**, with short bursts of acceleration.

What is the temperature of the heater hoses and radiator hoses?

Cold heater matrix input hose,
Cold radiator output hose.

There is no engine coolant circulation. Check that the coolant pump is operating correctly (ALP 8) and check the belt drive. Check the circuit coolant level.

Hot heater matrix input hose,
Cold radiator output hose.

A

Warm heater matrix input hose,
Warm radiator output hose.

The thermostat is not sealed. Replace the thermostat.

TEST 2 CONTINUED 1	

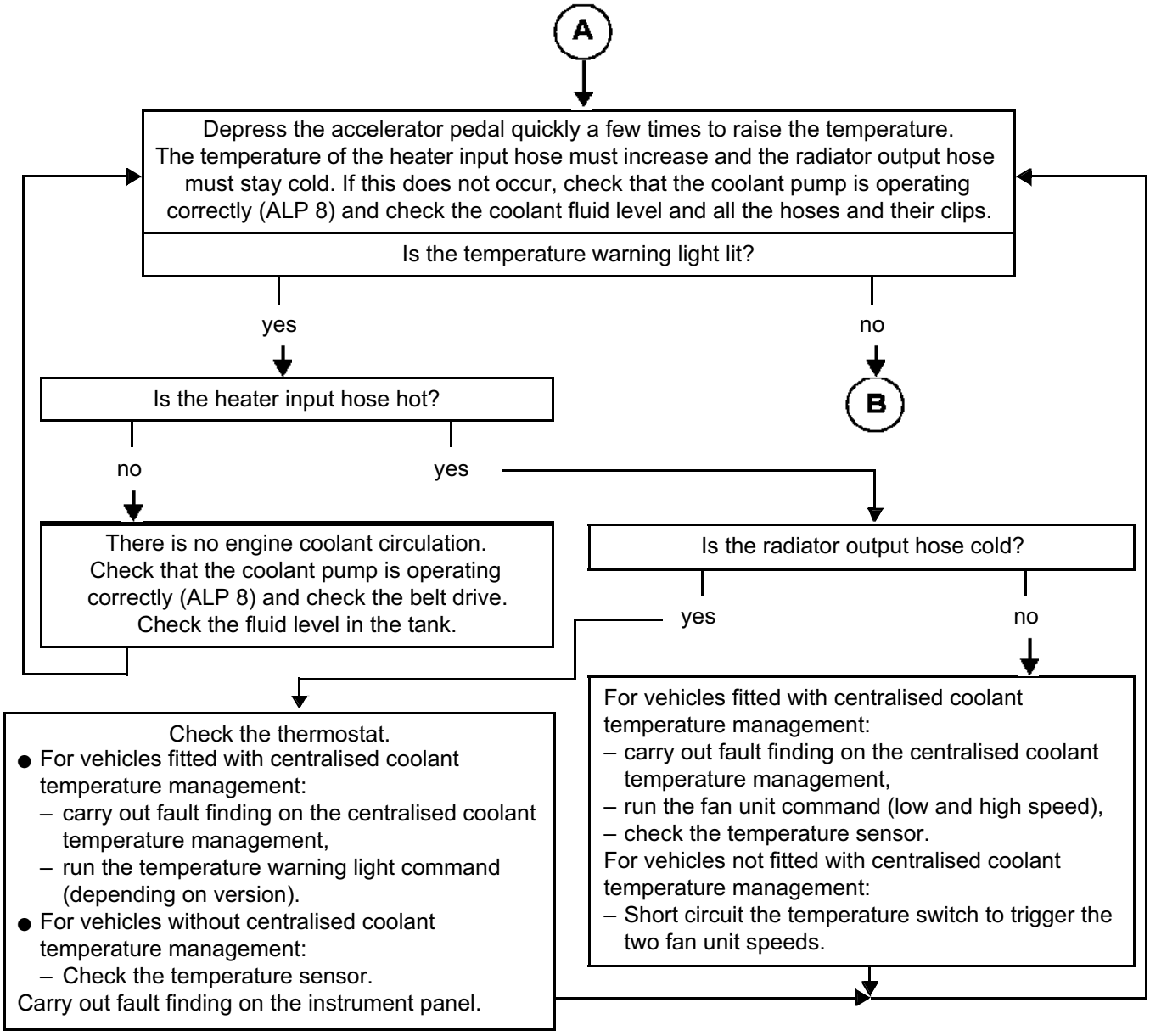

TEST 2 CONTINUED 2	

B

Depress the accelerator pedal quickly a few times until the fan unit has started.
The instrument panel indicator must remain off.

Has the fan unit started?

yes → The control test is correct.

no →

- For vehicles without centralised coolant temperature management:
  - Disconnect the temperature switch and short circuit it to activate the two fan unit speeds (high and low).
- For vehicles fitted with centralised coolant temperature management:
  - Run the command mode of the two speeds (high and low) of the fan unit using the diagnostic tool.

In both cases, the two speeds of the fan unit must be activated.
If this is does not occur:
- check the fan unit wiring if one of the two speeds is not obtained,
- replace the fan unit if it does not operate correctly.

S / Section

RENAULT ALL TYPES

All sections

Cancels and replaces N.T. 2856A of October 1997
Modifications: Information update

TRANSCODIFICATION OF TECHNICAL NOTES ISSUED SINCE THE BEGINNING OF 1994

Version **4** of the **"ITG CODE"** catalogue includes some codes which have been discontinued and which are present in version **3**.

To make it easy to to code the Technical Notes already issued, the table below shows a summary of NITG codes which have been discontinued and replaced.

For coding other incidents, please refer to :

- the new catalogue version **4** — **Part No. : 77 11 200 752**
- the new supplier catalogue **4/1** — **Part No. : 77 11 200 753**

NOTE : This transcodification is to be used from the start of May 1999.

"The repair methods given by the manufacturer in this document are based on the technical specifications current when it was prepared.

The methods may be modified as a result of changes by the manufacturer in the production of the various component units and accessories from which his vehicles are constructed".

All copyrights reserved by Renault.

Copying or translating, in part or in full, of this document or use of the service part reference numbering system is forbidden without the prior written authority of RENAULT.

© RENAULT 1999

TABLE OF NOTES CONCERNED

Note No.	NITG Code Old	NITG Code New	CF	RC
0205B	D111	**D151**	-	-
0245	5242	**K534**	-	-
0254	7625	**S221**	-	-
0255	5711	**G121**	-	-
0260	6700	**K000**	-	-
0266	5016	**K549**	-	-
0266B	6531	**K231**	-	-
0273	6471	**K34L**	-	-
0274	5014	**K53A**	085	-
0282	5242	**K534**	-	-
0283	5958	**H515**	-	-
0287	5123	**K547**	330	-
0296	6931	**H461**	129	-
0299	6452	**K3A3**	-	-
0304D	7542	**S118**	-	-
0312D	5222	**K523**	-	-
0313	K552	**K551**	050	2A
0313	8726	**K552**	050	2A
0321A	6600	**K000**	050	4A
0325A	K541	**K54P**	013	7K
0362A	5651	**A241**	244	5R
0365A	5650	**A241**	236	2J
0376A	5671	**K221**	325	-
0391A	5770	**G131**	005	7K
0399A	9386	**C222**	050	5L
0401A	5671	**K222**	220	4A
0404A	5672	**K222**	Y48	4A
0407A	5716	**G121**	050	5S
0422A	7525	**S111**	291	2D
0432A	5132	**K5A3**	050	2D
0437E	C213	**C222**	-	-
0443A	6710	**K33J**	050	2B
0445A	6514	**K331**	050	4A
0446A	6476	**K43P**	050	4A
0449A	1322	**R121**	050	5P
0451A	5242	**K534**	J28	7P
0452A	K332	**K331**	J28	4A
0452A	6321	**K331**	J29	4P
0458A	K558	**K55A**	013	7R
0458A	5045	**K551**	013	7R
0464A	5671	**K221**	220	4A
0465A	5240	**K53L**	D37	-
0469A	1220	**M411**	J28	5S
0472A	1220	**M411**	J28	5S
0478A	5672	**K221**	Y48	5P
0497A	K317	**K313**	050	7K

Note No.	NITG Code Old	NITG Code New	CF	RC
0497A	6663	**K33J**	050	7K
1724B	3120	**L435**	-	-
1763	2110	**B011**	-	-
1765A	1883	**M4BE**	001	-
1767	8430	**G221**	-	-
1770	2435	**B32B**	-	-
1771	2100	**B011**	-	-
1772	2212	**B331**	-	-
1774	3441	**L141**	-	-
1775	8238	**V138**	-	-
1783	1812	**M4B2**	-	-
1788	1244	**M411**	170	-
1788B	6168	**G330**	-	-
1789	2364	**B237**	-	-
1791	1792	**M51C**	-	-
1791B	1145	**M212**	-	-
1792	1530	**M431**	-	-
1793	1245	**M411**	-	-
1794	1250	**M411**	-	-
1795	1250	**M411**	-	-
1796	3151	**L43D**	-	-
1801	3241	**L155**	-	-
1803	1264	**M411**	-	-
1805	8384	**R142**	-	-
1807	1300	**M410**	-	-
1809	1340	**M731**	-	-
1810	1883	**M4BE**	-	-
1811	2171	**B112**	-	-
1812	3163	**L423**	-	-
1814E	3722	**G423**	-	-
1815	8676	**G2E1**	-	-
1816	2119	**B460**	-	-
1817	8676	**G2E1**	-	-
1820	1913	**M148**	-	-
1822	3721	**G422**	-	-
1823B	3720	**G422**	-	-
1827	3182	**L43F**	-	-
1835	1973	**F121**	-	-
1838	1920	**R220**	-	-
1844	3241	**L155**	-	-
1847	1473	**M4CA**	-	-
1848	1432	**M4E9**	050	-
1850	2825	**G43A**	-	-
1851	8965	**E2VK**	-	-
1854E	3430	**L42B**	-	-
1858	1245	**M411**	174	-

RC= Customer Complaint - CF = Supplier Code - SM = Depending on marking on component.

TABLE OF NOTES CONCERNED (continued)

Note No.	NITG Code Old	NITG Code New	CF	RC
1863	1880	M4BE	001	-
1871E	5450	V311	-	-
1872	1473	M4CA	-	-
1873	1232	M411	169	-
1877	3752	L132	040	-
1877E	2210	B330	-	-
1878	1800	M4B0	164	-
1880	2298	T162	-	-
1881	1880	M4BE	001	-
1882	1900	F13A	-	-
1883	1871	M4B5	001	-
1884	3722	G422	-	-
1885E	2470	B012	001	-
1887A	1881	M4BE	-	-
1891	1885	M4BE	001	-
1892	8960	E2V0	-	-
1898	2119	B460	-	-
1900	6101	G330	-	-
1902	8983	E2E2	-	-
1903B	2117	B458	-	-
1906	3762	L121	016	-
1907	8234	E344	047	-
1908	6400	K000	099	-
1910	8982	E2VP	-	-
1911	1140	M211	-	-
1915	2226	B21L	-	-
1916	8971	E321	-	-
1918	1531	M431	-	-
1919	1531	M431	-	-
1926	1883	M4BE	001	-
1927	2245	B33D	-	-
1930A	1880	M4BE	-	-
1936	1482	M511	258	-
1944	1132	M212	-	-
1946E	1940	R140	180	-
1947	3650	L212	-	-
1948	1031	M129	-	-
1949D	1671	M52A	099	-
1951	8751	H52E	099	-
1958	1535	M42R	-	-
1959	3681	L21F	446	-
1965	1858	M42N	037	-
1966	8677	G2E2	-	-
1968	8793	G2C9	387	-
1969	8760	G25E	-	-
1970	8384	R142	-	-

Note No.	NITG CODE Old	NITG CODE New	CF	RC
1980	8981	E2VP	-	-
1982	2226	B21L	-	-
1983	2226	B21L	-	-
1984	2333	B324	-	-
1986	6100	G31Y	-	-
1987	2344	B23E	001	-
1990	3720	G422	099	2C
1991	1630	E121	-	-
1993	2360	B210	-	-
1995	3732	G413	099	-
2001	1794	M51D	099	-
2003	3720	G422	099	2C
2004	3441	L141	016	-
2005	1481	M512	165	-
2006	3283	L117	016	-
2010	3720	G422	099	2C
2014	1800	M4B0	-	-
2015	1947	R124	-	-
2017	6443	K34C	-	-
2020	3241	L155	016	-
2021	3720	G422	099	2C
2023	2221	B21L	-	-
2031	2342	B23E	-	-
2032	1881	M4BE	001	-
2035	2325	B311	-	-
2036	1883	M4BE	001	-
2040	8793	G2C9	-	-
2041	8793	G2C9	276	7P
2046	1969	F139	099	-
2047E	1434	M4C1	153	-
2050E	3661	L218	353	-
2054	2119	L460	-	-
2054E	3661	L218	353	-
2055	1350	F130	106	-
2059	2342	B23E	-	-
2062D	5957	H514	292	-
2064	8374	G23D	020	2H
2064E	1434	M4C1	-	-
2065E	8374	G23D	020	2M
2073	E2AJ	E2VP	050	7C
2078	E253	E2V3	050	7S
2078	2340	B230	050	7S
2079	8758	H510	219	1C
2080	8758	H510	219	7T
2083A	8374	G23D	020	2H
2086	8758	H510	219	1C

RC= Customer Complaint - CF = Supplier Code - SM = Depending on marking on component.

TABLE OF NOTES CONCERNED (continued)

Note No.	New ITG code Old	New	CF	RC
2088	G231	**G233**	-	1A
2088	8321	**G233**	-	1A
2106	L433	**L430**	050	5N
2107	E22N	**E2V3**	-	7S
2108	E2AJ	**E2VP**	414	5P
2108	8999	**E2VP**	414	5P
2111	G34A	**G34A**	042	7P
2118	G426	**G424**	050	2H
2118	3728	**G424**	050	2H
2120	1975	**F121**	050	2C
2122	3441	**L141**	376	2B
2123	8374	**G23D**	020	2M
2137	1436	**M4C1**	099	9D
2139A	1423	**M4CR**	-	7M
2143	1100	**F133**	050	2A
2162A	3441	**L141**	376	2B
2162E	6234	**G341**	215	4A
2174A	M13Y	**M527**	020	1A
2174A	1756	**MAFA**	020	1A
2176A	B335	**B33C**	050	2F
2176A	2119	**B460**	050	2F
2203A	G344	**G34A**	189	2D
2204A	L173	**L171**	016	7R
2243A	F138	**F138**	026	5P
2271A	L215	**L21F**	-	-
2276A	M22T	**M22N**	164	2D
2278A	R112	**R121**	050	7B
2319A	R112	**R121**	050	7B
2344A	F137	**F138**	026	5P
2355A	E2DH	**E2VM**	SM	7P
2370A	B469	**B46M**	S	2B
2395A	E2FR	**E2V3**	050	1D
2426A	B233	**B221**	001	7P
2459A	E2AJ	**E2VP**	SM	7A
2461A	E22V	**E2V3**	050	7P
2502A	R122	**R121**	050	7E
2507E	R122	**R121**	050	7E
2508A	G2C9	**G233**	SM	6C
2539A	F122	**F121**	E44	2C
2558A	G417	**G412**	050	7J
2585A	M4C3	**M4FM**	SM	2J
2596A	8999	**E2VP**	050	7P

Note No.	Code ITG nouveau Old	New	CF	RC
2699A	8311	**G233**	020	1A
2789A	8331	**G233**	SM	1A
2867A	8211	**V111**	280	7M
2867E	3814	**G512**	050	7M
2875A	3441	**L141**	016	2A
2877A	3825	**G43A**	H13	2C
2879A	8000	**E2VP**	050	7E
2879A	8000	**E110**	050	7E
2892A	3663	**L21A**	050	2D
2899A	3731	**G412**	050	7R
2905A	8683	**G23T**	276	7S
2907A	1430	**M4C1**	153	88
2910E	1000	**M011**	050	2E
2912A	1830	**M4B0**	050	7E
2913A	8793	**G2C9**	020	1A
2919A	1300	**M410**	047	9C
2921A	1430	**M4C1**	153	8B
2925A	8363	**G23T**	M67	1A
2926A	8000	**E2V3**	050	1A
2926A	8000	**E110**	050	1A
2927A	8000	**E2V3**	050	1A
2927A	8000	**E110**	050	1A
2928A	1069	**M11F**	050	4E
2931A	1423	**M4CR**	050	7A
2935A	1300	**M410**	050	8B
2937A	3260	**L155**	A61	2D
2939A	3412	**L41C**	021	2D
2966A	3173	**L422**	050	5S
2969A	2163	**B211**	050	2E
2985A	3130	**L437**	050	2D
2999A	3441	**L141**	016	2A
3008A	1535	**M42R**	C74	7M
3011A	3260	**L155**	A61	2D
3018E	1000	**M4H0**	050	4A
3028E	3731	**G412**	050	7R
3037A	3682	**L212**	373	7K
3067A	1439	**M4C1**	037	8B
3105A	2865	**T141**	050	2B
3108A	1200	**M411**	050	7F
3110A	3441	**L141**	050	2C
3131A	3700	**G000**	050	7R
3183A	1032	**M224**	206	2B

RC= Customer Complaint - CF = Supplier Code - SM = Depending on marking on component.

RENAULT

N.T. 3416A

XXXX

FAULT FINDING
ABS - traction control
4x4

COMPUTER TYPE: 240.5

77 11 296 442 **MAY 2000** **EDITION ANGLAISE**

"The repair methods given by the manufacturer in this document are based on the technical specifications current when it was prepared.

The methods may be modified as a result of changes introduced by the manufacturer in the production of the various component units and accessories from which his vehicles are constructed".

All copyrights reserved by Renault.

Reproduction or translation, in part or in full, of this document or use of the service part reference numbering system is forbidden without the prior written authority of Renault.

© RENAULT 2000

Contents

Page

38 ELECTRONICALLY CONTROLLED HYDRAULIC SYSTEM

Introduction	38-1
Fault interpretation	38-2
Interpretation of states	38-31
Conformity check	38-33
Help	38-35
Customer complaints	38-37
Fault finding chart	38-38

This document introduces the fault finding strategy applicable on all the computers in the ABS/traction control of the Scénic 4x4 (computer identification: PR012 = 240.5).

The following are thus required to carry out fault finding on this system:

- **This "Special features of fault finding" Technical Note,**
- **the wiring diagram for the operation of the vehicle concerned,**
- **the tools listed under the heading "Special tooling required".**

GENERAL FAULT FINDING PROCEDURE:

- Use of one of the fault finding tools to identify the system fitted in the vehicle (reading the computer family, the program no., the vdiag, ...).
- Search for "fault finding" documents relating to the system identified.
- Consider the information supplied in the preliminary sections.
- Read the faults recorded in the computer memory and use the "fault interpretation" section of the documents.
  Reminder: Each fault is interpreted for a particular type of fault storage (fault present, fault stored, fault present or stored). The tests defined for dealing with each fault should therefore only be applied to the vehicle if the fault detected by the fault finding tool is interpreted in the document for its type of storage. The type of storage should be considered when the fault finding tool is used after the ignition has been switched off and on again.
  If a fault is interpreted when it is "stored", the conditions for application of the fault finding strategy are listed in the "Notes" box. If these conditions are not met, use the fault finding strategy to check the circuit of the faulty component because the fault is no longer present on the vehicle. Use the same procedure if a fault is shown as stored by the fault finding tool and is only interpreted in the documentation for a "present" fault.
- Carry out the conformity check (show possible malfunctions not yet detected by the system self diagnosis procedure) and apply the associated fault finding strategy according to the results.
- Validation of the repair (disappearance of the customer complaint).
- Use of the fault finding strategy for the "customer complaint" if the problem persists.

TOOLS REQUIRED FOR WORK ON THE ABS SYSTEM:

- Fault finding tools (except XR25).
- Multimeter.

Reminders
When an intermittent fault is stored, the ABS warning light will illuminate the next time the vehicle is used until the car reaches **7.5mph (12 km/h).** When the fault is stored, a counter linked to the fault is initialised with a value of **40**. This counter value will be decremented each time the ignition is switched on if the fault is not present when the vehicle speed exceeds **7.5 mph (12 km/h).**
When the counter value is equal to **1**, it is not decremented any further and the fault is not erased.

When the dialogue is established between the diagnostic tool and the ABS computer, the ABS and EBD (Electronic Brakeforce Distribution) functions are interrupted, which gives rise to a risk of loss of control of the vehicle under emergency braking. For this reason, the dialogue is cut as soon as the vehicle speed exceeds **6 mph (10 km/h)** to reestablish ABS and EBD function.

DF002 PRESENT or STORED	Front left solenoid inlet valve circuit

NOTES	**Conditions for the application of the fault finding strategy to the fault stored**: The fault is registered as present following: brake pedal held down + "solenoid valve front left wheel" actuator control

Check the condition and position of the **60A ABS fuse** in the engine connection unit. Ensure continuity between the fuse and **tracks 17 and 18** of the computer connector (presence of +before ignition on both tracks). Check that the battery terminals are securely connected and in good condition. Check the connections on the **31-track** computer **connector**. Check the **ABS earths** (above the ABS unit) and inspect visually all the ABS wiring.
Erase the computer memory, exit the fault finding procedure and switch off the ignition. Perform a new test with the fault finding tool using the "Front left wheel solenoid valves" actuator control. If the "Front left solenoid inlet valve circuit" fault reappears, replace the ABS computer (consult the "Help" section for this operation).

AFTER REPAIR	Clear the computer memory. Perform a road test then a new test with the fault finding tool.

DF003 PRESENT or STORED	Rear left solenoid inlet valve circuit

NOTES	**Conditions for the application of the fault finding strategy to the fault stored.**: The fault is registered as present following: brake pedal held down + "solenoid valve rear left wheel" actuator control

Check the condition and position of the **60A ABS fuse** in the engine connection unit. Ensure continuity between the fuse and **tracks 17 and 18** of the computer connector (presence of +before ignition on both tracks). Check that the battery terminals are securely connected and in good condition. Check the connections on the **31-way** computer **connector**. Check the **ABS earths** (above the ABS unit) and inspect visually all the ABS wiring.
Erase the computer memory, exit the fault finding procedure and switch off the ignition. Perform a new test with the fault finding tool using the "Rear left wheel solenoid valves" actuator control. If the "Rear left solenoid inlet valve circuit" fault reappears, replace the ABS computer (consult the "Help" section for this operation).

AFTER REPAIR	Clear the computer memory. Perform a road test then a new test with the fault finding tool.

DF004 PRESENT or STORED	Front left solenoid outlet valve circuit

NOTES	**Conditions for the application of the fault finding strategy to the fault stored.**: The fault is registered as present following: brake pedal held down + "solenoid valve front left wheel" actuator control

Check the condition and position of the **60A ABS fuse** in the engine connection unit.
Ensure continuity between the fuse and **tracks 17 and 18** of the computer connector (presence of +before ignition on both tracks).
Check that the battery terminals are securely connected and in good condition.
Check the connections on the **31-way** computer **connector**.
Check the **ABS earths** (above the ABS unit) and inspect visually all the ABS wiring.

Erase the computer memory, exit the fault finding procedure and switch off the ignition.
Perform a new test with the fault finding tool using the "Front left wheel solenoid valves" actuator control. If the "Front left solenoid outlet valve circuit" fault reappears, replace the ABS computer (consult the "Help" section for this operation).

AFTER REPAIR	Clear the computer memory. Perform a road test then a new test with the fault finding tool.

DF005 PRESENT or STORED	Rear left solenoid outlet valve circuit

NOTES	**Conditions for the application of the fault finding strategy to the fault stored.**: The fault is registered as present following: brake pedal held down + "solenoid valve rear left wheel" actuator control

Check the condition and position of the **60A ABS fuse** in the engine connection unit. Ensure continuity between the fuse and **tracks 17 and 18** of the computer connector (presence of +before ignition on both tracks). Check that the battery terminals are securely connected and in good condition. Check the connections on the **31-way** computer **connector**. Check the **ABS earths** (above the ABS unit) and inspect visually all the ABS wiring.
Erase the computer memory, exit the fault finding procedure and switch off the ignition. Perform a new test with the fault finding tool using the "Rear left wheel solenoid valves" actuator control. If the "Rear left solenoid outlet valve circuit" fault reappears, replace the ABS computer (consult the "Help" section for this operation).

AFTER REPAIR	Clear the computer memory. Perform a road test then a new test with the fault finding tool.

DF006 PRESENT	Front left wheel speed sensor circuit

NOTES	None

Check the connection and the condition of the sensor connectors.
If the connector is correct, check the resistance of the sensor at its connector. Replace the sensor if the resistance is not approximately **1.2 Kohms**.

If the resistance is correct, check and ensure continuity of the following connections:

sensor connector **one of the 2 tracks** → **track 7** computer connector
sensor connector **the other track** → **track 6** computer connector

Also check the insulation between these two connections.
Carry out a visual inspection of the sensor wiring and check the quality of the connection on the **31-track** computer **connector**.

If all the checks are correct, reconnect the computer and the wheel speed sensor and then erase the computer memory.
Exit the fault finding procedure and switch off the ignition.
Switch the ignition on and replace the sensor if the fault reappears.

AFTER REPAIR	Clear the computer memory. Perform a road test then a new test with the fault finding tool.

DF007 PRESENT	Rear left wheel speed sensor circuit

NOTES	None

Check the connection and the condition of the sensor connectors.
Check the connections at the intermediate connector under the body (R237).
If the connector is correct, check the resistance of the sensor at its connector. Replace the sensor if the resistance is not approximately **1.2 Kohms**.

If the resistance is correct, check and ensure continuity of the following connections:

sensor connector	**one of the 2 tracks**	→	**track 8**	computer connector
sensor connector	**the other track**	→	**track 9**	computer connector

Also check the insulation between these two connections.
Carry out a visual inspection of the sensor wiring and check the quality of the connection on the **31-track** computer **connector**.

If all the checks are correct, reconnect the computer and the wheel speed sensor and then erase the computer memory.
Exit the fault finding procedure and switch off the ignition.
Switch the ignition on and replace the sensor if the fault reappears.

AFTER REPAIR	Clear the computer memory. Perform a road test then a new test with the fault finding tool.

DF008 STORED	Front left wheel speed sensor signal

NOTES	**Priorities in dealing with a number of faults**: As a first priority, deal with the "DF006 Front left wheel speed sensor circuit" fault, if it is present.
	Conditions for the application of the fault finding strategy to the fault stored.: The fault is declared present during: road test (in excess of 60 mph (100 km/h)).

Check the quality of the mounting of the wheel speed sensor (position and tightening torque). Check the sensor / target air gap over one wheel revolution: **0.3 mm < air gap < 1.5 mm.** Check conformity of the target (condition, number of teeth = 44)
Check the connection and the condition of the sensor connectors. If the connector is correct, check the resistance of the sensor at its connector. Replace the sensor if the resistance is not approximately **1.2 Kohms**.
Carry out a visual inspection of the sensor wiring and check the quality of the connections on the 31-track computer connector.
If all the checks are correct, reconnect the computer and the wheel speed sensor and then erase the computer memory. Exit the fault finding procedure and carry out a road test. Change the sensor if the fault recurs.

AFTER REPAIR	Clear the computer memory. Perform a road test then a new test with the fault finding tool.

DF009 STORED	Rear left wheel speed sensor signal

NOTES	**Priorities in dealing with a number of faults**: As a first priority, deal with the "DF007 Rear left wheel speed sensor circuit" fault, if it is present.
	Conditions for the application of the fault finding strategy to the fault stored.: The fault is declared present during: road test (in excess of 60 mph (100 km/h)).

Check the quality of the mounting of the wheel speed sensor (position and tightening torque). Check the sensor / target air gap over one wheel revolution: **0.2 mm < air gap < 1.4 mm.** Check conformity of the target (condition, number of teeth=44)
Check the connection and the condition of the sensor connectors. If the connector is correct, check the resistance of the sensor at its connector. Replace the sensor if the resistance is not approximately **1.2 Kohms**.
Carry out a visual inspection of the sensor wiring and check the quality of the connection on the 31-track computer connector. Check the connections at the intermediate connector under the body (R237).
If all the checks are correct, reconnect the computer and the wheel speed sensor and then erase the computer memory. Exit the fault finding procedure and carry out a road test. Change the sensor if the fault recurs.

AFTER REPAIR	Clear the computer memory. Perform a road test then a new test with the fault finding tool.

DF010 PRESENT or STORED	Pump motor circuit 1.DEF: Pump motor not turning 2.DEF: Permanent control of the pump motor or open circuit

NOTES	**Conditions for the application of the fault finding strategy to the fault stored.**: The fault is registered as present following: brake pedal held down + "Test pump motor" actuator control

1.DEF	***NOTES***	None.

Replace the hydraulic assembly (mechanical locking of the pump, ...).

2.DEF	***NOTES***	Replace the computer if the pump motor operates continuously.

Check the **ABS earths** (tightening of the two earth bolts above the hydraulic assembly). Check / ensure continuity between the **ABS earth** and **track 16** of the computer connector.
Check the locking and the condition of the pump motor 2-way connector and the connection between the computer and the motor. If the connector is good, check the resistance of the motor coil. Change the hydraulic unit if the resistance is not approximately **0.4 / 0.5 ohm**.
If all checks are correct, reconnect the computer and erase the memory. Exit the fault finding procedure and carry out a road test. Change the computer if the fault recurs.

AFTER REPAIR	Clear the computer memory. Perform a road test then a new test with the fault finding tool.

DF011 PRESENT	Solenoid valve supply

NOTES	None

Carry out operations necessary to obtain correct voltage between **tracks 19 and 17/18** of the 31-track ABS computer connector (9.5 volts < correct voltage < 17.5 volts):
– Check that the battery terminals are securely connected and in good condition.
– Check the **60A fuse** in the engine connection unit.
– Ensure continuity between the **60A fuse** and **tracks 17 and 18** of the computer connector.
– Check the **ABS earths** (tightening of the two earth bolts above the hydraulic assembly).
– Check and ensure continuity between the **ABS earth** and **track 19** of the computer connector.

If all checks are correct, reconnect the computer and erase the memory.
Exit the fault finding procedure and carry out a road test. Change the computer if the fault recurs.

AFTER REPAIR	Clear the computer memory. Perform a road test then a new test with the fault finding tool.

DF013 STORED	Target on one of the wheels

NOTES	**Conditions for the application of the fault finding strategy to the fault stored.**: The fault is declared present following: road test (dialogue must only be established between the tool and the ABS computer when the vehicle is stopped and before the ignition is switched off)

Check the quality of wheel speed sensor mountings (position and that they are tightened to the recommended torque).
Check the conformity of the targets: condition, **number of teeth = 44**.

Check the connection and the condition of the connectors on each sensor.
Check the connections for the rear sensors at the intermediate connector under the body (R237).
Carry out a visual inspection of the sensor wiring and check the quality of the connection on the 31-track computer connector.

Check the sensor/target air gap over one revolution of each of the wheels:
– Front wheels : **0.3 mm < air gap < 1.5 mm**
– Rear wheels : **0.2 mm < air gap < 1.4 mm**

If all the checks are correct, reconnect the computer and the sensors then erase the computer fault memory.
Exit the fault finding procedure and carry out a road test.
If the fault recurs it may be caused by a solenoid valve operating fault. It is therefore necessary to carry out the hydraulic check of the solenoid valves using the fault finding tool (consult the "Help" chapter).
If the **ten unlocking / locking cycles** do not take place on one of the wheels, replace the hydraulic assembly.
If the hydraulic unit is not faulty, change the computer.

AFTER REPAIR	Clear the computer memory. Perform a road test then a new test with the fault finding tool.

DF017 PRESENT	Computer

NOTES	None

Check the condition and position of the **60A ABS fuse** in the engine connection unit. Ensure continuity between the fuse and **tracks 17 and 18** of the computer connector (presence of +before ignition on both tracks). Check that the battery terminals are securely connected and in good condition. Check the connections on the **31-track connector** of the ABS computer. Check the **ABS earths** (above the ABS unit) and inspect visually all the ABS wiring.
Erase the computer memory, exit the fault finding procedure and switch off the ignition. Carry out a new check using the fault finding tool. If the fault persists, change the ABS computer.

AFTER REPAIR	Clear the computer memory. Perform a road test then a new test with the fault finding tool.

DF020 PRESENT	Tachymetric index programming

NOTES	None

The Bosch 5.3 ABS computer with the "tachymetry button" supplies the vehicle speed signal to all the users of this information in the vehicle (instrument panel, engine management, ...).
This vehicle speed signal replaces that supplied by the speed sensor located on the gearbox.
The ABS computer calculates the vehicle speed from the speed of the wheels and the circumference of the tyres fitted on the vehicle.

The tyre circumference must be programmed into the memory of a new computer. This consists of entering an index "X" through the fault finding tool using the "TACHYMETRIC INDEX" command.

Value of index "**X**":

All tyre types	**X = 136**

Once the index has been entered using the **"tachymetric index"** command, erase the computer memory and then switch off the ignition. Use the **PR030 "Tachymetric index"** parameter to check that the index has been entered correctly.

AFTER REPAIR	Clear the computer memory. Perform a road test then a new test with the fault finding tool.

DF021 PRESENT or STORED	Battery voltage

NOTES	**Special note**: Apply the fault finding strategy below whether the fault is indicated as present or stored.

Carry out the operations necessary to obtain the correct + after ignition voltage supply to the computer:

9.5 volts < correct voltage < 17.5 volts

– Battery charge check.
– Charging circuit check.
– Check that the battery terminals are securely connected and in good condition.

Check the presence of +after ignition on track 15 of the computer connector (5A fuse).

AFTER REPAIR	Clear the computer memory. Perform a road test then a new test with the fault finding tool.

DF022 PRESENT or STORED	Front right solenoid inlet valve circuit

NOTES	**Conditions for the application of the fault finding strategy to the fault stored.**: The fault is registered as present following: brake pedal held down + "solenoid valve front right wheel" actuator control

Check the condition and position of the **60A ABS fuse** in the engine connection unit. Ensure continuity between the fuse and **tracks 17 and 18** of the computer connector (presence of +before ignition on both tracks). Check that the battery terminals are securely connected and in good condition. Check the connections on the **31-way** computer **connector.** Check the **ABS earths** (above the ABS unit) and inspect visually all the ABS wiring.
Erase the computer memory, exit the fault finding procedure and switch off the ignition. Perform a new test with the fault finding tool using the "Front right wheel solenoid valves" actuator control. If the "Front right solenoid inlet valve circuit" fault reappears, replace the ABS computer (consult the "Help" section for this operation).

AFTER REPAIR	Clear the computer memory. Perform a road test then a new test with the fault finding tool.

DF023 PRESENT or STORED	Rear right solenoid inlet valve circuit

NOTES	**Conditions for the application of the fault finding strategy to the fault stored.**: The fault is registered as present following: brake pedal held down + "solenoid valve rear right wheel" actuator control

Check the condition and position of the **60A ABS fuse** in the engine connection unit. Ensure continuity between the fuse and **tracks 17 and 18** of the computer connector (presence of +before ignition on both tracks). Check that the battery terminals are securely connected and in good condition. Check the connections on the **31-way** computer **connector**. Check the **ABS earths** (above the ABS unit) and inspect visually all the ABS wiring.
Erase the computer memory, exit the fault finding procedure and switch off the ignition. Perform a new test with the fault finding tool using the "Rear right wheel solenoid valves" actuator control. If the "Rear right solenoid inlet valve circuit" fault reappears, replace the ABS computer (consult the "Help" section for this operation).

AFTER REPAIR	Clear the computer memory. Perform a road test then a new test with the fault finding tool.

DF024 PRESENT or STORED	Front right solenoid outlet valve circuit

NOTES	**Conditions for the application of the fault finding strategy to the fault stored.**: The fault is registered as present following: brake pedal held down + "solenoid valve front right wheel" actuator control

Check the condition and position of the **60A ABS fuse** in the engine connection unit. Ensure continuity between the fuse and **tracks 17 and 18** of the computer connector (presence of +before ignition on both tracks). Check that the battery terminals are securely connected and in good condition. Check the connections on the **31-way** computer **connector**. Check the **ABS earths** (above the ABS unit) and inspect visually all the ABS wiring.
Erase the computer memory, exit the fault finding procedure and switch off the ignition. Perform a new test with the fault finding tool using the "Front right wheel solenoid valves" actuator control. If the "Front right solenoid outlet valve circuit" fault reappears, replace the ABS computer (consult the "Help" section for this operation).

AFTER REPAIR	Clear the computer memory. Perform a road test then a new test with the fault finding tool.

DF025 PRESENT or STORED	Rear right solenoid outlet valve circuit

NOTES	**Conditions for the application of the fault finding strategy to the fault stored.**: The fault is registered as present following: brake pedal held down + "solenoid valve rear right wheel" actuator control

Check the condition and position of the **60A ABS fuse** in the engine connection unit.
Ensure continuity between the fuse and **tracks 17 and 18** of the computer connector (presence of +before ignition on both tracks).
Check that the battery terminals are securely connected and in good condition.
Check the connections on the **31-way** computer **connector**.
Check the **ABS earths** (above the ABS unit) and inspect visually all the ABS wiring.

Erase the computer memory, exit the fault finding procedure and switch off the ignition.
Perform a new test with the fault finding tool using the "Rear right wheel solenoid valves" actuator control. If the "Rear right solenoid outlet valve circuit" fault reappears, replace the ABS computer (consult the "Help" section for this operation).

AFTER REPAIR	Clear the computer memory. Perform a road test then a new test with the fault finding tool.

DF026 PRESENT	Front right wheel speed sensor circuit

NOTES	None

Check the connection and the condition of the sensor connectors.
If the connector is correct, check the resistance of the sensor at its connector. Replace the sensor if the resistance is not approximately **1.2 Kohms**.

If the resistance is correct, check and ensure continuity of the following connections:

sensor connector **one of the 2 tracks** → **track 4** computer connector
sensor connector **the other track** → **track 5** computer connector

Also check the insulation between these two connections.
Carry out a visual inspection of the sensor wiring and check the quality of the connection on the **31-track** computer **connector**.

If all the checks are correct, reconnect the computer and the wheel speed sensor and then erase the computer memory.
Exit the fault finding procedure and switch off the ignition.
Switch the ignition on and replace the sensor if the fault reappears.

AFTER REPAIR	Clear the computer memory. Perform a road test then a new test with the fault finding tool.

DF027 PRESENT	Rear right wheel speed sensor circuit

NOTES	None

Check the connection and the condition of the sensor connectors.
Check the connections at the intermediate connector under the body (R237).
If the connector is correct, check the resistance of the sensor at its connector. Replace the sensor if the resistance is not approximately **1.2 Kohms**.

If the resistance is correct, check and ensure continuity of the following connections:

sensor connector **one of the 2 tracks** → **track 1** computer connector
sensor connector **the other track** → **track 2** computer connector

Also check the insulation between these two connections.
Carry out a visual inspection of the sensor wiring and check the quality of the connection on the **31-track** computer **connector**.

If all the checks are correct, reconnect the computer and the wheel speed sensor and then erase the computer memory.
Exit the fault finding procedure and switch off the ignition.
Switch the ignition on and replace the sensor if the fault reappears.

AFTER REPAIR	Clear the computer memory. Perform a road test then a new test with the fault finding tool.

DF028 STORED	Front right wheel speed sensor signal

NOTES	**Priorities in dealing with a number of faults**: As a first priority, deal with the "DF026 Front right wheel speed sensor circuit" fault, if it is present.
	Conditions for the application of the fault finding strategy to the fault stored.: The fault is declared present during: road test (in excess of 60 mph (100 km/h)).

Check the quality of the mounting of the wheel speed sensor (position and tightening torque). Check the sensor / target air gap over one wheel revolution: **0.3 mm < air gap < 1.5 mm.** Check conformity of the target (condition, number of teeth = 44)
Check the connection and the condition of the sensor connectors. If the connector is correct, check the resistance of the sensor at its connector. Replace the sensor if the resistance is not approximately **1.2 Kohms**.
Carry out a visual inspection of the sensor wiring and check the quality of the connections on the 31-track computer connector.
If all the checks are correct, reconnect the computer and the wheel speed sensor and then erase the computer memory. Exit the fault finding procedure and carry out a road test. Change the sensor if the fault recurs.

AFTER REPAIR	Clear the computer memory. Perform a road test then a new test with the fault finding tool.

DF029 STORED	Rear right wheel speed sensor signal

NOTES	**Priorities in dealing with a number of faults**: As a first priority, deal with the "DF026 Front right wheel speed sensor circuit" fault, if it is present.
	Conditions for the application of the fault finding strategy to the fault stored.: The fault is declared present during: road test (in excess of 60 mph (100 km/h)).

Check the quality of the mounting of the wheel speed sensor (position and tightening torque). Check the sensor / target air gap over one wheel revolution: **0.2 mm < air gap < 1.4 mm.** Check conformity of the target (condition, number of teeth = 44)
Check the connection and the condition of the sensor connectors. If the connector is correct, check the resistance of the sensor at its connector. Replace the sensor if the resistance is not approximately **1.2 Kohms**.
Carry out a visual inspection of the sensor wiring and check the quality of the connection on the 31-track computer connector. Check the connections at the intermediate connector under the body (R237).
If all the checks are correct, reconnect the computer and the wheel speed sensor and then erase the computer memory. Exit the fault finding procedure and carry out a road test. Change the sensor if the fault recurs.

AFTER REPAIR	Clear the computer memory. Perform a road test then a new test with the fault finding tool.

DF030 PRESENT	Longitudinal acceleration sensor circuit

NOTES	None

Check the quality of the mounting of the longitudinal acceleration sensor (position and tightness).
Check the connection and the condition of the sensor connectors.

Check and ensure continuity and the insulation of the following connections:

computer connector	**track 1**	→	**track 28**	computer connector
sensor connector	**track 2**	→	**track 10**	computer connector
sensor connector	**track 3**	→	**track 27**	computer connector

Also check the insulation between these connections.
Check the connections on the **31-way** computer **connector**.

If these checks are correct, reconnect the computer and switch on the ignition. Measure the supply voltage to the acceleration sensor across **tracks 1 and 3** of the connector Replace the computer if the voltage is not approximately **5 volts**.

If all the checks are correct, reconnect the computer and the longitudinal acceleration sensor and then erase the computer memory.
Exit the fault finding procedure and switch off the ignition.
Switch the ignition on and replace the sensor if the fault reappears.

AFTER REPAIR	Clear the computer memory. Perform a road test then a new test with the fault finding tool.

DF034 PRESENT	Injection ⟷ ABS connection (CAN connection) 1.DEF: CAN connection fault 2.DEF: Absence of engine management signal

NOTES	None

Check and ensure continuity and the insulation of the following connections:

F9Q – ABS computer connector **track 30** → **Track A1** connector B of the engine management computer
– ABS computer connector **track 29** → **Track B1** connector B of the engine management computer

F4R – ABS computer connector **track 30** → **Track 27** engine management computer connector
– ABS computer connector **track 29** → **Track 57** engine management computer connector

Also check the insulation between these connections.
Check the connections on the connectors of each computer.

AFTER REPAIR	Clear the computer memory. Perform a road test then a new test with the fault finding tool.

DF042 PRESENT or STORED	Front left traction control solenoid valve switching circuit

NOTES	**Conditions for the application of the fault finding strategy to the fault stored.**: The fault is registered as present following: brake pedal held down + "Actuator static test" actuator control

Check the condition and position of the **60A ABS fuse** in the engine connection unit. Ensure continuity between the fuse and **tracks 17 and 18** of the computer connector (presence of +before ignition on both tracks). Check that the battery terminals are securely connected and in good condition. Check the connections on the **31-track connector** of the ABS computer. Check the **ABS earths** (above the ABS unit) and inspect visually all the ABS wiring.
Erase the computer memory, exit the fault finding procedure and switch off the ignition. Perform a new test with the fault finding tool using the "Actuator static test" actuator control. If the "Solenoid valve circuit" fault reappears, replace the ABS computer (consult the "Help" section for this operation).

AFTER REPAIR	Clear the computer memory. Perform a road test then a new test with the fault finding tool.

DF043 PRESENT or STORED	Front right traction control solenoid valve switching circuit

NOTES	**Conditions for the application of the fault finding strategy to the fault stored.**: The fault is registered as present following: brake pedal held down + "Actuator static test" actuator control

Check the condition and position of the **60A ABS fuse** in the engine connection unit. Ensure continuity between the fuse and **tracks 17 and 18** of the computer connector (presence of +before ignition on both tracks). Check that the battery terminals are securely connected and in good condition. Check the connections on the **31-track connector** of the ABS computer. Check the **ABS earths** (above the ABS unit) and inspect visually all the ABS wiring.
Erase the computer memory, exit the fault finding procedure and switch off the ignition. Perform a new test with the fault finding tool using the "Actuator static test" actuator control. If the "Solenoid valve circuit" fault reappears, replace the ABS computer (consult the "Help" section for this operation).

AFTER REPAIR	Clear the computer memory. Perform a road test then a new test with the fault finding tool.

DF044 PRESENT or STORED	Front left traction control solenoid valve circuit

NOTES	**Conditions for the application of the fault finding strategy to the fault stored.**: The fault is registered as present following: brake pedal held down + "Actuator static test" actuator control

Check the condition and position of the **60A ABS fuse** in the engine connection unit. Ensure continuity between the fuse and **tracks 17 and 18** of the computer connector (presence of +before ignition on both tracks). Check that the battery terminals are securely connected and in good condition. Check the connections on the **31-track connector** of the ABS computer. Check the **ABS earths** (above the ABS unit) and inspect visually all the ABS wiring.
Erase the computer memory, exit the fault finding procedure and switch off the ignition. Perform a new test with the fault finding tool using the "Actuator static test" actuator control. If the "Solenoid valve circuit" fault reappears, replace the ABS computer (consult the "Help" section for this operation).

AFTER REPAIR	Clear the computer memory. Perform a road test then a new test with the fault finding tool.

DF045 PRESENT or STORED	Front right traction control solenoid valve circuit

NOTES	**Conditions for the application of the fault finding strategy to the fault stored.**: The fault is registered as present following: brake pedal held down + "Actuator static test" actuator control

Check the condition and position of the **60A ABS fuse** in the engine connection unit. Ensure continuity between the fuse and **tracks 17 and 18** of the computer connector (presence of +before ignition on both tracks). Check that the battery terminals are securely connected and in good condition. Check the connections on the **31-track connector** of the ABS computer. Check the **ABS earths** (above the ABS unit) and inspect visually all the ABS wiring.
Erase the computer memory, exit the fault finding procedure and switch off the ignition. Perform a new test with the fault finding tool using the "Actuator static test" actuator control. If the "Solenoid valve circuit" fault reappears, replace the ABS computer (consult the "Help" section for this operation).

AFTER REPAIR	Clear the computer memory. Perform a road test then a new test with the fault finding tool.

DF046 PRESENT	Brake switch and lights circuit

NOTES	None

Depress the brake pedal observing the **ET006 BRAKE SWITCH** state.

Are the "pedal released" and "pedal depressed" positions registered?

YES	Check the two brake light bulbs and the earth of the rear light units (no earthing of **track 14** across the bulbs when pedal is not depressed).
NO	Apply the fault finding strategy described in the interpretation of the **ET006 BRAKE SWITCH** state.

AFTER REPAIR	Clear the computer memory. Perform a road test then a new test with the fault finding tool.

ABSABD64 1.0

ET006	Brake switch

NOTES	Only carry out the checks if the "active" and "non-active" states of the brake switch are not consistent with the position of the pedal.

Brake switch "non-active" brake pedal depressed

If brake lights are operating:
– Test the operation of the brake switch's closed contact between **tracks 1 and 3**.
Replace the switch if necessary.
– Ensure continuity between **track 3** of the brake switch connector and **track 14** of the ABS computer connector.

If brake lights are not operating:
– Check condition and adjustment of brake light switch as well as the **15A fuse** for the brake lights (in the passenger compartment connection unit). Replace if necessary.
– Disconnect the brake switch, then check and ensure the presence of **+ after ignition on track 1** of the connector (continuity between this track 1 and the 15A fuse for the brake lights).

Brake switch "active" brake pedal not depressed

– Check the condition and the setting of the brake switch. Replace if necessary.
– Check the operation of the brake switch's contact (closed contact between tracks 1 and 3).
Replace the brake switch if there is permanent continuity between these two tracks when the pedal is not depressed.
– Check and ensure insulation against **12 volts** of the connection between **track 3** of the brake switch connector and **track 14** of the ABS computer connector.

AFTER REPAIR	Perform a road test then a new test with the fault finding tool.

ET007	Clutch switch

NOTES	Only carry out the checks if the "active" and "non-active" states of the clutch switch are not consistent with the position of the pedal.

Clutch switch "non-active" clutch pedal depressed

- Check the condition and the setting of the clutch switch.
- Check the operation of the clutch switch's contact (open contact between tracks **1 and 3**).
  Replace the clutch switch if necessary.
- Ensure insulation against earth of the connection between **track 1** of the clutch switch connector and **track 31** of the computer connector.

Clutch switch "active" clutch pedal not depressed

- Check the condition and the setting of the clutch switch.
- Check the operation of the clutch switch's contact (open contact between tracks **1 and 3**).
  Replace the clutch switch if there is not permanent continuity between these two tracks when the pedal is not depressed.
- Disconnect the clutch switch and then check and ensure the presence of **earth on track 3** of the connector.
- Check and ensure insulation between **track 1** of the clutch switch connector and **track 31** of the computer connector.

AFTER REPAIR	Perform a road test then a new test with the fault finding tool.

NOTES	Only check the conformity after a full check using the fault finding tool.

Order	Function	Parameter / state checked or action	Display / notes	Diag
1	Fault finding tool dialogue		**ABS J64 4X4**	**CHART 1**
2	Computer Conformity	**PR012** COMPUTER NUMBER	**240.5**	None.
3	Computer configuration	**PR030** TACHYMETRIC INDEX	Ensure that the index entered corresponds to the tyres fitted to the vehicle (refer to the "Help" section)	None.
4	Warning light operation Computer initialisation check.	Switch on the ignition	Three second illumination of the warning lights when ignition is switched on (consult fault finding if it remains illuminated or if it does not illuminate)	None.
5	Detection that brake pedal is not depressed	**ET006** BRAKE SWITCH	"Active" state not confirmed when brake pedal is not depressed	**ET006**
6	Acknowledgement that brake pedal is pressed	**ET006** BRAKE SWITCH	"Active" state confirmed when brake pedal is depressed	**ET006**
7	Detection that clutch is not depressed	**ET007** CLUTCH SWITCH	"Active" state not confirmed when clutch pedal is not depressed	**ET007**

NOTES	Only check the conformity after a full check using the fault finding tool.

Order	Function	Parameter / state checked or action	Display / notes	Diag
8	Detection that clutch is depressed	**ET007** CLUTCH SWITCH	"Active" state confirmed when clutch pedal is depressed	**ET007**
9	Longitudinal acceleration sensor operation	**PR007** LONGITUDINAL ACCELERATION	Value equal to **2.5 volts** with zero acceleration	**DF030**

USE OF COMMAND MODES:

Control of the wheel solenoid valves in order to check the hydraulic system:

Lift the vehicle in order to be able to turn the wheels and check that they turn freely.
Keep the brake pedal depressed to prevent the wheel from being turned by hand (do not brake so firmly that full brake power is reached).

Select and validate the control of the wheel being examined ("Front left wheel solenoid valves", ...)

→ There should be ten unlocking / locking cycles on the wheel concerned.

Pump motor operation:

Keep the brake pedal depressed and check the "Pump motor test" control.

→ Pump operation for 2 seconds should be detected.

Pump motor and solenoid valve control: (This test permits a re-run of the actuator test carried out when the ignition was switched on.)

Keep the brake pedal depressed and check the "Actuator static test" control.

→ Brief motor and solenoid valve operation must be noted.

Bleeding the hydraulic circuits:

Apply the procedure described in the "Bleeding the circuits" section of the "Repair method" Technical Note.

REPLACING THE COMPUTER:

The Bosch 5.3 ABS computer with the "tachymetry button" supplies the vehicle speed signal to all the users of this information in the vehicle (instrument panel, engine management, ...).
This vehicle speed signal replaces that supplied by the speed sensor located on the gearbox.
The ABS computer calculates the vehicle speed from the speed of the wheels and the circumference of the tyres fitted on the vehicle.

The tyre circumference must be programmed into the memory of a new computer. This consists of entering an index "X" through the fault finding tool using the "TACHYMETRIC INDEX" command.

Value of index "**X**":

All tyre types	**X = 136**

Once the index has been entered using the **tachymetric index** command, erase the computer memory and then switch off the ignition. Use the **PR030 Tachymetric index** parameter to check that the index has been entered correctly.

NOTES	Only consult the customer complaints after a complete check using the fault finding tool

FAULTS DETECTED IN WARNING LIGHT FUNCTION

ABS warning light does not illuminate for 3 seconds after ignition switched on	Chart 2
Permanent illumination of the ABS warning light, ignition on (no fault)	Chart 3
Re-illumination of the ABS and/or brake warning light after the engine is started	Chart 4
Temporary illumination of the ABS and/or brake warning light when driving	Chart 4
The brake warning light does not illuminate for 1 second when the ignition is switched on	Chart 5
Permanent illumination of the brake warning light, ignition on	Chart 6
Permanent illumination of the ABS and brake warning lights, ignition on	Chart 7

FAULTS DETECTED UNDER BRAKING WITH ABS REGULATION

Locking of one or more wheels	Chart 8
Pulling	Chart 9
Slewing	Chart 10
Unexpected ABS operation at low speed and with slight pedal pressure	Chart 11
Unexpected ABS operation on a poor road	Chart 12
Unexpected ABS operation with use of special equipment (carphone, CB...)	Chart 13
Lengthening of the brake pedal travel following a regulation phase (with a pedal receding when entering the regulation phase)	Chart 14
Spongy pedal	Chart 15
Brake pedal vibration	Chart 16
Noise from the pump, the pipes or the hydraulic unit	Chart 17

OTHER CASES

No communication with the ABS computer	Chart 1

Chart 1	NO DIALOGUE WITH THE ABS COMPUTER

NOTES	None.

Ensure that the fault finding tool is not the cause of the fault by trying to communicate with a computer on another vehicle. If the tool is not the cause of the fault and dialogue cannot be established with any other computer on the same vehicle, it may be that a faulty computer is disrupting fault finding lines **K** and **L**.
Disconnect the connections one at a time to locate the fault.
Check the battery voltage and carry out the necessary operations to obtain a correct voltage (**9.5 volts < battery voltage > 17.5 volts**).

Check the presence and the condition of the ABS fuse on the passenger compartment fuse board (5 A).
Check the computer connector connection and its condition.
Check the ABS earths (tighten the two earth screws above the ABS assembly).
Check that the computer is correctly supplied:
– **Earth on track 19** of the 31-track connector.
– **+ after ignition on track 15** of the 31-track connector.

Check that the fault finding socket is being supplied correctly:
– **before ignition on track 16.**
– **Earth on track 5.**
Check and ensure continuity and the insulation of the connections between:

computer connector	**track 12**	→	**track 15**	fault finding socket
computer connector	**track 11**	→	**track 7**	fault finding socket

If dialogue is still not established following these various checks, change the ABS computer.

AFTER REPAIR	Perform a road test then check with the fault finding tool.

Chart 2	**ABS warning light does not illuminate for 3 seconds after ignition is switched on.**

NOTES	Only consult this customer complaint after a complete check using the fault finding tool.

Check the **15A fuse** for the instrument panel on the passenger compartment fuse board (if the problem is common to all the instrument panel functions).

Switch off the ignition.
Disconnect the computer, then switch on the ignition again.
Does the ABS warning light illuminate?

yes → Test the connections on the computer connector.
Replace the computer if the fault persists.

no →

Check the condition of the ABS warning light bulb and its supply.
Check the insulation against earth of the connection between **track 20** of the computer connector and the ABS warning light. If the fault persists, check the operation of the instrument panel.

AFTER REPAIR	Perform a road test then check with the fault finding tool.

Chart 3	**Permanent illumination of the ABS warning light with the ignition on (with no fault being indicated by the fault finding tool).**

NOTES	Only consult this customer complaint after a complete check using the fault finding tool. The ABS and brake warning lights illuminate by the loss of earth on the connections.

Disconnect the **R36 / R255** front end of engine / ABS connection. Connect **track 10** on the instrument panel side to earth and then switch on the ignition.
Is the ABS warning light extinguished?

yes →

Test the connections on the computer connector and the R36 / R255.
Ensure continuity of the connection between **track 20** of the ABS computer connector and the **R36 / R255** on **track 10**

no ↓

Ensure continuity of the connection between the instrument panel and **track 10** of the **R36 / R255**. Check the connections on the instrument panel connector.
If the fault persists, check the operation of the instrument panel.

AFTER REPAIR	Perform a road test then check with the fault finding tool.

Chart 4	**Re-illumination of the ABS and/or brake warning light after the engine is started** **Temporary illumination of the ABS and/or brake warning light when driving**

NOTES	Only consult this customer complaint after a complete check using the fault finding tool.

Check the voltage of the computer power supply: **9.5 volts < correct voltage < 17.5 volts.**
If necessary, carry out the following operations:
– Check the battery charge check (check the charging circuit if necessary).
– Check that the battery terminals are securely connected and in good condition.
– Check the ABS earths (tightening of the two earth bolts above the ABS assembly).

Ensure continuity of the connections between:

ABS computer connector **track 20** → ABS warning light
ABS computer connector **track 21** → brake warning light

Test the connections on these 2 connections.

AFTER REPAIR	Perform a road test then check with the fault finding tool.

Chart 5	**ABS warning light does not illuminate for 3 seconds after ignition is switched on.**

NOTES	Only consult this customer complaint after a complete check using the fault finding tool.

Check the **15A fuse** for the instrument panel on the passenger compartment fuse board (if the problem is common to all the instrument panel functions).

Switch off the ignition.
Disconnect the computer, then switch on the ignition again.
Does the brake warning light illuminate?

yes → Test the connections on the computer connector.
Replace the computer if the fault persists.

no ↓

Check the condition of the brake warning light bulb and its supply.
Check the insulation against earth of the connection between **track 21** of the computer connector and the brake warning light.
If the fault persists, check the operation of the instrument panel.

AFTER REPAIR	Perform a road test then check with the fault finding tool.

Chart 6	**Permanent illumination of the brake warning light, ignition on**

NOTES	Only consult this customer complaint after a complete check using the fault finding tool. The ABS and brake warning lights illuminate by the loss of earth on the connections.

As this warning light is multifunctional,
– check the position of the handbrake and the circuit for its switch,
– check the brake fluid level in the reservoir,
– check the level of wear on the brake pads.

Disconnect the **R36 / R255** front end of engine / ABS connection.
Connect **track 14** on the instrument panel side to earth and then switch on the ignition.
Is the brake warning light extinguished?

yes →

Test the connections on the computer connector and the R36 / R255.
Ensure the continuity of the connection between **track 21** of the ABS computer connector and the **R36 / R255** on **track 14**.

no ↓

Ensure continuity of the connection between the instrument panel and **track 14** of the **R36 / R255**.
Check the connections on the instrument panel connector.
If the fault persists, check the operation of the instrument panel.

AFTER REPAIR	Perform a road test then check with the fault finding tool.

Chart 7	**Permanent illumination of the ABS and brake warning lights, ignition on**

NOTES	Only consult this customer complaint after a complete check using the fault finding tool. The ABS and brake warning lights illuminate by the loss of earth on the connections.

Check the **5A ABS fuse** on the passenger compartment fuse board.
Check the ABS earths (tightening of the two earth bolts above the hydraulic assembly).
Check that the computer and the intermediate connectors are correctly connected (also check the condition of the connections).
Check that the computer is correctly supplied:
– Check the presence of **+after ignition** on **track 15** of the computer connector.
– Ensure continuity with **earth** of **tracks 16 and 19** of the computer connector.

If the problem persists, consult **chart 3** and **chart 6**.

AFTER REPAIR	Perform a road test then check with the fault finding tool.

Chart 8	Locking of one or more wheels

NOTES	Only consult this customer complaint after a complete check using the fault finding tool.

Reminder: The locking of wheels on a vehicle fitted with ABS or grating of the tyres, which feels like locking to the customer, may be linked to normal operation of the system and should not always be considered a fault:
- Locking is allowed below 3.75 mph **(6 km/h)** (the system will not provide regulation).
- Braking with ABS regulation on very poor roads (significant grating).
- .....

However, if the wheels are actually locking, hoist the vehicle in order to be able to turn the wheels and check:
- For possible reversal of the connection of the speed sensors.
  Use parameters **PR001, PR002, PR003** and **PR004** turning the associated wheels and check the consistency of the results obtained.
  If the value measured is zero, turn the other wheels to confirm an electrical reversal of the sensors and repair the wiring.
- For possible reversal of the pipes at the hydraulic unit.
  Use the "Front left wheel solenoid valves", "Front right wheel solenoid valves", "Rear left wheel solenoid valves" and "Rear right wheel solenoid valves" commands while depressing the brake pedal and check for the occurrence of ten unlocking / locking cycle on the wheel concerned (see the "Help" section). If the 10 cycles are not carried out on the wheel tested (wheel remains locked), check whether they are carried out on another wheel (confirmation of a reversal: repair).
  If the 10 cycles are not carried out on a wheel without reversal of the pipes, change the hydraulic unit.

Check the condition of the ABS targets and that they are correct to specification (condition and 44 teeth).
Also check the sensor / target air gap by rotating each wheel.

0.3 mm < air gap on one revolution of a front wheel < 1.5 mm
0.2 mm < air gap on one revolution of a rear wheel < 1.4 mm

If the fault persists following these checks, change the hydraulic unit.

AFTER REPAIR	Perform a road test then check with the fault finding tool.

Chart 9	Pulling

NOTES	Only consult this customer complaint after a complete check using the fault finding tool.

Disconnect one wheel speed sensor.
Start the engine and ensure that only the ABS fault warning light is illuminated. Do not drive the vehicle if the brake fault warning light is also illuminated, as the brake compensator function is no longer assured.
Carry out a road test with the ABS thus out of service.
Does the fault persist under these conditions?

yes →

If the brake pedal travel is relatively long, bleed the brake circuit.
If the travel is normal, check the tyre pressures, the front axle, or the presence of any leaks in the circuit.

no ↓

Hoist the vehicle to allow the wheels to be turned and check:
– For possible reversal of the connection of the speed sensors.
– For possible reversal of the pipes at the hydraulic unit.
For these two tests, refer to and apply the procedures defined in **Chart 8**.
Check the condition of the ABS targets and that they conform. Also check the sensor / target air gap by rotating each front and rear wheel one revolution.
If the fault persists, change the hydraulic unit.

AFTER REPAIR	Perform a road test then check with the fault finding tool.

Chart 10	Slewing

NOTES	Only consult this customer complaint after a complete check using the fault finding tool.

Disconnect one wheel speed sensor. Start the engine and ensure that only the ABS fault warning light is illuminated. Do not drive the vehicle if the brake fault warning light is also illuminated, as the brake compensator function is no longer assured. Carry out a road test with the ABS thus out of service.
Does the fault persist under these conditions?

yes → Road handling fault not connected with the ABS.
Check the condition of the brake linings and that they are to specification and check the tyre pressures, the front axle...

no → Normal behaviour linked to the operation of the system during the regulation phase in particular on surfaces with uneven grip or which are poorly coated.

AFTER REPAIR	Perform a road test then check with the fault finding tool.

Chart 11	**Unexpected ABS operation at low speeds and when little pressure applied to brake pedal**

NOTES	Only consult this customer complaint after a complete check using the fault finding tool.

Brake pedal vibrations may be felt which are connected to the reactions of the system in particular situations:
– crossing rumble strips,
– tight cornering with lifting of the inside rear wheel.
These vibrations may be associated with the simple activation of the brake compensator when pressure on the rear axle is limited.

If the problem is different, check the speed sensors connectors (micro-breaks) as well as the air gaps.

AFTER REPAIR	Perform a road test then check with the fault finding tool.

Chart 12	**Unexpected ABS operation on a poor road**

NOTES	Only consult this customer complaint after a complete check using the fault finding tool.

On poor road surfaces it is normal to feel hesitation and vibrations of the pedal as well grating which is more significant than on good surfaces.
The result is the impression of a variation in efficiency which should be considered normal.

AFTER REPAIR	Perform a road test then check with the fault finding tool.

Chart 13	**Unexpected ABS operation with use of special equipment (carphone, CB...)**

NOTES	Only consult this customer complaint after a complete check using the fault finding tool.

Check that the equipment which is causing the problem when it is used is approved.
Check that the equipment has been correctly installed without modification to the original wiring in particular that of the ABS (unauthorised connections to earth and +after ignition/before ignition of the ABS).

AFTER REPAIR	Perform a road test then check with the fault finding tool.

Chart 14	**Lengthening of the brake pedal travel following a regulation phase (with a pedal receding when entering the regulation phase)**

NOTES	Only consult this customer complaint after a complete check using the fault finding tool.

Passage of air from the hydraulic unit regulation channels to the brake circuits.
Bleed the circuits in accordance with the procedure recommended in the Workshop Repair Manual (use the control modes on the fault finding tool).
Following the operation, carry out a road test with ABS regulation.

If the fault persists, carry out the above operation again once or twice.
If the customer complaint is particularly pronounced and bleeding the circuit does not improve matters, change the hydraulic unit.

AFTER REPAIR	Perform a road test then check with the fault finding tool.

Chart 15	Spongy pedal

NOTES	Only consult this customer complaint after a complete check using the fault finding tool.

Presence of air in the brake circuits.
Bleed the circuits in the conventional way starting with the rear right brake, then rear left , front left and finally front right.
Repeat the operation if necessary.

AFTER REPAIR	Perform a road test then check with the fault finding tool.

Chart 16	**Brake pedal vibration**

NOTES	Only consult this customer complaint after a complete check using the fault finding tool.

Normal reaction of the brake pedal during an ABS regulation phase or of limitation of pressure on the rear axle (brake compensator function).

AFTER REPAIR	Perform a road test then check with the fault finding tool.

Chart 17	**Noise from the pump, the pipes or the hydraulic unit**

NOTES	Only consult this customer complaint after a complete check using the fault finding tool.

– Vibration of the unit: check the presence and the condition of the group bracket insulating silentbloc fittings.
– Vibration of pipes: check that all pipes are well clipped into their retaining clips and that there is no contact between pipes or between pipes and bodywork.

The "Front left wheel solenoid valves", "Front right wheel solenoid valves", "Rear left wheel solenoid valves" and "Rear right wheel solenoid valves" solenoid valve control commands may be used while depressing the brake pedal to determine where the noise is coming from.

AFTER REPAIR	Perform a road test then check with the fault finding tool.

RENAULT

TECHNICAL NOTE 3419A

XXXX

DIESEL INJECTION TURBOCHARGER FAULT FINDING ASSISTANCE

This Technical Note deals with all turbocharged diesel injection engines

77 11 295 742 **APRIL 2000** **EDITION ANGLAISE**

"The repair methods given by the manufacturer in this document are based on the technical specifications current when it was prepared.

The methods may be modified as a result of changes introduced by the manufacturer in the production of the various component units and accessories from which his vehicles are constructed."

All copyrights reserved by Renault.

Reproduction or translation, in part or in full, of this document or use of the service part reference numbering system is forbidden without the prior written authority of Renault.

© RENAULT 2000

NOTES

Carry out a conformity check on the injection system, engine management system and engine using the fault finding tool (see relevant fault finding sheets).

NOTE: the turbocharger is very rarely the source of a lack of engine performance.

The engine lacks power despite normal consumption and exhaust emissions (turbo)

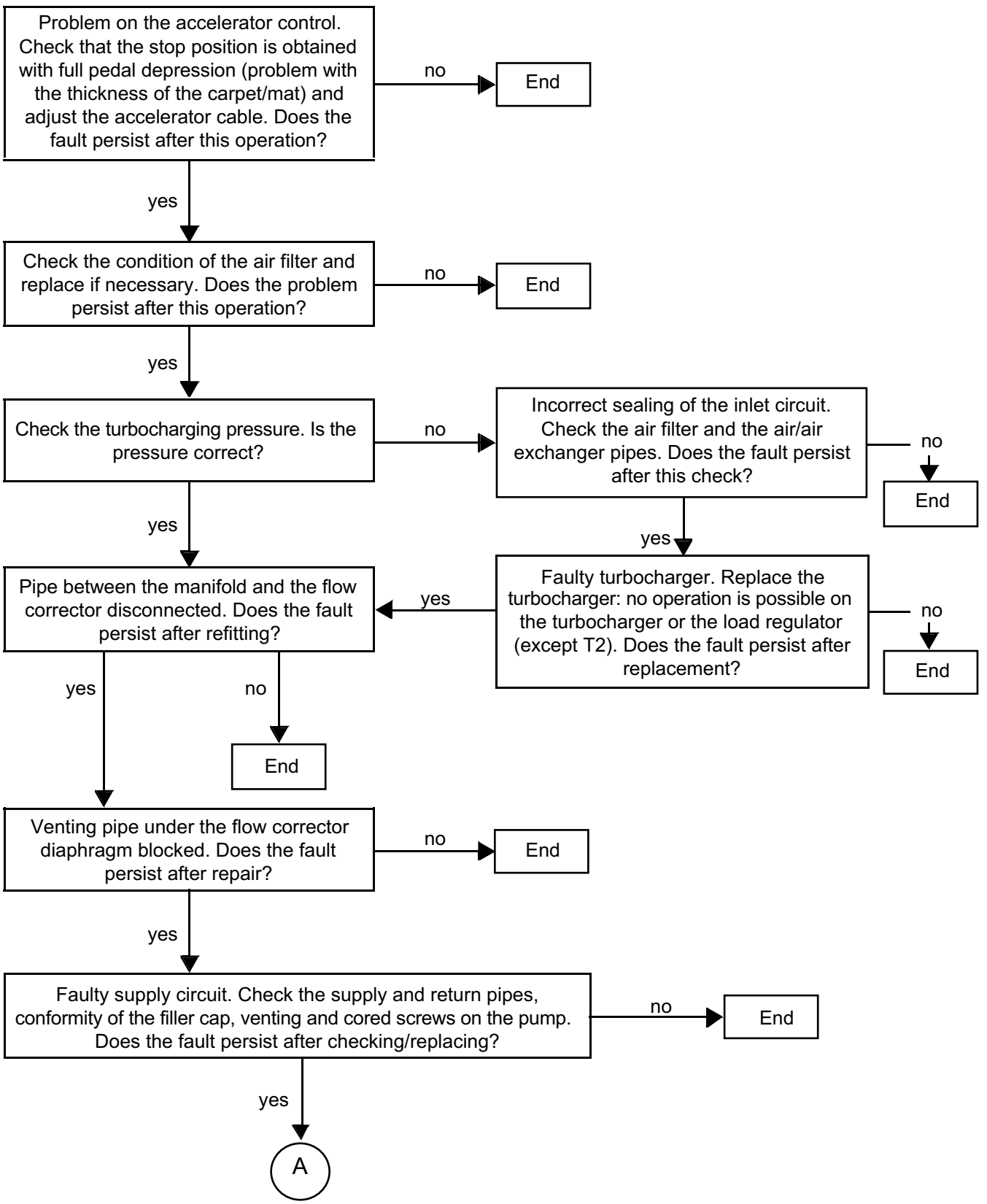

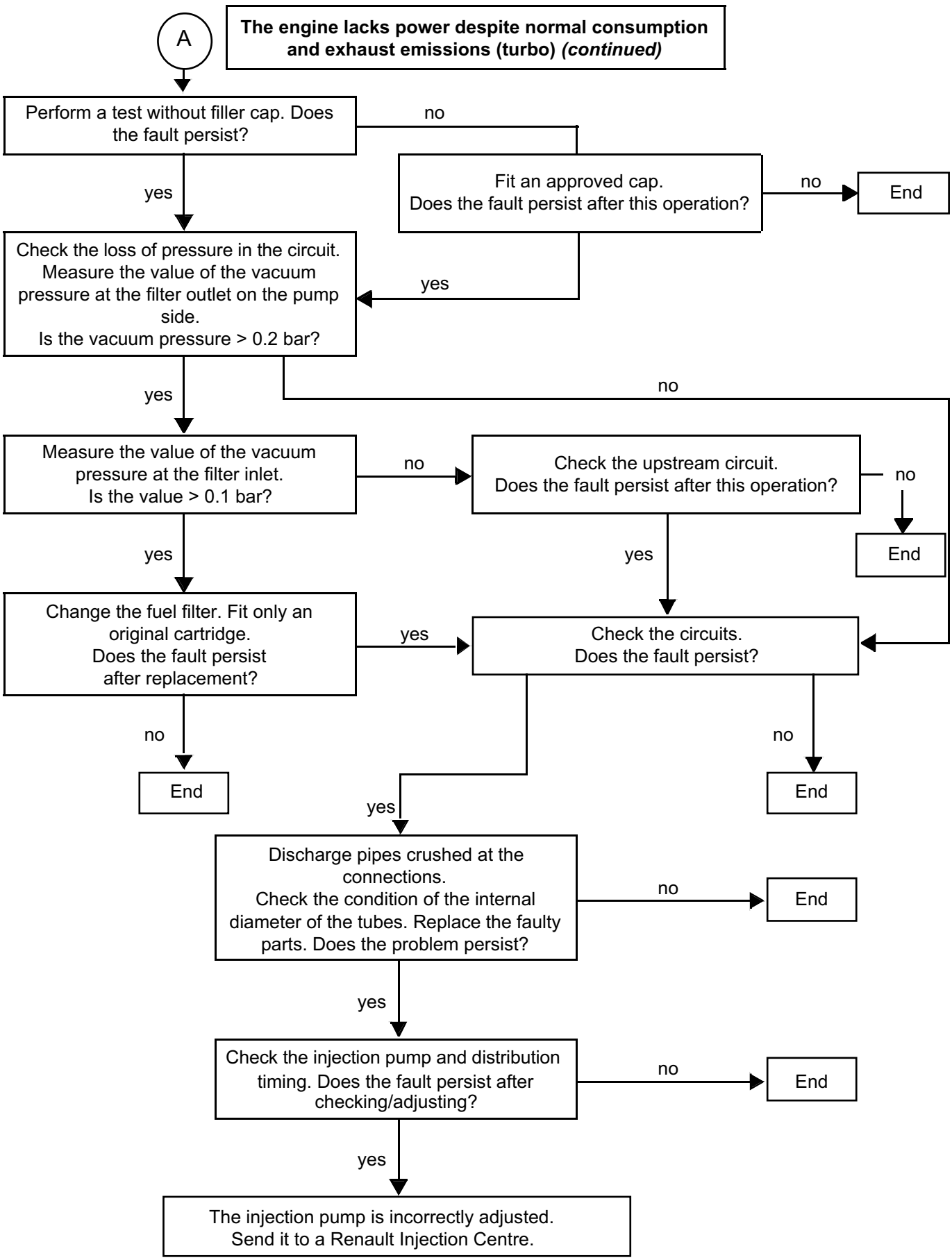
A
The engine lacks power despite normal consumption and exhaust emissions (turbo) (continued)
Perform a test without filler cap. Does the fault persist?
no
yes
Fit an approved cap. Does the fault persist after this operation?
no
End
yes
Check the loss of pressure in the circuit. Measure the value of the vacuum pressure at the filter outlet on the pump side. Is the vacuum pressure > 0.2 bar?
yes
no
Measure the value of the vacuum pressure at the filter inlet. Is the value > 0.1 bar?
no
Check the upstream circuit. Does the fault persist after this operation?
no
End
yes
yes
Change the fuel filter. Fit only an original cartridge. Does the fault persist after replacement?
yes
Check the circuits. Does the fault persist?
no
End
no
End
yes
Discharge pipes crushed at the connections. Check the condition of the internal diameter of the tubes. Replace the faulty parts. Does the problem persist?
no
End
yes
Check the injection pump and distribution timing. Does the fault persist after checking/adjusting?
no
End
yes
The injection pump is incorrectly adjusted. Send it to a Renault Injection Centre.

The engine lacks power and there is abnormal consumption and exhaust emissions (turbo)

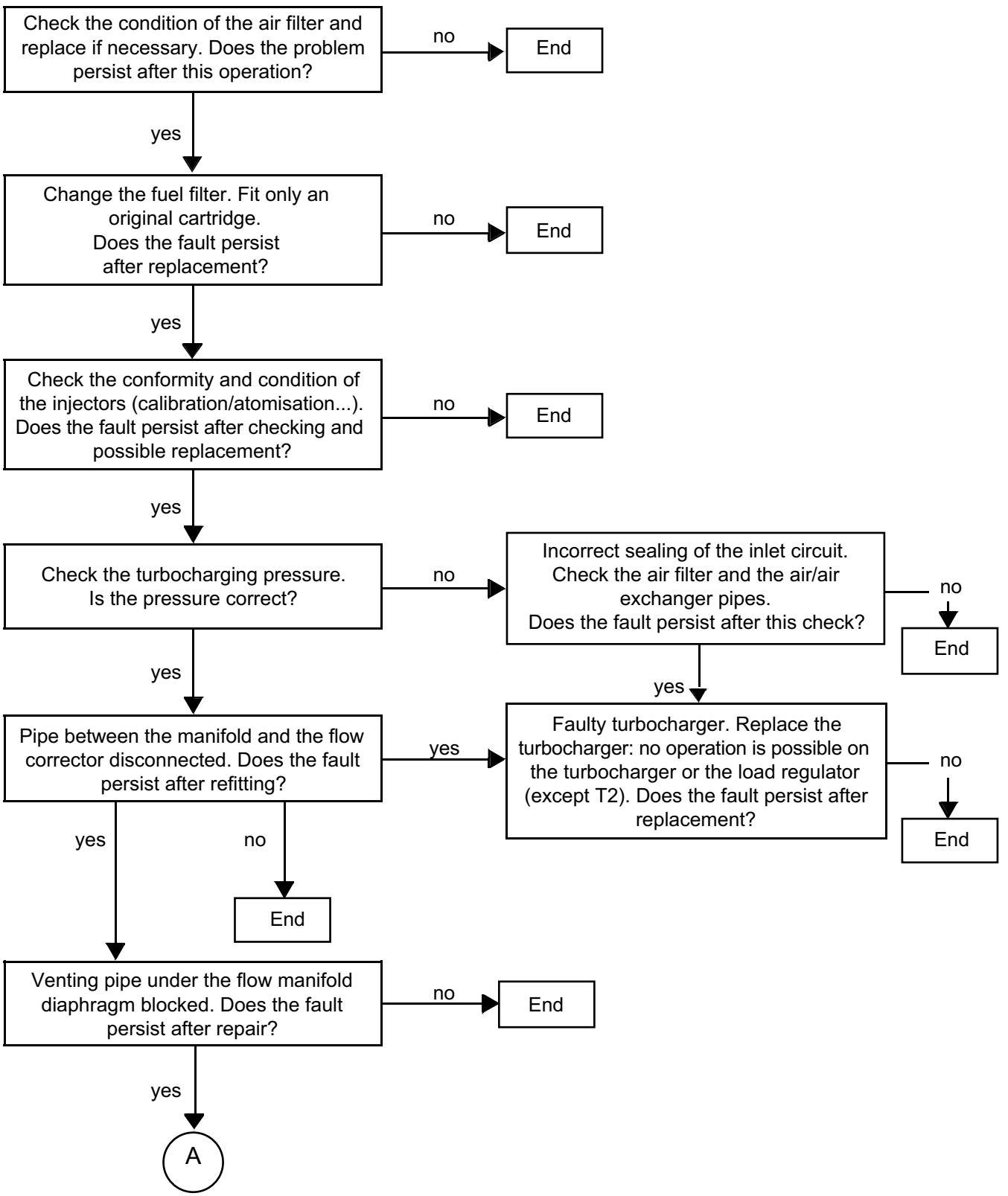

The engine lacks power and there is abnormal consumption and exhaust emissions (turbo) ***(continued)***

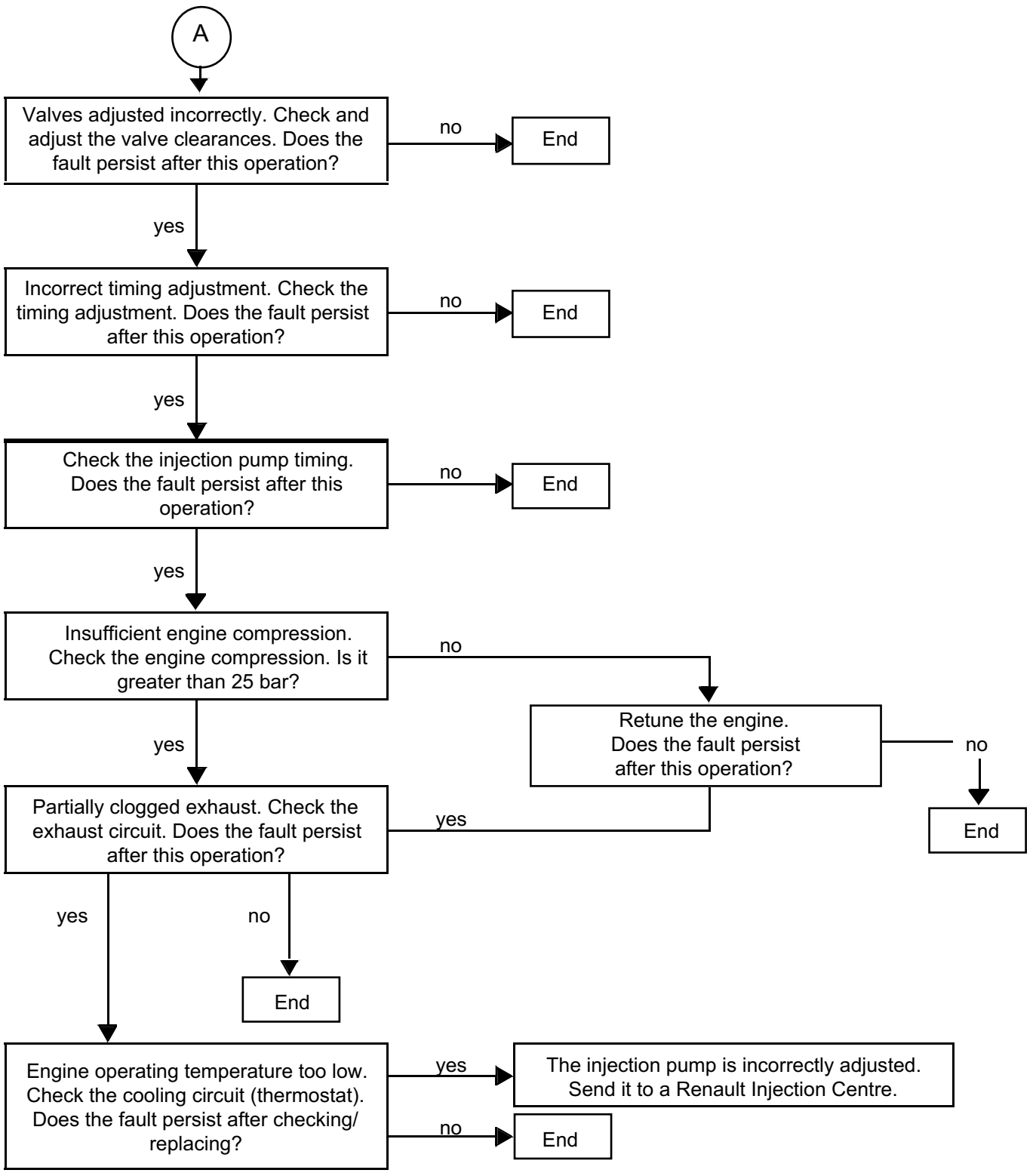

The engine emits blue exhaust fumes

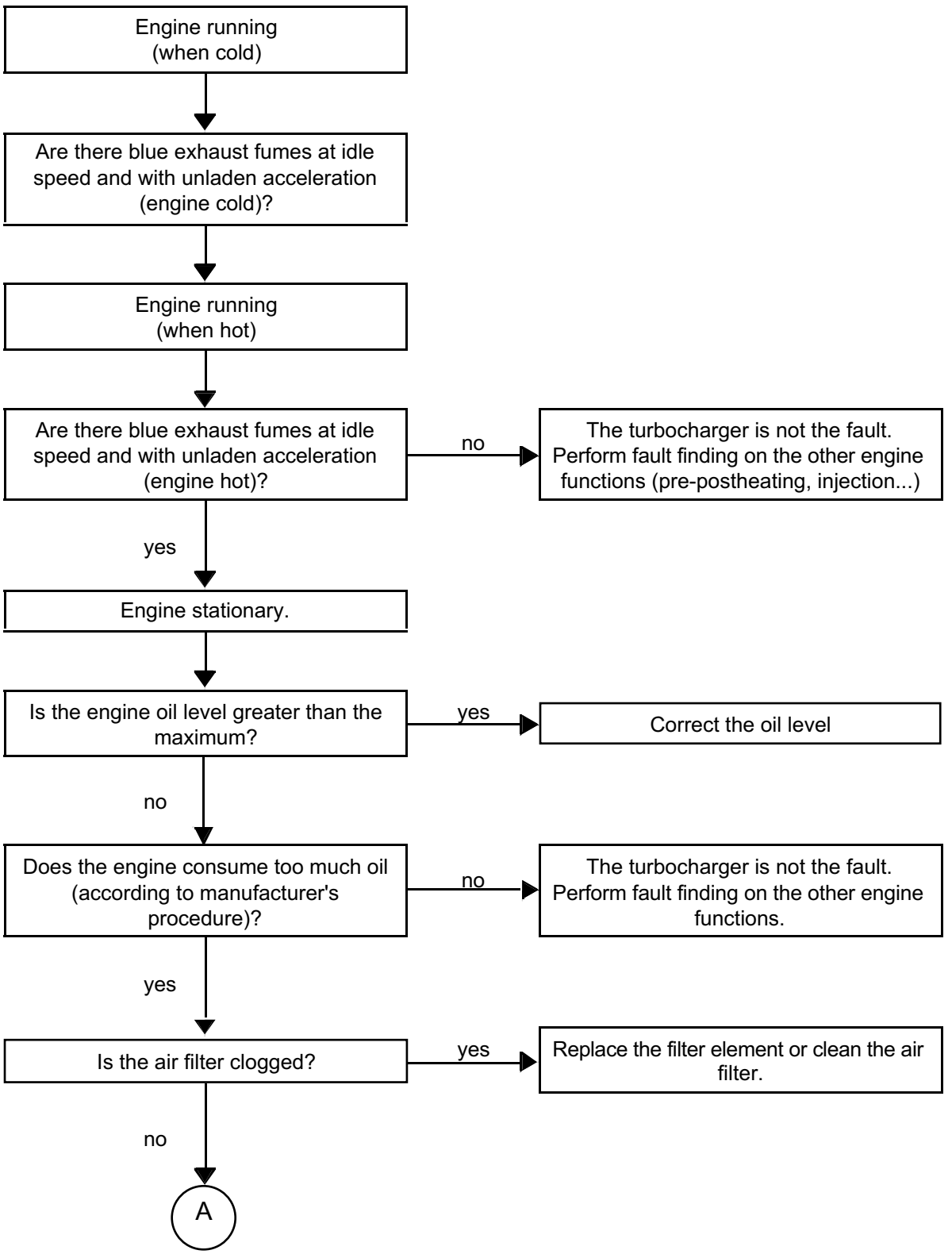

The engine emits blue exhaust fumes *(continued)*

A

Check the air supply circuit from the air filter to the turbocharger and from the turbocharger to the engine (tightness, conformity...)

Engine running

Is the air inlet circuit between the turbocharger and the engine tight?

- no → Replace the faulty parts or eliminate the leak
- yes ↓

Are the air ducts deformed or pinched, are they deformed or pinched with unladen acceleration?

- yes → Replace the air ducts concerned
- no ↓

Engine stationary.

Is the air duct between the turbocharger and the exchanger (or between the turbocharger and the engine, if there is no exchanger) abnormally greasy *(*)* ?

- no → B
- yes ↓

Is the air duct from the air filter greasy at the turbocharger inlet?

- yes → Check the crankcase gas recirculation system (oil decanter, crankcase vent, ...) and the gas pressure in the cylinder block.
- no ↓

Is the oil return pipe from the turbocharger blocked, deformed or pinched?

- yes → Replace the turbocharger oil return pipe
- no ↓

Remove the turbocharger

(*) ***Note**: It is normal to find traces of oil at the turbocharger inlet and outlet, as the air entering the compressor contains oil from the engine rebreathing circuit*

B

The engine emits blue exhaust fumes *(continued)*

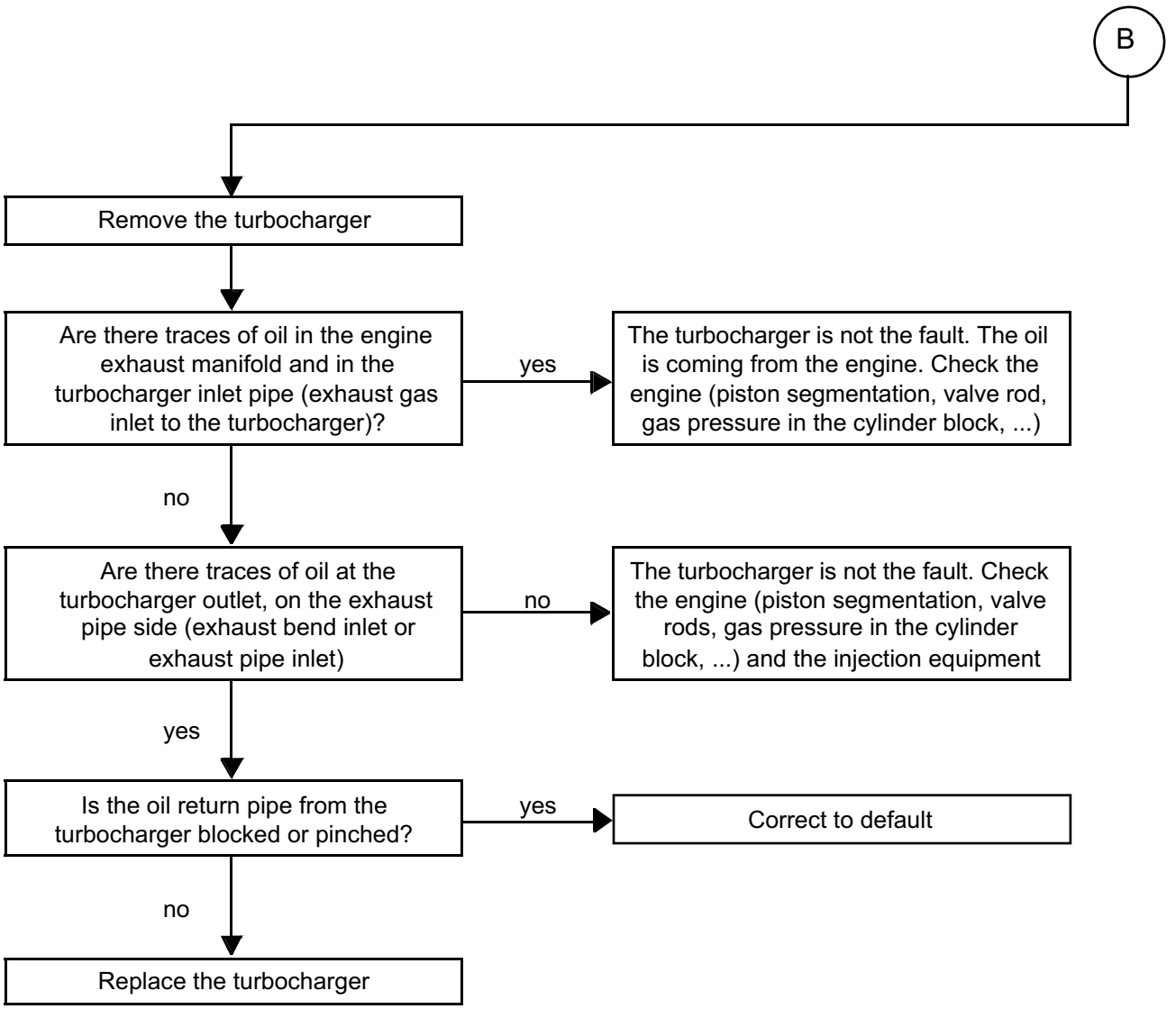

The engine produces black exhaust fumes

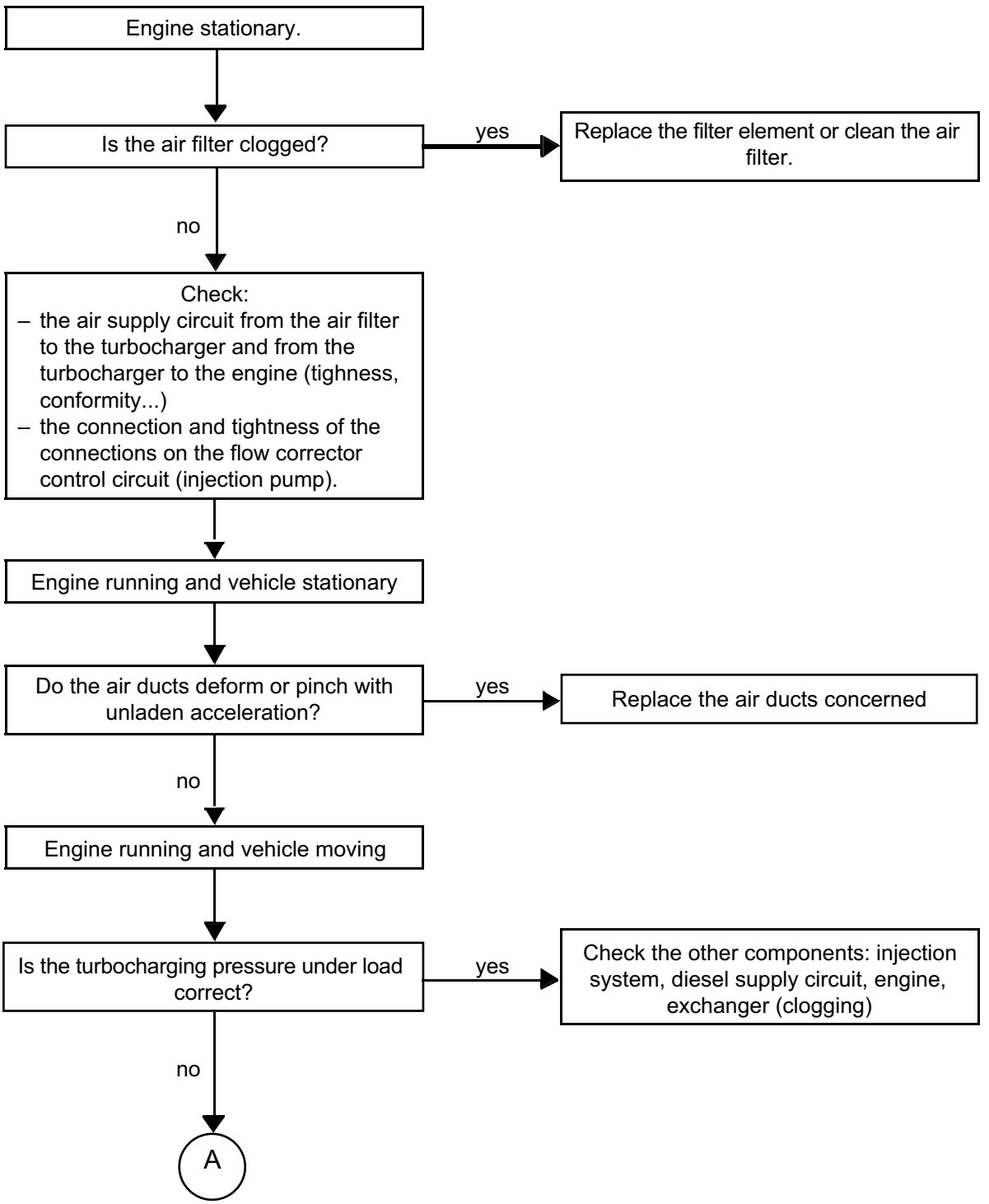

The engine produces black exhaust fumes *(continued)*

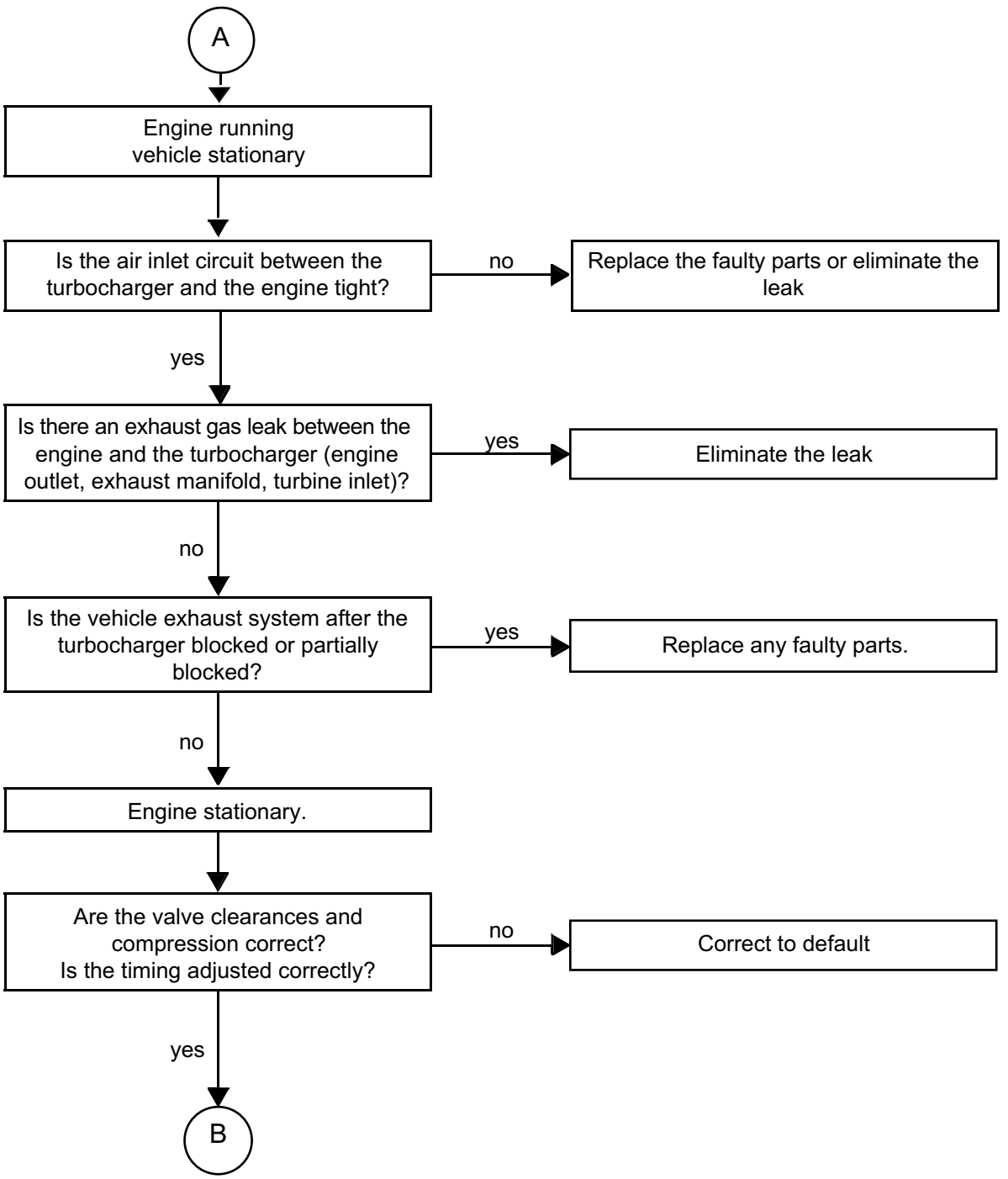

The engine produces black exhaust fumes *(continued)*

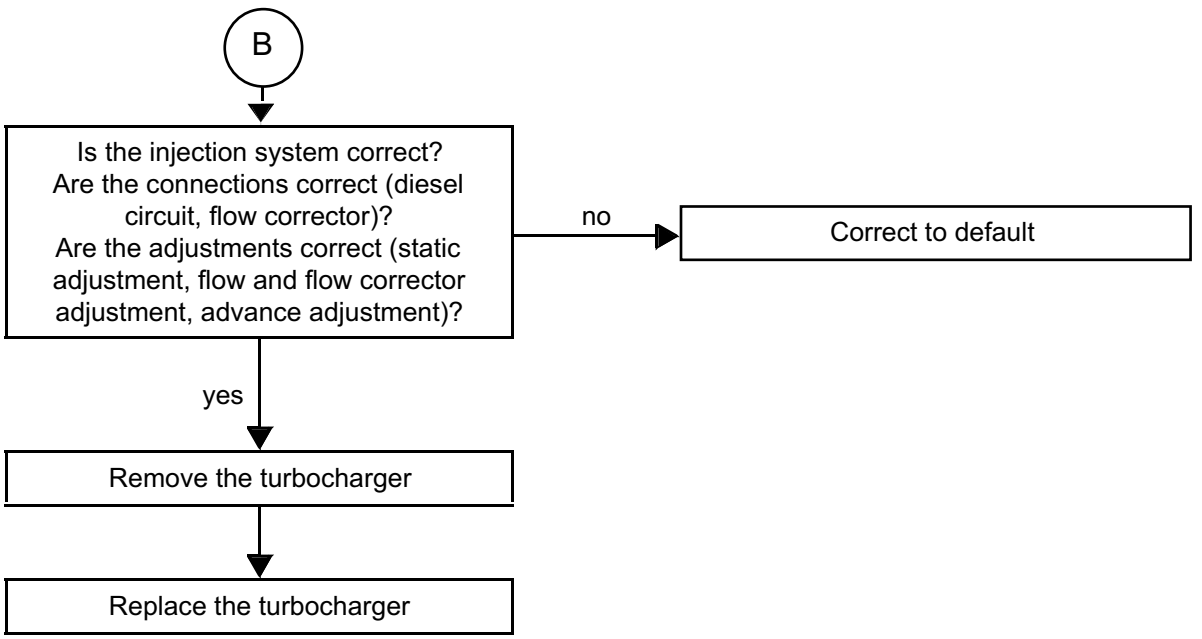

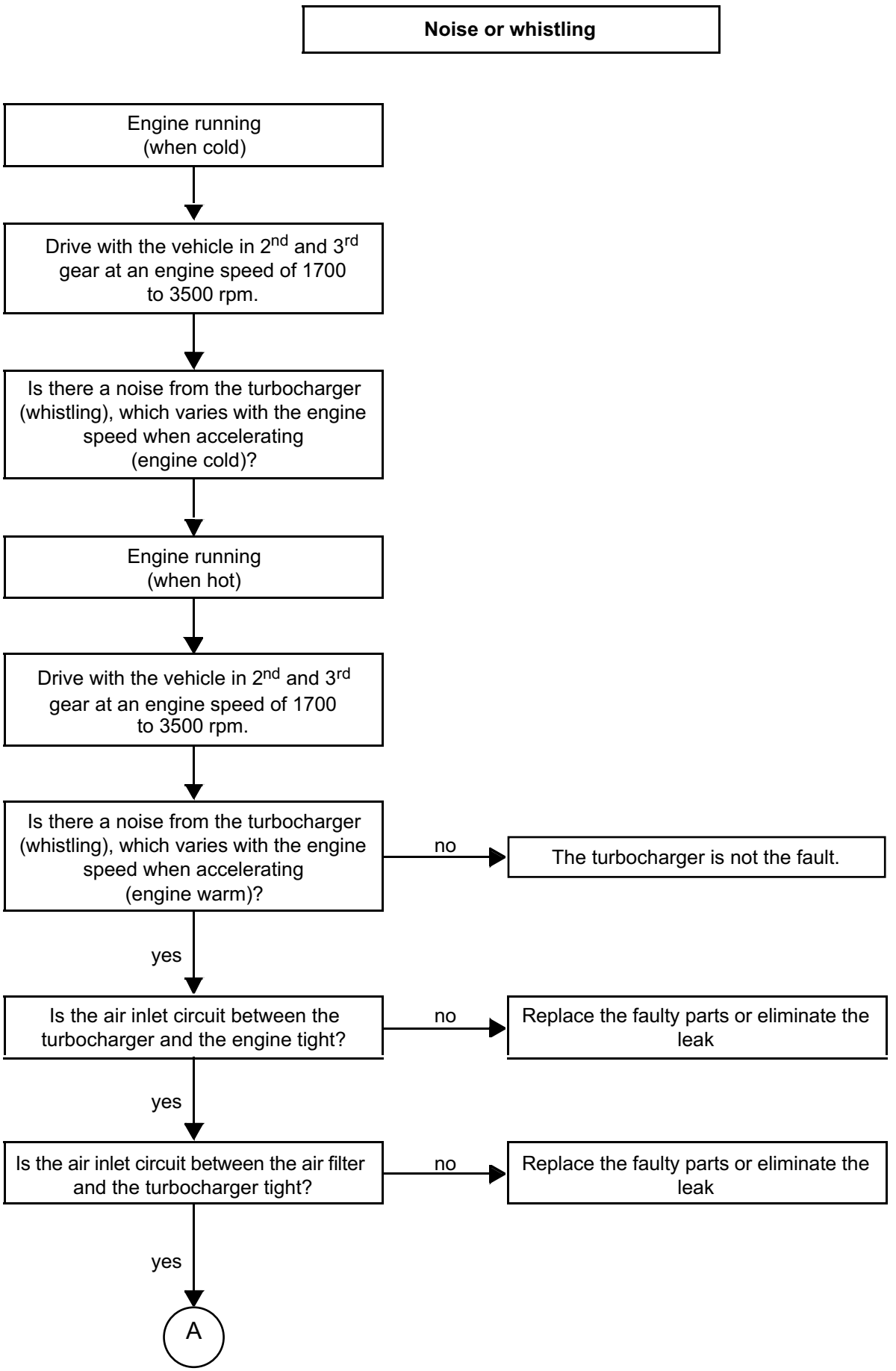
Noise or whistling
Engine running (when cold)
Drive with the vehicle in 2nd and 3rd gear at an engine speed of 1700 to 3500 rpm.
Is there a noise from the turbocharger (whistling), which varies with the engine speed when accelerating (engine cold)?
Engine running (when hot)
Drive with the vehicle in 2nd and 3rd gear at an engine speed of 1700 to 3500 rpm.
Is there a noise from the turbocharger (whistling), which varies with the engine speed when accelerating (engine warm)?
no
The turbocharger is not the fault.
yes
Is the air inlet circuit between the turbocharger and the engine tight?
no
Replace the faulty parts or eliminate the leak
yes
Is the air inlet circuit between the air filter and the turbocharger tight?
no
Replace the faulty parts or eliminate the leak
yes
A

Noise and whistling *(continued)*

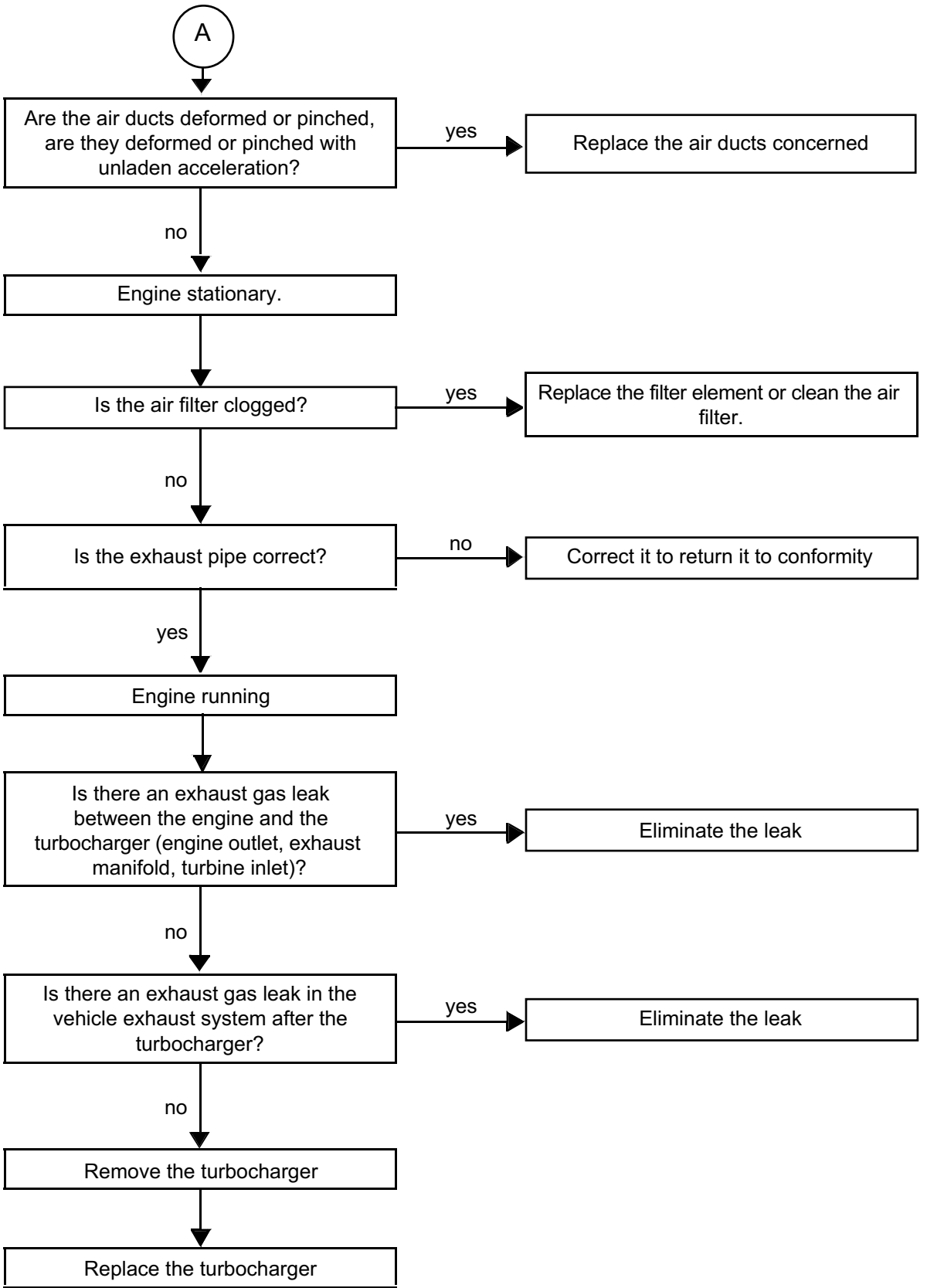

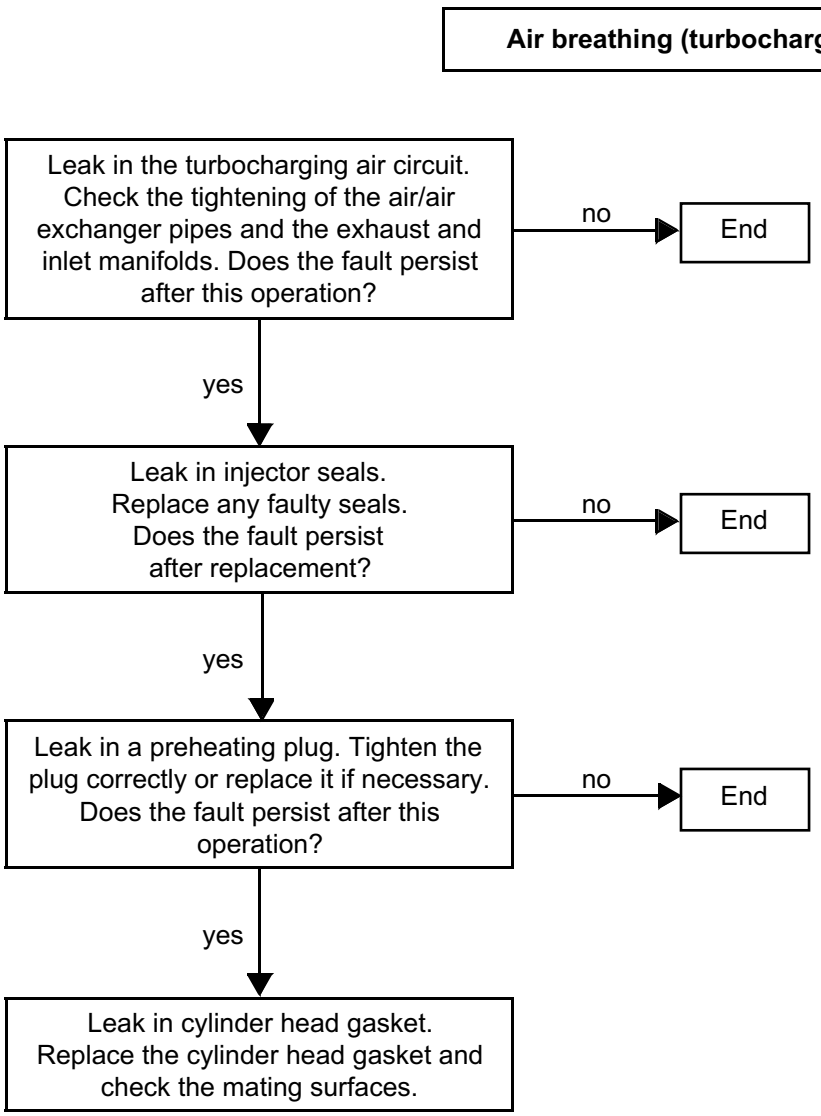
Air breathing (turbocharger)
Leak in the turbocharging air circuit. Check the tightening of the air/air exchanger pipes and the exhaust and inlet manifolds. Does the fault persist after this operation?
no
End
yes
Leak in injector seals. Replace any faulty seals. Does the fault persist after replacement?
no
End
yes
Leak in a preheating plug. Tighten the plug correctly or replace it if necessary. Does the fault persist after this operation?
no
End
yes
Leak in cylinder head gasket. Replace the cylinder head gasket and check the mating surfaces.

Kangoo

Type	S/Section
XC0 X	87

87 ELECTRIC SUNROOF

- Engine: **XXX**
- Gearbox: **XXX**

Electrical features of the sunroof.

For special considerations in the removal of trim and replacement of the roof, refer to **bodywork Technical Note 559A.**

"The repair methods given by the manufacturer in this document are based on the technical specifications current when it was prepared.

The methods may be modified as a result of changes introduced by the manufacturer in the production of the various component units and accessories from which his vehicles are constructed."

All copyrights reserved by Renault.

Copying or translating, in part or in full, of this document or use of the service part reference numbering system is forbidden without the prior written authority of Renault.

© RENAULT 2000

CONTROL BUTTON

The control button is located on the central console beside central door locking button.

It is attached by two screws. The central console needs to be removed to allow the control button to be removed.

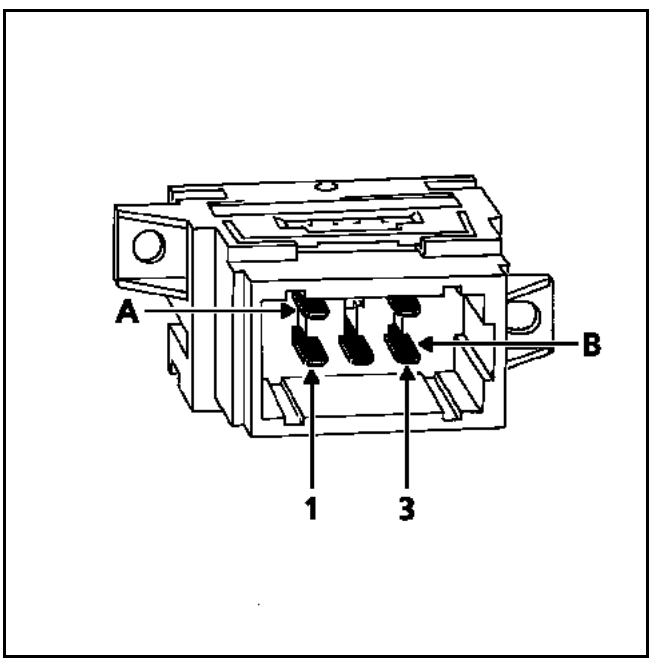

Track	Description
A1	Motor control
A2	Light supply
A3	Fuse supply (sunroof motor)
B1	Supply (common with A3)
B2	Earth
B3	Motor control

DRIVE MOTOR

To remove the drive motor, remove the courtesy light and the headlining as described in the bodywork Technical Note.

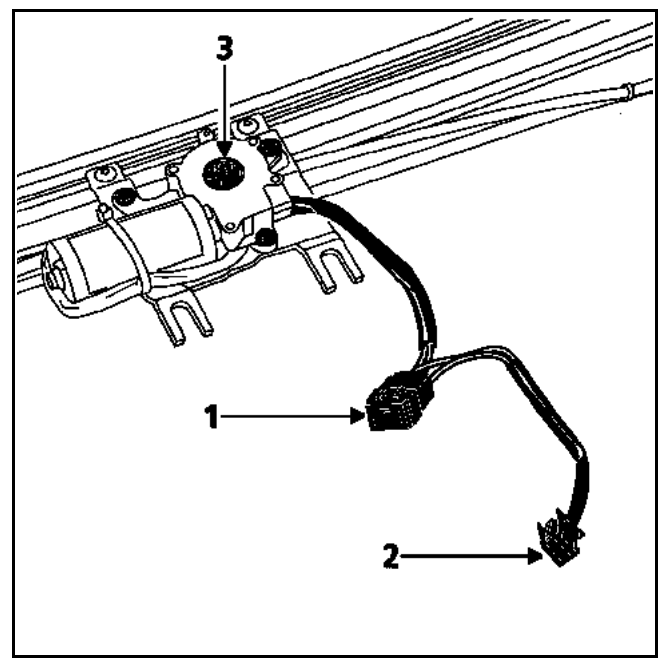

1 Supply connector motor + courtesy light
2 Courtesy light supply connector

NB: If the motor is not functioning, the sunroof can be closed by turning an Allen key in the hole (3). Push in the key to engage the drive.

RENAULT

Technical Note 3451A

XXXX

Affected vehicles: All types

Basic manual: Technical Note 3439A and 3669A

Sub-section concerned: 20A

Clutch: Fault finding aid

The purpose of this Technical Note is to avoid parts being removed in after-sales without a priori technical justification.

It consists of a clutch fault finding aid for:
difficulties in changing gear,
vibrations,
noise.

77 11 298 722 **Edition 2 - DECEMBER 2004** **EDITION ANGLAISE**

"The repair procedures given by the Manufacturer in this document are based on the technical specifications current when it was prepared.

The methods may be modified as a result of changes introduced by the manufacturer in the production of the various component units and accessories from which their vehicles are constructed."

RENAULT s.a.s. reserves all copyright

Copying or translating, in part or in full, of this document or use of the service part reference numbering system is prohibited without the prior written authority of RENAULT s.a.s.

© Renault s.a.s. 2004

GEAR CHANGE PROBLEMS (grinding - stiff point)

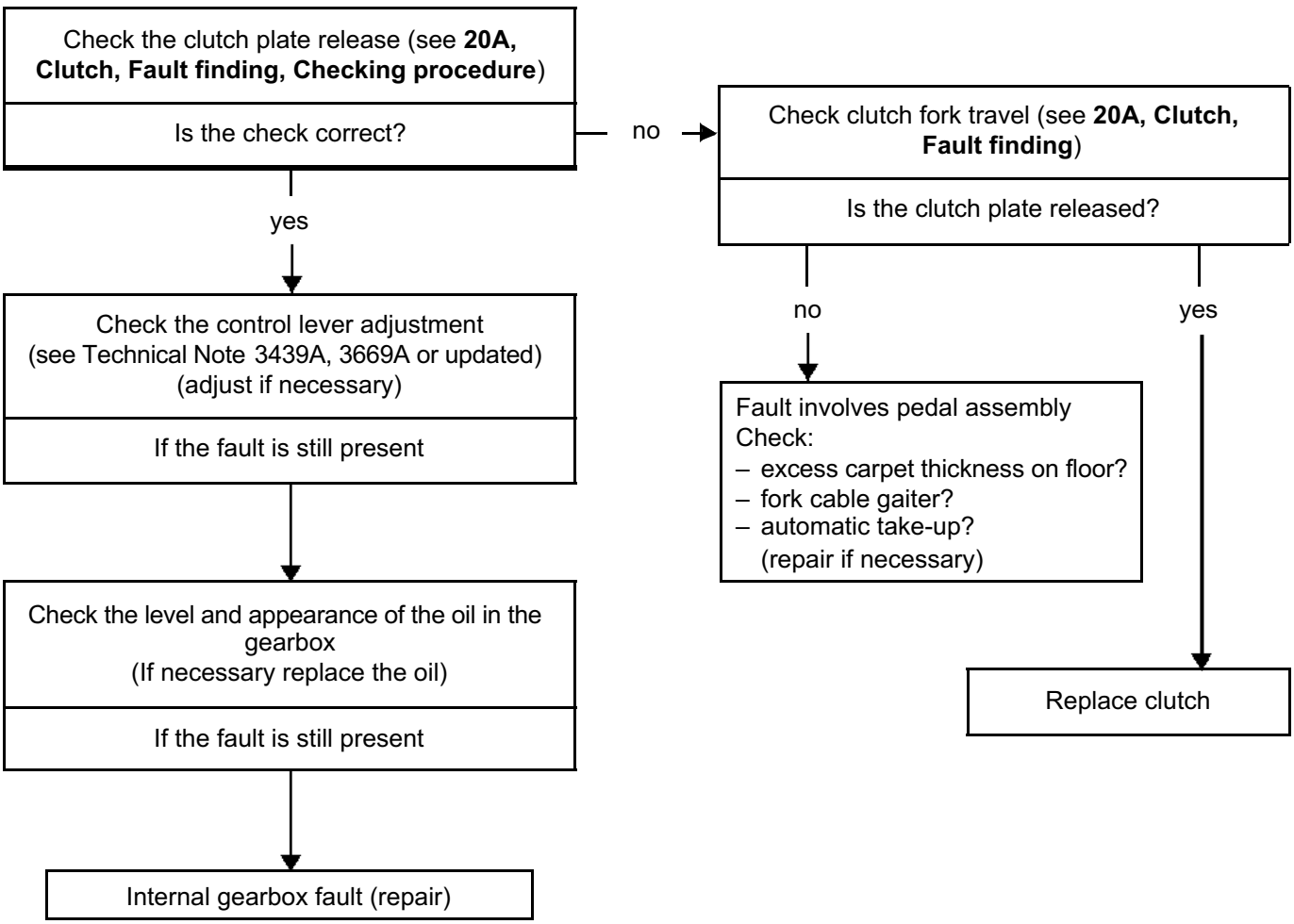

VIBRATION

Check if there is grease in the clutch housing

Otherwise → Treat the leak and replace the clutch plate or the whole clutch

↓

Check tightness and condition of engine and gearbox supports (repair if necessary)

If the fault is still present

↓

Check the clutch control slides properly (repair if necessary)

If the fault is still present

↓

Check the idling speed (unstable or low). Adjust if necessary

If the fault is still present

↓

Replace clutch

NOISE IN NEUTRAL
(dull, regular sound modulated by engine speed, coming from grinding of gear wheels in gearbox)

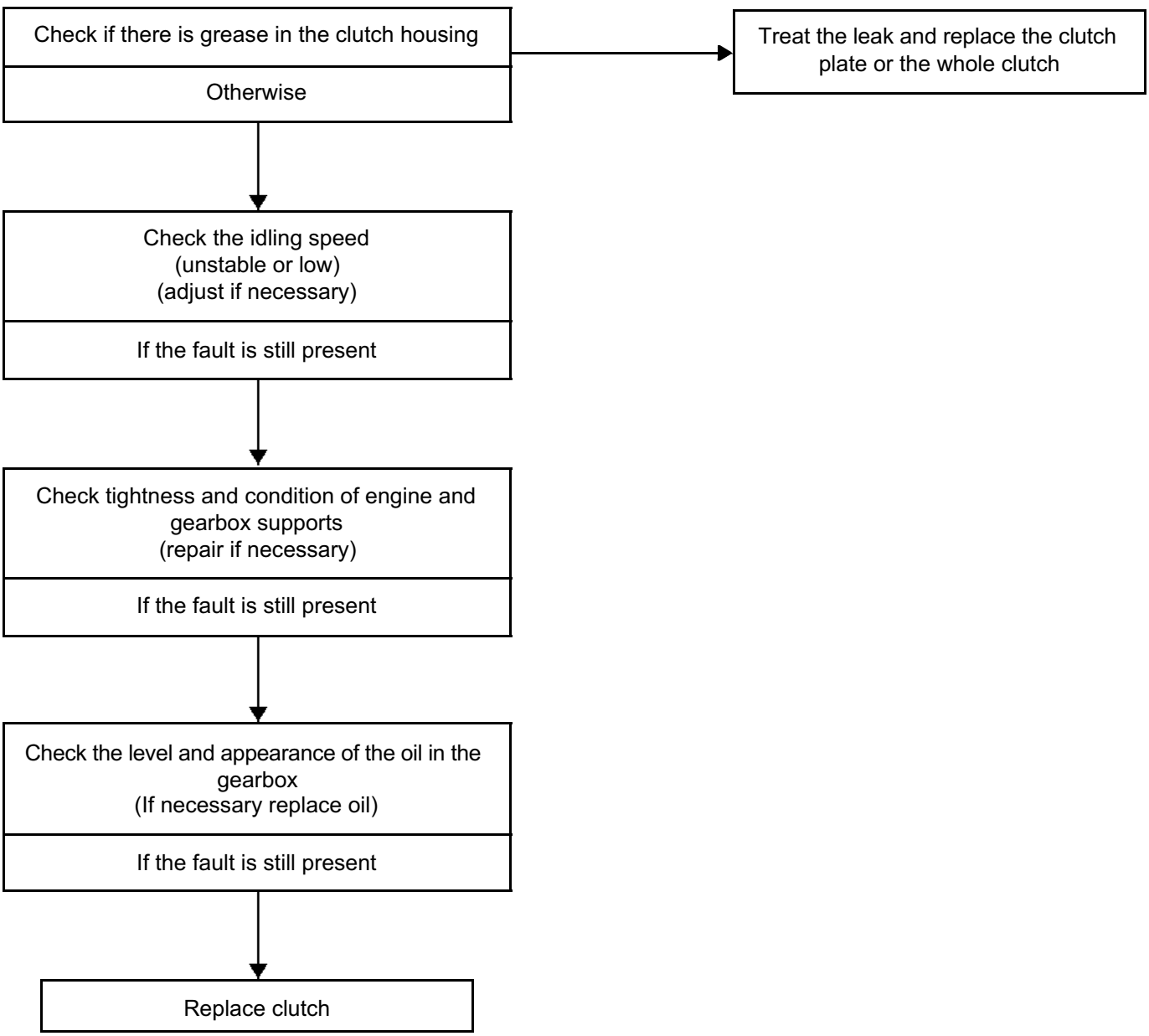

CHECKING PROCEDURE

CLUTCH PLATE RELEASE
(engine warm at idle speed)

Gearbox without reverse gear brake:
- declutch,
- wait for **3 seconds**,
- select reverse gear (there should be no grinding).

Gearbox with reverse gear brake or synchronisation:
- declutch,
- partly engage 3rd gear (the objective is to position the sliding gear wheel teeth close to the dog clutches without engaging gear),
- declutch,
- wait for **3 seconds**,
- engage 3rd gear (there should be no grinding).

FORK TRAVEL

Using a tape measure:
- measure the distance between the top of the fork and the sleeve stop mounting in engaged position,
- repeat the same operation in declutched position,
- note the difference and compare with the correspondence table.

FORK TRAVEL CORRESPONDENCE TABLE (CONTINUED)

VEHICLES	ENGINE (dimensions in mm)					
	C1C	C1E	C1G	C1J	C2J	C3J
R19			17 MIN 20 MAX	17 MIN 20 MAX	17 MIN 20 MAX	17 MIN 20 MAX
R21					17 MIN 20 MAX	
EXPRESS	17 MIN 20 MAX	17 MIN 20 MAX		17 MIN 20 MAX	17 MIN 20 MAX	17 MIN 20 MAX
SUPER 5	17 MIN 20 MAX	17 MIN 20 MAX		17 MIN 20 MAX	17 MIN 20 MAX	17 MIN 20 MAX
TWINGO						
CLIO		17 MIN 20 MAX				
CLIO II						
KANGOO						
LAGUNA						
MEGANE						
SAFRANE						
ESPACE						
MASTER						

FORK TRAVEL CORRESPONDENCE TABLE (CONTINUED)

VEHICLES	ENGINE (dimensions in mm)					
	C3G	D7F* Controlled clutch	D7F	E5F	E6J	E7F
R19					17 MIN 20 MAX	
R21						
EXTRA						
SUPER 5						
TWINGO	17 MIN 20 MAX	17 MIN 20 MAX	17 MIN 20 MAX			
CLIO	17 MIN 20 MAX		17 MIN 20 MAX	17 MIN 20 MAX	17 MIN 20 MAX	17 MIN 20 MAX
CLIO II			27 MIN 30 MAX	17MINI 20 MAXI		
KANGOO			27 MIN 30 MAX			
LAGUNA						
MEGANE			27 MIN 30 MAX			
SAFRANE						
ESPACE						
MASTER						

FORK TRAVEL CORRESPONDENCE TABLE (CONTINUED)

VEHICLES	ENGINE (dimensions in mm)					
	E7J ∅ 180	E7J ∅200	F2N	F3N	F3P	F3R
R19	17 MIN 20 MAX	17 MIN 20 MAX	17 MIN 20 MAX	17 MIN 20 MAX	17 MIN 20 MAX	
R21			17 MIN 20 MAX	17 MIN 20 MAX		
EXTRA			17 MIN 20 MAX			
SUPER 5			17 MIN 20 MAX			
TWINGO						
CLIO	25 MIN 30 MAX	17 MIN 20 MAX			17 MIN 20 MAX	
CLIO II		27 MIN 30 MAX	17 MIN 20 MAX	17 MIN 20 MAX		
KANGOO	27 MIN 30 MAX	27 MIN 30 MAX				
LAGUNA	27 MIN 30 MAX	27 MIN 30 MAX			27 MIN 30 MAX	27 MIN 30 MAX
MEGANE		17 MIN 20 MAX	17 MIN 20 MAX			27 MIN 30 MAX
SAFRANE						
ESPACE						27 MIN 30 MAX
MASTER						

FORK TRAVEL CORRESPONDENCE TABLE (CONTINUED)

VEHICLES	ENGINE (dimensions in mm)					
	F4P	F4R	F5R	F7P	F7R	F8Q
R19				17 MIN 20 MAX		17 MIN 20 MAX
R21						17 MIN 20 MAX
EXTRA						17 MIN 20 MAX
SUPER 5						17 MIN 20 MAX
TWINGO						
CLIO						17 MIN 20 MAX
CLIO II						27 MIN 30 MAX
KANGOO						27 MIN 30 MAX
LAGUNA		27 MIN 30 MAX				17 MIN 20 MAX
MEGANE	27 MIN 30 MAX	27 MIN 30 MAX	27 MIN 30 MAX		27 MIN 30 MAX	27 MIN 30 MAX
SAFRANE						
ESPACE		27 MIN 30 MAX				
MASTER						

FORK TRAVEL CORRESPONDENCE TABLE (CONTINUED)

VEHICLES	ENGINE (dimensions in mm)					
	F8QT	F9Q	G8T	G8Tt	K4J	K4M
R19						
R21						
EXTRA						
SUPER 5						
TWINGO						
CLIO					28 MIN 32 MAX	17 MIN 20 MAX
CLIO II		27 MIN 30 MAX				27 MIN 30 MAX
KANGOO		27 MIN 30 MAX				
LAGUNA		27 MIN 30 MAX	27 MIN 30 MAX	27 MIN 30 MAX		27 MIN 30 MAX
MEGANE	27 MIN 30 MAX	27 MIN 30 MAX			27 MIN 30 MAX	27 MIN 30 MAX
SAFRANE				12 MIN 13 MAX		
ESPACE		27 MIN 30 MAX	12 MIN 13 MAX			
MASTER						

FORK TRAVEL CORRESPONDENCE TABLE (CONTINUED)

VEHICLES	ENGINE (dimensions in mm)					
	K7M	L7X	N7Q	N7U	S8U	S9W
R19						
R21						
EXTRA						
SUPER 5						
TWINGO						
CLIO						
CLIO II	27 MIN 30 MAX					
KANGOO	27 MIN 30 MAX					
LAGUNA		12 MIN 13 MAX	27 MIN 30 MAX			
MEGANE	27 MIN 30 MAX					
SAFRANE			17 MIN 19 MAX	17 MIN 19 MAX		
ESPACE						
MASTER					12 MIN 13 MAX	12 MIN 13 MAX

FORK TRAVEL CORRESPONDENCE TABLE (CONTINUED)

VEHICLES	ENGINE (dimensions in mm)
	Z7X
R19	
R21	
EXTRA	
SUPER 5	
TWINGO	
CLIO	
CLIO II	
KANGOO	
LAGUNA	27 MIN 30 MAX
MEGANE	
SAFRANE	10 MIN 11 MAX
ESPACE	
MASTER	

IMPORTANT POINTS TO REMEMBER DURING CLUTCH REPLACEMENT

Before refitting, check:
- the friction track (scratches - bluing),
- the pilot ring or crankshaft bearing if fitted (seizing),
- tightness of engine/gearbox seals (leaks possible),
- the thrust bearing guide and the fork (scratching and wear),
- the input shaft grooves (no trace of rust),
- the proper sliding of the clutch plate on the input shaft (without grease),
- the correct sliding of the stop on its guide (lightly lubricated),
- the fork supports and seals (lightly lubricated).

During reassembly, check:
- the friction plate is fitted in the correct direction,
- the centring of the friction plate,
- the progressive tightening and torque of the assembly bolts,
- the position of the fork hook,
- the mating of the engine crankcase (must be carried out without any obstructions).

After refitting, check:
- the adjustment of the clearance (if there is one),
- the bleeding for the hydraulic circuit.

Carry out a road test.

Master

TECHNICAL NOTE 3481A

Basic manual: Workshop Repair Manual 323 and Technical Note 3423A

Special features of Master vehicles fitted with 16 inch wheels

77 11 301 762 **MARCH 2001** **EDITION ANGLAISE**

"The repair methods given by the manufacturer in this document are based on the technical specifications current when it was prepared.

The methods may be modified as a result of changes introduced by the manufacturer in the production of the various component units and accessories from which his vehicles are constructed."

All copyrights reserved by Renault.

Copying or translating, in part or in full, of this document or use of the service part reference numbering system is forbidden without the prior written authority of Renault.

© RENAULT 2001

Contents

Page

07 VALUES AND SETTINGS

Tyres and wheels	07-1
Brakes	07-2
Suspension	07-3
Brake limiter	07-4
Dimensions	07-23
Underbody height	07-24
Front axle angle checking values	07-25
Rear axle angle checking values	07-32

Vehicle	Rim	Tyres	Tyre pressure when cold (in bar) (1)	
			Front	Rear
XDXX	6J16	195/65R16 225/65R16 215/65R16 205/75R16	3.8 3.8 3.9 4.2	3.8 4.4 4.3 4.75

(1) With full load and on motorways.

Wheel nut tightening torque: **9 daNm**

Rim run-out: **1.2 mm**

Vehicle	Disc thickness (in mm)		Disc thickness (in mm)		Max. disc run-out (in mm)
	Front		Rear		
	Normal	Min.	Normal	Min.	
XDXX	28	25	12	10	0.07

Vehicle	Lining thicknesses (in mm) (including backing)				Brake fluid
	Front		Rear		
	New	Min.	New	Min.	
XDXX	17.8	8	16.9	7.5	SAE J1703 DOT 4

Normal suspension

Weight	Front stabiliser bar	Rear spring	Rear stabiliser bar	Tyre
VANS				
2T8	NO	Mono-layer steel	NO	195/65R16
3T3/3T5	YES	Composite	NO	215/65R16
3T5	YES	Composite	YES	225/65R16
2T8 F9Q	NO	Composite	NO	195/65R16
COMBI				
2T8	NO	Mono-layer steel	NO	195/65R16
2T8	NO	Composite	NO	215/65R16
3T5	YES	Composite	NO	225/65R16
2T8 F9Q	NO	Composite	NO	195/65R16
CAB FLOOR				
3T5	YES	Composite	YES	225/65R16
BUS				
	YES	Composite	NO	225/65R16

Reinforced suspension

Weight	Front stabiliser bar	Rear spring	Rear stabiliser bar	Tyre
VANS				
2T8	NO	Composite	NO	195/65R16
3T3/3T5	YES	Bi-layer steel	NO	215/65R16
3T5	YES	Bi-layer steel	NO	225/65R16
COMBI				
2T8	NO	Composite	NO	195/65R16
2T8	YES	Bi-layer steel	NO	215/65R16
3T5	YES	Bi-layer steel	NO	225/65R16
CAB FLOOR				
3T5	YES	Reinforced mono-layer steel	YES	225/65R16
CAB CHASSIS - DOUBLE CAB				
3T5	YES	Reinforced mono-layer steel	YES	225/65R16

BRAKING PRESSURE
Full fuel tank
Driver on board

Vehicle	Checking pressure (1) (in bar)	
	Front	Rear
XDXX (2800 kg) L1 (2)	100 →	17.55 +7,65 -0
FDXX (3300 kg) L1 (2) FDXX (3500 kg) L1 (2) FDXX (2800 kg) L1 (3) JDXX (2800 kg) L1 (3)	100 →	19.75 +8 -0
JDXX (2800 kg) L2 (2) JDXX (3500 kg) L2 (2) FDXX (3500 kg) L2 L3 (2) EDXX (3500 kg) L2 L3 (2) GDXX (3500 kg) L2 L3 (2) FDXX (3300 kg) L1 (3) FDXX (3500 kg) L1 (3) JDXX (2800 kg) L2 (3) FDXX (3500 kg) L2 L3 (3) JDXX (3500 kg) L2 (3)	100 →	17.55 +6 -0
EDXX (3500 kg) L2 L3 (3) GDXX (3500 kg) L2 L3 (3) UDXX (3500 kg) L2 L3 (3) HDXX (3500 kg) L2 L3 (3)		

(1) The check is performed using two pressure gauges in an X arrangement.
(2) Normal suspension.
(3) Reinforced suspension.

L1: Wheelbase of **3078 mm**
L2: Wheelbase of **3578 mm**
L3: Wheelbase of **4078 mm**

The check is performed using two pressure gauges, one connected to the left hand front wheel and the other connected to the right hand rear wheel.

N.B.: to determine the limiter pressure when the vehicle is laden, use the tyre deflection method.

NOTE: on vehicles fitted with **ABS**, the brake limiter is not fitted. Brake limiting is carried out by a special program in the **ABS** unit computer called **EBD** (Electronic Braking Distribution).

WARNING: if the **ABS** fuse is removed, do not brake sharply during road tests as the **EBD** function is no longer active (the pressure is the same in the front and rear) and there is a risk of **slewing**.

ADJUSTMENT

The method for adjusting the limiters currently used in After Sales is simple and only involves using two pressure gauges which must be connected to the braking circuit (front right wheel and rear left wheel).

Checking and adjustment is carried out with the vehicle unladen, the fuel tank full and the driver on board.

After exerting a certain pressure at the front by pressing the brake pedal, simply read the pressure at the rear and compare it to the value given in this note. Then, loosen the bolt (1) on the limiter rod (2) so that the rod can be used for adjusting.

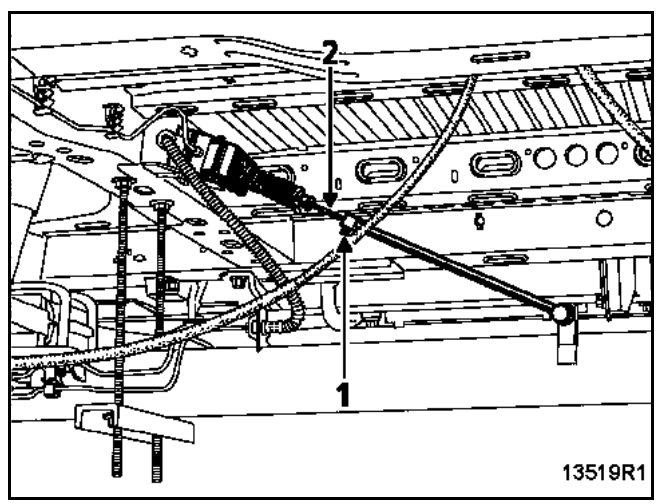

This method **must not be used** for laden vehicles, especially utility vehicles fitted with full shelves.

The special case of utility vehicles has led to the development of a different adjustment method which uses a deflection calculation (index of crushing) for the tyres (this is inexpensive but must be carried out with care). Then, simply refer to the rear pressure graphs established in accordance with the load (on the rear axle) and the deflection of the tyres.

Tooling required:

– A tape measure on a support (used for measuring underbody heights).

– An inflator with a precision pressure gauge.

1 Preparing the vehicle

The vehicle must remain loaded.

The operator whose job it is to press the brake pedal when the limiter is to be adjusted must be in the vehicle when the **radius under load** of the rear wheels is measured.

The vehicle must be on a flat horizontal surface, which is smooth and clean (use a four-post lift if possible).

2 Marking the centre of the rear wheels

Lift the rear of the vehicle so that the rear wheels can be turned.

Place a piece of chalk on the hub cover or the trim at the point which seems as close as possible to the centre of the wheel.

Turn the wheel quite quickly by hand while pressing firmly on the chalk. This operation allows concentric circles to be marked around the true centre of rotation on the wheel.

Mark the centre with a pencil cross on the chalk.

Repeat the operation for the second rear wheel.

3 Adjusting the rear tyre pressure

The pressure must be adjusted with the wheels on the ground and someone in the driver's seat.

Deflate the two rear wheels to reduce the pressure to **1.5 bar** (use a correctly calibrated precision pressure gauge).

Wait a few minutes for the air in the tyres to return to ambient temperature as it is cooled during deflation and its pressure has thus been changed.

Readjust the pressure to **1.5 bar** as precisely as possible.

4 Measuring the radius when unladen

Lift the rear wheel so that the tyres are no longer deformed by the axle load (as soon as the wheels leave the ground).

Measure the distance between the ground and the centre of the wheel using the tape measure.

5 Measuring the radius with the rear wheels loaded

Place the vehicle on its wheels.

Measure the distance between the ground and the centre of the wheel using the tape measure.

6 Calculating the tyre deflection

Subtract the two measurements taken previously to obtain the tyre deflection.

7 Repeat steps 4 to 6 for the second rear wheel

8 Calculating the average deflection of the two tyres

Add together the values of the two deflections measured for the rear wheels and divide the value by two to determine the average deflection.

9 Reading the graphs

On the first graph read the load on the rear axle in accordance with the average deflection measured.

Refer to the second graph and read the output pressure **P2** (which corresponds to the pressure applied to each rear wheel) in accordance with the load value measured on the first graph.

WARNING: a graph is specific to a brand and type of tyre.

10 Adjusting the limiter

Follow the procedure currently described in After Sales documentation if the adjustment is incorrect.

Load on rear axle/tyre deflection
(pressure 1.5 bar)

DUNLOP 195/65 R16 SP LT30

Deflection in **mm**
Load on rear axle in **kg**

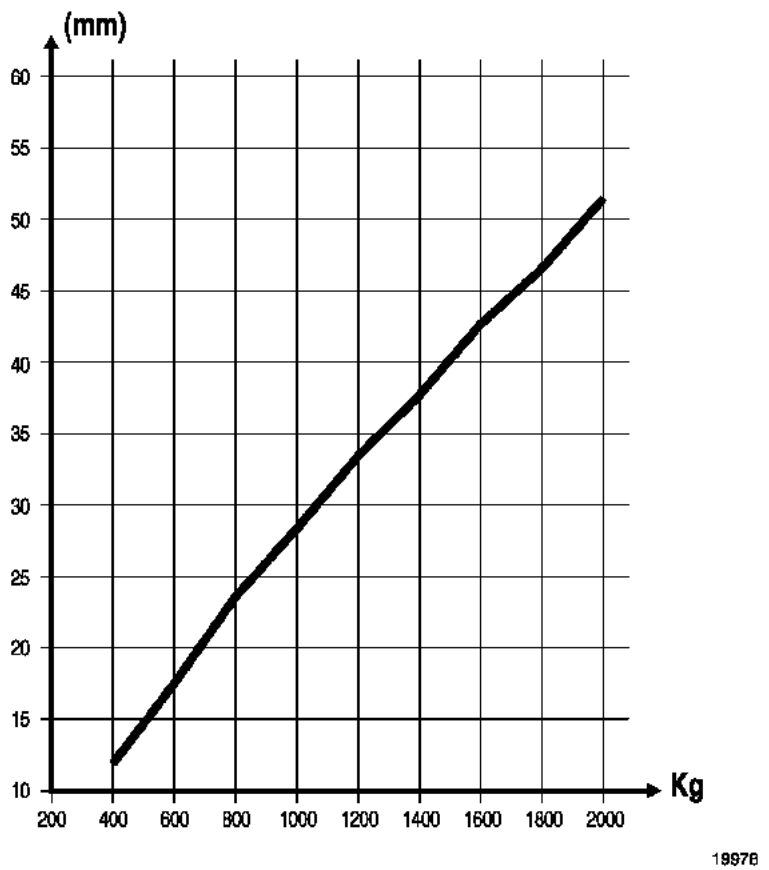

Load on rear axle/tyre deflection
(pressure 1.5 bar)

KLEBER 195/65 R16 CT 300

Deflection in **mm**
Load on rear axle in **kg**

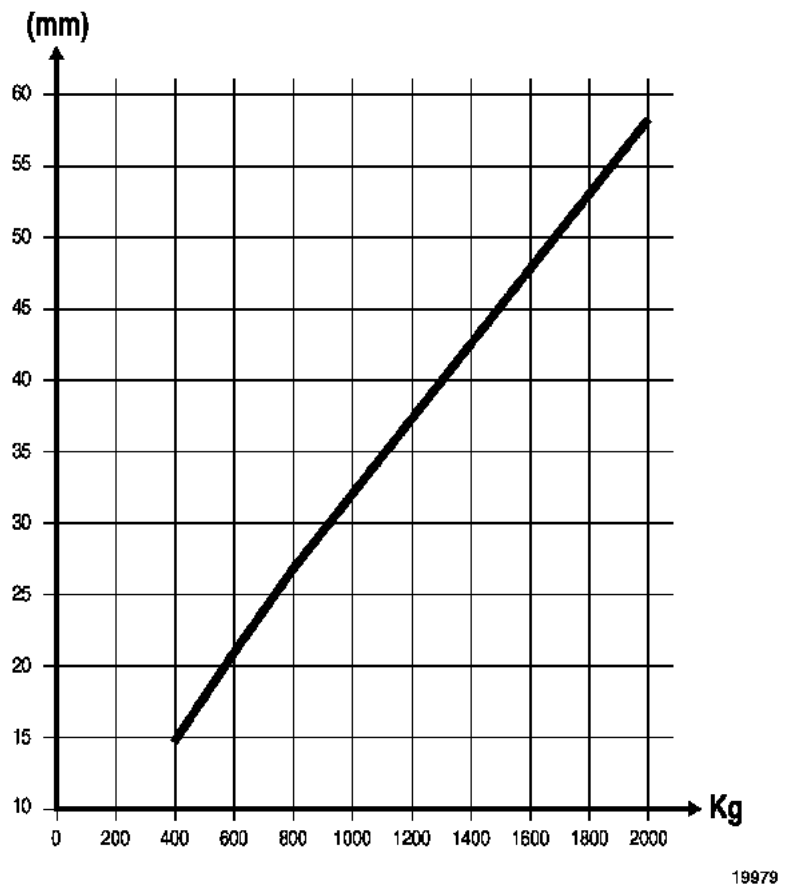

Load on rear axle/tyre deflection
(pressure 1.5 bar)

CONTINENTAL 205/75 R16 VANCO-8
for South America

Deflection in **mm**
Load on rear axle in **kg**

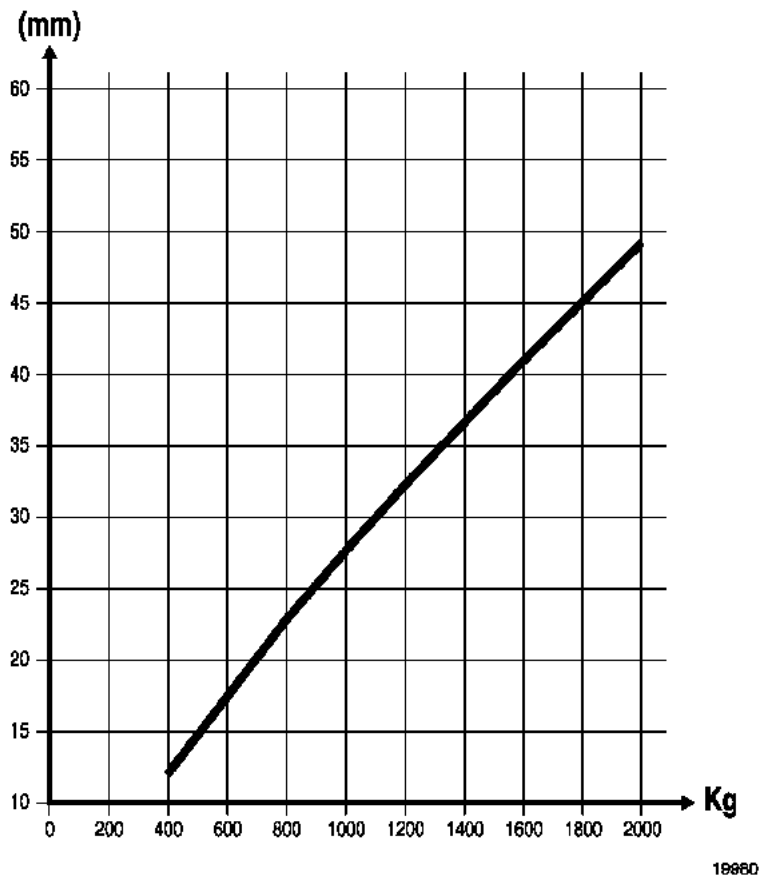

Load on rear axle/tyre deflection
(pressure 1.5 bar)

CONTINENTAL 215/65 R16 VANCO-8

Deflection in **mm**
Load on rear axle in **kg**

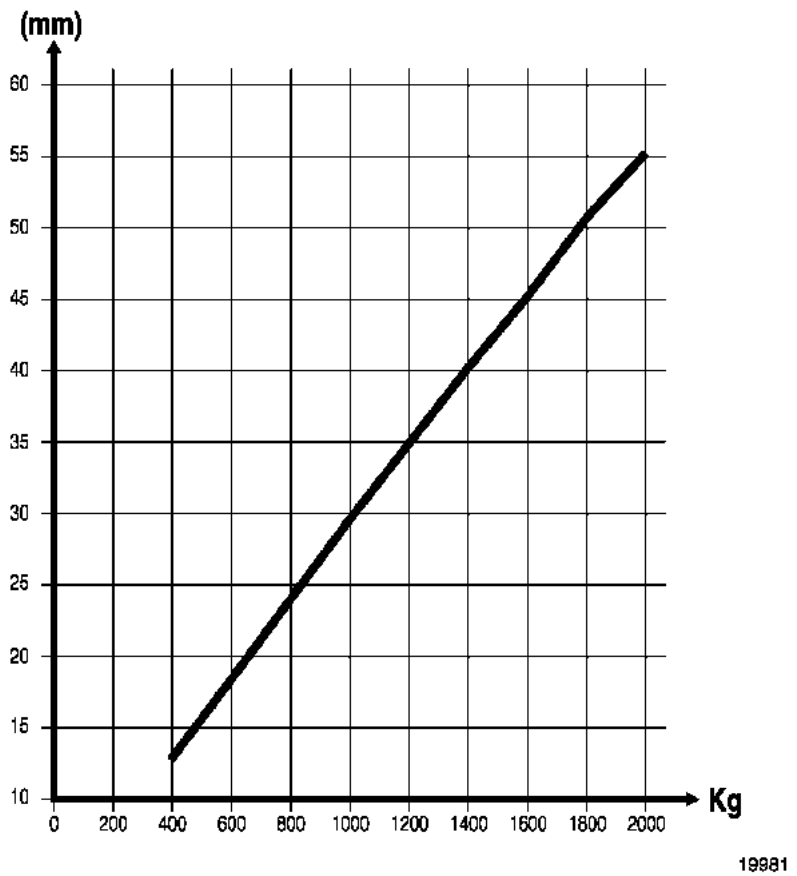

Load on rear axle/tyre deflection
(pressure 1.5 bar)

MICHELIN 215/65 R16 Agillis 81

Deflection in **mm**
Load on rear axle in **kg**

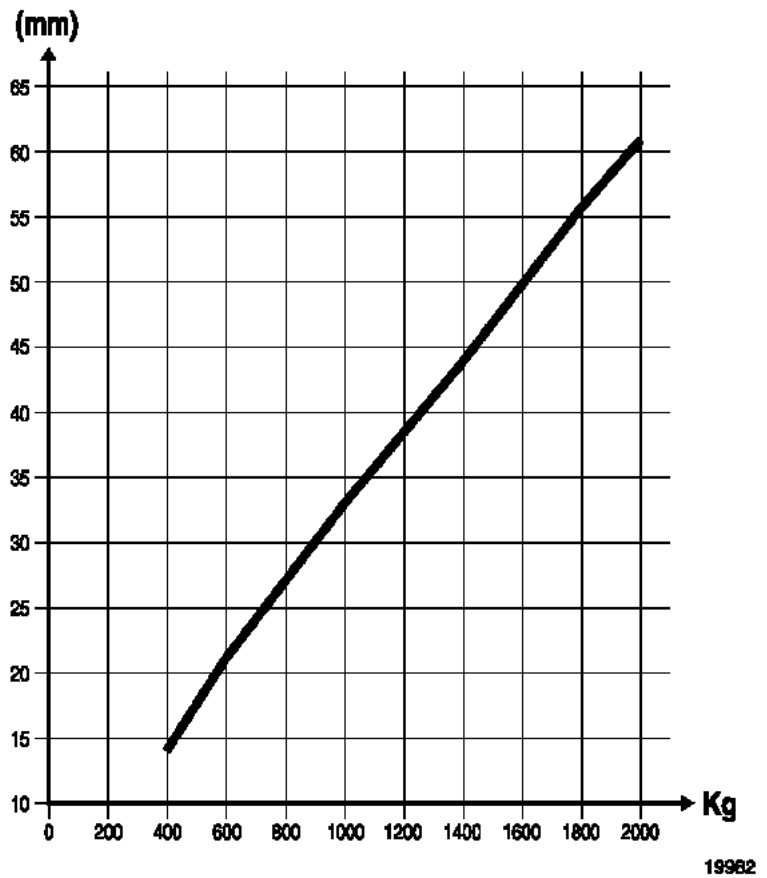

Load on rear axle/tyre deflection
(pressure 1.5 bar)

CONTINENTAL 225/65 R16 VANCO-8

Deflection in **mm**
Load on rear axle in **kg**

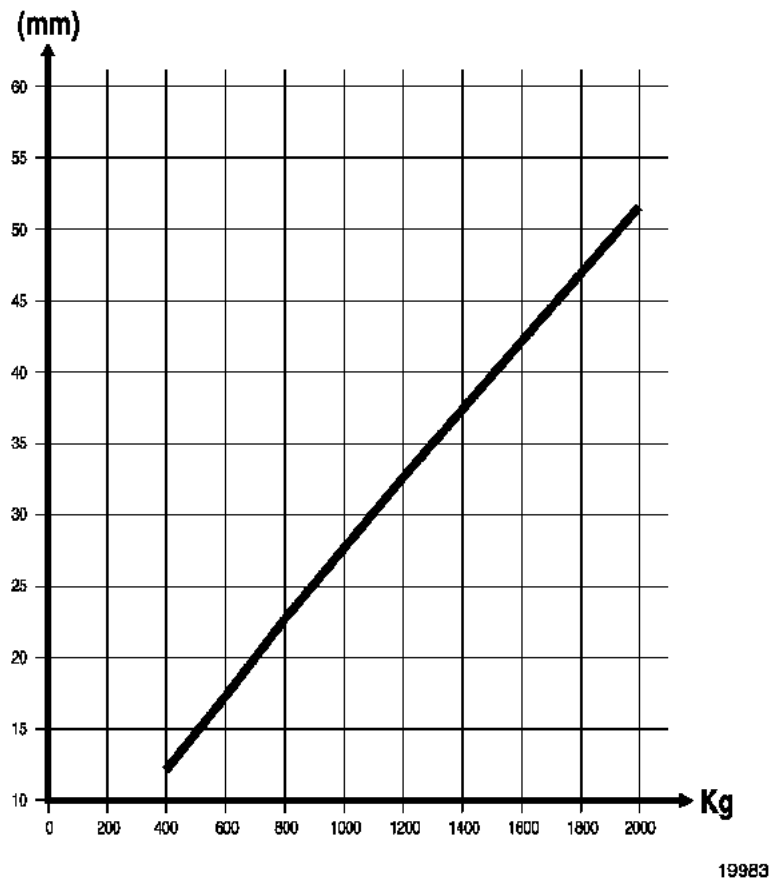

Load on rear axle/tyre deflection
(pressure 1.5 bar)

KLEBER 225/65 R16 CT 300

Deflection in **mm**
Load on rear axle in **kg**

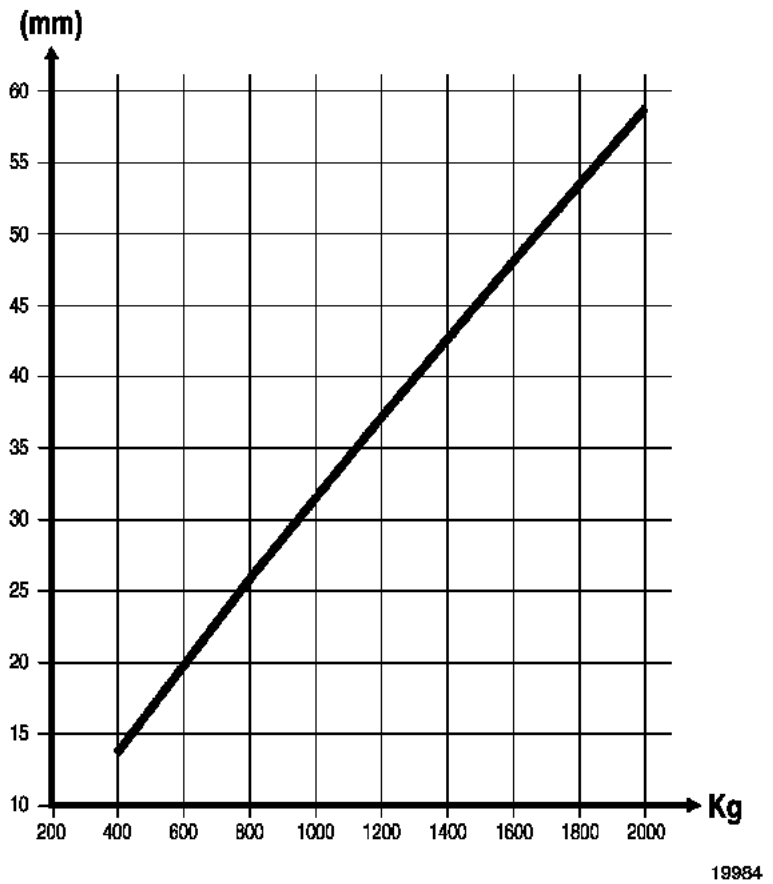

Load on rear axle/tyre deflection
(pressure 1.5 bar)

MICHELIN 225/65 R16 AGILIS 81

Deflection in **mm**
Load on rear axle in **kg**

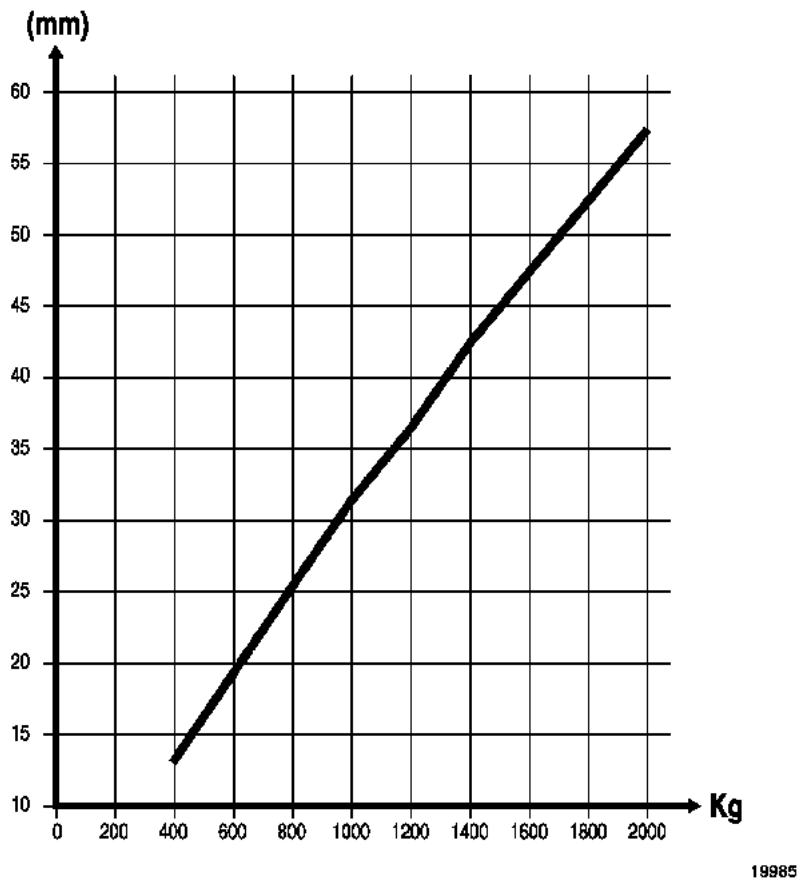

Adjustment of the limiter output pressure/ load on the rear axle

MONO-LAYER STEEL MASTER

Output pressure **P2** (in **bar**) for **100 bar** at the front
Load on rear axle in **kg**

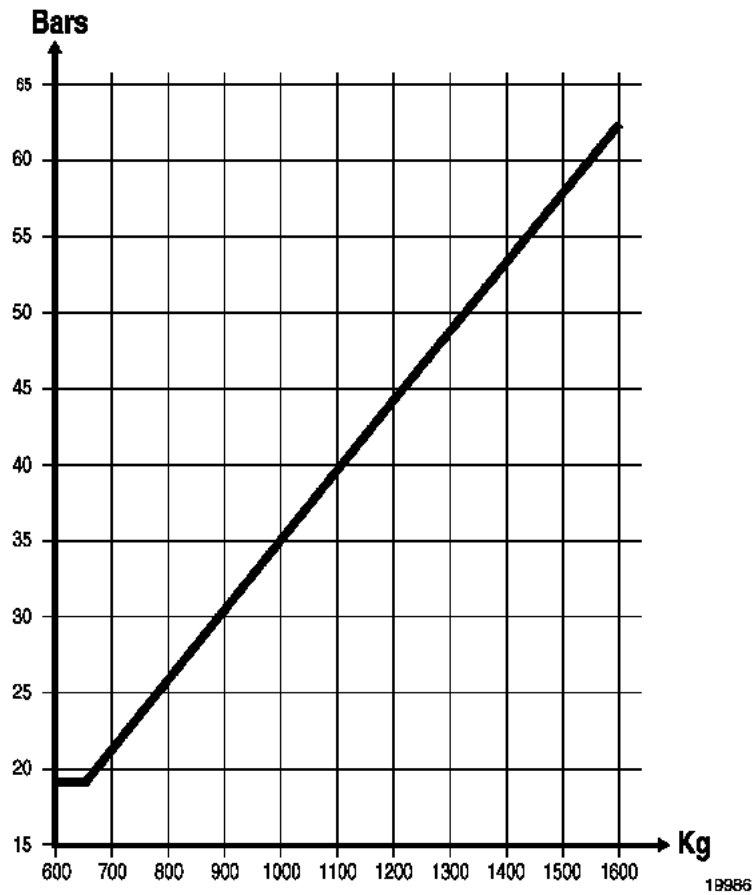

Adjustment of the limiter output pressure/ load on the rear axle

MONO-LAYER COMPOSITE MASTER (2T8 L1 and 3T5 L1)

Output pressure **P2** (in **bar**) for **100 bar** at the front
Load on rear axle in **kg**

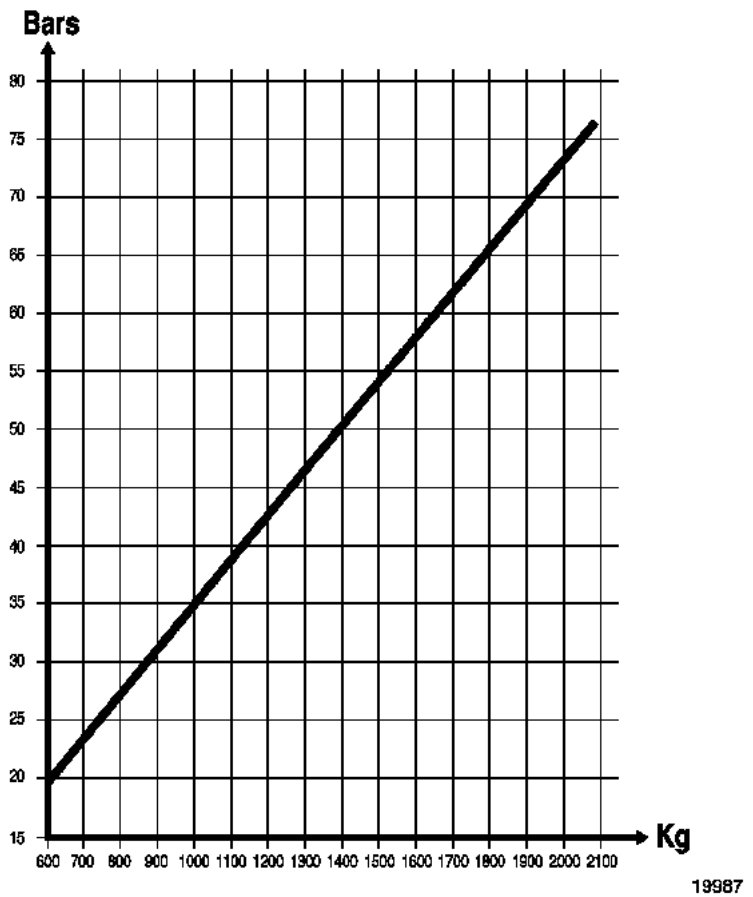

Adjustment of the limiter output pressure/ load on the rear axle

MONO-LAYER COMPOSITE MASTER (2T8 L2 and 3T5 L2, L3)

Output pressure **P2** (in **bar**) for **100 bar** at the front
Load on rear axle in **kg**

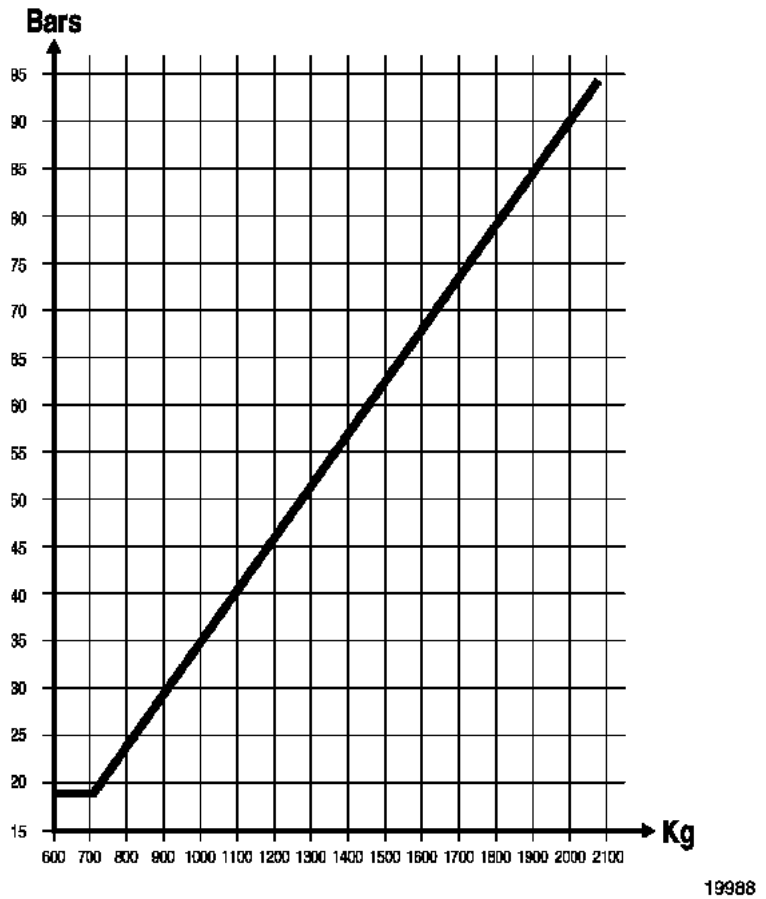

Adjustment of the limiter output pressure/ load on the rear axle

BI-LAYER STEEL MASTER (3T5 L1)

Output pressure **P2** (in **bar**) for **100 bar** at the front
Load on rear axle in **kg**

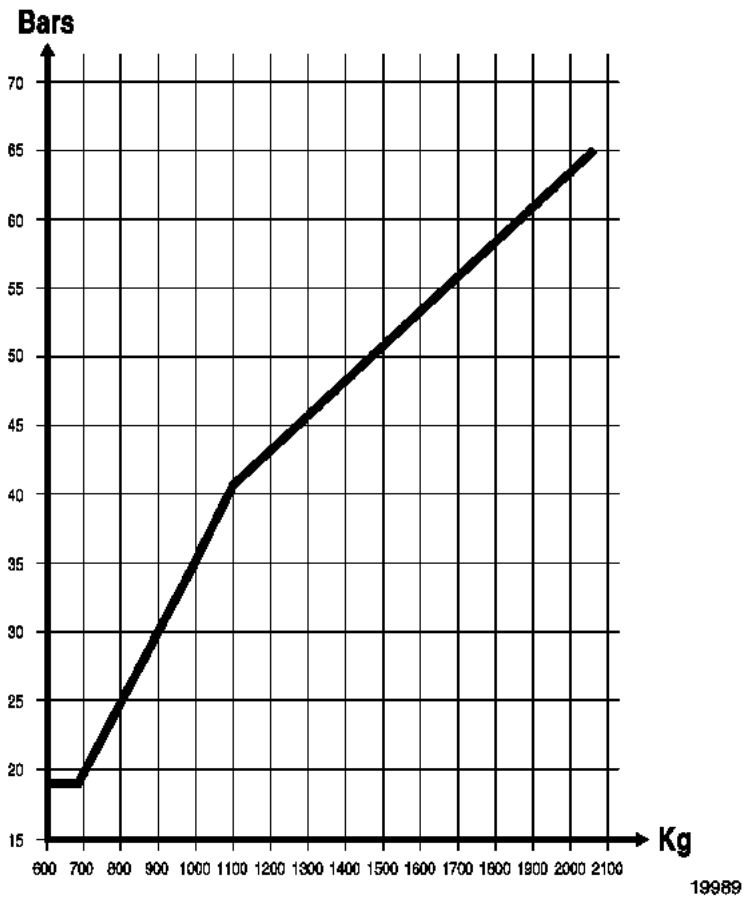

Adjustment of the limiter output pressure/ load on the rear axle

BI-LAYER STEEL MASTER (2T8 L2 and 3T5 L2, L3)

Output pressure **P2** (in **bar**) for **100 bar** at the front
Load on rear axle in **kg**

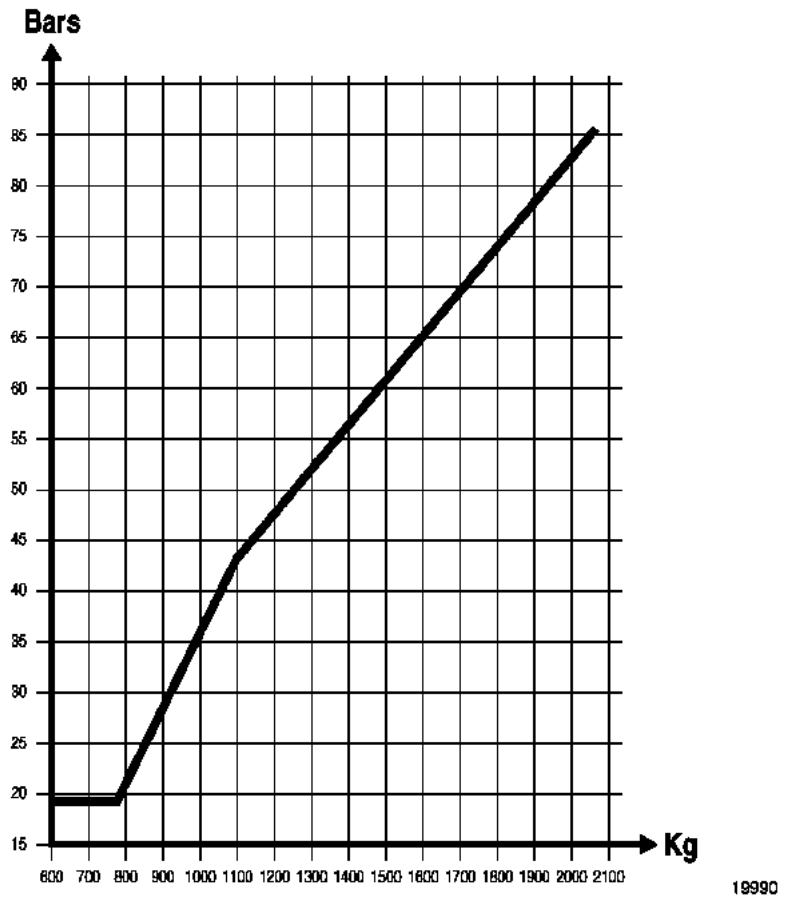

Adjustment of the limiter output pressure/ load on the rear axle

MONO-LAYER REINFORCED STEEL MASTER (3T5 L2, L3)

Output pressure **P2** (in **bar**) for **100 bar** at the front
Load on rear axle in **kg**

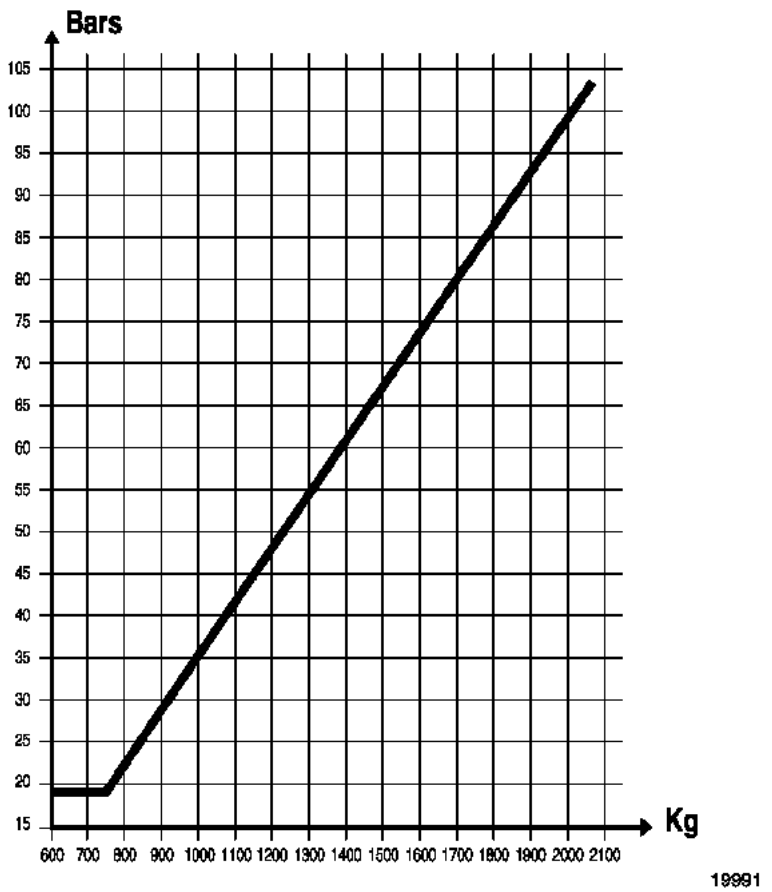

MEASUREMENT POINTS

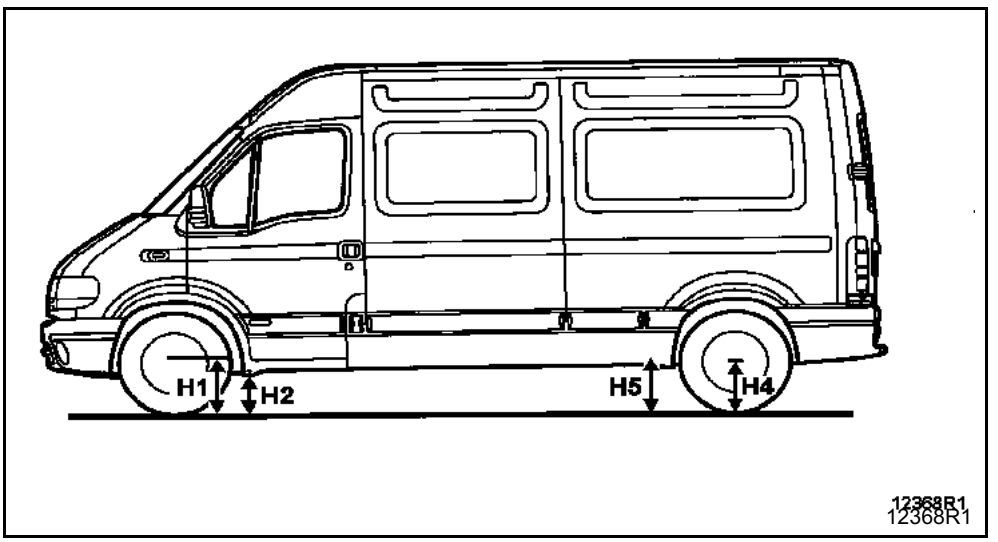

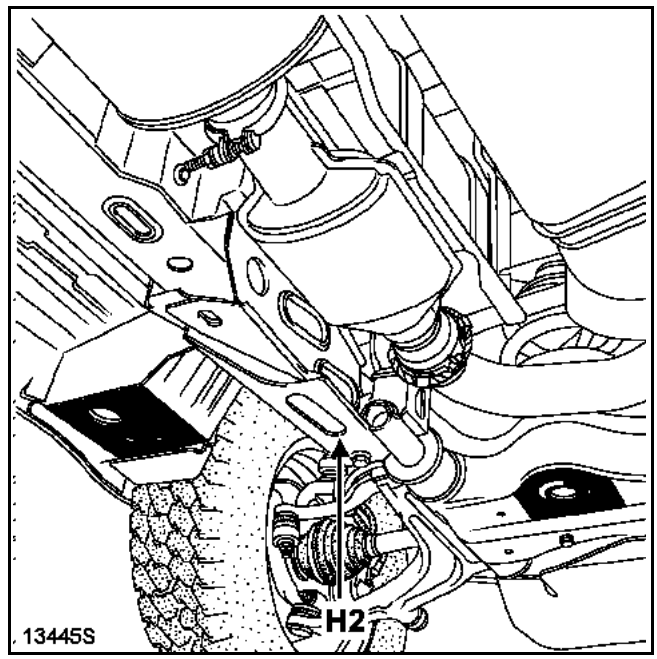

Dimension **H2** is measured close to the rear sub-frame mounting point.

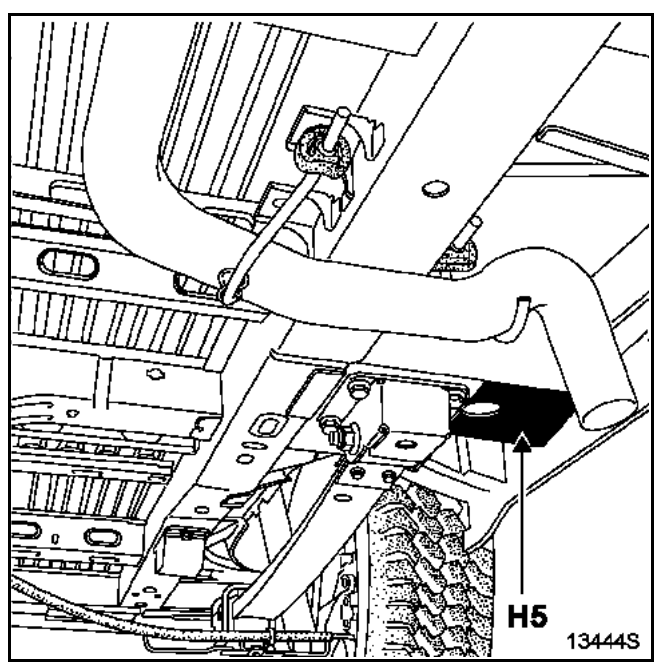

Dimension **H2** is measured on the rear hoisting mounting points.

F/G/JDXX Normal suspension
UDXX Reinforced suspension

ANGLES	VALUES	POSITION OF FRONT AXLE (mm)	ADJUSTMENT
CASTOR 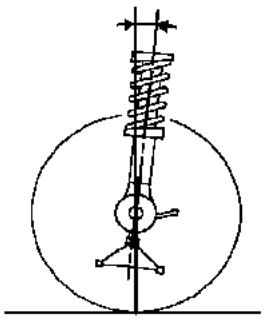 93012-1S	1˚45' ± 30' Max. right/left difference = 1˚	Unladen	Non adjustable
CAMBER 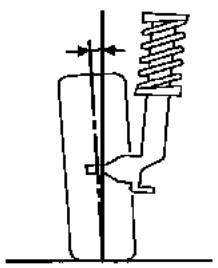 93013-1S	0°00' ± 30' Max. right/left difference = 1˚	Unladen	Non adjustable
PIVOT 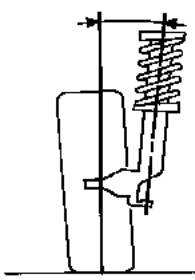 93014-1S	9°00' ± 30' Max. right/left difference = 1˚	Unladen	Non adjustable
PARALLELISM 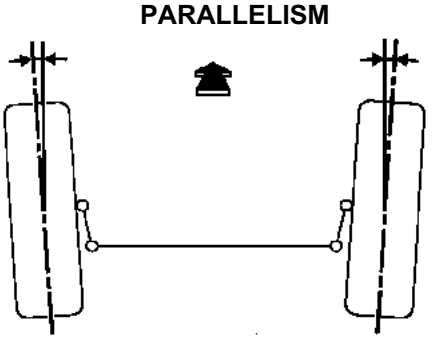 93011-1S	(For two wheels) Toe-out +0°00' + 18' + 0 mm + 1.8 mm	Unladen	Adjust using the rotating tie rod sleeves 1 turn= 30' (**3 mm)**
POSITION FOR TIGHTENING RUBBER BUSHES 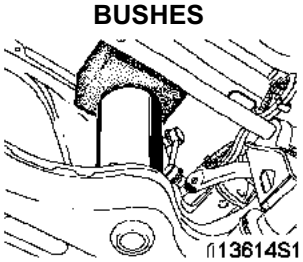 113614S1	l = 192.5 mm	Unladen	Adjust using a shim, see the method described in **Workshop Repair Manual 323**

M/NDXX Normal suspension

ANGLES	VALUES	POSITION OF FRONT AXLE (mm)	ADJUSTMENT
CASTOR 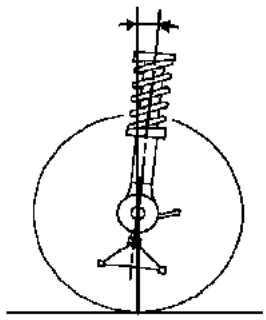 93012-1S	2˚05’ ± 30’ Max. right/left difference = 1˚	Unladen	Non adjustable
CAMBER 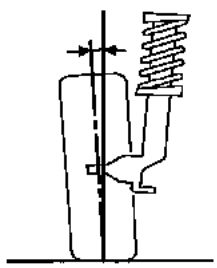 93013-1S	0°00' ± 30' Max. right/left difference = 1˚	Unladen	Non adjustable
PIVOT 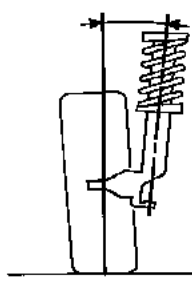 93014-1S	9°00' ± 30' Max. right/left difference = 1˚	Unladen	Non adjustable
PARALLELISM 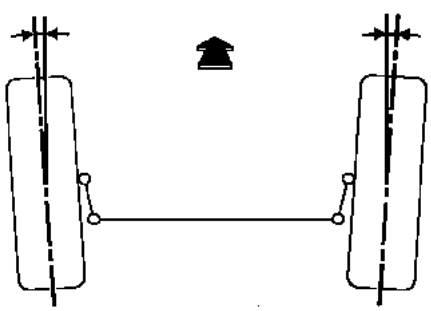 93011-1S	(For two wheels) Toe-out +0°00' + 18' + 0 mm + 1.8 mm	Unladen	Adjust using the rotating tie rod sleeves 1 turn= 30' (**3 mm)**
POSITION FOR TIGHTENING RUBBER BUSHES 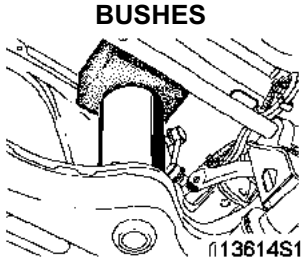 113614S1	l = 192.5 mm	Unladen	Adjust using a shim, see the method described in **Workshop Repair Manual 323**

EDXX Normal suspension/reinforced suspension (SXX engine)

ANGLES	VALUES	POSITION OF FRONT AXLE (mm)	ADJUSTMENT
CASTOR 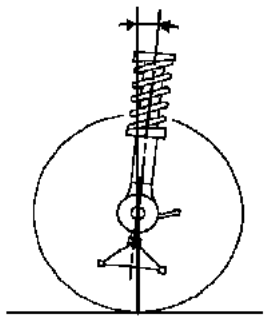 93012-1S	1˚30' ± 30' Max. right/left difference = 1˚	Unladen	Non adjustable
CAMBER 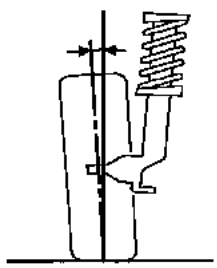 93013-1S	0°00' ± 30' Max. right/left difference = 1˚	Unladen	Non adjustable
PIVOT 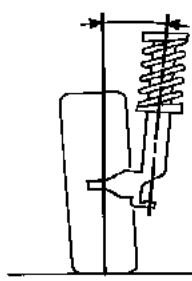 93014-1S	9°00' ± 30' Max. right/left difference = 1˚	Unladen	Non adjustable
PARALLELISM 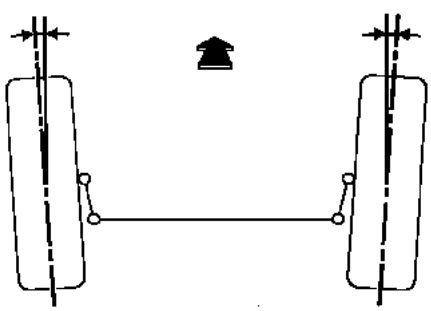 93011-1S	(For two wheels) Toe-out +0°00' + 18' + 0 mm + 1.8 mm	Unladen	Adjust using the rotating tie rod sleeves 1 turn= 30' (**3 mm)**
POSITION FOR TIGHTENING RUBBER BUSHES 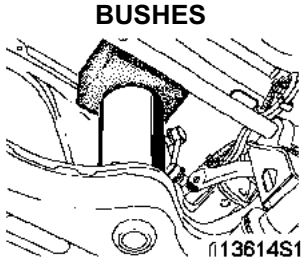 113614S1	l = 192.5 mm	Unladen	Adjust using a shim, see the method described in **Workshop Repair Manual 323**

EDXX Normal suspension/reinforced suspension (GXX engine)

ANGLES	VALUES	POSITION OF FRONT AXLE (mm)	ADJUSTMENT
CASTOR 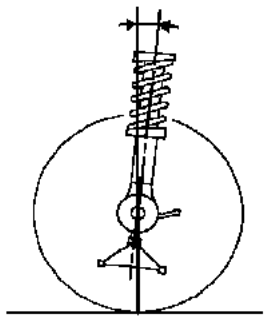 93012-1S	1˚40' ± 30' Max. right/left difference = 1˚	Unladen	Non adjustable
CAMBER 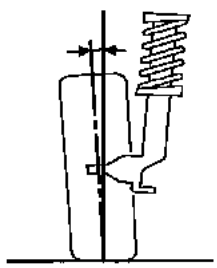 93013-1S	0°00' ± 30' Max. right/left difference = 1˚	Unladen	Non adjustable
PIVOT 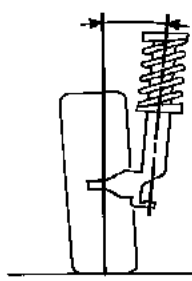 93014-1S	9°00' ± 30' Max. right/left difference = 1˚	Unladen	Non adjustable
PARALLELISM 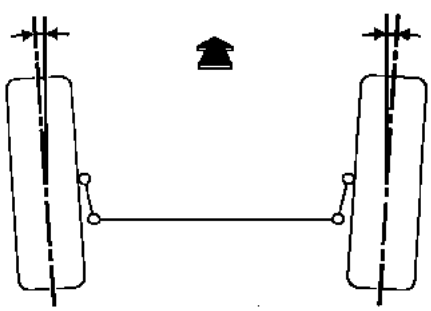 93011-1S	(For two wheels) Toe-out +0°00' + 18' + 0 mm + 1.8 mm	Unladen	Adjust using the rotating tie rod sleeves 1 turn= 30' (**3 mm)**
POSITION FOR TIGHTENING RUBBER BUSHES 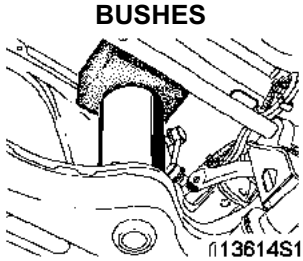 113614S1	l = 192.5 mm	Unladen	Adjust using a shim, see the method described in **Workshop Repair Manual 323**

F/G/D/HDXX Reinforced suspension

ANGLES	VALUES	POSITION OF FRONT AXLE (mm)	ADJUSTMENT
CASTOR 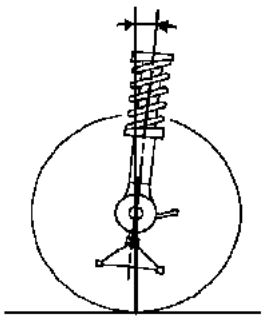 93012-1S	2˚00' ± 30' Max. right/left difference = 1˚	Unladen	Non adjustable
CAMBER 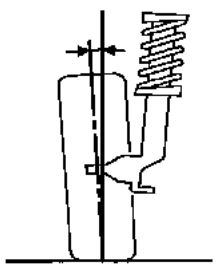 93013-1S	0°00' ± 30' Max. right/left difference = 1˚	Unladen	Non adjustable
PIVOT 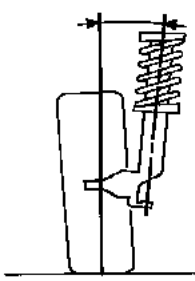 93014-1S	9°00' ± 30' Max. right/left difference = 1˚	Unladen	Non adjustable
PARALLELISM 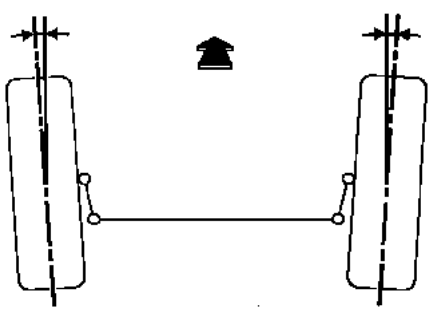 93011-1S	(For two wheels) Toe-out +0°00' + 18' + 0 mm + 1.8 mm	Unladen	Adjust using the rotating tie rod sleeves 1 turn= 30' (**3 mm)**
POSITION FOR TIGHTENING RUBBER BUSHES 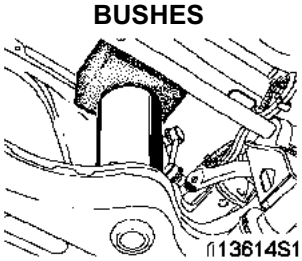 113614S1	l = 192.5 mm	Unladen	Adjust using a shim, see the method described in **Workshop Repair Manual 323**

JDXX Reinforced suspension

ANGLES	VALUES	POSITION OF FRONT AXLE (mm)	ADJUSTMENT
CASTOR 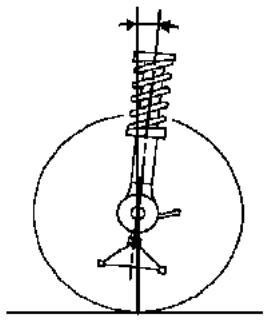 93012-1S	1˚50' ± 30' Max. right/left difference = 1˚	Unladen	Non adjustable
CAMBER 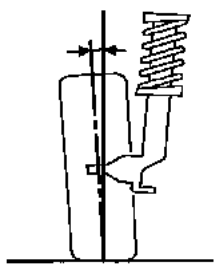 93013-1S	0°00' ± 30' Max. right/left difference = 1˚	Unladen	Non adjustable
PIVOT 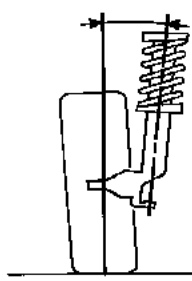 93014-1S	9°00' ± 30' Max. right/left difference = 1˚	Unladen	Non adjustable
PARALLELISM 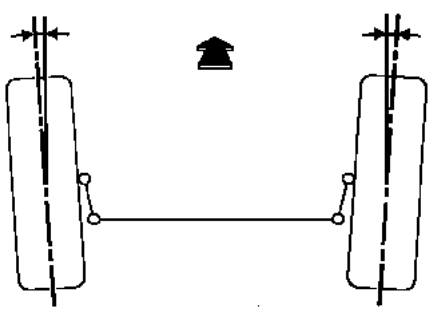 93011-1S	(For two wheels) Toe-out +0°00' + 18' + 0 mm + 1.8 mm	Unladen	Adjust using the rotating tie rod sleeves 1 turn= 30' (**3 mm)**
POSITION FOR TIGHTENING RUBBER BUSHES 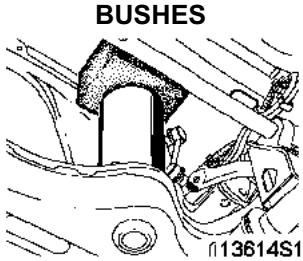 113614S1	l = 192.5 mm	Unladen	Adjust using a shim, see the method described in **Workshop Repair Manual 323**

XDXX Pneumatic suspension

ANGLES	VALUES	POSITION OF FRONT AXLE (mm)	ADJUSTMENT
CASTOR 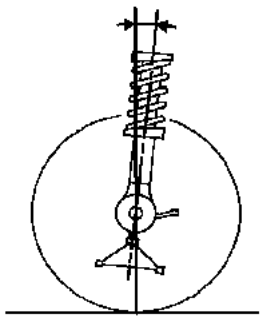 93012-1S	3˚00' ± 30' Max. right/left difference = 1˚	H4 - H5 = 0	Non adjustable
CAMBER 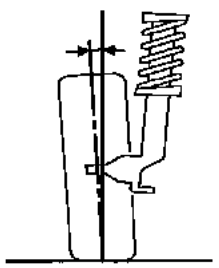 93013-1S	0°00' ± 30' Max. right/left difference = 1˚	H4 - H5 = 0	Non adjustable
PIVOT 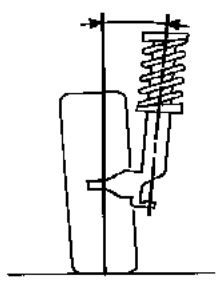 93014-1S	9°00' ± 30' Max. right/left difference = 1˚	H4 - H5 = 0	Non adjustable
PARALLELISM 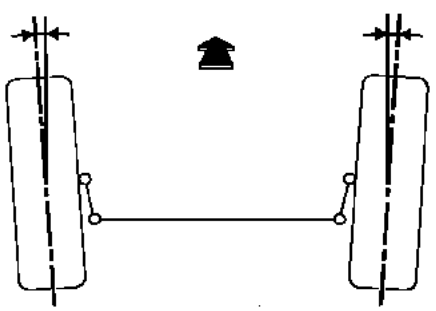 93011-1S	(For two wheels) Toe-out +0°00' + 18' + 0 mm + 1.8 mm	H4 - H5 = 0	Adjust using the rotating tie rod sleeves 1 turn= 30' (**3 mm)**
POSITION FOR TIGHTENING RUBBER BUSHES 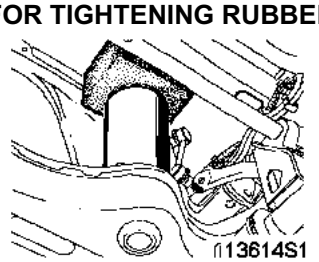 113614S1	I = 192.5 mm	Unladen	Adjust using a shim, see the method described in **Workshop Repair Manual 323**

ANGLES	VALUES	POSITION OF REAR AXLE (mm)	ADJUSTMENT
CAMBER 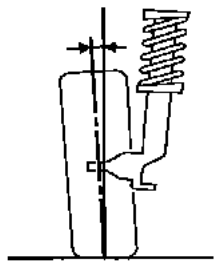 93013-1S	-0˚14' ± 14'	H4 - H5 = 0	Non adjustable
PARALLELISM 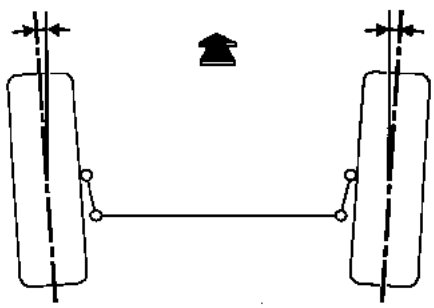 93011-1S	(For two wheels) Toe-in -30’ ± 20’ -3 mm ± 2 mm	H4 - H5 = 0	Non adjustable
POSITION FOR TIGHTENING RUBBER BUSHES 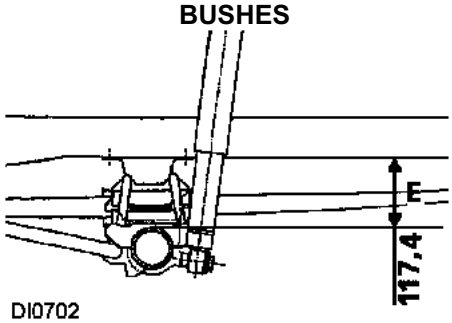 DI0702	E = 117.4 mm	–	Adjust using a tool, see the method described in **Workshop Repair Manual 323**

Type | S/Section

RENAULT All Types

XXX X | 35

This note is a supplement to Technical Note No. 3340A dated NOVEMBER 1999.
Modifications: Additional information.

35 APPROVED TYRES FOR 2001 MODELS

- Engine: **XXX**
- Gearbox: **XXX**

TABLE OF APPROVED TYRES FOR 2001 MODELS

SEE OVER

– Reminder of fitting instructions:

* If the tyre has a **Red Dot** on the flank, fit the tyre with this to the outside.

* If the tyre does not have a **Red Dot**, fit the tyre with the **DOT** marker to the outside.

– We would like to remind you that it is **VITAL** to check the tyre pressure when preparing new vehicles. In fact, the tyres are overinflated to between **2.5** and **3 bar** in the factory.

"The repair methods given by the manufacturer in this document are based on the technical specifications current when it was prepared.

The methods may be modified as a result of changes introduced by the manufacturer in the production of the various component units and accessories from which his vehicles are constructed."

All copyrights reserved by Renault.

Copying or translating, in part or in full, of this document or use of the service part reference numbering system is forbidden without the prior written authority of Renault.

© RENAULT 2001

TYRES APPROVED FOR 2001 MODEL VEHICLES

VEHICLES	DIMENSIONS	CONTINENTAL	DUNLOP	GOODYEAR	KLEBER	MICHELIN	PIRELLI	VARIOUS Firestone Uniroyal
EXTRA	145/70 R 13 S					MXL		
	155 R 13 S		SP ELITE		C1	MXL	P4	**F**: S211 **U**: RAL280
	155/70 R 13 S			G PR S	C2	MXL		**F**: S21MFU
	155/70 R 13 T	CT21	SP6				P2000	**U**: RAL380
	165/65 R 13 S					MXL		
	165/70 R 13 T	CT21	SP6			MXL	P2000	
KANGOO	165/70 R 13			*				
	165/70 R 13 C		SP9C		CT100	AGILIS 61		
	165/70 R 14	ECO CTC 6204				AGILIS 41		
	165/70 R 14 C	VANCO 6211				AGILIS 51		
TWINGO	145/80 R 13				C801S	MXTE		
	145/80 R 13 S		SP9					
	145/80 R 13 T	CEC/EP						
	155/70 R 13 T				C701TK	XT1		
CLIO	155/80 R 13 T						P1000	
	165/65 R 14 T	CEC/EP				XT1 TL		
	165/70 R 13 T	CEC/EP	SP10 3E			ENERGY XT1 TL		
	175/60 R 14 T					79T ENERGY XT2		
	175/65 R 14 T	CEC/EP	SP10 3E TL					
	185/55 R 15 H					XH1		
	185/60 R 14 H					MXV3-A ENERGY		
MEGANE	165/70 R 13 T				C701T 165/70	ENERGY MXT		**F**: 580
	175/65 R 14 T	CEC/EP				XT 1		
	175/70 R 13 T			GT 2E		ENERGY MXT		
	175/70 R 14 T			GT2			84 P2000	
	185/55 R 15 H					XH1		
	185/55 R 15 V		SP2000					
	185/60 R 15 H	ECO/CP		NCT 3		XH1		
	185/65 R 14 T		SP10 3E TL	*		MXT		
	185/65 R 15 T	CEC/EP	SP10 3E TL					
	185/70 R 14 T	CEC/EP	SP9					
	195/50 R 16 V					SXGT	P6000	
LAGUNA I	185/65 R 14 H	CH90				MXV3-A	P4000	
	185/65 R 14 T	CT22	SP9			ENERGY MXT	P2000	
	195/65 R 15 H					ENERGY MXV3-A		
	195/65 R 14 T					MXT ENERGY		
	195/65 R 15 T					MXT2		
	205/60 R 15 H				C601H			
	205/60 R 15 V					MXV3-A		
LAGUNA II	195/65 R 15 H					ENERGY XH1 TL		
	205/55 R 16 V	PREMIUM CONTACT				PILOT PRIMACY G1 TL		
	225/45 R 17 V	CONTI SPORT CONTACT						

***: MERCOS**

TYRES APPROVED FOR VEHICLE MODEL 2001

VEHICLES	DIMENSIONS	CONTINENTAL	DUNLOP	GOODYEAR	KLEBER	MICHELIN	PIRELLI	VARIOUS Firestone Uniroyal
SAFRANE	195/60 R 15 H					MXV3A		
	195/60 R 15 V	CV 90				MXV2		
	195/65 R 15 H	ECO CP	SP220E	NCT3	C651H	ENERGY MXV3-A		
	195/65 R 15 V			NCT2		HX MXV3-A		
	205/60 R 15 V						P4000	
ESPACE	195/65 R 15 91 T				C651T	MXT		
	205/65 R 15 94 T					XT2		
	215/55 R 16 95 V					PRIMACY		
	225/55 R 16 95 V					PRIMACY		
TRAFIC	195/65 R 16 C			CARGO G 26				
	205/65 R 16 C			CARGO G 26				
	215/45 R 16 C			CARGO G 26				
MASTER	195/70 R 15		E110960		CT200R F111548	29237GA		
	215/70 R 15					AGILIS 215/R15Q		

	Type	S/Section
All Types	**XXX X**	**01B**

01E COMPUTER PROGRAMMING AND REPROGRAMMING PROCEDURE

- Engine: **XXX**
- Gearbox: **XXX**

Basic manual:
All computer reprogramming Technical Notes

This Technical Note relates to onboard computer Programming and Reprogramming operations of using a RENAULT.NET connection or a Reprogramming CD (Part No: **77 11 298 859**).

"The repair procedures given by the manufacturer in this document are based on the technical specifications current when it was prepared.

The procedures may be modified as a result of changes introduced by the manufacturer in the production of the various component units and accessories from which his vehicles are constructed".

All rights are reserved by **RENAULT s.a.s.**

Copying or translating, in part or in full, of this document or use of the service part reference numbering system is forbidden without the prior written authority of **RENAULT s.a.s.**

© Renault s.a.s. 2005

CONTENTS

Page

GENERAL INFORMATION....2
Tooling required....2
Programming....3
Reprogramming....3

OPERATING PROCEDURE (Programming and reprogramming a computer)....4
Preparing the RENAULT CLIP diagnostic tool....4
Preparing the vehicle....4
Programming - reprogramming phase....5
Returning the vehicle....5
CLIP screens depending on programming - reprogramming step....6
Order of the screens....7

CLIP SCREEN ERROR MESSAGES AND PROCEDURE TO FOLLOW....9

CODE SERVER PROCEDURE (in CD mode only)....12

EMERGENCY PROCEDURE....13

CONSULTING THE COMPUTER IDENTIFICATION FRAME....14

CONSULTING THE COMPUTER'S HISTORY....14

CONSULTING THE DIAGNOSTIC TOOL LOG....15

SPY FILE (upon the request of Techline)....16
Creating the spy file....16
Recovering the spy file after programming - reprogramming....16

GENERAL INFORMATION

Two types of operation can be carried out in After-Sales, either *programming* or *reprogramming* of the computer. These operations apply to all vehicles and all types of (re)programmable computer (e.g: Injection, Gearbox, Air conditioning, Instrument panel, Parking brake, UCH).

The two types of operation are carried out with the RENAULT CLIP diagnostic tool using either RENAULT.NET, or the Programming - Reprogramming CD Part No. 77 11 298 859.

The reprogramming data available via RENAULT.NET is always more up to date than that available on the CD (Part No. 77 11 298 859).

The CD is edited and distributed every month in the same way as the diagnostic tools update.
Each CD cancels and replaces the previous one.

Tooling required

- CLIP with the most recent update.
- 1 connection to RENAULT.NET (requires a CLIP with a RF kit and a RENAULT.NET certificate)
  or
  1 reprogramming CD, Part No. 77 11 298 859 from the current month.
- 1 RENAULT approved battery charger.
- The FAULT FINDING REPAIR MANUAL relevant to the vehicle and the system to be (re)programmed.
- 1 RENAULT.NET connection to the NRE reprogramming codes server for each programming - reprogramming with a reprogramming CD. See **CODES SERVER PROCEDURE**.

Programming

The operation consists of downloading the calibration using the RENAULT CLIP diagnostic tool.

It affects computers supplied *non operational* (also known as blank) by the Parts Department for all vehicles in the RENAULT range, but only for certain types of computer.

The types of computers which are currently programmable are the engine management computer (Petrol, Diesel and LPG Injection) and the automatic and mechanical gearbox computers.

When To Program:

The operation is carried out as part of a computer replacement operation.
The *non operational* status of the computer, supplied by the Parts Department, is specified in DIALOGYS by the display of the message:

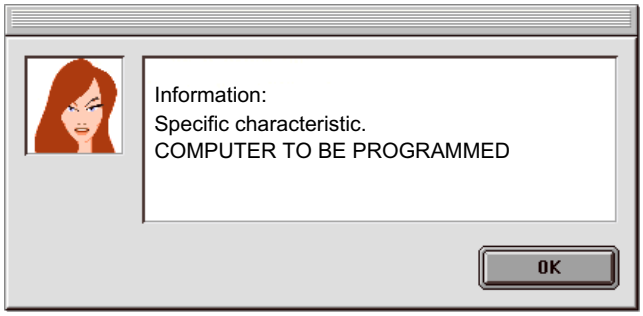

Reprogramming

The operation consists of exchanging the software and/or calibration for the most recent version using the RENAULT CLIP diagnostic tool.

It relates to computers already fitted in the vehicle as well as computers supplied *operational* (also called "full". E.g: Air conditioning) by the Parts Department, for the entire RENAULT range.

It enables systematic replacement of the computer to be avoided.

After having filled in the vehicle's VIN in the main menu, the types of (re)programmable computer are displayed in the RENAULT CLIP diagnostic tool REPROGRAMMING menu.

When To Reprogram:

The operation is carried out within the framework of:
- an OTS, or a Technical Note arising from a fault resulting from an After-Sales problem, or a functional improvement.
- RENAULT Technical Directives or following a request from the Techline.

OPERATING PROCEDURE (Programming and reprogramming a computer)

The operating procedure for Programming and Reprogramming operations is identical.

The operation is carried out using the RENAULT CLIP diagnostic tool, either connected to RENAULT.NETor with the reprogramming CD.

IMPORTANT
To prevent any computer malfunctioning or locking, the following operations **must be carried out** before (re)programming.

Preparing the RENAULT CLIP diagnostic tool

- Always use the latest available version of the CLIP update.
- Always use the RENAULT.NET connection if available, in preference to the CD.

The reprogramming data available via RENAULT.NET is always more up to date than that available on the CD.

- Whenever the CD mode is being used for programming - reprogramming, always use the latest available version of the CD.
- **Connect CLIP to the mains.**
- Set the RENAULT CLIP diagnostic tool Windows monitor screen locking delay to NONE or 60 minutes minimum.

  Setting the RENAULT CLIP diagnostic tool Windows monitor screen locking delay:
  In the RENAULT CLIP diagnostic tool Windows system:
  – Right click on the mouse and select **Properties**.
  – In the new **Display Properties** window, select the **Monitor screen** tab.
  Then position the monitor screen on (**None**) or set the **Wait** time delay to a minimum of 60 minutes.
  – Confirm and close the display windows.

Preparing the vehicle

- **Connect an approved battery charger** to the vehicle.
- Switch off all the vehicle's electrical consumers (Lights, Interior lighting, Air conditioning, CD Radio, etc).
- Switch on the ignition.

Programming - reprogramming phase

- **Enter the vehicle's VIN** in the RENAULT CLIP diagnostic tool main menu.

IMPORTANT
Using a VIN which is not allocated to the vehicle risks compromising the smooth running of the programming - reprogramming operation, as well as the conformity of the vehicle.

Consult the instructions described in REPROGRAMMING OPERATIONS in the FAULT FINDING REPAIR MANUAL, FAULT FINDING - COMPONENT REPLACEMENT for the vehicle and the system to be reprogrammed.

- Find the Parts Department reference number for the computer to be reprogrammed (see **CONSULTING THE COMPUTER IDENTIFICATION FRAME**), necessary in the event of an **EMERGENCY PROCEDURE**.

- During any programming and reprogramming:

IMPORTANT
DO NOT WORK ON THE VEHICLE OR OPERATE THE DIAGNOSTIC TOOL.

In the CD mode only, enter a reprogramming code: see **CODE SERVER PROCEDURE**.

- At the end of programming and reprogramming, respect the following instructions:

IMPORTANT
TO FINISH THE REPROGRAMMING, ALWAYS CARRY OUT THE FOLLOWING OPERATIONS:
- **Consult the instructions** described in REPROGRAMMING OPERATIONS in the FAULT FINDING REPAIR MANUAL, FAULT FINDING - COMPONENT REPLACEMENT for the vehicle and the system to be reprogrammed.
- **Enter the VIN** into the computer.
- **Always deal with faults in all computers** (when a computer is being reprogrammed, it cannot transmit data to the multiplex network. As a result, faults will be generated in other computers connected to the multiplex network).

- Proceed to the WARRANTY SCREEN by pressing the NEXT button.
  Note the CODECAL and the SUPPLIER CODE and transfer them to the Repair Order.

  If the CODECAL and the SUPPLIER CODE are lost, they can be recovered: see **CONSULTING THE TOOL LOG**.

Returning the vehicle

- Test all the computers and **deal with any faults present**.
- Check that all the vehicle's current systems are correctly configured.

CLIP screens depending on programming - reprogramming step

Screen	Step		Commentary
01	CLIP home		CLIP determines, via the VIN, the Technical Specification of the vehicle. **IMPORTANT** To ensure that reprogramming is carried out effectively, enter the correct VIN for the vehicle (17 characters).
01	Reprog home		Select REPROGRAMMING and the system to (re)program.
02	Choice of computer		CLIP identifies the computer concerned and recovers the technical data necessary for the (re)programming operation.
03	Connecting		
04	Entering and confirming repair order/ Entering Vehicle Technical Specification		Enter the After-Sales information necessary for the warranty. **IMPORTANT** Enter the repair order if it has not been written in the main menu. The "*Vehicle Technical Specification*" field is to be filled in at the request of Techline or if required by a reprogramming Technical Note.
05	Pre-reprogramming Message		Description of the environment to be set up before any reprogramming. **IMPORTANT** Adhere to the instructions which can differ from one computer or vehicle to the next.
06	Checking battery voltage		CLIP automatically checks the voltage level necessary for the correct running of the re-programming operation.
07	Select the reprogramming mode		Choose the technical resource: either RENAULT.NET or CD.
08	Finding the file(s)	**RENAULT.NET**	CLIP finds the technical data to download to the computer. In RENAULT.NET mode, a password is needed for authentication.
		CD	
09	File selection		Confirm the operation by selecting the "*Software reference*" to download.
10	Enter the reprogramming code in CD mode. See **CODE SERVER PROCEDURE**		**In CD mode only:** • CLIP provides a *"reprogramming code".* • Provide the code management server with the *reprogramming code* and the VIN. • The server issues an "*After-Sales reprogramming code*". • Enter this code in CLIP.
11	File downloading		CLIP downloads the technical data to the computer.
12	Post-reprogramming Message		Description of the actions to carry out to finish the reprogramming operation and return the conforming vehicle. **IMPORTANT** Adhere to the instructions which can differ from one computer or vehicle to the next.
13	Warranty screen		CLIP provides the warranty screen describing the operation performed and the CODECAL necessary for the Warranty procedure.

Order of the screens

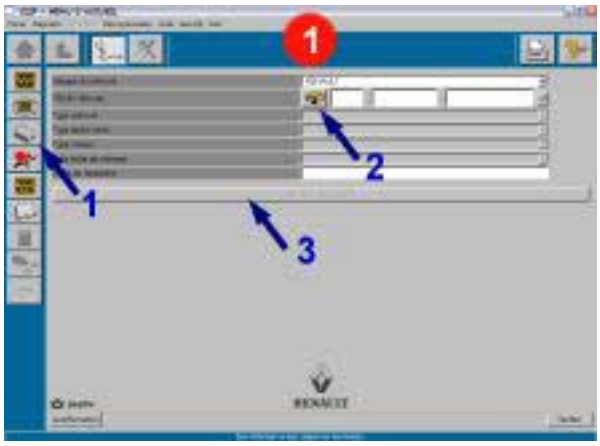

1: Select the reprogramming page.
2: Obtain the VIN of the vehicle automatically.
3: Select the reprogramming button.

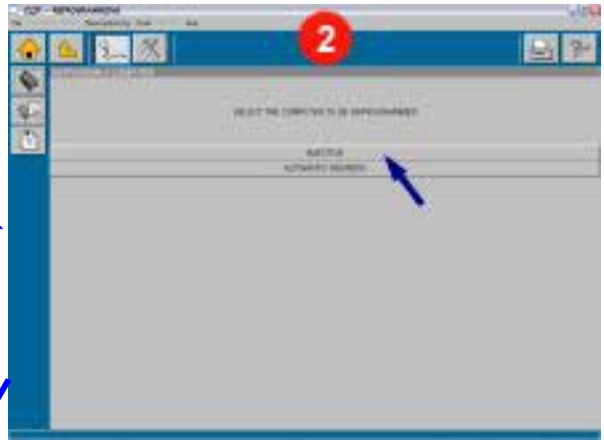

Select the system to be reprogrammed.

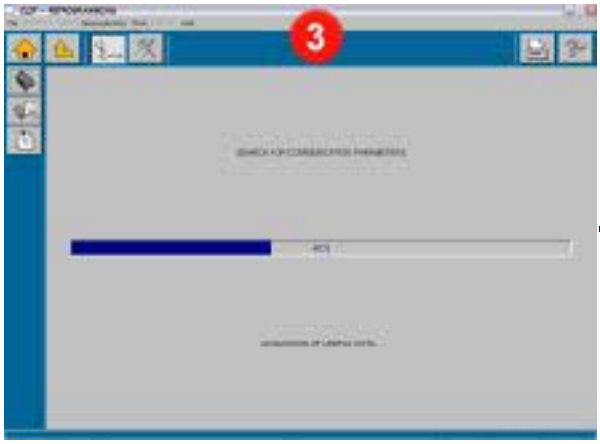

Automatic identification of computer.

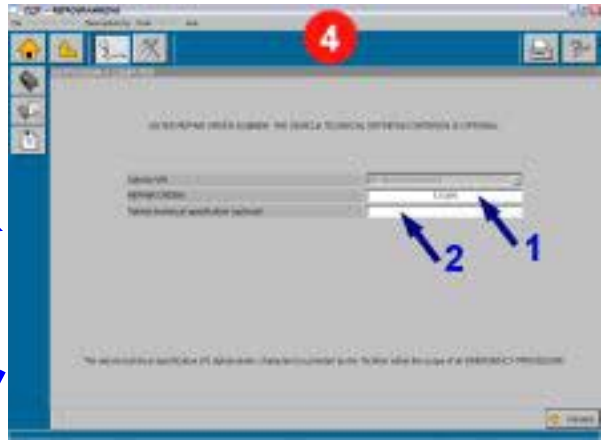

1: Enter the Repair Order Number.
2: Enter the *Vehicle Technical Specification* code if requested.

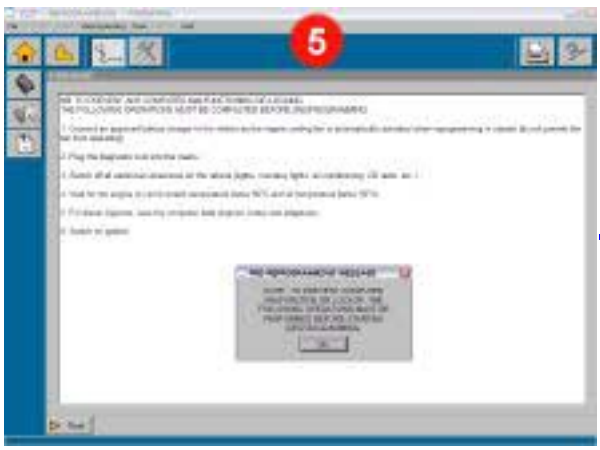

IMPORTANT: Adhere to the instructions.

Automatic battery voltage check.

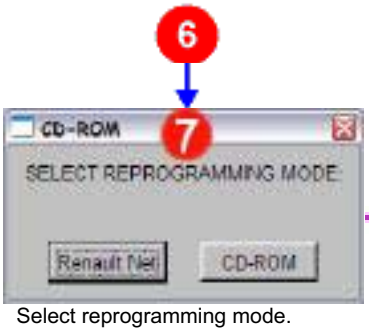

Select reprogramming mode.

RENAULT.NET

Enter the RENAULT.NET password.

CD-ROM

Software reference search.

RENAULT.NET

Select the Software reference.

CD-ROM

CD-ROM

Enter the reprogramming code.
(**CODE SERVER PROCEDURE**)

RENAULT.NET

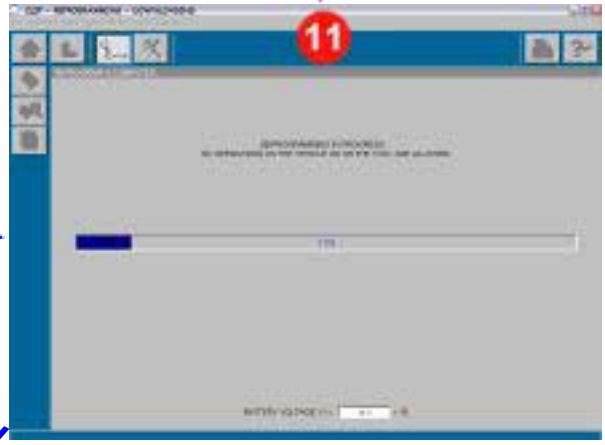

File download.

CD-ROM

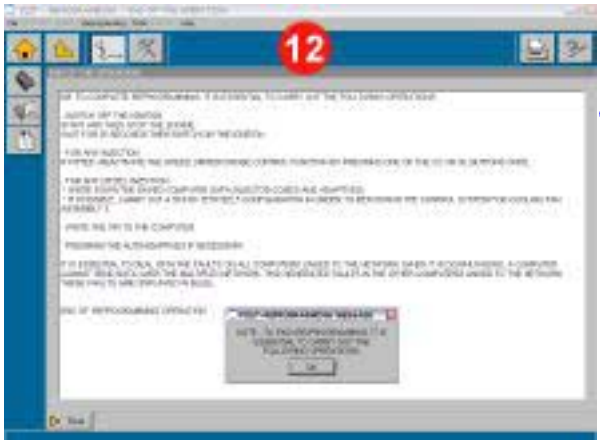

IMPORTANT: Adhere to the instructions.

END: Return to the home page 1.

CLIP SCREEN ERROR MESSAGES AND PROCEDURE TO FOLLOW

SCREEN	CLIP ERROR MESSAGE	ORIGIN	PROCEDURE TO FOLLOW
01	**THE VEHICLE CANNOT BE IDENTIFIED WITH THIS VIN...**	After the VIN has been entered into the main menu	• Re-enter the VIN. *Note:* the VIN does not contain: – the letter O as it can be confused with the number 0. – the letter I as it can be confused with the number 1.
01	**AUTOMATIC IDENTIFICATION HAS FAILED...**	After the VIN automatic search button has been pressed	• Check the sensor/PC and vehicle/sensor connections. *Note:* Ensure that the 4 green and red sensor LEDs are lit. • If the fault is still present, contact the CLIP After-Sales service.
02	**CLIP INTEGRITY PROBLEM...**	After the reprogramming button has been pressed	• Reinstall CLIP with the latest available version. • If the fault is still present, carry out the **EMERGENCY PROCEDURE**.
02	**THIS VEHICLE HAS NO REPROGRAMMABLE COMPUTERS**	Following the reprogramming button being pressed	• CLIP integrity error: Reinstall CLIP with the latest available version. • If the fault is still present, carry out the **EMERGENCY PROCEDURE**.
03	**DIALOGUE WITH THE COMPUTER IMPOSSIBLE...**	Following selection of the computer to reprogram	• Check the connections. • If the fault is still present, carry out the **EMERGENCY PROCEDURE**.
03	**OPERATION INTERRUPTED: CANNOT ACQUIRE NECESSARY DATA...**	Following selection of the computer to reprogram	• Restart operation. • If the fault is still present, carry out the **EMERGENCY PROCEDURE**.
03	**IMPORTANT: THE VIN READ IN THE COMPUTER TO BE REPROGRAMMED DOES NOT CORRESPOND...**	Following selection of the computer to reprogram	• As a default, use the VIN of the computer (not that from the main menu).
04	**THE REPAIR ORDER NUMBER MUST NOT EXCEED 6 CHARACTERS**	After a repair order number has been entered	• Check that the order number entered is correct (6 alphanumerical characters).
04	**THE TECHNICAL SPECIFICATION CRITERION MUST BE COMPOSED OF 10 CHARACTERS**	After the Vehicle Technical Specification has been entered at the request of Techline or as described in a Technical Note.	• Check that the Vehicle Technical Specification contains 10 alphanumerical characters. E.g: 0000CR347B • If the fault is still present, carry out the **EMERGENCY PROCEDURE**.
06	**BATTERY VOLTAGE TOO LOW... or TOO HIGH...**	At any point in the reprogramming procedure	• Connect an approved battery charger to the vehicle.
07	**TO CARRY OUT REPROGRAMMING VIA RENAULT.NET...**	After the battery voltage has been checked	• Check that the wireless connection device is working. • If the fault is still present, contact the CLIP After-Sales service, • Or use the latest version of the reprogramming CD.
07	**NO CD-ROM IN THE READER...**	When the reprogramming mode is being selected	• Insert the latest available version of the reprogramming CD. • If the fault is still present, contact the CLIP After-Sales service.

CLIP SCREEN ERROR MESSAGES AND PROCEDURE TO FOLLOW (continued 1)

SCREEN	CLIP ERROR MESSAGE	ORIGIN	PROCEDURE TO FOLLOW
07	**THE REPROGRAMMING CD-ROM IN USE IS TOO OLD...**	When the reprogramming mode is being selected	• Insert the latest available version of the reprogramming CD. • If the fault is still present, contact the CLIP After-Sales service.
07	**THE CD-ROM TO INSERT IS THE REPROGRAMMING CD-ROM**	When the reprogramming mode is being selected	• Check that the CD being used is a reprogramming CD. • If the fault is still present, contact Techline or the CLIP After-Sales Service.
07	**THE CD-ROM READER IS NOT FUNCTIONING CORRECTLY...**	When the reprogramming mode is being selected	• Follow the on-screen instructions. • If the fault is still present, contact the CLIP After-Sales Service.
	After-Sales Service ERROR 651 **After-Sales Service ERROR 655**	After having selected the Renault.Net mode	• CLIP integrity error in RENAULT.NET mode. • Restart the reprogramming procedure. • If the fault is still present, contact your IT representative or the CLIP After-Sales Service.
	After-Sales Service ERROR 652 **After-Sales Service ERROR 653** **After-Sales Service ERROR 654** **After-Sales Service ERROR 656** **After-Sales Service ERROR 657**		• CLIP (in RENAULT.NET mode) or reprogramming CD (in CD mode) integrity error. • In mode RENAULT.NET mode, reinstall CLIP • In CD mode, restart with another reprogramming CD (previous version if necessary). • If the fault is still present, contact the After-Sales Service or carry out the **EMERGENCY PROCEDURE**.
08	**TRANSMISSION FAULT...**	During authentication on Renault.Net	• Check the Renault.Net connection. • If the fault is still present, contact your IT representative or the CLIP After-Sales Service.
08	**TRANSMISSION FAULT...**	Whilst searching Renault.Net for the file to download	• Restart the reprogramming procedure. • If the fault is still present, contact your IT representative or the CLIP After-Sales Service.
08	**DEFECTIVE DATABASE,...**	Whilst finding the file to download	• Check faults linked to the CD (operation, presence or version of the CD). • Try with another CD (same or previous version). • If the fault is still present, carry out the **EMERGENCY PROCEDURE**.
08	**VEHICLE TECHNICAL SPECIFICATION NOT RECOGNISED IN RENAULT DATABASE...**	Whilst finding the file to download	• Enter the Vehicle Technical Specification, checking it is correct (10 alphanumerical characters). E.g: 0000CD347B • If the fault is still present, carry out the **EMERGENCY PROCEDURE**.

CLIP SCREEN ERROR MESSAGES AND PROCEDURE TO FOLLOW (continued 2)

SCREEN	CLIP ERROR MESSAGE	ORIGIN	PROCEDURE TO FOLLOW
08	**ERROR 10X:...** **(X = 1 to 9),** **EMERGENCY PROCEDURE**	Whilst finding a file	Carry out the **EMERGENCY PROCEDURE**.
08	**COMPUTER ALREADY REPROGRAMMED, CANNOT PERFORM OPERATION...**	Whilst finding a file	• RENAULT.NET mode: the computer does not need to be reprogrammed. • CD mode: Restart the operation using the latest available version of the CD. If the message remains, the computer does not need to be reprogrammed.
08	**VIN NOT RECOGNISED IN RENAULT DATABASE...**	Whilst finding a file	• Restart the reprogramming procedure, checking that the VIN corresponds to that of the vehicle. • If the fault is still present, carry out the **EMERGENCY PROCEDURE**. • *Note:* In CD mode, it is possible that CLIP will not recognise the VIN if the vehicle has been recently manufactured.
10	**THE AFTER-SALES REPROGRAMMING KEY ENTERED IS INCORRECT**	After the After-Sales reprogramming code has been entered	• Re-enter the reprogramming code. • If the fault is still present, carry out the **EMERGENCY PROCEDURE**.
11	**DIALOGUE WITH THE COMPUTER IMPOSSIBLE...**	Whilst downloading a file	• Follow the on-screen instructions.
11	**COMPUTER FAULT: CANNOT UNLOCK...**	Whilst downloading a file	• Check that the pre-reprogramming instructions have been followed: see [01B-4]. • Restart the programming - reprogramming operation. • If the fault is still present, print the computer identification screen and the history and carry out the **EMERGENCY PROCEDURE**.
11	**COMPUTER FAULT: CANNOT ERASE...**	Whilst downloading a file	• Check that the pre-reprogramming instructions have been followed: see [01B-4]. • Restart the programming - reprogramming operation. • If the fault is still present, print the computer identification screen and the history and carry out the **EMERGENCY PROCEDURE**.
11	**COMPUTER FAULT: DOWNLOADING INTERRUPTED...**	Whilst downloading a file	• Check the connections and the battery voltage and restart the operation. • If the fault is still present, carry out the **EMERGENCY PROCEDURE**.
11	**NON LOCKING ERROR OCCURRED DURING WRITING...**	At the end of downloading a file	• The computer's history is full. This is not a critical error and it will not affect the reprogramming of the vehicle.
11	**THE COMPUTER HAS NOT RESPONDED TO THE LAST REQUEST...**	At the end of downloading a file	• Try to re-establish dialogue with the computer. • If the vehicle no longer starts, carry out the **EMERGENCY PROCEDURE**.

CODE SERVER PROCEDURE (in CD mode only)

When programming - reprogramming with the reprogramming CD Part No. 77 11 298 859, enter an *After-Sales reprogramming code* to be able to carry out the operation.

This code is provided by the code management server on RENAULT.NET after having entered the VIN and the reprogramming code displayed on the 10 RENAULT CLIP diagnostic tool screen.

Refer to **Technical Note 3315E** for more details.

Steps:
1 CLIP provides a *"reprogramming code".*
2 Provide the code management server with the *reprogramming code* and the VIN of the vehicle.
3 The server issues an "*After-Sales reprogramming code*".
4 Enter this code in CLIP.

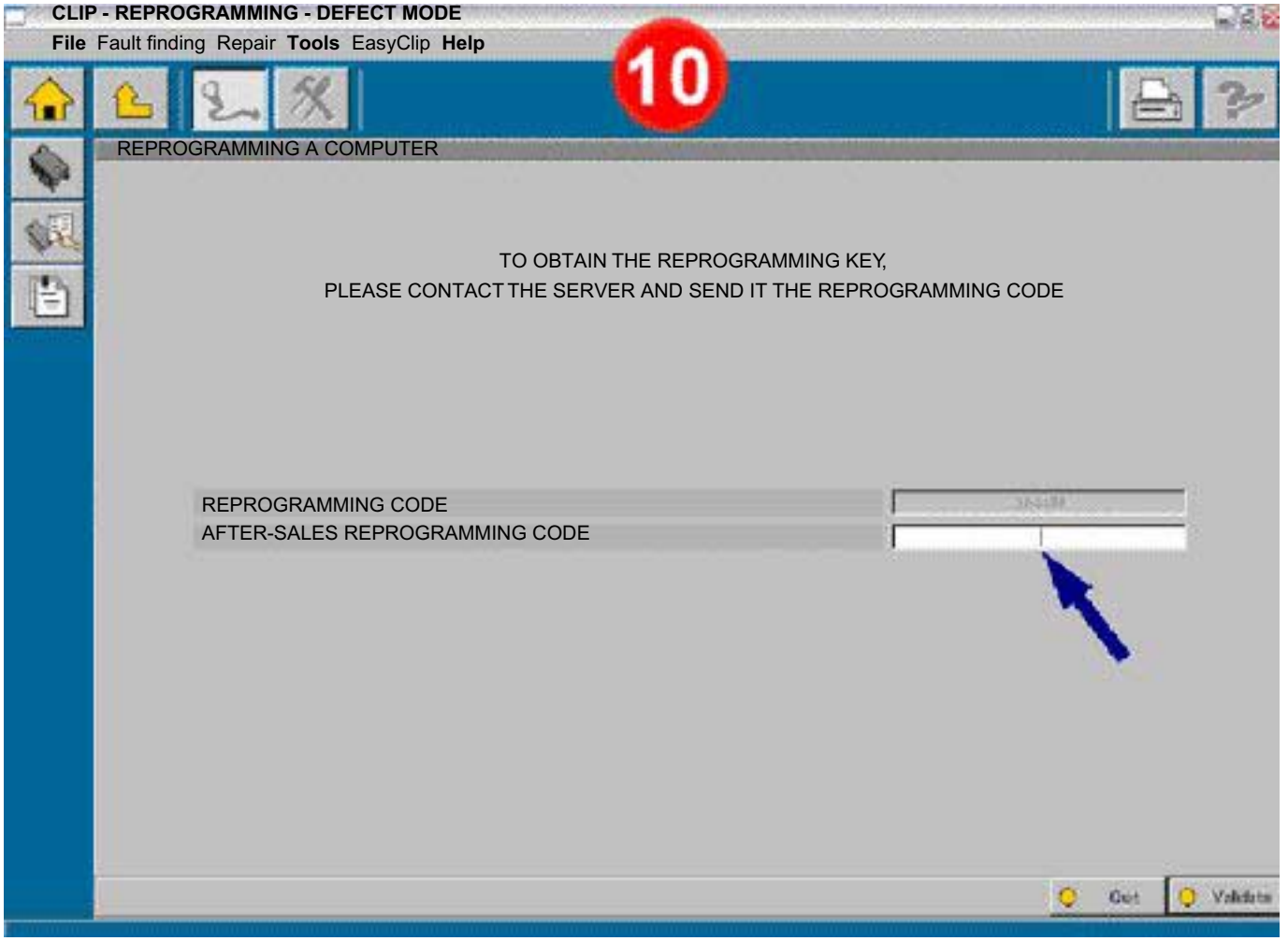

EMERGENCY PROCEDURE

The EMERGENCY PROCEDURE must be carried out when programming - reprogramming is interrupted by a message advising you to contact Techline.

Example: **ERROR 10X** (X = 1 to 9)
EMERGENCY PROCEDURE, PLEASE CONTACT YOUR TECHLINE

The EMERGENCY PROCEDURE consists of using ACTIS or FAX to produce a customer fault log, to be sent to Techline, containing the following information:

- The VIN of the vehicle.
- The fabrication number of the vehicle.
- The code or error message specified in CLIP (e.g: ERROR 105).
- The type of computer (INJECTION, AIR CONDITIONING, etc).
- The Parts Department reference number for the computer read using the tool in the COMPUTER identification fault finding screen: see **CONSULTING THE IDENTIFICATION FRAME**.
- The Hardware Part No. for the computer read using the tool in the COMPUTER identification fault finding screen: see **CONSULTING THE IDENTIFICATION FRAME**.

The speed and relevance of the solution provided by Techline will depend on the accuracy with which this information is entered into the customer fault log.

Following Techline's analysis of the fault, a **10 character** code (e.g: 0000CD347B) should be sent back to you. Carry on with the programming - reprogramming procedure and enter the *Vehicle Technical Specification* code on the 4 RENAULT CLIP diagnostic tool screen.

1 : Enter the Repair Order Number
2 : Enter the *Vehicle Technical Specification* code.

an unconventional error could lead Techline to demand:

- the computer IDENTIFICATION FRAME: see **CONSULTING THE IDENTIFICATION FRAME**,
- the HISTORY: see **CONSULTING THE HISTORY**,
- the consultation of the TOOL LOG: see **CONSULTING THE TOOL LOG**,
- the creation of a spy file: see **SPY FILE**.

CONSULTING THE COMPUTER IDENTIFICATION FRAME

Consulting the computer identification frame can enable a problem to be better understood during an **EMERGENCY PROCEDURE**.

It allows the current (dummy) component Part No. of the computer to be consulted and to confirm that the (re)programming has been correctly carried out.

Upon the request of Techline, print this screen of information and send it to Techline:

- Access the identification frame screen:
  MULTIPLEX NETWORK TEST/COMPUTER FAULT FINDING/IDENTIFICATION FRAME
- Press the **Print screen Syst** button on the top right-hand side of the RENAULT CLIP diagnostic tool keypad.
- Open WORDPAD (**Start** → **Programs** → **Accessories** → **WordPad**),

  in the **Edit** menu, **Paste** the print screen,
  then: print the document to send by fax to Techline,
  or copy it onto a disk to send by mail to Techline,
  or register the document to add it as an attachment in ACTIS.

CONSULTING THE COMPUTER HISTORY

Consulting the computer's history can enable a problem to be better understood during an **EMERGENCY PROCEDURE**.

It allows the last 8 reprogramming operations stored in the computer to be consulted and displays, among others, the different (dummy) component Part No's. of the computer by (re)programming date.

Upon the request of Techline, print this screen of information and fax it to them.
See **CONSULTING THE COMPUTER IDENTIFICATION FRAME** for how to print a screen.

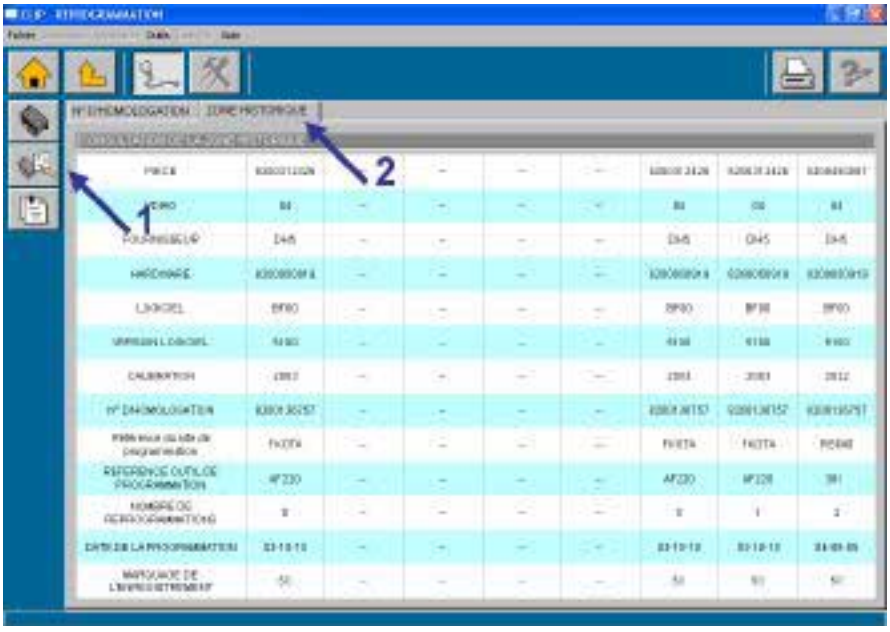

1 - Icon: COMPUTER CONSULTATION
2 - Tab: HISTORY

CONSULTING THE DIAGNOSTIC TOOL LOG

Consulting the RENAULT CLIP diagnostic tool log can aid:
- understanding of a fault during an **EMERGENCY PROCEDURE**.
- the recovery of CODECAL from the last reprogramming operations carried out.

This log enables the last 50 reprogramming operations stored in the RENAULT CLIP diagnostic tool to be consulted, displayed in chronological order, most recent first.

This screen will provide, amongst other information:
- The vehicle's VIN.
- The Repair Order Number
- The programming - reprogramming CODECAL
- The new (dummy) Part No. for the computer in addition to that read in the **CONSULTING THE COMPUTER IDENTIFICATION FRAME**.

At the request of Techline, print the screen containing this information and fax it to them.
See **CONSULTING THE COMPUTER IDENTIFICATION FRAME** for how to print a screen.

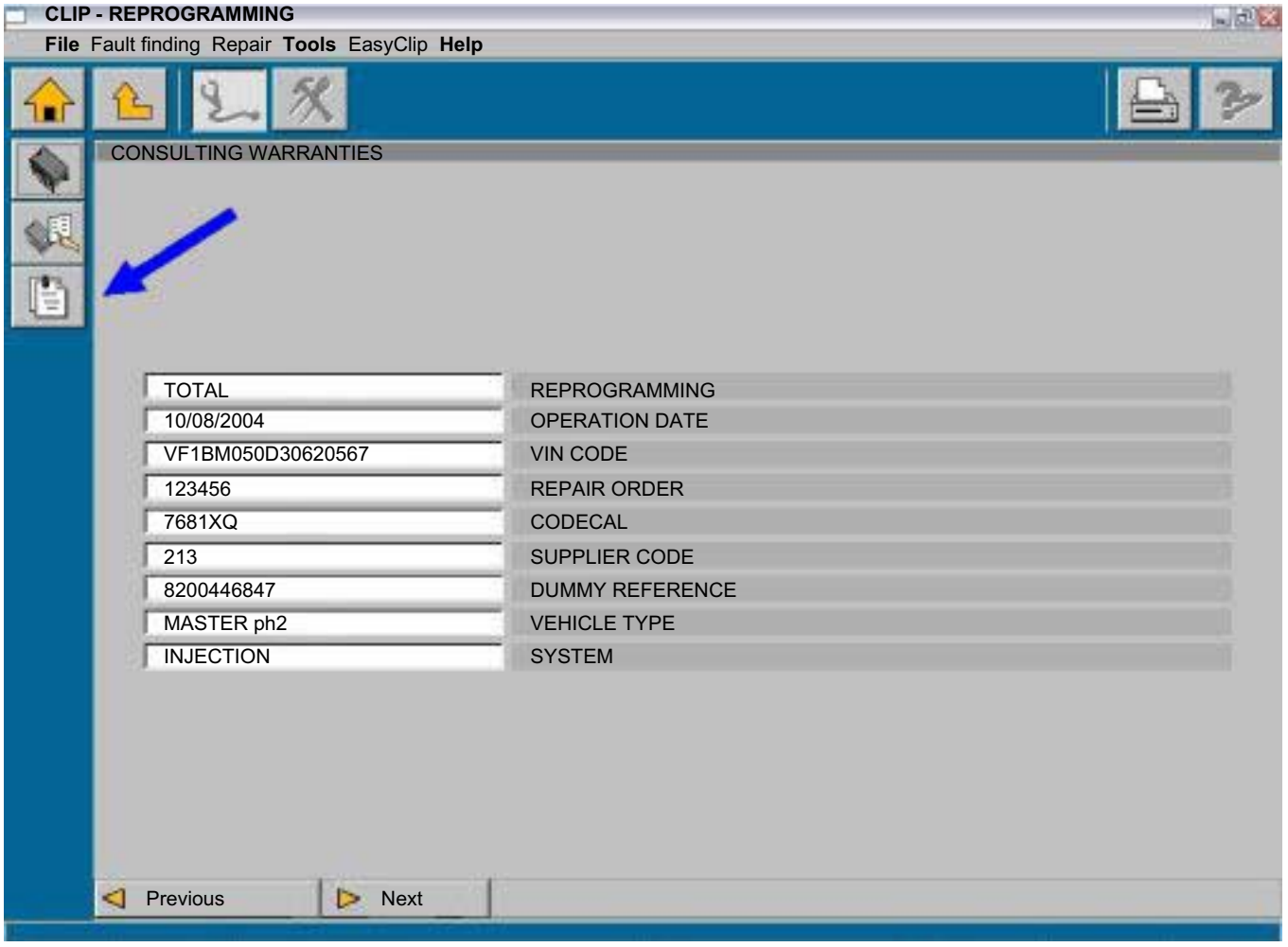

SPY FILE (upon the request of Techline)

Creating the spy file

- After starting up the **CLIP** software, click on the **Tools** tab, then on **Tool configuration**.

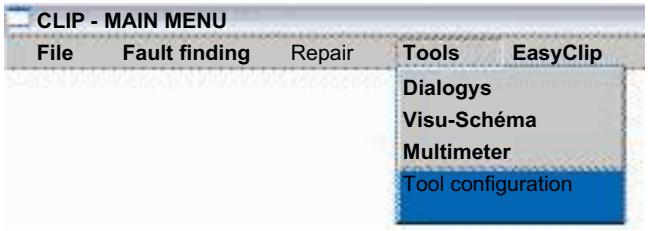

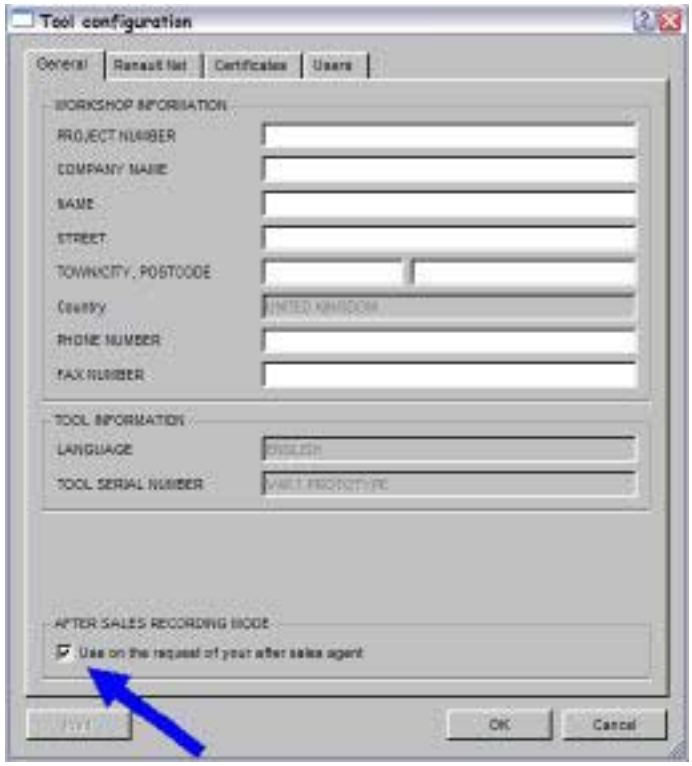

- In the **Tool configuration** window.

  Tick the **AFTER-SALES SAVE MODE** box, then confirm with **OK**.

- Carry out the programming - reprogramming until the error message is displayed.

Recovering the spy file after programming - reprogramming

- Close the CLIP application (Return to the CLIP home page then EXIT)
- In the Windows **Start** menu (bottom left-hand corner of the Windows screen), select **Work Station**
  Then select (double left click) successively: **Local Disk (C:)** / **CLIP** / **DATA** / **USER** / **LOGS**
- Insert a 3 1/2 disk in the CLIP diagnostic tool disk drive.
- Select the spy file (left click once) "**clip.log**",
  then copy the file into a disk: Right click with the mouse, select ***send_to*** **"3 1/2 Disk (A)"**

The spy file will now be copied onto the disk.
Send this file to your Techline by mail.

Note:
For any RENAULT CLIP diagnostic tool in **Windows XP**, zip the "clip.log" file before copying it to the disk:
- Select the spy file "**clip.log**".
- Right click the mouse on the "**clip.log**" file, select **Properties**.
- Then ***send_to*** **"Zip Folder"**.

The spy file will now be in the "**clip.zip**" format and can be copied to the disk.

RENAULT

Technical Note3598A

X06 - X76 - X65 - X85 - X77 - X90, and L90 - X84, and B84 or C84 or G84 or S84 - X84, and J84 - X74 - X73 - X81, and J81 - X83 - X24 - X70 - X64, and B64 - X64, and J64

Preparation of new vehicle before handover

TWINGO: X06X - KANGOO Phases I and II: XCXX - CLIO II: XBXX - CLIO III: XRXX - MODUS: XPXX - LOGAN: LS0X - MEGANE I: XAXX - SCENIC I - JAXX - MEGANE II: XMXX - SCENIC II: JMXX - LAGUNA II Phases I and II: XGXX - VEL SATIS Phases I and II: XJXX - ESPACE IV: JKXX

TRAFIC II: XLXX - MASTER RWD Phases I and II: XHXX - MASTER II Phases I and II: XDXX

Sub-section concerned: 01D - 01F

Edition 4

77 11 335 922 **APRIL 2005** **Edition Anglaise**

"The repair methods given by the manufacturer in this document are based on the technical specifications current when it was prepared.

The methods may be modified as a result of changes introduced by the manufacturer in the production of the various component units and accessories from which his vehicles are constructed."

All copyrights reserved by Renault.

The reproduction or translation in part of whole of the present document, as well as the use of the spare parts reference numbering system, are prohibited without the prior written consent of Renault.

© Renault s.a.s. 2006

Preparation of new vehicle before handover

Contents

Page

01D **MECHANICAL INTRODUCTION**

New vehicle: Preparation 01D-1

01F **BODYWORK INTRODUCTION**

New vehicle: Cleaning 01F-1

X85 – X06 – X64 – X65 – X24 – X70 – X73 – X74 – X76 – X81 – X83 – X84 – X90

I - INTRODUCTION:

This Technical Note describes the stages to be followed for the preparation of new vehicles before handover.

Note:

For all points in the preparation process marked with [ ], the relevant check is the direct responsibility of the dealership and will be carried out as close as possible to the delivery of the new vehicle (tyre inflation pressures, checking and topping up fluids, ensuring no instrument panel warning lights come on, etc.).

II - IMPORTANT POINTS:

- If the vehicle is stored after its preparation, take out the consumer cut-out fuse (see Technical Note or MR), and if the vehicle must remain in storage for more than three months, disconnect the battery (see Technical Note or MR).
- To guarantee that the battery remains in good condition, keep the number of vehicle engine starts to a minimum. Test the battery just before delivery to the customer (taking into account the possible charging time).
- When connecting a battery, initialise some of the vehicle functions (see Technical Note or MR).
- Check in the ICM (Shared World Information) database that the vehicle is not affected by an OTS (Special Technical Operation).

III - OPERATIONAL INSTRUCTIONS FOR THE PREPARATION:

Preliminary operations:

- Check the external appearance of the vehicle and apply a slight touch-up if necessary.
- Fit the vehicles with optional equipment (alarm, radio, etc.).
- Check that the spare key or second card is present.

Removing the protection features and washing:

- Remove the exterior protection, rubbers and adhesives.
- Take out the wiper blade shims.
- For LOGAN clean off the wax on the painted bodywork and bumpers (see **01F Introduction to bodywork, New vehicle: Cleaning**).

Battery:

- To facilitate battery testing when preparing the new vehicle, the battery cover is placed temporarily in the luggage compartment.
- Check the battery (see Technical Note 3682A Routine battery check before delivering new vehicles). Transfer the Battery correct code to the Delivery quality sheet in accordance with the MIDTRONICS test or the code corresponding to the indicator light test.
- SuperSleep mode (if fitted to the vehicle):
  - To conserve the battery, some functions are disabled in the factory. The two direction indicators in the instrument panel are permanently lit when a door is opened to indicate this mode.
  - To deactivate this mode, simultaneously pull down the two levers under the steering wheel then return them to their original position (do not switch on the ignition to deactivate this mode).
  - If the Warning battery charge indicator light comes on, carry out the procedures described in Technical Note 3682A.

WARNING

Never drive the vehicle over long distances without the battery cover fitted. This can lead to irreparable faults in the injection computers (example: MEGANE II).

Exterior:

- Check the operation of the locks (key or card) and the doors and tailgate.

Wheels and tyres:

- [ ] Pressurise the tyres (to full load) including the emergency spare wheel (or check that there is a puncture repair aerosol and check its expiry date), then make sure that the valve caps are in place.
- Fit the wheel trims.

Engine compartment:

- [ ] Check and top up the fluids:

Test conditions:

	Engine temperature
Windscreen washer fluid	Either hot or cold
Power-assisted steering fluid	Either hot or cold

X85 – X06 – X64 – X65 – X24 – X70 – X73 – X74 – X76 – X81 – X83 – X84 – X90

Brake fluid	Either hot or cold Make sure that the brake fluid cap is in place Make sure that there are no traces of brake fluid outside the brake fluid reservoir
Coolant	When cold
Engine oil	When cold or at least half an hour after the engine was last switched off

Acceptance criteria for correct levels:

	Minimum value	Maximum value	Type of gauge
Windscreen washer fluid	-	Maximum	-
Power-assisted steering fluid	Minimum	Maximum	On the reservoir
Brake fluid (two possible procedures depending on the vehicle)	Medium between minimum and maximum	Maximum	On the reservoir
	Check to see that the brake fluid level warning light goes out on the instrument panel		-
Coolant	Minimum + 10 mm	Maximum	On the reservoir
Engine oil	Maximum - 5 mm	Maximum	Mechanical on the engine

All vehicle levels following the new vehicle preparation process must comply with the acceptance criteria described above.

WARNING

An engine oil level above the maximum value may cause engine breakdown.

A level below the minimum value indicates a fault.

Note:

Topping up the fluid is often required because of a leak in the circuit.

It is essential to check the general condition of the vehicle if a significant amount of fluid is being added.

- Remove the adhesive protectors if present (e.g. on the front engine cover).
- For the MODUS and CLIO III:
  - [ ] Fit the battery cover. In certain cases, this is provisionally placed in the luggage compartment.
  - [ ] For 1.6 16V (K4M) engines, position the resonator on the air inlet duct (on the left-hand side of the vehicle, close to the battery).

Passenger compartment:

- Fit the consumer cut-out fuse (see Technical Note or MR).
- Check the operation of the ventilation in all positions (including in recirculation mode).
- Check the operation of the sliding seat adjustments (including the access to the rear seats).
- Check the operation of the electric seats.

X85 – X06 – X64 – X65 – X24 – X70 – X73 – X74 – X76 – X81 – X83 – X84 – X90

- Check the operation of the sliding centre console (SCENIC II depending on the version).
- Check the operation of the sunroof.
- Check the operation of the window lifts (including the one-touch function).
- Check the operation of the electric door mirrors.
- Check the operation of the windscreen washer and rear screen washer jets, and the headlight washers.
- Enter the four digit radio code.
- If the vehicle is fitted with a video system, see the special note.
- Check the operation of the navigation system (check that the screen lights up and that the speakers are functioning (press the + button on the CARMINAT keyboard)). Calibrate the system just before the vehicle is delivered to the customer.
- Check the operation of the speech synthesiser.
- Check that the key for locking the light alloy wheel rims is in place.
- Check that the onboard kit (the card holder, Owner's Manual, Maintenance Booklet, radio user guide, navigation system manual and CD-ROM) is in place and that it is correct and complete. Important point: Check that the Owner's Manual is in the correct language.
- Place the mats inside the vehicle.
- Remove the interior protection except for the bag protecting the engine oil filler neck (depending on vehicle).
- Fit the cup holder on the sliding centre console (SCENIC II depending on version).
- Check that the tool set is in place (jack, etc.).
- Fit a puncture repair aerosol for all vehicles not fitted with an emergency spare wheel.
- Check the interior appearance of the vehicle.

Miscellaneous:

- Fuel (if requested by the customer).
- Fit the registration plates (including the registration plate for VELOFIX, if fitted to the vehicle).
- Fit the exhaust tailpipe (depending on the vehicle).

IV - OPERATION OF LIGHTING - INDICATORS - WARNING LIGHTS:

Before any tests are carried out, always refit the short circuit fuse and disable the Super Sleep mode (if fitted to the vehicle).

1 - Before ignition:

- Front and rear courtesy lights/reading light.
- Interior lighting (vanity mirror, storage compartment, etc.).
- Luggage compartment lighting.
- Hazard and warning lights.

Lighting switch at side light position:

- Lights on reminder buzzer (door open).
- Front and rear side lights.
- Instrument panel lighting.
- Side light indicator light or instrument panel lighting (depending on the vehicle).
- Registration plate lights.

Lighting switch set to urban - road position:

- Dipped headlights and indicator light.
- Main beam headlights and indicator light.
- Front fog lights and indicator light.
- Rear fog lights and indicator light.

2 - After switching on the ignition:

Instrument panel -indicators:

- Set the trip computer to zero (depending on the vehicle).
- Set the time on the clock.
- Front and rear direction indicators and warning lights.
- Brake lights.
- DIESEL preheating indicator light.
- Seat belt buckle reminder light and buzzer (vehicle in motion).

Note:

[ ] Check that none of the indicator lights remain lit after the engine is started.

If an indicator light or a message is lit, force the indicator light or message to go out by running a self-test procedure on the instrument panel (press the trip computer button when switching on the ignition).

Confirm the absence of faults with a road test.

X85 – X06 – X64 – X65 – X24 – X70 – X73 – X74 – X76 – X81 – X83 – X84 – X90

If the indicator light is continuously lit, if it lights up again or if the instrument panel has no self-test procedure, the vehicle will need to be transferred to the workshop.

X90

CLEANING WAX FROM THE PAINTED BODYWORK PARTS AND BUMPERS.

Note:

Some sections of the vehicle contain wax, which acts as an anti-corrosion protection.

To ensure that this is achieved correctly, the wax flows slowly into the hollow sections.

This wax does not have any negative effect on the paintwork.

1 - CLEANING AGENTS

Fresh wax:

- For the bumpers, use liquid soap with solvent (CUPRAN) RENAULT Part no.: 77 11 237 792 1 litre can,
- For the painted bodywork, use windscreen washer fluid RENAULT Part no.: 77 11 228 097 500 ml spray.

Dry wax:

- For the bumpers and bodywork, use liquid soap with solvent (CUPRAN) RENAULT Part no.: 77 11 237 792 1 litre can.

2 - SURFACES TO CHECK AND CLEAN

Bonnet:

- Clean away the runs on the interior surface of the bonnet and any runs that may be present on the front bumper.

Luggage compartment lid:

- Clean away the runs on the interior surface of the luggage compartment lid and any runs that may be present on the rear bumper.

Sill panel:

- Clean away the runs on the sill panel in the area of holes provided in the underside of the doors for evacuating water.

3 - DESCRIPTION OF THE OPERATION

Remove the runs in the drain holes.

Clean, using a lint-free cloth soaked with cleaning agent.

WARNING

It is essential to use the products specified in this Technical Note.

Rinse the cleaned surfaces with water.

TECHNICAL NOTE
EDITION ANGLAISE

77 11 311 482
JULY 2002

3624A
Service 0422

All Types

Type	S/Section
XXX X	37A

37A BLEEDING THE CONCENTRIC STOP CLUTCH HYDRAULIC CONTROL

- Engine: **XXX**
- Gearbox: **XXX**

Basic manual:
All Workshop Repair Manuals

This note describes the procedure for bleeding the concentric stop clutch hydraulic control.

"The repair methods given by the manufacturer in this document are based on the technical specifications current when it was prepared.

The methods may be modified as a result of changes introduced by the manufacturer in the production of the various component units and accessories from which his vehicles are constructed."

All copyrights reserved by Renault.

Copying or translating, in part or in full, of this document or use of the service part reference numbering system is forbidden without the prior written authority of Renault.

© RENAULT 2002

NOTE:
Even the tiniest bubble in the circuit can cause faulty operation (pedal fails to return properly, crunching sound when changing gears).
Improper bleeding can result in faulty diagnostics and unnecessary part replacements.

The circuit must be bled in two spots:
1 between the reservoir and bleed plug,
2 between the bleed plug and hydraulic stop.

1 Bleeding between the reservoir and bleed plug,

Keep the clutch pedal in the up position.

Fill the hydraulic circuit with approved fluid.

Connect a transparent hose to the bleed hole and to an empty container placed under the bleed hole.

Open the bleed hole (see procedure for vehicle).

The circuit drains by gravity. A mixture of fluid and air drains out of the bleed hole.

Pump the clutch pedal quickly in succession, flooring it.

Close the bleed hole when there are no air bubbles in the fluid coming out.

Return the clutch pedal to the up position.

2 Bleeding between the bleed plug and hydraulic stop.

Push the pedal down as far as it can go.

Open the bleed hold (see procedure for vehicle); a mixture of fluid and air bubbles should come out.

Close the bleed hole.

Return the clutch pedal to the up position.

Repeat this procedure until no air bubbles are left.

Top up the fluid to the maximum mark on the reservoir.

Check that the clutch system is operating correctly.

All Types

Type	S/Section
XXX X	16A

16A STARTER MOTOR FAULT FINDING

- Engine: **XXX**
- Gearbox: **XXX**

"The repair methods given by the manufacturer in this document are based on the technical specifications current when it was prepared.

The methods may be modified as a result of changes introduced by the manufacturer in the production of the various component units and accessories from which his vehicles are constructed".

All copyrights reserved by Renault.

Copying or translating, in part or in full, of this document or use of the service part reference numbering system is forbidden without the prior written authority of Renault.

© RENAULT 2002

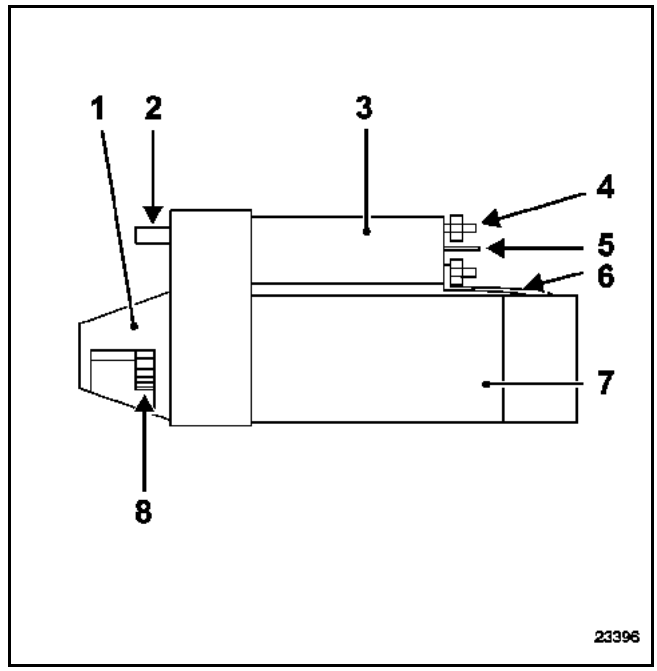

KEY:

1: Front end of starter
2: Centring dowel
3: Electromagnetic switch (solenoid)
4: Battery **+ 12 volts** terminal (power)
5: Control circuit terminal
6: Primary winding strap
7 Motor
8: Drive pinion

NOTES	None.

STARTER MOTOR INACTIVE	CHART 1
STARTER MOTOR BLOCKED	CHART 2
UNDERPOWERED STARTER MOTOR	CHART 3
INTERMITTENT OPERATION	CHART 4
NOISY STARTER MOTOR	CHART 5
STARTER MOTOR OVERHEATING	CHART 6

CHART 1	STARTER MOTOR INACTIVE The solenoid valve cannot be heard clicking.

NOTES	**Check:** **– the condition and voltage of the battery,** **– the condition of the battery wiring and terminals,** **– the condition of the earth straps,** **– the condition of the power fuse (if fitted).** **Repair or replace the faulty components, if necessary.**

Check the presence and the condition of the fuses. Replace if necessary.
Check, on the starter motor, the connection and the condition of the control terminal. Repair if necessary.
Check, with the ignition on, that the immobiliser is inactive. In the event of a problem, use the immobiliser fault finding procedure.
Check, using an ammeter, that the vehicle's consumers have not short-circuited. If there is a problem, carry out a fault search (damaged wiring, relays sticking, etc.).
Check, with the ignition on and with the starter motor operational, for the presence **+ 12 volts** on the starter motor control line. If not correct: * If the vehicle is fitted with a circuit breaker or additional alarm: – Check if it is acting on the starter motor control line. – Check the insulation and condition of the connections with the circuit breaker or the alarm. – Ensure that these are both operating correctly. – Check if **12 volts** is present before the ignition is switched off, replace the circuit breaker or alarm. * If the model is controlled by the starter motor switch: – Check the line between the switch and the control terminal. – Check that the rotary switch is operating correctly. – Check the supply to the rotary switch. * If the model is controlled by the immobiliser: – Check the line between the switch and the control terminal. – Carry out a fault finding procedure on the immobiliser. Repair or replace the faulty components, if necessary.
If everything is correct, replace the starter motor.

AFTER REPAIR	Check that the starter motor is operating correctly.

CHART 2	STARTER MOTOR BLOCKED The solenoid clicks, but the starter motor does not run.

NOTES	**Check:** **– the condition, the voltage and conformity of the battery,** **– the condition of the battery wiring and terminals,** **– the condition of the earth straps,** **– the condition of the power fuse (if fitted).** **Repair or replace the faulty components, if necessary.**

Check for the presence of **+ 12 volts** at the starter motor power terminal. If not correct, check the insulation and the continuity of the power line between the battery and starter motor. Repair if necessary.
Put the vehicle in neutral (also neutral on automatic gearboxes) and try to turn the starter motor by hand. If not correct, check: – if there is oil in the engine (seizure), – the timing adjustment, – that no auxiliary is slowing down the motor, – that the gearbox and its control are not faulty, – that there are no objects which could be blocking the free movement of the motor at the flywheel end, – that the engine is not flooded and that there is no object (dropped valve...) in the cylinders. Repair if necessary.
Check, using an ammeter, that the vehicle's consumers have not short-circuited. If there is a problem, carry out a fault search (damaged wiring, sticking relays, etc.).
If everything is correct, replace the starter motor.

AFTER REPAIR	Check that the starter motor is operating correctly.

DEMNT.01

CHART 3	UNDERPOWERED STARTER MOTOR **The starter motor is not turning the engine over quickly enough.**

NOTES	**Check:** **– the condition, the voltage and conformity of the battery,** **– the condition of the battery wiring and terminals,** **– the condition of the earth straps,** **– the condition of the power fuse (if fitted).** **Repair or replace the faulty components, if necessary.**

Check, using an ammeter, that the vehicle's consumers have not short-circuited. If there is a problem, carry out a fault search (stripped wiring, sticking relays, etc.).
Check the insulation and continuity of the starter motor power wiring to the battery. Repair if necessary.
Put the vehicle in neutral (also neutral on automatic gearboxes) and try to turn the starter motor by hand. If not correct, check: – if there is oil and water in the engine (seizure), – that no other auxiliary is slowing down the motor (coolant pump, air conditioning compressor, etc.), – the adjustment and condition (tension wheel sticking...) of the timing system, – that the gearbox and its control are not faulty, – that there are no objects which could be blocking the free movement of the motor at the flywheel end, – that the engine is not flooded and that there is no object in the in the intakes, – the valve clearances. Repair if necessary.
If everything is correct, remove the starter motor and check for signs of wear. Repair if necessary.
If everything is correct, replace the starter motor.

AFTER REPAIR	Check that the starter motor is operating correctly.

DEMNT.01

CHART 4	INTERMITTENT OPERATION **The starter motor does not operate during all the starting sequences.**

NOTES	**Check:** **– the condition, the conformity and the voltage of the battery,** **– the condition of the battery wiring and terminals,** **– the condition of the earth straps,** **– the condition of the power fuse (if fitted).** **Repair or replace the faulty components, if necessary.**

Check that the immobiliser is not faulty and that it becomes inactive each time the ignition is switched on. Perform a fault finding procedure on the engine immobiliser system if necessary.
Check the condition and the connection of starter motor control circuit terminal. Repair if necessary.
Check if the vehicle is fitted with circuit breaker or an additional alarm. Check they are working correctly.
Check the condition and insulation of starter motor control circuit line. Repair if necessary.
Check that the starter motor switch is operating correctly. Repair or replace it, if necessary.
Connect the diagnostic tool and check that the immobiliser is operating correctly (vehicles with immobiliser controlling the starter motor). Perform a fault finding procedure on the engine immobiliser system if necessary.
Remove the starter motor and check that there are no bad contacts (contact brush). Repair if necessary.
If everything is correct, replace the starter motor.

AFTER REPAIR	Check that the starter motor is operating correctly.

CHART 5	NOISY STARTER MOTOR **The noise is only present during the starting phase and afterwards.**

NOTES	**Check:** **– the condition and voltage of the battery,** **– the condition of the battery wiring and terminals,** **– the condition of the earth straps,** **– the condition of the power fuse (if fitted).** **Repair or replace the faulty components, if necessary.**

Check the mountings securing the starter motor to the engine. Reaffix if necessary.
Check **the condition of the flywheel ring gear**. Repair or replace it, if necessary.
Check the condition of the starter motor drive pinion. Check that the centring pin is present. Replace the starter motor if necessary.
If the noise persists after starting: – Check that the control circuit is no longer being supplied. If necessary, check the insulation of the control line (short circuit to **+ 12 volts**), the operation of the rotary switch and the immobiliser (if the starter motor is controlled by the engine immobiliser). Repair the faulty components. – Check that the solenoid is operating correctly and the starter motor fork is returning. Replace the starter motor if necessary.

AFTER REPAIR	Check that the starter motor is operating correctly.

CHART 6	STARTER MOTOR OVERHEATING **Odour/smoke coming from under the bonnet during the starting sequence.**

NOTES	**Check:** **– the condition and voltage of the battery,** **– the condition of the battery wiring and terminals,** **– the condition of the earth straps,** **– the condition of the power fuse (if fitted).** **Repair or replace the faulty components, if necessary.**

Check the condition of the starter motor:
– label showing signs of peeling,
– blue annealing at terminals,
– wiring has melted,
– paint melting/or odour of paint melting.

Before replacing the starter motor, check that there is no external cause for this fault (water or oil leak from above, motor seized or abnormally difficult to turn, short circuit, etc.).

AFTER REPAIR	Check that the starter motor is operating correctly.

TECHNICAL NOTE
EDITION ANGLAISE

77 11 311 762
MAY 2002

3633A
Service 0422

ALL TYPES

Type	S/Section
XXX X	30A

except 4x4 vehicles and vehicles with all-wheel drive

30A WHEEL BEARING FAULT FINDING PROCEDURE

- Engine: **XXX**
- Gearbox: **XXX**

The aim of this Technical Note is to optimise the fault finding procedure for wheel bearings and to reduce the number of unnecessary removals.

"The repair methods given by the manufacturer in this document are based on the technical specifications current when it was prepared.

The methods may be modified as a result of changes introduced by the manufacturer in the production of the various component units and accessories from which his vehicles are constructed.

All copyrights reserved by RENAULT.

Copying or translating, in part or in full, of this document or use of the service part reference numbering system is forbidden without the prior written authority of RENAULT.

© RENAULT 2002

➡ Ask the customer for information regarding the conditions in which the noise occurs as soon as the repair order is issued.

- The noise of a faulty wheel bearing **can always be reproduced**.
- The wheel bearing noise may increase with speed and/or when cornering.

Carry out a road test, can the customer complaint be reproduced?

no → The bearing is not faulty.

Important: tyre noise may be comparable to bearing noise.

yes ↓

1 - For the front

- Raise one wheel only.
- Place the vehicle on an axle stand (do not leave the vehicle resting on the jack).
- Place a chock in front of a rear wheel.
- Remove the raised wheel.
- Turn the assembly using the engine (do not exceed 33 mph (50 km/h) on the speedometer).

IMPORTANT:

Do not touch rotating parts.

- Assess the noise or the vibration using a sound amplifier (stethoscope) resting on the stub axle carrier.

2 - For the rear

- Raise one wheel only.
- Place the vehicle on an axle stand (do not leave the vehicle resting on the jack).
- Place a chock in front of a front wheel.
- Turn the wheel manually.
- Assess the noise or the vibration using a sound amplifier (stethoscope) resting on the suspension arm (as close to the hub as possible)

↓

Is there any noise and/or vibration?

no → The bearing is not faulty.

Important:
Carry out the operation for the other wheels of the vehicle.

yes ↓

Replace the faulty bearing on the side identified.

All Types

Type: XXX X

S/Section: 35A

This note supplements Technical Note 3515A.
Modifications: Additional information.

35A 2002 MODEL APPROVED TYRES

- Engine: **XXX**
- Gearbox: **XXX**

CHART OF 2002 MODEL APPROVED TYRES

SEE OVERLEAF

– Reminder of fitting instructions:

  * If the side of the tyre has a **Red Dot**, mount that side facing outwards.

  * For tyres without a **Red Dot**, mount the side with the **DOT** mark facing outwards.

– We would like to remind you that it is **VITAL** to check the tyre pressure when preparing new vehicles. In fact, they are overinflated to **2.5** to **3 bar** at the factory.

"The repair methods given by the manufacturer in this document are based on the technical specifications current when it was prepared.

The methods may be modified as a result of changes introduced by the manufacturer in the production of the various component units and accessories from which his vehicles are constructed".

All copyrights reserved by RENAULT.

Copying or translating, in part or in full, of this document or use of the service part reference numbering system is forbidden without the prior written authority of RENAULT.

© RENAULT 2002

TWINGO

Dimensions	CONTINENTAL	DUNLOP	KLEBER	MICHELIN
145/80 R13	-	-	C801S	MXTE
145/80 R13S	-	SP9	-	-
145/80 R13T	CEC/EP	-	-	-
155/65 R14T	-	-	-	ENERGY XT1 TL
155/70 R13T	CEC/EP	-	C701TK	XT 1

KANGOO

Dimensions	CONTINENTAL	DUNLOP	FATE	KLEBER	MICHELIN
165/70 R14	ECO CTC 6204	SP LT30-4	-	C100	-
165/70 R14C	VANCO 6211	-	(***)	CT100	AGILIS 51
165/75 R14C	-	-	-	-	AGILIS 61
175/65 R14	CEC/EP	-	-	-	ENERGY XT1 TL
185/65 R15	-	-	-	-	4X4 SYNCHRONE

(***) Mercosur

CLIO

Dimensions	CONTINENTAL	DUNLOP	MICHELIN	GOODYEAR
165/65 R14T	CEC/EP	-	XT1 TL	-
165/70 R13T	CEC/EP	SP10 3E	ENERGY XT1 TL	-
165/70 R14T	-	-	XT AS (***)	-
175/60 R14H	CH90	-	-	NCT 3
175/60 R14T	-	-	79 T ENERGY XT2	-
175/65 R14T	ECE/EP	SP10 3E TL	-	GPS2 (***)
175/70 R13T	-	-	ENERGY XT1 TL	GT2 (*)
185/55 R15H	PREMIUM CONTACT	-	ENERGY XH1 TL	-
185/60 R14H	-	-	ENERGY XH1 TL	NCT 3

(*) Turkey, Russia
(***) Mercosur

MEGANE XAXX

Dimensions	CONTINENTAL	DUNLOP	KLEBER	GOODYEAR	MICHELIN	PIRELLI
165/70 R13T	-	-	C701T 165/70	-	ENERGY MXT	-
175/65 R14T	CEC/EP	-	-	-	XT 1	-
175/70 R14T	-	-	-	GT2	MXTE	-
185/55 R15H	-	-	-	-	XH1	-
185/55 R15V	-	SP2000	-	-	-	-
185/60 R15H	ECO/CP	-	-	-	XH1	-
185/65 R15T	CEC/EP	SP10 3E TL	-	-	-	-
185/70 R14T	CEC/EP	SP9	-	-	MXT ENERGY	-
195/50 R16V	-	-	-	-	SXGT	P6000
195/60 R15H	-	-	-	-	ENERGY XH1 TL	-
205/50 R16	-	-	-	-	PILOT PRIMACY TL	-
205/55 R15	CEC/EP	-	-	-	-	-
215/60 R16	-	-	-	WRANGLER HP (*)	4X4 SYNCHRONE TL (**)	-

(*) Scenic 4X4 (F4R)
(**) Scenic 4X4 (F9Q)

LAGUNA I

Dimensions	CONTINENTAL	DUNLOP	KLEBER	MICHELIN	PIRELLI
185/65 R14H	CH90	-	-	MXV3-A	P4000
185/65 R14T	CT22	SP9	-	ENERGY MXT	P2000
195/65 R15H	-	SP 220 E	-	ENERGY MXV3-A	-
195/65 R15T	-	-	-	MXT2	-
195/70 R14T	-	-	-	MXTE	-
205/60 R15H	-	-	C601H	-	-

LAGUNA II

Dimensions	CONTINENTAL	DUNLOP	MICHELIN
195/65 R15 - 91H	-	-	ENERGY XH1 TL
205/55 R16 - 91V	PREMIUM CONTACT	SP SPORT 2000 E	PILOT PRIMACY G1 TL
205/55 R16 - 94V	-	-	PILOT PRIMACY G1 EL TL
205/60 R16 - 96V	PREMIUM CONTACT	-	-
225/45 R17 - 94V	CONTI SPORTCONTACT	-	PILOT PRIMACY EXTRA LOAD TL

VEL SATIS

Dimensions	CONTINENTAL	MICHELIN
225/55 R17 - 101W	PREMIUM CONTACT	PILOT PRIMACY EL G1 TL
245/45 R18 - 100W	-	PILOT PRIMACY XL TL
245/45 R18 - 96Y	CONTI SPORTCONTACT	-

ESPACE JE0X

Dimensions	MICHELIN
195/65 R15 - 91T	MXT
205/65 R15 - 94H	XH1
215/55 R16 - 93V	PRIMACY
225/55 R16 - 95V	PRIMACY

AVANTIME

Dimensions	MICHELIN
225/50 R17 - 94V	PRIMACY
225/50 R17 - 96V	PRIMACY
225/55 R16 - 95V	PRIMACY
225/55 R16 Renf - 99V	PRIMACY
235/45 R18 Renf - 98W	PRIMACY

TRAFIC

Dimensions	CONTINENTAL	GOODYEAR
195/65 R16C - 100/98T	VANCO-6	CARGO G 26
205/65 R16C - 107/105T	VANCO-8	CARGO G 26
215/65 R16C - 106/104T	VANCO-6	CARGO G 26

MASTER

Dimensions	CONTINENTAL	DUNLOP	KLEBER	MICHELIN
195/65 R16C - 104/102R	-	SP LT30-8	CT300	-
205/75 R16C - 110/108R	VANCO-8	-	-	-
215/65 R16C - 109/107R	VANCO-8	-	-	-
225/65 R16C - 112/110R	VANCO-8	-	-	-
225/65 R16C - 112R	-	-	-	AGILIS 81

RENAULT

Technical Note 3682A

XXXX

Basic manual: Technical Note 3598A

Inspection of batteries before delivery of new vehicles

This note cancels and replaces Technical Note 3682A of September 2005

77 11 323 862 **Edition 6 - NOVEMBER 2005** **EDITION ANGLAISE**

"The repair procedures given by the manufacturer in this document are based on the technical specifications current when it was prepared.

The procedures may be modified as a result of changes introduced by the manufacturer in the production of the various component units and accessories from which his vehicles are constructed."

All rights reserved by RENAULT s.a.s.

Copying or translating, in part or in full, of this document or use of the service part reference numbering system is prohibited without the prior written authority of RENAULT s.a.s.

© Renault s.a.s. 2005

Contents

Page

80A BATTERY

Battery: Test **80A-1**

General Information 80A-1

Test procedure for battery fitted with a visual indicator 80A-3

Battery: Advice **80A-8**

Precautions before disconnecting and after reconnecting batteries 80A-8

Battery charging **80A-12**

Battery charging procedure
Charging equipment to be used 80A-12
battery fitted with a visual indicator 80A-13

GENERAL INFORMATION:

This Technical Note describes the procedure for testing that the battery is in good condition.

To ensure that the new vehicle is delivered with a sound battery, the inspection must be carried out as late as possible (as close as possible to the delivery of the new vehicle to the customer), allowing for any time needed for recharging or replacing the battery.

This must allow for the different cases of discharge encountered between preparation and delivery: exposure, storage, etc.

The test procedure is carried out using a visual indicator.

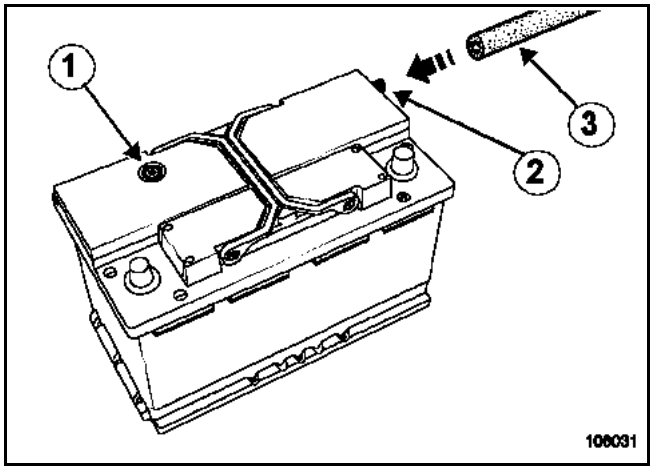

1 Visual indicator
2 Degassing vent
3 Degassing hose (if fitted)

Note:
After having tested the battery, enter the message **battery OK** onto the new vehicle delivery sheet and into the information systems, along with the code to be reported (date of the test, in ymmdd format, followed by -TV for visual indicator (témoin visuel). For example, for a battery tested as OK on 1st August 2003, enter the code 30801-TV).

Visual inspection:

- **of the mounting:** the battery must be fixed using the correct tightening torque (see **MR for the vehicle concerned, 80A, Battery, Battery: Removal - Refitting**). Excessive tightening is not beneficial and can be dangerous, as it can damage, or even break, the battery. Conversely, insufficient tightening allows too much play, and there may be wear caused by battery movement and breakage caused by impact.

- **of the terminals:** check that the connectors are securely attached to the battery terminals.

- **of the battery:** make sure there is no crack or breakage, traces of acid, or creepage (sulphation) on the terminals. If creepage is present, replace the battery and clean the surrounding area.

  Check that the degassing hose (depending on version) is properly connected to the battery vent.

IMPORTANT
All these vehicles are equipped with a low water consumption battery. Opening the battery and topping up the electrolyte level are prohibited.

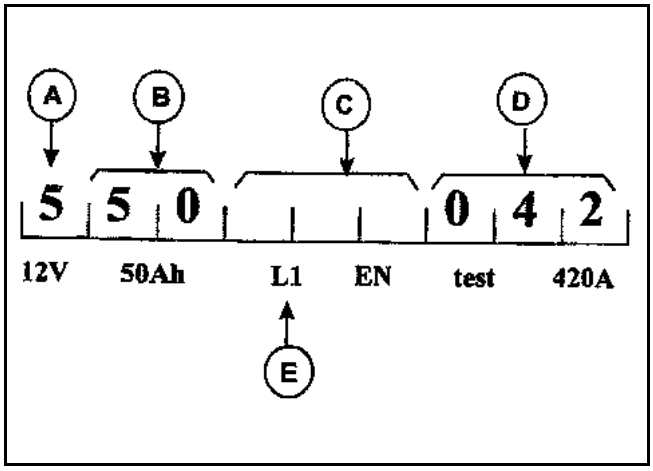

A **+ 12 V Code**
B **Electrical capacity**
C **Location of terminals, size of tray, quality, performance level (if shown).**
D **Maximum current when starting (e.g. 420 A is written 042).**
E **Dimension code (LB = small size)**

CHECKING A BATTERY WITH A VISUAL INDICATOR

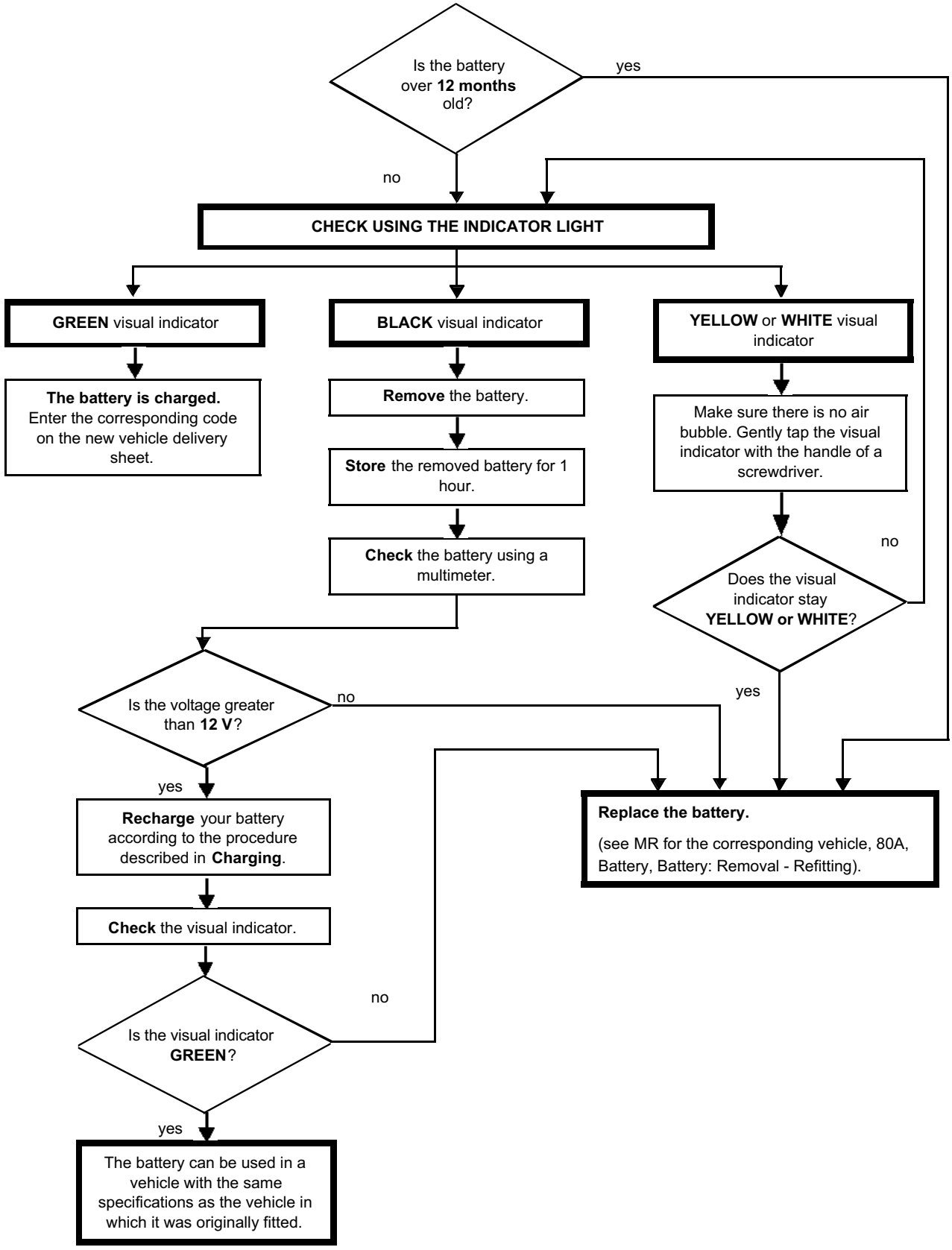

CLAIM COMPLETION AND CODING

- Labour time:

Further battery recharge
– Operation code: **8210**
– Allocated time: **0.3 hours**

Battery replacement
– Operation code: **8207**
– Time allowed: **See Labour Time**

- Faulty part to be indicated: part number of the battery (if replaced).
  Or faulty labour time code to be indicated: recharging the battery (if recharging).

Reminder of precautions before disconnecting the batteries:

For all vehicles:

Wait for at least 1 minute between switching the ignition off and disconnecting the battery, to enable the computers systems to go to standby.

Wait for the engine cooling fan to stop completely.

Reminder of the initialisations to be carried out after reconnecting the batteries:

Vehicle	Initialisations after reconnection
Twingo - Clio II - Scénic I, Mégane I, Espace III, Kangoo	**Set the time on the clock.** **Enter the four-digit radio code.**
Avantime	**Set the time on the clock.** **Enter the four-digit radio code.** **Check that the one-touch control electric windows are still initialised.** The windows should open and close without stopping. If this is not the case, fully close the window which rises a few centimetres at a time and press the control button for **2 seconds** once the window is fully closed.
Trafic - Master - Master propulsion	**Set the time on the clock.** **Enter the four-digit radio code.** **Clear the electric chronotachograph fault codes** (contact the specialist network).
Espace IV sunroof	**Set the time on the clock.** **Enter the four-digit radio code.** **Check that the one-touch control electric windows are still initialised.** The windows should open and close without stopping. If this is not the case, fully close the window which rises a few centimetres at a time and press the control button for **2 seconds** once the window is fully closed. **Check that the sunroof is still initialised.** It should open or close to the required position without stopping. If this is not the case, it must be reinitialised (see **Window mechanism initialisation, Procedure 1**).

Vehicle	Initialisations after reconnection
Espace IV fixed glass roof	**Set the time on the clock.** **Enter the four-digit radio code.** **Check that the one-touch control electric windows are still initialised.** The windows should open and close without stopping. If this is not the case, fully close the window which rises a few centimetres at a time and press the control button for **2 seconds** once the window is fully closed. **Check that the sunroof is still initialised.** It should open or close to the required position without stopping. If this is not the case, it must be reinitialised (see **Window mechanism initialisation, Procedure 2**).
Mégane II, Scénic II	**Set the time on the clock.** Use the satellite radio control to set the time on a clock equipped with a navigation system: ● Press and hold the left-hand Source key for 2 seconds to access time setting mode (the hours will flash). ● Press the + or - keys to adjust the hour. ● Press the left-hand Source key to switch to setting the minutes (the minutes will flash). ● Press the + or - keys to adjust the minutes. ● Press the left-hand Source key to exit setting mode. **Enter the four-digit radio code.** **Initialisation of the electric power-assisted steering:** with the engine running, turn the steering wheel a quarter turn to the left and then a quarter turn to the right, and bring back the steering wheel to the centre point with the wheels set straight ahead. **Check that the one-touch control electric windows are still initialised.** The windows should open and close without stopping. If this is not the case, fully close the window which rises a few centimetres at a time and press the control button for **2 seconds** once the window is fully closed. **Check that the sunroof is still initialised.** It should open or close to the required position without stopping. If this is not the case, it must be reinitialised (see **Window mechanism initialisation, Procedure 3**).
Laguna II, Vel Satis	**Set the time on the clock.** **Enter the four-digit radio code.** **Enter the four-digit video system code.** **Check that the one-touch control electric windows are still initialised.** The windows should open and close without stopping. If this is not the case, fully close the window which rises a few centimetres at a time and press the control button for **2 seconds** once the window is fully closed. **Check that the sunroof is still initialised.** It should open or close to the required position without stopping. If this is not the case, it must be reinitialised (see **Window mechanism initialisation, Procedure 4**).

Vehicle	Initialisations after reconnection
Modus	**Set the time on the clock.** **Enter the four-digit radio or radionavigation code**. To set the time on the radionavigation system, enter the four-digit code, insert the navigation CD-ROM and then drive the vehicle so that it can pick up satellite signals. Setting the time will then be possible. Initialise the electric power-assisted steering (see **MR 387 Fault finding, 36B, Electric power-assisted steering configurations and programming**). The other computers are automatically initialised when the vehicle is being driven. **Drive the vehicle for** at least 1 minute at a speed greater than 18 mph (30 km/h) so that the tyre pressures are displayed again. **Check that the one-touch control electric windows are still initialised.** The windows should open and close without stopping. If this is not the case, fully close the window which rises a few centimetres at a time and press the control button for **2 seconds** once the window is fully closed. **Check that the sunroof is still initialised.** It should open or close to the required position without stopping. If this is not the case, it must be reinitialised (see **Window mechanism initialisation, Procedure 4**).
Clio III	**Set the time on the clock.** **Enter the four-digit radio or radionavigation code**. To set the time for the radionavigation system, enter the four-digit code, insert the navigation CD-ROM and then drive the vehicle so that it can pick up satellite signals. Setting the time will then be possible. **Check that the one-touch control electric windows are still initialised.** The windows should open and close without stopping. If this is not the case, fully close the window which rises a few centimetres at a time and press the control button for **2 seconds** once the window is fully closed. **Check that the sunroof is still initialised.** It should open or close to the required position without stopping. If this is not the case, it must be reinitialised (see **Window mechanism initialisation, Procedure 3**).

INITIALISATION OF THE WINDOW MECHANISMS

PROCEDURE 1	Initialisation of the window mechanisms

NOTES	**Before starting the initialisation, read through the whole procedure**

Start the vehicle.

↓

Position the sunroof switch in the roof and sunblind closed position (switch turned fully to the left).

After having turned the sunroof switch, is the anti-pinch function triggered (the sunroof moves forwards and then back again by several centimetres)?

YES → **Wait for at least 10 seconds** before continuing with the procedure.

NO ↓

Are the sunroof and sunblind open?

NO → **Press and hold the switch.**
Wait for the 'clacking' noise of the motor switching* then release the switch.
Promptly press the switch again and keeping pressing until the roof and the sunblind open and close completely. The roof will not usually move straight away, there is normally a delay of 5 seconds.

YES ↓

Press and hold the switch.
The roof moves back to the closed position a few centimetres at a time, without the anti-pinch function; keep pressing on the control so that the sunblind is also initialised (non-continuous movement without anti-pinch for the sunroof and continuous movement for the sunblind). **Wait for the 'clacking' noise of the motor switching*** then release the switch.
Promptly press the switch again and keeping pressing until the roof and the sunblind open and close completely. The roof will not usually move straight away, there is normally a delay of **5 seconds**.

↓

A

* The switching noise corresponds to the noise the sunroof makes at the point when it reaches its closing stop and then moves back by approximately one millimetre.

PROCEDURE 1 CONTINUED	

A

Release the switch.

Wait for **at least 5 seconds** before checking the initialisation (see Procedure 5)

IMPORTANT
Wait **at least 5 seconds** before carrying out another initialisation procedure. If the procedure is interrupted during the cycle, start again from the beginning, otherwise the sunroof will no longer operate.

INITIALISATION OF THE WINDOW MECHANISMS

PROCEDURE 2	Initialisation of the window mechanisms

NOTES	**Before starting the initialisation, read through the whole procedure**

Start the vehicle.

↓

Position the sunblind switch in sunblind closed position (switch turned completely to the left).

After having turned the sunblind switch, is the anti-pinch function triggered (the sunblind moves forwards and then back again by several centimetres)?

YES → **Wait for at least 10 seconds** before continuing with the procedure.

NO ↓

Is the sunblind open?

NO → **Press and hold the switch.**
Wait for the 'clacking' noise of the motor switching* then release the switch.
Promptly press the switch again and keeping pressing until the sunblind opens and closes completely. The sunblind will not usually move straight away, there is normally a delay of **5 seconds**.

YES ↓

Press and hold the switch.
The sunblind returns to the closed position, moving a few centimetres at a time, without the anti-pinch function. **Wait for the** 'clacking' **noise of the motor switching* then release the switch**.
Promptly press the switch again and keeping pressing until the sunblind opens and closes completely. The sunblind will not usually move straight away, there is normally a delay of **5 seconds**.

↓

A

* The switching noise corresponds to the noise the sunblind makes at the point when it reaches its closing stop and then moves back by approximately one millimetre.

PROCEDURE 2 CONTINUED	

A

Release the switch.

Wait for at least 5 seconds before checking the initialisation (see Procedure 5)

IMPORTANT
Wait at least 5 seconds before carrying out another initialisation procedure. If the procedure is interrupted during the cycle, start again from the beginning, otherwise the sunroof will no longer operate.

INITIALISATION OF THE WINDOW MECHANISMS

PROCEDURE 3	Initialisation of the window mechanisms

NOTES	**Before starting the initialisation, read through the whole procedure**

Start the vehicle.

↓

Position the sunroof switch in the roof closed position (switch turned fully to the left).

After having turned the sunroof switch, is the anti-pinch function triggered (the sunroof moves forwards and then back again by several centimetres)?

YES → **Wait for at least 10 seconds** before continuing with the procedure.

NO ↓

Is the sunroof open?

NO → **Press and hold the switch.**
Wait for the 'clacking' **noise of the motor switching* then release the switch**.
Promptly press the switch again and keeping pressing until the roof opens and closes completely. The roof will not usually move straight away, there is normally a delay of **5 seconds**.

YES ↓

Press and hold the switch.
The roof returns to the closed position, moving a few centimetres at a time, without the anti-pinch function.
Wait for the 'clacking' **noise of the motor switching* then release the switch**.
Promptly press the switch again and keeping pressing until the roof opens and closes completely. The roof will not usually move straight away, there is normally a delay of **5 seconds**.

↓

A

* The switching noise corresponds to the noise the sunroof makes at the point when it reaches its closing stop and then moves back by approximately one millimetre.

PROCEDURE 3 CONTINUED	

A

Release the switch.

Wait for at least 5 seconds before checking the initialisation (see Procedure 5).

IMPORTANT
Wait **at least 5 seconds** before carrying out another initialisation procedure. If the procedure is interrupted during the cycle, start again from the beginning, otherwise the sunroof will no longer operate.

INITIALISATION OF THE WINDOW MECHANISMS

PROCEDURE 4	Initialisation of the window mechanisms

NOTES	**Before starting the initialisation, read through the whole procedure**

Start the vehicle.

↓

Position the sunroof switch in the maximum tilt position (switch turned fully to the left).

↓

Is the sunroof in maximum tilt position?

NO → **Press and hold the switch.**
The roof returns to the closed position, then to the maximum tilt position, moving a few centimetres at a time, without the anti-pinch function.
Wait for the 'clacking' **noise of the motor switching* then release the switch**.
Promptly press the switch again and keeping pressing until the roof opens and closes completely. The roof will not usually move straight away, there is normally a delay of **5 seconds**.

YES

↓

Press and hold the switch.
Wait for the 'clacking' **noise of the motor switching* then release the switch**.
Promptly press the switch again and keeping pressing until the roof opens and closes completely. The roof will not usually move straight away, there is normally a delay of **5 seconds**.

↓

Release the switch.

↓

Wait for at least 5 seconds before checking the initialisation (see Procedure 5)

IMPORTANT
Wait at least 5 seconds before carrying out another initialisation procedure. If the procedure is interrupted during the cycle, start again from the beginning, otherwise the sunroof will no longer operate.

* The switching noise corresponds to the noise the sunroof makes at the point when it reaches its closing stop and then moves back by approximately one millimetre.

PROCEDURE 5	

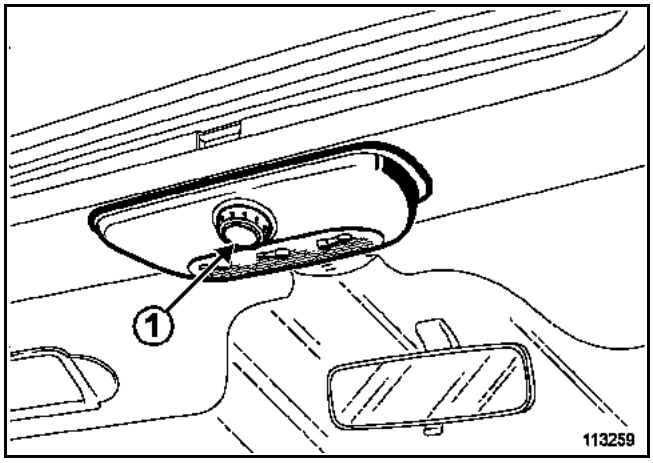

INITIALISATION CHECK

1 Start the engine.
2 Move the sunroof switch (**1**) (or the sunblind switch, depending on the vehicle equipment) to the maximum open position.
3 Wait until the sunroof (or the sunblind) is completely open.
4 Turn the sunroof (or sunblind) switch to the closed position.
5 Wait until the sunroof (or the sunblind) is completely closed.
6 Turn the engine off.

If the opening and closing have proceeded correctly (without triggering the anti-pinch function), the sunroof (or sunblind) is initialised.

If not, start the initialisation procedure again.

CHARGING EQUIPMENT TO BE USED

It is essential to use a constant voltage charger as mentioned in the list of specialist equipment selected by Renault.

The charging voltage must be between **14.8 and 16 V**.

Depending on the type of battery, the charge must always be confirmed by the visual indicator:

IMPORTANT
It is essential to disconnect the **two terminals** of the battery before beginning charging.
If the battery is not disconnected, the charging voltage indicated damages the electronic circuits.

CHARGING BATTERIES WITH A VISUAL INDICATOR

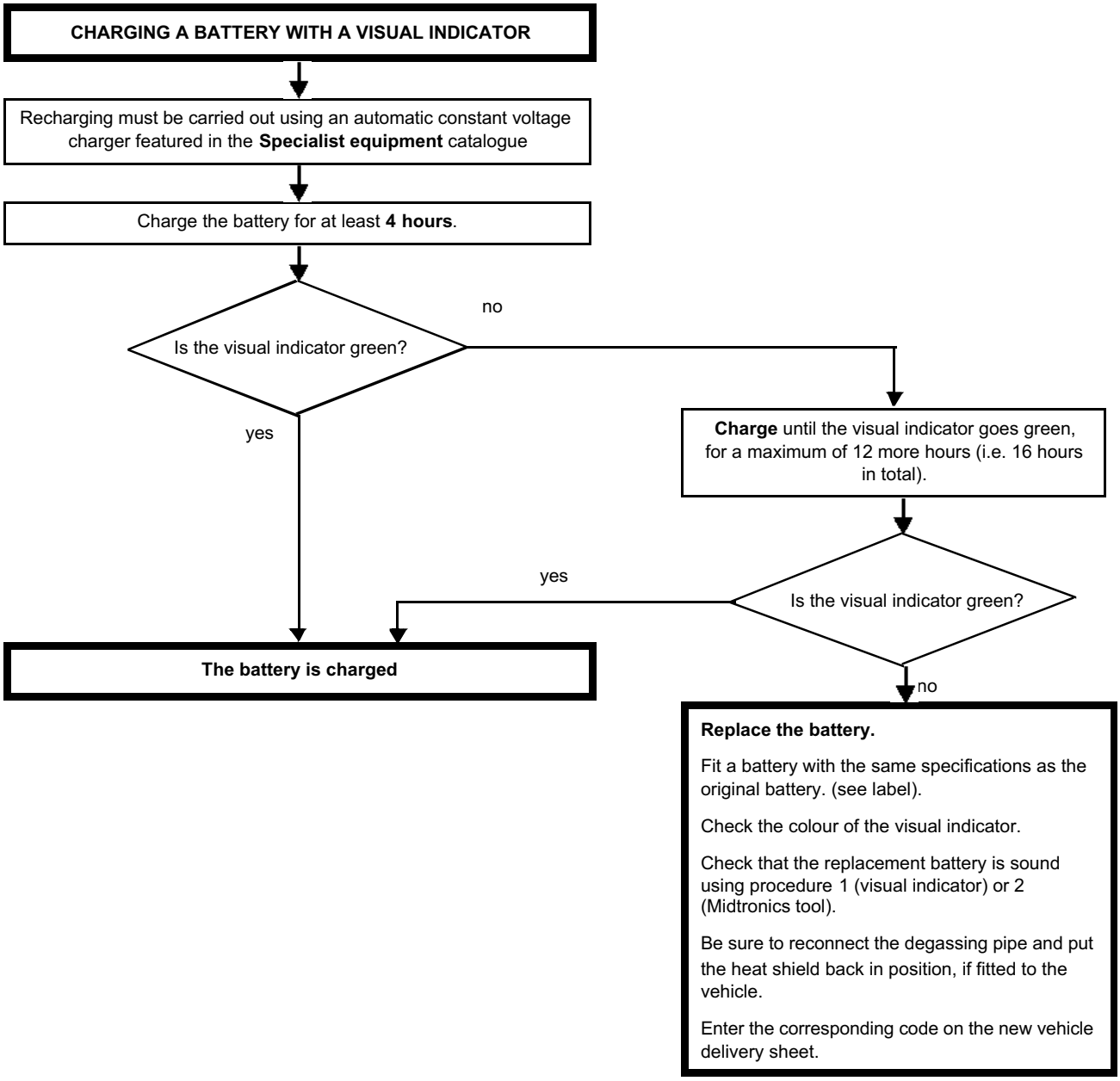

MEGANE

Technical Note 3690A

KM0B - KM0C - KM0F - KM0G - KM0H - KM0J - KM0O - KM0U - KM02

Basic manual: Workshop Repair Manual 364

Special notes on Mégane Estate

77 11 319 162 Edition 4 - NOVEMBER 2005 EDITION ANGLAISE

"The repair procedures given by the Manufacturer in this document are based on the technical specifications current when it was prepared.

The procedures may be modified as a result of changes introduced by the manufacturer in the production of the various component units and accessories from which his vehicles are constructed."

All rights reserved by RENAULT s.a.s.

Copying or translating, in part or in full, of this document or use of the service part reference numbering system is prohibited without the prior written authority of RENAULT s.a.s.

© Renault s.a.s. 2005

Contents

Page

01A VEHICLE MECHANICAL SPECIFICATIONS

Engine - Gearbox 01A-1
Dimensions 01A-2

21A MANUAL GEARBOX

Ratios 21A-1

23A AUTOMATIC GEARBOX

Ratios 23A-1

30A GENERAL INFORMATION

Brakes 30A-1
Anti-roll bars: Specifications 30A-2
Front axle tightening torques (in daNm) 30A-3
Front axle values and settings 30A-6
Rear axle values and settings 30A-8
Underbody height 30A-9

35A WHEELS AND TYRES

Specifications 35A-1

37A MECHANICAL COMPONENT CONTROLS

Control lever 37A-1
Control cables 37A-2

Page

81A REAR LIGHTS

Rear light 81A-1
Connection 81A-2
Registration plate light 81A-3
High-level brakelight 81A-4

85A WIPERS - WASHERS

Rear screen wiper 85A-1
Rear screen wiper motor mechanism 85A-3

86C RADIO

Aerial 86C-1

87C OPENING ELEMENTS MANAGEMENT

Rear screen opening switch 87C-1
Tailgate opening switch 87C-2
Tailgate lock 87C-3
Keyless vehicle: Tailgate lock connection 87C-4
Fuel filler flap locking motor 87C-5

88C AIRBAG AND PRETENSIONER

Rear pyrotechnic seat belt retractor 88C-1
Side curtain airbag 88C-3

Vehicle type	Engine		Cubic capacity (cm^3)	Gearbox type
	Type	Suffix		
KM0B	K4J	730	1398	JH3
KM0C	K4M	760	1598	JH3
		761		DP0
KM0F	K9K	722	1461	JR5
KM0G	F9Q	800	1870	ND0
KM0H	K4J	730	1398	JH3
KM0J	K4M	760	1598	DP0
		761		DP0
KM0L	F9Q	804	1870	ND0
KM0U	F4R	770	1998	ND0
		771		DP0
KM0Y	K4M	764	1598	JH3
KM00	F9Q	808	1870	ND0
KM02	K9K	728	1461	JR5
		729		DP0
KM1A	K4J	730	1398	JH3
KM1B	K4M	760	1598	JH3
		761		DP0
KM1D	F9Q	804	1870	ND0
KM1G	F9Q	800	1870	ND0
KM1M	F4R	770	1998	ND0
		771		DP0
KM1N	F4R	770	1998	ND0
		771		DP0

VEHICLE IDENTIFICATION

Example: **KM00**

K : Type of bodywork

K : Estate

M : Project code

00 : Engine suffix

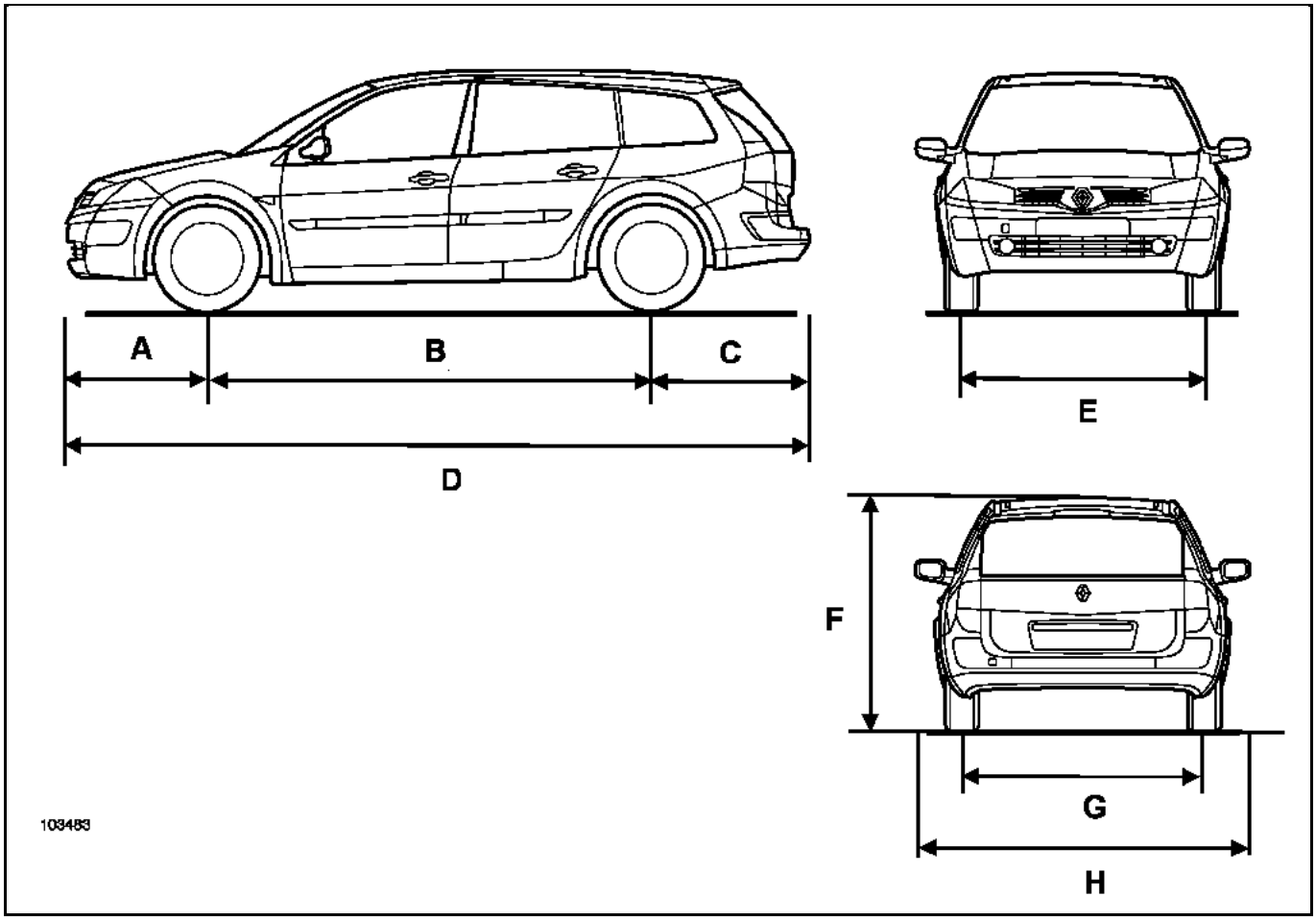

Dimensions in metres

A	0.842
B	2.686
C	0.972
D	4.500
E	1.518
F (unladen)	1.467
G	1.514
H	1.777

	JH3		JR5		ND0			
Suffix	105	142	102	108	001	008	014	016
Cylinder torque	14/59	15/61	15/56	15/56	15/58	14/57	16/70	14/57
First	11/41	11/41	11/41	11/41	13/41	13/41	13/41	14/49
Second	21/43	21/43	21/43	21/43	19/34	19/34	18/35	18/35
Third	28/39	28/39	28/37	28/37	31/37	31/37	28/39	28/39
Fourth	31/34	31/34	35/34	35/34	40/34	40/34	36/38	36/38
Fifth	37/33	37/33	41/31	42/31	3447/31	47/31	52/45	52/45
Sixth	-	-	-	-	50/27	50/27	56/41	56/41
Reverse gear	11/39	11/39	11/39	11/39	37/38	37/38	37/38	37/38

DP0

X84, K84, K9K, DP0		
Suffix	**Deceleration**	**Final drive**
046	52/67	20/73
047	52/67	21/73
049	52/67	21/73
050	52/67	21/73
051	52/67	23/70
052	52/67	21/73
053	52/67	20/73
054	52/67	20/73

For removing and refitting the gearbox (see **MR 364 Mechanical systems, 23 A, Automatic transmission, Automatic transmission: Removal - Refitting.**)

	Engines of all types
FRONT BRAKE (mm)	
Piston diameter	54
Disc diameter	280
Thickness of discs	24
Minimum disc thickness (1)	21.8
Maximum disc run-out	0.07
Thickness of brake pads (including mounting)	18
Minimum thickness of brake pads (including mounting)	6
REAR BRAKE (mm)	
Piston diameter	34
Disc diameter	270
Thickness of discs	10
Minimum disc thickness (1)	6.5
Maximum disc run-out	0.07
Thickness of brake pads (including mounting)	16
Minimum thickness of brake pads (including mounting)	6
MASTER CYLINDER (mm)	
Diameter	23.8
Stroke	36

(1) Brake discs cannot be repaired. If they are too heavily worn or are scratched they must be replaced.

Brake fluid conforms with **SAE J 1703 DOT 4** standards. For optimum braking, RENAULT recommends a brake fluid with low viscosity in cold conditions (maximum **750 mm^2/s** at **-40°C**).

I - FRONT AXLE

Bar diameter (mm)	Marking
20	Yellow

II - REAR AXLE

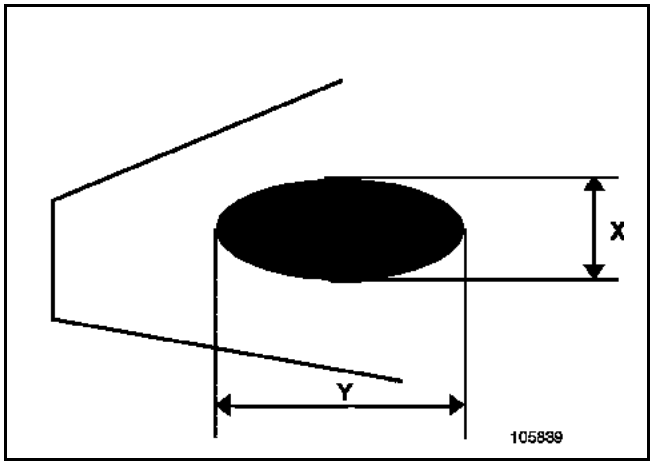

F4R or F9Q and K9K / DPO

Bar dimension (mm)
X: 15.7
Y: 41.3

K4J or K4M and K9K / JR5

Bar dimension (mm)
X: 15.9
Y: 38

Tightening torques (in daNm) for the front axle

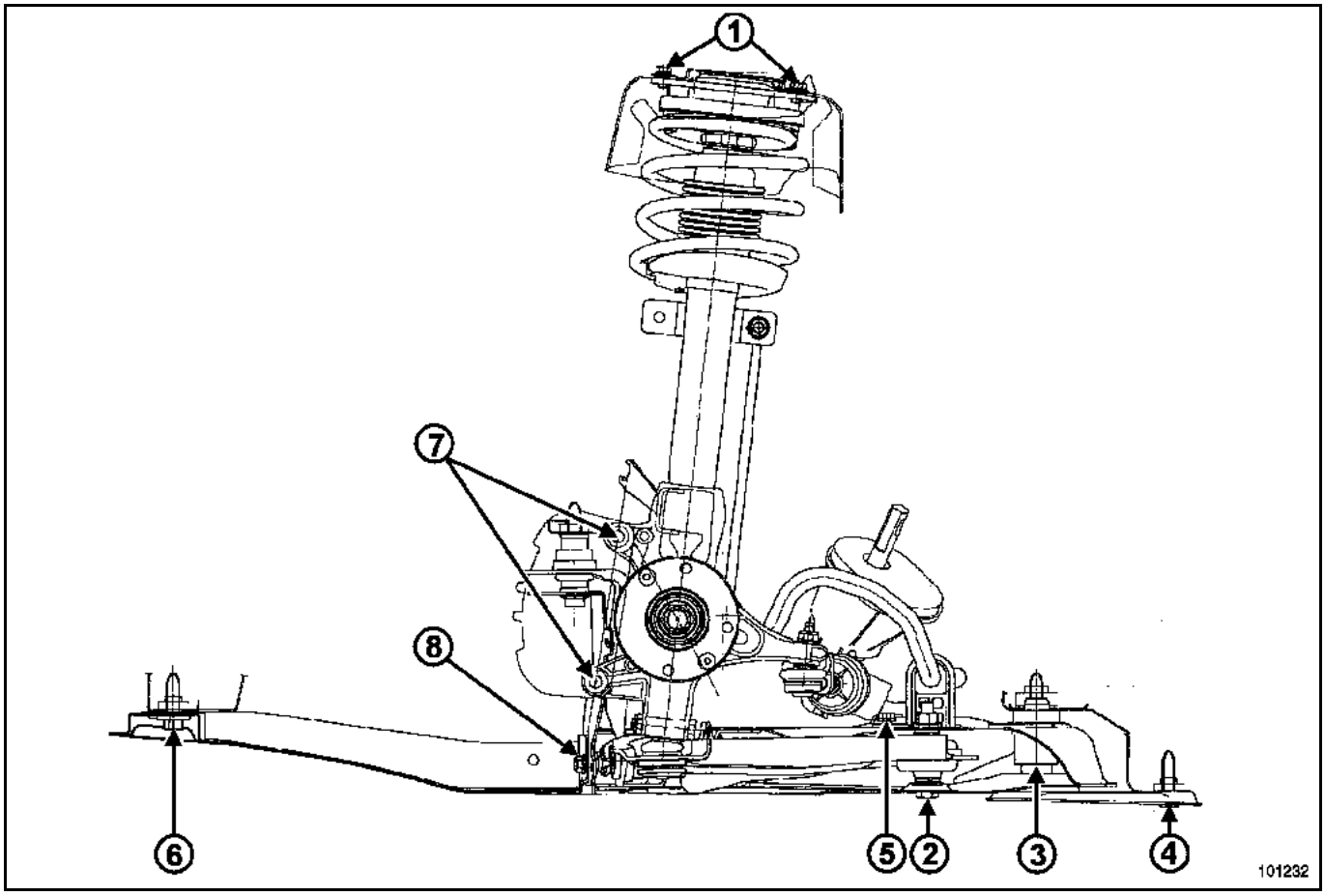

	Tightening torques	
(1)	bolt attaching "spring and shock absorber" assembly to body	2.1 daNm
(2)	lower arm bolt	7 daNm
(3)	sub-frame stud bolt	10.5 daNm
(4)	rear cross member bolt	6.2 daNm
(5)	bolt attaching anti-roll bar mounting to sub-frame	2.1 daNm
(6)	radiator cross member front mounting bolt	10.5 daNm
(7)	calliper mounting bolt	10.5 daNm
(8)	radiator cross member rear mounting nut	2.1 daNm
	bolt attaching steering rack mounting to sub-frame	10.5 daNm

Tightening torques (in daNm) for the front axle

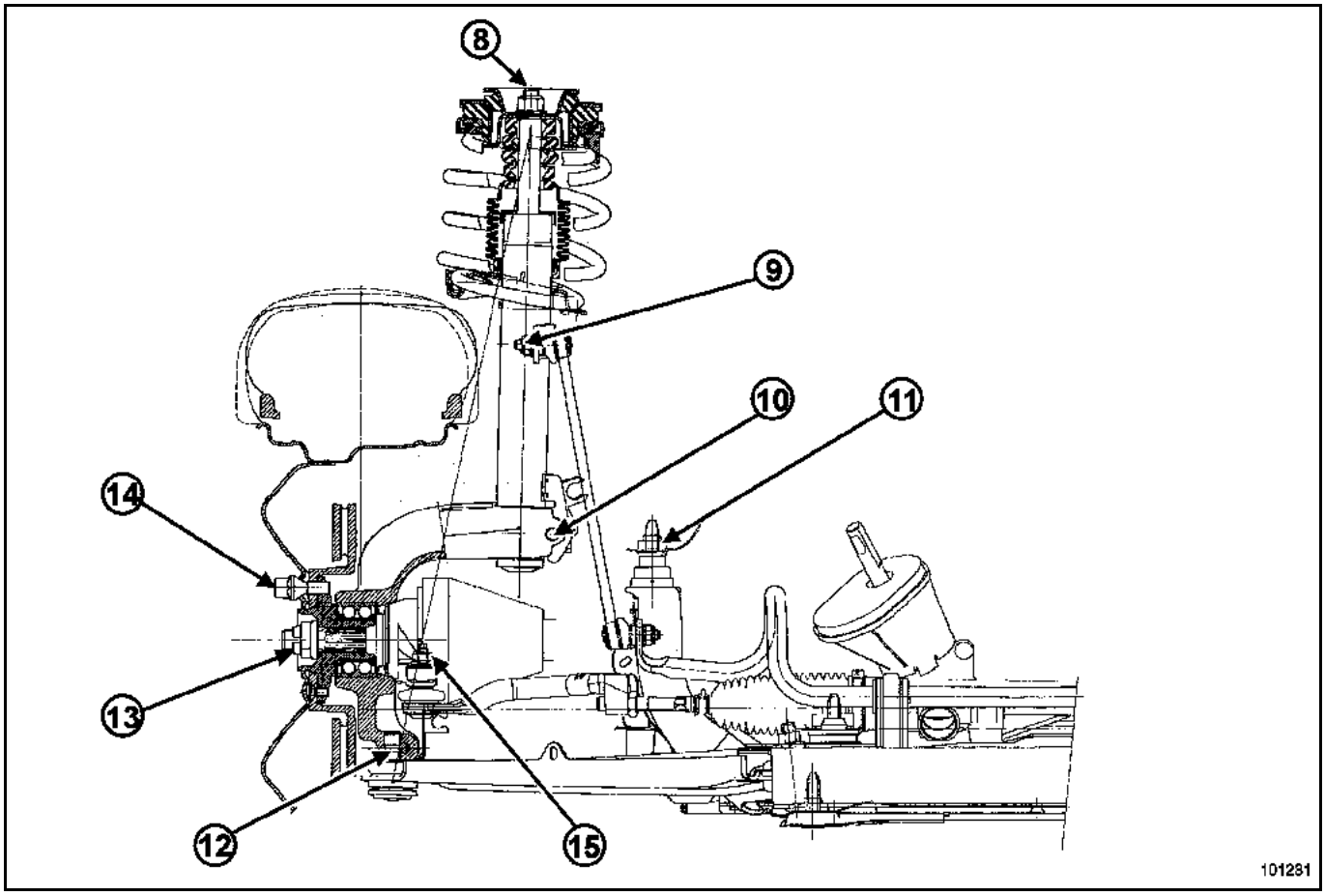

	Tightening torques	
(8)	shock absorber nut	6.2 daNm
(9)	anti-roll bar reduction gearing linkage ball joint nut	4.4 daNm
(10)	base of the shock absorber bolt	10.5 daNm
(11)	sub-frame tie-rod bolt	10.5 daNm
(12)	lower arm ball joint bolt	6 daNm
(13)	driveshaft nut	28 daNm
(14)	wheel bolt	11 daNm
(15)	track rod end nut	3.7 daNm
	side stiffener mounting bolt on the radiator cross member	2.1 daNm

Tightening torques (in daNm) for the rear axle

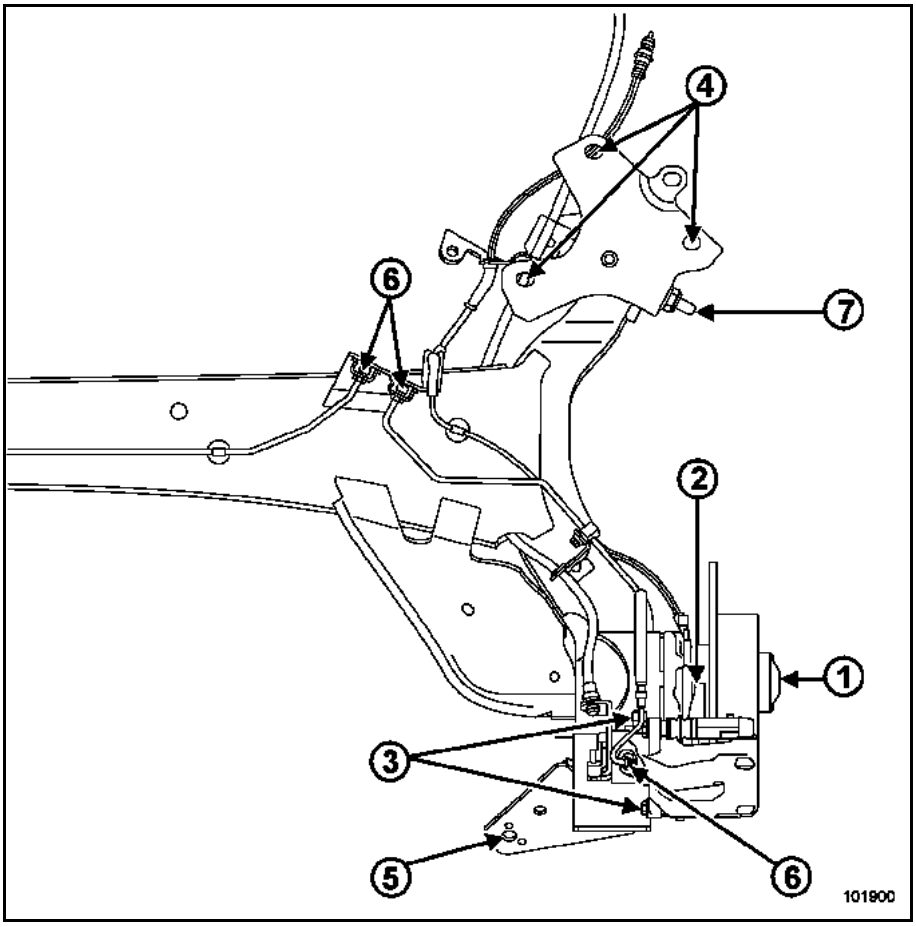

	Tightening torques	
(1)	stub-axle nut	22 daNm
(2)	calliper mounting bolt	10.5 daNm
(3)	Pillar bolt	3.6 daNm
(4)	bearing mounting bolt	6.2 daNm
(5)	shock absorber lower mounting bolt	10.5 daNm
	shock absorber upper mounting bolt	6.2 daNm
(6)	brake pipe nut	1.4 daNm
(7)	bearing and rear axle mounting bolt nut	12.5 daNm
	under-rear axle protection mounting bolt	0.8 daNm

WARNING
If adjusting the running gear, program the torque and steering wheel angle sensor with the fault finding tool (see "fault finding manual").

I - CASTOR

Not adjustable.

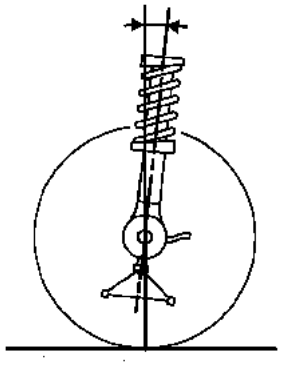

Values	Position of front axle (mm)
4°30' ± 30'	W2 - W1 = 94
5°06' ± 30'	W2 - W1 = 75
5°42' ± 30'	W2 - W1 = 62
6°18' ± 30'	W2 - W1 = 46
Maximum right/left difference = 30'	

II - CAMBER

Not adjustable.

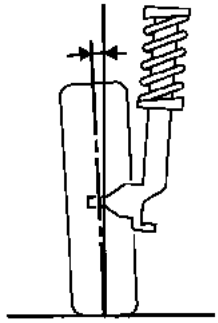

Values	Position of front axle (mm)
0°38' ± 30'	R1 - W1 = 118
- 0°01' ± 30'	R1 - W1 = 125
- 0°12' ± 30'	R1 - W1 = 146
- 0°16' ± 30'	R1 - W1 = 158
Maximum right/left difference = 30'	

III - SWIVEL

Not adjustable.

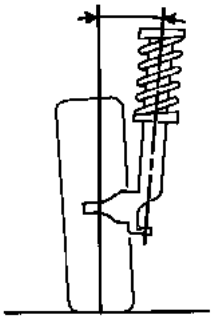

Values	Position of front axle (mm)
10°58' ± 30'	R1 - W1 = 118
11°06' ± 30'	R1 - W1 = 125
11°31' ± 30'	R1 - W1 = 146
11°45' ± 30'	R1 - W1 = 158
Maximum right/left difference = 30'	

IV - WHEEL ALIGNMENT

Adjustable by rotating the track rod sleeves.

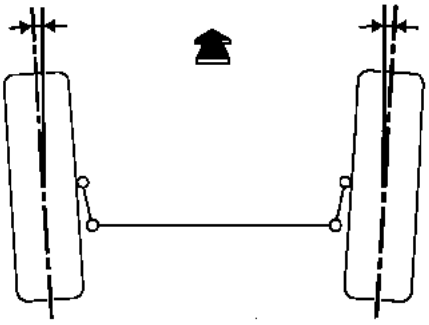

Values	Position of front axle (mm)
(For two wheels) toe-out 0°10' ± 10' 15-inch wheel rims: 1.1 mm ± 1.1 mm 16-inch wheel rims: 1.2 mm ± 1.2 mm 17-inch wheel rims: 1.3 mm ± 1.3 mm	Unladen

V - POSITION FOR TIGHTENING RUBBER BUSHES

For tightening rubber bushes, see Section **31A "Front axle"** in Workshop Repair Manual **364**.

I - CAMBER

Not adjustable.

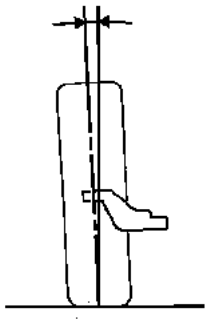

Values	Position of rear axle
- 1°30' ± 20'	Unladen

II - WHEEL ALIGNMENT

Not adjustable.

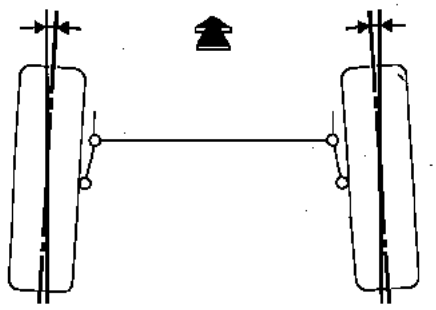

Values	Position of rear axle
(For two wheels) Toe-in - 0°40' ± 20' 15-inch wheel rims: - 4.5 mm ± 2.3 mm 16-inch wheel rims: - 4.8 mm ± 2.4 mm 17-inch wheel rims: - 5 mm ± 2.6 mm	Unladen

III - POSITION FOR TIGHTENING RUBBER BUSHES

For tightening rubber bushes, see **33A "Rear axle"** Section in Workshop Repair Manual **364**.

MEASURING POINTS

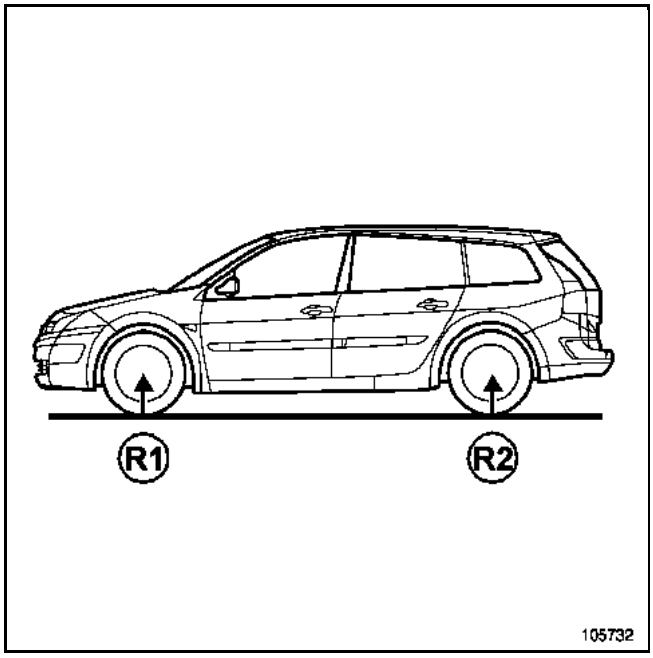

The dimension (**R1**) is measured from the ground to the front wheel axis.

The dimension (**R2**) is measured from the ground to the rear wheel axis.

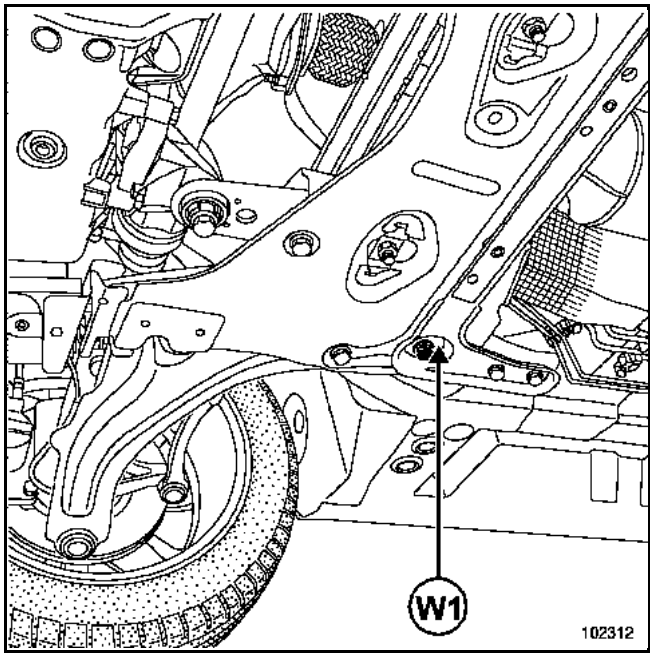

The dimension (**W1**) is measured from the ground to the underside of the sub-frame rear cross member mounting bolt head.

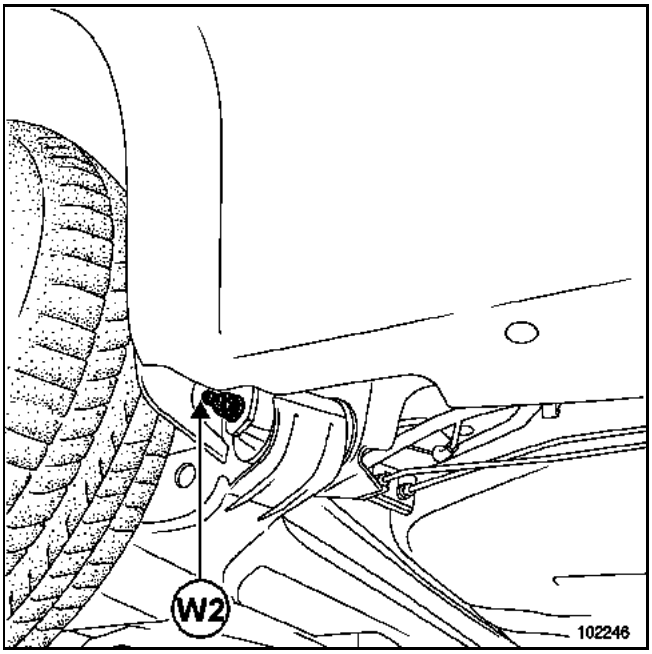

The dimension (**W2**) is measured from the ground to the mounting axis of the rubber bush on the bearing.

I - INFLATION

Inflation pressure when cold (in bar), during fully loaded use and/or on motorway.

WARNING
If checking the pressure when hot, assume a pressure increase of **0.2** to **0.3 bar** and never deflate the tyres.

Engine	Wheel rim	Tyres	Inflation pressure when cold (in bar)	
			Front	Rear
K4J	6.5 J 15	195/65 R15T	2.2	2
	6.5 J 16*	205/55 R16V	2.2	2
	6.5 J 17*	205/50 R17V	2.2	2
K4M	6.5 J 15	195/65 R15H	2.3	2
	6.5 J 16*	205/55 R16V	2.3	2
	6.5 J 17*	205/50 R17V	2.4	2
K9K	6.5 J 15	195/65 R15T	2.2	2
	6.5 J 16*	205/55 R16V	2.2	2
	6.5 J 17*	205/50 R17V	2.4	2
F4R	6.5 J 15	195/65 R15H	2.4	2
	6.5 J 16*	205/55 R16V	2.4	2
	6.5 J 17*	205/50 R17V	2.5	2
F9Q	6.5 J 15	195/65 R15T	2.4	2
	6.5 J 16*	205/55 R16V	2.4	2
	6.5 J 17*	205/50 R17V	2.5	2

* Alloy wheel rim

The pressure values given are "motorway" values.

II - CONFORMITY CHECK

WARNING
If the size of the tyres changes, check the calibration of the Electric Power Assisted Steering computer: configuration **CF088** using the fault finding tool (refer to the "fault finding manual").

Tightening torque of the **wheel bolts (11 daNm)**.

Maximum rim runout checked on the external diameter of the wheel rim:
– steel wheel rim: **0.8 mm**,
– alloy wheel rim: **0.3 mm**,

Maximum run-out checked on the surface of the wheel rim: **0.7 mm**.

Wheel rim offset:
– steel wheel rim: **45 mm**,
– alloy wheel rim: **49 mm**.

For fitting chains, refer to the "driver's handbook" for the vehicle.

III - SPECIAL FEATURES OF VEHICLES FITTED WITH TYRE INFLATION PRESSURE MONITOR SYSTEMS

The UCH is programmed for each set of four tyres.

The system automatically recognizes the set of tyres fitted to the vehicle.

Tightening torque	
parking brake control mounting nuts	**8 daNm**

REMOVAL

Remove the centre console (see the **Interior equipment** Section).

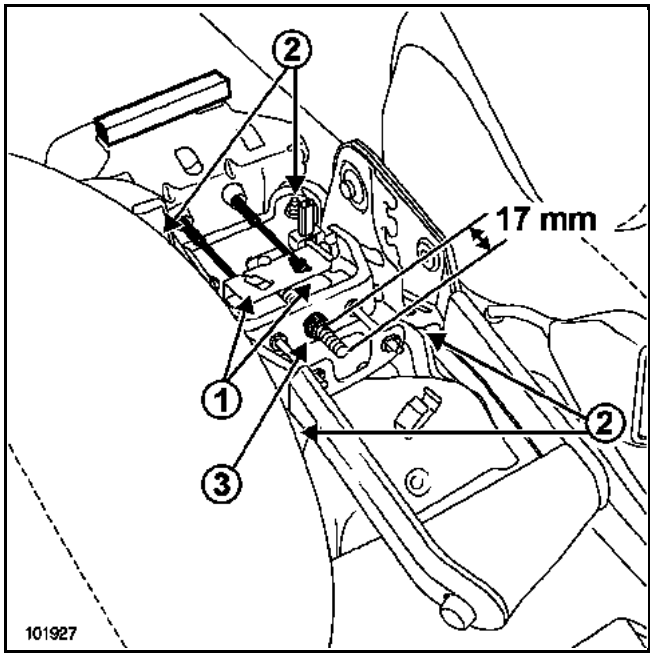

Remove nut (**3**).

Remove the parking brake cables from their housing (**1**).

Remove:
– the parking brake lever mounting nuts (**2**),
– the parking brake lever.

Disconnect the switch.

REFITTING

Note:
The nut (**3**) must be replaced.

Refit:
– the parking brake lever,
– the parking brake lever mounting nuts.

Tighten the **parking brake lever mounting nuts** to the required torque (8 daNm).

Refit the parking brake wiring clip.

Reconnect the parking brake connector.

Refit the parking brake cables at the parking brake lever end.

Refit nut (**3**).

Tighten nut (**3**) to obtain a dimension of (**17 mm**).

Operate the parking brake to activate the adjustment.

Check the stroke of the lever.

Refit the centre console (see the **Interior equipment** Section).

REMOVAL

Put the vehicle on a two-post lift.

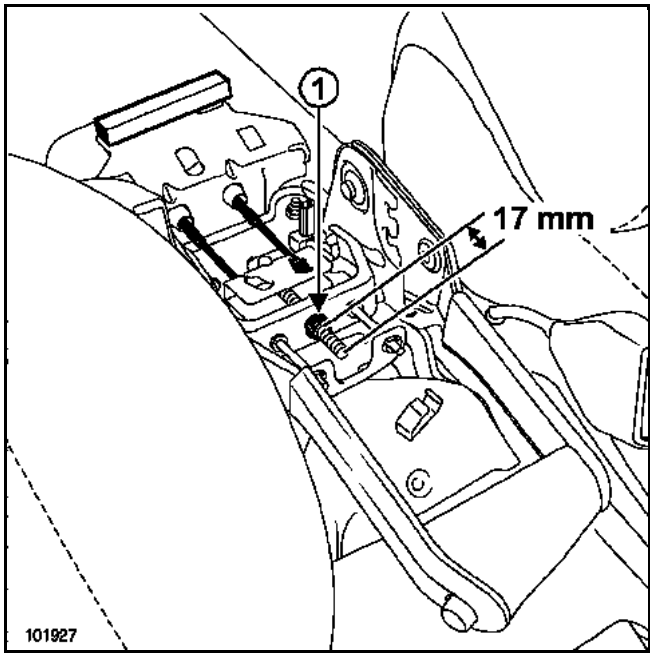

Remove nut (**1**).

Remove the parking brake cables:
- on the parking brake lever side (refer to **Mechanical element controls**, **Control lever** Section).
- on the brake calliper side (refer to **Rear axle** Section).

Remove the parking brake cables from their housing.

REFITTING

Note:
The nut (**1**) must be replaced.

Refit the parking brake cables into their housing.

Note:
When replacing the parking brake cable sheaths, pull the parking brake control several times before adjusting the **17 mm** dimension.

Check the correct positioning of the handbrake cable thrust bearings at the bodywork end.

Refit the parking brake cables:
- on the brake calliper side (refer to **Rear axle** Section).
- on the parking brake lever side (refer to **Mechanical element controls**, **Control lever** Section).

Replace the nut.

Tighten the nut to obtain a dimension of **17 mm**.

Operate the parking brake to activate the adjustment.

Check the stroke of the lever.

REMOVAL

Remove the rear light access flap.

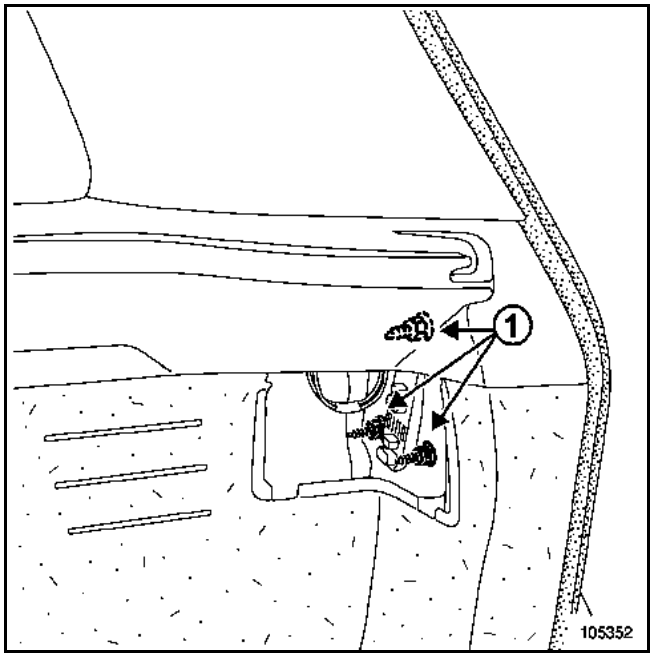

Remove:
– the three nuts (**1**),
– the rear light (partially).

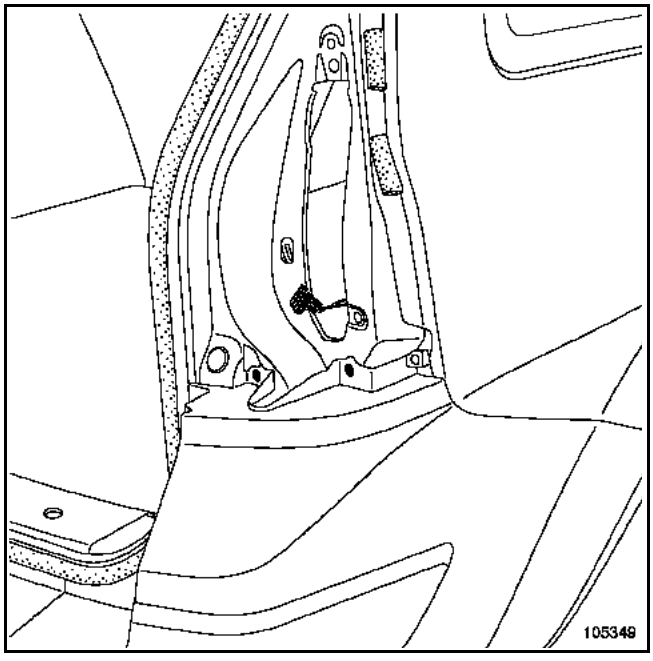

Disconnect the rear light connector.

Remove the rear light.

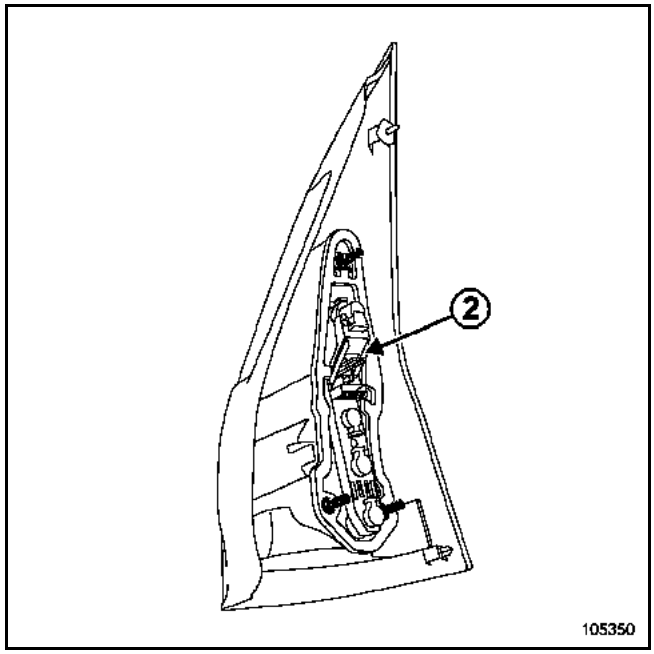

Unclip the bulb mounting by pressing on the tab (**2**) in order to access the bulbs.

REFITTING

Proceed in the reverse order to removal.

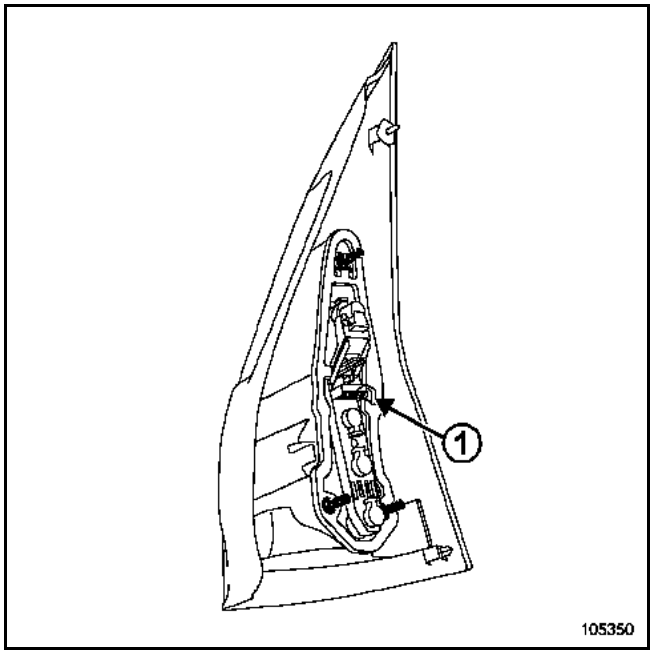

Track	Description
1	Fog light
2	Indicator
3	Earth
4	Side light
5	Reversing light
6	Brake light

Note:
Track numbers are read from right to left.

REMOVAL

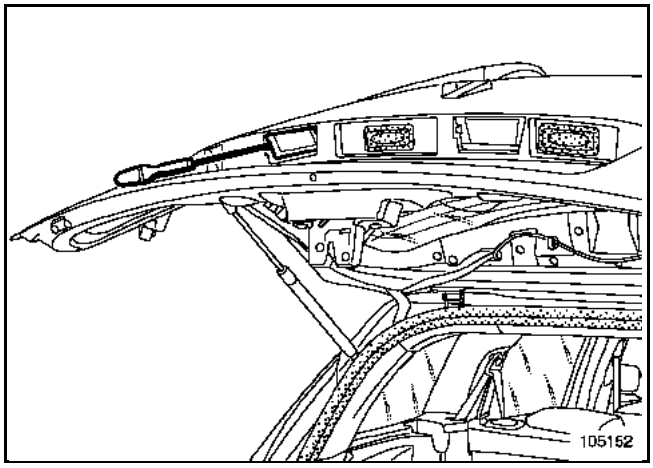

Remove the registration plate light using a flat-blade screwdriver.

Disconnect the connector.

REFITTING

Proceed in the reverse order to removal.

REMOVAL

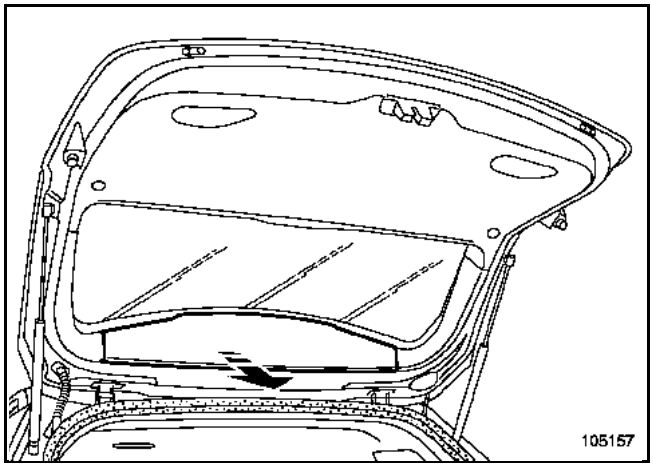

Unclip the central trim.

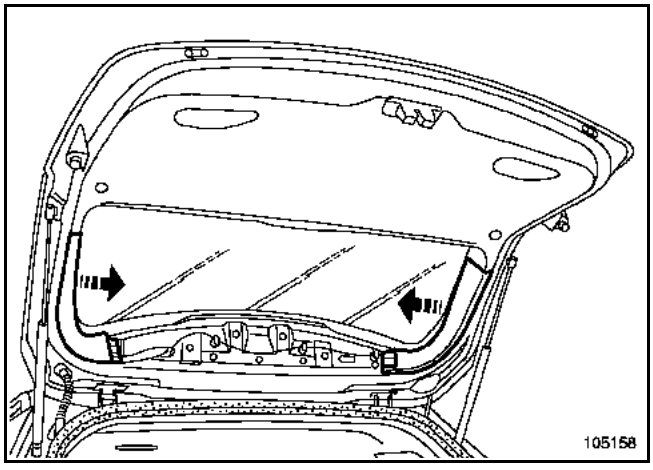

Unclip the side trim panels.

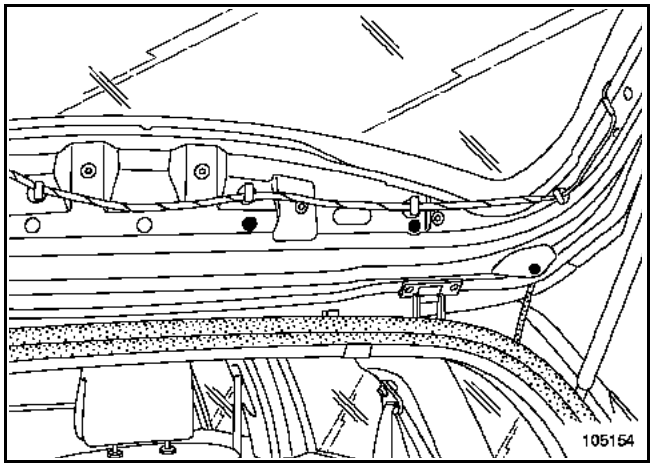

Remove the strut mounting bolts.

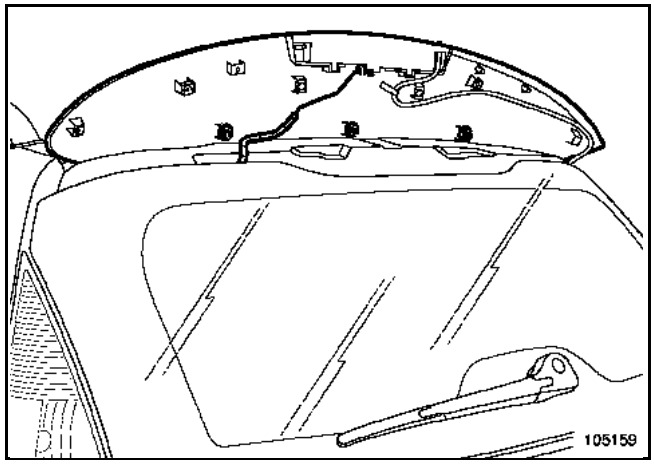

Unclip the strut upwards.

Disconnect the brake light connector.

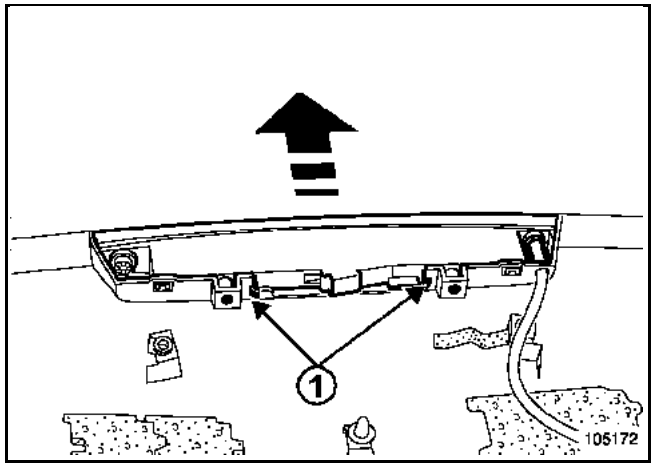

Remove:
– the two bolts,
– the two clips (**1**).

Unclip the jet.

Remove:
– the jet,
– the brake light.

Note:
The vehicles are fitted with a diode-type brake light.

REFITTING

Proceed in the reverse order to removal.

Tightening torques	
wiper arm nut	**1.2 daNm**
motor mounting nuts	**0.8 daNm**

Special tooling required	
Elé. 1781	Tool for removing the rear screen wiper arm

REMOVING THE NON-OPENING REAR SCREEN WIPER MOTOR

Move the rear screen wiper selector switch to put the wiper motor in park position.
– move the selector switch from status 0 to 1.
– move the selector switch from status 1 to 0.

Disconnect the battery (**see MR 364, 80A Battery, Battery: Removal - Refitting**).

Remove the tailgate trim (**see Technical Note 0586A, 73A Non-side opening element trim, Tailgate trim**).

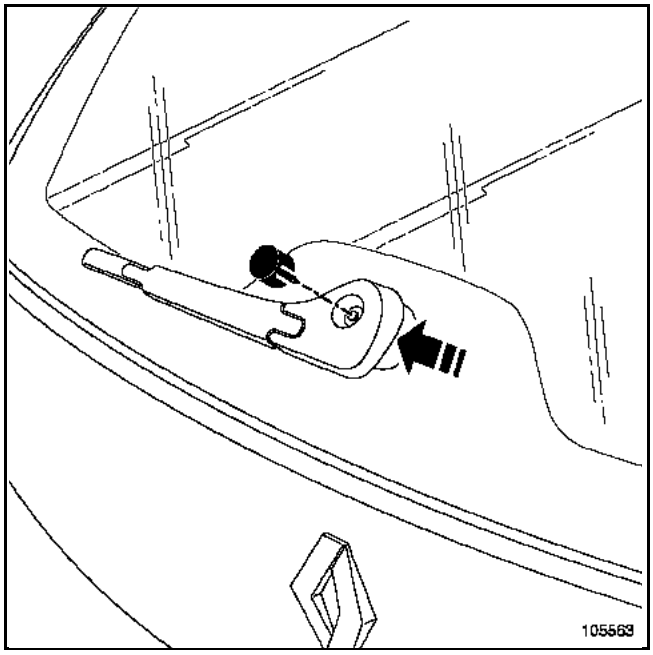

Mark the position of the wiper arm.

Remove:
– the wiper arm nut cover,
– the nut,
– the wiper arm with the **Elé. 1781**.

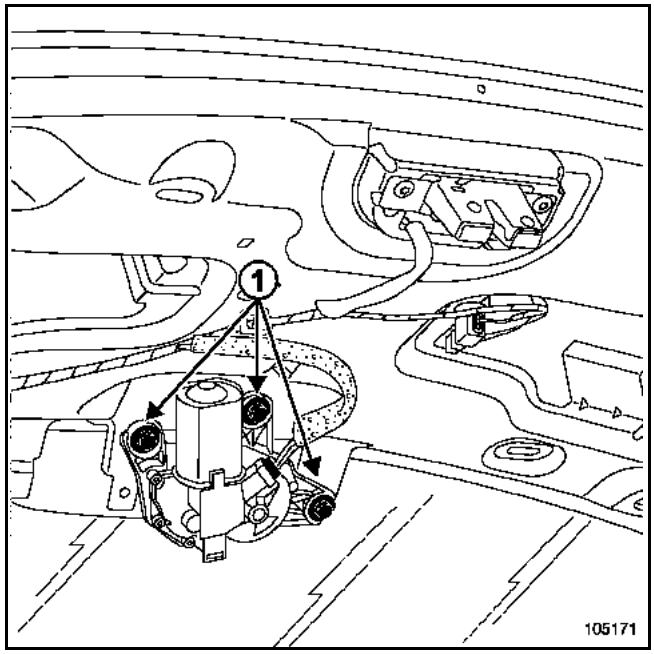

Disconnect the motor connector.

Remove:
– the motor mounting bolts (**1**),
– the motor.

REFITTING THE NON-OPENING REAR SCREEN WIPER MOTOR

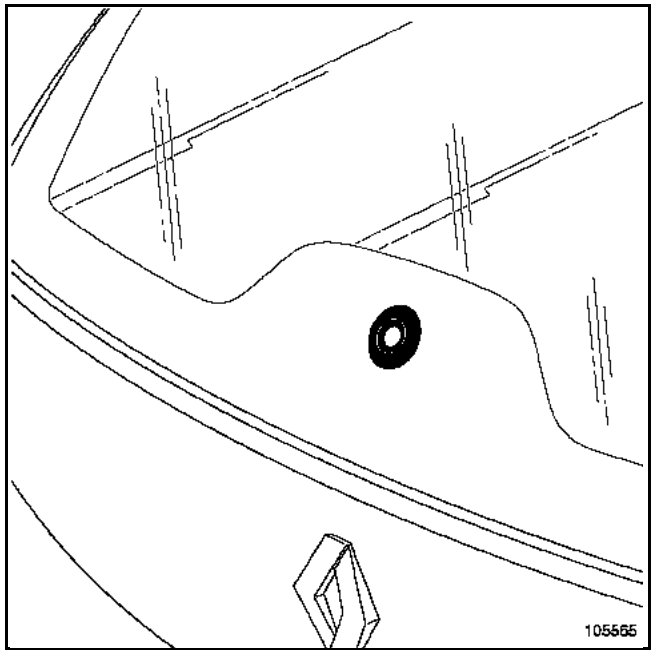

Replace the seal whenever the motor is removed.

Clean the motor shaft splines.

Refit the rear screen wiper motor.

Clean the motor shaft splines.

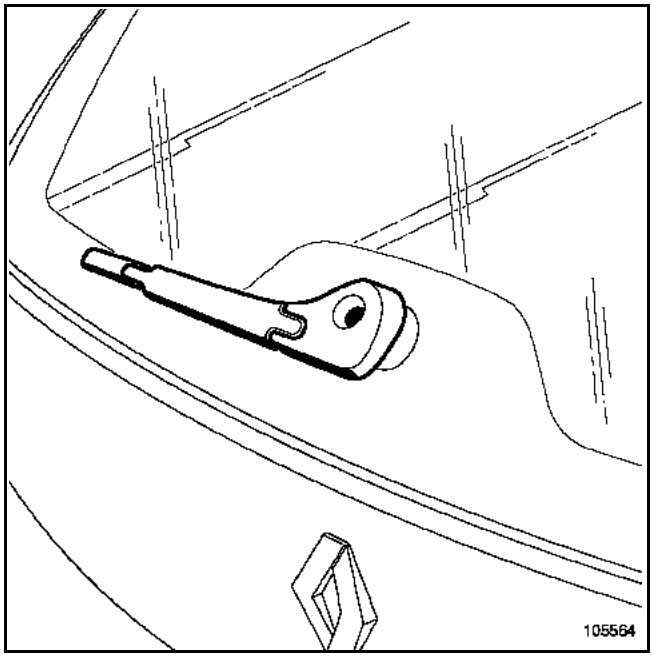

Refit the wiper arm in the position marked before it was removed.

Tighten the wiper arm nut to torque (**1.2 daNm**).

Connect the battery (**see MR 364, 80A Battery, Battery: Removal - Refitting**).

Check that the wiper operates correctly.

REMOVING THE NON-OPENING REAR SCREEN WIPER MOTOR

Move the rear screen wiper selector switch to put the wiper motor in park position.
– move the selector switch from status 0 to 1.
– move the selector switch from status 1 to 0.

Disconnect the battery (**see MR 364, 80A Battery, Battery: Removal - Refitting**).

Remove the tailgate trim (**see Technical Note 0586A, 73A Non-side opening element trim, Tailgate trim**).

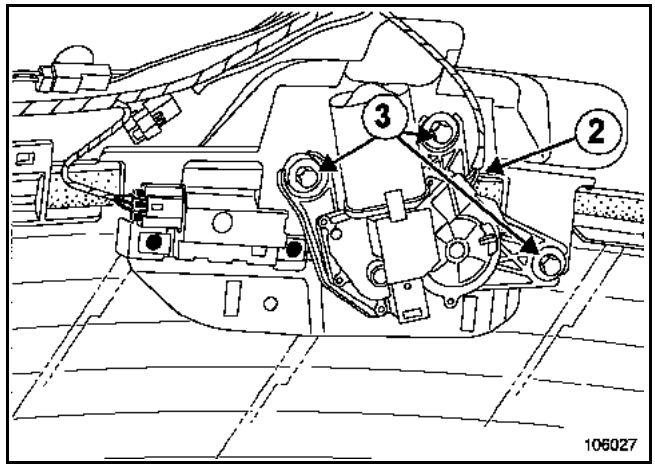

Disconnect the connector (**2**).

Remove:
– the motor mounting bolts (**3**),
– the motor.

REFITTING THE NON-OPENING REAR SCREEN WIPER MOTOR

Refit the wiper motor.

Tighten the motor mounting bolts to torque (**0.8 daNm**).

Connect the connector.

Refit the tailgate trim (**see Technical Note 0586A, 73A Non-side opening element trim, Tailgate trim**).

Connect the battery (**see MR 364, 80A Battery, Battery: Removal - Refitting)**.

Check that the wiper operates correctly.

Tightening torques	
wiper arm nut	**1.2 daNm**
mechanism external nut	**0.65 daNm**
mechanism internal nut	**0.45 daNm**

Special tooling required	
Elé. 1781	Tool for removing the rear screen wiper arm

REMOVAL

Move the rear screen wiper selector switch to put the wiper motor in park position.
– move the selector switch from status 0 to 1.
– move the selector switch from status 1 to 0.

Disconnect the battery (**see MR 364, 80A Battery, Battery: Removal - Refitting**).

Remove the tailgate trim (**see Technical Note 0586A, 73A Non-side opening element trim, Tailgate trim**).

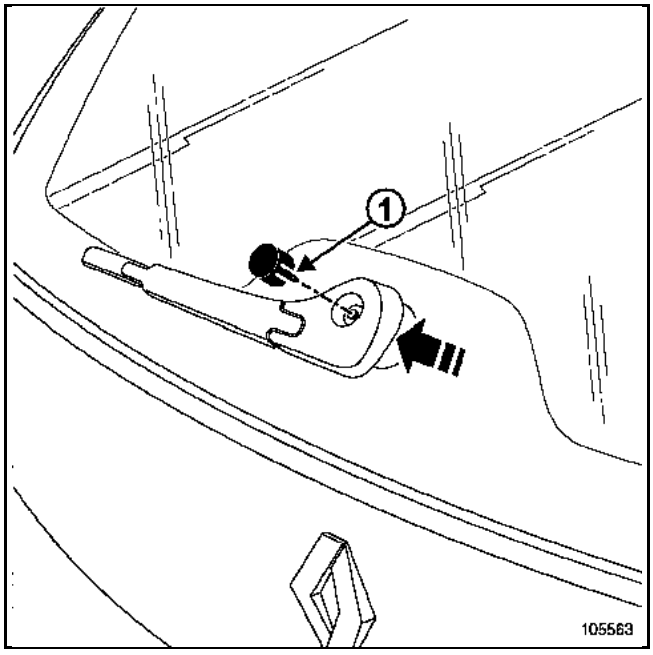

Remove:
– the wiper arm nut cover,
– the nut,
– the wiper arm with the **Elé. 1781**.

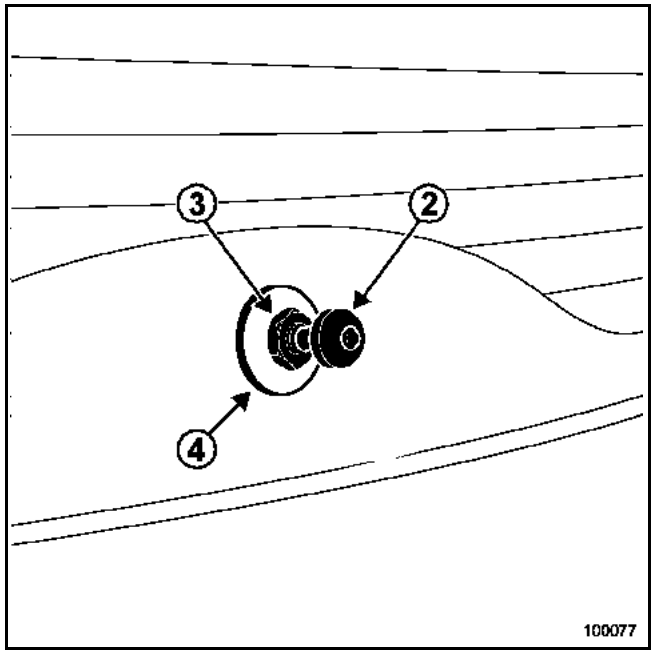

Remove:
– the nut cap (**2**),
– the nut (**3**),
– the trim (**4**).

Open the rear screen.

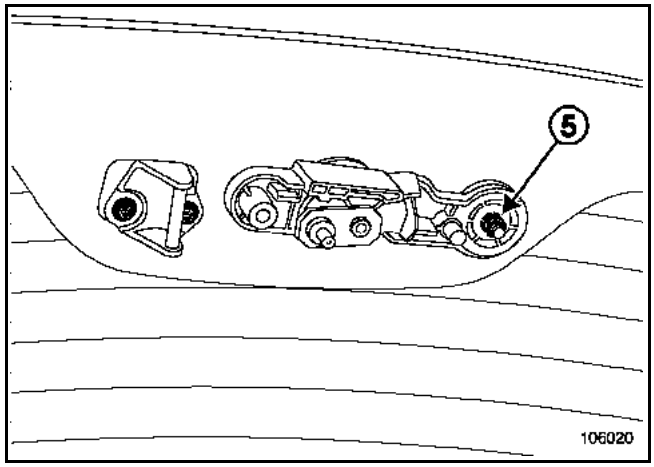

Remove:
– the nut (**5**),
– the mechanism.

REFITTING

> **NOTE**
> When replacing the opening rear screen, it is essential to check the opening clearances before following the procedure (see **General information**).

Adjusting the wiper mechanism

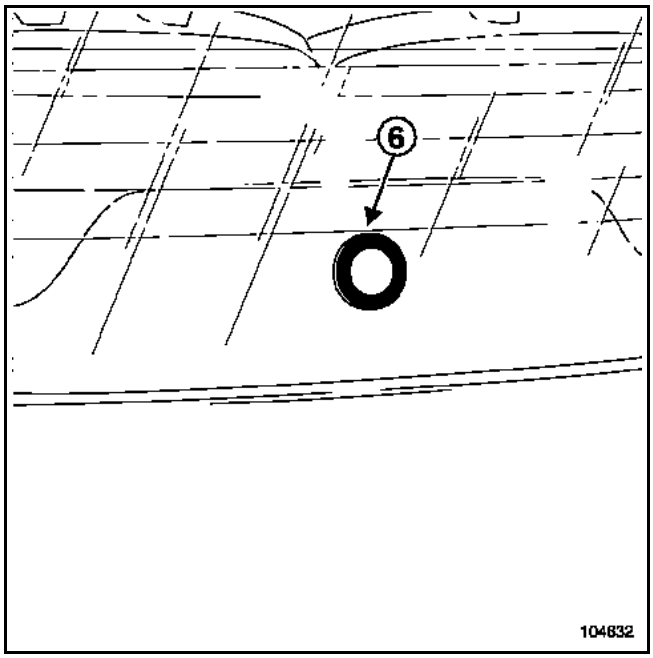

The seal (6) must be replaced.

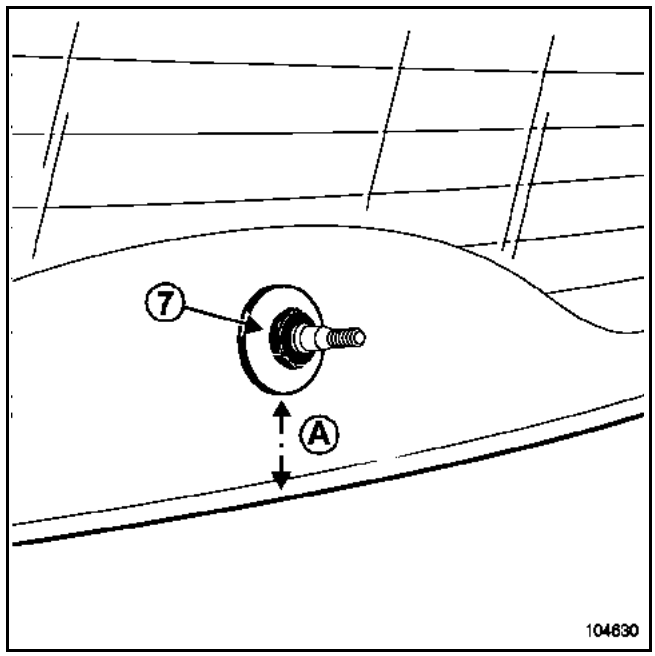

Position the mechanism, observing the **63 mm** measurement (**A**) between the trim and the edge of the rear screen.

Partially tighten the nut (**7**).

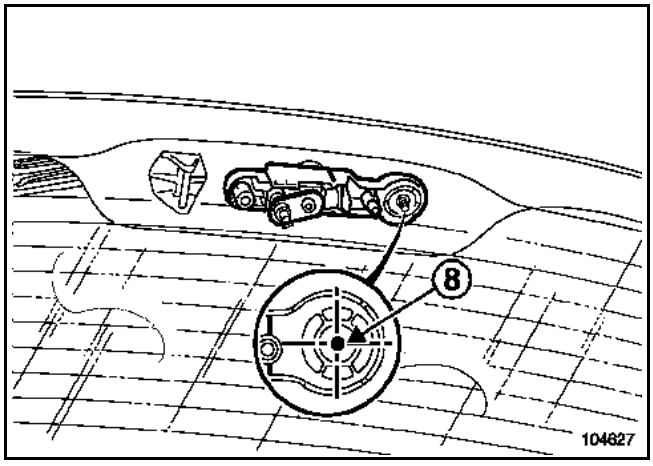

Centre the mechanism in relation to the mounting bolt (**8**).

Torque tighten:
– nut (**7**) to **0.65 daNm**,
– nut (**8**) to **0.45 daNm**.

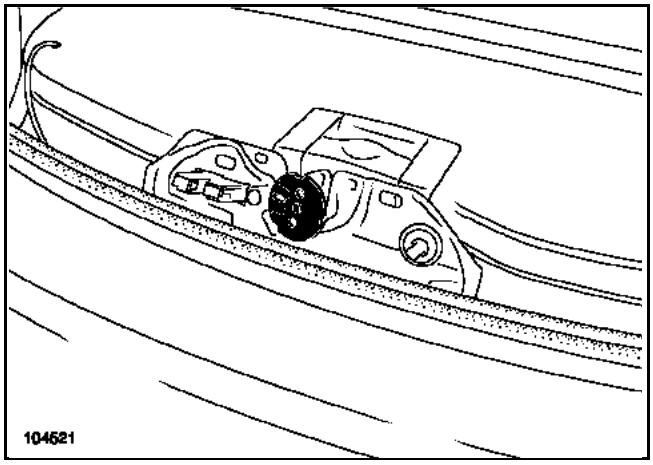

Note:
Close the opening rear screen (the mechanism is positioned on the motor plate).
Operate the rear screen wiper to engage the mechanism on the motor plate.

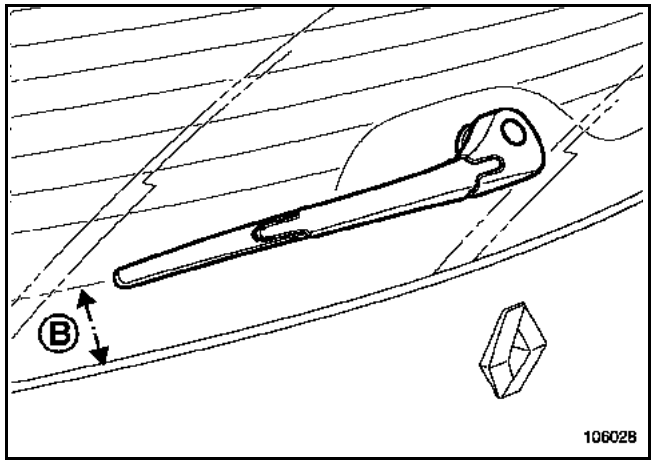

Clean the motor shaft splines.

Position the wiper arm **46 mm** (measurement **B**) away from the edge of the rear screen.

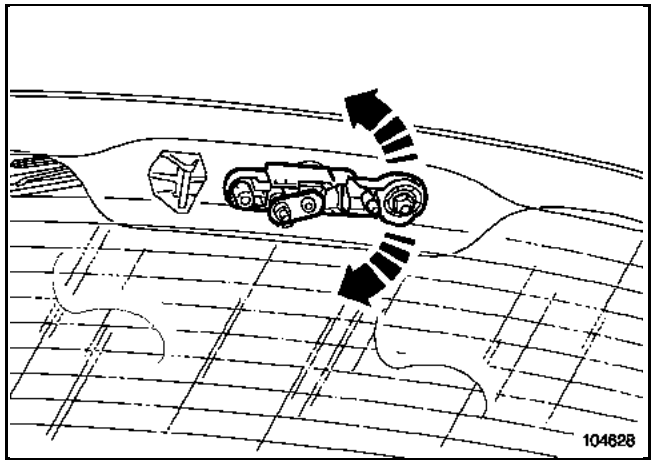

Note:
The wiper arm adjustment can be refined by pressing the mechanism as shown in the illustration above.

REMOVAL

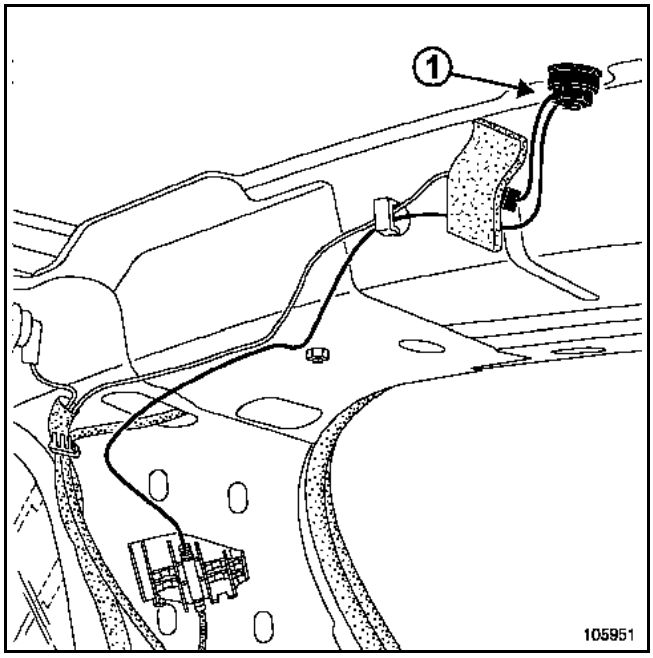

Remove the headlining (see Section **71A** of **MR 365**).

Remove the mounting nut (**1**).

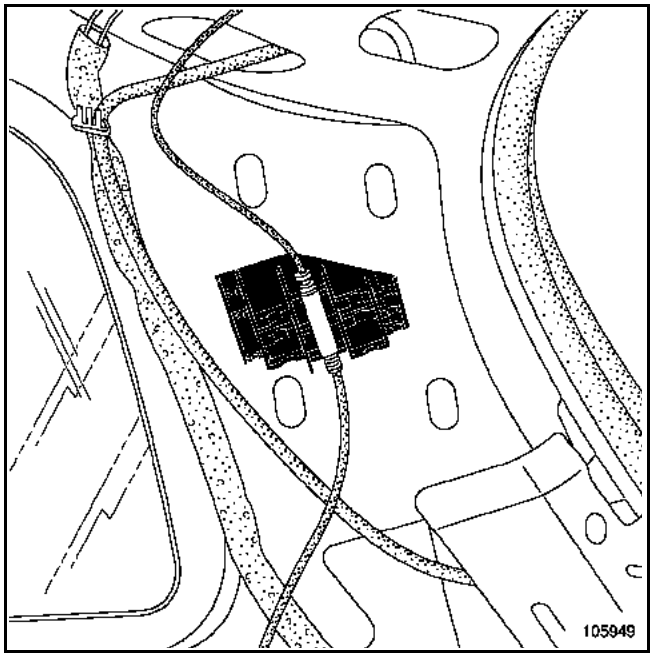

Disconnect the aerial cable from its support.

REFITTING

Proceed in the reverse order to removal.

REMOVAL

Note:
It is not necessary to remove the tailgate moulding to perform this operation.

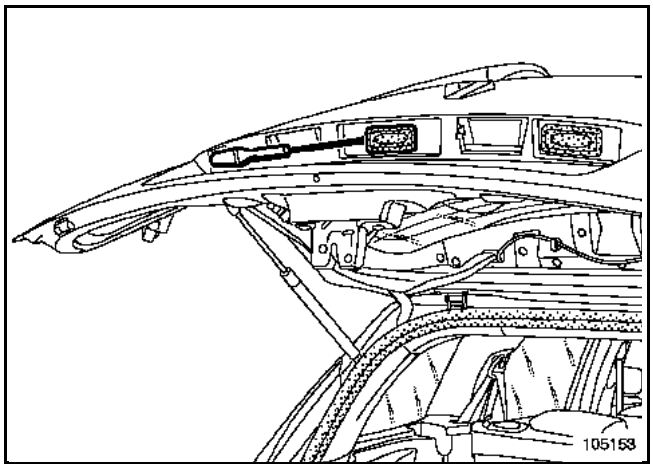

Protect the edge of the opening control with masking tape.

Unclip the control with a flat-blade screwdriver.

Disconnect the connector.

REFITTING

Proceed in the reverse order to removal.

CONNECTION

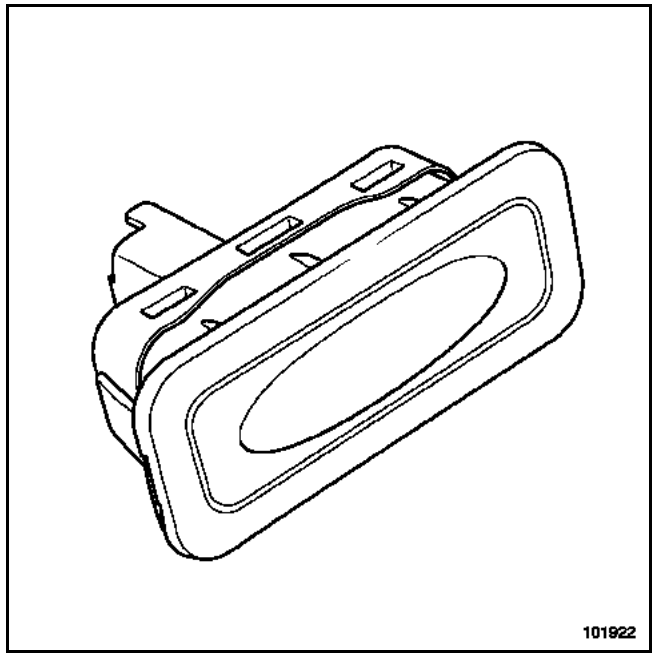

Track	Description
1	Earth
2	Opening control

Note:
The tailgate opening control is a unipolar switch.
The opening control can be checked with an ohmmeter.

REMOVAL

Note:
It is not necessary to remove the tailgate moulding to perform this operation.

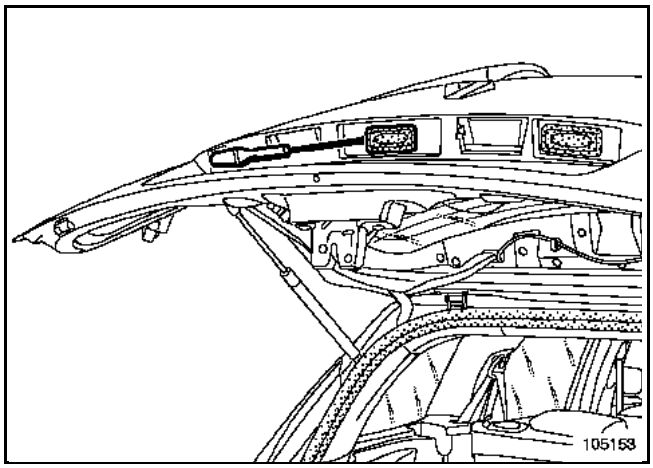

Protect the edge of the opening control with masking tape.

Unclip the control with a flat-blade screwdriver.

Disconnect the connector.

REFITTING

Proceed in the reverse order to removal.

CONNECTION

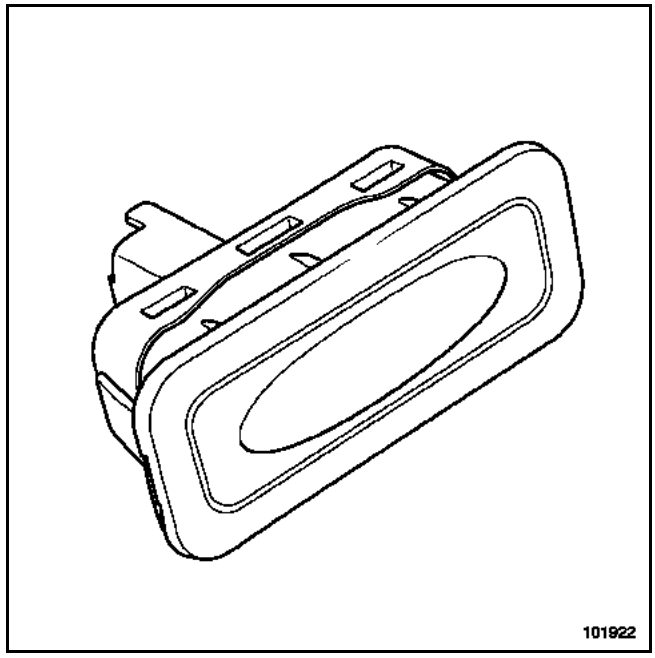

Track	Description
1	Opening control
2	Earth

Note:
The tailgate opening control is a unipolar switch.
The opening control can be checked with an ohmmeter.

REMOVAL

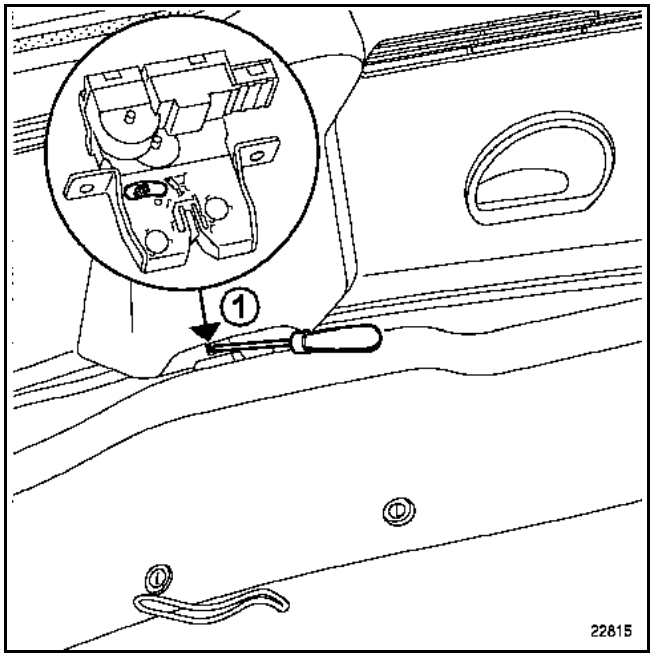

Note:
If there is an electrical fault, the tailgate can be opened manually.
Unlock the tailgate lock by pushing tab (**1**) with a screwdriver.
This operation is performed from inside the vehicle.

Disconnect the battery, starting with the negative terminal.

Remove the tailgate trim (see Section **73A** of Technical Note **586A**).

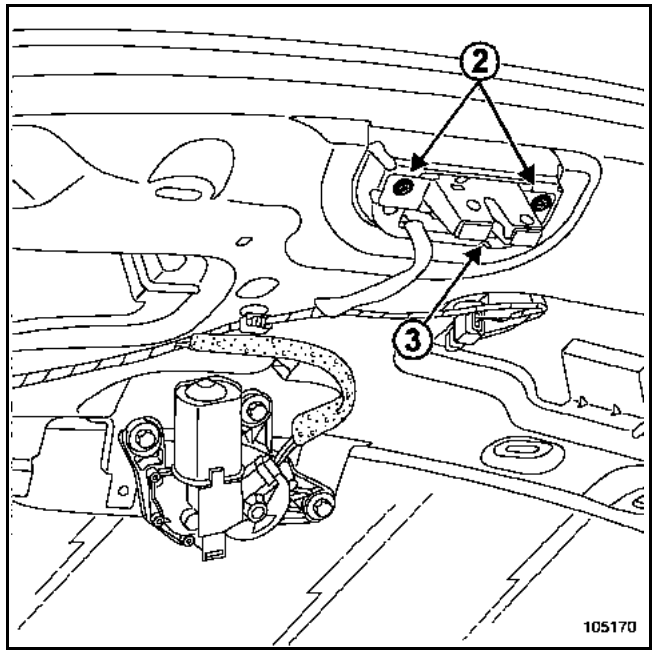

Remove screws (**2**).

Press clip (**3**).

Remove the lock.

Disconnect the connector from the lock.

REFITTING

NOTE
Connect the battery; carry out the necessary programming (see the **Battery** Section.)

Proceed in the reverse order to removal.

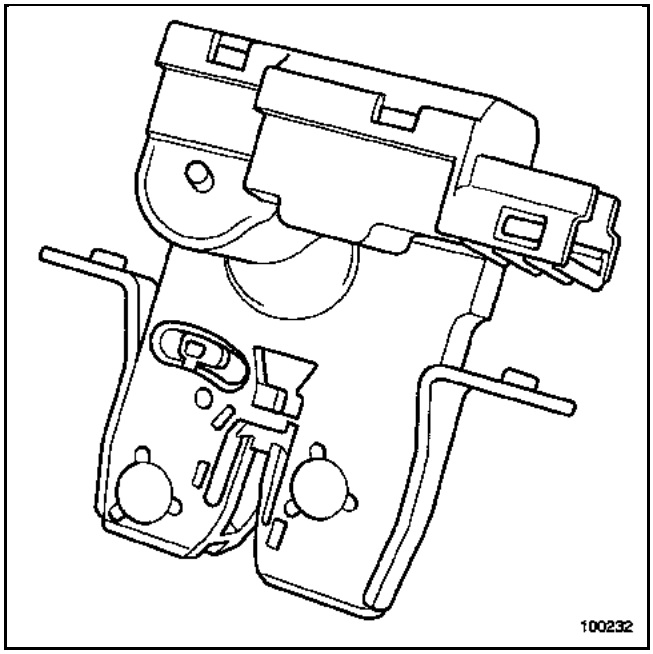

Track	Description
1	Motor supply
2	Motor supply
3	Opening sensor (body flange sensor)
4	Earth

Note:
The tailgate opening control is a unipolar switch.
The opening control can be checked with an ohmmeter.

REMOVAL

Fuel filler flap locking/unlocking is controlled simultaneously with the driver's door.

Remove the right-hand wheel arch liner (see Section **71A** of Technical Note **586A**).

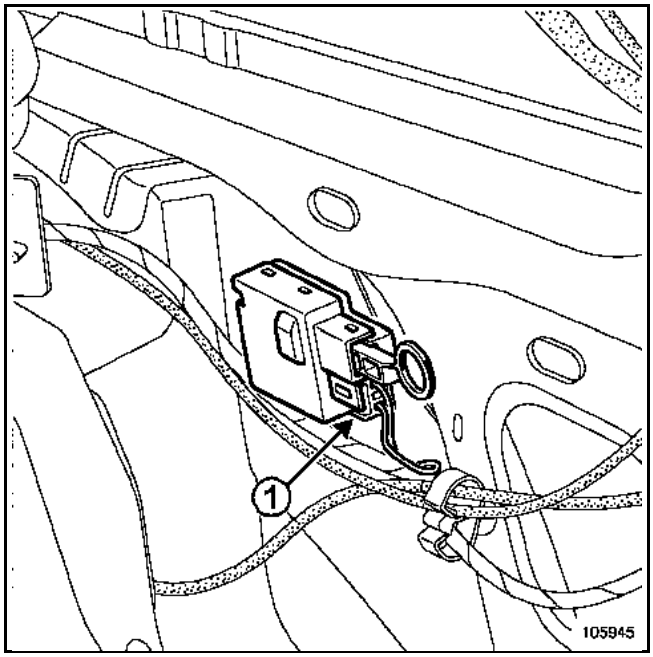

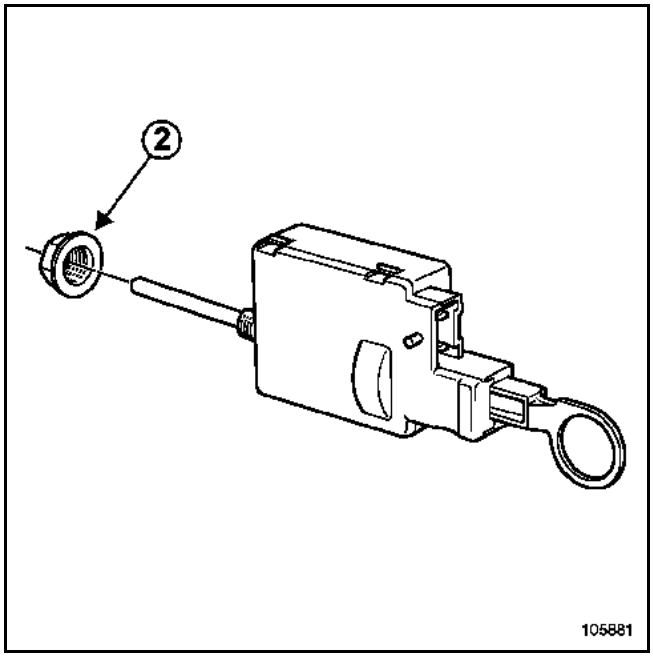

Note:
If there is an electrical fault, the motor can be activated manually.

Remove:
- the fuel filler flap motor connector (**1**),
- the motor mounting nut (**2**) (to the left of the flap in the outer wheel arch),
- the motor.

REFITTING

NOTE
Moderately tighten the nut on the plastic thread of the motor.

Proceed in the reverse order to removal.

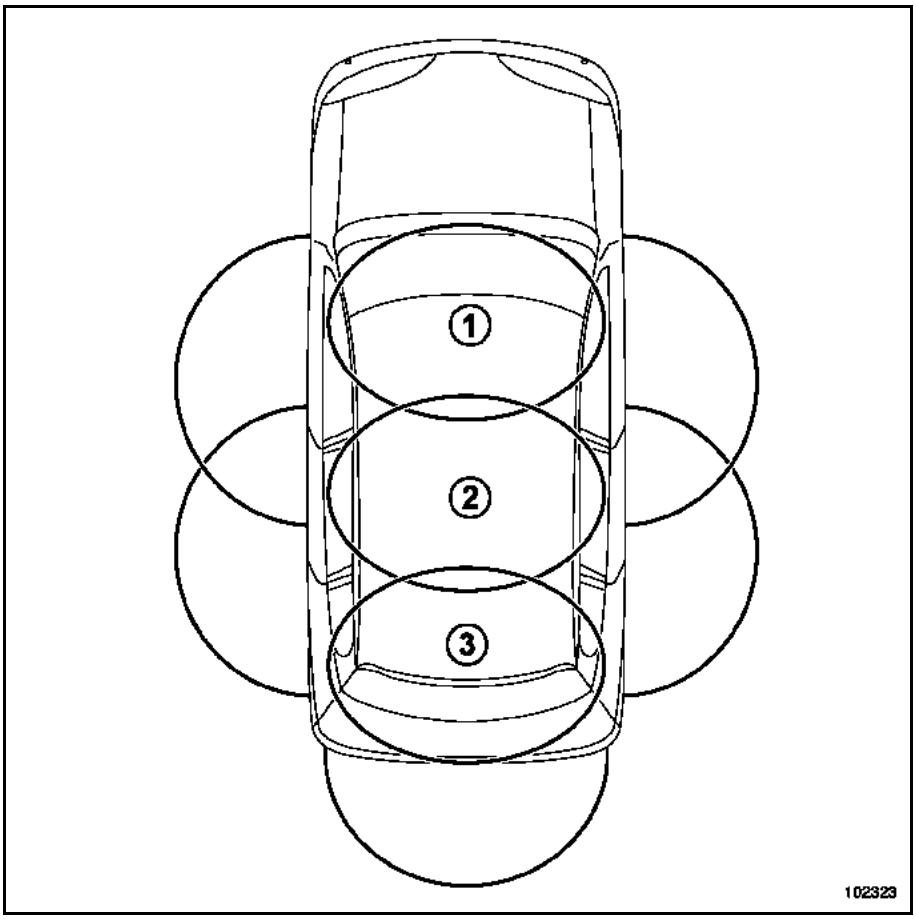

Vehicles with the hands-free system have three starting aerials for the card:
- one front detection aerial (**1**) located behind the front panel of the dashboard,
- an aerial (**2**) in the rear section of the centre console,
- an aerial (**3**) at the rear section of the floor.

Note:
- The opening aerials have no effect on the immobiliser system.
- The aerials are identical and interchangeable. They require no programming.

REMOVAL

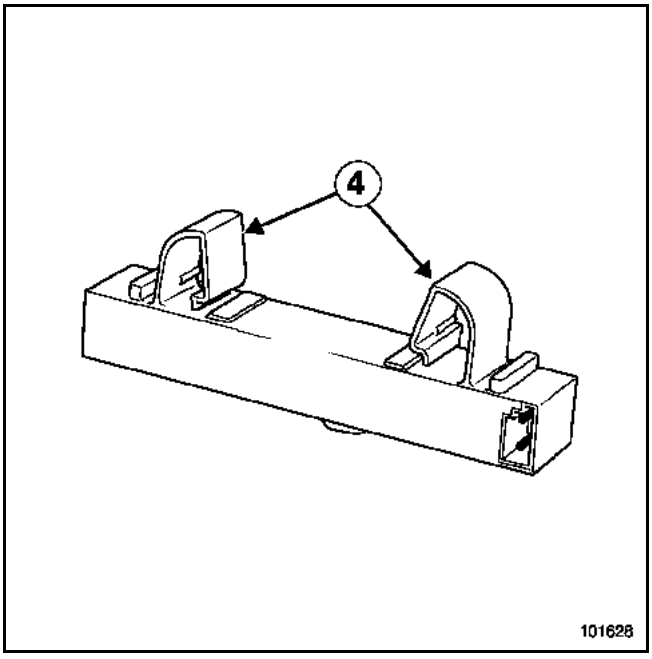

Unfasten clips (**4**) to detach the aerial.

NOTE
The starting aerial clips (**4**) are very fragile.

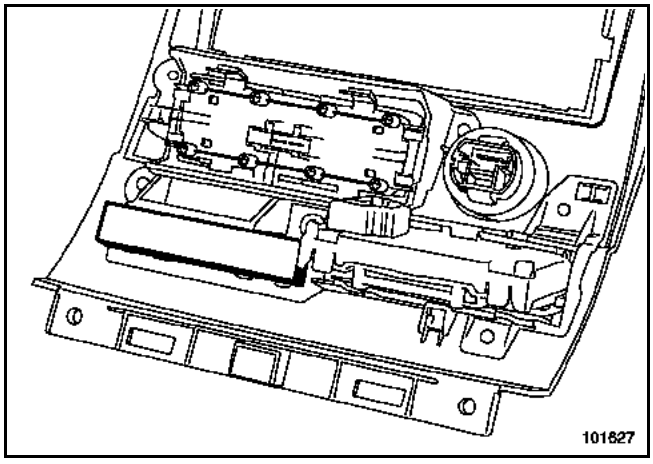

Unclip the face (see **Engine Immobiliser, Pressure Button** Section, page **82A-16**).

I - CENTRAL AERIAL

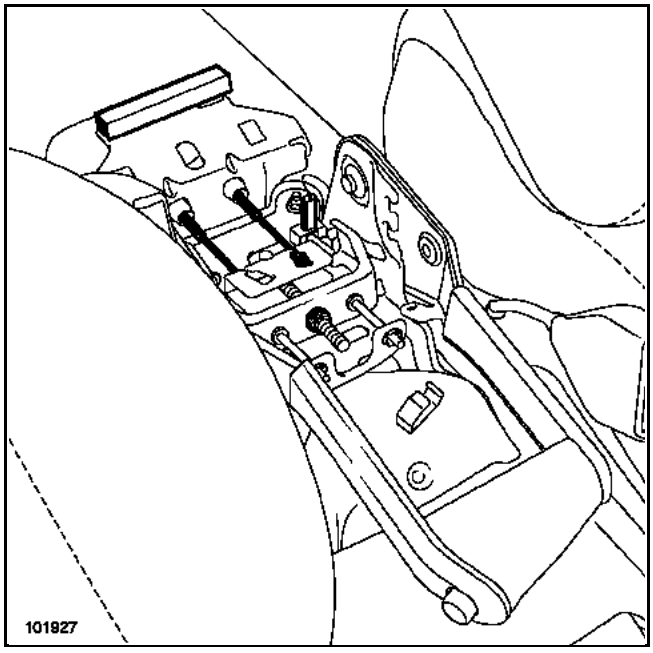

Remove the central console (see Section on **Central Console**).

II - REAR AERIAL

Slightly loosen the carpet in the luggage compartment.

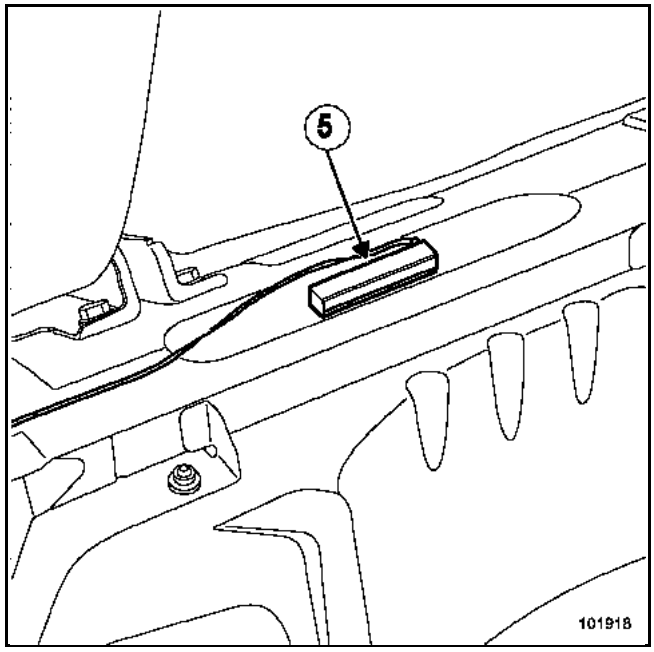

Unclip the aerial (**5**) by pressing the clips.

Vehicles equipped with the **hands-free** system have presence sensors and opener aerials to identify the card:
– an opener aerial (**1**) situated in each exterior handle,
– an opener aerial (**2**) situated in the rear bumper,
– a presence sensor in each handle.

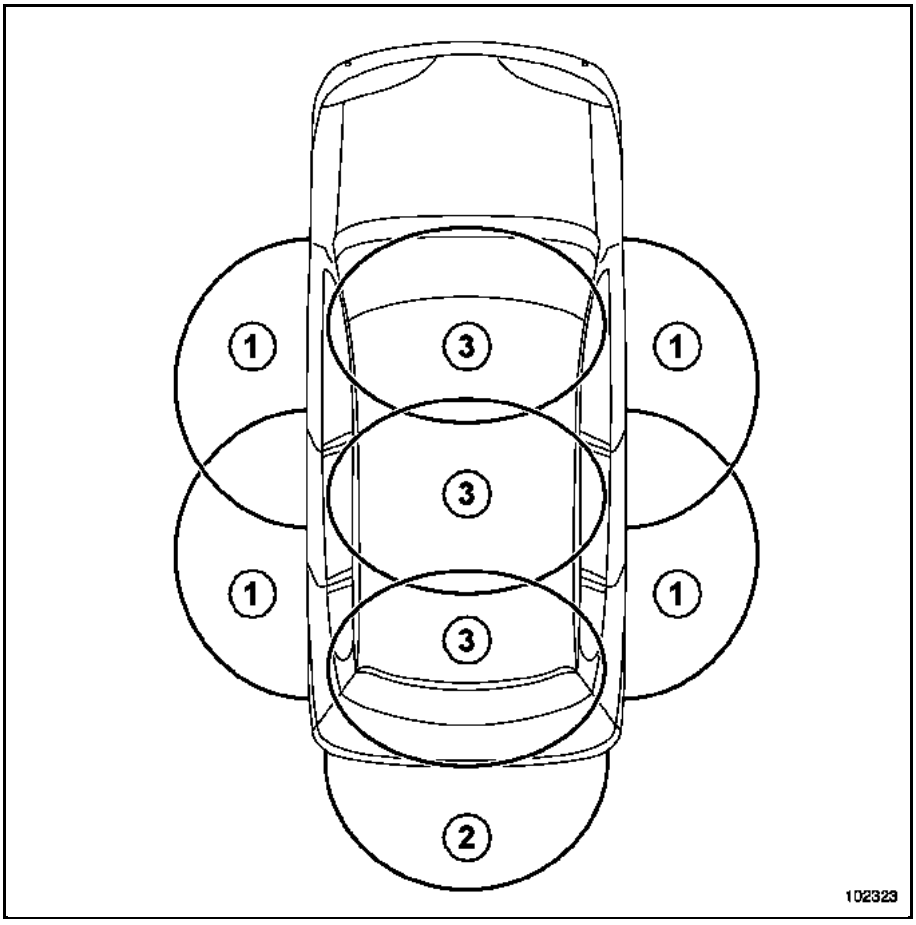

Note:
– The start aerials (**3**) have no effect on unlocking the vehicle. On the other hand, the vehicle cannot be locked with the **Close** buttons situated on the outside handles if the card is within the start zone.
– Motion sensors are built into the presence sensors.

REMOVAL

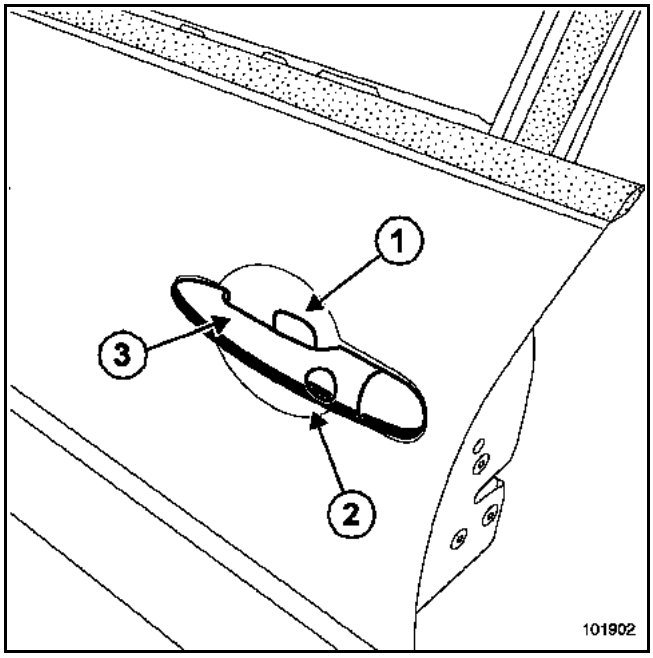

For operation in hands-free mode, the door handles must be fitted with:
– presence sensors (**1**) with a reflector on the handle to detect the user's hand,
– a locking button (**2**),
– an opening aerial incorporated in the handle (**3**).

Note:
Only vehicles with the hands-free function have a locking button (**2**).

Note:
After a period of non-use of approximately 72 hours, the presence sensors become deactivated. The unlock request is then detected by a motion sensor. The presence sensor and motion sensor are a single unit.

To remove the handles, see MR **365 Bodywork**.

In order to operate in hands-free mode, vehicles must be equipped with an opener aerial in the tailgate trim.

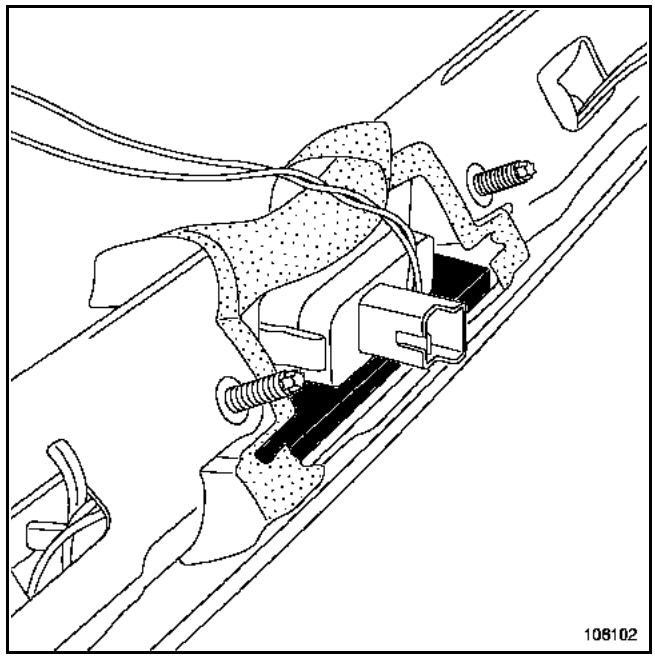

Remove the tailgate trim (see Technical Note **0586A** Section **55A-B**).

Disconnect aerial connector.

Remove the aerial.

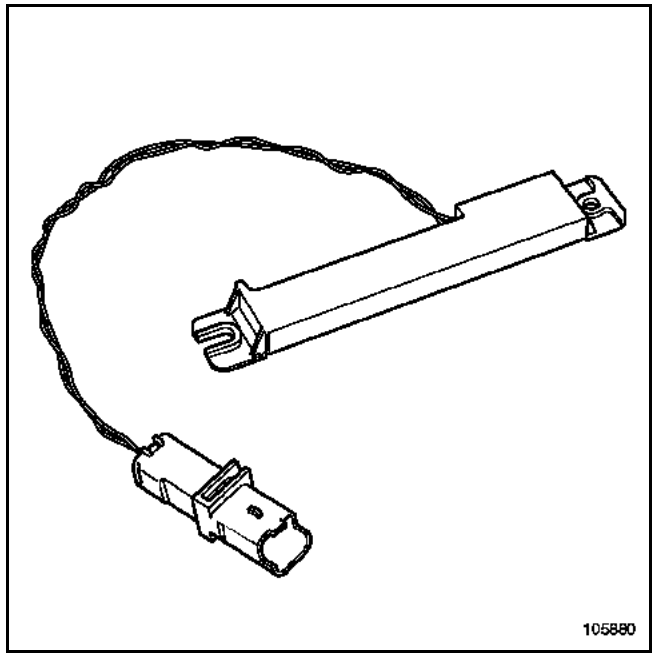

REFITTING

Proceed in the reverse order to removal.

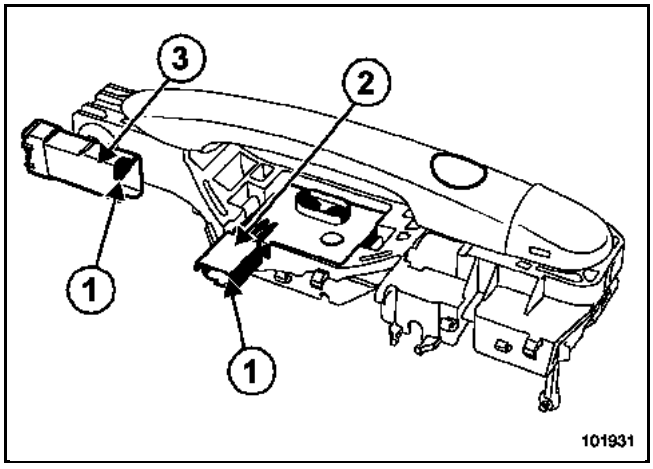

Presence and movement sensors (connector 2)

Track	Description
1	Sensor signal
2	Earth
3	Power supply + before ignition

Opener aerial and lock button (connector 3)

Track	Description
1	Opener aerial
2	Opener aerial
3	Locking signal
4	Locking earth connection

Note:
– The locking button is a simple switch. It can be tested with an ohmmeter between tracks 3 and 4.
– The opener aerial resistance is approximately **0.2 Ω**.

Equipment required
Diagnostic tool

Tightening torques	
inertia reel mounting bolt	**2.1 daNm**
fitting mounting bolt	**2.1 daNm**

The rear seat belts (side seats) are fitted with pyrotechnic inertia reels.

REMOVAL

IMPORTANT
Before doing any work on a safety system component, lock the airbag computer with the **diagnostic tool** (see the **Electrical equipment** Section). When this function is activated all the trigger lines are inhibited, and the airbag warning light on the instrument panel is lit continuously (when the ignition is on).

Remove:
– the rear quarter panel lining,
– the rear parcel shelf trim.

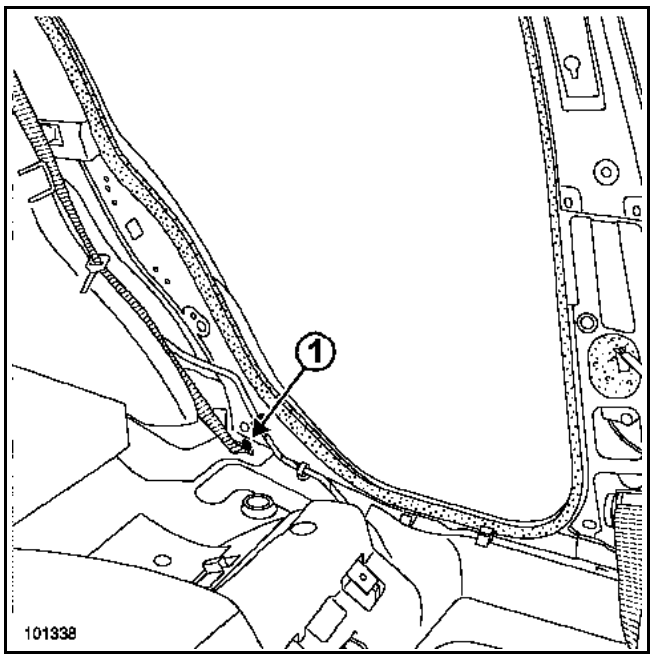

Remove seat belt lower mounting bolt (**1**).

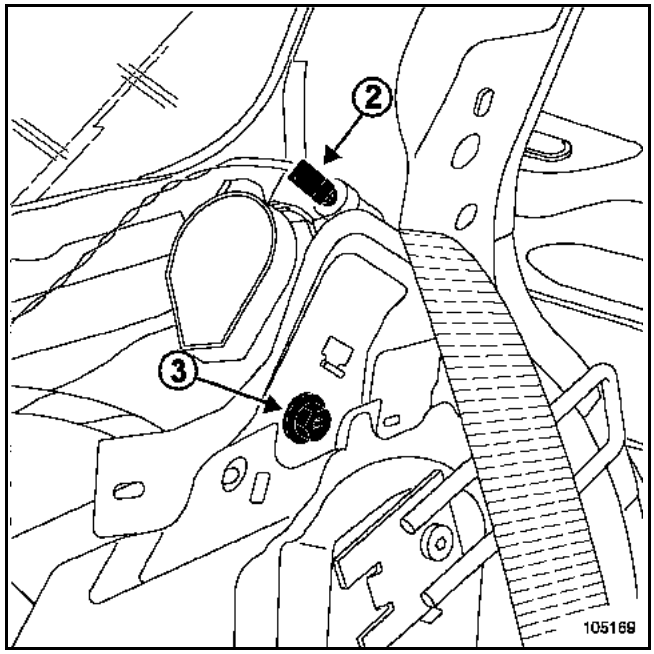

Disconnect the connector (**2**).

Remove:
– the inertia reel bolt (**3**),
– the seatbelt retractor.

IMPORTANT
To scrap a pretensioner that has not been triggered, see the **Airbag and pretensioners, Airbag and pretensioner computer** Section in MR **364**.

REFITTING

Proceed in the reverse order to removal.

NOTE
Once a pretensioner has been triggered, certain parts must be replaced (see the **Airbag and pretensioners, Airbag and pretensioner computer** Section in MR **364**).

Ensure that the wiring is correctly routed using the wiring mounting points.

Tighten to torque:
– the pretensioner mounting bolt (**2.1 daNm**),
– the seat belt fitting mounting bolt (**2.1 daNm**).

IMPORTANT
Check the airbag computer with the **diagnostic tool**.

If everything is correct, unlock the airbag computer, otherwise refer to the **fault finding manual**.

Equipment required
Diagnostic tool

Tightening torques	
Curtain airbag mounting bolt	**0.8 daNm**

The side curtain airbag is mounted behind the headlining.

The airbag detaches the headlining when it deploys.

REMOVAL

IMPORTANT
Before doing any work on a safety system component, lock the airbag computer with the **diagnostic tool** (see the **Electrical equipment** Section). When this function is activated all the trigger lines are inhibited and the airbag warning light on the instrument panel lights up (ignition on).

Remove the headlining (see MR **365**, Section **71A**).

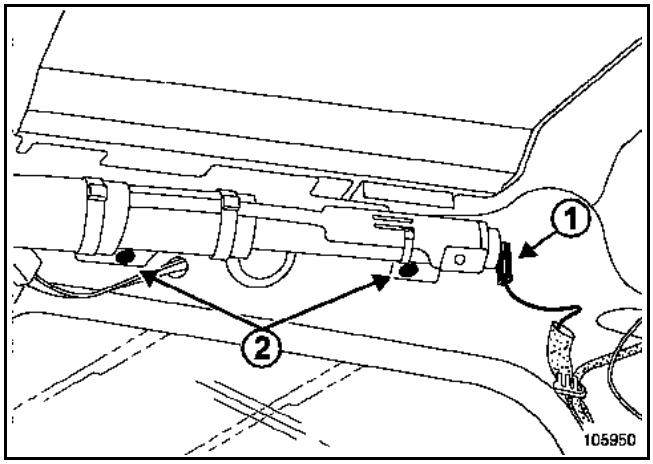

Disconnect the module connector (**1**).

Remove the module mounting bolts (**2**).

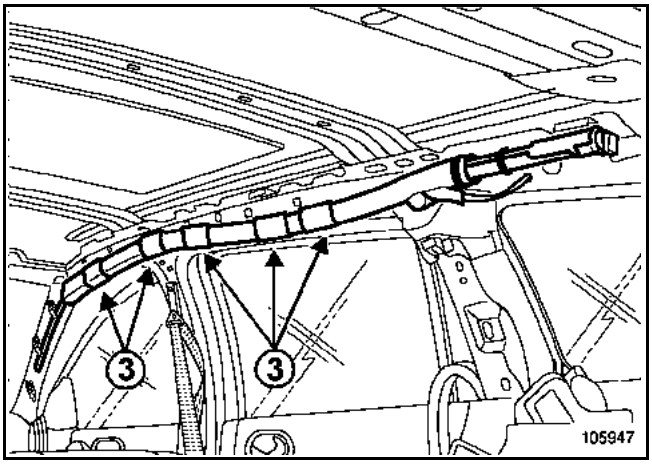

The curtain section (**3**) is clipped to the body.

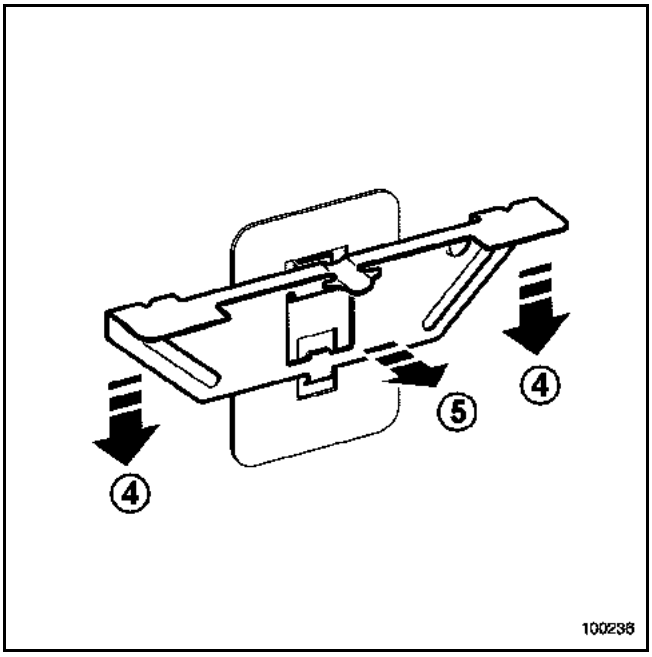

To unclip the curtain:
- pull down (**4**) the curtain to lower the clip mounted on the body,
- pull up (**5**) the curtain to remove the clip from the upper section.

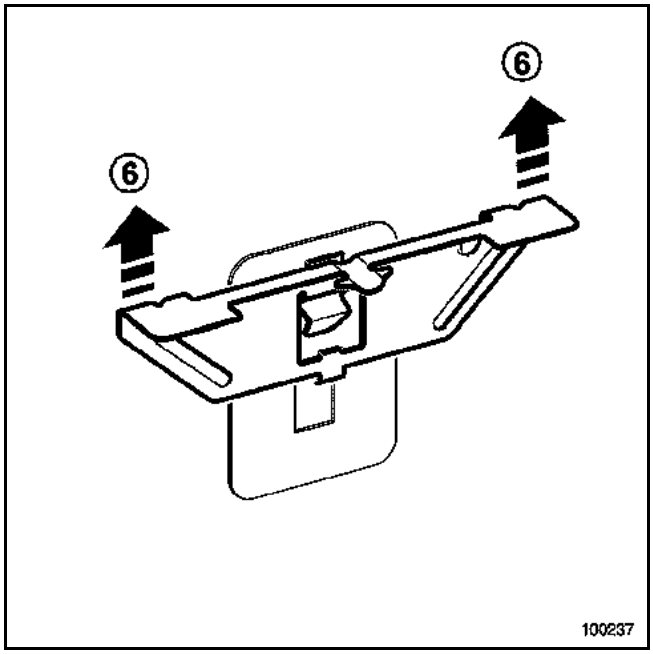

To unclip the curtain:
– raise (**6**) the assembly.

IMPORTANT
To scrap an airbag that has not been triggered, see the **Airbag and pretensioners, Airbag and pretensioner computer** Section in MR **88C-39**).

REFITTING

NOTE
– If a curtain airbag module is triggered, the damage to the first mounting is such that a plate, supplied as a replacement part, must always be fitted.
– Once a curtain airbag has been triggered, certain parts must be replaced (see the **Airbag and pretensioners, Airbag and pretensioner computer** Section in MR **364**).

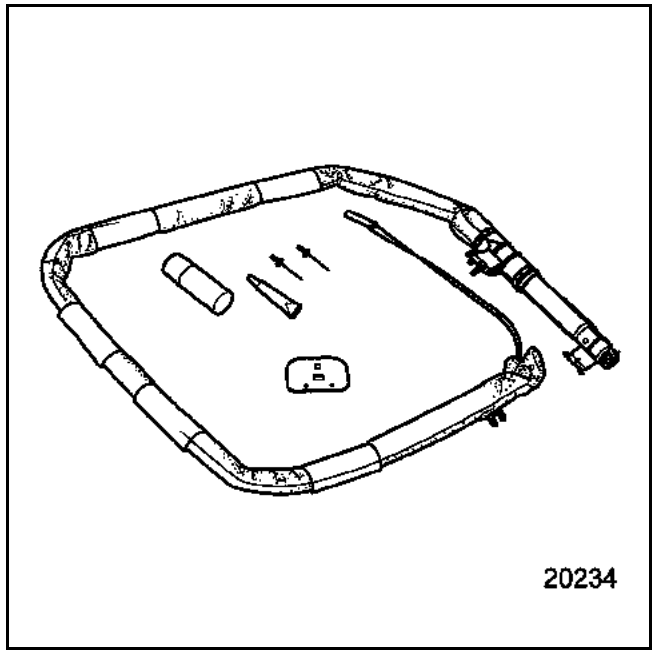

Use the following replacement parts:
– a curtain airbag,
– a plate (**part no.: 82 00 277 635**),
– two special rivets (**part no.: 77 03 072 050**),
– a tube of adhesive (**part no.: 77 11 171 805**).

Note:
The plates on the right and left-hand sides are identical.

I - FITTING THE PLATE

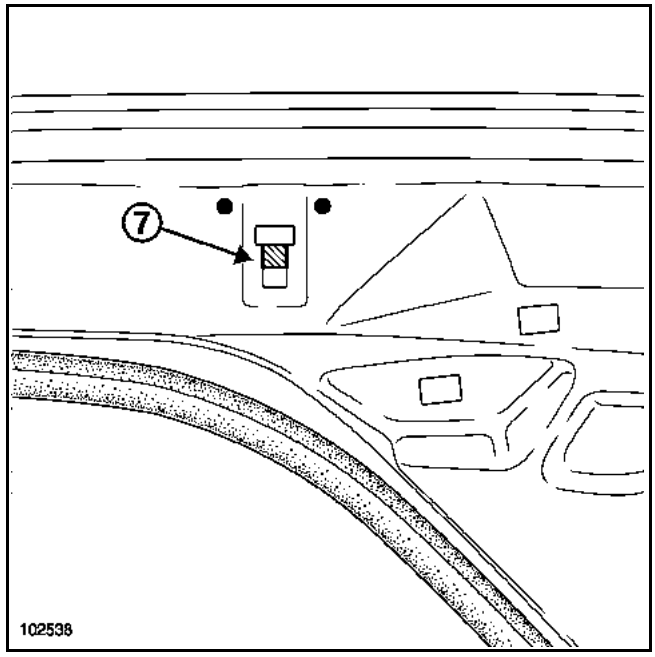

Cut away the plate (**7**) damaged by the triggering of the curtain airbag.

Apply an anti-corrosion paint treatment to the area of the cut.

Clean the bonding surfaces.

Degrease the bonding surfaces.

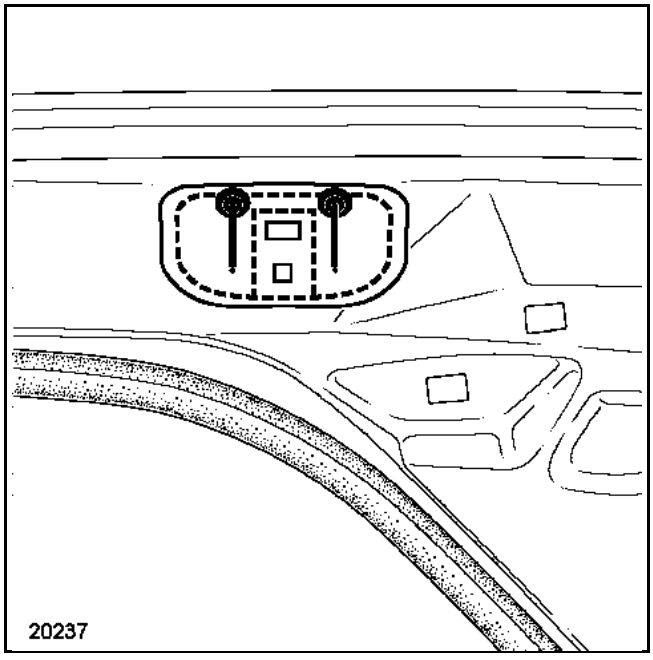

Apply the supplied activator and then coat the plate with adhesive.

Fit the plate.

Rivet the plate.

If everything is OK, unlock the airbag computer; if not, refer to the **fault finding manual**.

NOTE
The adhesive and rivets are specific and must under no circumstances be replaced by other components with different part numbers.

Inject wax into hollow body parts (see Bodywork Manual **365**).

II - FITTING THE MODULE

Position the airbag without tightening the mounting bolts.

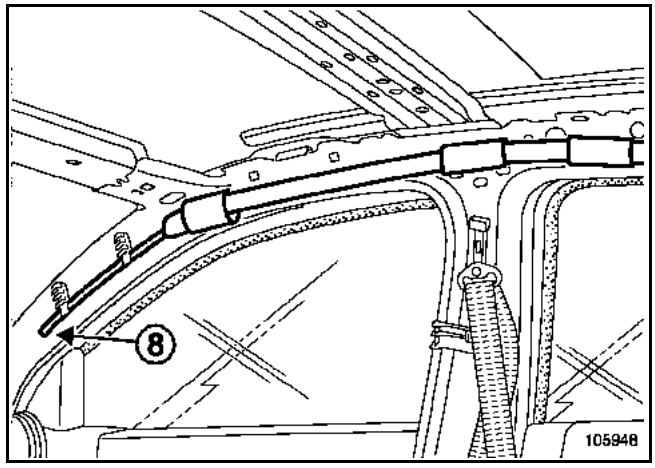

Fit the airbag, starting with the support (**8**).

Fit all of the clips.

Tighten to torque the **curtain airbag mounting bolts (0.8 daNm)**.

Reconnect the connector, ensuring that it locks into place properly.

IMPORTANT
Check the airbag computer with the **diagnostic tool**.

If everything is correct, unlock the airbag computer, otherwise refer to the **MR**.

All Types

Type	S/Section
XXX X	30A

30A MEASURING VEHICLE DRIFT WHILE DRIVING

- Engine: **XXX**
- Gearbox: **XXX**

This technical note describes the procedure for evaluating vehicle drift while driving.

"The repair methods given by the manufacturer in this document are based on the technical specifications current when it was prepared.

The methods may be modified as a result of changes introduced by the manufacturer in the production of the various component units and accessories from which his vehicles are constructed.

All copyrights reserved by Renault.

Copying or translating, in part or in full, of this document or use of the service part reference numbering system is forbidden without the prior written authority of Renault.

© RENAULT 2002

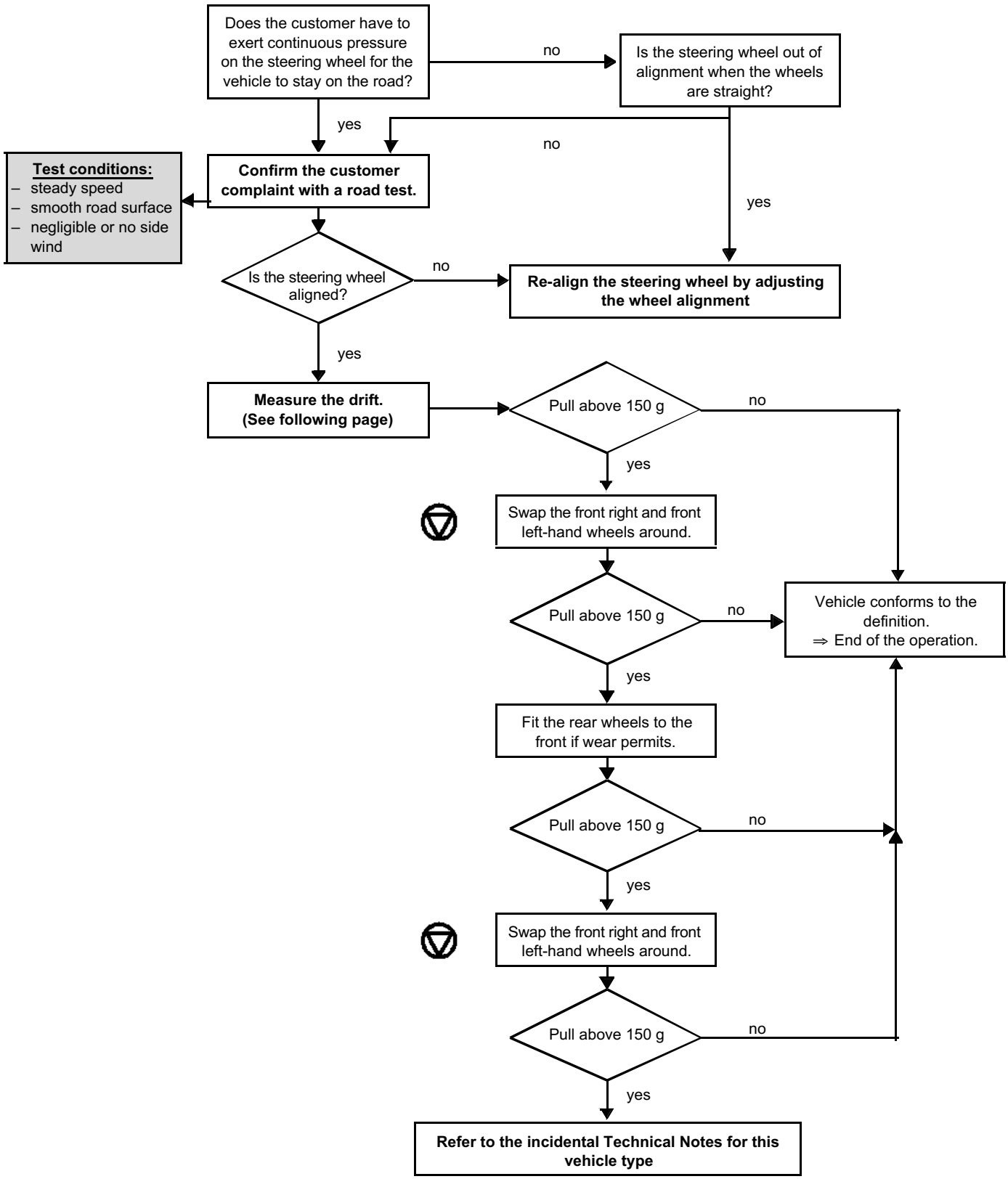

It is essential to return the wheels to their original positions after the test

PROCEDURE FOR MEASURING PULL

Equipment required:

– 1 plastic wallet
  Stationery part number: 49 39 125 580
– balancing weights

Description of the operation:

Wrap the plastic wallet (**A**) around the steering wheel spoke on the opposite side to the direction of pull.

Insert into the pocket the weights (**B**) needed to prevent pull.

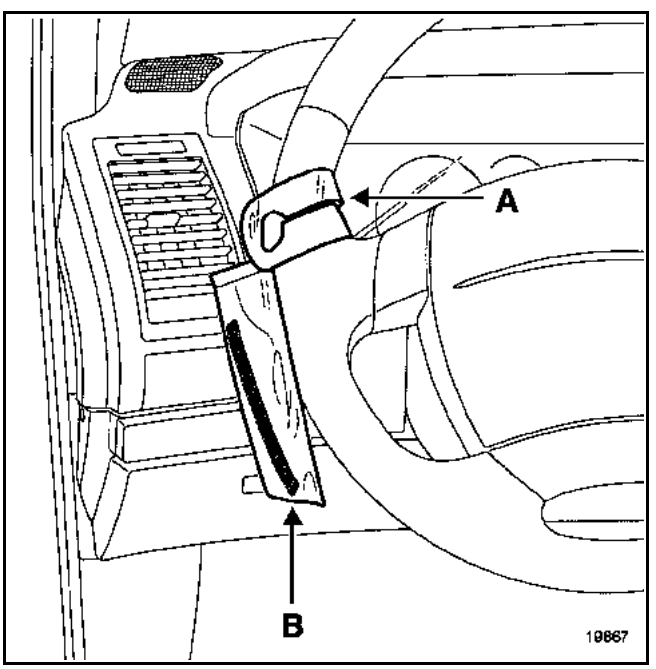

The pull value corresponds to the weight inside the plastic wallet.

RENAULT

Technical Note 3700A

XXXX

"FAULT FINDING LOGS"

Contents : Fault finding logs

This note applies to :

- the workshop,
- the stores,
- the warranty department.

77 11 319 502 Edition 10 - JULY 2005 EDITION ANGLAISE

"The repair procedures given by the Manufacturer in this document are based on the technical specifications current when it was prepared.

The procedures may be modified as a result of changes introduced by the manufacturer in the production of the various component units and accessories from which his vehicles are constructed."

All rights reserved by RENAULT s.a.s.

Copying or translating, in part or in full, of this document or use of the service part reference numbering system is prohibited without the prior written authority of RENAULT s.a.s.

© Renault s.a.s. 2005

WARNING!

WARNING
All problems involving a complex system call for thorough diagnostics with the appropriate tools. The FAULT FINDING LOG is an aid to the fault finding process, from the initial check to the part return. It enables you to keep a track of the fault finding procedure, and is an essential item for communication with the manufacturer.

IT IS THEREFORE MANDATORY TO FILL OUT A FAULT FINDING LOG FOR EACH FAULT FINDING PROCEDURE, FROM THE START OF THE OPERATION.

You will always be asked for this report:
– when requesting technical assistance from the Techline,
– when requesting approval before replacing parts for which approval is compulsory,
– to be enclosed when returning "monitored parts" on request. The sheet is needed for warranty compensation, and enables better analysis of the removed parts.

CONTENT OF THE TECHNICAL NOTE

The current Technical Note covers the fault finding logs specific to the various vehicle systems as well as the "all types", "computer not detected" and "computer not recognised" fault finding logs. The list of systems can be used to find the right log for the fault finding procedure.

Experience over two years of returned "computer removal logs" has shown:
– that if the logs are completed correctly, the analysis of the removed parts is considerably helped and enables the causes of the fault to be detected more quickly, enabling After Sales and mass production solutions to be implemented,
– that these logs were often far from fully completed, if at all, as they were not available during the fault finding procedure.

As a result:
– the fault finding log, which is a means of dialogue between the repairer and the manufacturer engineering departments, covers all complex systems, at least in terms of fault finding,
– it is essential that it is available to the repairer from the start of his fault finding procedure.

The fault finding logs will be incorporated in the Workshop Repair Manuals, from the MEGANE II, and in the "CLIP" tools.

USING THE "FAULT FINDING LOGS"

Initially, the logs from this note, the Workshop Repair Manual, or the CLIP tool are to be photocopied or printed and completed by the repairer by hand as he goes through the fault finding procedure.

At the start of your fault finding procedure, the CLIP tool will remind you of the need to complete these logs:

The fault finding logs will assist you in your operations as they go through the proper methodology and will enable you to keep a track of your fault finding procedure.

These fully completed logs are "attachments" to requests for technical assistance, prior approval requests and parts return requests:

⇒ **Technical assistance:**
During the fault finding procedure, if your problem persists, you can call the techline. The details that you have already entered on the log can be referred to when talking to the assistant and will help him discern what the problem could be.

⇒ **Approval requests:**
You have decided that it is essential to replace a component under "prior approval". The completed fault finding log attached to the approval request will allow the manufacturer to grant the requested approval more easily.

⇒ **Parts return:**
You have replaced a "monitored" part. Put the completed log with the faulty part in its packaging. When the part is returned to the manufacturer, this will enable RENAULT to complete the analysis of the part.

Subsequently, CLIP will incorporate logs that will be completed automatically by the fault finding tool, and which can then be transmitted, avoiding paperwork. The obligation to supply fault finding logs will be defined by the management in each subsidiary in the country (directives, technical instructions, warranty points, etc.)

LIST OF SYSTEMS

System	Part No.	Data acquisition by Clip: yes / no
Injection	FD 01	yes
Anti-lock braking system and Electronic Stability Program (ABS & ESP)	FD 02	yes
Air conditioning	FD 04	yes
Power assisted steering	FD 05	yes
Instrument panel	FD 10	
Automatic transmission and Sequential gearbox	FD 12	yes
Engine immobiliser	FD 13	yes
Connection unit	FD 15	yes
Air bags and pretensioners	FD 16	yes
Door management	FD 18	yes
Discharge bulbs	FD 19	yes
Tyre inflation pressure monitoring system (SSPP)	FD 23	yes
Parking aid	FD 24	yes
Electric parking brake	FD 27	yes
Wheel bearing	FD 89	no
Shock absorber	FD 90	no
Engine hydro-elastic rubber pad	FD 91	no
Fuel gauge	FD 92	no
Engine	FD 93	no
Manual gearbox	FD 94	no
Electronic Control Unit not recognised	FD 95	yes
Electronic Control Unit not detected	FD 96	yes
All types	FD 97	no
Navigation	FD 98	no
Radio	FD 99	no

FAULT FINDING LOG

System: Injection

List of monitored parts: ***Computer***

Administrative identification

Date	2 0
Sheet completed by	
VIN	
Engine	
Fault finding tool	CLIP
Update version	

Customer complaint

	579	Does not start - fault		570	Stalls - difficult to start when cold		571	Stalls - difficult to start when warm
	586	Ignition injection warning light/preheating		572	Idling - engine speed unsteady		574	Bucking - gaps
	573	Lack of power		520	Abnormal noise, vibrations		576	Smoke - exhaust odours
	569	Difficult to start						

Other — Please specify:

Conditions under which the customer observation occurs

	001	When cold		005	While driving		008	When decelerating
	002	When warm		006	When changing gear		009	Sudden fault
	003	When stationary		007	When accelerating		010	Gradual deterioration
	004	Intermittently						

Other — Please specify:

Documentation used in fault finding

Diagnostic method used	
Type of diagnostic manual:	Workshop Repair Manual ❑ Technical Note ❑ Assisted diagnostic ❑
Diagnostic Manual No.:	
Wiring diagram used	
Wiring Diagram Technical Note No.:	
Other documentation	
Title and/or part number:	

RENAULT

FD 01
Diagnostic Sheet

FAULT FINDING LOG

System: Injection

Computer identification and system parts exchanged

Part 1 part no.	
Part 2 part no.	
Part 3 part no.	
Part 4 part no.	
Part 5 part no.	

To be read with the fault finding tool (Identification screen):

Computer part no.	
Supplier no.	
Program no.	
Software version	
Calibration no.	
VDIAG	

Faults found with the fault finding tool

Fault no.	Present	Stored	Fault name	Specification

Conditions when fault occurs

Status or parameter no.	Parameter name	Value	Unit

System-specific information

Description:

Additional information

What components led you to replace the computer?	
What other parts were replaced?	
Other faulty functions?	
Please specify:	

RENAULT

FD 01
Diagnostic Sheet

FAULT FINDING LOG

System: ABS and ESP (Electric stability programme)

List of monitored parts: ***Computer***

Administrative identification

Date	2 0
Sheet completed by	
VIN	
Engine	
Diagnostic tool	CLIP
Revision	

Customer complaint

	1786	ABS not triggered		1787	Untimely triggering of ABS		1790	Warning lights come on
	1788	ESP not triggered		1789	Untimely triggering of ESP			

Other: Your comments

Conditions under which the customer's complaint occurs

	004	Intermittently		005	While driving		011	When the ignition is switched on
	009	Sudden breakdown						

Other: Your comments

Documentation used in fault finding

Diagnostic method used	
Type of fault finding manual:	Workshop Repair Manual ❑ Technical Note❑ Assisted fault finding ❑
Fault finding Manual No.:	
Wiring diagram used	
Wiring Diagram Technical Note No.:	
Other documentation	
Title and/or part no.:	

RENAULT

page to print or photocopy - page to print or photocopy - page to print or photocopy

FAULT FINDING LOG

System: ABS and ESP (Electric stability programme)

Identification of computer and system parts exchanged

Part 1 part no.	
Part 2 part no.	
Part 3 part no.	
Part 4 part no.	
Part 5 part no.	

To be read with the diagnostic tool (Identification screen):

Computer part no.	
Supplier no.	
Program no.	
Software version	
Calibration no.	
VDIAG	

Faults found with the diagnostic tool

Fault no.	Present	Stored	Fault title	Specification

Conditions when fault occurs

State or parameter no.	Name of parameter	Value	Unit

System-specific information

Description:

Additional information

What factors led you to replace the computer?	
What other parts were replaced?	
Other defective functions?	
Your comments	

RENAULT

FD 02
Fault finding log

FAULT FINDING LOG

System: Air conditioning

List of monitored parts: ***Computer***

Administrative identification

Date:	2 0
Log completed by:	
VIN:	
Engine	
Diagnostic tool	CLIP
Revision	

Customer complaint

	1127	No warm air		1129	Faulty air distribution		1130	Incorrect temperature setting
	1128	No cool air		1125	Heating/air conditioning: ventilation		1182	Heating/air conditioning: demisting

Other — Your comments

Conditions under which the customer's complaint occurs

	011	When the ignition is switched on		005	While driving		004	Intermittently
	010	Gradual deterioration		012	When the air conditioning is switched on		009	Sudden breakdown

Other — Your comments:

Documentation used in fault finding

Fault finding method used	
Type of fault finding manual:	Workshop Repair Manual ❑ Technical Note ❑ Assisted fault finding ❑
Fault finding Manual No.:	
Wiring diagram used	
Wiring Diagram Technical Note No.:	
Other documentation	
Title and/or part no.:	

RENAULT

page to print or photocopy - page to print or photocopy - page to print or photocopy

FAULT FINDING LOG

System: Air conditioning

Identification of the computer and system parts replaced

Part 1 part no.	
Part 2 part no.	
Part 3 part no.	
Part 4 part no.	
Part 5 part no.	

To be read with the diagnostic tool (Identification screen):

Computer part no.	
Supplier no.	
Program no.	
Software version	
Calibration no.	
VDIAG	

Faults found with the diagnostic tool

Fault no.	Present	Stored	Fault title	Specification

Conditions when fault occurs

State or parameter no.	Name of parameter	Value	Unit
	External temperature		
	Interior temperature		
	Refrigerant pressure		

System-specific information

Description:

Additional information

What factors led you to replace the computer?	
What other parts were replaced?	
Other defective functions?	
Your comments	

RENAULT

FD 04
Fault finding log

FAULT FINDING LOG

System: Power Assisted Steering

List of monitored parts: ***Computer***

Administrative identification

Date:	2 0
Sheet completed by:	
VIN:	
Engine	
Diagnostic tool	CLIP
Version	

Customer complaint

	1728	Assistance non-existent		1730	No assistance variation		1731	Too much assistance at high speed
	1729	Operation of power assisted steering warning light		1732	The recall is not active			

Other: Your comments

Conditions under which the customer complaint occurs

	005	While driving		010	Gradual deterioration		004	Intermittently
	009	Sudden breakdown						

Other: Your comments

Documentation used in fault finding

Fault finding procedure	
Type of fault finding manual:	Workshop Repair Manual: ❑ Technical Note ❑ Assisted fault finding ❑
Fault Finding Manual No.:	
Wiring diagram used	
Wiring Diagram Technical Note No.:	
Other documentation	
Title and/or part no.:	

RENAULT

page to print or photocopy - page to print or photocopy - page to print or photocopy

FAULT FINDING LOG

System: Power Assisted Steering

Identification of computer and system parts exchanged

Part 1 part no.	
Part 2 part no.	
Part 3 part no.	
Part 4 part no.	
Part 5 part no.	

To be read with the diagnostic tool (Identification screen):

Computer part no.	
Supplier no.	
Program no.	
Software version	
Calibration no.:	
VDIAG	

Faults found with the diagnostic tool

Fault no.	Present	Stored	Fault title	Specification

Conditions when fault occurs

State or parameter no.	Name of parameter	Value	Unit

System-specific information

Description:

Additional information

What factors led you to replace the computer? What other parts were replaced?	
Other faulty functions?	
Your comments	

RENAULT

FD 05
Fault finding log

FAULT FINDING LOG

System: Instrument panel

List of monitored parts: ***Computer***

Administrative identification

Date:	2 0
Sheet completed by:	
VIN:	
Engine	
Diagnostic tool	CLIP
Version	

Customer complaint

	1188	Faulty fuel level display		1156	Faulty coolant temperature display		1187	Digital display: faulty text / image
	1185	Faulty speedometer		1157	Warning lights fail to come on			
	1186	Faulty tachometer		1190	Faulty on-board computer output			

Other Your comments

Conditions under which the customer's problem occurs

	011	When the ignition is switched on		005	While driving		004	Intermittently
	009	Sudden breakdown		010	Gradual deterioration			

Other Your comments

Documentation used for fault finding

Fault finding procedure used	
Type of fault finding manual:	Workshop Repair Manual ❑ Technical Note ❑ Assisted fault finding ❑
Fault finding Manual No.:	
Wiring diagram used	
Wiring Diagram Technical Note No.:	
Other documentation	
Title and/or part no.:	

RENAULT

page to print or photocopy - page to print or photocopy - page to print or photocopy

FAULT FINDING LOG

System: Instrument panel

Identification of computer and system parts exchanged

Part 1 part no.	
Part 2 part no.	
Part 3 part no.	
Part 4 part no.	
Part 5 part no.	

To be read with the diagnostic tool (Identification screen):

Computer part no.	
Supplier no.	
Program no.	
Software version	
Calibration no.:	
VDIAG	

Faults found with the diagnostic tool

Fault no.	Present	Stored	Fault title	Specification

Conditions when fault occurs

State or parameter no.	Name of parameter	Value	Unit

System-specific information

Description:

Additional information

What factors led you to replace the computer?	
What other parts were replaced?	
Other defective functions?	
Your comments	

RENAULT

page to print or photocopy - page to print or photocopy - page to print or photocopy

FAULT FINDING LOG

System: Automatic or sequential transmission

List of monitored parts: ***Computer***

Administrative identification

Date:	2 0
Sheet completed by:	
VIN:	
Engine	
Diagnostic tool	CLIP
Version	

Customer complaint

	681	Gears not changing		622	Noise		679	No drive
	680	Skidding		675	Indicator light coming on		682	Lack of power
	683	Jolts or jerks		684	"3H"		685	Erratic gear change

Other: Your comments

Conditions under which the customer complaint occurs

	005	While driving		004	Intermittently		008	When decelerating
	007	When accelerating		009	Sudden breakdown		010	Gradual deterioration

Other: Your comments

Documentation used in fault finding

Fault finding procedure	
Type of fault finding manual:	Workshop Repair Manual: ❑ Technical Note ❑ Assisted fault finding ❑
Fault Finding Manual No.:	
Wiring diagram used	
Wiring Diagram Technical Note No.:	
Other documentation	
Title and/or part no.:	

RENAULT

FD 12
Fault finding log

FAULT FINDING LOG

System: Automatic or sequential transmission

Identification of the computer and system parts replaced

Part 1 part no.	
Part 2 part no.	
Part 3 part no.	
Part 4 part no.	
Part 5 part no.	

To be read with the diagnostic tool (Identification screen):

Computer part no.	
Supplier no.	
Program no.	
Software version	
Calibration no.:	
VDIAG	

Faults found with the diagnostic tool

Fault no.	Present	Stored	Fault title	Specification

Conditions when fault occurs

State or parameter no.	Name of parameter	Value	Unit

System-specific information

Description:

Additional information

N° of gearbox	
If the transmission is automatic, which mode is it (automatic/semi-automatic)?	
Any changes to gears as a result?	
Result of the gearbox oil level check	
Result of the oil check using "Add-On"	
Appearance of the oil	
Oil leakage?	No ❑ Seepage ❑ Droplets ❑
Location of the leak	
Type of noise (metallic, friction, etc.)	
Does the buzzer work?	Yes ❑ No ❑
What factors led you to replace the computer? What other parts were replaced?	
Other defective functions?	
Your comments	

RENAULT

FD 12
Fault finding log

FAULT FINDING LOG

System: Engine immobliser

List of monitored parts: ***Computer, card reader, handle modules, aerials, transponder ring***

Administrative identification

Date	2 0
Log completed by	
VIN	
Engine	
Diagnostic tool	CLIP
Update version	

Customer complaint

	1469	Ignition fault		1468	Does not start		1467	No warning light
	1466	Continuously lit		1465	Slow flashing		1464	Rapid flashing of warning light

Other — Please specify:

Conditions under which the customer complaint occurs

	009	Sudden fault		010	Gradual deterioration		004	Intermittently

Other — Please specify:

Documentation used in fault finding

Fault finding procedure used	
Type of fault finding manual:	Workshop Repair Manual ❑ Technical Note ❑ Assisted fault finding ❑
Diagnostic manual no.:	
Wiring diagram used	
Wiring Diagram Technical Note no.:	
Other documentation	
Title and/or part number:	

RENAULT

page to print or photocopy - page to print or photocopy - page to print or photocopy

FAULT FINDING LOG

System: Engine immobliser

Computer identification and system parts exchanged

Part 1 part no.	
Part 2 part no.	
Part 3 part no.	
Part 4 part no.	
Part 5 part no.	

To be read with the Diagnostic tool (Identification screen):

Computer part no.	
Supplier no.	
Program no.	
Software version	
Calibration no.	
VDIAG	

Faults found with the diagnostic tool

Fault no.	Present	Stored	Fault name	Characterisation

Conditions under which fault occurs

Status or parameter no.	Parameter name	Value	Unit

System-specific information

Description:

Additional information

What factors led you to replace the computer?	
What other parts were replaced?	
Are there any other defective functions?	
Please specify:	

For Laguna II, Vel Satis and Espace IV vehicles:

Is there a fault with both cards?	Yes ❑	No ❑
The instrument panel warning lights come on after the card is fully inserted in the reader:	Yes ❑	No ❑
The steering column is unlocked after the card is fully inserted in the reader:	Yes ❑	No ❑
After the card is fully inserted in the reader, the reader lighting:	Flashes rapidly ❑ s continuously lit ❑	Remains unlit ❑
Three seconds after the card is fully inserted in the reader, the immobiliser warning light on the instrument panel:	Flashes: slowly ❑ s continuously lit ❑	rapidly ❑ Remains unlit ❑
The vehicle starts after the Start button is pressed for more than 3 seconds	Yes ❑	No ❑

RENAULT

page to print or photocopy - page to print or photocopy - page to print or photocopy

FAULT FINDING LOG

System: Passenger Compartment Connection Unit

List of monitored parts: ***Computer***

Administrative identification

Date:	2 0
Sheet completed by	
VIN	
Engine	
Diagnostic tool	☐ CLIP ☐ OPTIMA 5800 ☐ NXR
Revision	

Customer complaint

☐	875	Door locking/unlocking problem	☐	1070	Lights problem	☐	1075	Wiper problem
☐	1194	Indicator lighting						

Other — Your comments:

Conditions under which the customer complaint occurs

☐	005	While driving	☐	010	Gradual deterioration	☐	004	Intermittently
☐	009	Sudden breakdown						

Other — Your comments:

Documentation used in fault finding

Fault finding procedure used	
Type of fault finding manual:	Workshop Repair Manual ❑ Technical Note ❑ Assisted fault finding ❑
Fault finding manual No.:	
Wiring diagram used	
Wiring Diagram Technical Note No.:	
Other documentation	
Title and/or part no.:	

RENAULT

page to print or photocopy - page to print or photocopy - page to print or photocopy

FAULT FINDING LOG

System: Passenger Compartment Connection Unit

Identification of computer and system parts exchanged

Part 1 no.	
Part 2 no.	
Part 3 no.	
Part 4 no.	
Part 5 no.	

To be read with the diagnostic tool (Identification screen):

Computer part no.	
Supplier no.	
Program no.	
Software version	
Calibration no.	
VDIAG	

Faults found with the diagnostic tool

Fault no.	Present	Stored	Fault title	Specification

Conditions when fault occurs

State or parameter no.	Name of parameter	Value	Unit

System-specific information

Description:

Additional information

What factors led you to replace the computer?	
What other parts were replaced?	
Other defective functions?	
Your comments	

RENAULT

page to print or photocopy - page to print or photocopy - page to print or photocopy

FAULT FINDING LOG

System: Airbags and pretensioners

List of monitored parts: ***Airbag computer***

Administrative identification

Date	2 0
Sheet completed by	
Business name or no./ Country	
Vehicle model	
VIN	
Engine	
Diagnostic tool	CLIP
Revision	

Customer complaint

	1192	Airbag warning light lit

Other — Your comments:

When the fault appears

	011	When the ignition is switched on
	004	Intermittently
	999	When starting the engine
	005	While driving

Other — Your comments:

Documentation used in fault finding

Fault finding procedure used	
Type of fault finding manual:	Workshop Repair Manual ❑ Technical Note ❑ Assisted fault finding ❑
Fault finding Manual No.:	
Wiring diagram used	
Wiring Diagram Technical Note No.:	
Other documentation	
Title and/or part no.:	

RENAULT

page to print or photocopy - page to print or photocopy - page to print or photocopy

FAULT FINDING LOG

System: Airbag and pretensioners

Identification of the computer and parts replaced for the system

Part 1 no.	
Part 2 no.	
Part 3 no.	
Part 4 no.	
Part 5 no.	

To be read with the diagnostic tool (identification screen):

Computer part no.	
Supplier no.	
Program no.	
Software version	
Calibration number	
VDIAG	

Faults found with the diagnostic tool

Fault no.	Present	Stored	Fault title	Specification

System-specific information

Total vehicle mileage (kilometrage) when the customer's problem occurred:	
How often does it occur?	
How long after the engine starts?	

Additional information

What factors led you to replace the computer?	
What other parts were replaced?	
Other defective functions?	❑ CAN ❑ Instrument panel ❑ Rotary switch ❑ Wiring harness ❑ Battery ❑ Fuse ❑ Seats ❑ Others
Your comments:	

RENAULT

page to print or photocopy - page to print or photocopy - page to print or photocopy

FAULT FINDING LOG

System: Door management

List of monitored parts: ***computer, cards, card reader, handle modules, antennas.***

Administrative identification

Date:	2 0
Sheet completed by:	
VIN:	
Engine	
Diagnostic tool	CLIP
Version	

Customer complaint

	875	Door locking/unlocking problem		1473	Card or remote control problem		881	Indicator light coming on
	1072	Interior lighting problems						

Other	Your comments

Conditions under which the customer complaint occurs

	005	While driving		010	Gradual deterioration		004	Intermittently
	009	Sudden breakdown						

Other	Your comments

Documentation used in fault finding

Fault finding procedure	
Type of fault finding manual:	Workshop Repair Manual: ❑ Technical Note ❑ Assisted fault finding ❑
Fault Finding Manual No.:	
Wiring diagram used	
Wiring Diagram Technical Note No.:	
Other documentation	
Title and/or part no.:	

Identification of computer and system parts exchanged

Part 1 part no.	
Part 2 part no.	
Part 3 part no.	
Part 4 part no.	
Part 5 part no.	

To be read with the diagnostic tool (Identification screen):

Computer part no.	
Supplier no.	
Program no.	
Software version	
Calibration no.:	
VDIAG	

RENAULT

page to print or photocopy - page to print or photocopy - page to print or photocopy

FAULT FINDING LOG

System: Door management

Faults found with the diagnostic tool

Fault no.	Present	Stored	Fault title	Specification

Conditions when fault occurs

State or parameter no.	Name of parameter	Value	Unit

System-specific information

Description:

Additional information

What factors led you to replace the computer?	
What other parts were replaced?	
Other defective functions?	
Your comments	

For Laguna II, Vel Satis and Espace IV vehicles:

❑ If locking and unlocking by touch of a button (2- or 3-button card):

Problem with both cards	Yes ❑	No ❑
Card diode lit on 1st press of the button?	Yes ❑	No ❑
Does the card lock the vehicle at a distance of 3 metres?	Yes ❑	No ❑
Does the card lock the vehicle at a distance of 1 metre?	Yes ❑	No ❑
Do you have to press the button harder to unlock?	Yes ❑	No ❑
Is this a recurring problem?	Yes ❑	No ❑
Can you start the vehicle with the card?	Yes ❑	No ❑
Do you have to press the button several times to lock and unlock?	Yes ❑	No ❑

❑ If vehicle is equipped with the hands-free option:

The fault occurs when :	Unlocking ❑	Locking ❑	Both ❑
The side-mounted indicators come on for 10 seconds after pressing on "Lock + Auto" at a distance of 1 or 3 metres:	At 1 metre:	Yes ❑	No ❑
	At 3 metres:	Yes ❑	No ❑
Does the client experience any problems in remote control mode (when pressing button)?		Yes ❑	No ❑
Does the problem always occur at the same place?		Yes ❑	No ❑
Can the vehicle be started with the card?		Yes ❑	No ❑

RENAULT

page to print or photocopy - page to print or photocopy - page to print or photocopy

FAULT FINDING LOG

System: Xenon lights

List of monitored parts: ***Computer***

Administrative identification

Date:	2 0
Sheet completed by:	
VIN:	
Engine	
Diagnostic tool	CLIP
Version	

Customer complaint

	1079	No automatic adjustment of the dipped headlights		1081	Untimely automatic adjustment		1082	The dipped headlights do not switch on
	1080	The dipped headlights do not switch off		1083	The dipped headlights come on intermittently		1084	The headlight range is too weak

Other: Your comments

Conditions under which the customer complaint occurs

	005	While driving		011	When switched on		009	Sudden breakdown
	003	When stationary		004	Intermittently		999	When switching on the main beam headlights

Other: Your comments

Documentation used in fault finding

Fault finding procedure	
Type of fault finding manual:	Workshop Repair Manual: ❑ Technical Note ❑ Assisted fault finding ❑
Fault Finding Manual No.:	
Wiring diagram used	
Wiring Diagram Technical Note No.:	
Other documentation	
Title and/or part no.:	

RENAULT

page to print or photocopy - page to print or photocopy - page to print or photocopy

FAULT FINDING LOG

System: Xenon lights

Identification of the computer and system parts replaced

Part 1 part no.	
Part 2 part no.	
Part 3 part no.	
Part 4 part no.	
Part 5 part no.	

To be read with the diagnostic tool (Identification screen):

Computer part no.	
Supplier no.	
Program no.	
Software version	
Calibration no.:	
VDIAG	

Faults found with the diagnostic tool

Fault no.	Present	Stored	Fault title	Specification

Conditions when fault occurs

State or parameter no.	Name of parameter	Value	Unit

System-specific information

Description:

Additional information

What factors led you to replace the computer? What other parts were replaced?	
Other faulty functions?	
Your comments	

RENAULT

FD 19
Fault finding log

FAULT FINDING LOG

System: Tyre Pressure Monitor

List of monitored parts: Computer, valves, receivers

Administrative identification

Date	2 0
Log completed by	
VIN	
Engine	
Diagnostic tool	CLIP
Update version	

Customer complaint

	1794	Tyre pressure monitor orange warning light flashes: text or icon
	1797	Tyre pressure monitor orange warning light comes on continuously: text or icon
	1795	Red puncture warning light lit: text or icon
	1798	No pressure display (only on Laguna and Vel Satis)
	1796	Faulty display
	1793	Wheels disappear from the display
	1792	Wheels flashing on the display

Other

Your notes: **indicate the wheel affected by the customer complaint and write down the message displayed on the instrument panel:**

Conditions under which the customer complaint occurs

	001	When cold
	002	When warm
	003	When stationary
	004	Intermittently
	005	While driving
	009	Sudden breakdown
	011	When the ignition is switched on

Other

Please specify:

Documentation used in fault finding

Fault finding procedure	
Type of fault finding manual:	Workshop Repair Manual: ❑ Technical Note ❑ Assisted fault finding ❑ Fault finding chart tracking n° . . .
Fault Finding Manual No.:	
Wiring diagram used	
Wiring Diagram Technical Note No.:	
Other documentation	
Title and/or part number:	

RENAULT

page to print or photocopy - page to print or photocopy - page to print or photocopy

FAULT FINDING LOG

System: Tyre Pressure Monitor

Identification of computer and system parts exchanged

Part 1 part number	
Part 2 part number	
Part 3 part number	
Part 4 part number	
Part 5 part number	

To be read with the diagnostic tool (Identification screen):

Computer part no.	
Supplier no.	
Program no.	
Software version	
Calibration no.:	
VDIAG	

Faults read with diagnostic tool before operation

Fault no.	Present	Stored	Fault title	Specification

Conditions when fault occurs

Status or parameter no.	Name of parameter	Value	Unit

System-specific information

Description:

Additional information

What other parts were replaced?	
What factors led you to replace the part(s)?	
For Laguna II, Vel Satis and Espace IV vehicles, has trigger threshold command VP 017 been correctly performed?	
What was the vehicle's mileage when the customer's complaint occurred?	
What is the size of the wheel rims and the size of the tyres?	
FIC No. (Customer Incident Log)	

RENAULT

page to print or photocopy - page to print or photocopy - page to print or photocopy

FAULT FINDING LOG

System: Parking aid

List of monitored parts: ***Computer***

Administrative identification

Date	2 0
Sheet completed by	
VIN	
Engine	
Fault finding tool	CLIP
Update version	

Customer observation

	1198	No audible signal		1173	Constant audible signal		1172	The system does not detect obstacles

Other — Please specify:

Conditions under which the customer observation occurs

	011	When ignition switched on		005	When driving		004	Intermittently
	009	Sudden fault		999	When reverse gear is engaged			

Other — Please specify:

Documentation used in fault finding

Fault finding method used	
Type of fault finding manual:	Workshop Repair Manual ❑ Technical Note ❑ Assisted fault finding ❑
Fault finding manual no.:	
Wiring diagram used	
Wiring Diagram Technical Note No.:	
Other documentation	
Title and/or reference:	

RENAULT

page to print or photocopy - page to print or photocopy - page to print or photocopy

FAULT FINDING LOG

System: Parking aid

Computer identification and system parts replaced

Part 1 part no.	
Part 2 part no.	
Part 3 part no.	
Part 4 part no.	
Part 5 part no.	

To be read with the Fault finding tool (Identification screen):

Computer part no.	
Supplier no.	
Program no.	
Software version	
Calibration no.	
VDIAG	

Faults found with the fault finding tool

Fault no.	Present	Stored	Fault name	Characterisation

Conditions when fault occurs

Status or parameter no.	Parameter name	Value	Unit

System-specific information

Description:

Additional information

What factors led you to replace the computer?	
What other parts were replaced?	
Other faulty functions?	
Please specify:	

RENAULT

FD 24
Diagnostic Sheet

FAULT FINDING LOG

System: Electric Parking Brake

List of monitored parts: ***Computer.***

Administrative identification

Date	2 0
Log completed by	
VIN	
Engine	
Diagnostic tool	CLIP
Version	

Customer complaint

	1733	Natural application or release fault		1734	Automatic application fault		1735	Automatic release fault
	1736	Emergency braking fault		1737	Untimely application fault		1738	No lighting of indicator light on instrument panel

Other — Please specify:

Conditions under which the customer complaint occurs

	004	Intermittently		011	When ignition is switched on		009	Sudden breakdown
	003	When stationary		999	When driving at less than 10 kph		999	When driving at more than 10 kph

Other — Please specify:

Documentation used in fault finding

Fault finding procedure	
Type of fault finding manual:	Workshop Repair Manual: ❑ Technical Note ❑ Assisted fault finding ❑
Fault Finding Manual No.:	
Wiring diagram used	
Wiring Diagram Technical Note No.:	
Other documentation	
Title and/or part no.:	

Identification of computer and system parts exchanged

Part 1 part no.	
Part 2 part no.	
Part 3 part no.	
Part 4 part no.	
Part 5 part no.	

To be read with the diagnostic tool (Identification screen):

Computer part no.	
Supplier no.	
Program no.	
Software version	
Calibration no.:	
VDIAG	

RENAULT

page to print or photocopy - page to print or photocopy - page to print or photocopy

FAULT FINDING LOG

System: Door management

Faults found with the diagnostic tool

Fault no.	Present	Stored	Fault title	Specification

Conditions when fault occurs

State or parameter no.	Name of parameter	Value	Unit

System-specific information

Description:

Additional information

What factors led you to replace the computer?	
What other parts were replaced?	
Other faulty functions?	
Please specify:	

Vehicle configuration before change:

On MAIN screen:	ET 024 "System operation":	❑ Customer mode	❑ Factory mode
On AUTOMATIC APPLICATION screen:	ET 022 "Automatic application configuration":	❑ With	❑ Without
On AUTOMATIC RELEASE screen:	ET 023 "Automatic release configuration":	❑ With	❑ Without

Warning: Any change in configuration of the automatic application or release features, at the request of the customer, must be traced by this log. The repairer is, moreover, obliged to note this change in the maintenance handbook for the vehicle in question.

Vehicle configuration after change:

On MAIN screen:	ET 024 "System operation":	❑ Customer mode	❑ Factory mode
On AUTOMATIC APPLICATION screen:	ET 022 "Automatic application configuration":	❑ With	❑ Without
On AUTOMATIC RELEASE screen:	ET 023 "Automatic release configuration":	❑ With	❑ Without

RENAULT

page to print or photocopy - page to print or photocopy - page to print or photocopy

FAULT FINDING LOG

Wheel bearing

List of monitored parts: ***Wheel bearing***

- **Administrative identification**

Date	2 0
Sheet completed by	
VIN	

- **Customer complaint**

	Noise		On a straight line		When turning corners

Other — Please specify:

REPRODUCE THE CUSTOMER COMPLAINT IN A ROAD TEST

- **Conditions in which the noise appears**

	When moving (1)		When turning left (1)		When turning right (1)
			In a straight line (1)		Modulation of the noise with speed (1)
	No reproduction of the customer complaint (2)		Intermittently (2)		Modulation of the noise with speed (2)

Other — Please specify:

- **Documentation to use for fault finding**

(1) Run the fault finding following Technical Note 3633A

(2) Do not replace the wheel bearing.

IMPORTANT:
Tyre noise may be comparable to bearing noise.

- **Fault finding results**

	Noise location		Front Right		Front Left
			Rear Right		Rear Left
	No noise location				

RENAULT

FD 89
Diagnostic Sheet

FAULT FINDING LOG

Shock absorber

List of parts under surveillance: ***Shock absorber***

- **Administrative identification**

Date	2 0
Sheet completed by	
VIN	

- **Customer complaint**

	Intermittent noise		Permanent noise

Other — Please specify:

REPRODUCE THE CUSTOMER COMPLAINT BY A ROAD TEST

- **Issue conditions**

	When stopped (2)		When the passenger gets in or out (2)		During body movement (2)
	Whilst manoeuvring (2)		Going onto the pavement or from it (2)		During parking manoeuvres (2)
	When driving (1)		When going over a "sleeping policeman" (1)		When driving on a bad road (1)

Other — Please specify:

- **Documentation to use for fault finding**

(1) Carry out fault finding according to Technical Note 3867A

(2) Do not replace the shock absorber

- **Fault finding results**

	No noise localisation (2)				
	Noise localisation		Front Right		Front Left
			Rear right		Rear left

- **Fault finding results**

	Knocking	– Noise caused on direction inversion by the piston and shock absorber valves. – Noise similar to banging on a small drum.
	Banging / Knocking	– Noise caused by a bad component or poor suspension assembly. – Burst of small dry banging noises similar to metal impacts.
	Grating	Noise caused by contact between a metal part and a rubber part.

RENAULT

FD 90
Diagnostic Sheet

FAULT FINDING LOG

Engine hydro-elastic rubber pad

List of parts under surveillance: ***Hydro-elastic engine rubber pad***

- **Administrative identification**

Date	2 0
Sheet completed by	
VIN	

- **Documentation used in fault finding**

Diagnostic method used	
Type of diagnostic manual:	Workshop Repair Manual ❑ Technical Note ❑ Assisted diagnostic ❑
Diagnostic Manual No.:	

- **Customer complaint**

☐	Front right noise	☐	Comparable to shock absorber noise	☐	Noise in bursts
☐	Torque blows	☐	Vibrations		

Other — Please specify:

- **Conditions in which the customer complaint occurs**

☐	When cold	☐	Engine running and vehicle stationary	☐	When accelerating
☐	When warm	☐	When changing gears	☐	Speed between 15 / 30 mph)
☐	While driving	☐	When starting up/turning off the engine	☐	Noise starts at 38 mph
☐	When turning right	☐	On rough tracks	☐	Gradual deterioration
☐	When turning left	☐	When decelerating		

Other — Please specify:

- **Additional information**

What caused you to replace the Hydro-elastic engine rubber pad?	
Which other parts were replaced?	
Please specify:	

RENAULT

FD 91
Diagnostic Sheet

FAULT FINDING LOG
Fuel sender

List of parts to be checked : ***fuel sender***

- **Administrative identification**

Date							2	0											
Sheet completed by																			
VIN																			

- **Documentation to use for fault finding**

Apply the fault finding procedure according to Technical Note 3680A.

- **Customer complaint**

☐	The fuel level does not display that the tank is full	☐	The fuel level indicator is blocked in Full position	☐	The warning light does not come on
☐	The fuel level indicator is blocked at zero	☐	The fuel level indicator does not display the correct level	☐	The warning light comes on too soon
☐	The fuel level indicator is blocked at half position	☐	The fuel level indicator is unsteady	☐	The warning light is flashing

Other — Please specify:

- **Conditions under which the customer complaint occurs**

☐	While driving	☐	City driving	☐	When turning corners
☐	After filling up	☐	Driving on roads		
☐	After cutting and restarting ignition	☐	Driving on roads		

Other — Please specify:

- **Additional information**

What factors led you to replace the fuel gauge?	
What other parts were replaced?	
Please specify:	

RENAULT

FD 92
Diagnostic Sheet

FAULT FINDING LOG

System: Engine

Repair Order No.: Date:	Dealership account no:
Sheet completed by: Telephone:	Dealership stamp:
V.I.N.: After-Sales type:	
Engine type: Engine fabrication N&ring:	
Vehicle mileage: Delivery date:	Mileage at last service:
Date of last service:	

Fault finding procedure used (reference number from the Workshop Repair Manual or from the Technical Note, etc.):

Diagnostic tool: ❑ NXR ❑ Optima 5800 ❑ Clip

Latest version of diagnostic tool:

CUSTOMER COMPLAINT: _____

_____

The fault is: - Permanent ❑ YES ❑ NO - Reproducible ❑ YES ❑ NO - Intermittent ❑ YES ❑ NO

❑ **BEHAVIOUR FAULT** Date appeared:

	❑ Hesitation	❑ Lack of power	❑ Flatting	❑ Timing
Starting:	❑ difficult	❑ impossible		
Idle speed:	❑ sticking	❑ unstable		
Warning light:	❑ orange	❑ red	Which: _____	
	❑ odours	❑ backfiring		
Seized:	❑ YES	❑ Component: _____		
Consumption:	❑ YES	❑ Nature: _____		

Other: _____

_____

❑ **LEAK**

Nature:_____

Location:_____

❑ **NOISE**

Location:_____

Type of noise: ❑ metallic ❑ rubbing ❑ whining ❑ repetitive noise

❑ **WHEN THE FAULT APPEARS**

Conditions:	❑ stationary	❑ driving	❑ under acceleration	❑ under deceleration
	❑ starting	❑ moving off	❑ changing gears	
	❑ cold	❑ warm		
	❑ under load	❑ no load	❑ Engine speed: _____	
	❑ sudden breakdown	❑ deterioration	❑ intermittent	

RENAULT

FFL 93
Fault finding log

FAULT FINDING LOG

System: Engine

❑ **COMPUTER PARAMETERS (NXR: parameter screen, CLIP/Optima: Command screen)**

Computer part number: _____ Program no.: _____

Software version no.: _____ Calibration no.: _____

Vdiag no.: _____

❑ **FAULTS NOTED BEFORE OPERATION (NXR or CLIP/Optima: Faults screen)**

Fault no.	Present	Stored	Fault title	Specification
089	❑	✔	*Fuel pressure regulation*	
	❑	❑		
	❑	❑		
	❑	❑		
	❑	❑		
	❑	❑		
	❑	❑		
	❑	❑		
	❑	❑		
	❑	❑		

❑ **PARAMETERS ASSOCIATED WITH NOTED FAULTS**

(NXR: Faults screen + * (star) key or CLIP/Optima: Functions screen)

Fault no.	Parameter no.	Fault title	Value	Unit
		Fuel pressure		

YOUR FAULT FINDING and OPINION:

Your fault finding: _____

_____

_____

_____

Have you used a circuit diagram (which reference number)? _____

_____

_____

RENAULT

FFL 93
Fault finding log

FAULT FINDING LOG

System: manual gearbox

Repair order no.: Date:	Dealership account no.:
Sheet completed by: Telephone:	Dealership stamp:
VIN:	
Engine type: Gearbox type: Gearbox no.:	
Vehicle mileage: Delivery date:	Mileage at last service:
Date of last service:	

Diagnostic method used (Part number from the Workshop Repair Manual or from the Technical Note, etc.): _____

CUSTOMER COMPLAINT: _____

_____

The fault is: - Permanent ❑ YES ❑ NO - Reproducible ❑ YES ❑ NO - Intermittent ❑ YES ❑ NO

BEFORE ANY REMOVAL OPERATION ENSURE THAT THE EXTERNAL CONTROL IS CORRECTLY ADJUSTED AND THE CLUTCH IS WORKING CORRECTLY

❑ BEHAVIOUR FAULT

Date appeared:

On the grid opposite, circle the faulty gear(s)

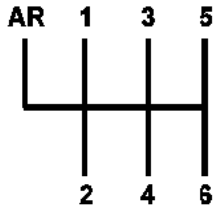

❑ No more drive:

❑ Gear change no longer possible

❑ Selection impossible ❑ Gear change blocked

❑ Irregular gear change:

❑ Difficult ❑ Creaks ❑ Crunches ❑ Jumps

❑ When warm ❑ When cold ❑ Changing up through gears ❑ Changing down through gears

❑ Upon acceleration ❑ Upon deceleration ❑ Engine running ❑ Engine stopped

❑ OIL CHECK AND APPEARANCE

❑ level correct ❑ level low ❑ too much oil

❑ normal appearance ❑ filings ❑ water present

❑ LEAK

Type: ❑ seepage ❑ droplets ❑ oil leaks

Location: ❑ housing ❑ right-hand driveshaft seal ❑ left-hand driveshaft gaiter ❑ crankcase vent

❑ input shaft seal ❑ 4X4 output shaft ❑ filler plug ❑ drain plug

Others: _____

WIPE AND USE A REVEALING PRODUCT TO NARROW DOWN YOUR FAULT FINDING PROCEDURE

❑ NOISE

Type of noise: ❑ metallic ❑ grating ❑ whining ❑ repetitive

Conditions: ❑ stationary ❑ driving ❑ accelerating ❑ decelerating

❑ COMPONENT FAILURE: YOUR DIAGNOSIS : _____

RENAULT

FD 94
Fault finding log

FAULT FINDING LOG

Computer not recognised by the diagnostic tool

List of monitored parts: ***Computer***

- **Administrative identification**

Date:	2 0
Log completed by:	
VIN:	
Engine	
Diagnostic tool	CLIP
Version	

- **Customer complaint**

Other	Your comments

- **Conditions under which the customer complaint occurs**

Other	Your comments

- **Documentation used in fault finding**

Fault finding procedure used	
Type of fault finding manual:	Workshop Repair Manual: ❑ Technical Note ❑ Assisted fault finding ❑
Fault finding Manual No.:	
Wiring diagram used	
Wiring Diagram Technical Note No.:	
Other documentation	
Title and/or part no.:	

RENAULT

page to print or photocopy - page to print or photocopy - page to print or photocopy - page to print or photocopy

FAULT FINDING LOG

Computer not recognised by the diagnostic tool

- **Identification of the computer and system parts replaced**

To be read with the diagnostic tool (Identification screen):

Computer part no.	
Supplier no.	
Program no.	
Software version	
Calibration no.:	
VDIAG	

- **System-specific information**

The diagnostic tool issues an error message when it is connected to the computer:

- **Additional information**

What factors led you to replace the computer?	
What other parts were replaced?	
Other defective functions?	
Your comments	

RENAULT

page to print or photocopy - page to print or photocopy - page to print or photocopy - page to print or photocopy

FAULT FINDING LOG

Computer not detected

List of monitored parts: ***Computer***

- **Administrative identification**

Date:	2 0
Sheet completed by:	
VIN:	
Engine	
Diagnostic tool	CLIP
Revision	

- **Customer complaint**

Other — Your comments

- **Conditions under which the customer's complaint occurs**

Other — Your comments

- **Documentation used in fault finding**

Fault finding method used	
Type of fault finding manual:	Workshop Repair Manual ❑ Technical Note ❑ Assisted fault finding ❑
Fault finding Manual No.:	
Wiring diagram used	
Wiring Diagram Technical Note No.:	
Other documentation	
Title and/or part no.:	

RENAULT

page to print or photocopy - page to print or photocopy - page to print or photocopy

FAULT FINDING LOG

Computer not detected

- **Identification of the computer and system parts replaced**

Part 1 part no.	
Part 2 part no.	
Part 3 part no.	
Part 4 part no.	
Part 5 part no.	

- **Additional information**

What factors led you to replace the computer?	
What other parts were replaced?	
Other defective functions?	
Your comments	

RENAULT

page to print or photocopy - page to print or photocopy - page to print or photocopy

FAULT FINDING LOG

System: All types

List of monitored parts: ***Computer***

Administrative identification

Date	2 0
Log completed by	
VIN	
Engine	
Diagnostic tool	CLIP
Version	

Customer complaint

Please specify:

Conditions under which the customer complaint occurs

Please specify:

Documentation used in fault finding

Fault finding procedure	
Type of fault finding manual:	Workshop Repair Manual ❑ Technical Note ❑ Assisted fault finding ❑
Fault Finding Manual No.:	
Wiring diagram used	
Wiring Diagram Technical Note No.:	
Other documentation	
Title and/or part no.:	

RENAULT

page to print or photocopy - page to print or photocopy - page to print or photocopy

FAULT FINDING LOG

System: All types

Identification of the computer and system parts replaced

Part 1 part no.	
Part 2 part no.	
Part 3 part no.	
Part 4 part no.	
Part 5 part no.	

To be read with the diagnostic tool (Identification screen):

Computer part no.	
Supplier no.	
Program no.	
Software version	
Calibration no.	
VDIAG	

Faults found with the diagnostic tool

Fault no.	Present	Stored	Fault title	Specification

Conditions when fault occurs

State or parameter no.	Name of parameter	Value	Unit

System-specific information

Description:

Additional information

What factors led you to replace the computer?	
What other parts were replaced?	
Other faulty functions?	
Please specify:	

RENAULT

FD 97
Fault finding log

FAULT FINDING LOG

Carminat Informed Navigation System

List of monitored parts: ***navigation system***

Administrative identification

Date	2 0
Log completed by / Telephone	
Dealership details	
VIN	km
Repair Order	Engine

Navigation system configurations

Navigation computer	Renault part no.	
	serial number	Fault finding log
Central communication unit	Renault part no.	
	serial number	Fault finding log
Mapping CD-ROM	Renault part no.	
	serial number	Fault finding log
Languages CD-ROM	Version	
Radio	Renault part no.	
	serial number	Fault finding log

Customer complaint

	1162	Mapping CD-ROM read fault		1161	Problem with opening or closing the screen		1158	Guidance voice message fault
	1170	Navigation guidance fault		1160	Command fault on the front panel of the central communication unit or independent console		1171	Satellite reception problem (GPS)
	999	Intermittent black screen		999	Permanent black screen		999	Location fault

Description of customer complaint:

Is this a recurring customer complaint:	YES ❑	NO ❑
Are there any aftermarket accessories:	YES ❑	NO ❑
If yes, which accessories:		

Conditions under which the customer complaint occurs

	999	Permanent fault		999	Intermittent frequency (give example when this occurs)		999	Low temperature conditions
	999	Very great heat		999	Ambient heat		999	Engine running or hot
	999	When starting		999	Covered area (garage, etc)		999	Green Traffic Message Channel symbol
	999	Red Traffic Message Symbol symbol		999	Green GPS symbol		999	Red GPS symbol
	999	During impacts / vibrations		999	Green CD symbol		999	Red CD symbol

Others

Details:

RENAULT

FD98
Fault finding log

FAULT FINDING LOG

Carminat Informed Navigation System

● Documentation used in fault finding

Fault finding procedure used			
Type of diagnostic manual:	Workshop Repair Manual ❑	Technical Note ❑	Assisted fault finding ❑
Number of diagnostic manual			
Wiring diagram used			
Number of Wiring Diagrams Technical Note:			
Other documentation			
Title and/or part number:			

● Workshop diagnostic

GPS reception status:	COM.ERROR ❑	Search Sat ❑	≥ 3 sat ❑

To check the reception status of the GPS system, follow the procedure below:

Ensure that the vehicle is in a clear area
Wait 15 minutes with the ignition on
In the navigation system, go into the diagnostic: **Navigation → Configuration → System information → diagnostic → GPS status**

Status of red LED on front panel of computer:	Permanently off ❑	Flashes continuously ❑	Permanently lit ❑
Computer CD-ROM reader:	Impossible to insert CD ❑	Impossible to eject CD ❑	CD cannot be read ❑
Mapping CD scratched or dirty:	YES ❑	NO ❑	

Vehicle speed signal diagnostic: does the value change when driving?: ❑ YES ❑ NO
To carry out this diagnostic in the navigation system, follow the procedure in the diagnostic menu: **Navigation → Configuration → System information → fault finding → I/O**

● Conditions under which the fault disappears

❑ Vehicle is restarted
after the ignition is off for > 1 min: YES ❑ NO ❑
after the ignition is off for < 1 min: YES ❑ NO ❑
❑ by operating on: .....
.....
❑ The fault disappears by itself (give details about the time scale):.....
❑ Other (give full details): .....
.....

● Parts returned

Parts:	Navigation computer ❑	UCC ❑	Console ❑	Screen ❑

Note:
Complete and send off a fault finding log for each component that is removed and returned.

RENAULT

FD98
Fault finding log

FAULT FINDING LOG

System: Radio

List of monitored parts: ***Radio system***

Administrative identification

Date	2 0
Log completed by / Telephone	
Dealership details	
VIN	miles
Repair Order	Engine

System configurations

Radio	Renault part number	
	serial number	Fault finding log
CD changer	Renault part number	
	serial number	Fault finding log
Display	Renault part number	
	serial number	Fault finding log

Customer complaint

	1165	Faulty control on radio front panel		1166	Sound fault on a speaker		1167	Faulty control on steering wheel
	1168	Screen display fault (**give details**)		1169	Reception fault (FM, LW, MW)		999	The radio does not switch on
	999	Fault with adjusting the volume according to speed		999	The radio does not switch off		999	The code is always requested when the radio is switched on
	999	Some of the radio's buttons do not work		999	Problem when playing a cassette (**give details**)		999	CD-ROM read fault (**give details**)
	999	The CD changer does not switch on		999	CD changer has no sound			

Description of customer complaint:

Customer complaint reproduced:	YES ❑	NO ❑
Are there any aftermarket accessories fitted to the vehicle:	YES ❑	NO ❑
If yes, which:		

Conditions under which the customer complaint occurs

	999	Permanent fault		999	Intermittent frequency (give example when this occurs)		999	Low temperature conditions
	999	Very high temperatures		999	Ambient heat		999	Engine running or hot
	011	When switching on the ignition		999	When starting		005	While driving
	009	Sudden fault						

Others

Details:

RENAULT

FD99
Fault finding log

FAULT FINDING LOG

System: Radio

- **Documentation used in fault finding**

Fault finding procedure used	
Type of fault finding manual:	Repair Manual ❑ Technical Note ❑ Assisted fault finding ❑
Number of fault finding manual	
Wiring diagram used	
Number of Wiring Diagrams Technical Note:	
Other documentation	
Title and/or part number:	

- **Workshop fault finding**

- **Conditions under which the fault disappears**

- **Parts returned**

Parts:	Radio ❑	CD changer ❑	Speakers ❑	Screen ❑

Note:
Complete and send off a fault finding log for each component that is removed and returned.

RENAULT

page to print or photocopy - page to print or photocopy - page to print or photocopy

RENAULT

TECHNICAL NOTE 3701A

Vehicle	Type
TWINGO	X06X
KANGOO	XCXX
CLIO II	XBXX
CLIO III	XRXX
MODUS	XPXX
LOGAN	XSXX
MEGANE/SCENIC	XAXX
MEGANE II	XMXX
SCENIC II	JMXX
LAGUNA	X56X
LAGUNA II	XGXX
ESPACE III	XEXX
ESPACE VI	XKXX
AVANTIME	DEXX
VELSATIS	XJXX
MASTER	XDXX
MASTER PROPULSION	XHXX
TRAFIC II	XLXX

FAULT FINDING - AUDIO EQUIPMENT

This note cancels and replaces Technical Notes 3480A, 3656A, 3702A and 3383A

77 11 319 522 Edition 2 - SEPTEMBER EDITION ANGLAISE

"The repair procedures given by the Manufacturer in this document are based on the technical specifications current when it was prepared.

The procedures may be modified as a result of changes introduced by the manufacturer in the production of the various component units and accessories from which his vehicles are constructed."

All rights reserved by RENAULT s.a.s.

Copying or translating, in part or in full, of this document or use of the service part reference numbering system is prohibited without the prior written authority of RENAULT s.a.s.

© Renault s.a.s. 2005

Contents

	Page
86A RADIO	
General Information	86A-1
Fault finding log	86A-5
Security code recovery procedure	86A-7
Security code	86A-8
Configuration - Setting	86A-11
Connections	86A-12
Self-test procedure	86A-13
Customer complaints	86A-14
Fault finding chart	86A-15
Recovering a jammed CD	86A-29

The tuner-amplifier has a test menu (see radio self-test procedure) to carry out repair operations or fault finding.

The radio will operate for approximately 20 minutes without the ignition being switched to the accessories position. The radio beeps then switches off.

Diagram:

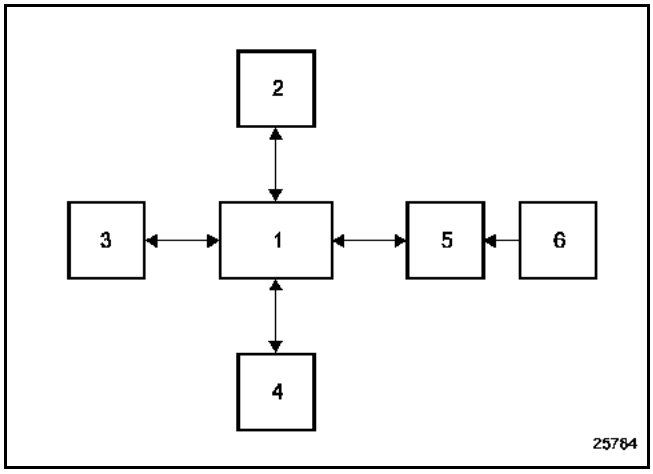

1 Radio
2 Aerial
3 CD changer
4 Speakers/tweeter speakers
5 Display
6 Steering wheel controls

Special features of radios in the PN range:
PN0: radio with built-in display.
PN1: radio with remote display.
PN2: radio and cassette player with built-in display.
PN3: radio and cassette player with remote display.
PN4: radio and CD player with built-in display.
PN5: radio and CD player with remote display.

Notes:
- All radios are designed to control a CD changer.
- There is a special procedure for replacing the CD changer located in the dashboard front panel.
- According to the vehicle version, the remote displays may have a 24 or 30-track connector or two 15-track connectors. This display may be built into the instrument panel.

The radio features allow you to:
– listen to the radio (four geographical zones can be programmed for FM radio),
– display the name of the station using RDS which automatically switches to the best transmitter (AF function),
– receive traffic news (I Traffic function),
– receive news flashes and emergency bulletins (I News function).
– receive public safety emergency bulletins (PTY 31).

RADIO FUNCTION

The tuner has three selection modes displayed on the screen and accessible from the radio front panel:
– manual mode (MANU),
– preset mode (PRESET),
– alphabetical mode (LIST).

CASSETTE FUNCTION

The cassette plays automatically once cassette mode has been selected using the steering wheel control or the front panel.

Only the Dolby fast-forward and rewind with search controls can be selected by specific buttons.

Note:
The Mute function, accessed via the voice synthesiser or the steering wheel control, stops the cassette playing.

CD FUNCTION

The CD player can play conventional discs and any audio tracks on a CD-ROM.

CDs can be played in order or tracks can be chosen at random.

If a CD changer is being used, random play is possible on only one of the possible 6 compact discs.

THERMAL PROTECTION

If the radio temperature is too high for it to function properly, the volume is automatically reduced (without changing the volume shown in the display).

Should one of the speaker tracks short circuit, the supply to the amplifier will be cut off.

VOLUME CONTROL

The volume can be increased according to the vehicle speed. To operate this function:
select the desired volume adjustment curve by using the Expert mode (press and hold the Source button until a bleep is heard): SPEED 5 for maximum increase, 0 to cancel the increase.

FAULT FINDING LOG

System: Radio

List of monitored parts: Radio system

Administrative identification

Date	2 0
Log completed by/tel.	
Dealership details	
VIN	Mileage
Repair Order	Engine

System configurations

Radio	Renault part number:	
	series number	Fault finding log
CD changer	Renault part number:	
	series number	Fault finding log
Display	Renault part number:	
	series number	Fault finding log

Customer complaint

	1165	Faulty control on radio front panel		1166	Sound fault on a speaker		1167	Faulty control on steering wheel
	1168	Screen display fault (give details)		1169	Reception fault (FM, LW, MW)		999	The radio does not switch on
	999	Fault with adjusting the volume according to speed		999	The radio does not switch off		999	The code is always requested when the radio is switched on
	999	Some of the radio's buttons do not work		999	Cassette playing fault (give details)		999	CD-ROM read fault (give details)
	999	The CD changer does not switch on		999	CD changer has no sound			

Description of customer complaint:

Customer complaint reproduced:	YES ❑	NO ❑
Are there any retrofitted accessories on the vehicle?	YES ❑	NO ❑
If yes, which:		

Conditions under which the customer complaint occurs

	999	Permanent fault		999	Intermittent frequency (when fault occurs)		999	Low temperatures
	999	Very high temperatures		999	Ambient heat		999	Engine running or warm
	011	When the ignition is switched on		999	When starting		005	While driving
	009	Sudden fault						

Others

Comments:

RENAULT

page to print or photocopy - page to print or photocopy - page to print or photocopy

FAULT FINDING LOG

System: Radio

- Documentation used in fault finding

Fault finding procedure used	
Type of fault finding manual:	Workshop Repair Manual ❑ Technical Note ❑ Assisted fault finding ❑
Fault finding manual number	
Wiring diagram used	
Wiring Diagram Technical Note Number:	
Other documentation	
Title and/or part number:	

- Workshop fault finding

- Conditions under which fault disappears

- Parts returned

Parts:	Radio ❑	CD changer ❑	Speakers ❑	Screen ❑

Note:
Complete and send off a fault finding log for each component that is removed and returned.

RENAULT

page to print or photocopy - page to print or photocopy - page to print or photocopy

Recovery of the pre-code is carried out by removing the TUNER-AMPLIFIER and by taking the four digits that follow the letter T on the barcode. Pictured below are 2 barcodes found in the radio range used:

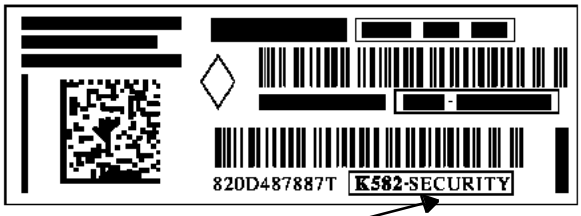

Pre-code

Radio series number

The pre-code is found in this area.
The pre-code is Q916 in this example

THE VIN MUST BE ENTERED IN ALL 4 SOLUTIONS

4 solutions to recover the radio code:

1 Only the VIN is available: connect to code management on Renault Net and enter the number. The code server gives the original radio code entered in the World Vehicle Database (BVM).

If the code has not been entered in the World Vehicle Database or is incorrect when the code is entered in the radio, then follow the procedure below:

2 The pre-code is available: go back into code management on Renault.Net, enter the pre-code (see photos) then obtain the radio code. For radios in the NR range, the pre-code is obtained in the self-test procedure mode by pressing buttons 1, 6 and i.

3 For older vehicles which do not have a radio pre-code, enter the series number of the radio again. For example, for Philips radio, this code starts with RN. In the photo of the radio, this code is RN277F30194601.

If this code is correct, the radio operates again; if it does not operate, follow the procedure below:

4 Write a help message to be sent to the assistance unit.

IF A NEW CODE IS CREATED, THE VIN IS UNKNOWN; SEND A HELP MESSAGE TO RENAULT NET CODE MANAGEMENT TO UPDATE THE DATABASE.

The radio is protected by a four digit code. This code must be entered via the control satellite or the radio keypad each time the battery is disconnected.

Entering the code with the control on the steering wheel:
Press the lower button on the control to confirm an entry.

Entry via the radio:
Enter the digits using buttons 1, 2, 3 and 4, and then confirm with button 6.

If the code is entered incorrectly, the radio will be locked (1 minute for the first error, 2 minutes for the second error, 4 minutes for the third error, etc.
32 minutes maximum).

Some configurations must be set after the code has been entered for the first time (see the Configuration Section). These settings are stored when the battery is disconnected.

Reminder:
The radio will operate for approximately 2 minutes in scrambled mode without the code having been entered (with regular warning beeps).

If the vehicle is equipped with a CD changer in the front panel, a code is exchanged between the CD changer and the radio.
- If a new CD changer is fitted, the radio code is programmed when the battery or CD changer is connected.
- If the radio is replaced, enter the security code of the old radio connected to the CD changer. The CD changer is programmed with the code for the new radio.
- If the old radio code is lost, the changer code can be cleared using the clearing code. The clearing code is issued by the Techline, server, etc.

Note:
If there is a configuration error, you can return to scrambled mode by pressing the 2 and 5 buttons at the same time as switching the power on. Then wait 2 minutes.

Note:
The CD changer is supplied uncoded. When it is installed in the vehicle, the CD changer is programmed with the radio supply code.

Reminder:
The radio will operate for approximately 2 minutes in scrambled mode without the code having been entered (with regular warning beeps).

IMPORTANT
If the vehicle is fitted with a top of the range navigation system (ITS), enter the radio code in the following way:
1. switch on the system by activating the vehicle's + after ignition feed,
2. wait 2 minutes: scrambled mode with beeps from the speakers, then code request screen appears,
3. enter the radio code using the ITS keypad: move the cursor with the central control and press to confirm.
4. switch off the ignition.

THE DISPLAY SHOWS 'CODE' OR '0000'

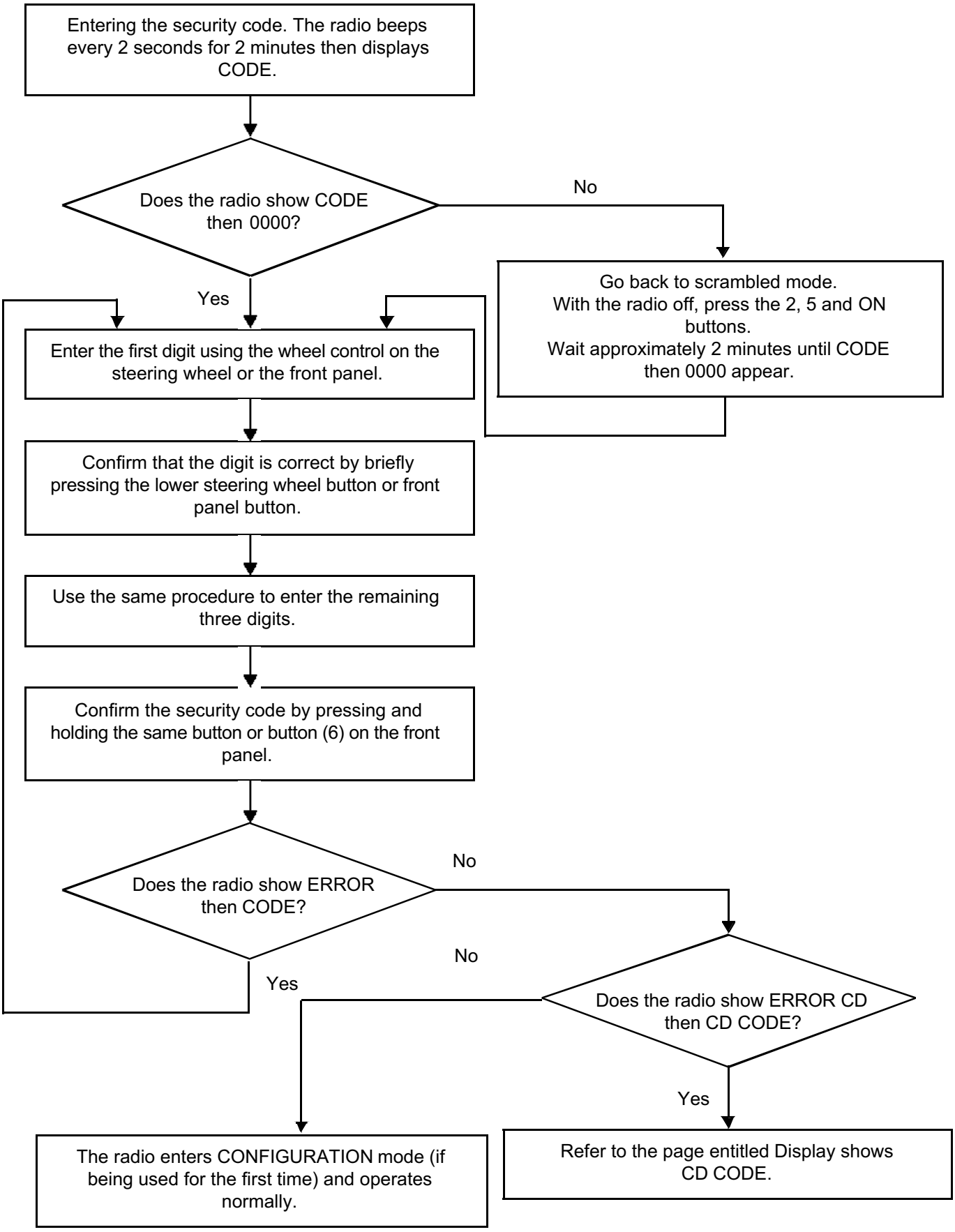

THE DISPLAY SHOWS 'CD CODE'

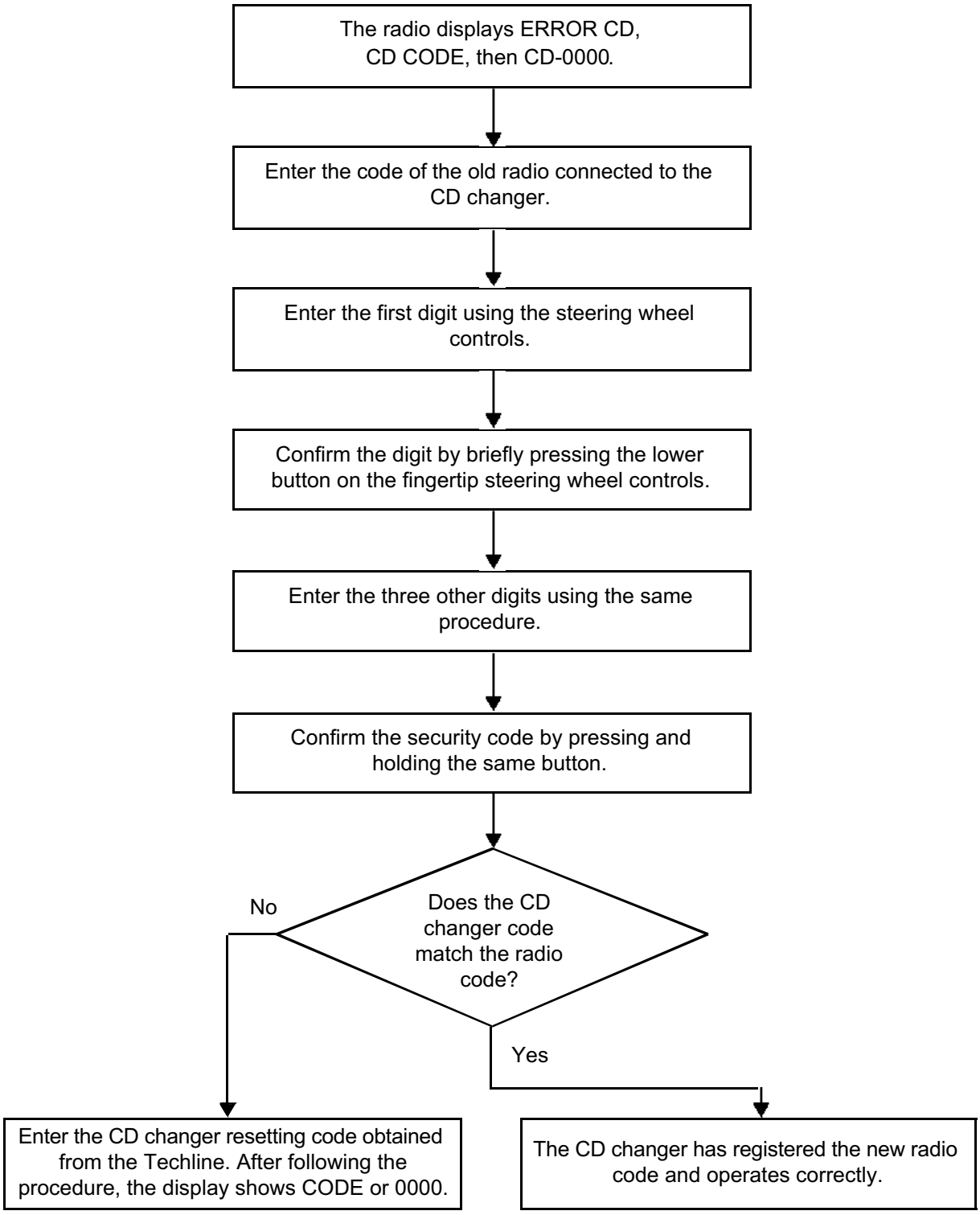

CONFIGURATIONS

NOTE:
To select the zone in which the Tuner is to be used, press buttons 2 and 5, at the same time as the equipment is switched on. Then wait for approximately 2 minutes. Enter the four digit code then:

- select the tone curve appropriate for the vehicle
  - 0: no regulation
  - 1: Twingo
  - 2: Clio
  - 3: Mégane/Scénic
  - 4: Laguna
  - 5: Vel Satis - Espace

- select the relevant zone:
  - America
  - Japan
  - Asia
  - Arabia
  - Others (Europe, Africa, other)

Note:
These configurations are not required when the secret code is entered after the power supply has been cut.

SETTINGS

To enter configuration mode (Expert mode), press and hold the Source button (4 seconds) until you hear a bleep. This allows you to adjust the following functions:

NR range:
- AF mode activation (automatic retuning),
- vehicle speed-dependent volume control (5 for maximum regulation, 0 to cancel regulation),
- Loudness mode activation

PN range:
- AF mode activation (automatic retuning),
- vehicle speed-dependent volume control (5 for maximum regulation, 0 to cancel regulation),
- Loudness mode activation,
- Assisted tuner mode activation,
- configuration of the number of speakers (2 or 4),
- manual or dynamic list selection.

PN6 radio:
- AF mode activation (automatic retuning),
- vehicle speed-dependent volume control (5 for maximum regulation, 0 to cancel regulation),
- Loudness mode activation,
- Assisted tuner mode activation,
- configuration of the number of speakers (2 or 4),
- manual or dynamic list selection.
- activation of data storage in accordance with the RENAULT Card: CARD ON/OFF. To operate, the radio must be accompanied by the navigation system.

To allocate the tracks for the different functions that are connected to the radio (CD changer, steering wheel control, display, aerial), refer to the Wiring Diagrams Technical Note corresponding to the vehicle.

Radio: see Wiring diagrams Technical Note, vehicle, code 261

CD changer: see Wiring diagrams Technical Note, vehicle, code 1272

Display: see Wiring diagrams Technical Note, vehicle, code 1127
For displays which are connected to the instrument panel, the code is 247

Steering wheel control: see Wiring diagrams Technical Note, vehicle, code 325

Aerial: see Wiring diagrams Technical Note, vehicle, code 886

The self-test procedure mode of the previous generation radios (PN0-6) allows certain main functions to be tested:

- by pressing buttons 2 and 4 at the same time, the speakers can be tested. They are supplied one by one; the display enables the connections and signals from each speaker to be checked,
- by pressing buttons 1 and 6 at the same time, the reception level can be tested (after frequency is displayed),
  - 9 or letter: good reception,
  - less than 3: poor reception,
  - if 2: total loss of stereo.

The self-test procedure mode of the new generation radios (NR4/5) enables certain main functions to be tested using the combination of buttons 1, 6 and i. The messages will be displayed in the following way:

- Radio pre-code displays one letter and 3 digits to avoid removal of the radio,
- speaker test with two bleeps (bass - treble) from the speakers, with the tested speakers shown on the display (front left-hand H01, front right-hand H02, rear right-hand H03, rear left-hand H04),
- displays the frequencies and levels of the radio sensors,
- software version displayed, displays fault finding for the connected aerial if the aerial is supplied by a coaxial cable; in this case, the display shows H15 with X = 0, 1 or 2 depending on the aerial status (0: open circuit, 1: short circuit to earth, 2: power consumption),
- audio test loudness OFF (H08), cuts any loudness for an audio test.

Note:
Also displays source use time and total time in 10 minute slots (Tuner (H09)/CD (H10)/cassette (H11)/CD changer (H12)/auxiliary (13)/MP (H14)/Total (H15)).

THE RADIO BEEPS APPROXIMATELY EVERY 2 SECONDS	ALP 1
THE RADIO DOES NOT WORK (NO SOUND) WHEN THE RADIO ON BUTTON IS PRESSED	ALP 2
THE RADIO DOES NOT SWITCH ON AUTOMATICALLY WHEN + ACCESSORIES FEED IS SWITCHED ON OR SWITCHES OFF AFTER 20 MINUTES	ALP 3
THE RADIO IS SWITCHED ON, BUT THE DISPLAY AND SATELLITE CONTROLS DO NOT WORK	ALP 4
THE SATELLITE CONTROLS DO NOT WORK	ALP 5
RADIO RECEPTION FAULTS	ALP 6
THE VOLUME DOES NOT INCREASE WITH THE VEHICLE SPEED	ALP 7
LIGHTING DOES NOT CHANGE WHEN THE VEHICLE LIGHTS ARE SWITCHED ON	ALP 8
NO SOUND CUT-OUT DURING CARMINAT OR HANDS-FREE KIT MESSAGES	ALP 9
THE INFRARED REMOTE CONTROL DOES NOT WORK	ALP 10

ALP 1	The radio beeps approximately every 2 seconds

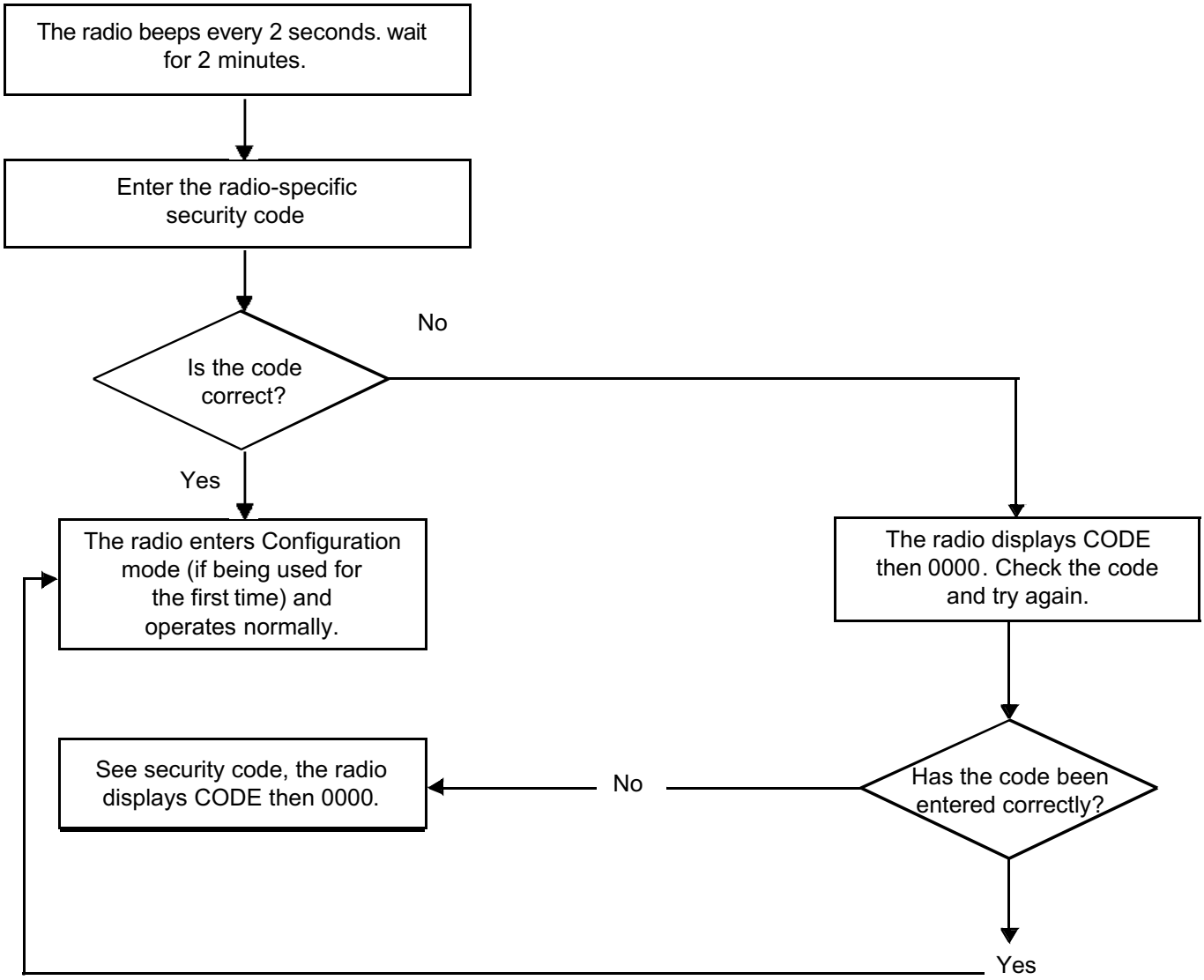

ALP 2	The radio does not operate when the ON button is pressed

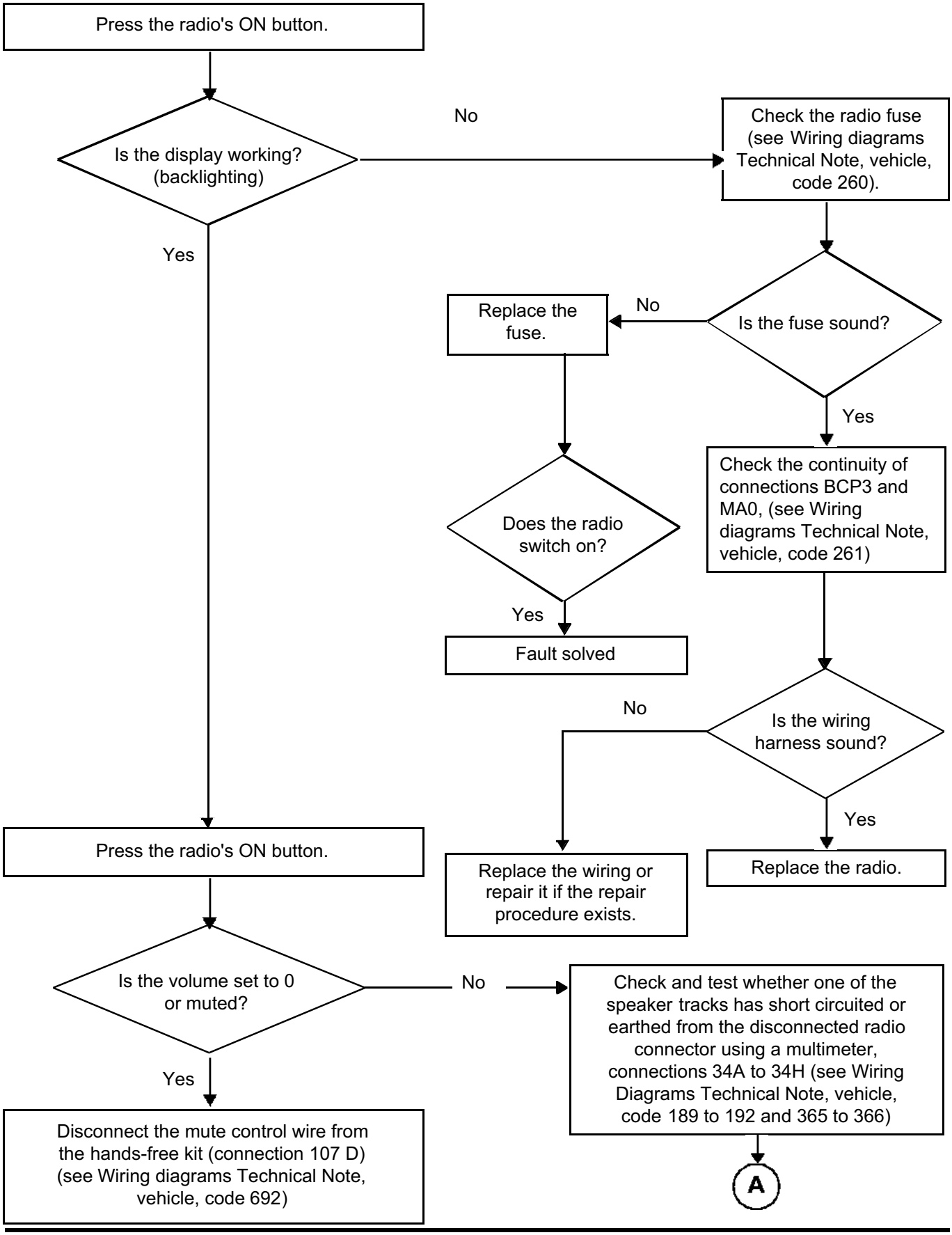

ALP 2 CONTINUED	

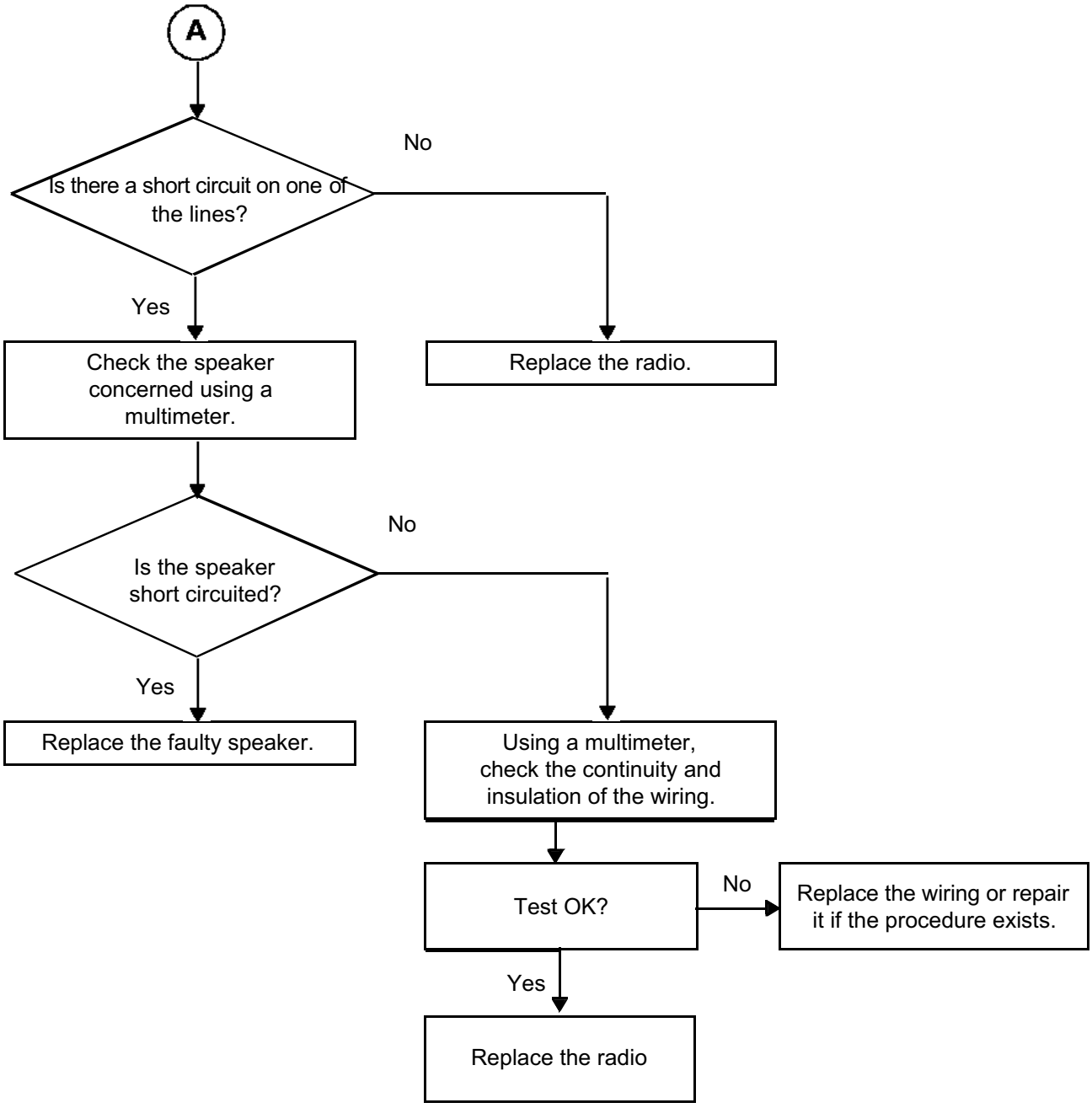

ALP 3	The radio does not switch on automatically or switches off after 20 minutes

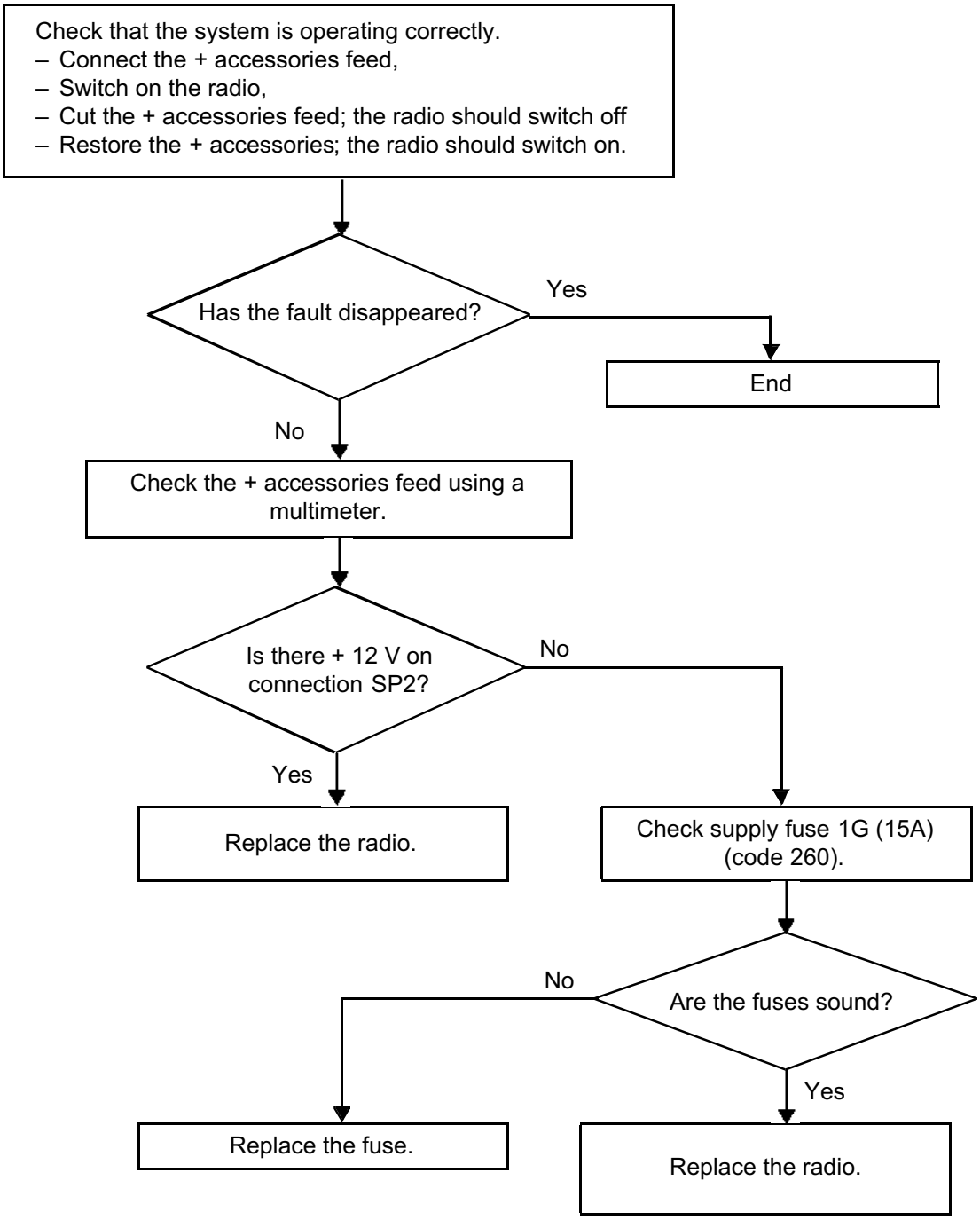

EXCEPT ESPACE IV, SCENIC II

ALP 4	The radio is switched on, but the display and control satellite do not operate

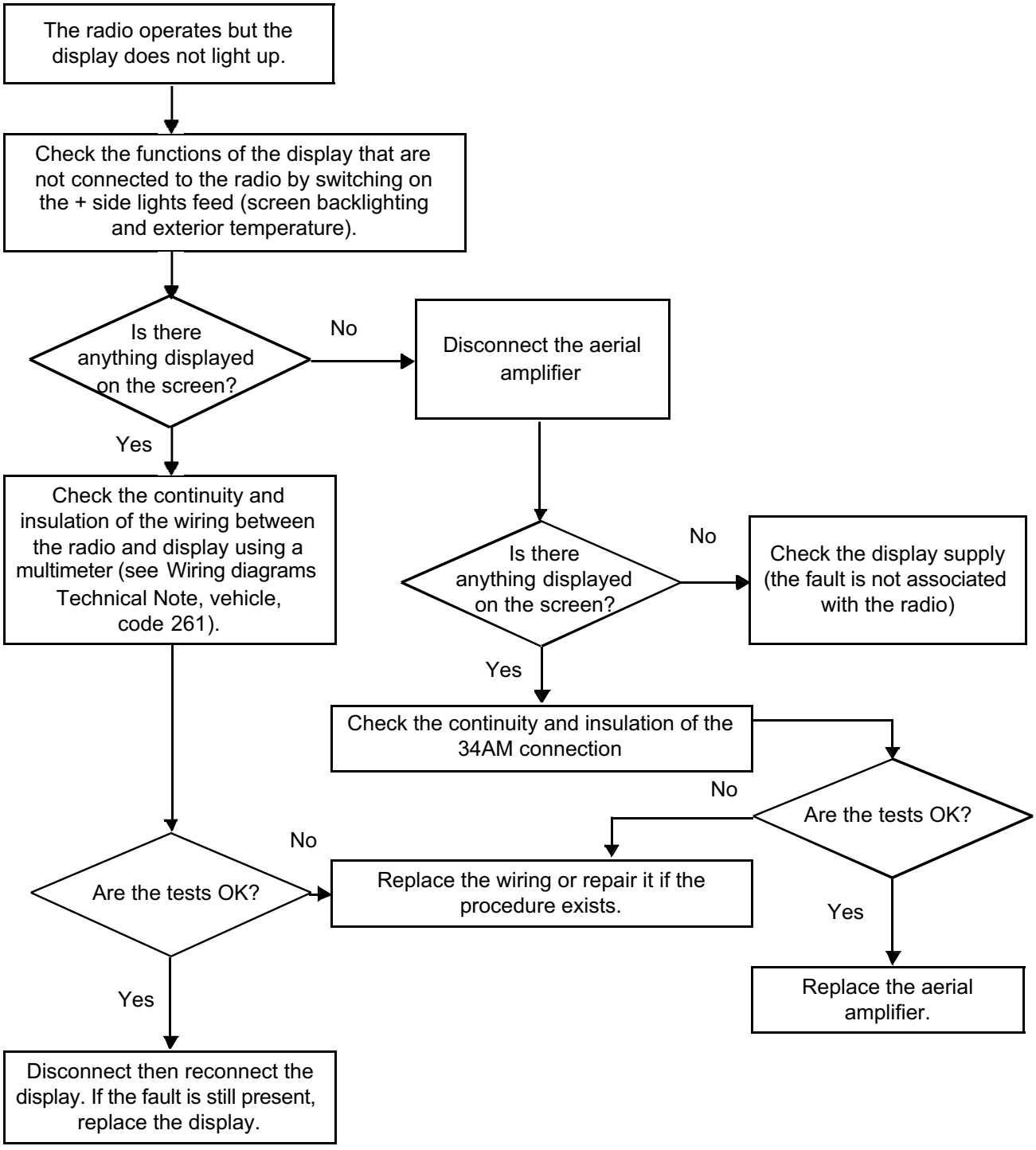

ESPACE IV, SCENIC II

ALP 4	The radio is switched on, but the display and control satellite do not operate

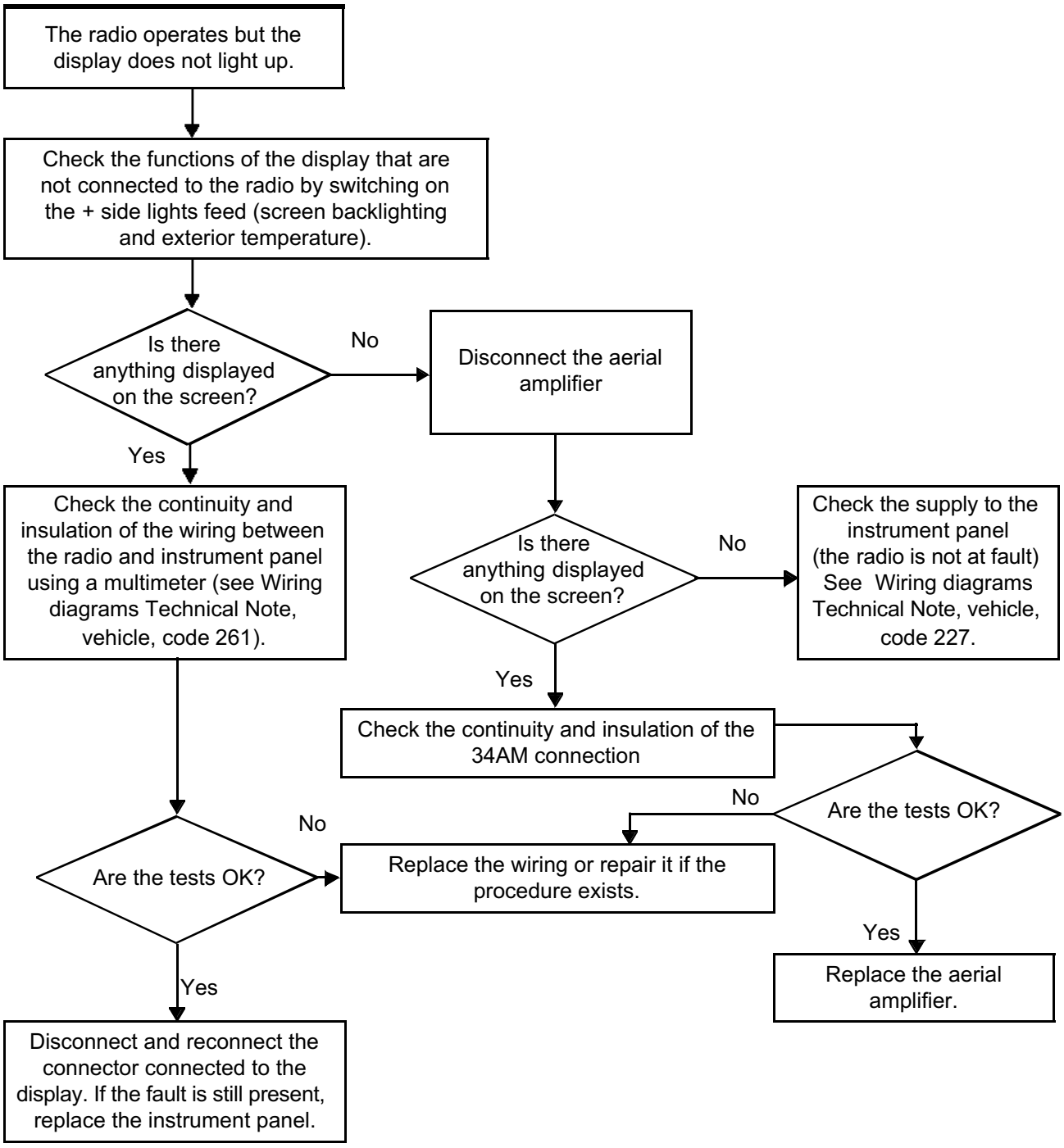

ALP 5	The satellite controls do not work

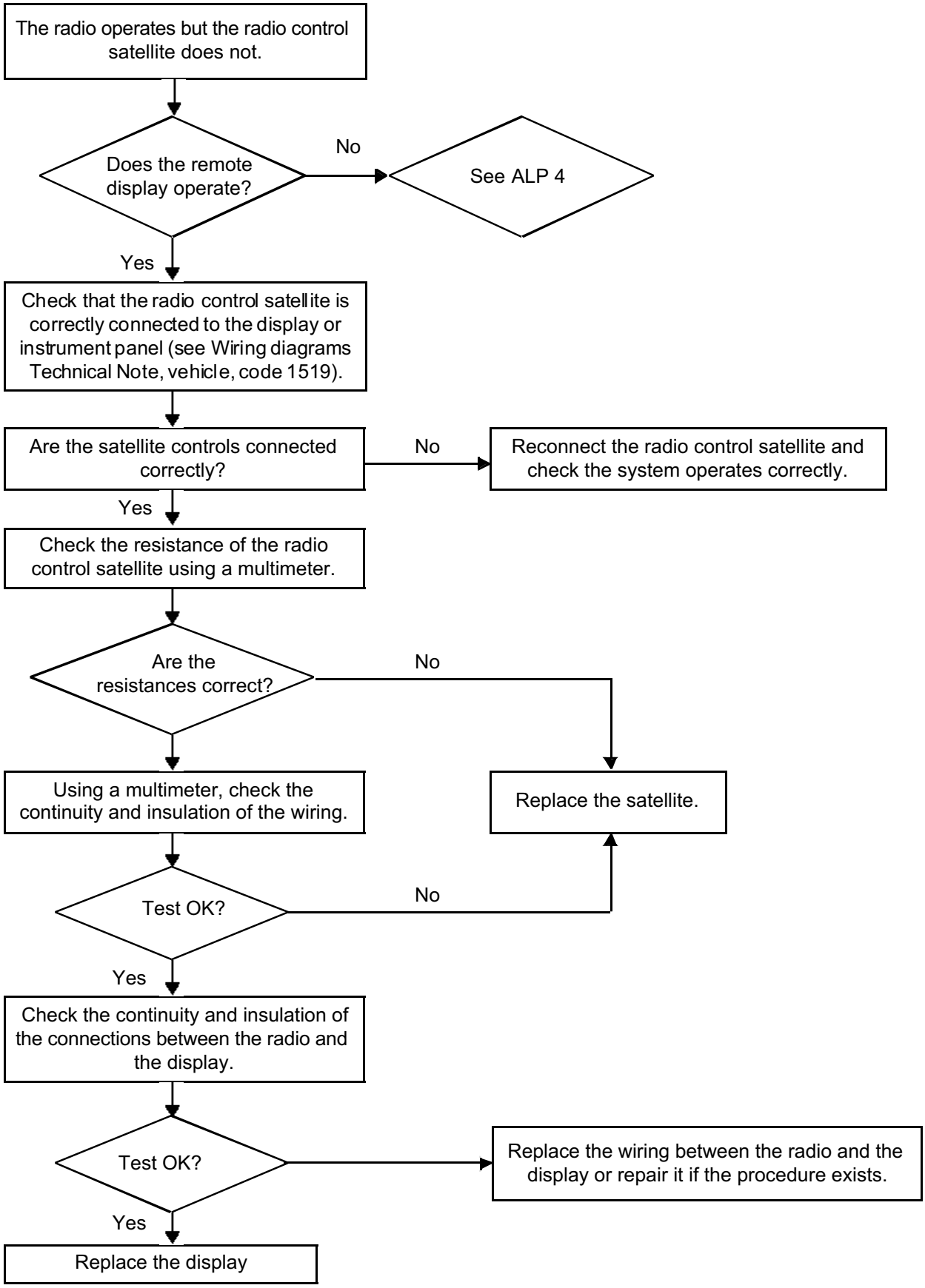

ALP 6	Radio reception faults

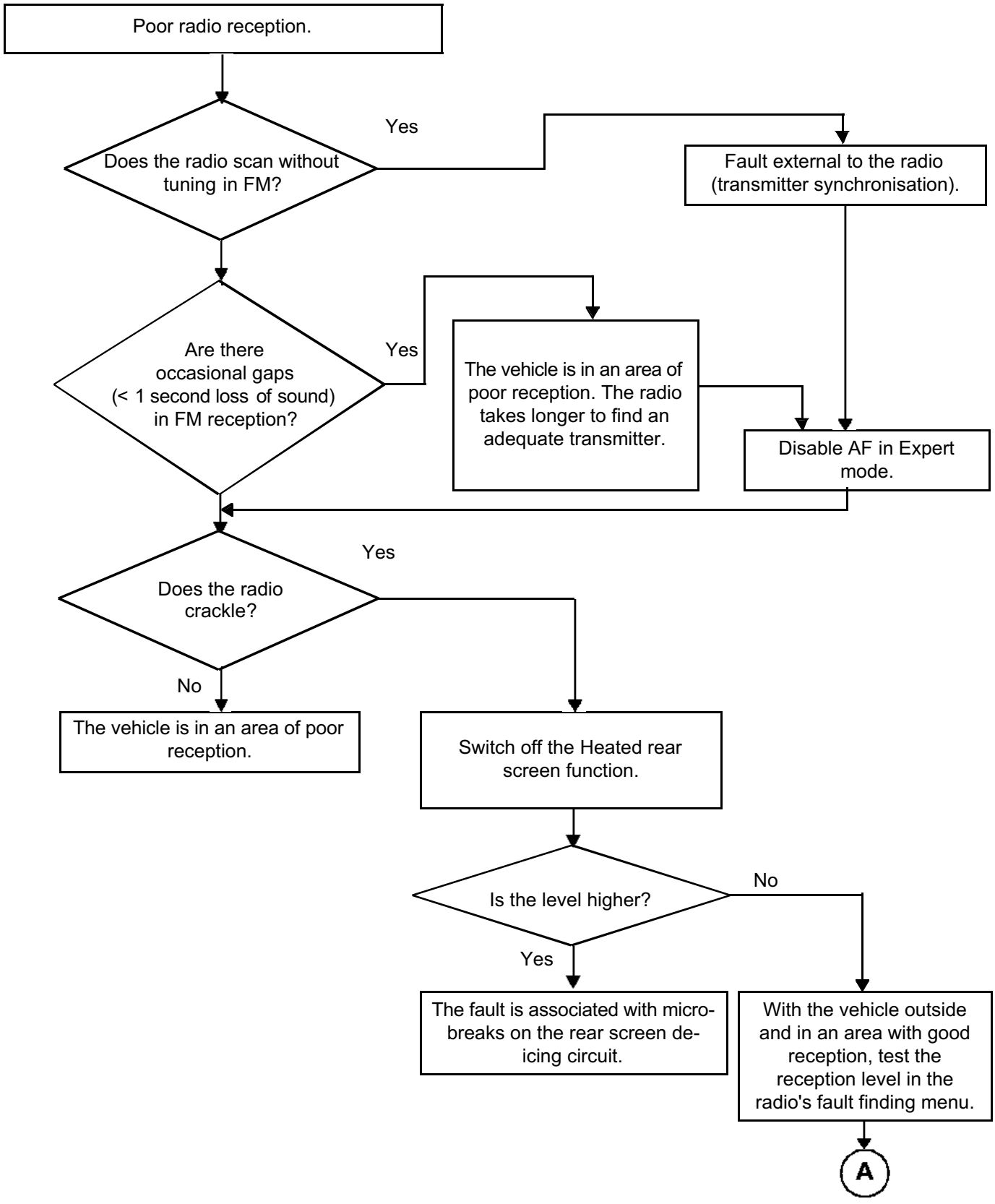

ALP 6 CONTINUED 1	

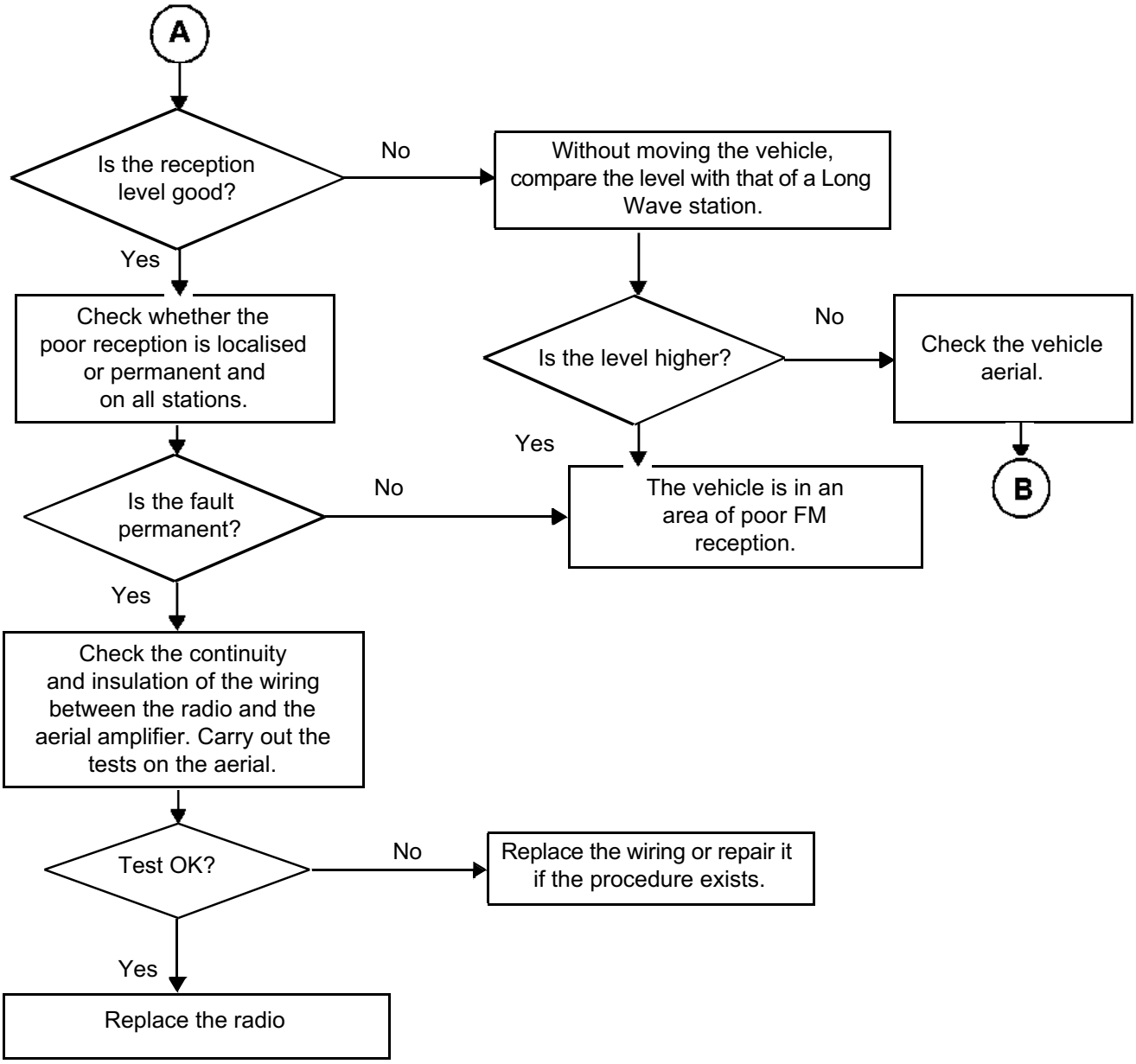

ALP 6 CONTINUED 2	

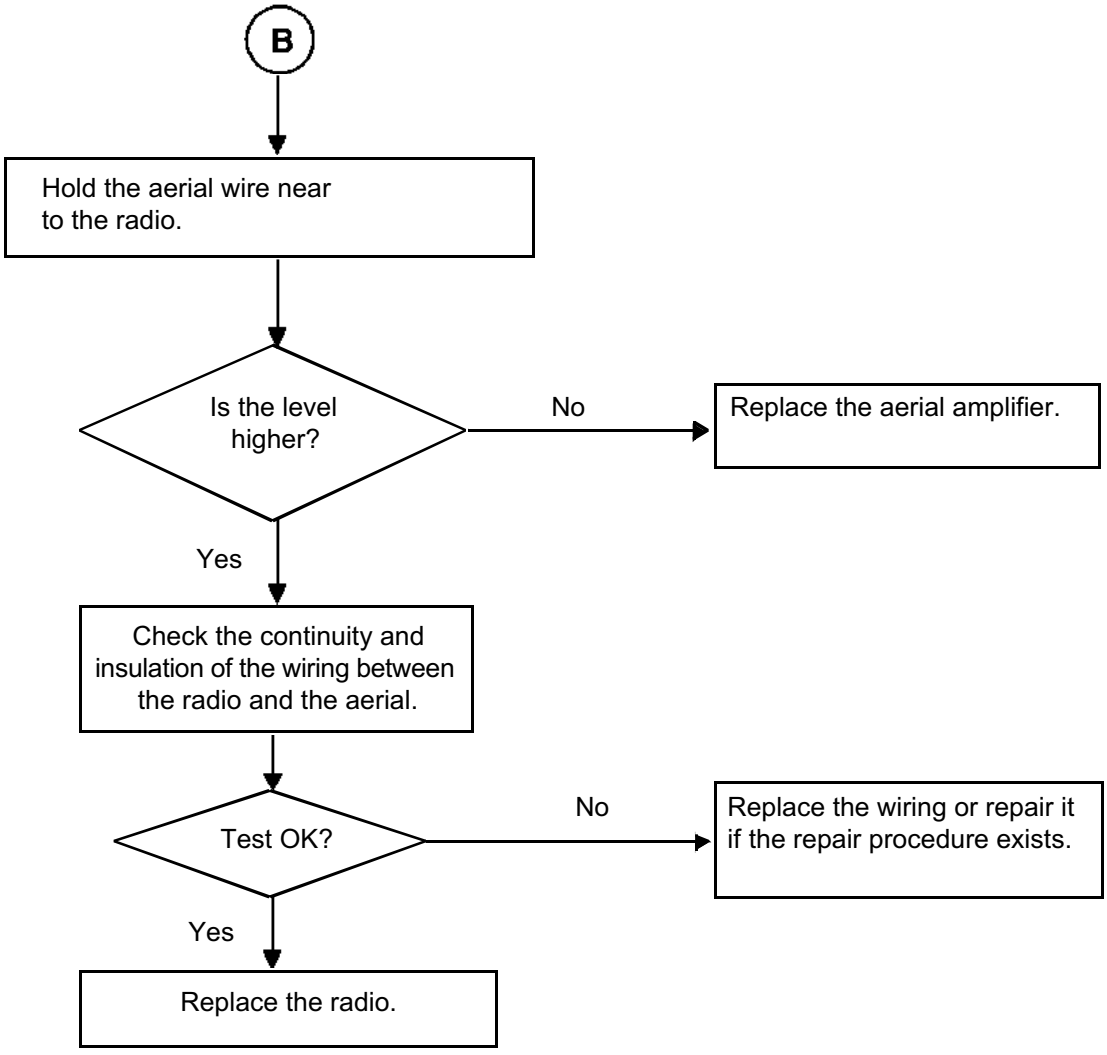

ALP 7	The volume does not increase with the vehicle speed

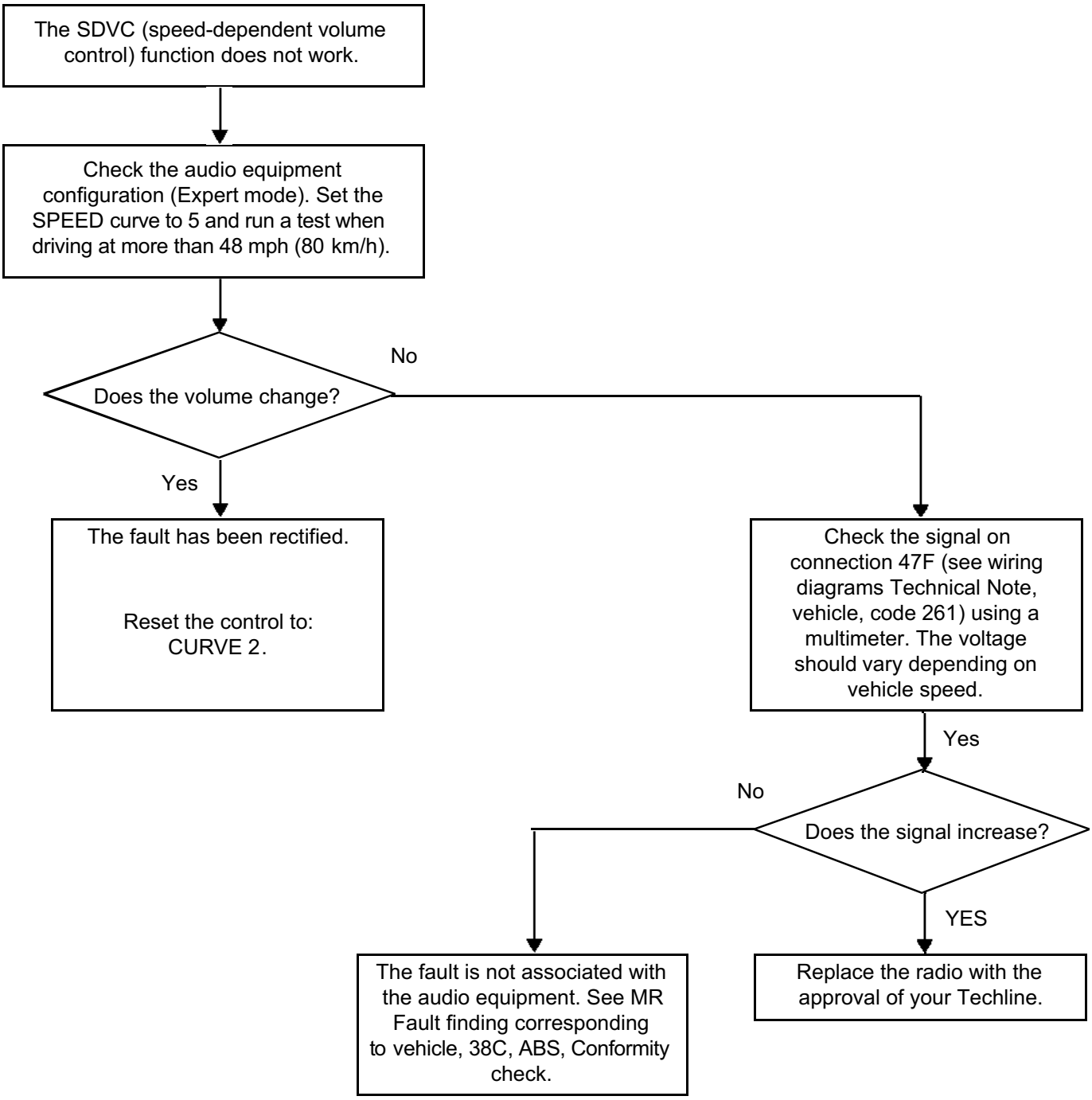

ALP 8	Lighting does not change when the vehicle lights are switched on

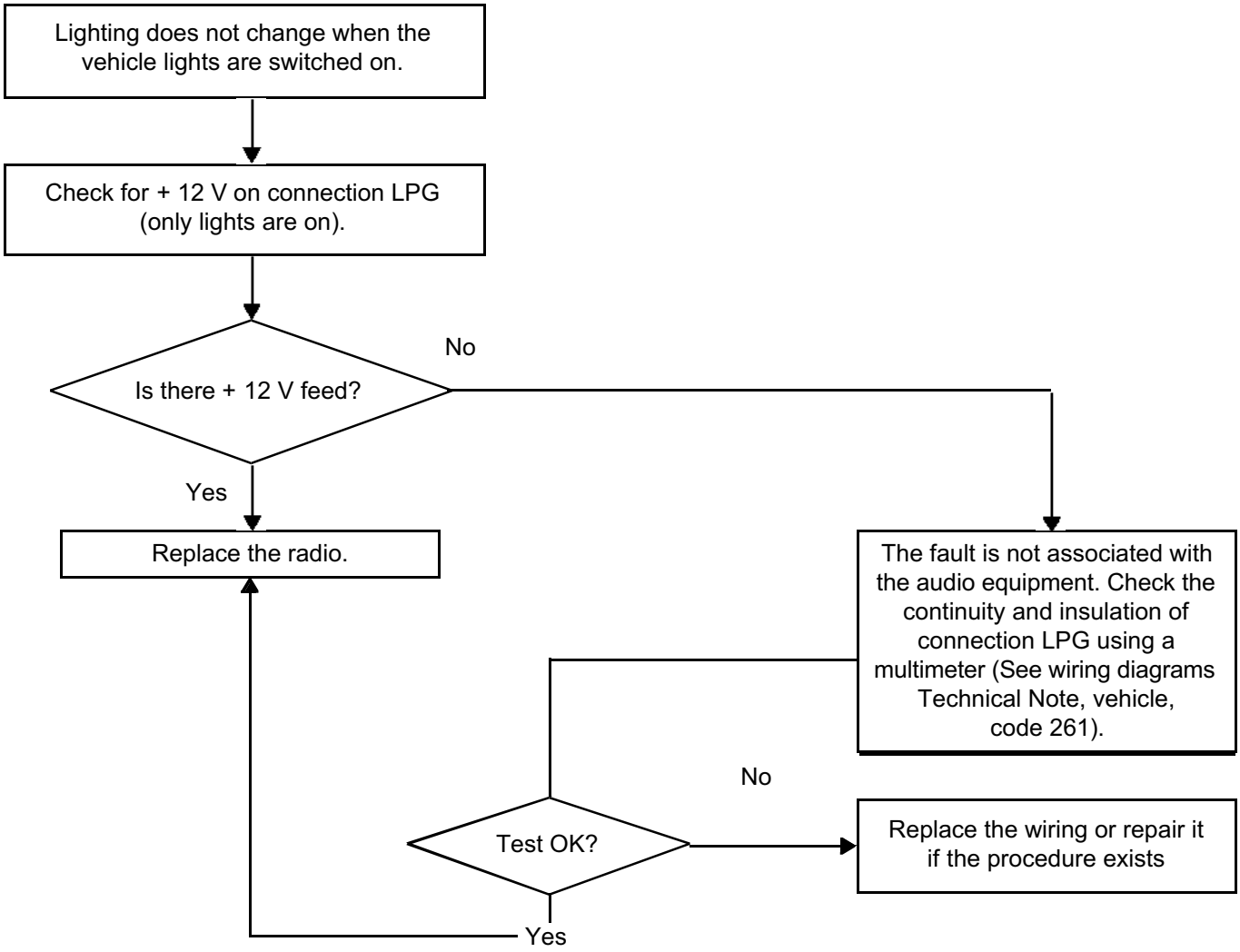

ALP 9	No sound muting during Carminat messages, voice synthesiser or hands-free kit

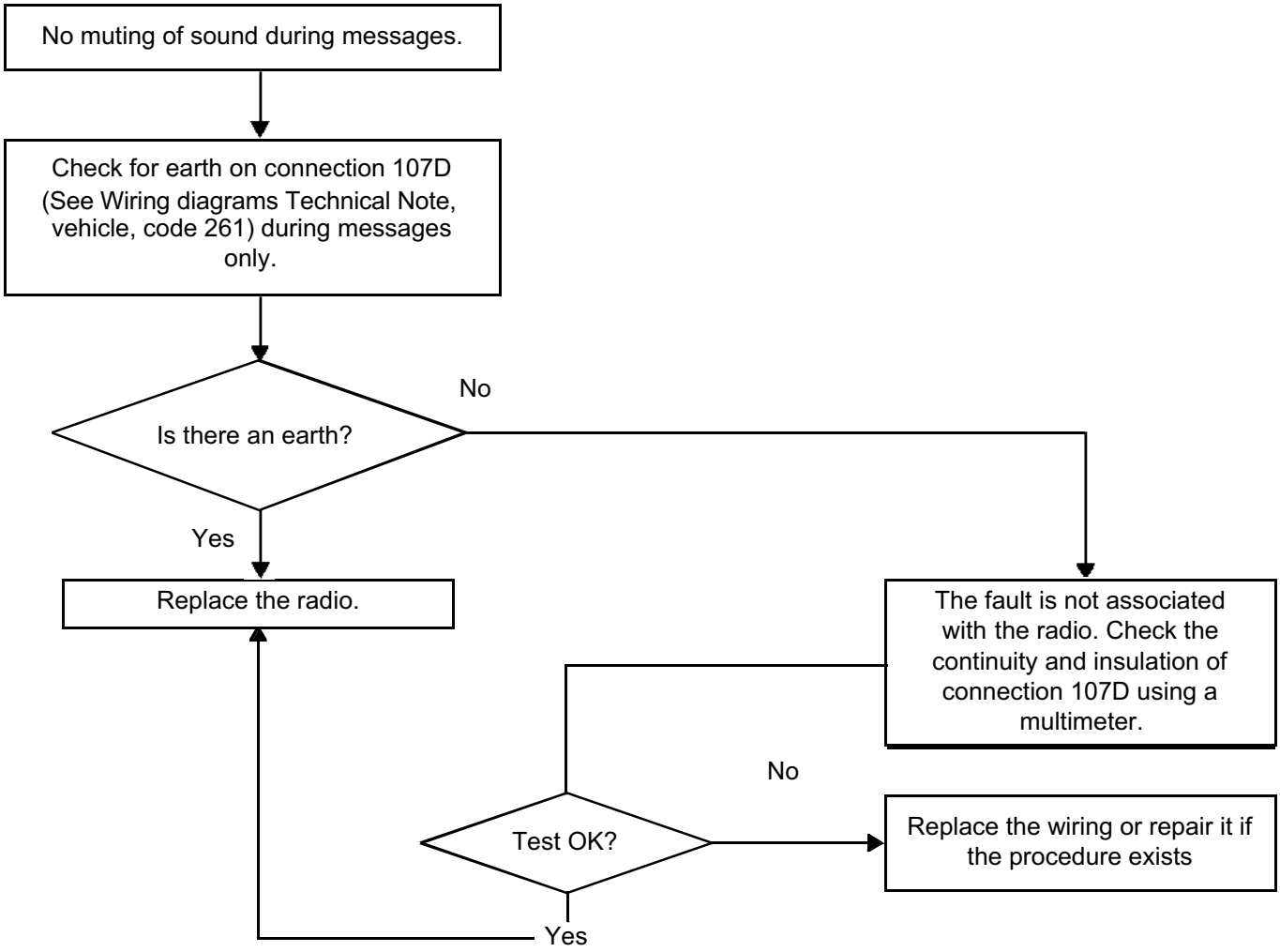

ALP 10	The infrared remote control does not operate (PN6)

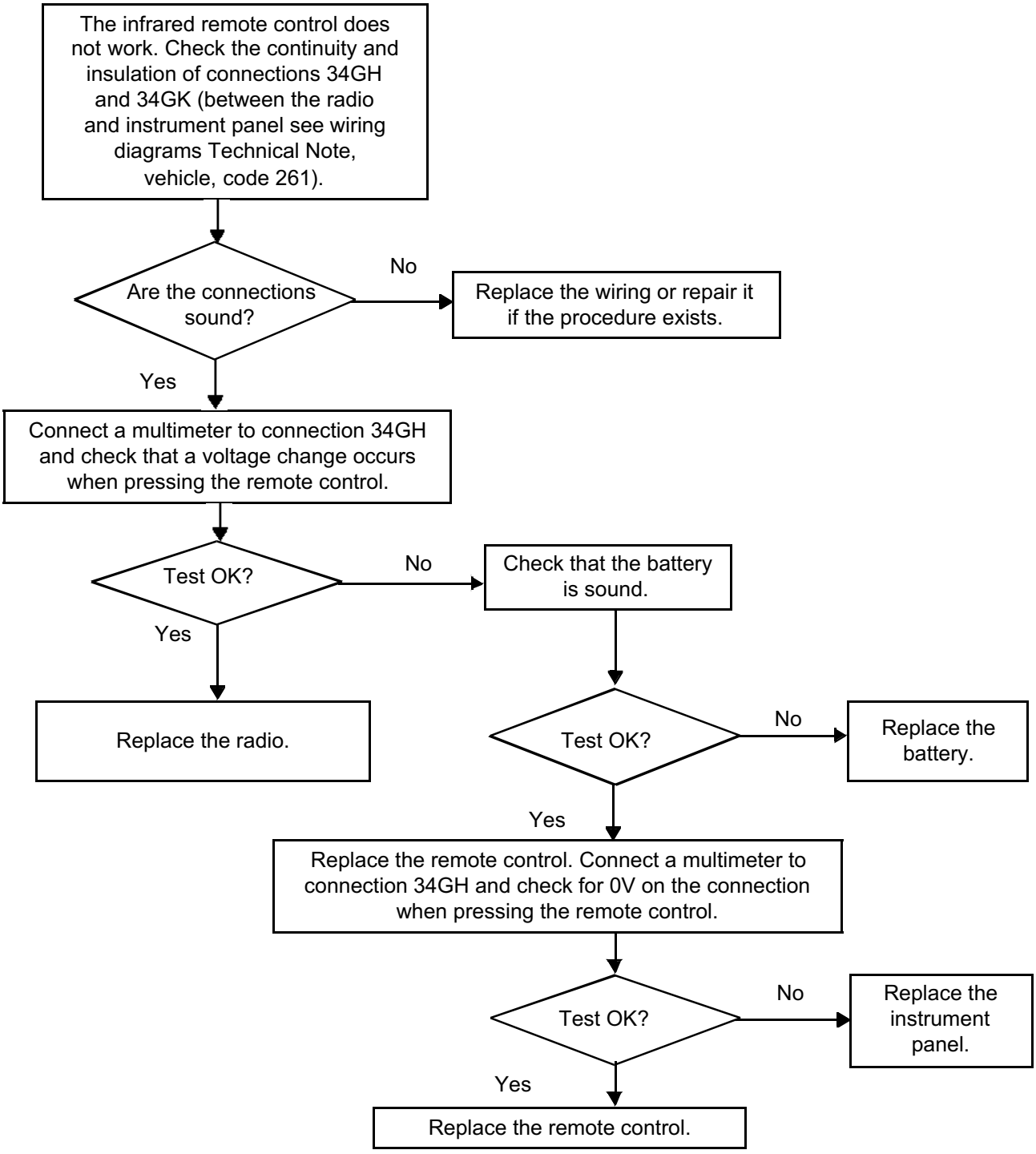

RADIO

First solution

If the electric ejector motor is operational, eject the CD using a 4.5 V battery to supply the electric motor (B) (attach the + wire to contact (1) and the - wire to contact (2) when ejecting the CD).

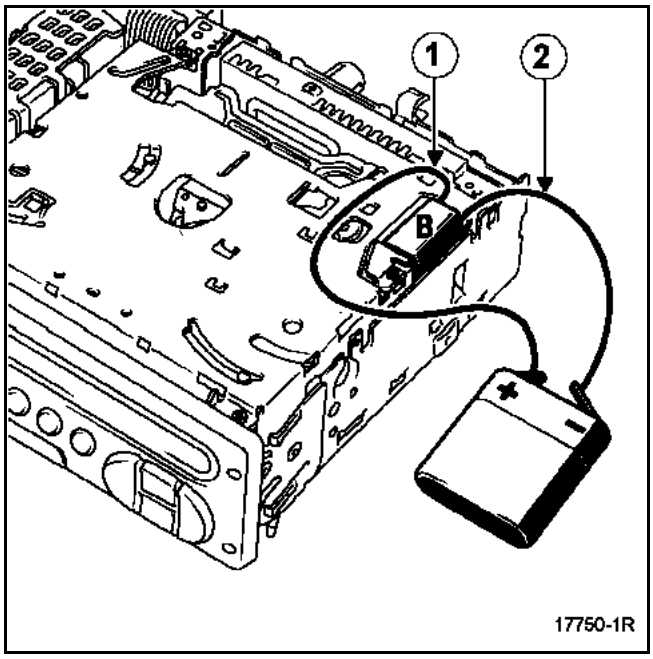

RADIO

Second solution

If the electric ejector motor is not operational, remove the bolt (C) and release the electric motor (B).

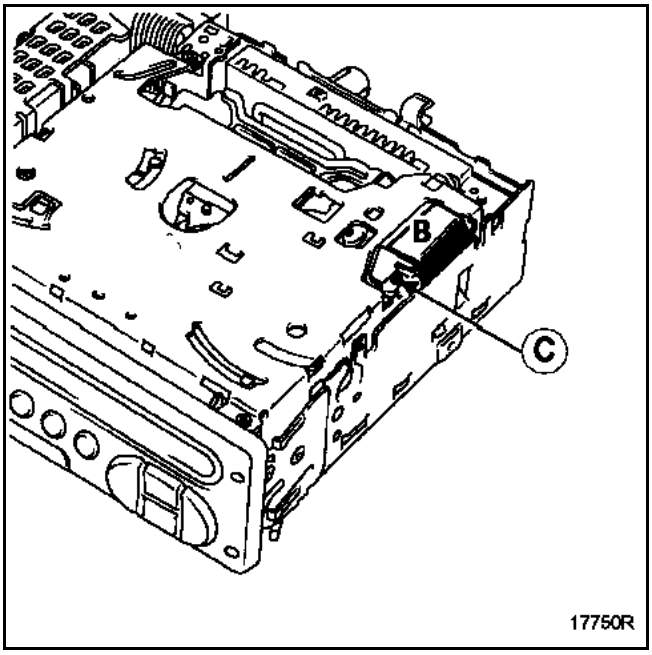

Turn toothed wheel (D) by hand in a clockwise direction until the CD is ejected.

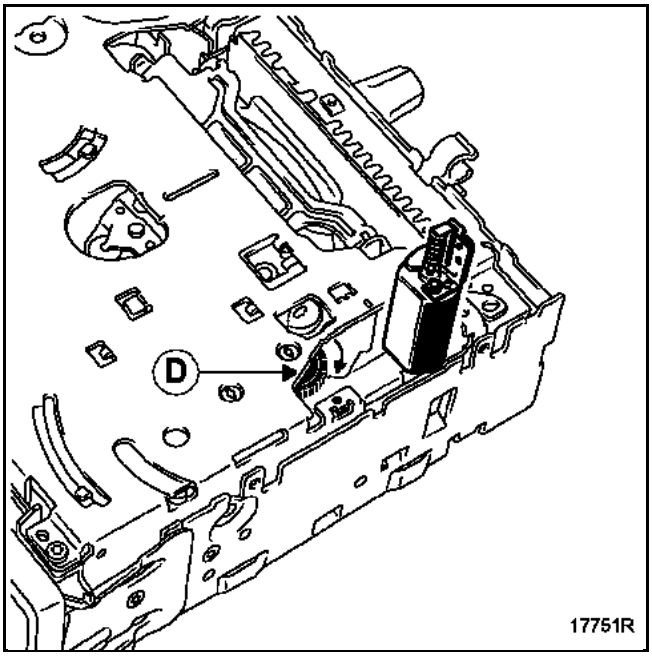

Before replacing the radio:

- refit the electric motor and attach it using the bolt (second solution only),
- refit the casing.

CHANGER IN THE DASHBOARD

REMOVAL

Remove the two bolts (A).

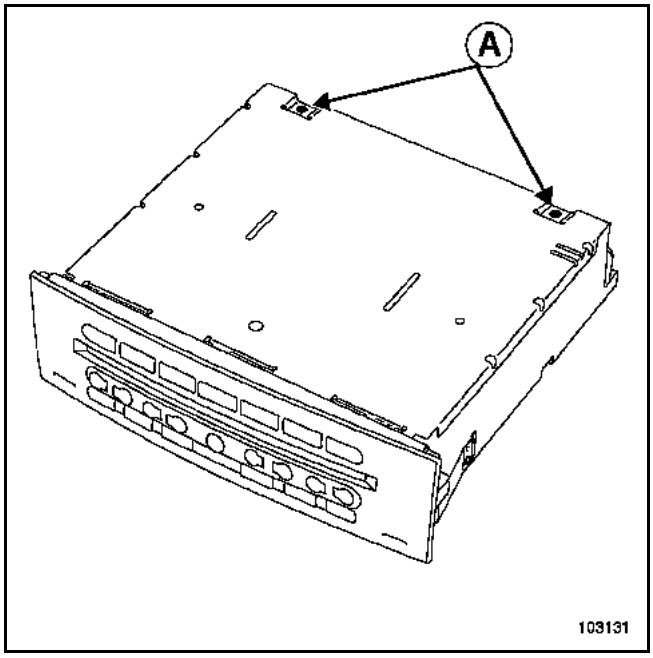

Turn the CD changer upside down.
Remove the 6 bolts (B).

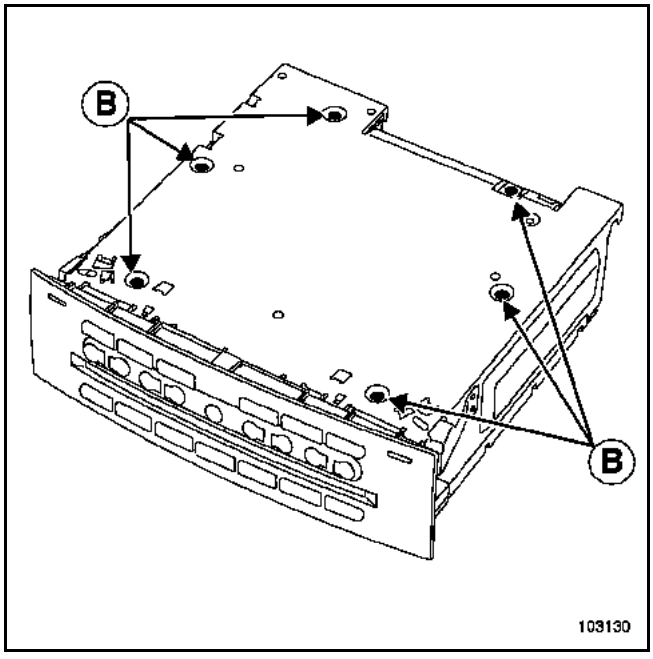

Turn the CD changer upside down.
Remove the cover.

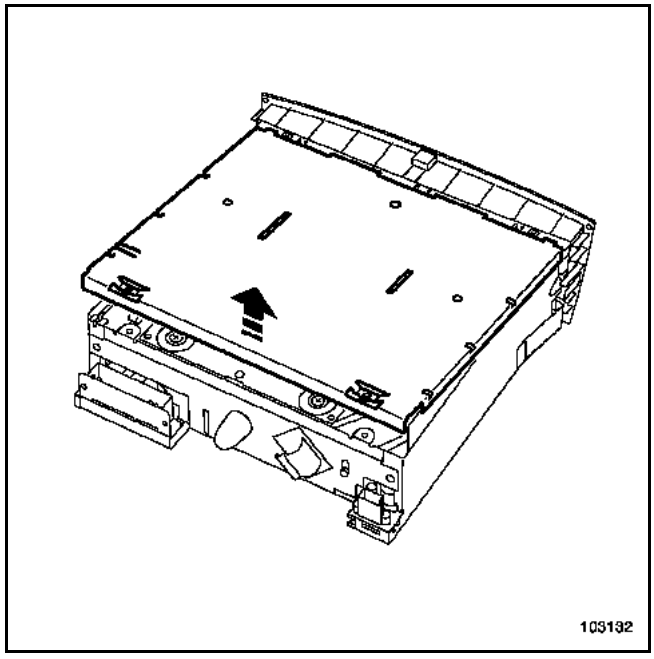

Remove the mechanism from its housing.

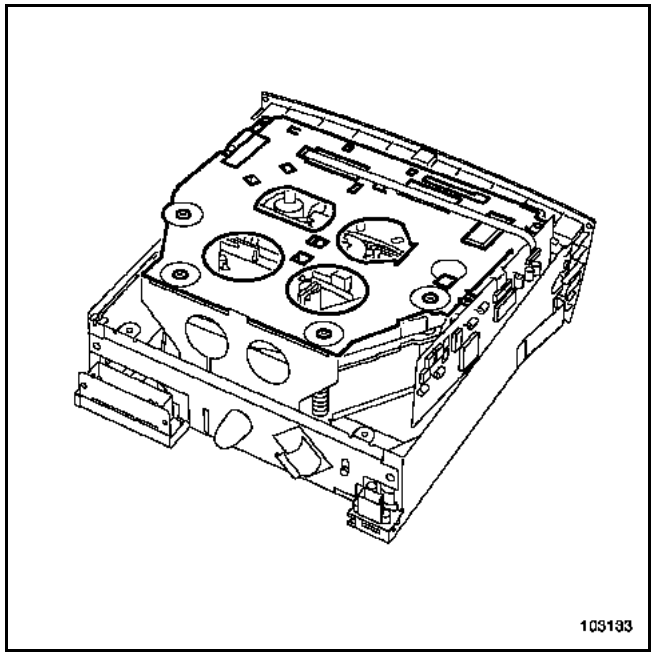

CHANGER IN THE DASHBOARD

Remove the two bolts (C).

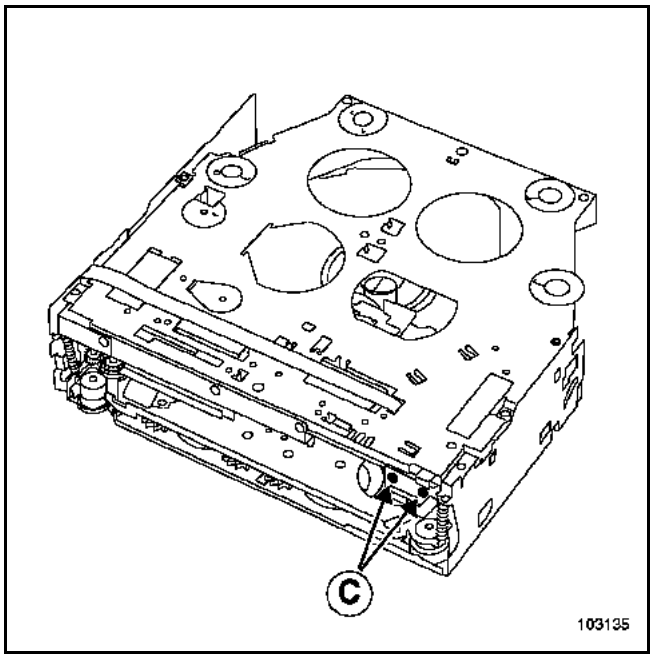

Remove the CD guide arm.
Disconnect connector (D).

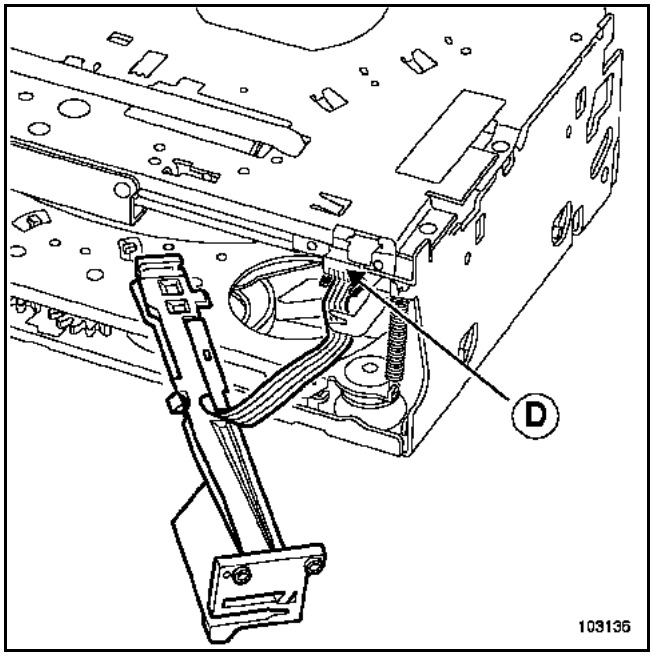

Remove the eight bolts (E).

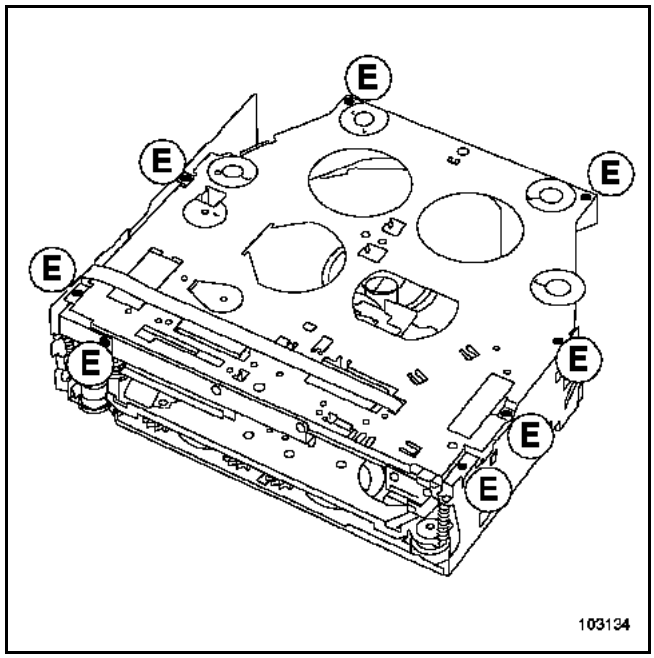

Remove both clips from the two connectors.

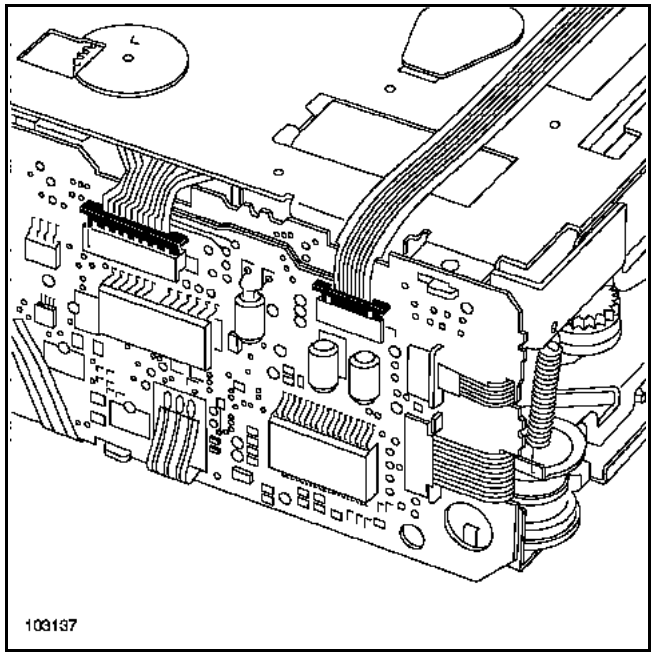

CHANGER IN THE DASHBOARD

Remove both ribbon cables.

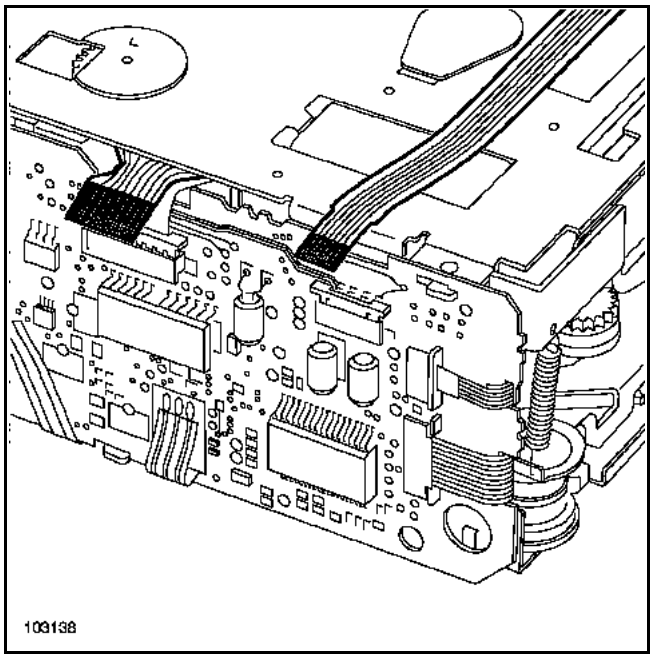

Remove the upper section of mechanism.

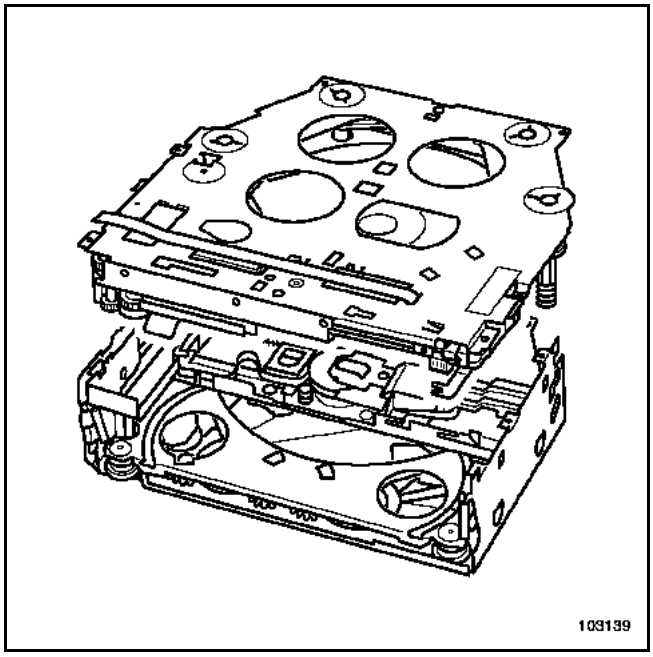

Turn the guides and push the mechanism as shown in the diagram in order to raise or lower the CDs.

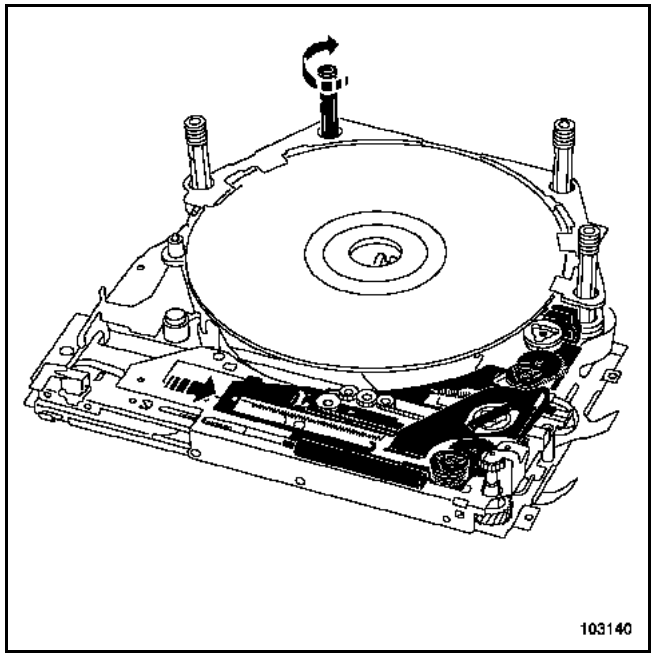

The CDs can now be accessed.

NOTE
Never refit the changer mechanism once it has been removed.

CHANGER IN THE BOOT

Remove:
– the three bolts (1) located underneath the unit,

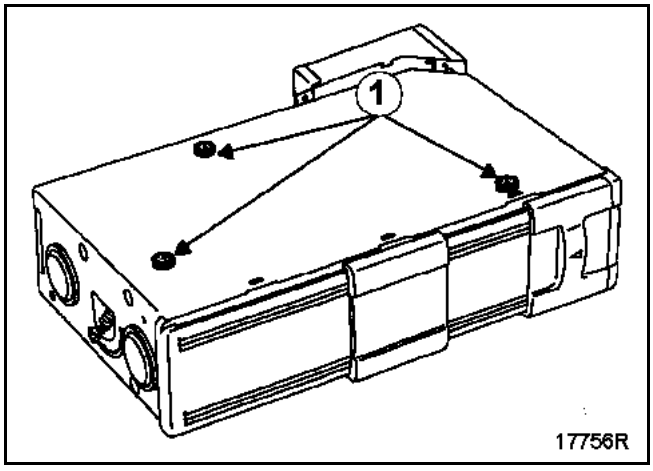

– the two springs (2) after bringing them to the upper position,

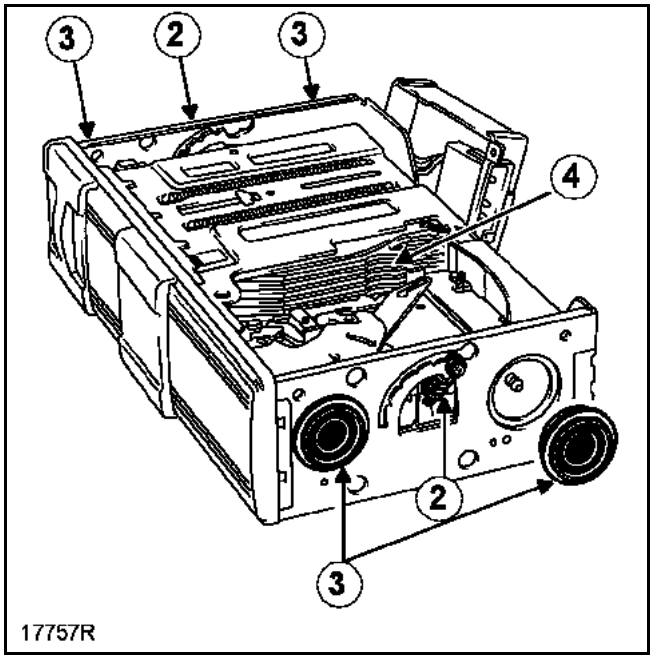

– the four dampers (3) (clipped on).

Remove the electronic module from the mounting and place it to the side.

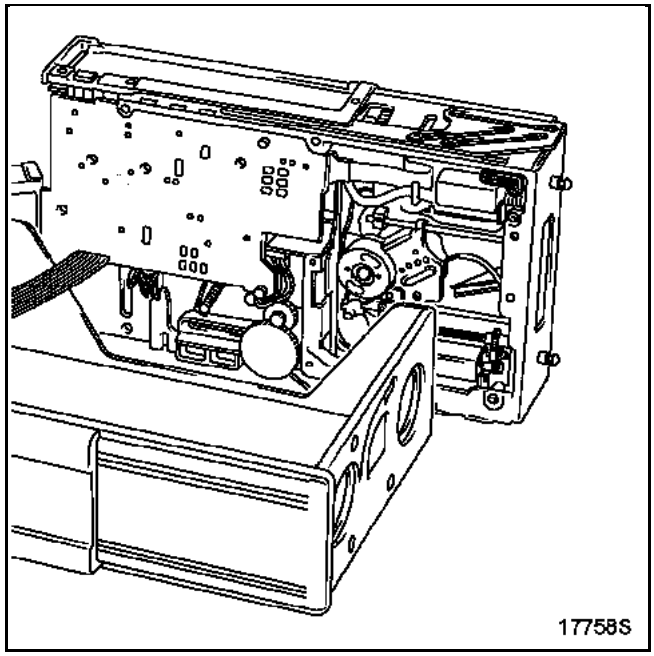

First solution

If the electric motors are operating:

1 Reinsert the CD and its drawer into the changer (4) using a 4.5 V battery to supply the electric motor (3), (attach the + wire to contact (1) and the - wire to contact (2)).
2 Eject the changer by moving lever (4).

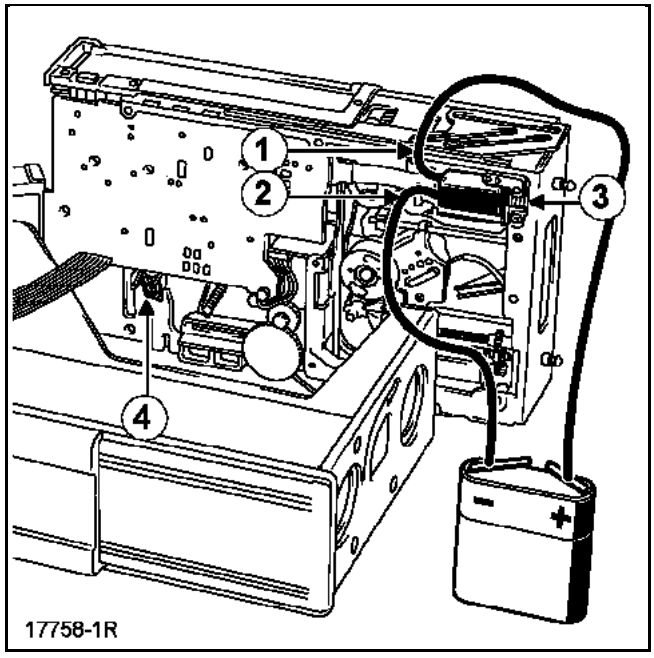

CHANGER IN THE BOOT

Second solution

If the electric motors are not operational:

1 To reinsert the CD and its drawer into changer (5), remove the pinion mounting (6) by its bolt,

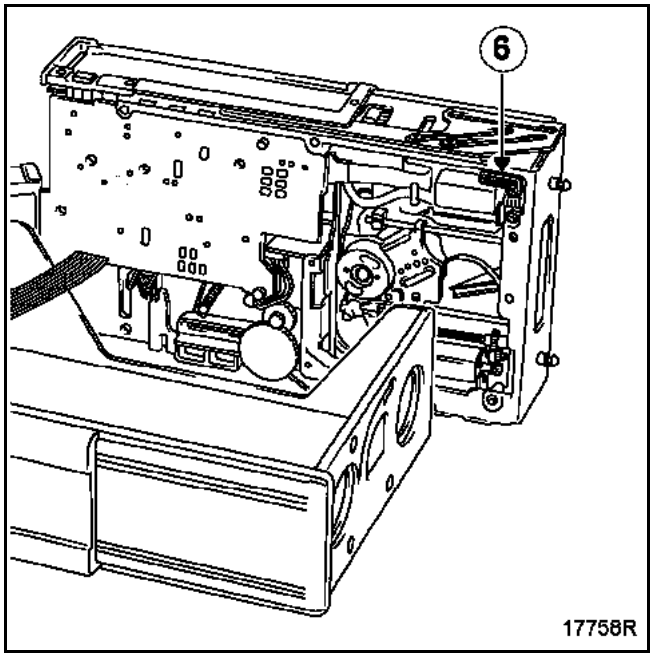

turn the toothed wheel (7) by hand in an anticlockwise direction until the drawer is turned completely upside down in the changer (5).

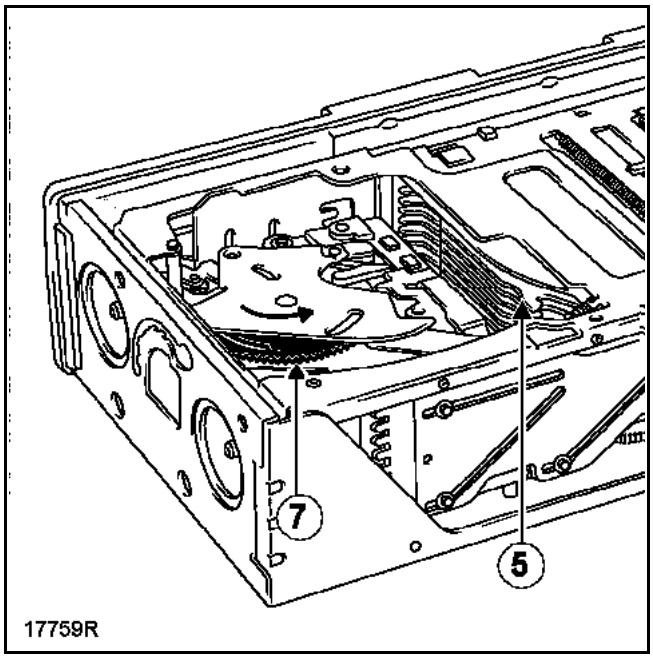

2 Eject the CD changer by moving the lever (8).

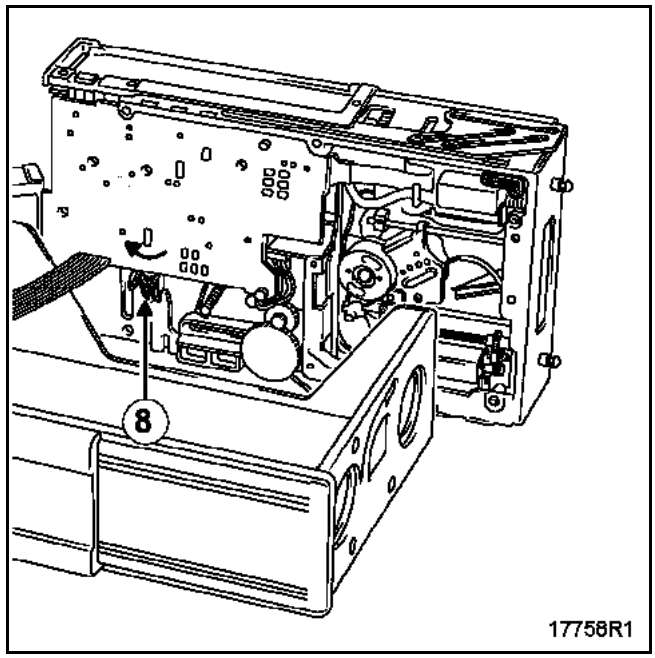

Before replacing the radio:

- refit the module in its unit, replace the four dampers and the two springs,
- attach the module to the unit using the three bolts,
- re-close the changer, attach its cover and refit the rear section.

RENAULT

Technical Note 3707A

Vehicle	*Type*
Twingo	X06X
Kangoo	XCXX
Clio II	XBXX
Logan	LS0X
Modus	XP0X
Mégane	XAXX
Mégane II	XM0X
Scénic	JAXX
Scenic II	JMXX
Laguna II	XGXX
Vel Satis	XJXX
Espace	JEXX
Espace IV	XKXX
Avantime	DE0X
Trafic II	XLXX
Master II	XDXX - XHXX

AIRBAGS AND PRETENSIONERS
Summary of Systems and Documentation

77 11 319 742 Edition 2 - OCTOBER 2004 EDITION ANGLAISE

"The repair procedures given by the Manufacturer in this document are based on the technical specifications current when it was prepared.

The procedures may be modified as a result of changes introduced by the manufacturer in the production of the various component units and accessories from which their vehicles are constructed."

All copyrights reserved by RENAULT.

Copying or translating, in part or in full, of this document or use of the service part reference numbering system is prohibited without the prior written authority of RENAULT.

© Renault s.a.s. 2004

AIRBAGS AND PRETENSIONERS
Summary Equipment Chart

This Technical Note contains:

- a summary of the airbag and pretensioner systems.

For system fault finding, use the diagnostic procedures.

These tables only cover the parts that absolutely must be replaced to ensure the safety of occupants in the event of a collision. For fittings, see the **BODYWORK** manuals.

Twingo

Component	Equipment	Frontal impact	Side impact	**Compulsory** replacement for the safety of the occupants
Buckle pretensioners (driver and passenger)	Standard	yes	no	– **seatbelt** (if it was fastened), – **airbag computer**
Driver's frontal airbag	Standard	yes	no	– steering **wheel** – mounting **bolts**
Passenger frontal airbag	Standard	yes(1)	no	-
Front head/chest airbag	Option	no	yes (impact side)	– **seat frame** – **airbag computer**

(1) unless inhibited by the switch (if the vehicle is fitted with one)

Kangoo

Component	Equipment	Frontal impact			Side impact	**Must be replaced for the safety of the occupants**
		Level				
		1	2	3		
Buckle pretensioners (driver and passenger)	Standard	X	X	X	No	– the airbag computer. – the front seat belts (if they were fastened at the moment of impact). – the seat frame (if the seat was occupied), – the seat belt buckle (if the seat belt was fastened).
Lap belt pretensioners (driver and passenger)	No	-	-	X	No	-
Driver's frontal airbag	Standard	-	X	X	No	– the steering wheel and its mounting bolt.
Passenger frontal airbag	Standard	-	X(1)	X(1)	No	– the dashboard
Chest airbags (driver and passenger)	Standard	No			Yes (impact side)(1)	– the airbag computer. – the seat frame. – the side impact sensor.
Curtain airbag	No	No			-	-
ISOFIX seat	accessories	Yes			Yes	– the ISOFIX seat (if the seat was occupied). – the front or rear seat frame.

(1) unless inhibited by the switch

Clio II (XBXX)

Component	Equipment	Frontal impact Level 1	Frontal impact Level 2	Side impact	**Compulsory** replacement for the safety of the occupants
Buckle pretensioners (driver and passenger)	Standard	X	X	yes (impact side)(3)	– **seatbelt** (if it was fastened), – **airbag computer**(1)
Rear pyrotechnic inertia reel	Option(3)	X	X	yes (impact side)	-
Driver's frontal airbag	Standard		X	no	– steering **wheel** – mounting **bolt**
Passenger frontal airbag	Standard		X(2)	no	– **Dashboard** – **cross member**
Front head/chest airbag	Option	no		yes (impact side)(2)	– **seat frame** – **airbag computer**(1) and its **side sensors**(4)

(1) the AB7 computers can be reused (no more than three instances of airbag activation)
(2) unless inhibited by the switch (if the vehicle is fitted with one)
(3) starting with the AB8 airbag computer
(4) the pretensioners are autonomous with the AB7 airbag computer. Starting with the AB8 airbag computer, the side airbags are controlled by the electronics unit (no more than four instances of activation)

Modus

Component	Equipment	Frontal impact Level 1	Frontal impact Level 2	Frontal impact Level 3	Side impact	**Compulsory** replacement for the safety of the occupants
Pyrotechnic inertia reel (driver and passenger)	Standard	X	X	X	No	– the airbag computer – the front seat belts (front pyrotechnic inertia reels connected in series) – the seat frame (if the seat was occupied) – the seat belt buckle (if the seat belt was fastened) – the height adjuster of the occupied seat
Rear pyrotechnic inertia reel (side seats)	Standard(2)	-	X	X	No	– the rear seat belts (Rear pyrotechnic inertia reels connected in series) Seat frame check (if the seat was occupied or if there was luggage in the boot) – the seat belt buckle (if the seat belt was fastened)
Rear inertia reel (middle seat)	Standard(2)		X	X	No	– the seat belt (rear centre inertia reel) – the seat belt guide attached to the quarter panel lining – the seat belt buckle (if the seat was occupied with the seat belt fastened) Seat frame check (if the seat was occupied or if there was luggage in the boot)
Lap belt pretensioner (driver and passenger)	Standard	-	-	X	No	– the driver's side lap-belt pretensioner – the passenger side lap-belt pretensioner (Except when the passenger airbag is inhibited)
Driver's frontal airbag	Standard	-	X	X	No	– the steering wheel and its mounting bolt – the steering column – the retractable brake pedal
Passenger frontal airbag	Standard	-	X(1)	X(1)	No	– the dashboard – the dashboard cross member
Front chest airbags (driver and passenger)	Standard	No			Yes (impact side)(1)	– the airbag computer – the seat frame – the side impact sensor
Curtain airbag	Standard	No			Yes (impact side)	– the airbag computer – the deflector
ISOFIX seat	accessories	Yes			Yes	– ISOFIX seat (if the seat was occupied) – the front or rear seat frame

(1) unless inhibited by the switch
(2) except utility version

Logan

Component	Equipment	Frontal impact	Side impact	**Compulsory** replacement for the safety of the occupants
Driver's frontal airbag	Standard	yes	no	– steering wheel – mounting bolt – airbag module mounting bolts
Passenger frontal airbag	Standard	yes(1)	no	– dashboard – airbag module mounting bolts

(1) unless inhibited by the switch.

Mégane and Scénic (XAXX)

Component	Equipment	Frontal impact	Side impact	**Compulsory** replacement for the safety of the occupants
Buckle pretensioners (driver and passenger)	Standard	yes	no	– **seatbelt** (if it was fastened), – **airbag computer**
Rear pyrotechnic inertia reel	Standard(1)	yes	no	-
Driver's frontal airbag	Standard	yes	no	– steering **wheel** – mounting **bolt**
Passenger frontal airbag	Standard	yes	no	-
Front head/chest (Mégane) or chest (Scénic) airbag	Option	no	yes	– **seat frame** – **airbag computer** and its **side sensors**
Curtain airbags	Standard(2)	no	yes	– fit the repair **plate**

(1) starting with the ACU.3 airbag computer.
(2) in the Scénic model starting with the ACU.3 computer.

Mégane II (XM0X)

Component	Equipment	Frontal impact level 1	Frontal impact level 2	Frontal impact level 3	Side impact	**Compulsory** replacement for the safety of the occupants
Buckle pretensioners (driver and passenger)	Standard	X	X	X	no	– **airbag computer** and its **protector**, – **seatbelt** (if it was fastened), – **seat frame** (if the seat was occupied), – **buckle pretensioners** (driver and passenger) are connected in series and must always be replaced in pairs if triggered
Rear pyrotechnic inertia reel (side seats)	Standard(2)		X	X	no	– **pyrotechnic inertia reels** They are connected in series and must always be replaced in pairs if triggered
Driver's frontal airbag	Standard		X	X	no	– steering **wheel** – mounting **bolt**
Passenger frontal airbag	Standard		X(1)	X(1)		– **dashboard**
Lap belt pretensioner (driver and passenger)	Standard (5-door version only)			X(1)	no	-
Anti-submarining airbag in the seat cushion (driver and passenger)	Standard (3-door version only)			X(1)	no	– **seat frame**
Front chest airbags (driver and passenger)	Standard	no			yes impact side(1)	– **seat frame** – **airbag computer** and its **protector**,
Rear chest airbags	Option	no			yes impact side	-
Curtain airbags	Standard	no			yes impact side	– fit the repair **plate** – **airbag deflector**

(1) unless inhibited by the switch
(2) except utility version

Scénic II

Component	Equipment	Frontal impact level			Side impact	**Compulsory** replacement for the safety of the occupants
		1	2	3		
Buckle pretensioners (driver and passenger)	Standard	X	X	X	No	Airbag computer and its protector. Seat belt (if it was fastened). Seat frame (if the seat was occupied). The buckle pretensioners (driver and passenger) are connected in series and must always be replaced in pairs if triggered.
Rear pyrotechnic inertia reel (side seats)	Standard	-	X(2)	X(2)	No	The pyrotechnic inertia reels are connected in series and must always be replaced in pairs if triggered.
Driver's frontal airbag	Standard	-	X	X	No	Steering wheel Mounting bolt
Passenger frontal airbag	Standard	-	X(1)	X(1)	No	Dashboard
Lap belt pretensioner (driver and passenger)	Standard	-	-	X	No	-
Rear frontal airbag	Option	-	X	X	No	-
Front chest airbags (driver and passenger)	Standard	No			Yes impact side(1)	Seat frame. Airbag computer and its protector.
Rear chest airbags	No	-			-	-
Curtain airbags	Standard	No			Yes impact side	Airbag deflector Fit the repair plate

(1) unless inhibited by the switch

Laguna II (XG0X)

Component	Equipment	Frontal impact level		Side impact	**Compulsory** replacement for the safety of the occupants
		1	2		
Buckle pretensioners (driver and passenger)	Standard	X	X	yes (depending on impact)	– **seatbelt** (if it was fastened), – **seat frame** (if the seat was occupied), – **airbag computer**
Rear pyrotechnic inertia reel	Standard	X	X	yes (depending on impact)	-
Driver's lap belt pretensioner	Standard		X	no	-
Driver's frontal airbag	Standard		X	no	– steering **wheel** – mounting **bolt**
Passenger frontal airbag	Standard		X(1)	no	– **dashboard** – **cross member**
Front chest airbags	Standard	no		yes	– **seat frame** – **airbag computer**
Curtain airbags	Standard	no		yes	-
Rear chest airbags	Option	no		yes	-

(1) unless inhibited by the switch (if the vehicle is fitted with one)

Vel Satis

Component	Equipment	Frontal impact level		Side impact	**Compulsory** replacement for the safety of the occupants
		1	2		
Buckle pretensioners (driver and passenger)	Standard	X	X	yes (depending on impact)	– **seatbelt** (if it was fastened), – **seat frame** (if the seat was occupied), – **airbag computer**
Rear pyrotechnic inertia reel	Standard	X	X	yes (depending on impact)	– **rapid seatbelt connection**
Driver's lap belt pretensioner	Standard		X	no	-
Passenger's lap belt pretensioner	Standard(2)		X(1)	no	-
Driver's frontal airbag	Standard		X	no	– steering **wheel** – mounting **bolt**
Passenger frontal airbag	Standard		X(1)	no	– **dashboard** – **cross member**
Front chest airbags	Standard	no		yes (impact side)	– **seat frame** – **airbag computer**
Curtain airbags	Standard	no		yes (impact side)	-
Rear chest airbags	Option	no		yes (impact side)	-

(1) unless inhibited by the switch (if the vehicle is fitted with one)
(2) depending on production date

Espace (JE0X)

Component	Equipment	Frontal impact	Side impact	**Compulsory** replacement for the safety of the occupants
Buckle pretensioners (driver and passenger)	Standard	yes	-	– **seatbelt** (if it was fastened), – **seat frame** (if the seat was occupied), – **airbag computer**
Rear pyrotechnic inertia reel	No	-	-	-
Lap belt pretensioner	No	-	-	-
Driver's frontal airbag	Standard	yes	-	– steering **wheel** – mounting **bolt**
Passenger frontal airbag	Standard	yes	-	– **dashboard** (partial replacement)
Front chest airbags	Standard	-	yes (impact side)	– **seat frame**, – **airbag computer**
Curtain airbags	No	-	-	-
Rear chest airbags	No	-	-	-

Espace IV (JKXX)

Component	Equipment	Frontal impact level		Side impact	**Compulsory** replacement for the safety of the occupants
		1	2		
Buckle pretensioners (driver and passenger)	Standard	X	X	no	– **seatbelt** (if it was fastened), – **seat frame** (if the seat was occupied), – **airbag computer**
Rear pyrotechnic inertia reel	No	-	-	-	-
Lap belt pretensioner (driver and passenger)	Standard		X(1)	no	-
Driver's frontal airbag	Standard		X	no	– steering **wheel** – mounting **bolt**
Passenger frontal airbag	Standard		X(1)	no	– **dashboard** (partial replacement)
Front chest airbags	Standard	no		yes (impact side)(1)	– **seat frame** – **airbag computer**
Curtain airbags (long or short)	Standard	no		yes (impact side)	-
Rear chest airbags (in the rear door)	Option	no		yes (impact side)	-

(1) unless inhibited by the switch

Avantime

Component	Equipment	Frontal impact	Side impact	**Compulsory** replacement for the safety of the occupants
Buckle pretensioners (driver and passenger)	Standard	yes	yes (impact side)	– **seat frame** (if it was occupied), – **airbag computer**
Front pyrotechnic inertia reel (driver and passenger)	Standard	yes	yes (impact side)	– **seat** if occupied
Rear pyrotechnic inertia reel	No	-	-	-
Driver's frontal airbag	Standard	yes	no	– **steering wheel** and mounting **bolt**,
Passenger frontal airbag	Standard	yes	no	– **dashboard** (partial replacement)
Front chest airbags	Standard	-	yes (impact side)	– **seat frame** – **airbag computer**
Curtain airbags	Standard	-	yes (impact side)	-
Rear chest airbags	No	-	-	-

Trafic II

Component	Equipment	Frontal impact level			Side impact	**Compulsory** replacement for the safety of the occupants
		1	2	3		
Front buckle pretensioners (driver and front passenger) (1)	Standard	X	X	X	No	– the airbag computer – the front seat belts (if they were fastened). – the pretensioners (driver and front passenger).
First and second row rear inertia reel (side position).	Standard	-	X	X	No	– the rear pyrotechnic inertia reels (if seat belt was fastened). – the seat belt buckles (if the seats were occupied with the seat belts fastened). Seat frame check (if the seats were occupied).
Front chest airbags (driver and passenger)*	Option	-	X	X	Yes (side of the impact)	– the front seat frame – the side impact sensor
Driver's frontal airbag	Standard	-	X	X	No	– the steering wheel and its mounting bolt Check the geometry of the pedals and free movement of the brake pedal.
Passenger frontal airbag	Option (Standard on Bus version)	-	X	X	No	– the module and its cover Check the condition of the dashboard.
Front and rear curtain airbag	Option	No			Yes (side of the impact)	Replacement of airbags on side of the impact, including their mountings and mounting bolts. Side impact sensor. Fit the repair plate.

(1) The vehicle may have a front passenger seat (one pretensioner) or bench seat (two pretensioners) installed

* - Chest airbags in the front seats only available on front passenger seat version; not available on bench seat version.
- Chest airbags in the front seats refer to driver and passenger frontal airbags.

Master II (XDXX/XHXX)

Component	Equipment	Frontal impact	Side impact	**Compulsory** replacement for the safety of the occupants
Buckle pretensioners (driver and passenger[1])	Standard	yes	no	– **seatbelt** (if it was fastened), – **airbag computer**
Driver's frontal airbag	Standard	yes	no	– steering **wheel** – mounting **bolt**
Passenger frontal airbag	Option	yes	no	-

(1) The vehicle may have a front passenger seat (one pretensioner) or bench seat (two pretensioners) installed

RENAULT

Technical Note 3761A

XXXX

Using the VIDEO ENDOSCOPE for mechanical, bodywork & electrical repairs

77 11 322 682 JUNE 2003 EDITION ANGLAISE

"The repair methods given by the manufacturer in this document are based on the technical specifications current when it was prepared.

The methods may be modified as a result of changes introduced by the manufacturer in the production of the various component units and accessories from which his vehicles are constructed."

All copyrights reserved by RENAULT.

Copying or translating, in part or in full, of this document or use of the service part reference numbering system is forbidden without the prior written authorisation of RENAULT.

© RENAULT 2003

CONTENTS

I - RECAP SHEET 1

II - INTRODUCTION 2

III - APPARATUS PRESENTATION AND OPERATION 3

1 - Equipment description 3

2 - Installing and using the "USB Vidéo Génie" software: 4

A - General 4

B - Taking photos 6

C - Shooting video sequences 7

IV - EXAMPLES OF BODYWORK APPLICATIONS 8

1 - Checking rust spots 8

2 - Reading labels 8

3 - Checking bodywork faults 8

V - EXAMPLES OF MECHANICAL APPLICATIONS 9

1 - Checking mechanical parts 9

2 - Checking the internal cylinder head (pistons, valve guides, etc.) 9

3 - Checking liquid leaks 9

4 - Checking the air conditioning flow control 9

VI - EXAMPLES OF ELECTRICAL APPLICATIONS 10

1 - Checking cables 10

2 - Checking the connections 10

3 - Searching for a parasitic electrical consumer 10

VII - MISCELLANEOUS APPLICATIONS 11

I - RECAP SHEET

This page recaps all the endoscope display software icons, for ease of use. You can print or photocopy it for displaying near the endoscope.

Photos	Video
Switch to photo mode	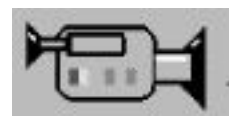 **Switch to video mode**
Take photo	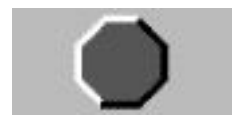 **Start or resume recording**
	Pause recording or playback
	Stop recording
	Playback last recording or view selected image

General

Return to main screen

Delete selected image or film

Switch to full-screen mode

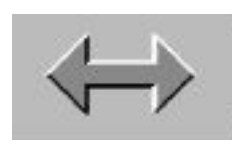
Reverse image

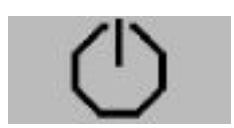
Exit application

II - INTRODUCTION

This document presents the operation, handling and applications of a Sagem video endoscope. This apparatus is a camera with a long thin lens that can provide a video image of normally invisible components or parts, that are located in very dark or hard-to-access places.
You can use the endoscope to record video or photographic sequences.
It can be connected to a CLIP fault finding tool PC, which means the fault finding tool and video device can be used at the same time.

The explanations and remarks in this document apply to all vehicles in the RENAULT range.
Before carrying out any work, turn the engine off and leave it to cool down to prevent the device's cables becoming entangled in moving components (such as a belt) or suffering heat damage from certain components.
Check the battery charge is correct, as the device is connected to it.

III - APPARATUS PRESENTATION & OPERATION

1 - Equipment description

The device comprises four components:

- A camera, itself comprising an image sensor (CCD), flexible lead and the image processing electronics.
- A self lighting lens that sends the image to the CCD sensor. This comprises a simple lens (for **axial view**), or a 90° or 120° prism for **lateral view**.
- A monitor.
- An interface unit that manages the device power supply and its computer connection (USB).

These four components are connected by cables and supplied by the battery.

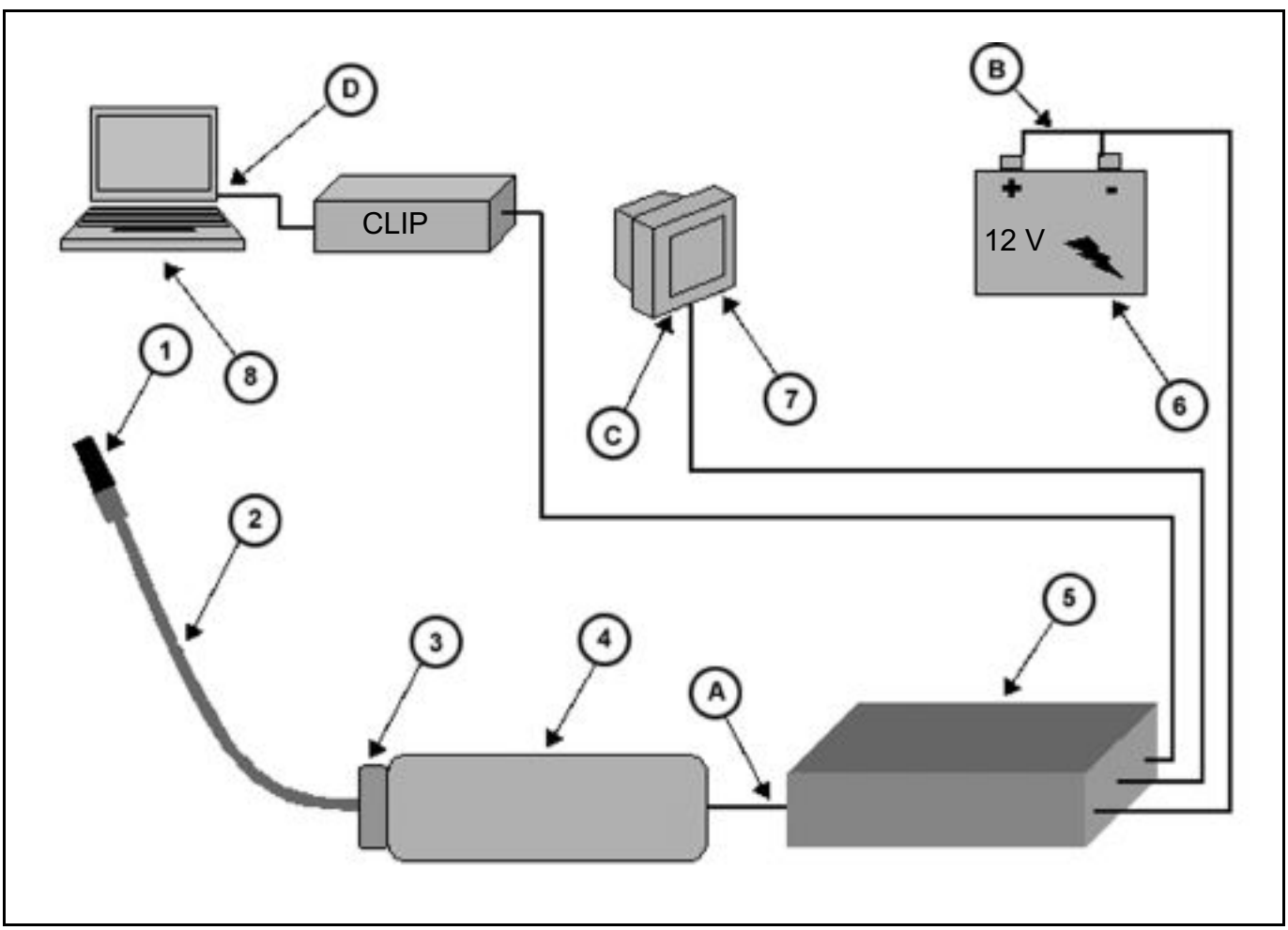

1. Lens	4. Electronics casing	7. Monitor
2. Flexible lead	5. Interface box	8. PC / Clip
3. Focusing ring	6. Vehicle battery	

Connections: *A. **DB9** (Serial port).* *B. **12V Clamps**.*
*C. "**Mini-din**" video signal and "**domino**" power supply.* *D. USB **connector**.*

2 - Installing and using the display software:

*Foreword: The endoscope can only be used with the black & white monitor if you do not wish **to record** images on the computer.*

A - General

Installing the display software:
- Installation runs automatically when the installation CD-Rom is inserted.
- The software will be installed to the directory C:\program files\endoscope.
- You can install it on computers running on Windows 98, Windows 98 Se, Windows 2000 and Windows XP.

Using the endoscope and the software:
- Connect the monitor, the endoscope and the interface box as shown in the diagram in the "equipment description" section.
- Connect the apparatus to the 12V vehicle battery with the 12V clamps (see diagram in the "equipment description" section).
- Insert the lens into the camera slots, and screw in (without forcing it) one of the three available view sockets: axial shot (grey ring), radial shot (red ring), or 120° rear shot (blue ring).
  Comment: An extra lamp makes for easy viewing.
- Connect the USB cable directly to the PC or to the upper Clip connector.
- Run the program from the start menu as follows: Start Menu / Program / Endoscope.

- **The program displays a window with the image sent by the camera in real time, plus five icons:**

Fixed image capture icon:

Click this icon to switch to the fixed image capture screen.

Animated sequence capture icon:

Click this icon to switch to the animated sequence capture screen.

Image reading icon:

Click this icon to select stored images and to view them.

For information, these images are stored in the file endoscope/capture

- a fixed image is named with the recording date and time, in **bmp** format: YYMMDD_hhmmss.bmp
- A film is named with the recording date and time, in **avi** format: YYMMDD_hhmmss.avi

Example: a file named **030406_220015.avi** is a **film** that was recorded on **06 April 2003** at **22** hours **00** minutes and **15** seconds.

To view a shot from the display screen, simply select the image corresponding to the desired photo or film from the slides.

The pictogram above the view window indicates whether the image selected corresponds to a film (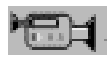) or to a photo ( ).

Select the image and start reading by clicking the read icon if it is a video, or delete it by clicking the "recycle bin" icon.

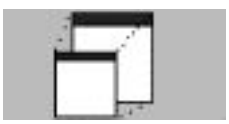

Zoom icon:

To view the image in large image mode.

Mirror icon:

To reverse the displayed image.

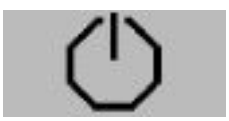

Stop icon:

To exit the application.

B - taking photos

To go from the main screen to photo mode, click:

A new window will appear with:

- A live image display zone.
- A view counter.
- A slides zone for selecting a photo.
- 3 icons:

Take photo icon:

Adds a new photo to the slides. Each time you click this icon, a new image is added to the end of the slides. The last image captured is displayed in the last position in the slides zone, and on the screen.

The images will be automatically stored in the directory "endoscope/capture", within program's allocated disc space.

Recycle bin icon:

Deletes the image or film selected from the slides.

Exit icon:

To return to the main screen.

B - shooting video sequences

To go from the main screen to video mode, click: 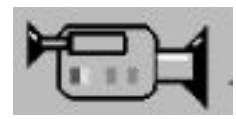

A new window will appear with:

- A real time display zone.
- A view counter.
- A slides zone for selecting a film.
- A progress bar, indicating the image percentage viewed or recorded out of the total captured sequence.
- 6 icons:

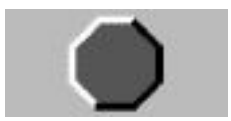

Record icon:

Starts (or restarts if paused) the video recording.

The first image of the last recording is displayed at the bottom of the slides zone.

Pause icon:

Momentarily stops the sequence recording. The icon resumes the same recording.

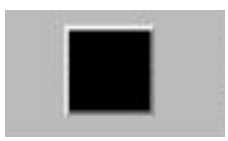

Stop icon:

Fully stops the sequence recording. The icon starts a new sequence recording.

Image reading icon:

Reads only the last recorded video sequence. The progress bar indicates the image percentage viewed out of the total sequence.

Recycle bin icon:

Deletes the image or film selected from the slides. There are two scroll arrows to the right of the slides.

Exit icon:

To return to the main screen.

IV - EXAMPLES OF BODYWORK APPLICATIONS

The following five cases are given by way of example. There are of course many other possible applications of the endoscope.

1 - Checking rust spots

The endoscope enables you to make visual inspections of hard-to-access places, and enables you to find rust spots without mounting the vehicle on a lift or removing a wheel or other component. The light emitted from the end of the lens provides good lighting of the spot in view, which gives you a good image.

2 - Reading labels

The endoscope enables you to read labels "hidden" behind various parts or not discernible to the naked eye. For quick and easy reading.

3 - Checking bodywork faults

The endoscope enables you to access for example the interior of a door, or the tailgate, etc. once the interior trim has been removed, to inspect any bodywork faults.

4 - Detecting water seepage

The endoscope enables you to detect, for example, water seepage through the windscreen behind the dashboard.

5 - Inspecting hollow sections and side members (for corrosion or deformation)

The endoscope also enables you to inspect various hollow section or side member components that are susceptible to corrosion or deformation/cracking caused by an impact on the bodywork.

V - EXAMPLES OF MECHANICAL APPLICATIONS

The following six cases are given by way of example. There are of course many other possible applications of the endoscope.

1 - Checking mechanical parts

The endoscope enables you to detect any fractures, cracking and other gaps in various mechanical components. As an example, if you are looking for gaps in a steering column caused by a faulty universal block: examining the universal block with the endoscope will enable you to pinpoint this fault more quickly, by avoiding the need to remove parts.

2 - Checking the internal cylinder head and the cylinder barrel (except diesel): piston tops, valves, scoring, etc.

By feeding the endoscope through a spark plug hole you can detect signs of seizing or to observe the condition of the valves and the piston, after a broken timing belt for example.

3 - Checking for liquid leaks

The endoscope enables you to find oil, coolant, or air conditioning liquid leaks without putting the car on a lift.

Example: The endoscope avoids the need to remove and refit to detect an air conditioning or cooling radiator leak.

4 - Checking the catalytic converter

The endoscope enables you, once the catalytic converter has been removed, to check the internal ceramic material.

5 - Checking the pads

The endoscope enables you to check the pads without removing the wheels.

6 - Clutch slave cylinder

If the part is inside the clutch housing, the endoscope enables you to detect a clutch slave cylinder leak.

VI - EXAMPLES OF ELECTRICAL APPLICATIONS

The following two cases are given by way of example. There are other possible applications of the endoscope.

1 - Checking cables

The endoscope enables you to check cables that are inaccessible without removing parts (under the instrument panel, engine cables, etc.). This enables you to see whether the cables are correctly routed (e.g. air bag wiring under the seat), or to detect damage such as bare or split wires.

2 - Checking the connections

The endoscope enables you to check that certain connectors are correctly inserted.

VII - MISCELLANEOUS APPLICATIONS

The following case is given by way of example. There are other possible applications of the endoscope.

Miscellaneous applications

The endoscope enables you to look for objects (coins, lighters) that have fallen behind the dashboard or centre console, or even into the hollow section (side members, suspension arms).

RENAULT

Technical Note 3786A

DXX, and D4D or D4F or D7D or D7F - FXX, and F4P or F4R or F5R or F8Q or F9Q - GXX, and G9T or G9U - KXX, and K4J or K4M or K7J or K7M or K9K - LXX, and L7X - PXX, and P9X - SXX, and S8W or S9W - VXX, and V4Y - ZXX, and ZD3

D, F, G, K, L, P, S, V, ZD3 engine belt tensions

Sub-sections concerned: 10A - 11A - 16A - 62A - 62B - 62C

Presentation of the new belt tension measuring tool Mot. 1715.

Procedures for using belt tension measuring tools Mot. 1505 and Mot. 1715.

Recommendations for fitting the timing and accessories belts.

Tension values (frequency in Hertz)

Refer to Technical Note 3787A for the tension values of other engines.

77 11 327 282 **OCTOBER 2003** **Edition Anglaise**

"The repair methods given by the manufacturer in this document are based on the technical specifications current when it was prepared.

The methods may be modified as a result of changes introduced by the manufacturer in the production of the various component units and accessories from which his vehicles are constructed."

All copyrights reserved by Renault.

The reproduction or translation in part of whole of the present document, as well as the use of the spare parts reference numbering system, are prohibited without the prior written consent of Renault.

© Renault 2003

This note cancels and replaces Technical Notes 3247A and 3360A

77 11 327 282 **OCTOBER 2003** **Edition Anglaise**

"The repair methods given by the manufacturer in this document are based on the technical specifications current when it was prepared.

The methods may be modified as a result of changes introduced by the manufacturer in the production of the various component units and accessories from which his vehicles are constructed."

All copyrights reserved by Renault.

The reproduction or translation in part of whole of the present document, as well as the use of the spare parts reference numbering system, are prohibited without the prior written consent of Renault.

© Renault 2003

D, F, G, K, L, P, S, V, ZD3 engine belt tensions

Contents

10A ENGINE AND LOWER ENGINE ASSEMBLY

Belt tension tester:Use	10A-1
Timing belt: Assembly instructions	10A-8
Timing belts: Tension values	10A-10
Accessories belt: Assembly instructions	10A-19
Accessories belt: Tension values	10A-20

Belt tension tester:Use

DXX – KXX – FXX – GXX – SXX – PXX – VXX – ZXX – LXX

Essential special tooling		
Mot. 1505	FXX – DXX – GXX – KXX – LXX – PXX – SXX – VXX – ZXX	Belt tension setting tool (frequency meter)
Mot. 1715	FXX – DXX – GXX – KXX – LXX – PXX – SXX – VXX – ZXX	Belt tension setting tool (frequency meter)

- The belt tensioning process is an important operation, as it determines the belt's service life.
- Using the frequency meter: tool (Mot. 1505) or (Mot. 1715) is essential for applying a fitting tension compliant with the manufacturer's recommendations.
- This process eliminates risks of overtension (or undertension), noise phenomena and any problem caused by incorrect belt tension.
- Failure to strictly apply the tensioning process with tool (Mot. 1505) or (Mot. 1715) may destroy the engine.

DXX – KXX – FXX – GXX – SXX – PXX – VXX – ZXX – LXX

I -OPERATION OF TOOL MOT.1505

1 - Description

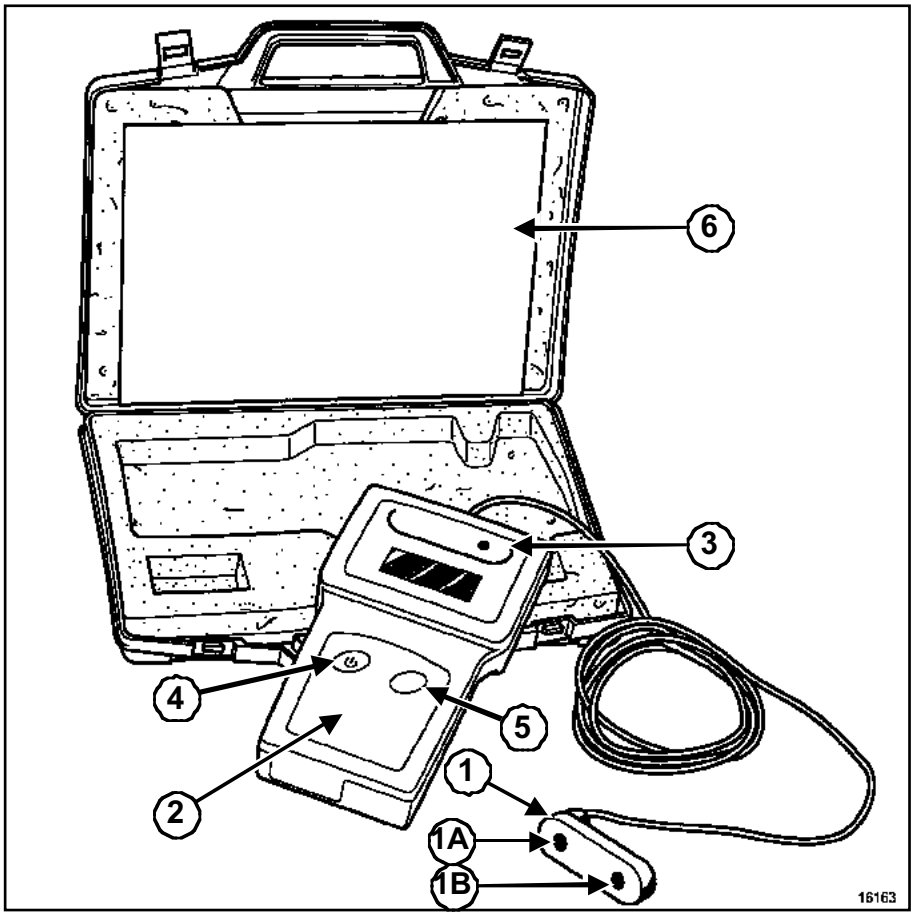

16163

(**1**) Reading head with two sensors (**1A**) and (**1B**)

(**2**) Display unit

(**3**) Calibration frequency generator (**512 ± 1Hz**) built into display unit

(**4**) Device on/off switch

(**5**) Test button to check the device is correctly calibrated

(**6**) Device user manual

2 - Tool check

The calibration frequency generator ***(3)*** built into the display unit can be used to check that the tool is operating correctly.

Refer to the user manual for the checking procedure.

If the check value on the two sensors differs by **512 ± 1Hz**, return the device to ONE-TOO.

ONE TOO

1 ZAC de Saint Esteve

06640 Saint-Jeannet les Plans

Tel: +33 (0)4 92 12 04 80

Fax: +33 (0)4 92 12 04 66

DXX – KXX – FXX – GXX – SXX – PXX – VXX – ZXX – LXX

3 - Operating principle

This device measures the belt frequency.

Frequency is a physical unit which here reflects the belt tension level very accurately.

The unit employed is Hertz **(Hz)**.

The reading head ***(1)*** comprises two sensors ***(1A)*** and ***(1B)***, which are used to measure the belt vibrations after a stimulus is applied.

The measurement must not be made with just one sensor, the other is used as a reference, and should be outside the measurement field.

Both of these sensors can be used either as measuring sensor or as a reference sensor.

Measuring range: **30 to 520 Hz**.

Uncertainty: ± **1 Hz < 100 Hz** and ± **1% >100 Hz**.

Switch the tool on using switch ***(4)***.

Bring the reading head ***(1)*** up to the belt section to be measured.

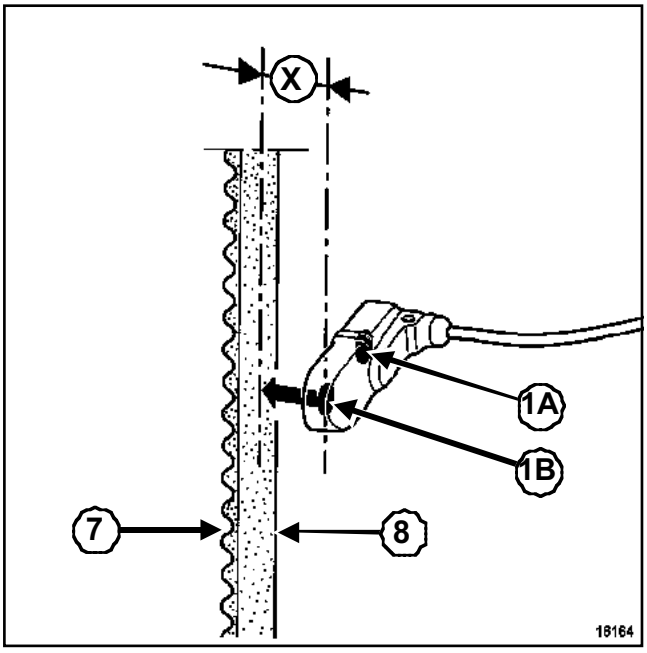

16164

Position the reading head at a distance (**X**) of between around **5 and 10 mm** inclusive from the belt.

The measurement can be made on either face (**7**) or (**8**) of the belt, according to the dimensions.

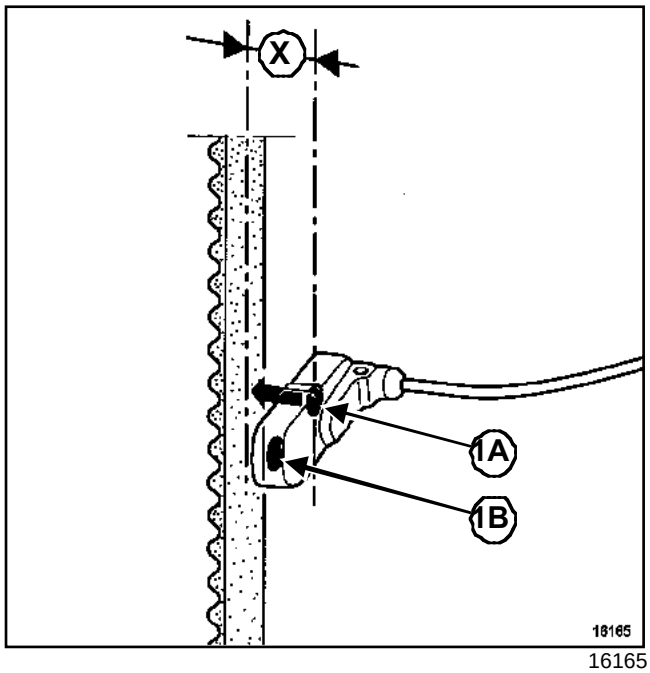

16165

Use either sensors (**1A**) or (**1B**), as long as the reference sensor is outside the measurement field.

DXX – KXX – FXX – GXX – SXX – PXX – VXX – ZXX – LXX

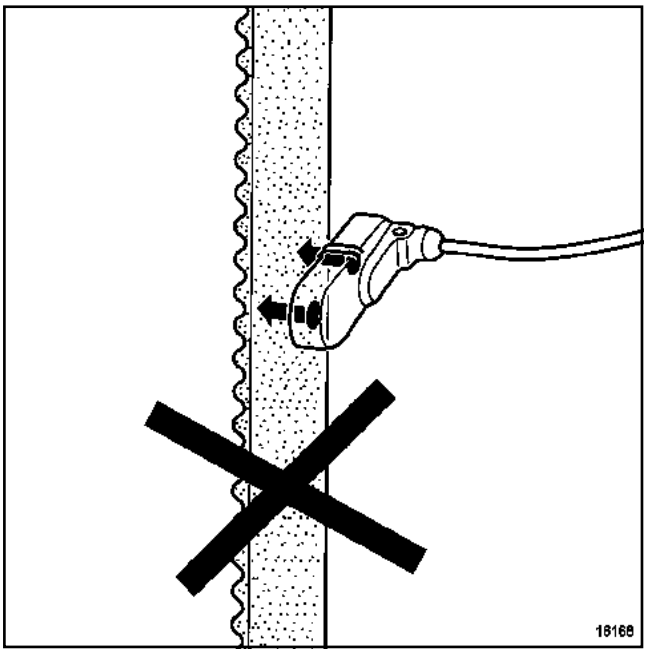

16168

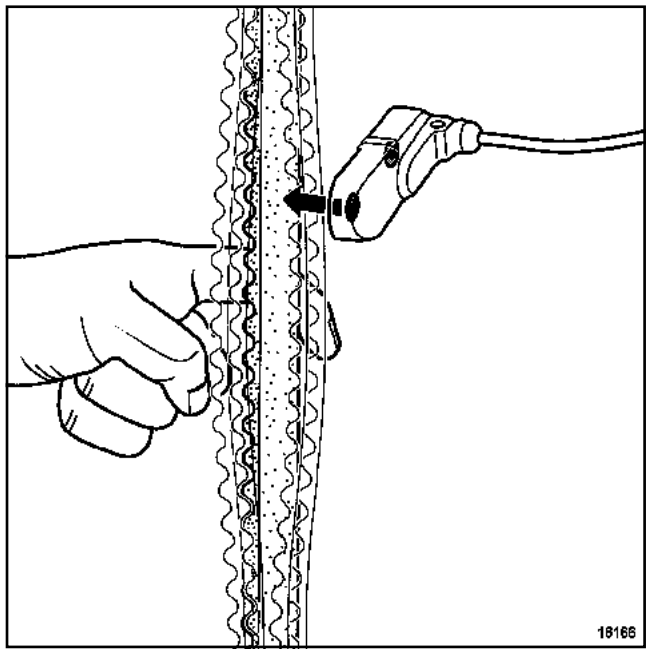

16166

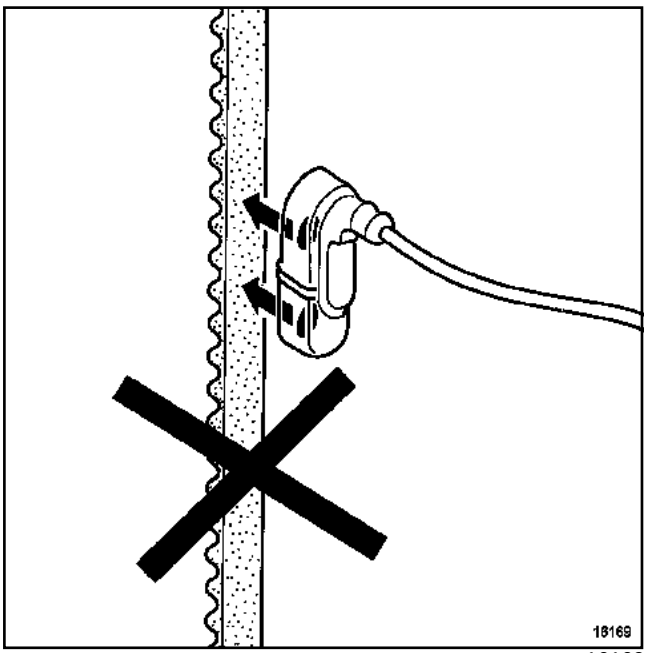

16169

The two sensors should not be facing the belt simultaneously during measurement.

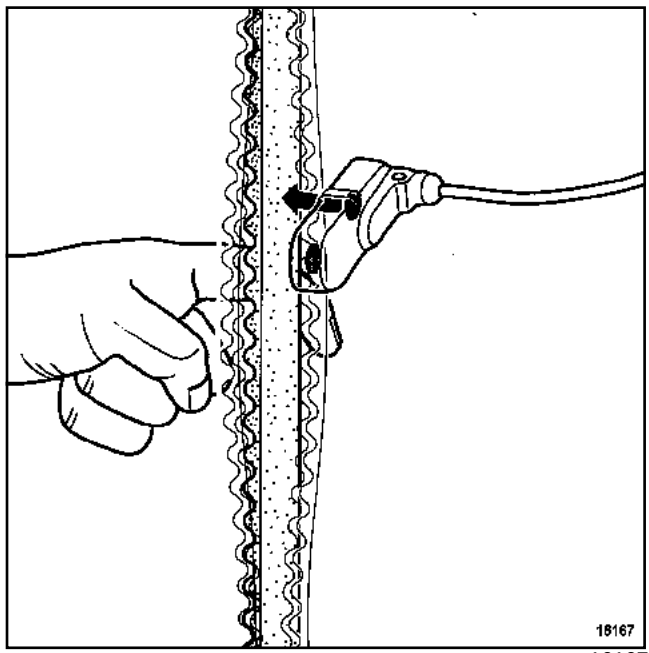

16167

The measurement is made after setting the belt vibrating with a finger.

The measurement is validated by a bleep.

DXX – KXX – FXX – GXX – SXX – PXX – VXX – ZXX – LXX

II - OPERATION OF TOOL MOT.1715

1 - Description

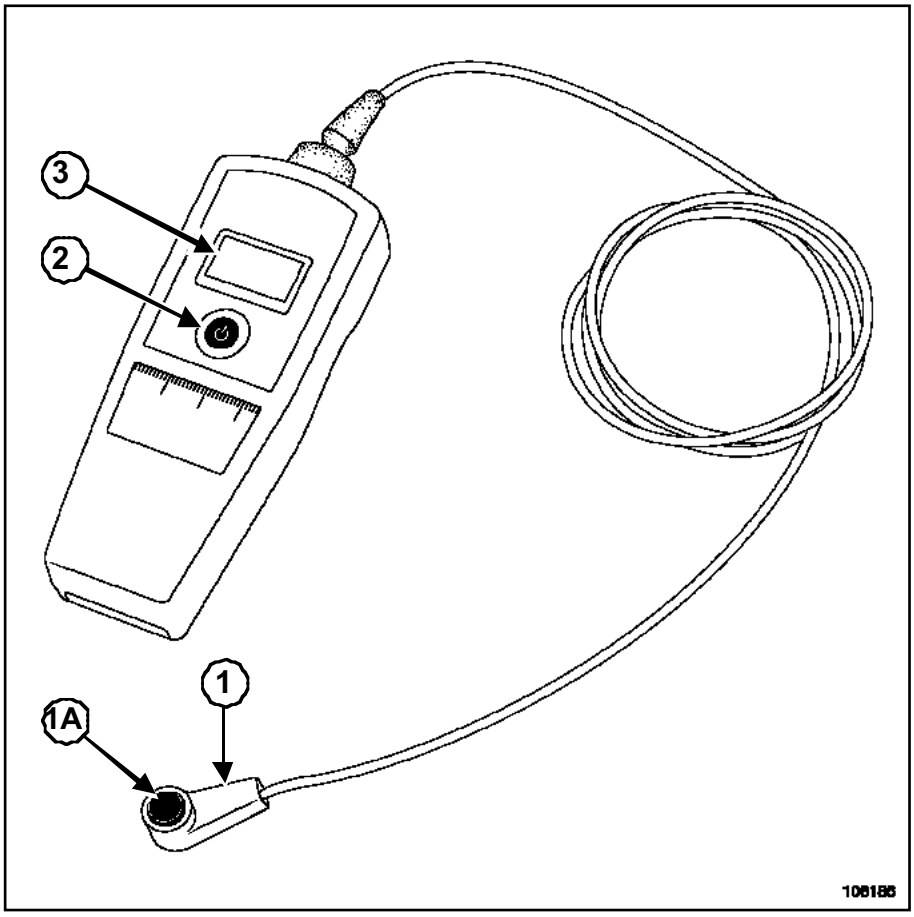

106186

(**1**) Reading head with a sensor (**1A**)

(**2**) Device on/off switch

(**3**)Display

DXX – KXX – FXX – GXX – SXX – PXX – VXX – ZXX – LXX

2 - Tool check

Checking calibration

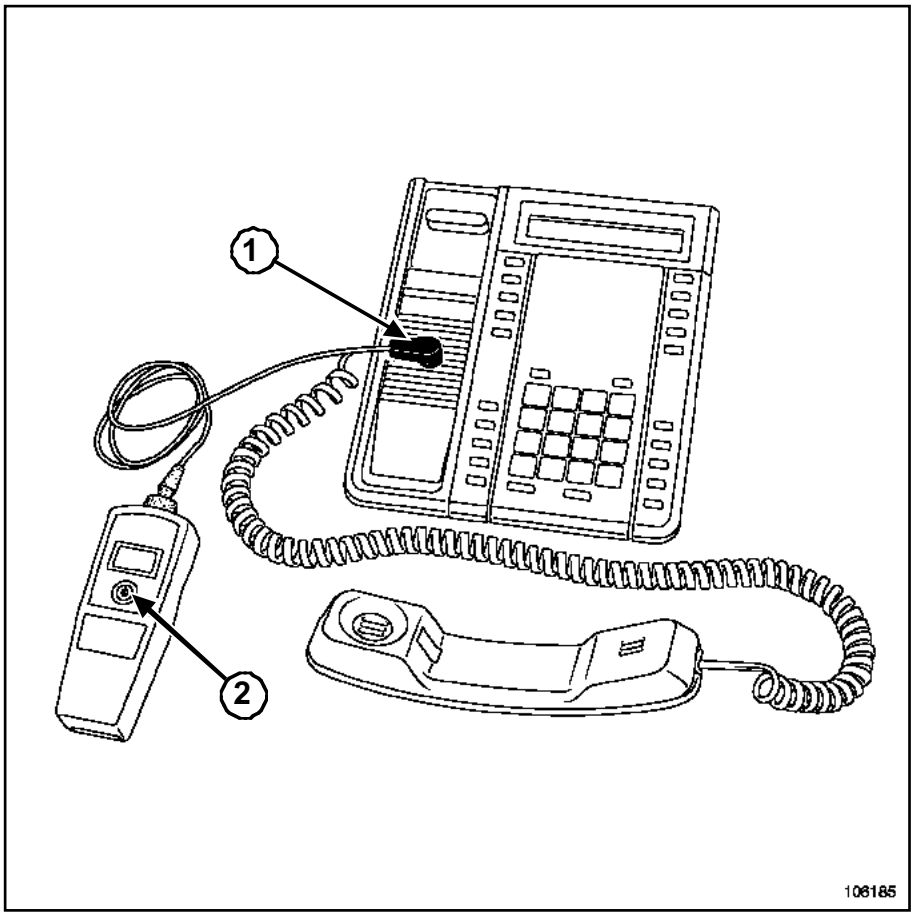

106185

This operation is used to check whether the tool is correctly calibrated.

The telephone tone has a precise frequency that acts as a calibration value.

Switch the tool on using switch (**2**).

Take the telephone receiver off the hook.

Dial the free number **+33 (0)4 92 12 06 54**, the call will never be picked up.

Turn the volume up as far is it will go.

Mount the sensor (**1**) on the external speaker.

Check whether the value obtained corresponds to **440 ± 2 Hz**.

If the value is outside the tolerance range, return the device to ONE-TOO.

ONE TOO

1 ZAC de Saint Esteve

06640 Saint-Jeannet les Plans

Tel: +33 (0)4 92 12 04 80

Fax: +33 (0)4 92 12 04 66

3 - Operating principle

This device measures the belt frequency.

Frequency is a physical unit which here reflects the belt tension level very accurately.

The unit employed is Hertz **(Hz)**.

The reading head ***(1)*** comprises a sensor **1A**, which is used to measure the belt vibrations after a stimulus is applied.

Measuring range: **30 to 520 Hz**.

Uncertainty: ± **1 Hz < 100 Hz** and ± **1% >100 Hz**.

DXX – KXX – FXX – GXX – SXX – PXX – VXX – ZXX – LXX

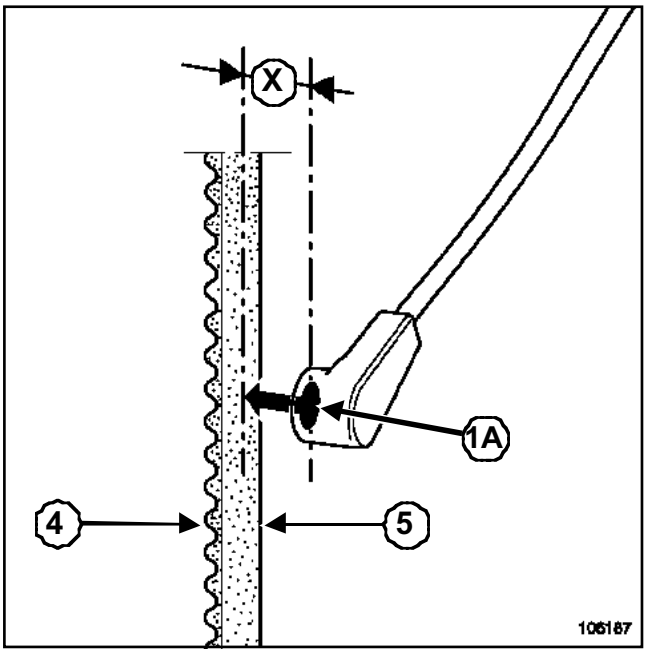

106187

Position the reading head at a distance (**X**) of between around **5 and 10 mm** inclusive from the belt.

The measurement can be made on either face (**4**) or (**5**) of the belt, according to the dimensions.

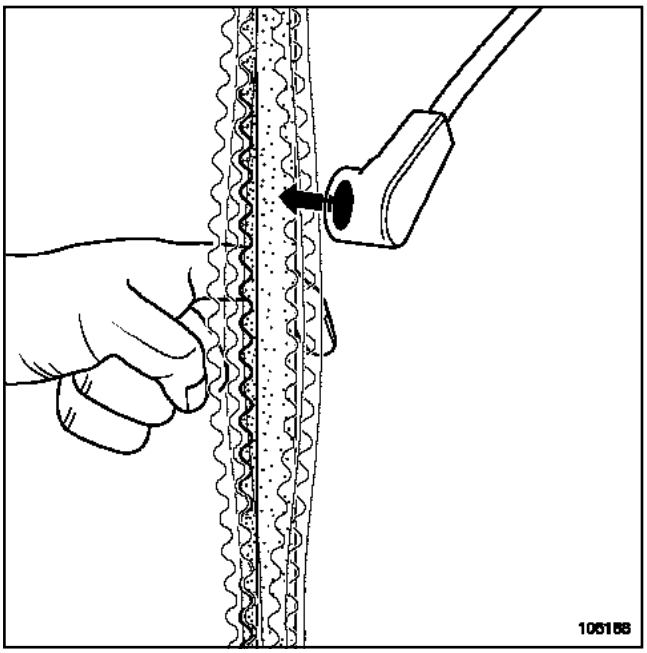

106188

Make the measurement after setting the belt vibrating with a finger.

Timing belt: Assembly instructions

DXX – FXX – GXX – KXX – LXX – PXX – SXX – VXX – ZXX

Essential special tooling		
Mot. 1135-01	KXX – DXX	Timing gear belt tensioner tool
Mot. 1386	KXX – DXX	Timing belt pretensioning tool
Mot. 1501	KXX – DXX	Timing belt prestressing tool
Mot. 1505	DXX – KXX	Belt tension setting tool (frequency meter)
Mot. 1715	DXX – KXX	Belt tension setting tool (frequency meter)
Mot. 1543		Tool for pre-stressing timing belt

There are three distinct tension procedures that must be observed, according to the engine family.

Some engines require:

- a pretensioning torque to be applied (using the special tooling for the engine type) to the belt section to be measured to compensate for all the belt play.
- a **pre-stress T1** slightly greater than the **final fitting tension T2** to be applied.

The purpose of these two operations is to stabilise the belt's internal voltage, to make a reliable tension measurement.

WARNING
Replace any removed belt.

WARNING
When replacing the timing belt specified by the manufacturer, the belt, tension wheel and pulley(s) must be replaced.

I -NO PRETENSIONING TORQUE

II - WITH PRETENSIONING TORQUE

DXX, and D7D or D7F – KXX, and K7M

Engine cold, ambient temperature.

Fit the new belt, with the timing at the setting point (Top Dead Centre).

Set the tension wheel tight against the belt using tool (Mot. 1135-01).

Stress the belt to obtain the recommended fitting tension.

Tighten the tension wheel.

Apply the pretensioning torque using tool (Mot. 1386) for the D7 engine and using tool (Mot. 1501) for the K7M engine, using a torque wrench set to a torque of **1 daNm**, to the belt section to be measured.

Measure the tension using tool (Mot. 1505) or (Mot. 1715).

Check whether it is within the fitting tension tolerance range, otherwise adjust it using tool (Mot. 1135-01).

Tighten the tension wheel.

Turn the crankshaft four revolutions and set the timing at Top Dead Centre.

Apply the pretensioning torque using tool (Mot. 1386) for the D7 engine and using tool (Mot. 1501) for the K7M engine, using a torque wrench set to a torque of **1 daNm**, to the belt section to be measured.

Check that the tension value is within the fitting tension tolerance range, otherwise readjust it by repeating the procedure.

Tighten the tension wheel nut to torque.

DXX – FXX – GXX – KXX – LXX – PXX – SXX – VXX – ZXX

III - WITH PRETENSIONING TORQUE AND PRE-STRESS

FXX, and F8Q or F9Q

Engine cold, ambient temperature.

Fit the new belt, with the timing at the setting point (Top Dead Centre).

Set the tension wheel tight against the belt by screwing a bolt into the lower timing cover.

Apply the pretensioning torque using tool (Mot. 1543) with its various covers, using a torque wrench set to a torque of **1.1 daNm**, to the belt section to be measured.

Measure the tension using tool (Mot. 1505) or (Mot. 1715), then adjust the tension using the screw on the tension wheel until the **pre-stress T1** value is obtained.

Tighten the tension wheel.

Turn the crankshaft four revolutions and set the timing at Top Dead Centre.

Apply the pretensioning torque using tool (Mot. 1543) with its various covers, using a torque wrench set to a torque of **1.1 daNm**, to the belt section to be measured.

Measure the tension using tool (Mot. 1505) or (Mot. 1715), then adjust the tension using the bolt on the tension wheel until the **tension value T2** is obtained.

DXX

D4D or D4F

Engine type	Fitting tension (Hertz)
D4D / D4F	AUTOMATIC TENSIONWHEEL

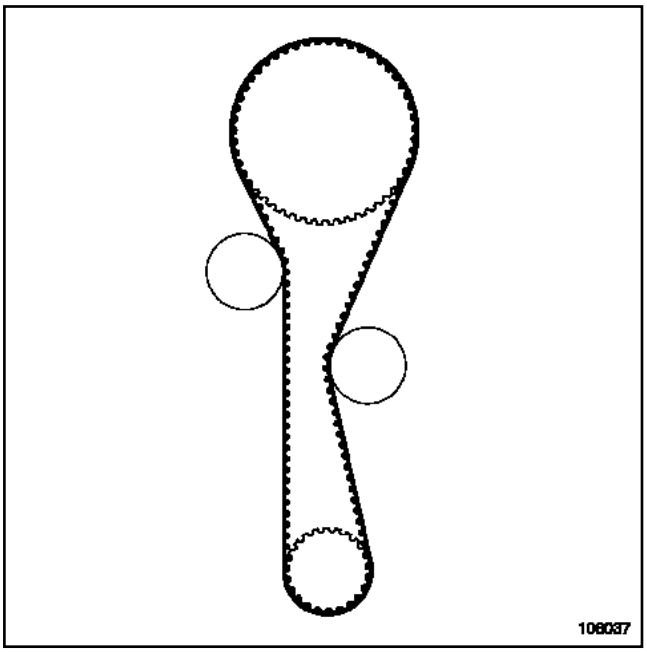

106037

D7D or D7F

Engine type	Fitting tension (Hertz)
D7D/D7F	**145 ± 5**

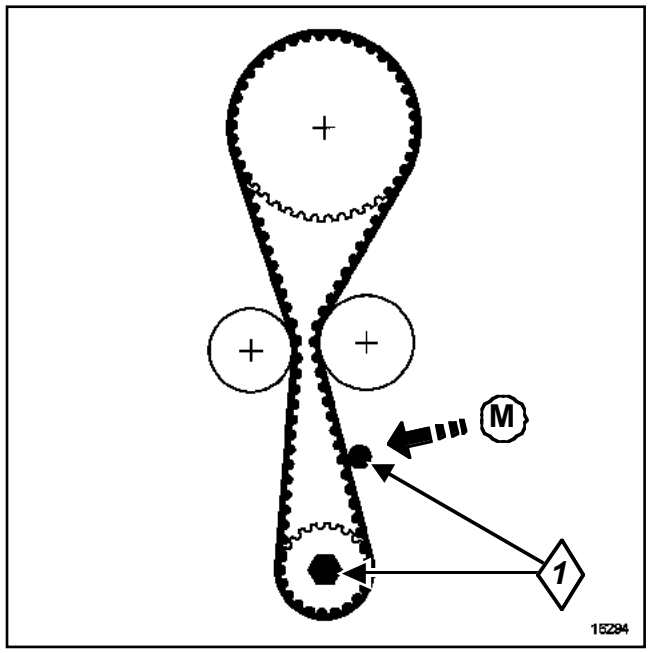

16294

(**1**) Pretensioning torque tool (Mot. 1386)

(**M**) Measuring point

KXX

K4J or K4M

Engine type	Fitting tension (Hertz)
K4J / K4M	AUTOMATIC TENSIONWHEEL

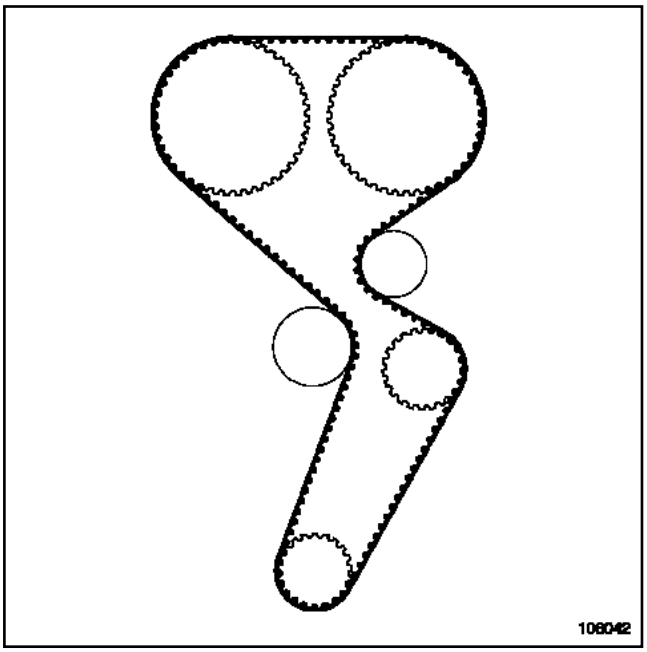

106042

K7J or K7M

Engine type	Fitting tension (Hertz)
K7M 702,703,790	**144 ± 5**
K7J / K7M 704,710,720,744, 745,746	**162 ± 5**

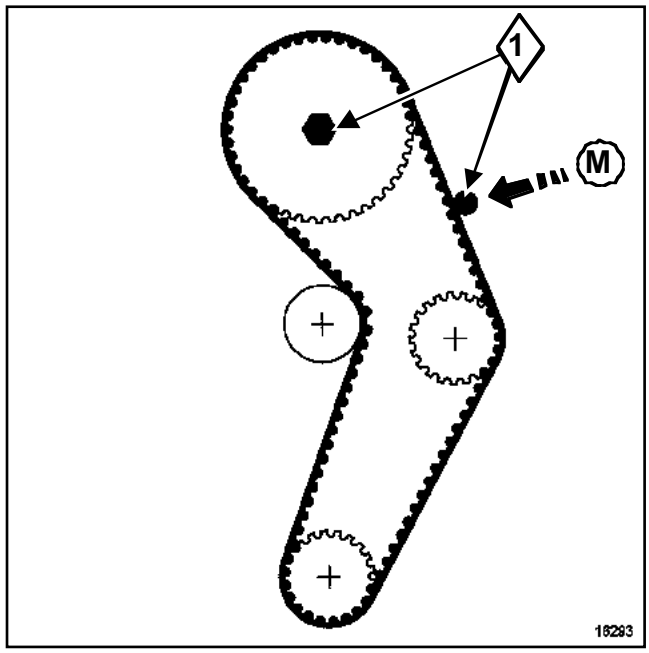

16293

(**1**) Pretensioning torque tool (Mot. 1501)

(**M**)Measuring point

K9K

Engine type	Fitting tension (Hertz)
K9K	AUTOMATIC TENSIONWHEEL

KXX

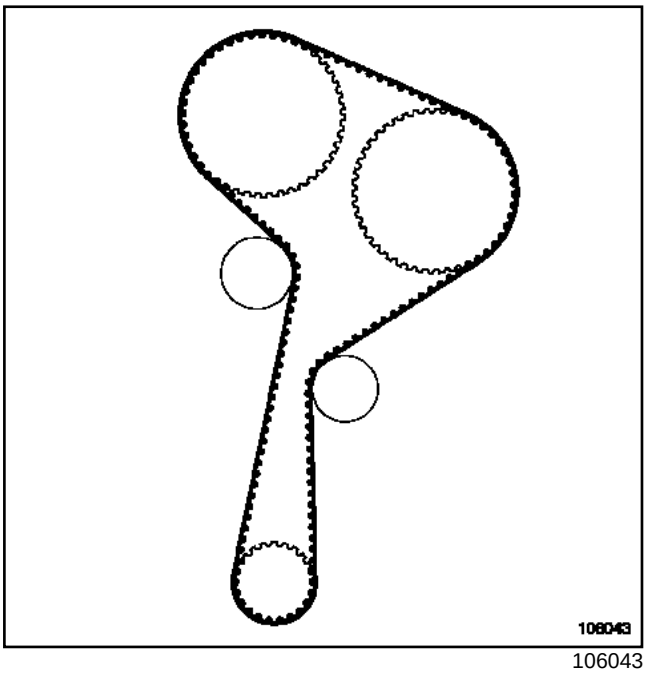

106043

FXX

F4P or F4R or F5R

Engine type	Fitting tension (Hertz)
F4P / F4R / F5R	AUTOMATIC TENSION WHEEL

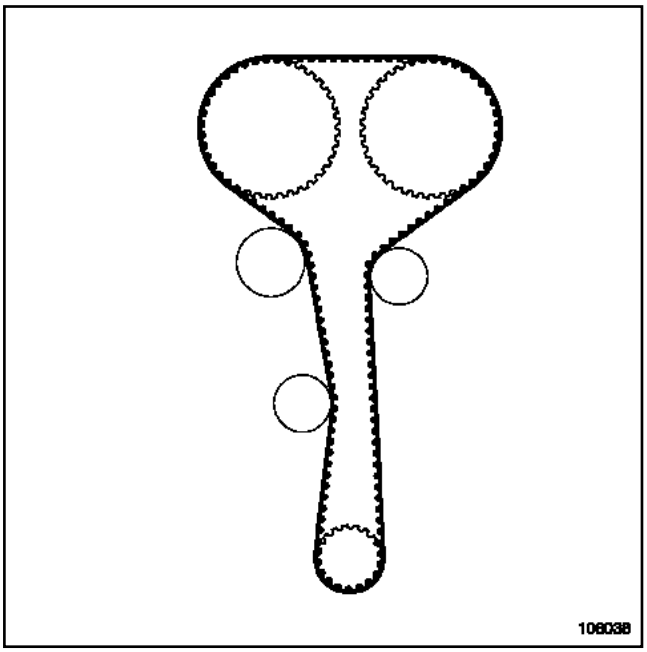

106038

F9Q

Engine type	Fitting tension (Hertz)
F9Q 650,718,750,751, 752,754,760,762,772, 774,800,820,826	**T1 = 95 ± 3** **T2 = 90 ± 3**
F9Q 260,660,757,758, 759,800,804,808,812	**T1 = 90 ± 15** **T2 = 80 ± 15**

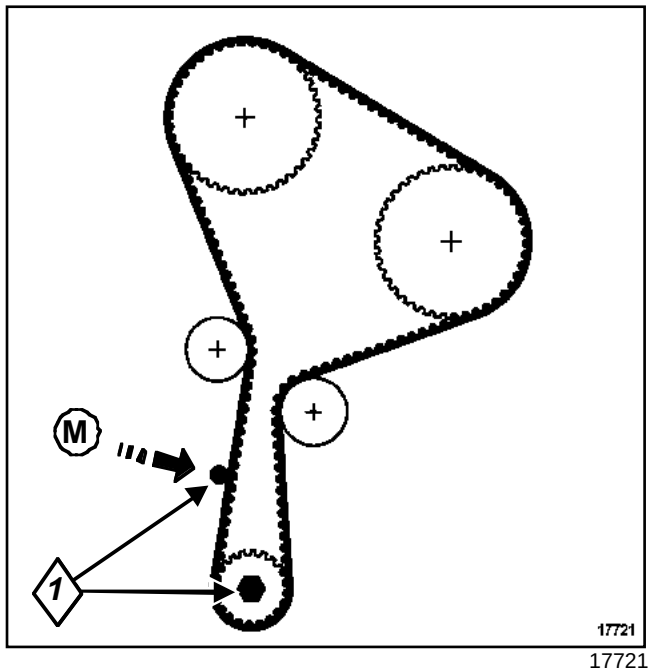

17721

(**1**) Pretensioning torque tool (Mot. 1543)

(**M**)Measuring point

Mot. 1543

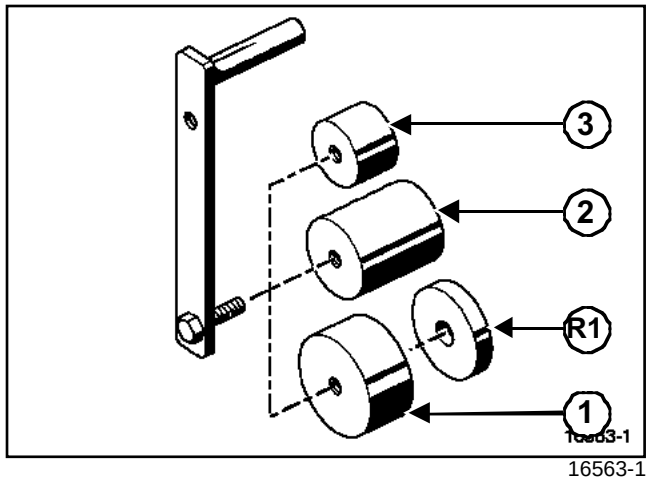

16563-1

FXX

Note:

Use the cover according to the type of support washer.

- (Mot. 1543) + Cover (**1**) + Washer (**R1**) for crankshaft bolts without washers.

- (Mot. 1543) + Cover (**1**) for crankshaft bolts with washers.

- (Mot. 1543) + Cover (Mot.1705) if the support washer has a larger external diameter.

F8Q or F9Q

Engine type	Fitting tension (Hertz)
F9Q 710,717,722,731, 736,744,770,780,782	AUTOMATIC TENSION WHEEL
F8Q/F9Q	**T1 = 68 ± 3** **T2 = 61 ± 5**

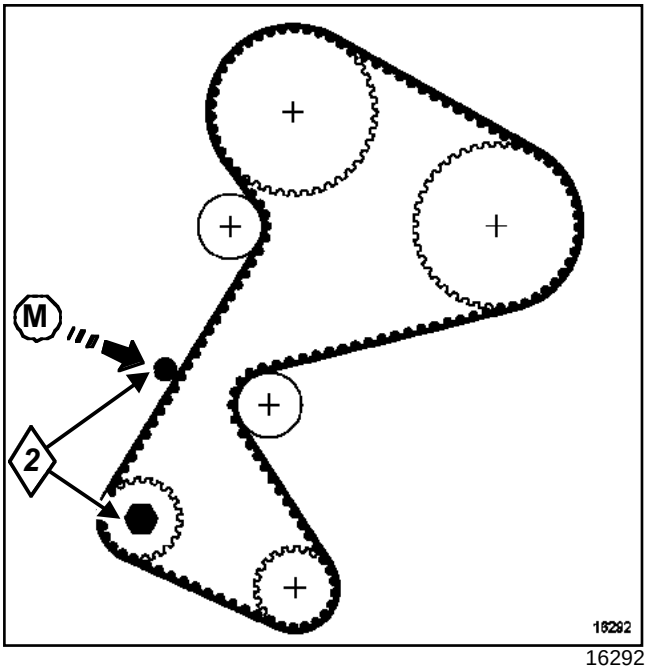

16292

(**2**) Pretensioning torque tool (Mot. 1543)

(**M**)Measuring point

Mot. 1543

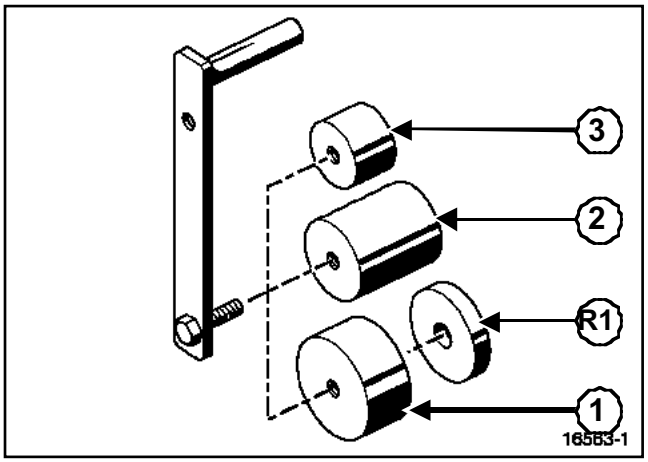

16563-1

Note:

Use the cover according to the type of intermediate shaft sprocket.

- (Mot. 1543) + Cover (**2**).

- (Mot. 1543) + Cover (**3**).

Timing belts: Tension values

GXX

Engine type	Fitting tension (Hertz)
G9T / G9U	AUTOMATIC TENSION WHEEL

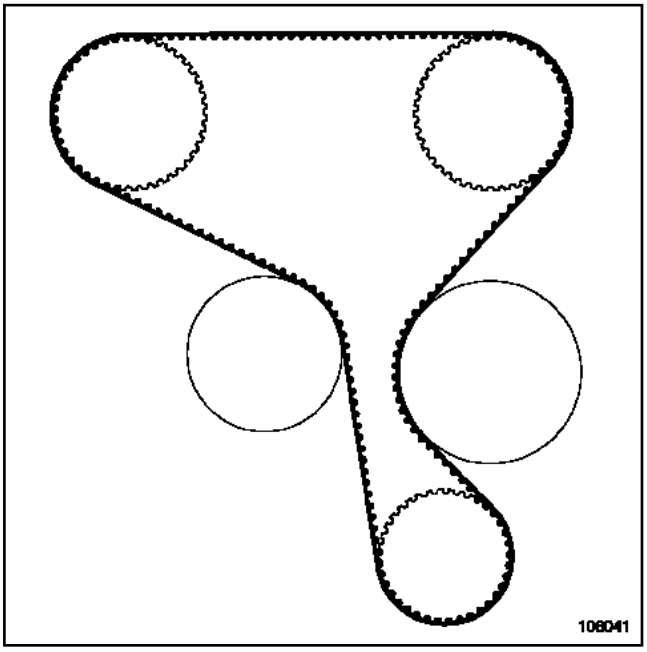

106041

LXX

Engine type	Fitting tension (Hertz)
L7X	**106 ± 4**

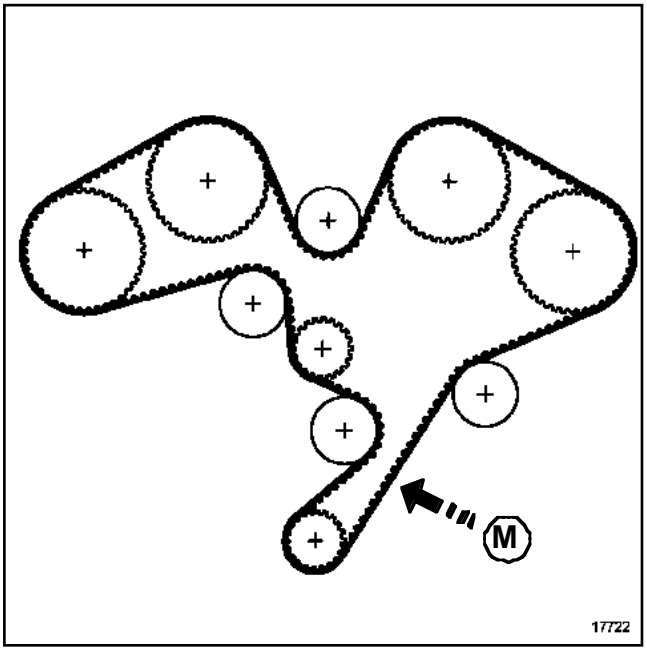

17722

(**M**) Measuring point

Timing belts: Tension values

SXX

Engine type	Fitting tension (Hertz)
S8W / S9W	AUTOMATIC TENSION WHEEL

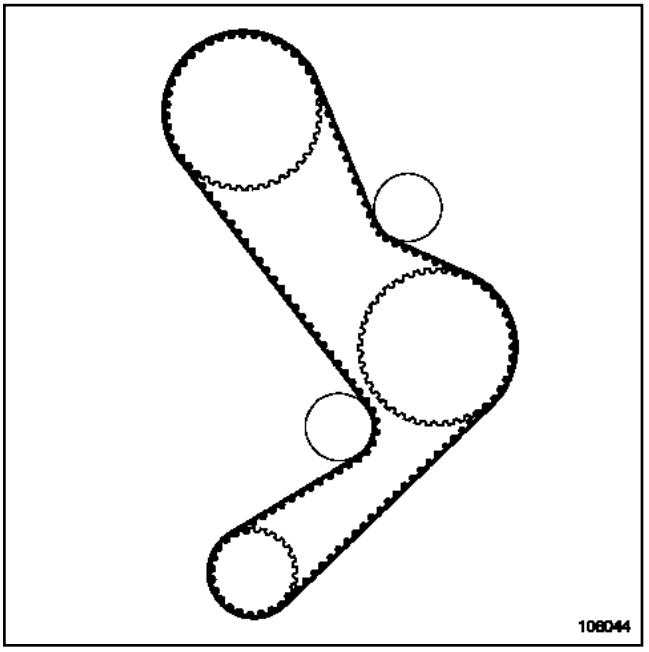

106044

PXX

Engine type	Fitting tension (Hertz)
P9X	AUTOMATIC TENSIONWHEEL

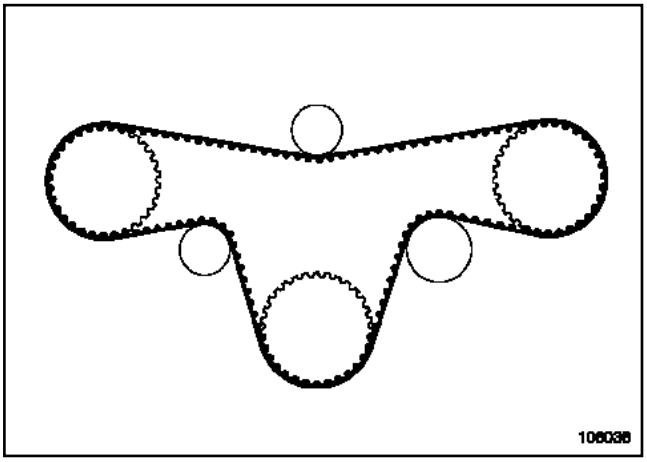

106036

DXX – FXX – GXX – KXX – LXX – PXX – SXX – VXX – ZXX

Essential special tooling	
Mot. 1505	Belt tension setting tool (frequency meter)
Mot. 1715	Belt tension setting tool (frequency meter)

I -GENERAL RULES

WARNING
Replace any removed belt.

WARNING
When replacing the accessories belt recommended by the manufacturer, be sure to replace the belt, the tension wheel and the idler pulley.

II - V BELT

SXX

1 - New belt tensioning process

Engine cold, ambient temperature.

Fit the new belt.

Set the tension wheel tight against the belt and stress it to obtain the recommended fitting tension.

Lock the tension wheel.

Turn the crankshaft through three revolutions.

Check the tension using tool (Mot. 1505) or (Mot. 1715).

Check whether it is within the fitting tension tolerance range; if not readjust it.

2 - Used belt tensioning process

Engine cold, ambient temperature.

Fit the belt.

Set the tension wheel tight against the belt and stress to obtain **80%** of the recommended fitting tension value.

Tighten the tension wheel.

Turn the crankshaft through three revolutions.

Check the tension using tool (Mot. 1505) or (Mot. 1715).

Check whether it is within the tolerance range of **80%** of the fitting tension value; if not readjust it.

Note: the V belt should be replaced according to the condition or the noise produced.

III - RIBBED BELT

Belt tensioning process

Engine cold, ambient temperature.

Fit the new belt.

Set the tension wheel tight against the belt and stress it to obtain the recommended fitting tension.

Lock the tension wheel.

Turn the crankshaft through three revolutions.

Check the tension using tool (Mot. 1505) or (Mot. 1715).

Check whether it is within the fitting tension tolerance range; if not readjust it.

DXX

4-toothed ribbed belt

Engine type	Fitting tension (Hertz)	Belt function
D4D / D4F	**260 ± 5**	Alternator
D7D / D7F	**244 ± 5**	

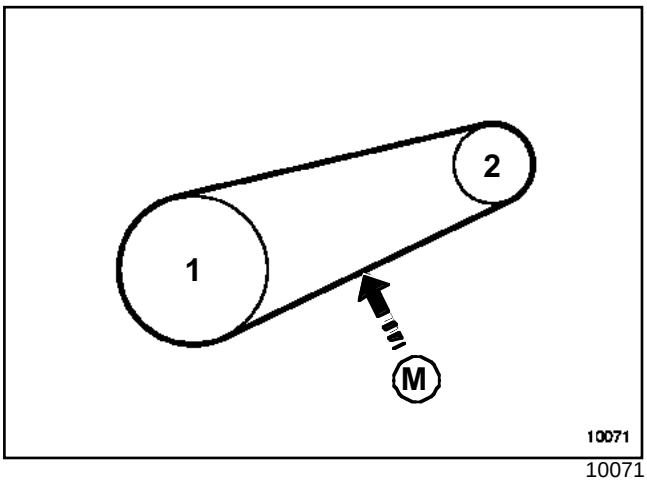

10071

(**1**) Crankshaft

(**2**) Alternator

(**M**) Measuring point

D4D or D4F or D7F

5-toothed ribbed belt

Engine type	Fitting tension (Hertz)	Belt function
D4D / D4F	**210 ± 5**	Power assisted steering pump
D7F	**177 ± 5**	

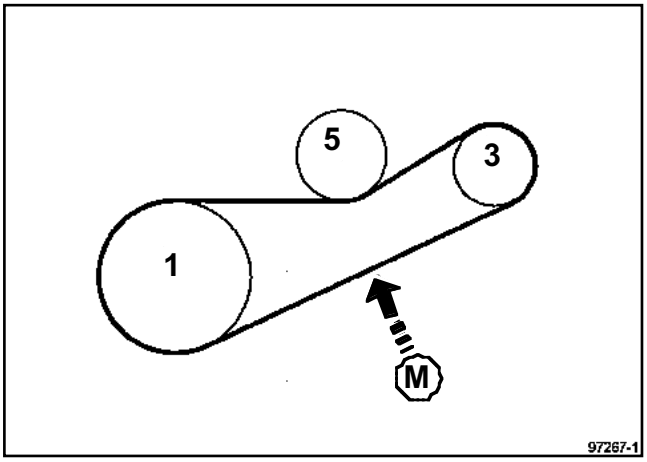

97267-1

(**1**) Crankshaft

(**3**) Power assisted steering pump

(**5**) Tension wheel

(**M**) Measuring point

5-toothed ribbed belt

Engine type	Fitting tension (Hertz)	Belt function
D4D / D4F	**210 ± 5**	Air conditioning compressor
D7D / D7F	**191 ± 5**	

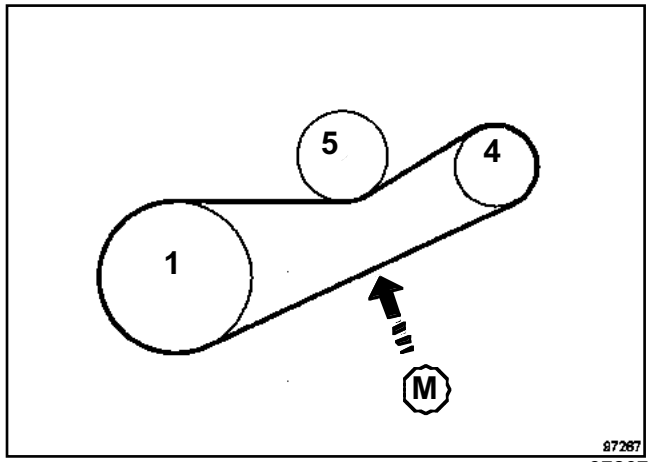

97267

(**1**) Crankshaft

(**4**) Air conditioning compressor

(**5**) Tension wheel

(**M**) Measuring point

D4D or D4F or D7F

5-toothed ribbed belt

Engine type	Fitting tension (Hertz)	Belt function
D4D / D4F	**210 ± 5**	Power assisted steering pump / Air conditioning compressor
D7F	**180 ± 5**	

DXX

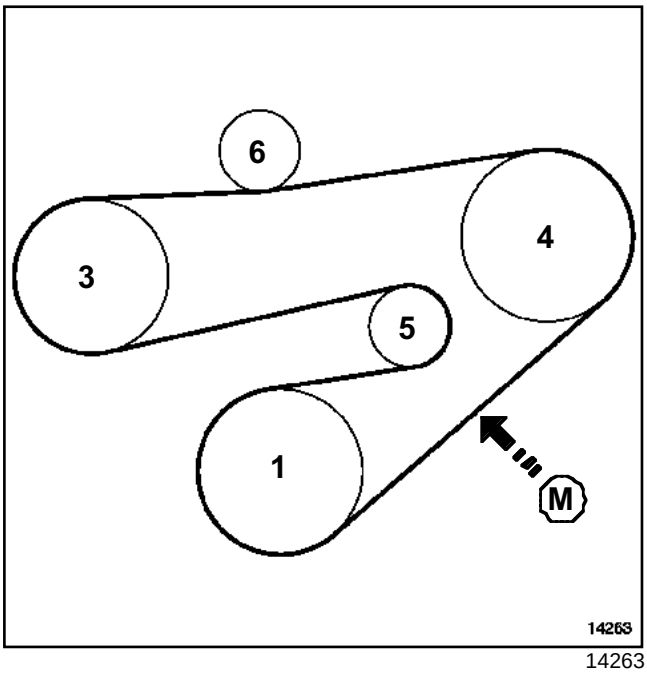

14263

(**1**) Crankshaft

(**3**) Power assisted steering pump

(**4**) Air conditioning compressor

(**5**) Tension wheel

(**6**) Idler pulley

(**M**) Measuring point

KXX

K4J or K4M or K7J or K7M

5-toothed ribbed belt

Engine type	Fitting tension (Hertz)	Belt function
K4J / K4M	**204 ± 5**	Alternator / Power assisted steering pump or Idler pulley
K7J / K7M	**189 ± 5**	

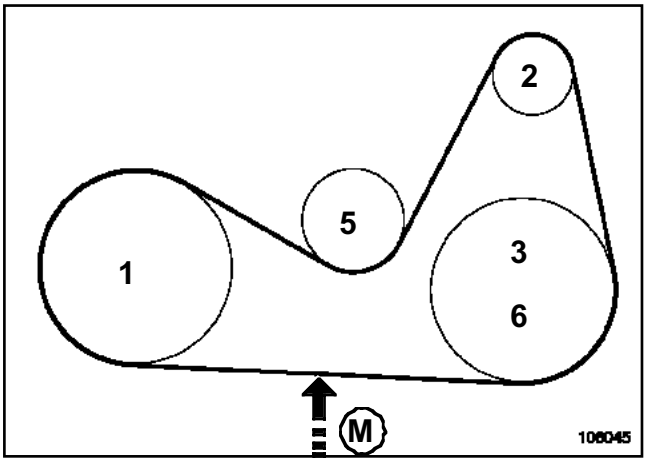

106045

(**1**) Crankshaft

(**2**) Alternator

(**3**) Power assisted steering pump

(**5**) Tension wheel

(**6**) Idler pulley

(**M**) Measuring point

WARNING
Observe the belt positioning on the various pulleys.
Check that all the external teeth are free.

Crankshaft pulley

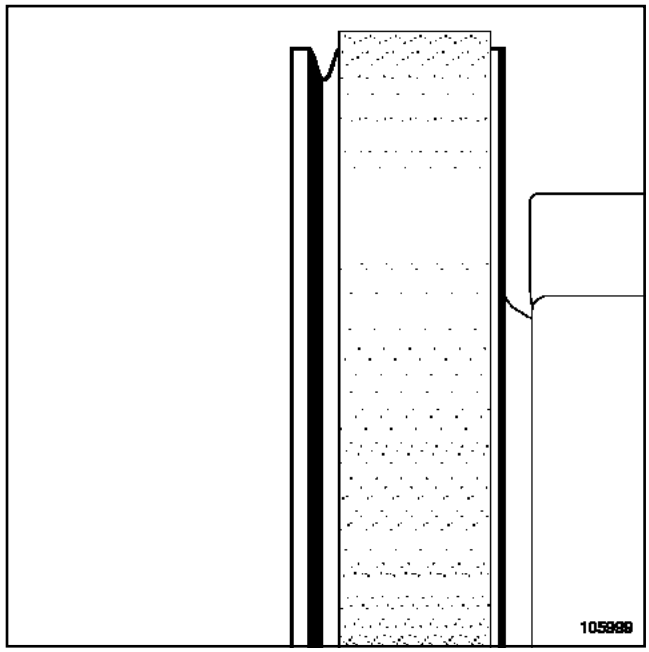

105999

Alternator pulley

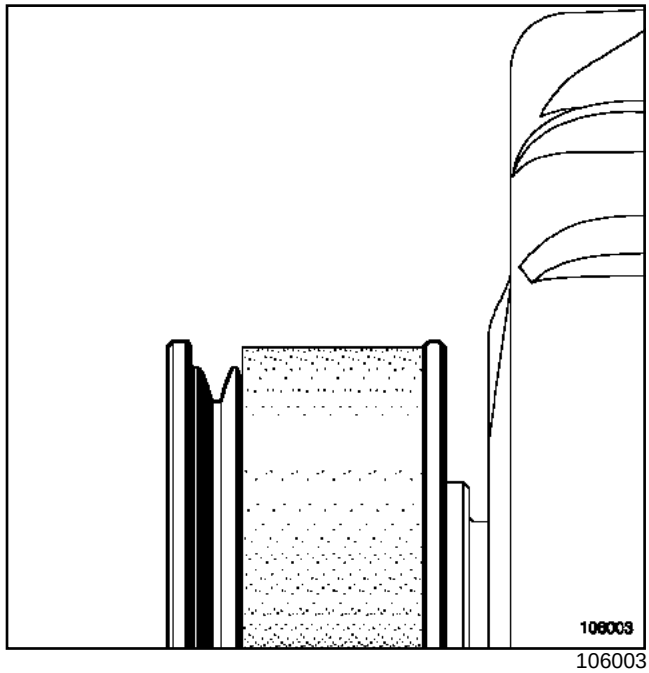

106003

KXX

Power assisted steering pump pulley or idler pulley

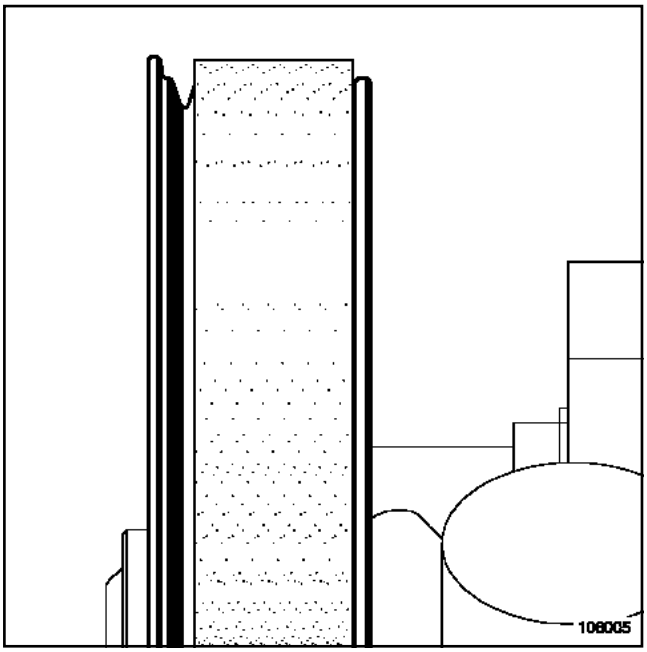

106005

K4J or K4M or K9K

Engine type	Belt function	Fitting tension (Hertz)
K4J 730,732 / K4M 760,761, 764,782 / K9K	Alternator	**234 ± 5**

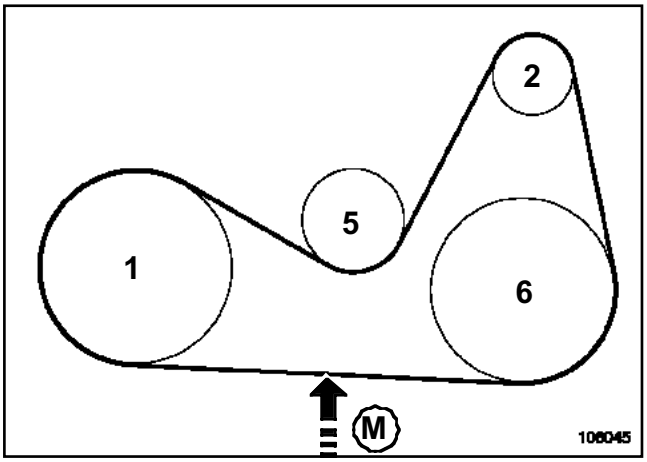

106045

(**1**) Crankshaft

(**2**) Alternator

(**5**) Tension wheel

(**6**) Idler pulley

(**M**) Measuring point

WARNING

Observe the belt positioning on the various pulleys.

Check that the idler pulley wheel internal tooth is free.

Idler pulley wheel

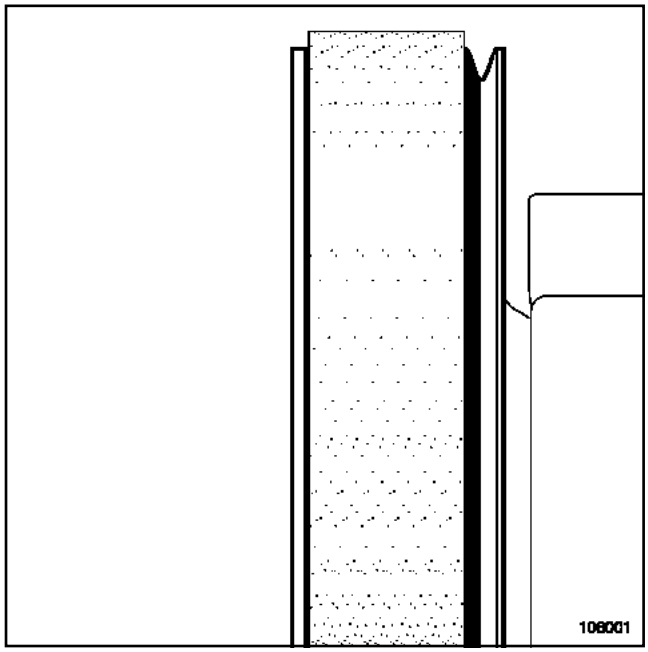

106001

K4J or K4M or K7J or K7M

Engine type	Belt function	Fitting tension (Hertz)
K4J / K4M / K7J / K7M	Alternator / Air conditioning compressor / Power assisted steering pump	AUTOMATIC TENSION WHEEL

Accessories belt: Tension values

KXX

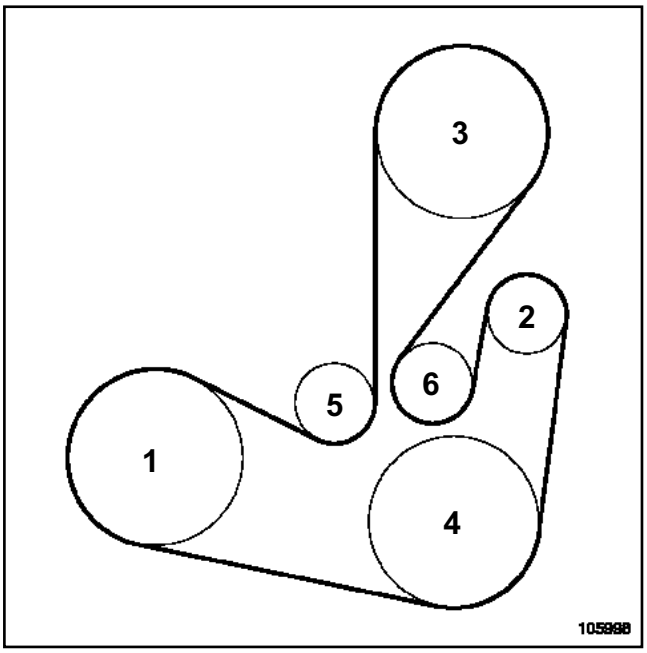

105998

(**1**) Crankshaft

(**2**) Alternator

(**3**) Power assisted steering pump

(**4**) Air conditioning compressor

(**5**) Tension wheel

(**6**) Idler pulley

WARNING
Observe the belt positioning on the various pulleys.
Check that all the internal teeth are free.

Crankshaft pulley

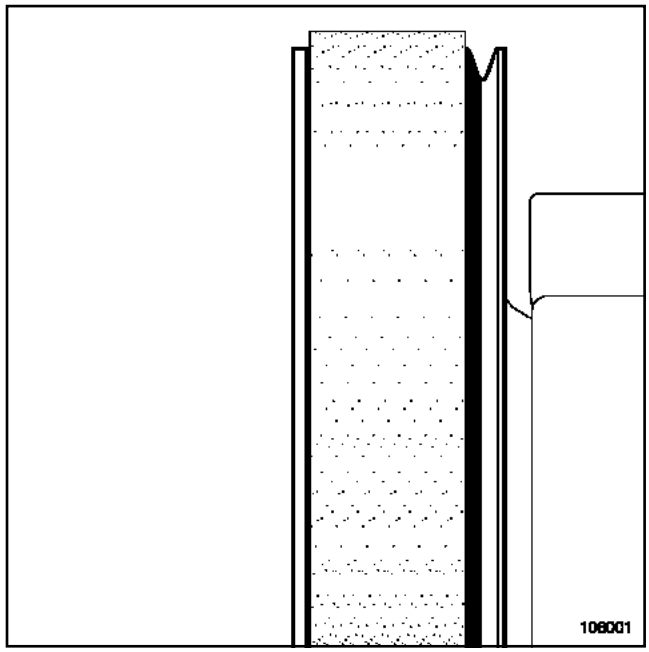

106001

Alternator pulley

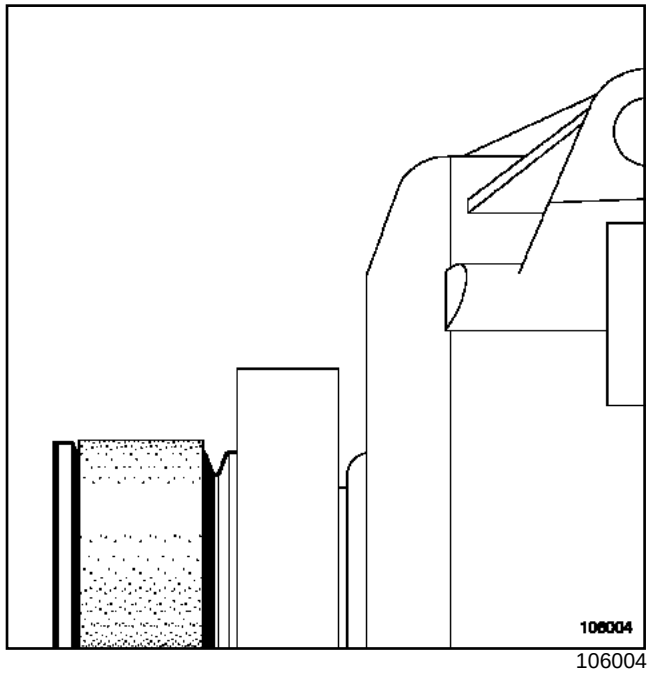

106004

KXX

Power assisted steering pump pulley

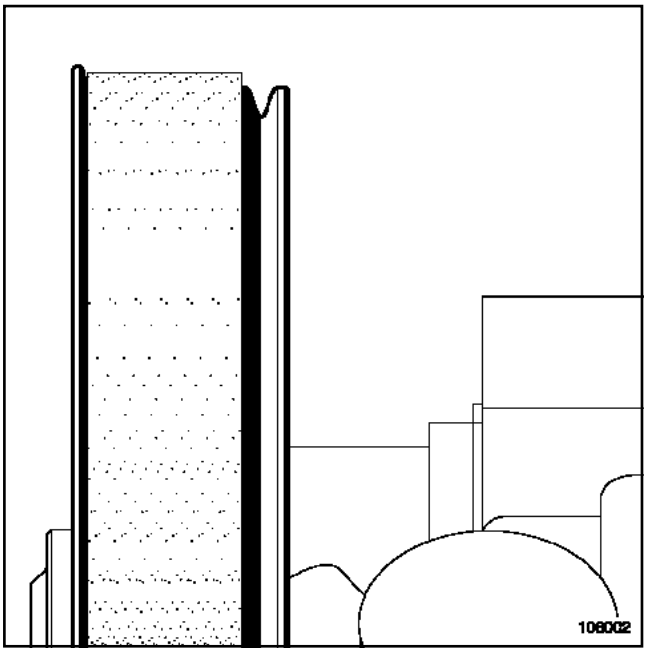

106002

Air conditioning compressor pulley

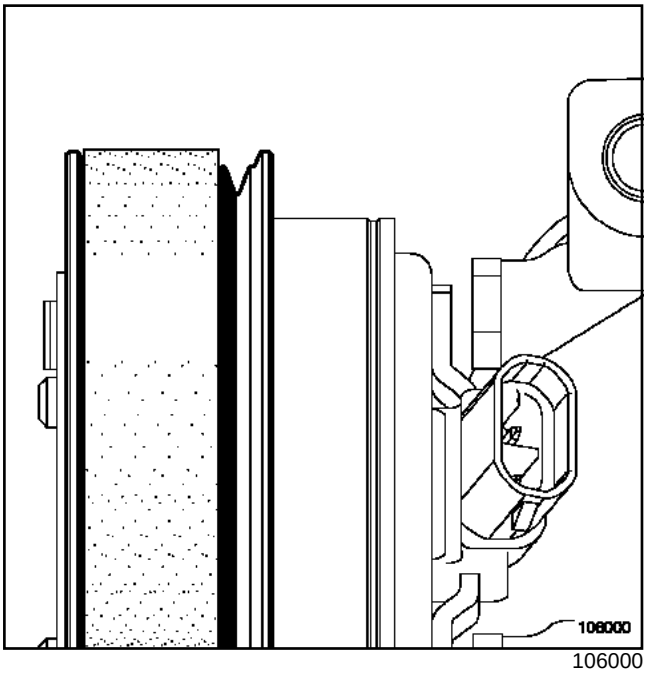

106000

K4J or K4M or K9K

Engine type	Belt function	Fitting tension (Hertz)
K4J 730,732 / K4M 760,761, 764,782 / K9K	Alternator / Air conditioning compressor	AUTOMATIC TENSION WHEEL

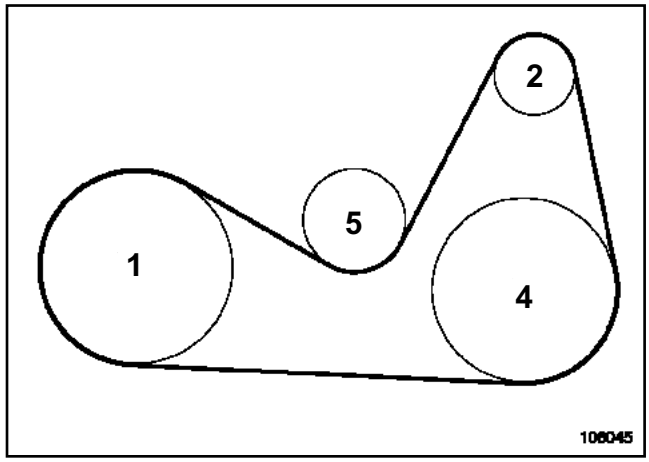

106045

(**1**) Crankshaft

(**2**) Alternator

(**4**) Air conditioning compressor

(**5**) Tension wheel

WARNING

Observe the belt positioning on the various pulleys.

Check that the air conditioning compressor pulley internal tooth is free.

KXX

Air conditioning compressor pulley

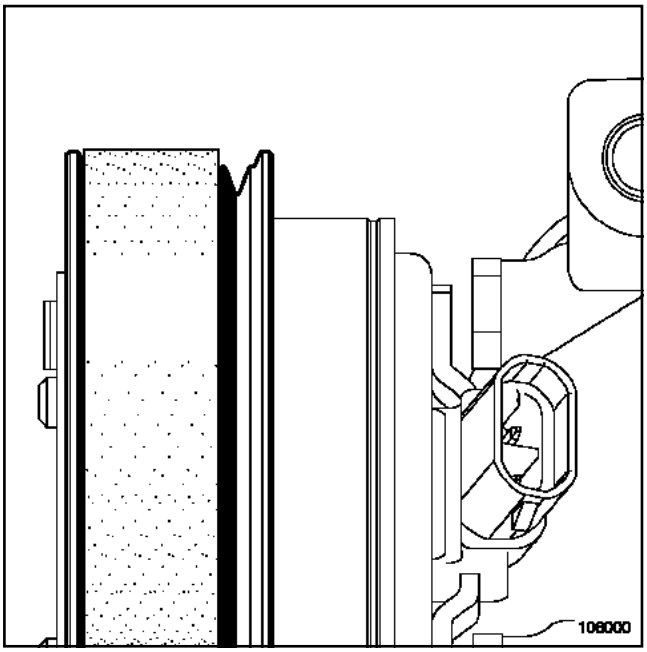

106000

K7M

Engine type	Belt function	Fitting tension (Hertz)
K7M	Alternator	**153 ± 5**

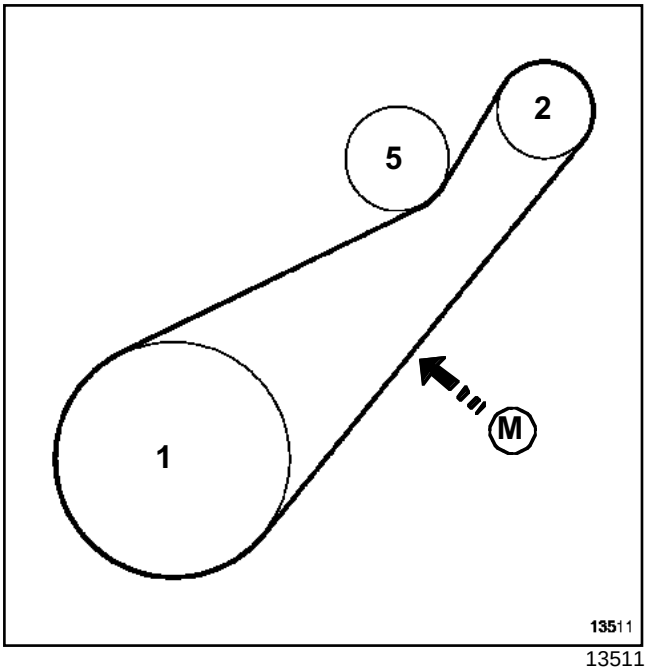

13511

(**1**) Crankshaft

(**2**) Alternator

(**5**) Tension wheel

(**M**) Measuring point

K7M

Engine type	Fitting tension (Hertz)	Belt function
K7M 744, 745	AUTOMATIC TENSION WHEEL	Air conditioning compressor / Servo pump
K7M 702, 703,720,790	**182 ± 5**	

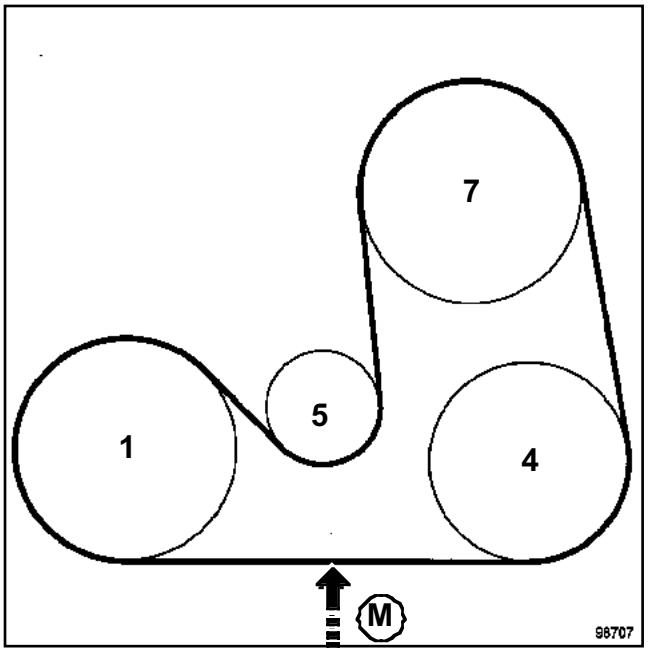

98707

(**1**) Crankshaft

(**4**) Air conditioning compressor

(**5**) Tension wheel

(**7**) Servo pump

(**M**) Measuring point

KXX

K7M

Engine type	Belt function	Fitting tension (Hertz)
K7M	Power assisted steering pump	**178 ± 5**

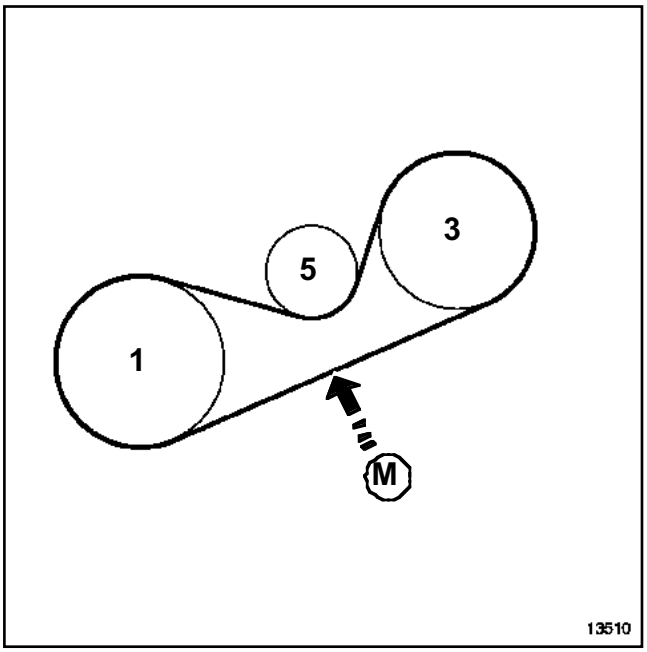

13510

(**1**) Crankshaft

(**3**) Power assisted steering pump

(**5**) Tension wheel

(**M**) Measuring point

K7M

Engine type	Belt function	Fitting tension (Hertz)
K7M	Alternator	**254 ± 5**

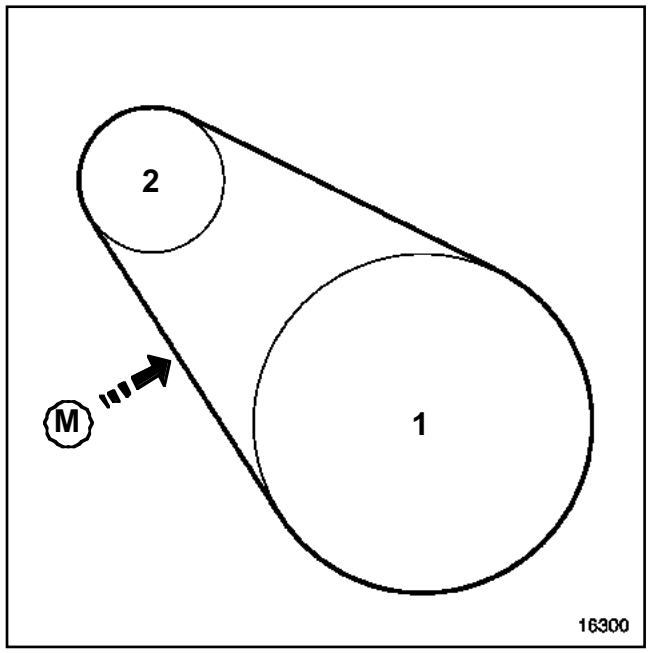

16300

(**1**) Crankshaft

(**2**) Alternator

(**M**) Measuring point

K7M

Engine type	Belt function	Fitting tension (Hertz)
K7M	Power assisted steering pump	**190 ± 5**

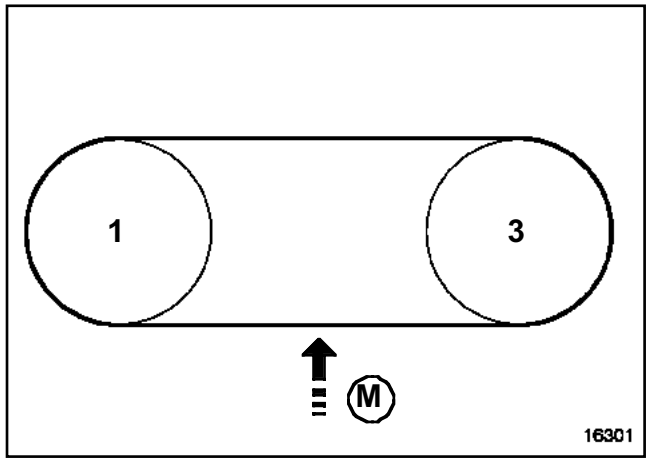

16301

(**1**) Crankshaft

KXX

(**3**) Power assisted steering pump

(**M**) Measuring point

FXX

F4P or F4R or F8Q or F9Q

Engine type	Belt function	Fitting tension (Hertz)
F4P / F4R / F8Q / F9Q	Alternator / Power assisted steering pump / Water pump	**188 ± 5**

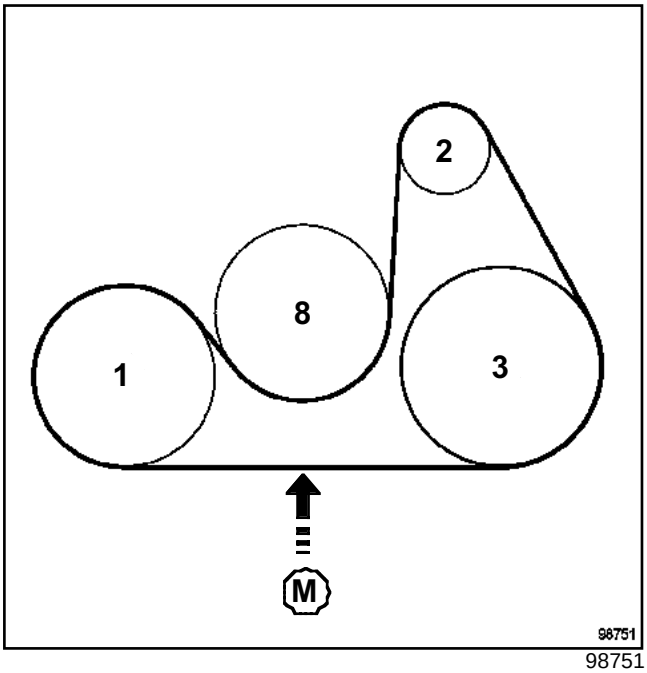

98751

(**1**) Crankshaft

(**2**) Alternator

(**3**) Power assisted steering pump

(**8**) Water pump

(**M**) Measuring point

F8Q or F9Q

Engine type	Belt function	Fitting tension (Hertz)
F8Q/F9Q	Alternator / Air conditioning compressor / Water pump	**188 ± 5**

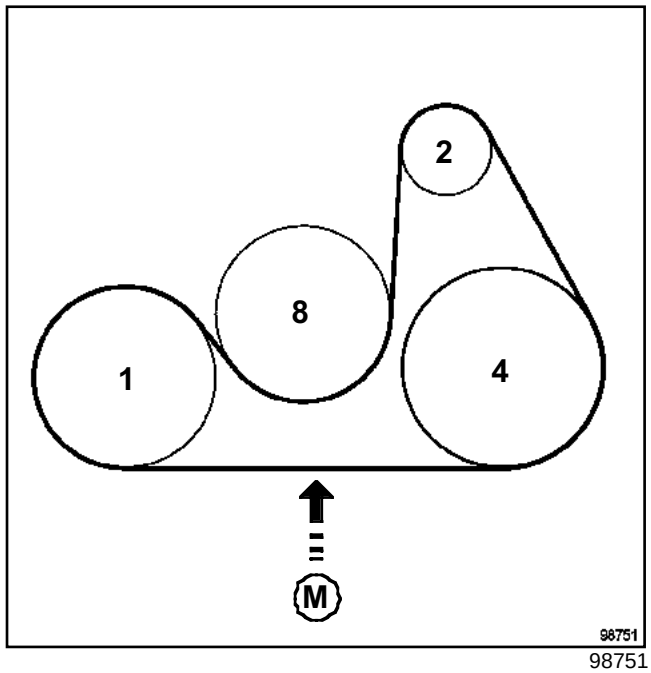

98751

(**1**) Crankshaft

(**2**) Alternator

(**4**) Air conditioning compressor

(**8**) Water pump

(**M**) Measuring point

F8Q

Engine type	Belt function	Fitting tension (Hertz)
F8Q	Alternator / Power assisted steering pump / Water pump	**166 ± 5**

FXX

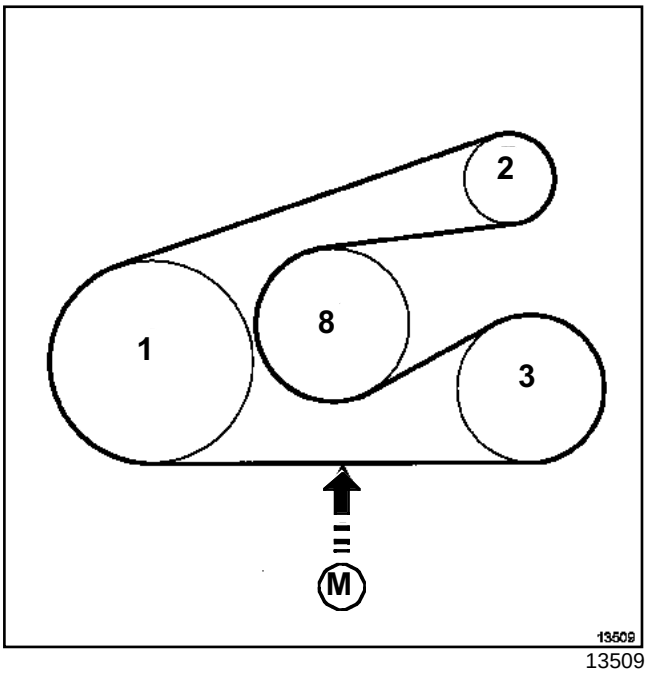

13509

(**1**) Crankshaft

(**2**) Alternator

(**3**) Power assisted steering pump

(**8**) Water pump

(**M**) Measuring point

F8Q

Engine type	Belt function	Fitting tension (Hertz)
F8Q	Alternator / Water pump	**165 ± 5**

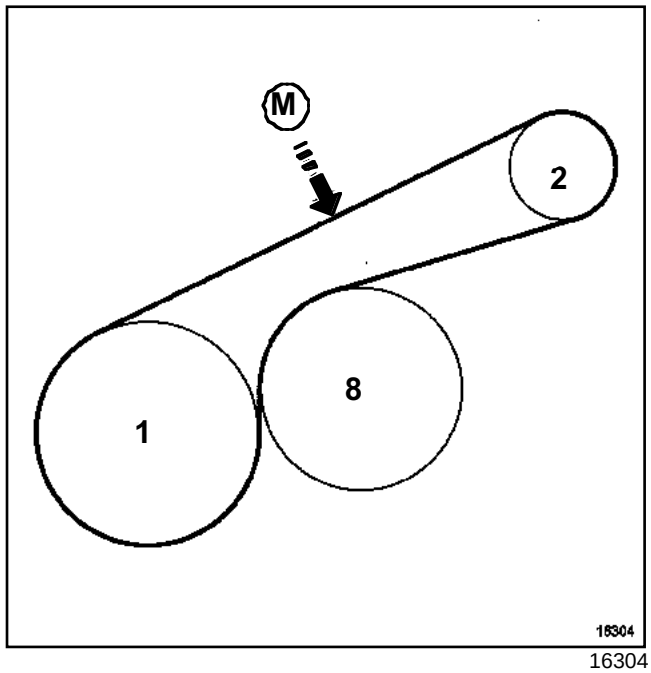

16304

(**1**) Crankshaft

(**2**) Alternator

(**8**) Water pump

(**M**) Measuring point

F4P or F4R or F5R or F9Q

Engine type	Belt function	Fitting tension (Hertz)
F4P / F4R / F5R / F9Q	Alternator / Power assisted steering pump / Air conditioning compressor	AUTOMATIC TENSION WHEEL

FXX

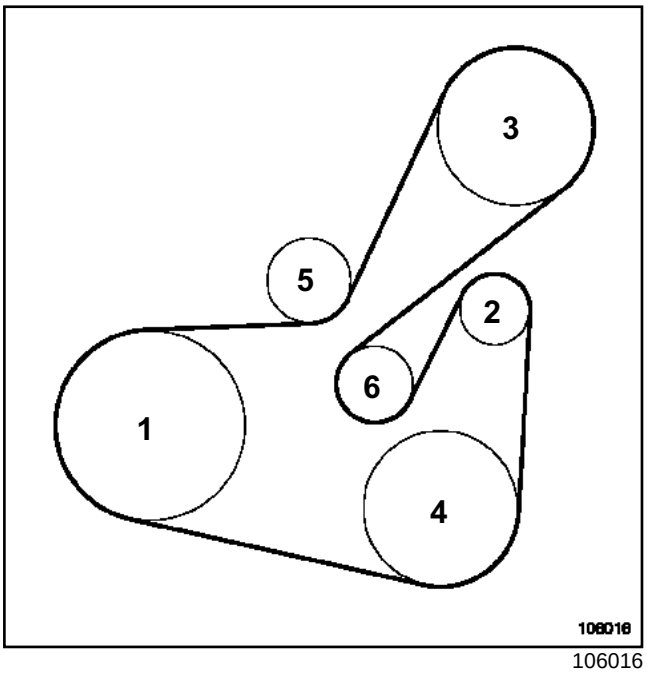

106016

(**1**) Crankshaft

(**2**) Alternator

(**3**) Power assisted steering pump

(**4**) Air conditioning compressor

(**5**) Tension wheel

(**6**) Idler pulley

F4P or F4R or F5R

Engine type	Belt function	Fitting tension (Hertz)
F4P / F4R / F5R	Alternator / Power assisted steering pump / Air conditioning compressor / Water pump	AUTOMATIC TENSION WHEEL

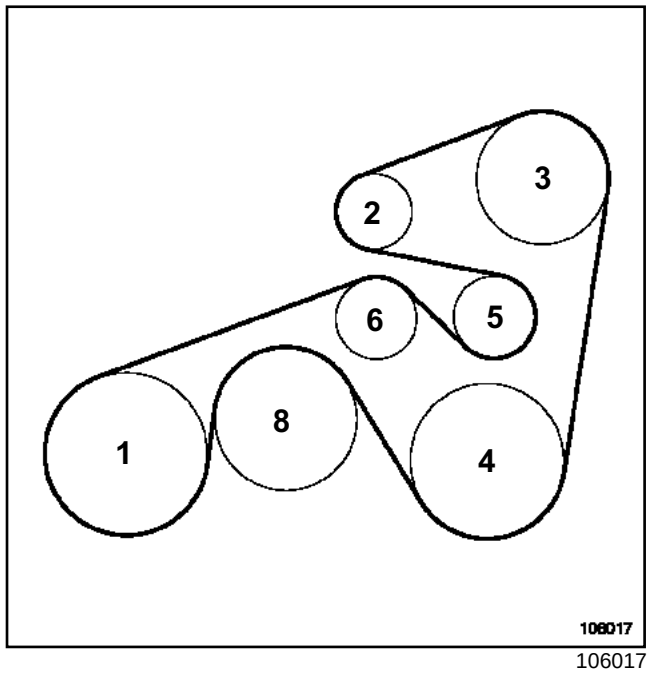

106017

(**1**) Crankshaft

(**2**) Alternator

(**3**) Power assisted steering pump

(**4**) Air conditioning compressor

(**5**) Tension wheel

(**6**) Idler pulley

(**8**) Water pump

WARNING

Observe the belt positioning on the various pulleys.

Check that the power assisted steering pump and air conditioning compressor pulley internal teeth are free.

FXX

Power assisted steering pump pulley

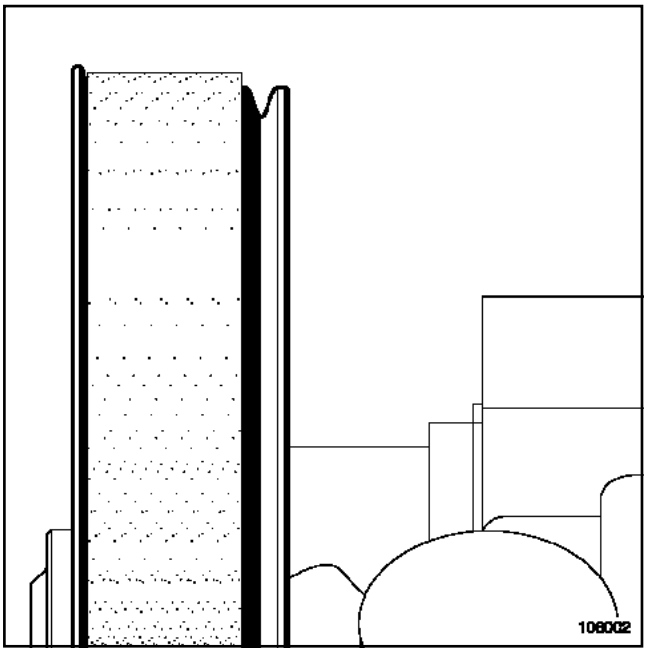

106002

Air conditioning compressor pulley

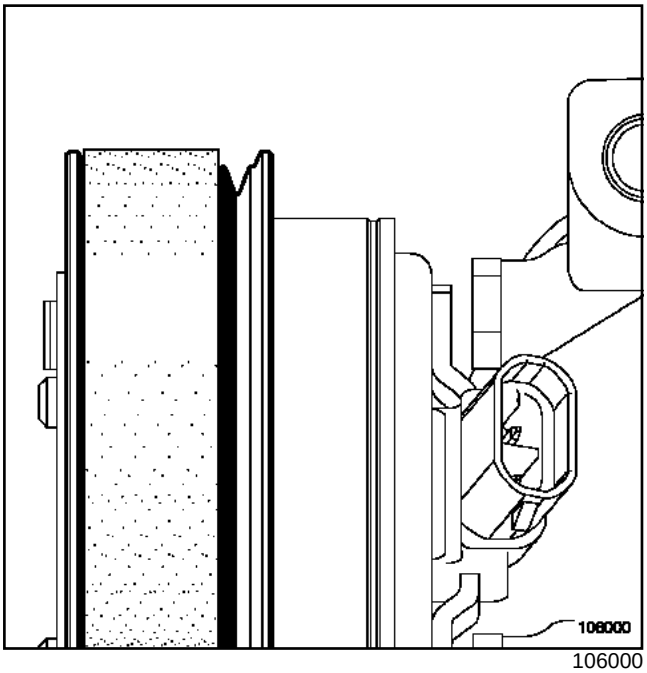

106000

F4R or F9Q

Engine type	Belt function	Fitting tension (Hertz)
F4R	Alternator / Power assisted steering pump	AUTOMATIC TENSION WHEEL
F4R / F9Q	Alternator / Air conditioning compressor	

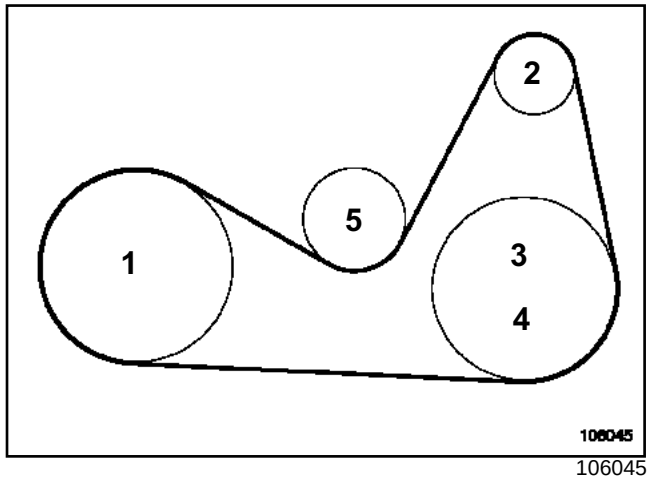

106045

(**1**) Crankshaft

(**2**) Alternator

(**3**) Power assisted steering pump

(**4**) Air conditioning compressor

(**5**) Tension wheel

F4R

Engine type	Belt function	Fitting tension (Hertz)
F4R	Alternator / Power assisted steering pump / Air conditioning compressor / Water pump	AUTOMATIC TENSION WHEEL

FXX

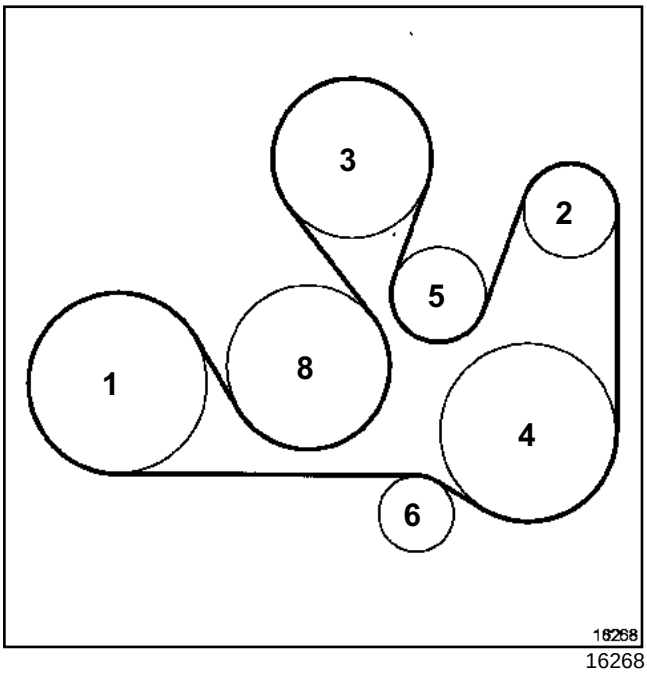

16268

(**1**) Crankshaft
(**2**) Alternator
(**3**) Power assisted steering pump
(**4**) Air conditioning compressor
(**5**) Tension wheel
(**6**) Idler pulley
(**8**) Water pump

F8Q or F9Q

Engine type	Belt function	Fitting tension (Hertz)
F8Q/F9Q	Alternator / Power assisted steering pump / Air conditioning compressor / Water pump	AUTOMATIC TENSION WHEEL

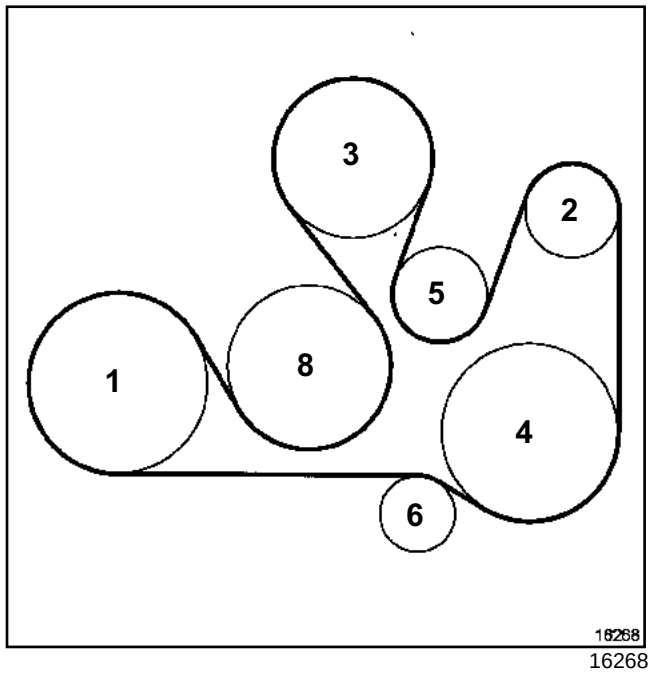

16268

(**1**) Crankshaft
(**2**) Alternator
(**3**) Power assisted steering pump
(**4**) Air conditioning compressor
(**5**) Tension wheel
(**6**) Idler pulley
(**8**) Water pump

F8Q

Engine type	Belt function	Fitting tension (Hertz)
F8Q	Alternator / Power assisted steering pump / Air conditioning compressor / Water pump	**170 ± 5**

FXX

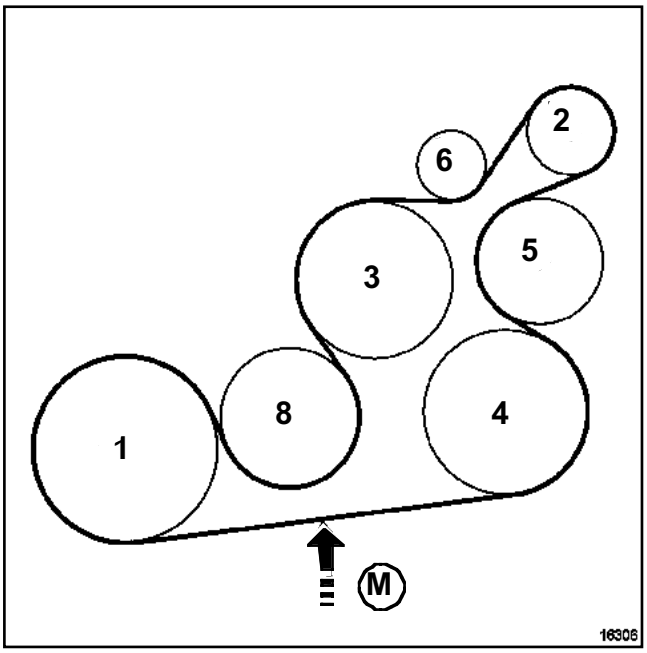

16306

(**1**) Crankshaft

(**2**) Alternator

(**3**) Power assisted steering pump

(**4**) Air conditioning compressor

(**5**) Tension wheel

(**6**) Idler pulley

(**8**) Water pump

(**M**) Measuring point

GXX

Engine type	Belt function	Fitting tension (Hertz)
G9T / G9U	Alternator / Power assisted steering pump / Air conditioning compressor	AUTOMATIC TENSION WHEEL

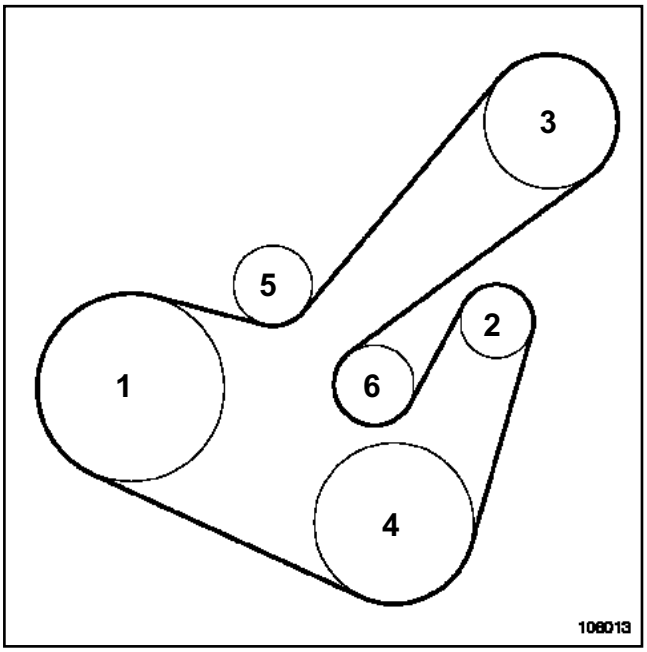

106013

(**1**) Crankshaft

(**2**) Alternator

(**3**) Power assisted steering pump

(**4**) Air conditioning compressor

(**5**) Tension wheel

(**6**) Idler pulley

Engine type	Belt function	Fitting tension (Hertz)
G9T / G9U	Alternator / Power assisted steering pump	AUTOMATIC TENSION WHEEL

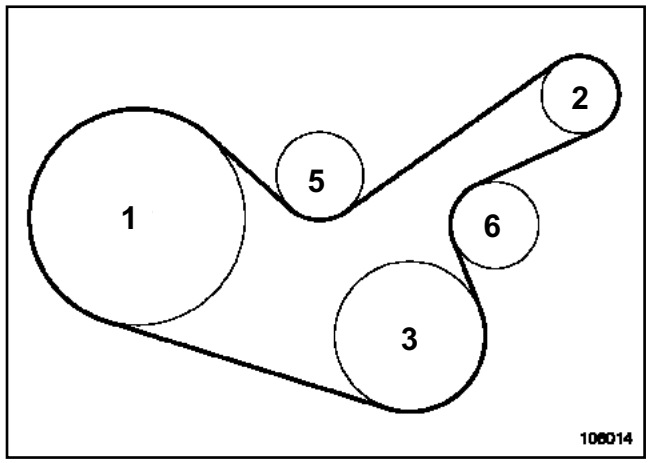

106014

(**1**) Crankshaft

(**2**) Alternator

(**3**) Power assisted steering pump

(**5**) Tension wheel

(**6**) Idler pulley

LXX

Engine type	Belt function	Fitting tension (Hertz)
L7X	Alternator / Power assisted steering pump / Air conditioning compressor	AUTOMATIC TENSION WHEEL

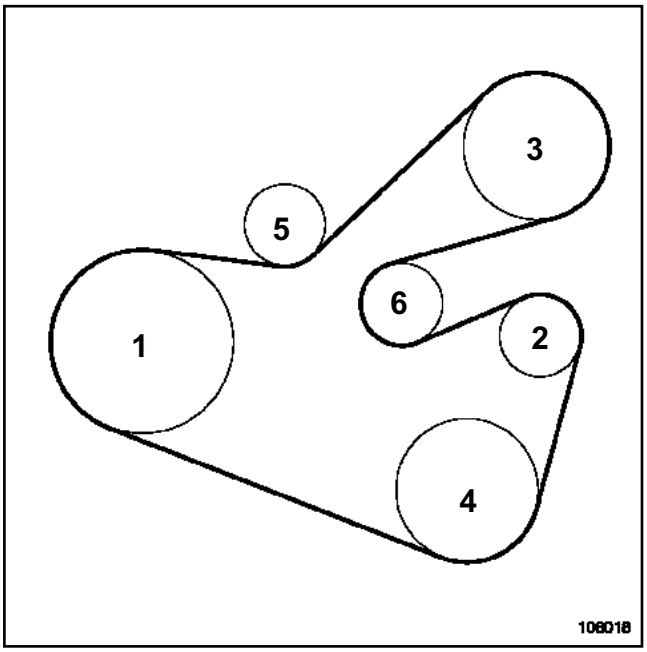

106018

(**1**) Crankshaft

(**2**) Alternator

(**3**) Power assisted steering pump

(**4**) Air conditioning compressor

(**5**) Tension wheel

(**6**) Idler pulley

SXX

Engine type	Belt function	Fitting tension (Hertz)
S8W / S9W	Alternator / Water pump	**289 ± 5**

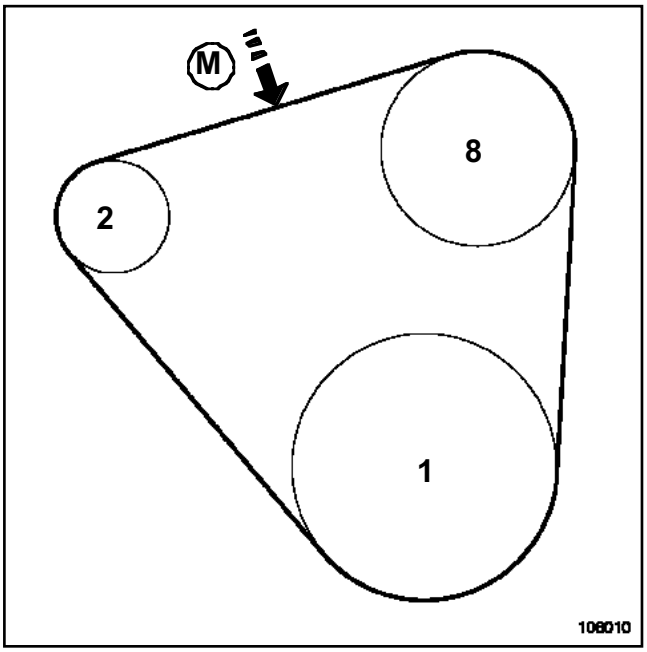

106010

(**1**) Crankshaft

(**2**) Alternator

(**8**) Water pump

(**M**) Measuring point

S9W

Engine type	Belt function	Fitting tension (Hertz)
S9W	Alternator / Water pump	**330 ± 5**

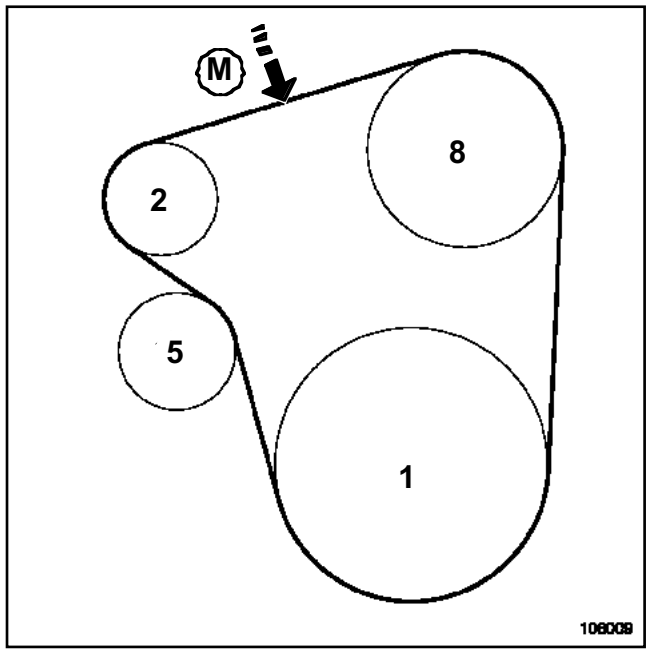

106009

(**1**) Crankshaft

(**2**) Alternator

(**5**) Tension wheel

(**8**) Water pump

(**M**) Measuring point

S9W

Engine type	Belt function	Fitting tension (Hertz)
S9W	Air conditioning compressor	**130 ± 5**

SXX

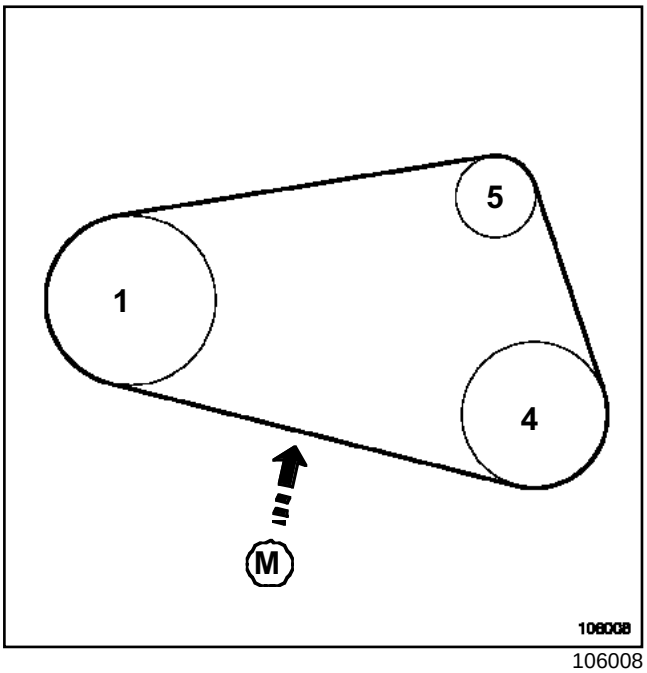

106008

(**1**) Crankshaft

(**4**) Air conditioning compressor

(**5**) Tension wheel

(**M**) Measuring point

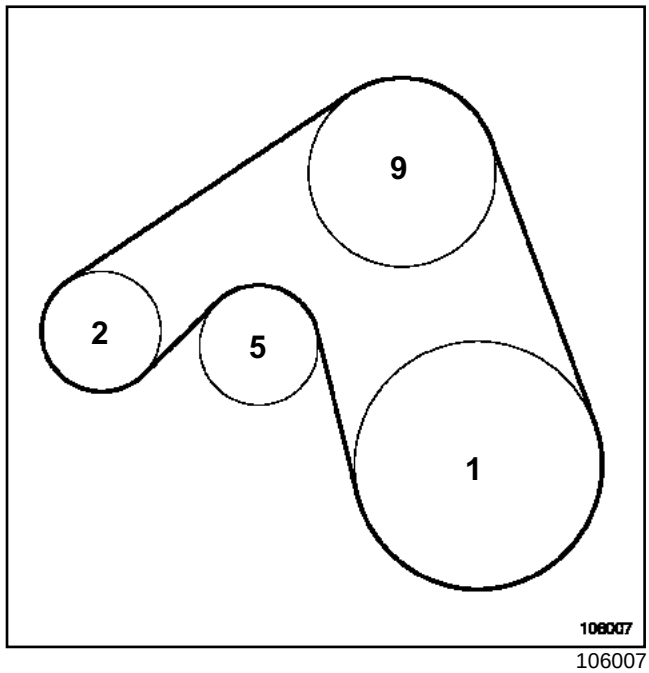

106007

(**1**) Crankshaft

(**2**) Alternator

(**5**) Tension wheel

(**9**) Engine cooling fan

S9W

Engine type	Belt function	Fitting tension (Hertz)
S9W	Alternator / Engine cooling fan	AUTOMATIC TENSION WHEEL

S9W

Engine type	Belt function	Fitting tension (Hertz)
S9W	Air conditioning compressor	**181 ± 5**

Accessories belt: Tension values

SXX

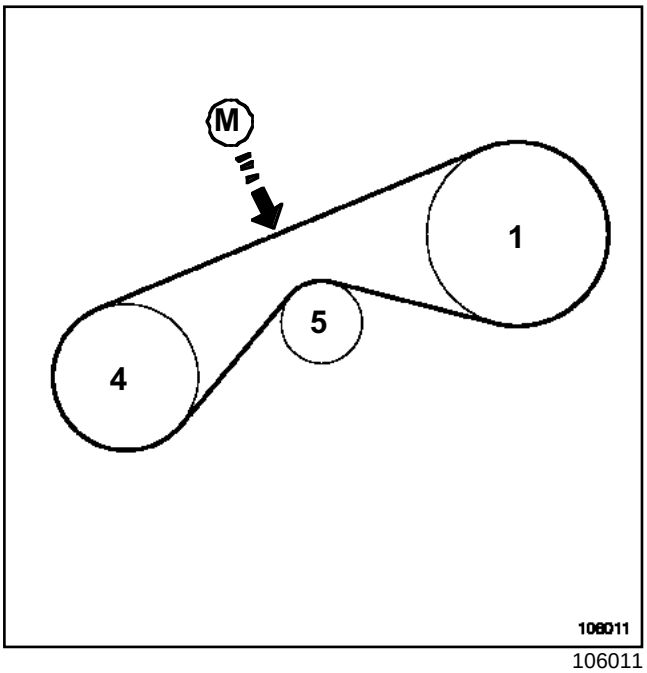

106011

(**1**) Crankshaft

(**4**) Air conditioning compressor

(**5**) Tension wheel

(**M**) Measuring point

PXX

Engine type	Belt function	Fitting tension (Hertz)
P9X	Alternator / Power assisted steering pump / Air conditioning compressor	AUTOMATIC TENSION WHEEL

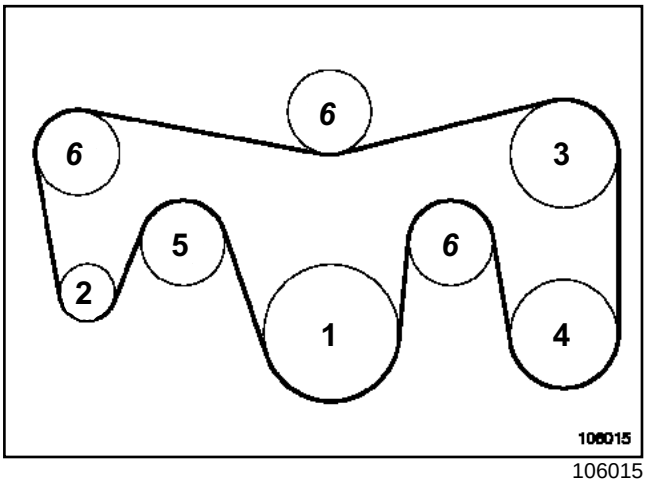

106015

(**1**) Crankshaft

(**2**) Alternator

(**3**) Power assisted steering pump

(**4**) Air conditioning compressor

(**5**) Tension wheel

(**6**) Idler pulley

VXX

Engine type	Belt function	Fitting tension (Hertz)
V4Y	Alternator / Air conditioning compressor	**302 ± 12**

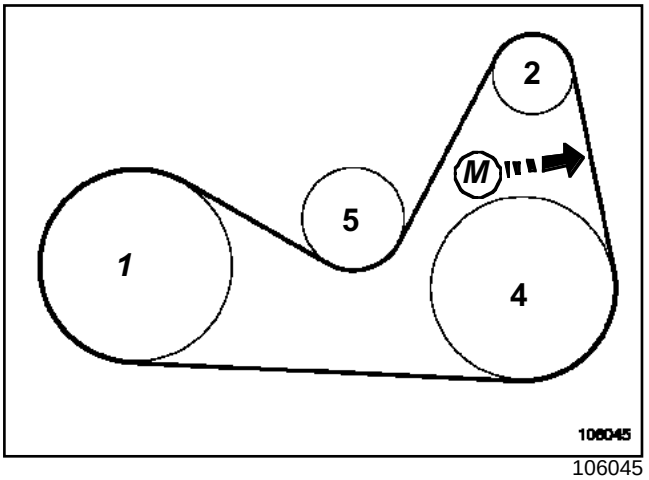

106045

(**1**) Crankshaft

(**2**) Alternator

(**4**) Air conditioning compressor

(**5**) Tension wheel

(**M**) Measuring point

Engine type	Belt function	Fitting tension (Hertz)
V4Y	Power assisted steering pump	**231 ± 12**

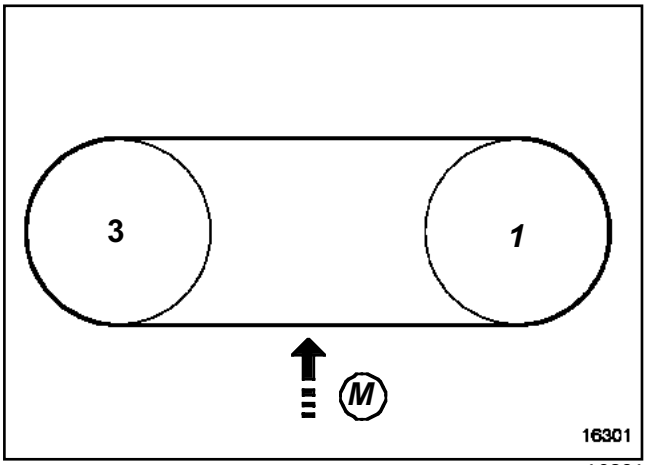

16301

(**1**) Crankshaft

(**3**) Power assisted steering pump

(**M**) Measuring point

ZXX

Engine type	Belt function	Fitting tension (Hertz)
ZD3	Alternator / Power assisted steering pump / Air conditioning compressor or Hydraulic pump / Water pump	AUTOMATIC TENSION WHEEL

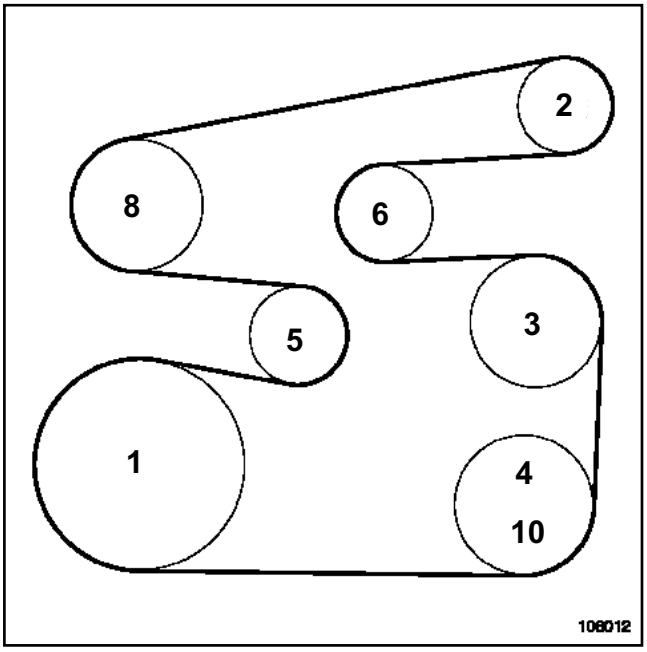

106012

(**1**) Crankshaft

(**2**) Alternator

(**3**) Power assisted steering pump

(**4**) Air conditioning compressor

(**5**) Tension wheel

(**6**) Pulley

(**8**) Water pump

(**10**) Hydraulic pump

	Type	S/Section	
Twingo	XC0 6	12A	17A
Kangoo	XCX X	12A	17A
Clio II	XBX X	12A	17A
Mégane	XAX X	12A	17A
Mégane II	XMX X	12A	17A
Scénic	JAX X	12A	17A
Scénic	JMX X	12A	17A
Laguna	X56 X	12A	17A
Laguna II	XGX X	12A	17A
Avantime	DEX X	12A	17A
Espace III	JEX X	12A	17A
Espace IV	XKX X	12A	17A
Vel Satis	XJX X	12A	17A
Trafic II	XLX X	12A	17A

12A CLEANING THE THROTTLE VALVES

Other subsection concerned: **17A**

- Engine: **XXX**
- Gearbox: **XXX**

Basic manuals:
All Workshop Repair Manuals

Procedure for cleaning the throttle valves when they have been soiled.

Ensure by a visual inspection that the throttle valve is indeed soiled before removing it.

Cleaner to use: part number **77 11 171 437**

"The repair methods given by the manufacturer in this document are based on the technical specifications current when it was prepared.

The methods may be modified as a result of changes introduced by the manufacturer in the production of the various component units and accessories from which his vehicles are constructed."

All copyrights reserved by RENAULT.

Copying or translating, in part or in full, of this document or use of the service part reference numbering system is forbidden without the prior written authority of RENAULT.

© RENAULT 2003

REMOVAL

IMPORTANT
Wear protective glasses and gloves during the operation.
Be sure to work in a clean environment so as not to allow any contamination of the throttle valve.

Disconnect the battery, starting with the negative terminal.

Remove the throttle valve (see chapter **12A, Fuel Mixture, Throttle Valve** in the Workshop Repair Manual of the vehicle in question).

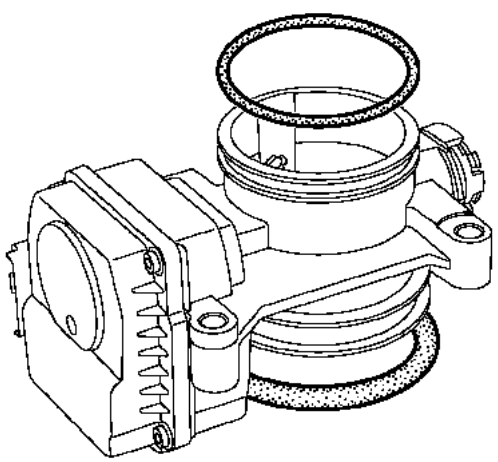

Remove the external O-ring seals from the throttle valve.

Note:
Renault carburettor cleaner (part number: **77 11 171 437**) attacks the seals.

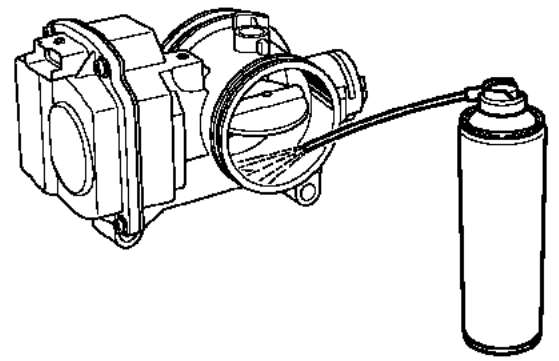

Hold the throttle valve flap open manually.

Spray the cleaner into the cavity of the throttle valve until all traces of soiling have disappeared.

WARNING
Do not allow the cleaner to fall on the spring housing or the connector.

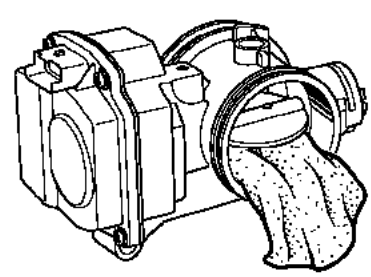

Wipe away cleaner and soil residue with paper.

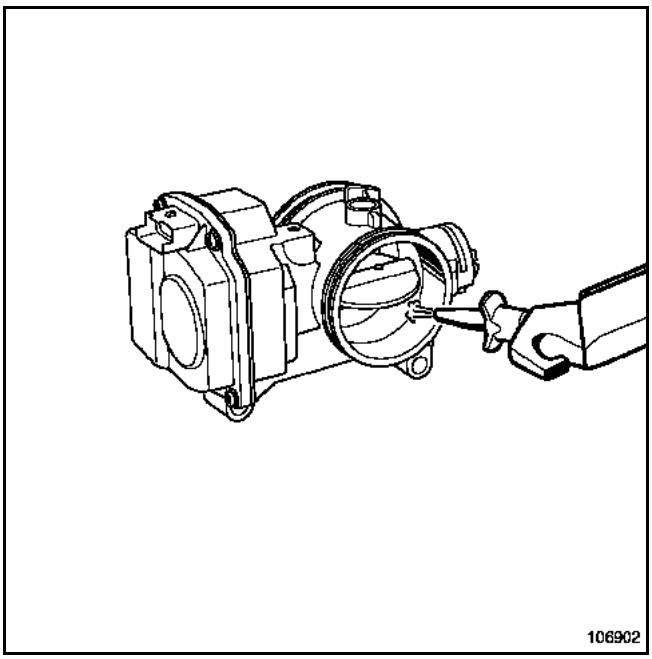

Blow out any paper debris with compressed air from the nozzle. Blow first around the valve, then inside the throttle valve cavity.

Replace the O-ring seals of the throttle valve.

Note:
If the throttle valve is dropped or receives any other impact, it will need to be replaced.

REFITTING

Reinstall the throttle valve (see chapter **12A, Fuel Mixture, Throttle Valve** in the Workshop Repair Manual of the vehicle in question).

WARNING
Connect the battery starting with the positive terminal; perform the necessary programming. (See section **8 entitled Electrical equipment** in the Workshop Repair Manual of the vehicle in question).

MOTORISED THROTTLE VALVE

With the **fault-finding tool** reinitialise the programming of the thrust bearings:
- (for injection systems **S2000** or **Sirius34**) use the erase command **RZ008 "Reinitialise programming"**.
- (for injection systems **S3000**) use the erase command **RZ005 "Programming"**.

When the ignition is switched on, the throttle valve should go through a cycle of programming the MINI and MAXI throttle stop positions.

Using the **fault-finding tool**, check that the programming has been carried out correctly:
- (for injection systems **S2000** or **Sirius34**) message title **"Programming Throttle Stops" ET111**.
- (for injection systems **S3000**) message title **"Programming Throttle Stops" ET051**.

RENAULT

Technical Note 3863A

TTY

Electrical recommendations

All types

Basic manuals: All Workshop Repair Manuals

Sub-sections concerned: All

Definition of the electrical recommendations to apply when the repair procedure in the Workshop Repair Manual is not detailed enough.

Edition 2

77 11 332 182 **MARCH 2005** **Edition Anglaise**

"The repair methods given by the manufacturer in this document are based on the technical specifications current when it was prepared.

The methods may be modified as a result of changes introduced by the manufacturer in the production of the various component units and accessories from which his vehicles are constructed."

All copyrights reserved by Renault.

The reproduction or translation in part of whole of the present document, as well as the use of the spare parts reference numbering system, are prohibited without the prior written consent of Renault.

© Renault s.a.s. 2005

Electrical recommendations

Contents

01D **MECHANICAL INTRODUCTION**

Vehicle: Electrical recommendations 01D-1

ELECTRICAL RECOMMENDATIONS

DIn the Workshop Repair Manuals, the user is sometimes confronted with imprecise data (for example, check for resistance of approximately**850 Ω** or check the continuity) without instructions as to how this is done. Whereas the content of the procedures remains the rule primarily to be respected , the aim of this document is to define some simple rules to be applied solely when the procedures are insufficiently precise.

1 - Fault finding problem

Disconnecting the connectors and/or manipulating the wiring harness may temporarily remove the cause of a fault.

2 - Defined rules

The aim of these rules is to define a tolerance for multimeter checks.

a - Tolerances for resistors

> Note:
>
> This rule only applies if a reference value does not have an associated tolerance in the Workshop Repair Manual.

For a fixed or variable resistor, the tolerance is ± **20%**. Replace the component if it is outside the tolerance values.

Example in the case of a fixed resistor:

- the engine speed sensor resistance is **1000 Ω**,
- the resistance reading should be within the tolerance range of **800 Ω** < R >**1200 Ω**.

Example in the case of a variable resistor:

- The resistance of the exterior temperature sensor (resistance varies as a function of temperature),
- The sensor value is between **0°C** and**5°C**, corresponding to between **5400 Ω** and **6200 Ω**,
- the value read should be within the tolerance range of **4300 Ω** < R >**7440 Ω**.

b - Checking for the continuity of wires and interfering resistance:

> Note:
>
> This rule only applies if a reference value does not have an associated tolerance in the Workshop Repair Manual.

This check shall be made on the entire line, then section by section.

When checking wiring: disconnect the components.

Maximum resistance: **5 ± 5 Ω**.

> **WARNING**
>
> Do not use the multimeter « beep » function.

c - Checking the wiring insulation

> Note:
>
> This rule only applies if no recommendation is made in the Workshop Repair Manual.

At the moment, an insulation check cannot be the subject of a general rule without the risk of damaging a computer, for instance.

Disconnected components: infinite resistance between:

- earth and other wires,
- supply and other wires.

> Note:
>
> In the case of a multiplex network:
>
> - follow the multiplex network fault finding (multiplex network out of service) in the **88A, Wiring harness** section of the Workshop Repair Manual for the vehicle.

d - Checking the supply voltage

> Note:
>
> This rule only applies if no recommendation is made in the Workshop Repair Manual.

The supply voltage is checked as a function of the cable cross-section.

Section	Sensor
> or = **35 mm²**	Nominal voltage U **-15%** < value < nominal voltage U

Note:

The cross-section of the wire is specified in the wiring diagram in the Wiring Diagrams Technical Note.

e - Checking the condition of the wiring

Note:

This rule only applies if no recommendation is made in the Workshop Repair Manual.

Check that the sheathing is not damaged and that the wiring has not been pinched, crushed or stripped.

Meticulously inspect the protective devices, insulation and path of the wiring harnesses.

Look for signs of oxidation.

If the wire is rigid, it has probably overheated: the wire must be replaced.

f - Checking the condition of a connector

Note:

This rule only applies if no recommendation is made in the Workshop Repair Manual.

To check a connector, disconnect it and check the appearance of the clips and tabs as well as their crimping (no crimping on the insulating part).

Check that the clips and tabs are properly locked in the sockets.

Check that no clips or tabs have been dislodged during connection.

Check that the terminals have not oxidised as a result of poor sealing of the joints or the connector itself.

Check the continuity within the connector:

- 1. Push the connector in as far as possible,

- 2. Pull the connector out halfway,

- 3. Check the continuity.

If there is discontinuity, the connector is considered to be defective.

g - Repairing a wiring harness

Note:

This rule only applies if no recommendation is made in the Workshop Repair Manual.

There are currently two possible cases:

- In the case of a multiplex network:

  • A Technical Note specifies the conditions for completing this operation (currently being prepared).

- In the case of an airbag wiring harness:

  • It is not permitted to repair an airbag wiring harness except where specified in an « OTS » or « Technical Note ».

RENAULT

Technical Note 3864A

XXXX

Subsection concerned: 01B

Using the Wiring Diagrams

Technical Note 3864A is an explanatory note for the use of wiring diagrams on CD-ROM (Visu Schéma). The Technical Note helps in understanding how Visu Schéma works and gives help in navigating and searching Visu Schéma.

77 11 332 202 **JUNE 2004** **EDITION ANGLAISE**

"The repair methods given by the Manufacturer in this document are based on the technical specifications current when it was prepared.

The methods may be modified as a result of changes introduced by the manufacturer in the production of the various component units and accessories from which their vehicles are constructed."

All copyrights reserved by RENAULT.

Copying or translating, in part or in full, of this document or use of the service part reference numbering system is forbidden without the prior written authority of RENAULT.

© RENAULT 2004

The Wiring Diagrams Technical Notes allow selection of the Applied Principle Diagram.

Marked by: corresponding to a defective function.

Each diagram is marked according to the identification of the vehicle concerned, i.e.:

- the vehicle family (for instance, J64),
- the engine as described on the engine plate and the engine suffix (e.g. E7J 764),
- the date the vehicle was manufactured. On every Wiring Diagrams Technical Note there is a FROM WHICH date which determines the production cut-off of the vehicles for which the Technical Note is valid,
- more generally, the vehicle criteria (for example, left-hand drive, air conditioning).

A **Quick Guide to Visu Schéma** gives some tips on how to use the Visu Schéma software.

There will be little, or no, documentation on paper from 2004.

1. STRUCTURE OF THE TECHNICAL NOTE

1.1 The index of functions

This index allows the user to find the title of the corresponding function quickly from the number of a circuit diagram. The index is listed in numerical order of the diagrams.

1.2 The diagrams

The diagrams section gathers together all the Applied Principle Diagrams.

The Applied Principle Diagrams show in detail the internals of simple components (switch, relay) and thus aid understanding of the operation of the system and the fault finding routines. Here you will find:

- the components labelled with a number,
- the connectors, labelled with a letter followed by a number (R107),
- the earths, labelled with a letter followed by a number or a letter (e.g. M4 or MG).

The Applied Principle Diagrams are complemented by:

- the functions of the conductors on each connector (see),
- the wiring routing, which allows the user to find the components on the vehicle,
- lists of criteria, components, junctions, earths, connections, allowing easy identification of all the components on the diagrams.

Since version 2, it has been possible to print the diagrams directly to A3 format or to two A4 sheets, in colour or black and white.

1.3 Fuse and relay boxes

The boxes section illustrates and describes in detail the various fuse and relay boxes on the vehicle. The following are described for each vehicle:

- a graphical representation of the front and/or rear of the box,
- a list of fuses, their use, their position, their rating.

1.4 Earth location diagrams

The earth locations diagrams show and identify the location of the earthing points present on the vehicle.

1.5 Lists of parts

The lists of parts list and describe all the connectors used in the vehicle wiring harnesses. Each list of parts gives:

- a graphical representation of the connector (the representation may be simplified), and the assignment to the pinouts in the connector,
- the list of conductors connected to the connector with their allocation to the pinouts,
- the cross-section of each conductor,
- the function of each conductor.

There is one list of parts per connector. The connectors are indexed in the lists provided on each Wiring Diagrams Technical Note.

Conductor colours

- The basic electrical states are:

Red	+ 12 volts before ignition
Yellow	+ 12 volts after ignition
Blue	monitoring circuit or identifiers
Black	free earth

- The following colours are used for the other conductors and the other connectors: white, blue, beige, clear, grey, yellow, brown, black, orange, red, salmon pink, green, violet. These colours may vary for the same wiring harness depending on the supplier.

BA	White	**JA**	Yellow	**RG**	Red
BE	Blue	**MA**	Brown	**SA**	Salmon pink
BJ	Beige	**NO**	Black	**VE**	Green
CY	Clear or White	**OR**	Orange	**VI**	Violet
GR	Grey				

- + starter, intermittent earths, polarity inversions are not fundamental electrical states.
- Protective devices (fuses and thermal cut-outs) do not change the electrical state of the conductors.
- Wiring supplied with devices does not always follow these rules.

1.6 Wiring routing

- The wiring routings identify the location on the vehicle of devices, connectors and wiring routing points.
- In the wiring routing, the letter N indicates the label identifying the wiring.

IMPORTANT
The wiring routing points may be slightly modified and may vary from one vehicle to the next. Always check the correctness of the routing before any work on the vehicle or before any operation liable to cause damage to the wiring.

1.7 The lists

- List of links: for identifying the function of a conductor from its code.
- List of components: for identifying a component on a diagram from its code.
- List of earths: for identifying an earth on a diagram from its code.
- List of connections: for identifying a connector on a diagram from its code.
- List of criteria: for identifying a criterion on a diagram from its abbreviation. The list explains the meaning in non-abbreviated terms.

1.8 On-line help

On-line help assists in understanding the use of the Visu Wiring Diagram Technical Notes and is a complement to the CBT.

2. USING THE TECHNICAL NOTE

2.1 How to read an Applied Principle Diagrams:

(a sample diagram is shown on the following page)

1	Vehicle family.
2	Criteria for the selection of the diagram.
3	Current year
4	Colour of the connector or the module if it is a module socket.
5	Representation of the connector (number of tracks marked on the front or rear of the connector).
6	Representation of the connection (square for a male connector and round for a female connector). The connection will have a foolproofing device, and the colour is not necessarily the same for the male and female parts.
7	Colour of the connection or the module socket.
8	Number of the board to which the device is connected.
9	Standardised device number
10	Fuse rating.
11	Position of the fuse on the board.

12	Colour of the module socket.
13	Number of the connection.
14	Name of the splice not located in the wiring routing.
15	Earth name (M for earth and N for neutral).
16	Secondary device.
17	Section number.
18	Sheet number.
19	Representation of a link.
20	Link code (for identifying the function of a conductor), see the list of links.
21	Pinout number.
22	Representation of a twisted conductor.
23	Representation of a shield.

Note:
The secondary device, in this diagram, supplies the signal to the computer which controls the relay. Refer to the corresponding diagram for details of the link between the device and the computer.

Definition of selection criteria:
A characteristic of the criteria field is that a combination of criteria is permitted:
- The **/** (forward slash) represents **OR**.
- The **,** (comma) represents **AND**.
- **S** or **SS** as the first letter(s) of a criterion mean **WITHOUT** or **WITH**.

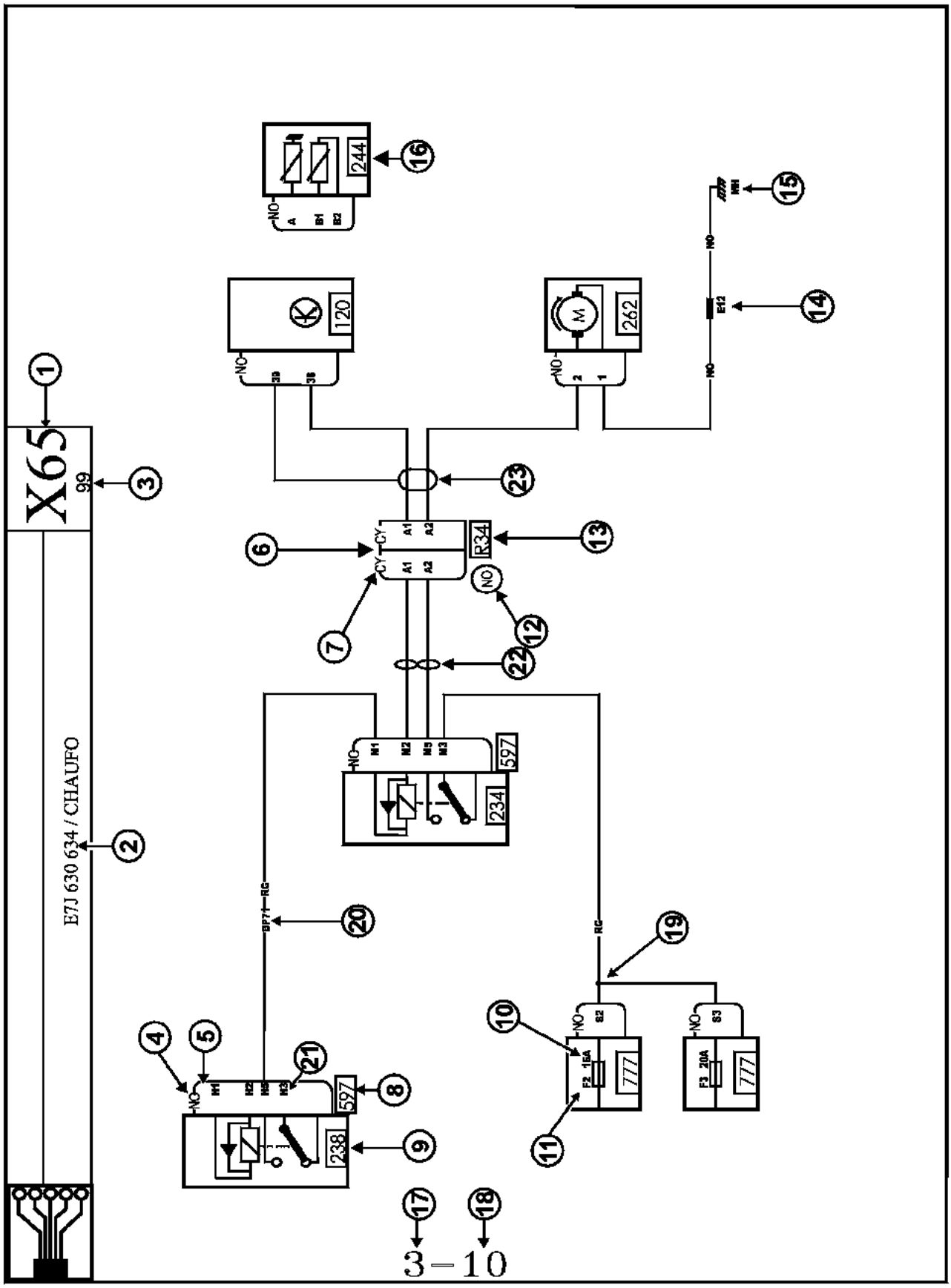
X65
99
E7J 630 634 / CHAUFO
244
120
262
E12
R34
597
234
238
F2 15A
F3 20A
777
3-10

2.2 How to read a list of parts
(a sample list of parts is shown on the following page)

1	Symbol for list of parts sheets.
2	Connector description.
3	Wiring harness description.
4	General wiring harness criterion.
5	Particular criterion for the connector.
6	Number of the wiring harness where the connector may be found.
7	Connection coding (only for manufacture).
8	Number of the device.
9	Colour of the connector or the module.
10	Graphical representation of the connector (seen from the rear).
11	Pinout number used inscribed on the unit.
12	Cross-section of the conductor connected to this pin.
13	Link code of connector (for identifying the function of a conductor), see the list of links.
14	Description of the function of the conductor.
15	The cross indicates the presence of a wire in a pin, two crosses = two wires. In the new lists of parts, only the colours of conductors with a fundamental state are shown (red, yellow, black, blue). **A cross in the pin indicates the presence of a conductor of a different colour.**

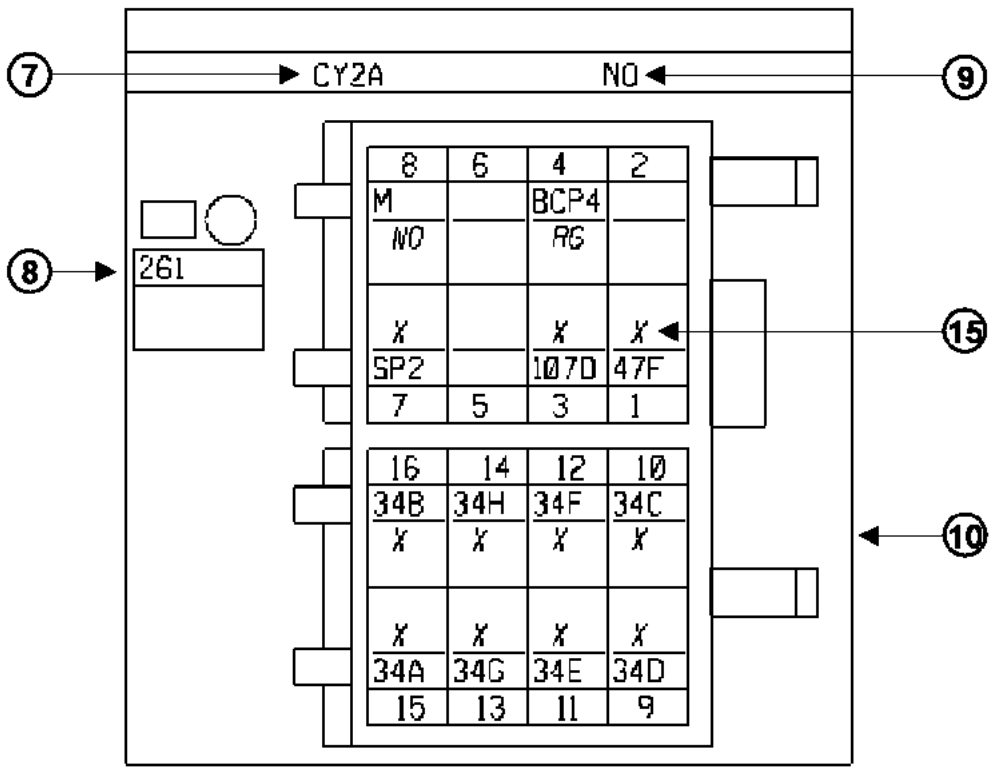
7
CY2A
NO
9
8
261
8 6 4 2
M
NO
BCP4
RG
X X X
SP2
107D
47F
7 5 3 1
15
16 14 12 10
34B 34H 34F 34C
X X X X
X X X X
34A 34G 34E 34D
15 13 11 9
10

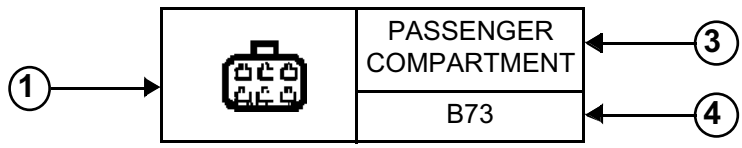

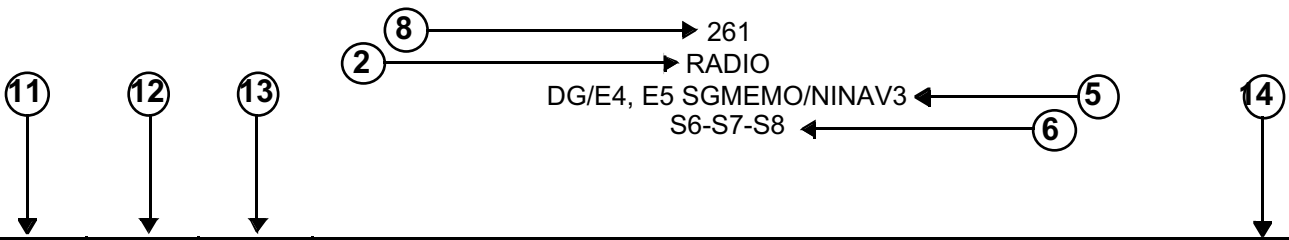

No.	mm^2	∿	... → ...
1	0.35	47F	VEHICLE SPEED SIGNAL
3	0.35	107D	RADIO CUT-OFF MOBILE PHONE SIGNAL
4	1.0	BCP4	MEMORY FUSE PROTECTED SHORT-CIRCUIT + BATTERY FEED
7	1.0	SP2	PROTECTED + ACCESSORIES > RADIO
8	2.5	M	EARTH
9	1.0	34D	REAR RIGHT LOUDSPEAKER + SIGNAL
10	1.0	34C	REAR RIGHT LOUDSPEAKER - SIGNAL
11	1.0	34E	FRONT RIGHT LOUDSPEAKER + SIGNAL
12	1.0	34F	FRONT RIGHT LOUDSPEAKER - SIGNAL
13	1.0	34G	FRONT LEFT LOUDSPEAKER + SIGNAL
14	1.0	34H	FRONT LEFT LOUDSPEAKER - SIGNAL
15	1.0	34A	REAR LEFT LOUDSPEAKER + SIGNAL
16	1.0	34B	REAR LEFT LOUDSPEAKER - SIGNAL

3. WIRING ROUTING

Example of wiring routing associated with component 597 of the previous wiring diagram.

In Visu Schéma, click on the icon to obtain a list of wiring routings available as a function of the component selected.
Refer to the index of connectors and index of joints in the paper documentation for a list of wiring routings.

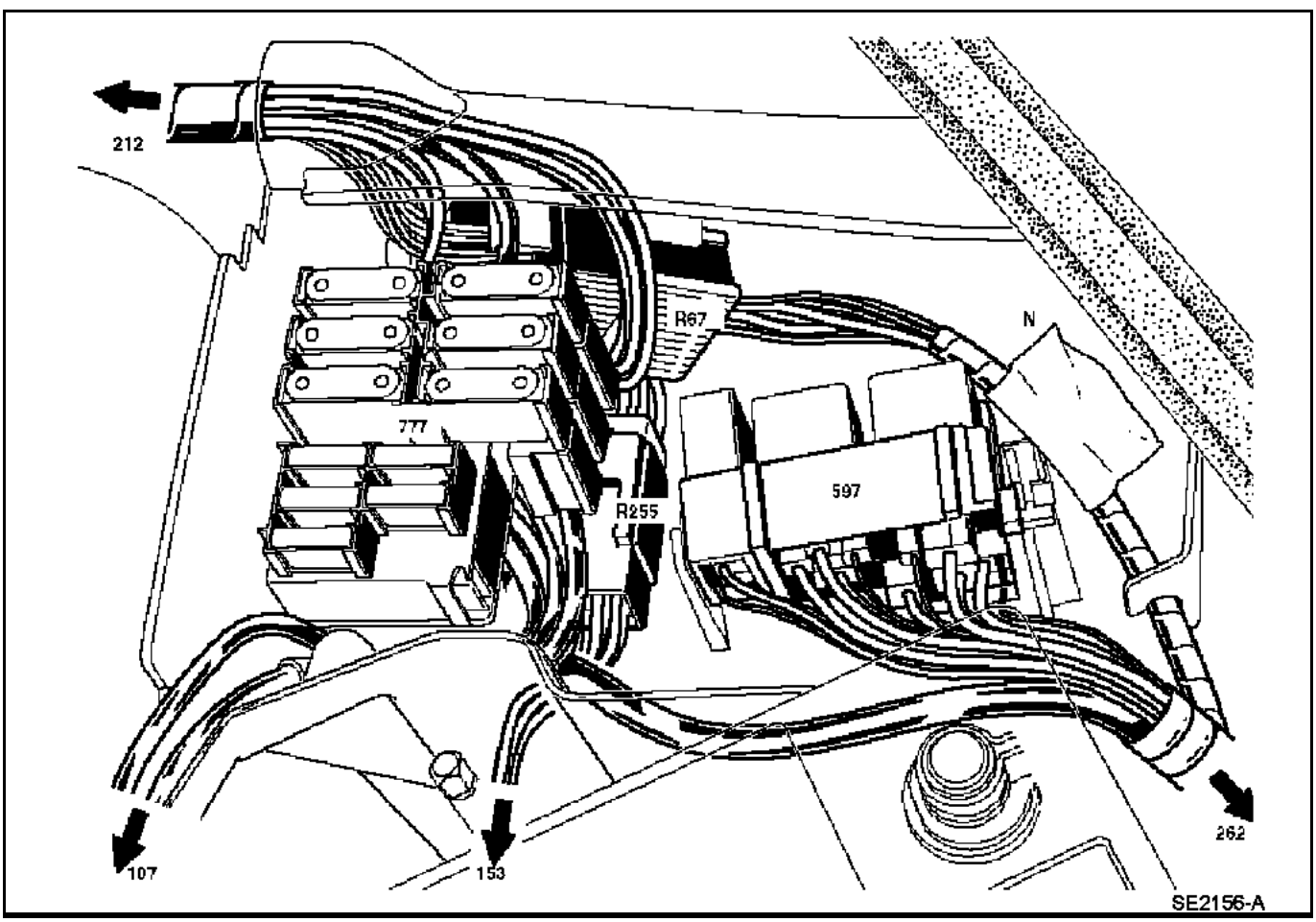

4. CORRESPONDENCE BETWEEN VISU SYMBOL AND WIRING DIAGRAM TECHNICAL NOTE SECTION

	Function index	Section 1
	Diagrams	Section 3
	Fuse boxes and fuses	Section 4
	Earth location diagram	Section 5
	Lists of parts	Section 7
	Wiring routings	Section 8

5. NOTE FOR USERS OF THE PAPER DOCUMENTATION

The moving tab is an aide-mémoire, specific to this NT, which allows the user to go directly to the connector and wiring routing pages without having to refer to the lists of parts. The moving tab lists the numbers of the components and the connections, the numbers of the connector and wiring routing sheets.

Note:
The tab is valid only for the note for which it is issued. It is updated for each issue.

RENAULT

Technical Note 3867A

XXXX

Subsection concerned: 09A

Shock absorber noise fault finding

Fault finding on gurgling, banging, knocking and grating of shock absorbers.

77 11 332 262 **APRIL 2004** **EDITION ANGLAISE**

"The repair methods given by the Manufacturer in this document are based on the technical specifications current when it was prepared.

The methods may be modified as a result of changes introduced by the Manufacturer in the production of the various component units and accessories from which his vehicles are constructed."

All copyrights reserved by RENAULT.

Copying or translating, in part or in full, of this document or use of the service part reference numbering system is forbidden without the prior written authority of RENAULT.

© RENAULT 2004

FOREWORD

1 - Replacing each shock absorber must be justified by the fault finding attached.

2 - Noises heard when descending a pavement ("Cannon shot") are linked to the shock absorber definition:

The shock absorber is compliant: do not replace the shock absorbers.

3 - Hissing noises (normal hydraulic noise of shock absorber) or cracking (micro-displacement of the tightened rear brake pads) caused when passengers get into or out of the vehicle are never linked to a shock absorber fault. Confirm the customer complaint in the same conditions **without tightening** the parking brake:

If the noise has disappeared, the shock absorber is not to blame.

4 - Noises heard during parking manoeuvres are never due to the shock absorber ->

Do not replace the shock absorbers.

5 - Before replacing any shock absorbers due to gurgling, make sure that the noise does not come from the end rubber pad, the stabiliser bar tie rods (and other ball joints) or shock absorber turret rubber mountings + check tightness of the turret and the shock absorber axle.

BEFORE WORK

➡ Ask the customer for information regarding the conditions in which the noise occurs as soon as the Repair Order is issued.

Description	Gurgling	Banging/Knocking	Grating
Noise similar to tapping on a small drum - beat caused by internal valves in the shock absorber	X		
Burst of small dry banging noises similar to metal impacts		X	
Noise caused by contact between a metal part and a rubber part			X
Noise appearing on a bad road or deformed road at low speed (**6-19 mph (10-30 km/h)**).	X	X	X

➡ Before any road tests, check the tightening and clearance of the shock absorber front and rear axle mountings, linkage, ball joints and bearing clearances.

GURGLING from shock absorbers

Origin: Noise caused by shock absorber piston valves reversing their direction.

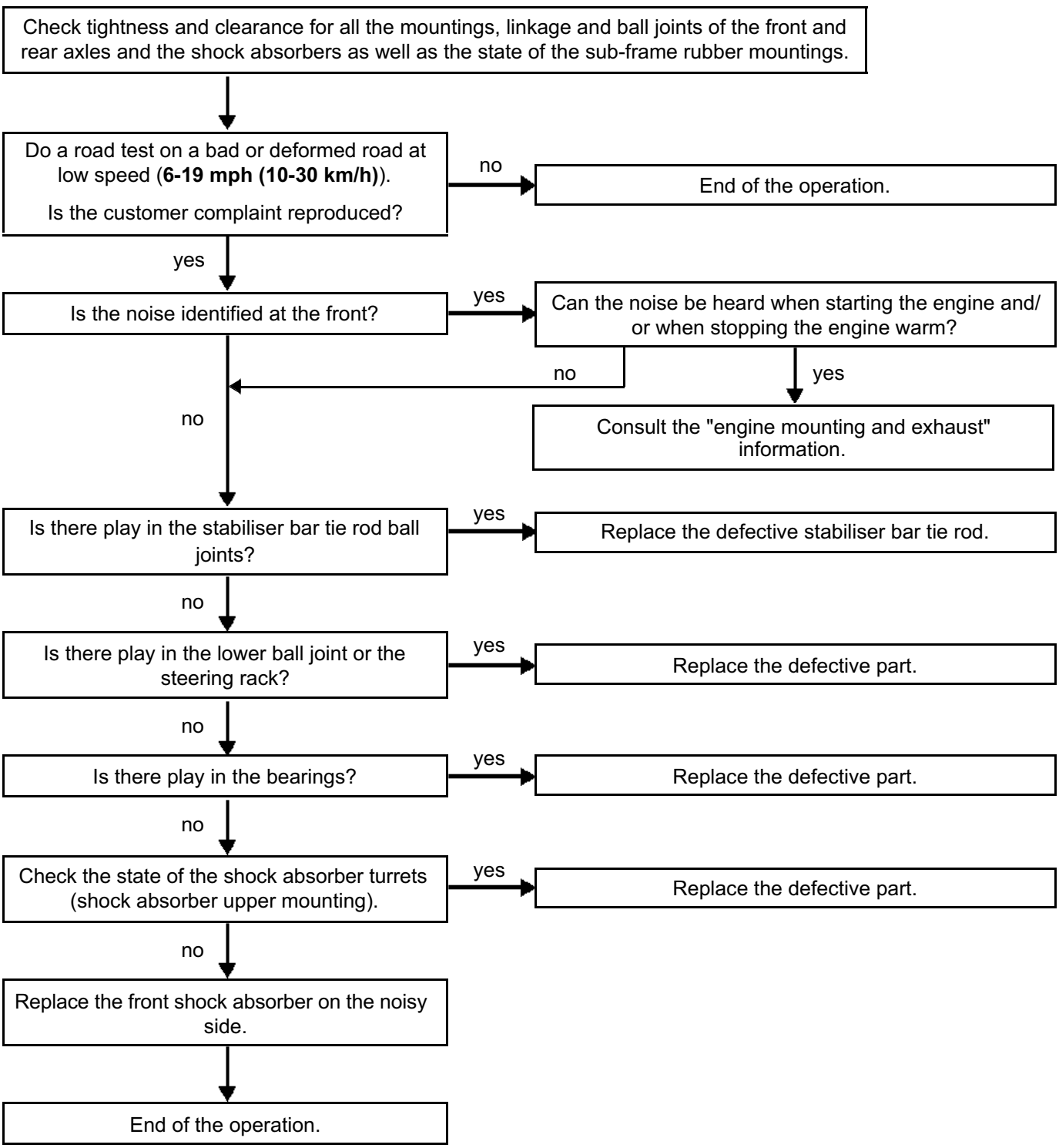

BANGING/KNOCKING from shock absorbers

Origin: Noise caused by a faulty component or incorrect assembly of the suspension.

Check tightness and clearance for all the mountings, linkage and ball joints from the front and rear axles and the shock absorbers as well as the state of the sub-frame rubber mountings.

↓

Make sure that the spring is correctly positioned in upper and lower parts:

Is the spring positioned correctly?

- no → Reposition the spring.
- yes ↓

Are the stabiliser bar mountings and bearings in good condition?

- no → Replace the faulty bearings or mountings.
- yes ↓

Do a road test on a bad or deformed road at low speed (**6-19 mph (10-30 km/h)**).

Is the customer complaint reproduced?

- no → End of the operation.
- yes ↓

Is the noise identified at the front?

- yes → Can the noise also be heard when the rear axle passes over a vehicle retarder?
  - no → ↓
  - yes → Consult the "engine mounting and exhaust" information.
- no ↓

Is there play in the lower ball joint or the steering rack?

- yes → Replace the defective part.
- no ↓

Is there play in the bearings?

- yes → Replace the defective part or carry out necessary adjustments.
- ↓

Check the state of the shock absorber turrets (shock absorber upper mounting).

- not OK → Replace the defective part or carry out necessary adjustments.
- OK ↓

Replace the front shock absorber on the noisy side.

↓

End of the operation.

GRATING of shock absorbers

Origin: Noise caused by contact between a metallic part and a rubber part.

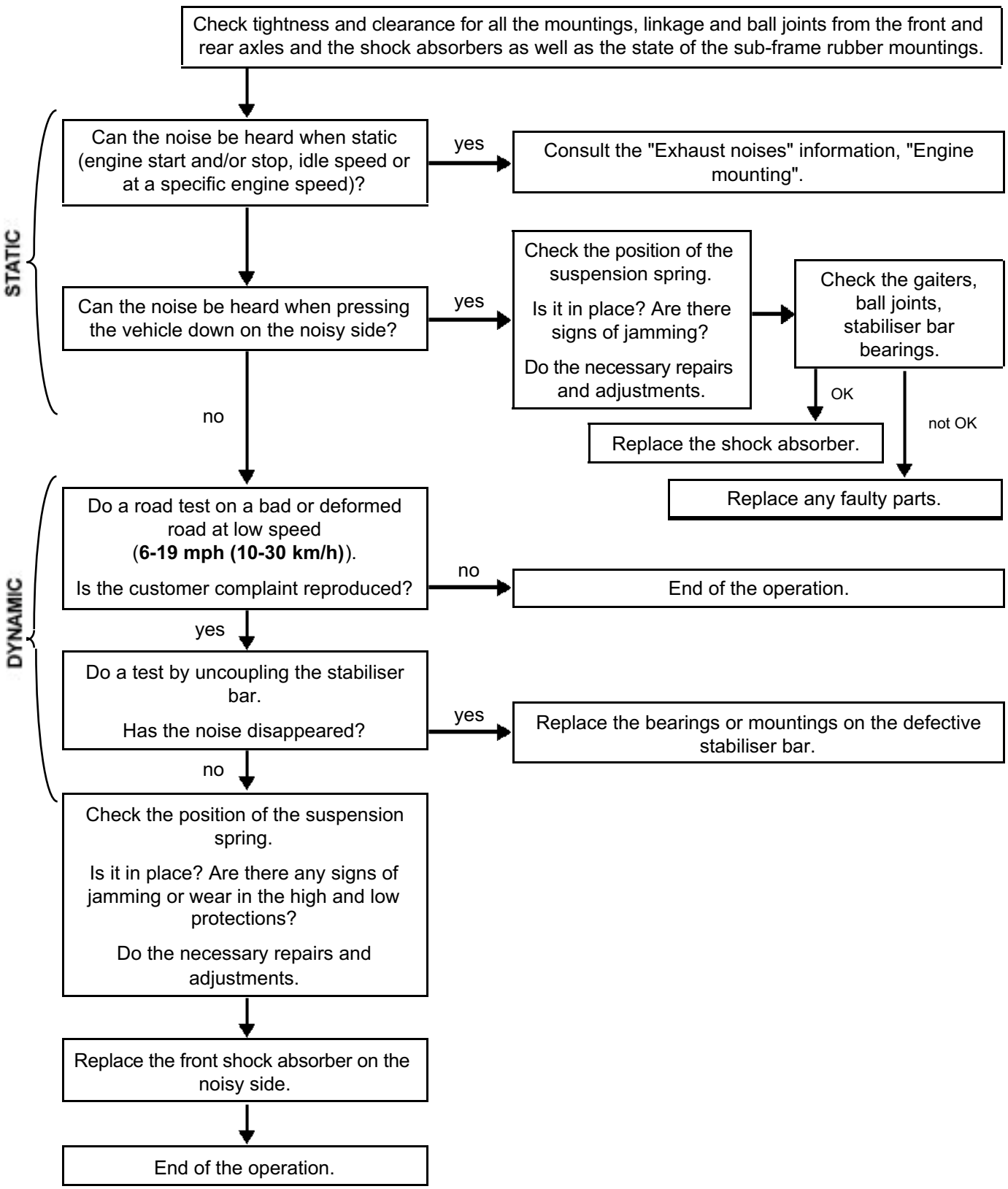

	Type	S/Section
Mégane II	**XMX X**	**12B**
Scénic II	**JMX X**	**12B**
Laguna II	**XGX X**	**12B**
Vel Satis	**BJX X**	**12B**
Espace III	**JEX X**	**12B**
Espace IV	**JKX X**	**12B**

12B TURBOCHARGER

Other sub-sections concerned: **10A** **11A**

- Engines: **XXX**
- Gearbox: **XXX**

Basic manual:
Technical Note **3398A - 3767A - 3816A**
Workshop Repair Manual **353 - 361**

Evolution of the turbocharger mounting nut tightening torque

Tightening torque	
turbocharger mounting nut	**1.5 daNm + 75° ± 6°**

"The repair methods given by the manufacturer in this document are based on the technical specifications current when it was prepared.

The methods may be modified as a result of changes introduced by the manufacturer in the production of the various component units and accessories from which his vehicles are constructed."

All copyrights reserved by RENAULT.

Copying or translating, in part or in full, of this document or use of the service part reference numbering system is forbidden without the prior written authority of RENAULT.

© RENAULT 2004

RENAULT

Technical Note 3876A

Sub-section concerned: 13B

Vehicle	*Type*	*Engine*	*Basic manuals*
Kangoo	XCXX	K9K, F9Q	MR 381
Clio II	XBXX	K9K	Technical Note 3674A
Mégane II	XMXX	F9Q, K9K	MR 366
Laguna II	XGXX	F9Q, G9T	Technical Note 3673A - Technical Note 3674A
Espace IV	JK0X	G9T, P9X	MR 363
Vel Satis	XJXX	G9T, P9X	MR 355
Modus	XPXX	K9K	MR 387

FAULT FINDING

GENERIC OBD DIESEL

General operation of the toxic fume filter system on diesel engines (OBD) for all vehicles produced from 1st January 2003.

77 11 332 622 Edition 2 - NOVEMBER 2004 EDITION ANGLAISE

"The repair procedures given by the Manufacturer in this document are based on the technical specifications current when it was prepared.

The procedures may be modified as a result of changes introduced by the manufacturer in the production of the various component units and accessories from which their vehicles are constructed."

All copyrights reserved by RENAULT.

Copying or translating, in part or in full, of this document or use of the service part reference numbering system is prohibited without the prior written authority of RENAULT.

© Renault s.a.s. 2004

INTRODUCTION

OBD SYSTEM

1. PRINCIPLE 3
2. DEFINITIONS 4
2.1 Driving 4
2.2 Warm up 4
3. OBD WARNING LIGHT OPERATING PRINCIPLE 5
3.1 Appearance 5
3.2 Disappearance 5

COMPONENTS MONITORED BY OBD SYSTEM

1. FUEL CIRCUIT 6
2. AIR CIRCUIT 6
3. EXHAUST 6
4. OTHER COMPONENTS 6

FAULT FINDING AND REPAIR PROCEDURES

1. USUAL PROCEDURE 7
2. OBD IN THE FAULT FINDING PROCEDURE 7
3. DIAGNOSTIC TOOL: CLIP 7

PRECAUTIONS AND PROCEDURES TO FOLLOW AFTER REPAIR

1. RESETTING THE OBD SYSTEM 8
2. PROCEDURES TO FOLLOW AFTER REPLACING THE COMPONENT 8
– Replacing the particle filter 8
– Replacing the EGR valve. 8
– Replacing the air swirl flap 9
– Replacing at least 2 injectors 9

On the 13th October 1998, the European Union adopted a measure to introduce a European diagnostic system (EOBD: European On Board Diagnostic) in European Union Member states (some non-European countries have adopted this EOBD system too, Mexico, for example).

This regulation has been in force for petrol engine models since 1st January 2000.

Since the 1stJanuary 2004, all diesel vehicles registered for the first time, must be fitted with the EOBD system.

The system generally has:
- a standardised toxic fume filter system warning light (OBD "orange" warning light),
- a standardised diagnostic interface (the diagnostic socket currently used for fault finding on RENAULT vehicles),
- a protocol for standardised data.

The OBD warning light indicates faults that relate to toxic emissions diagnosed by the EOBD. When this warning light comes on, the vehicle's owner must visit the workshop as soon as possible. An odometer records the mileage covered with the OBD light lit.

The term "ScanTool" refers to diagnostic tools that can support OBD fault checks.

The codes found by the tools are in accordance with the international OBD standards, and cover all the vehicle components that influence system pollution. With this tool, you can read the OBD fault codes for all vehicle marques.

In some European countries, the OBD system can be used in technical checks to test the level of pollution of each vehicle (this is already the case for petrol vehicles). The ScanTool is made by numerous manufacturers and there is no law in place ruling the use of one specific brand supplier.

In the RENAULT network, CLIP is the designated diagnostic tool and should be used for all vehicle marques.

1. Principle

The OBD system enables:

– The OBD system to be active throughout the service life of the vehicle. The driver is warned that an operational fault has occurred that has led to the pollution threshold being exceeded, (OBD warning light, see previous page) or when a component fault is present.

– The computers can detect abnormalities that cause pollutant gas emissions (measured in standardised cycles) above the OBD thresholds. They have specific diagnostic programming for component pollution control.

System operating principle:

– the electrical fault finding procedures are carried out continuously,
– the diagnostic for component pollution control is tested once when the vehicle is driven (see definition).
The engine must be operating under certain conditions in order for it to work:
- coolant temperature conditions,
- vehicle speed conditions,
- delay after starting,
- engine parameters (inlet manifold vacuum, vehicle speed, gas flow, etc.).

IMPORTANT
On some vehicles, fault finding is carried out both during driving or when the vehicle is stationary.
Always refer to the MR for each vehicle type.

2. Definitions

2.1 Driving

A drive is calculated based on the following three conditions being met:
- starting the engine,
- phase during which the selected fault finding procedure is run (this depends on the use),
- switching the ignition off.

2.2 Warm up

A warm-up (warming up the engine) is detected when the two following conditions are met:

- the coolant temperature has to have increased by **22°C** compared to the coolant temperature when the engine was started,
- the coolant temperature must have gone beyond the minimum threshold (**70°C**).

An **odometer** records the mileage covered with the OBD light lit. It resets:

- if the fault memory is cleared after the fault has been eliminated,
- if the fault does not recur during the next 40 warm ups, the fault code will be cleared,
- if the lit OBD warning light goes off after 4 fault finding procedures without any faults being displayed, it is reactivated by the appearance of a new fault,
- when a new fault appears when the light has been turned off beforehand.

If the fault does not recur during 40 warm ups, the following information is deleted from the computer's memory:

- its fault code,
- the "FAULT DISPLAY CONTEXT",
- the odometer.

3. OBD warning light operating principle

3.1 Appearance

If the computer detects a recognised identical fault over a number of **consecutive drives** then:
- an OBD fault is stored,
- illumination of the OBD warning light is requested if the fault in question has to turn on the warning light based on the interpretation of the regulations.

A collection of engine parameters is stored the moment that the fault is detected.

3.2 Disappearance

To turn off the OBD warning light, the same fault cannot recur over the next three consecutive drives. To delete the stored EOBD malfunction from the computer memory, the stored fault malfunction must not be detected over the next 40 consecutive Warm-ups (see definition).

IMPORTANT
The warning light may not come on straight after repair, but it can go on again after a few miles have been covered.
Using CLIP, always check the working order of the OBD system after all repairs. For this, it is vital to follow after repair precautions carefully (see section 5, Precautions and Procedures to follow after repair).

The list of components monitored by the OBD system gives an indication of the changes in each system.

1. Fuel circuit
- preheating phase control module,
- heater plugs,
- injectors,
- fuel pump,
- rail pressure sensor.
- fuel temperature sensor,
- flow and injection advance.

2. Air circuit
- turbocharger,
- EGR valve,
- turbocharger pressure sensor,
- air temperature sensor,
- air flowmeter,
- vacuum pump, solenoid valves,
- air inlet flap.

3. Exhaust
- particle filter,
- Delta P sensor (pressure difference),
- temperature sensors upstream of the particle filter,
- temperature sensor downstream of the particle filter,
- catalytic converter.

4. Other components
- coolant temperature sensor,
- engine speed sensor,
- camshaft position sensor,
- injection computer,
- gearbox computer.

WARNING
After repairs on one of these components, an OBD fault can recur immediately or after a few drives. The operation of the engine may seem normal when the vehicle is returned to the owner, but then a fault appears a few miles later, causing the OBD warning light to come on and the customer to return.

1. Usual procedure

The fault finding procedure for OBD faults is identical to the procedure for any injection fault. This is described in the "Introduction" of the MR for each vehicle.

The OBD faults are part of the engine faults from the vehicle's injection computer. Always use the MRs or the Technical Notes for the relevant vehicle.

2. OBD in the diagnostic

The OBD faults occur like the other engine faults and the fault finding procedure for each vehicle explains how to handle them.

Note:
The fault list varies from one engine to the next.

WARNING
Normal handling of injection faults indicated by the CLIP tool also covers the handling of OBD faults.

The injection fault finding section shows a correspondence table of the error codes displayed by the CLIP tool, DTC (computer code used by the computer), and the OBD fault codes displayed by the ScanTool.

3. The diagnostic tool: CLIP

To check the operation of the OBD system on RENAULT vehicles, always use the CLIP tool. This tool is required to read the RENAULT vehicle injection computer fault memory. The CLIP tool is standard when reading OBD fault.

IMPORTANT
It is not necessary to use a ScanTool or even the ScanTool emulator in CLIP when the fault finding on a RENAULT vehicle is carried out with the CLIP tool.

The CLIP tool is standard for all fault finding procedures on RENAULT vehicles.
More information is available on the CLIP tool:

- Information on the injection computer and all other computers:
  - the number for the supplier, the programme, the Vdiag and the software,
  - the electronic version of the computer,
  - Parts Department part no.,
  - the VIN code,
  - the injector codes,
  - a calibration identification (reference number C).
- The configuration data for each computer in each vehicle diagnosed, along with all the statuses and controls specific to each vehicle computer.
- The OBD faults occur like other engine faults from the injection computer.
- The help for the fault facilitates OBD fault recognition.

AFTER REPAIR	**IMPORTANT** **It is vital before returning the customer's vehicle to:** **– reset the OBD system,** **– check that no fault appears on the tool,** **– do a road test to check that the OBD warning light does not light up during driving.**

1. Reset the OBD system

To reset the system, let the vehicle run at idle speed for **a few minutes** (until an engine coolant temperature of **80°C is reached**) in order to ensure that no faults reoccur.

For vehicles fitted with **turbocharged engines**, this operation is vital.

If this procedure is not carried out, the OBD warning light may come back on and the vehicles could be permanently disqualified during technical checks in place in many European Union countries.

Examples:
If the EGR valve connector is not reconnected, an OBD fault is present in the computer, and may be detected with the CLIP tool.
If the vehicle is returned to the customer without running Clip tool checks, the MIL warning light is not on, but it will come on after a few drives. This makes the customer need to return. So, it is vital that you use the CLIP to check for faults after all work on the engine and transmission assembly.

2. Procedures to follow after replacing a component

The **MRs** describe the operation to be carried out with the CLIP tool after a part is replaced. These instructions must be followed very carefully as the use of the OBD system on an engine may cause new operations to be carried out.

Here are some examples of after repair operations that have to be done on injection system components affected by pollution emissions. It is possible that some parameters do not exist on certain engines.

– Replacing the Particle Filter

After replacing the particle filter, you must reset the internal monitoring parameters for the particle filter.

In the opposite case, reactivation faults can cause the following faults to occur:
- Damaged/missing particle filters (less than 8 reactivation failures),
- Damaged/missing particle filters (between 8 and 11 reactivation failures),
- "Seriousness level 1" warning light comes on (more than 11 reactivation failures).

– Replacing the EGR valve

After replacing the EGR valve, reset the parameters entitled "first offset of the EGR valve in EEPROM" and "last offset of the EGR valve in EEPROM".
Depending on the engine, the titles of the parameters may vary. Always read the MR for the relevant vehicle's engine as soon as possible.

– **Replacing the air inlet flap**

After replacing the air inlet flap, reset the parameters entitled "status line for the air inlet flap in EEPROM" and "damper valve reader error".
Depending on the engine, the titles of the parameters may vary. Always read the MR for the relevant vehicle's engine.

– **Replacing at least 2 injectors**

After replacing at least 2 injectors, reset the parameter entitled "mileage covered with the same injectors".
Depending on the engine, the titles of the parameters may vary. Always read the MR for the relevant vehicle's engine.

IMPORTANT
Some computers are loaded with the specific codes for the injectors.
Always read the section entitled "Replacing Components" in the MR for the vehicle.

WARNING
As is the case of the fault finding, the tools and procedures to be used for an injection system fitted with an OBD system are described in exactly the same way as for the non OBD injection systems. It is important to follow the RENAULT fault finding and repair rules to ensure the OBD system functions correctly.

RENAULT

Technical Note 3887A

KXX, and K4J or K4M or K9K

Remplacement des goujons de poulie arbre à cames K9 - K4

Cela parle de ....

77 11 335 082 APRIL 2004 Edition Anglaise

"The repair methods given by the manufacturer in this document are based on the technical specifications current when it was prepared.

The methods may be modified as a result of changes introduced by the manufacturer in the production of the various component units and accessories from which his vehicles are constructed."

All copyrights reserved by Renault.

The reproduction or translation in part of whole of the present document, as well as the use of the spare parts reference numbering system, are prohibited without the prior written consent of Renault.

© Renault s.a.s. 2004

Remplacement des goujons de poulie arbre à cames K9 - K4

Contents

11A **TOP AND FRONT OF ENGINE**

Camshaft 11A-1

Essential equipment
Roller-type stud removal tool

Tightening torques ▽	
the camshaft dowel	**0.8 daNm**

REPLACING A CAMSHAFT DOWEL

> **WARNING**
> It is essential to replace the camshaft dowel if it comes loose at the same time as the nut.

1 - Removal

Place the camshaft in a vice with **aluminium jaws.**

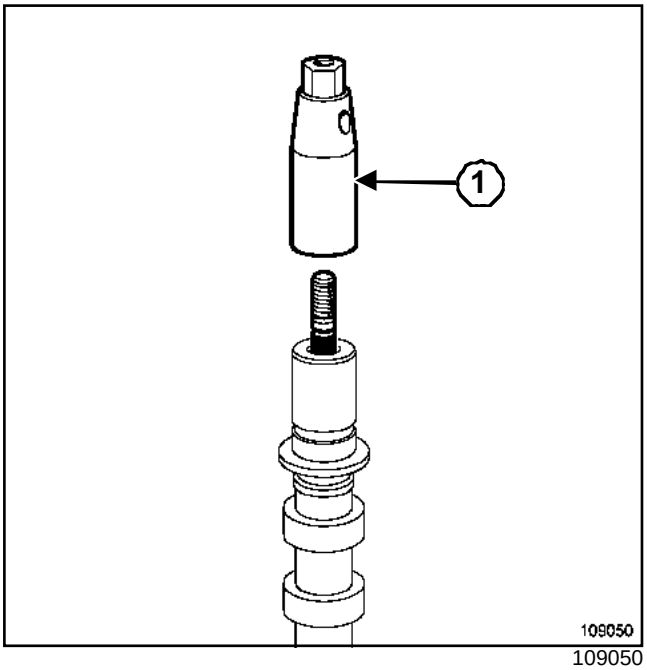

109050

Remove the dowel using a **Roller-type stud removal tool**(**1**).

2 - Cleaning the camshaft

> **WARNING**
> Clean the threaded hole of the camshaft carefully to prevent foreign bodies from entering the latter.
>
> Failure to follow this advice could lead to oil inlet holes becoming blocked, which would quickly result in engine damage.

3 - Refitting

Place the camshaft in a vice fitted with **aluminium jaws.**

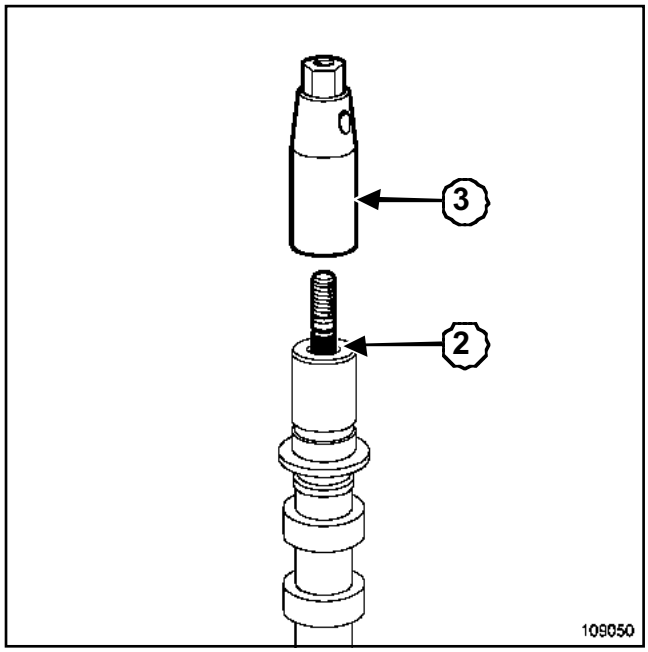

109050

Fit the new camshaft dowel (precoated section (**2**) on the camshaft side).

Torque tighten **the camshaft dowel (0.8 daNm)** using a **Roller-type stud removal tool**(**3**).

RENAULT

Technical Note 3916A

FXX, and F8Q or F9Q - KXX, and K9K - GXX, and G9T or G9U

Cleaning of EGR solenoid valve - F8Q, F9Q, G9T, G9U and K9K engines

Kangoo: XCXX - Clio II: XBXX - Mégane I: XAXX - Mégane II: XMXX - Laguna I: X56X - Laguna II - XGXX - Vel Satis: XJXX - Avantime: D40X - Espace IV: JK0X - Trafic II: XL0X - Master II: XDXX

Sub-section concerned: 14A

EGR solenoid valve cleaning procedure using tool Mot. 1757

77 11 335 782 **APRIL 2005** **Edition Anglaise**

"The repair methods given by the manufacturer in this document are based on the technical specifications current when it was prepared.

The methods may be modified as a result of changes introduced by the manufacturer in the production of the various component units and accessories from which his vehicles are constructed."

All copyrights reserved by Renault.

The reproduction or translation in part of whole of the present document, as well as the use of the spare parts reference numbering system, are prohibited without the prior written consent of Renault.

© Renault s.a.s. 2005

Cleaning of EGR solenoid valve - F8Q, F9Q, G9T, G9U and K9K engines

Contents

14A ANTIPOLLUTION

Exhaust gas recirculation solenoid valve: Cleaning 14A-1

EGR solenoid valve switch: Use 14A-5

Exhaust gas recirculation solenoid valve: Cleaning

FXX, and F9Q, and 200 or 204 or 260 or 670 or 674 or 718 or 732 or 733 or 738 or 740 or 744 or 748 or 750 or 752 or 754 or 760 or 762 or 772 or 774 or 782 or 790 or 796 or 800 or 820 – KXX, and K9K, and 260 or 262 or 270 or 272 or 700 or 702 or 704 or 706 or 710 or 712 or 722 or 728 or 729 or 750 or 752 – GXX, and G9T, and 700 or 703 or 706 or 707 or 710 or 712 or 720 or 722 or 742 or 743 or 750 – FXX, and F8Q, and 622 or 632 – GXX, and G9U, and 720 or 724 or 730 or 750 or 754

Special tooling required		
Mot. 1729	GXX – FXX – KXX	Lever for removing the exhaust gas recirculation valve
Mot. 1757	FXX – GXX – KXX	EGR solenoid valve actuator

Procedure to follow in the case of a clogged EGR solenoid valve.

I - DESCRIPTION OF THE SOLENOID VALVE

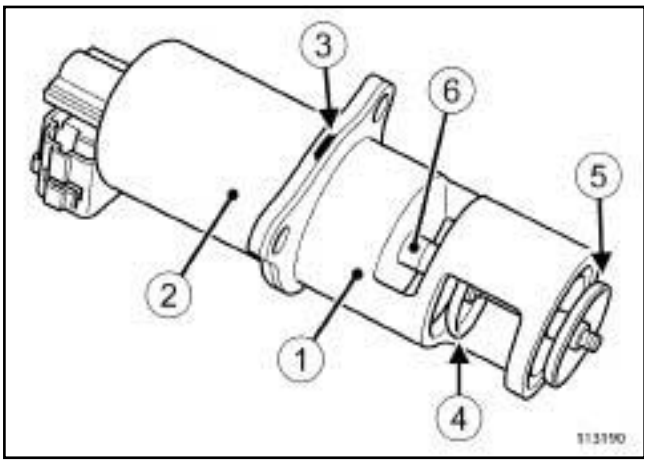

113190

(**1**) Mechanical part of the solenoid valve

(**2**) Electrical part of the solenoid valve

(**3**) Vent hole

(**4**) Lower valve

(**5**) Upper valve

(**6**) Valve shaft guide

The EGR solenoid valve is shown above in the active position: solenoid valve open.

II - CLEANING THE EGR SOLENOID VALVE

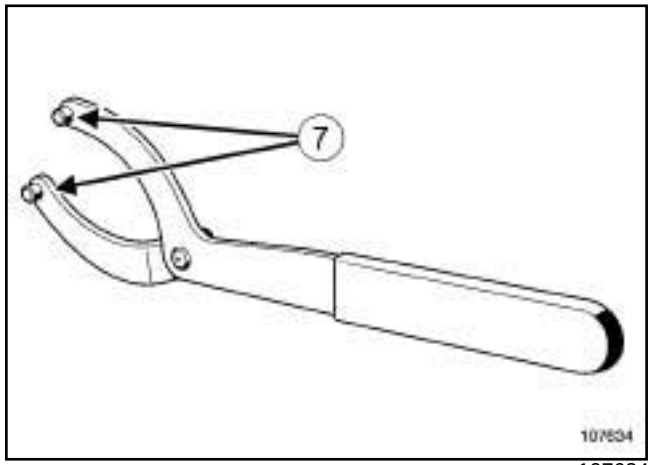

107634

Remove the EGR solenoid valve using the tool **(Mot. 1729)** (see the Workshop Repair Manual for the vehicle concerned **14A, Emission control, Exhaust recirculation solenoid valve**):

- position the spigots (**7**) of the tool **(Mot. 1729)** in the mounting holes of the EGR solenoid valve,
- take care to fully drive home the spigots (**7**),
- turn the tool in small steps to detach the EGR solenoid valve from its housing.

Clean the EGR solenoid valve (mechanical part only) using a cleaning jet.

> Note
>
> It is also possible to clean the solenoid valve (mechanical part only) using the **NETTOYANT CARBU** product (part number: **77 11 171 437**).

Exhaust gas recirculation solenoid valve: Cleaning

FXX, and F9Q, and 200 or 204 or 260 or 670 or 674 or 718 or 732 or 733 or 738 or 740 or 744 or 748 or 750 or 752 or 754 or 760 or 762 or 772 or 774 or 782 or 790 or 796 or 800 or 820 – KXX, and K9K, and 260 or 262 or 270 or 272 or 700 or 702 or 704 or 706 or 710 or 712 or 722 or 728 or 729 or 750 or 752 – GXX, and G9T, and 700 or 703 or 706 or 707 or 710 or 712 or 720 or 722 or 742 or 743 or 750 – FXX, and F8Q, and 622 or 632 – GXX, and G9U, and 720 or 724 or 730 or 750 or 754

STAGE 1

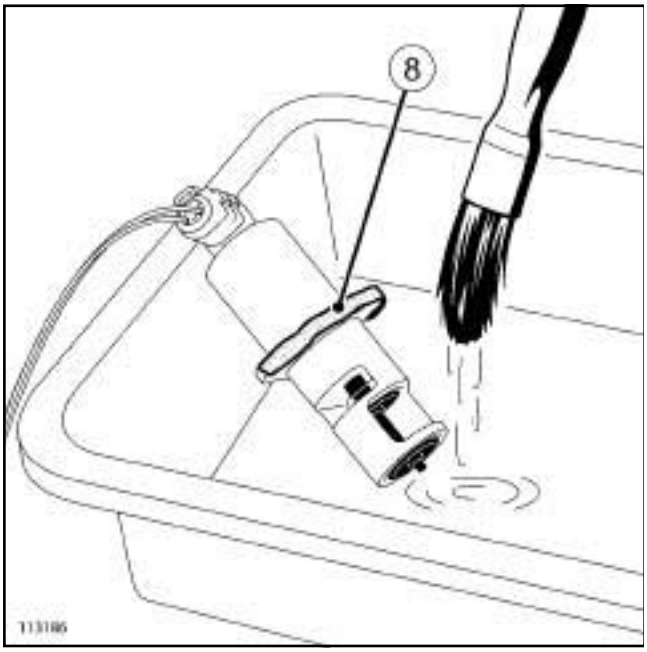

113186

Protect the vent holes ***(3)*** of the solenoid valve using adhesive tape (**8**).

Liberally drench the solenoid valve with the cleaning product whilst scrubbing it for **1 min**.

WARNING

Do not wet the electrical part of the solenoid valve with the cleaning product.

Keep the solenoid valve tilted with the connector at the top.

Only use brushes with plastic or non-corrosive metal (brass) bristles.

Cleaning using hard or corrosive tools (e.g: screwdriver) can damage the valves or their shaft, and lead to:

- a leak from the valves leading to power loss,
- loss of the upper valve, leading to destruction of the motor.

STEP 2

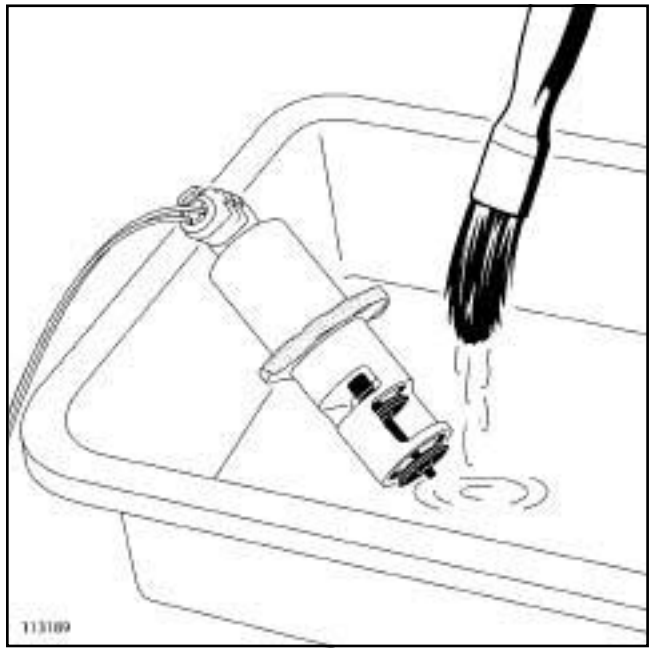

113189

Open the solenoid valve using the tool **(Mot. 1757)** (see **EGR solenoid valve actuator: Use**).

Clean the mechanical part of the solenoid valve by simultaneously scrubbing and drenching with cleaning product for **2 min**, paying attention to:

- the valve seats,
- the surfaces of the valves,
- the shaft guide of the valves.

FXX, and F9Q, and 200 or 204 or 260 or 670 or 674 or 718 or 732 or 733 or 738 or 740 or 744 or 748 or 750 or 752 or 754 or 760 or 762 or 772 or 774 or 782 or 790 or 796 or 800 or 820 – KXX, and K9K, and 260 or 262 or 270 or 272 or 700 or 702 or 704 or 706 or 710 or 712 or 722 or 728 or 729 or 750 or 752 – GXX, and G9T, and 700 or 703 or 706 or 707 or 710 or 712 or 720 or 722 or 742 or 743 or 750 – FXX, and F8Q, and 622 or 632 – GXX, and G9U, and 720 or 724 or 730 or 750 or 754

STEP 3

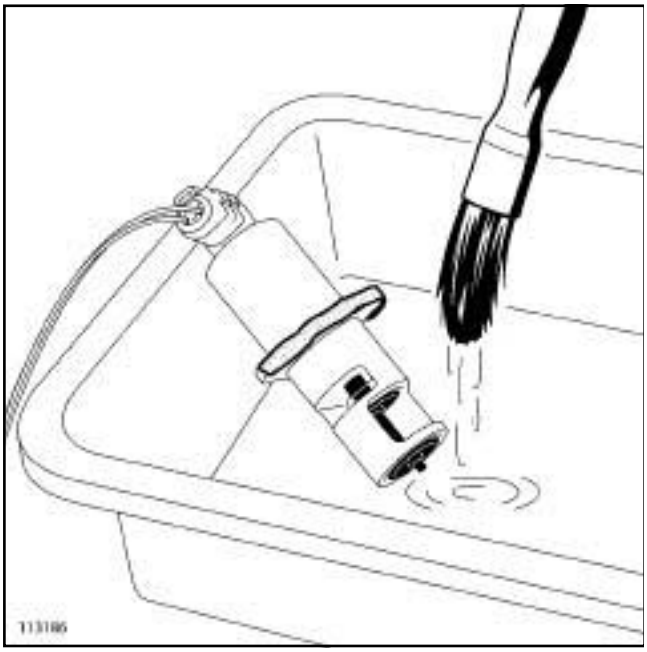

113186

Run the solenoid valve opening/closing cycle using the tool **(Mot. 1757)** (see **EGR solenoid valve actuator: Use**). During the cycle clean the mechanical part of the solenoid valve by simultaneously scrubbing and drenching with cleaning product, paying attention to:

- the valve seats,
- the surfaces of the valves,
- the shaft guide of the valves.

STAGE 4

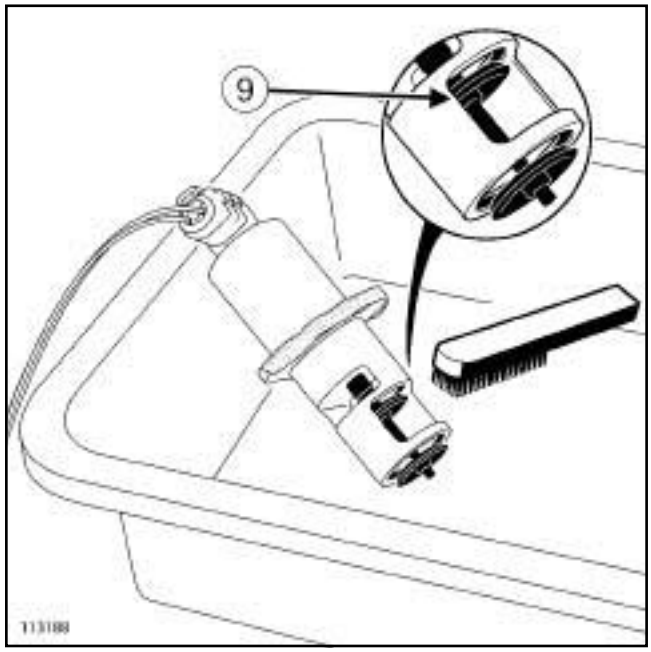

113188

After the opening/closing cycle, open the solenoid valve using the tool **(Mot. 1757)**.

Scrub the upper valve over its entire surface and circumference.

WARNING
Only use brushes with plastic or non-corrosive metal (brass) bristles.

Scrub the lower valve around its entire circumference:

- scrub the area of the lower valve accessible through the window (**9**),
- pick up the upper valve by hand (do not use a tool), and turn it a **1/4** turn
- scrub the area of the lower valve accessible through the window (**9**),
- continue until the valve has been cleaned over its entire circumference.

Repeat **STAGE 3** twice more.

Check there are no bristles from the brush in the solenoid valve.

FXX, and F9Q, and 200 or 204 or 260 or 670 or 674 or 718 or 732 or 733 or 738 or 740 or 744 or 748 or 750 or 752 or 754 or 760 or 762 or 772 or 774 or 782 or 790 or 796 or 800 or 820 – KXX, and K9K, and 260 or 262 or 270 or 272 or 700 or 702 or 704 or 706 or 710 or 712 or 722 or 728 or 729 or 750 or 752 – GXX, and G9T, and 700 or 703 or 706 or 707 or 710 or 712 or 720 or 722 or 742 or 743 or 750 – FXX, and F8Q, and 622 or 632 – GXX, and G9U, and 720 or 724 or 730 or 750 or 754

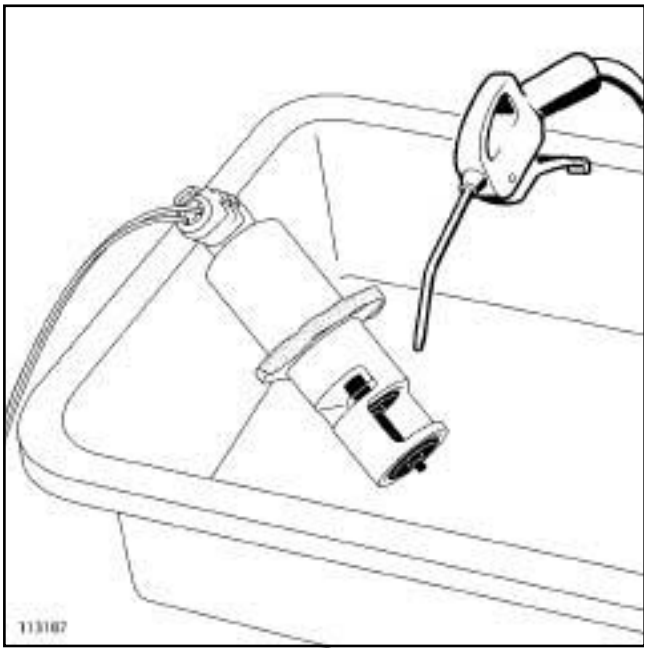

113187

Open the solenoid valve using the tool **(Mot. 1757)**.

Use a compressed air gun to blow out the solenoid valve.

Refit the EGR solenoid valve (see **14A, Emission control, EGR solenoid valve: Removal - refitting**).

After cleaning the EGR solenoid valve, follow the programming procedure carried out after EGR solenoid valve replacement (see MR Fault Finding for the vehicle concerned **13B, Diesel injection, Fault finding - Component replacement**).

KXX – FXX – GXX

Special tooling required		
Mot. 1757	FXX – GXX – KXX	EGR solenoid valve actuator

I - DESCRIPTION

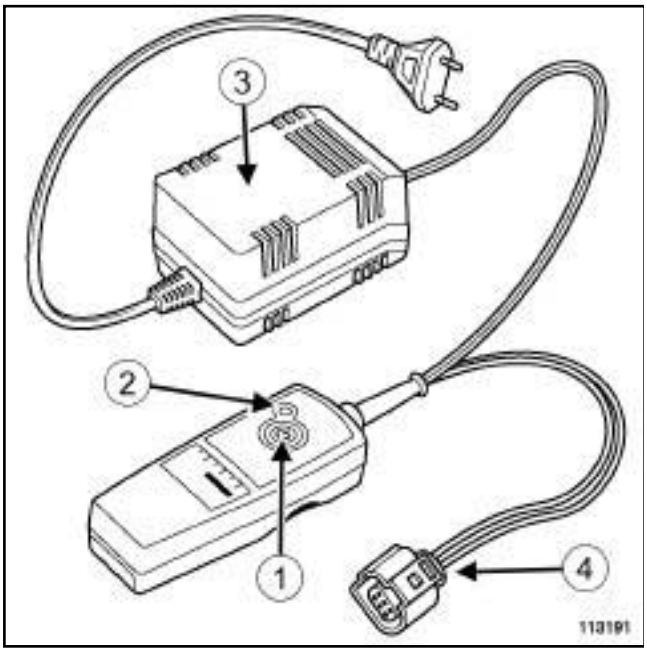

113191

(**1**)	Control button
(**2**)	Indicator light
(**3**)	Electrical adapter
(**4**)	Connector

Once the EGR solenoid valve has been removed, the tool **(Mot. 1757)** allows it to be controlled in preparation for cleaning.

II - OPERATION

The tool **(Mot. 1757)** performs the following functions:

- opening the solenoid valve,
- operating the solenoid valve opening/closing cycle.

1 - Connecting the tool

Connect the connector ***(4)*** of the tool **(Mot. 1757)** to the solenoid valve.

> Note
>
> The EGR solenoid valve actuator tool can be used to check the solenoid valve.
>
> An indicator will sound in case of:
>
> - misconnection of the tool to the solenoid valve,
> - solenoid valve short circuit,
> - break in the solenoid valve circuit.

Connect the adapter ***(3)*** of the tool **(Mot. 1757)** to a power socket.

2 - Solenoid valve control

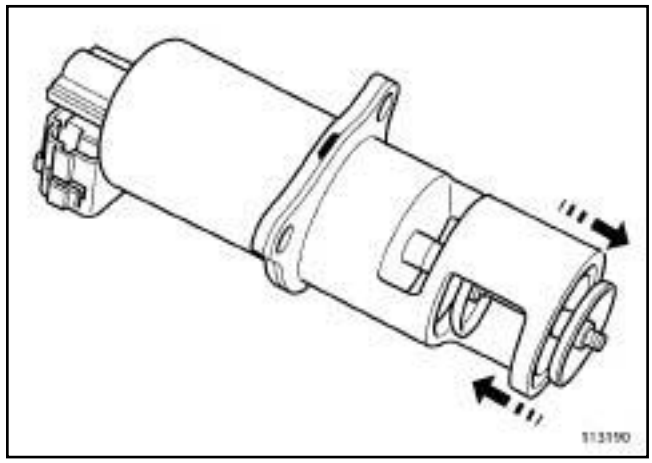

113190

To open or close the EGR solenoid valve, briefly press on the button ***(1)***.

In the open position (power supplied to the solenoid valve), the indicator light ***(2)*** comes on.

To start the solenoid valve opening/closing cycle, hold down the button ***(1)*** for longer:

- solenoid valve vibrates for **90 s**,
- the indicator light ***(2)*** flashes.

> Note
>
> The opening/closing cycle implemented by the tool makes the solenoid valve vibrate about **twice a second** .

To interrupt a running cycle, press briefly on the button ***(1)***.

RENAULT

Technical Note 3924A

XXXX

Sub-section concerned: 88C

Durability of safety pyrotechnic systems (airbag, pretensioners)

77 11 336 182 AUGUST 2004 EDITION ANGLAISE

"The repair methods given by the Manufacturer in this document are based on the technical specifications current when it was prepared.

The methods may be modified as a result of changes introduced by the manufacturer in the production of the various component units and accessories from which their vehicles are constructed."

All copyrights reserved by RENAULT.

Copying or translating, in part or in full, of this document or use of the service part reference numbering system is prohibited without the prior written authority of RENAULT.

© RENAULT 2004

The work that has been carried out on all of the safety pyrotechnic systems in Renault vehicles since 1993 shows that the precaution, of recommending the replacement of safety pyrotechnic systems 10 years after the vehicle is first driven, is no longer necessary.

The safety pyrotechnic systems (air bag, pretensioners) that have been on Renault vehicles since 1993 require no special maintenance as they get older.

Note:
Some vehicles have battery-operated airbags that need to be replaced as soon as the built-in warning light in the cushion goes on (sign that a battery is running down).

RENAULT

Technical Note 3925A

FXX, and F9Q - GXX, and G9T or G9U - KXX, and K9K - MXX, and M9R

Diesel injector and injector wells: Cleaning

Sub-section concerned: 13B

F9Q - G9T - G9U - K9K - M9R engines

Cleaning guidelines for removal - refitting of diesel injectors.

77 11 336 202 **AUGUST 2005** **Edition Anglaise**

"The repair methods given by the manufacturer in this document are based on the technical specifications current when it was prepared.

The methods may be modified as a result of changes introduced by the manufacturer in the production of the various component units and accessories from which his vehicles are constructed."

All copyrights reserved by Renault.

The reproduction or translation in part of whole of the present document, as well as the use of the spare parts reference numbering system, are prohibited without the prior written consent of Renault.

© Renault s.a.s. 2005

Diesel injector and injector wells: Cleaning

Contents

Page

13B DIESEL INJECTION

Diesel injector: Precautions for repair 13B-1

Diesel injector: Precautions for repair

FXX – GXX, and G9T – GXX, and G9U – KXX – MXX

When removing - refitting an injector, it is necessary to clean the components in order to ensure sound sealing between the injector and the cylinder head.

I - REMOVAL

Remove the injector (see **MR of the vehicle concerned, 13B, Diesel Injection, Injection: Removal - Refitting**).

II - CLEANING PARTS

IMPORTANT

Wear gloves during the operation.

1 - Cleaning the injector (if it is to be re-used)

Leave the injector to soak in some injector cleaning product (part no. **77 11 224 188**).

Clean the injector nozzle with wipes (part no. **77 11 211 707**) soaked in injector cleaning product or use a small brush **with plastic bristles**.

WARNING

It is strictly forbidden to clean the injectors with:

- a wire brush,
- an emery cloth,
- an ultrasonic cleaner.

2 - Cleaning the injector well

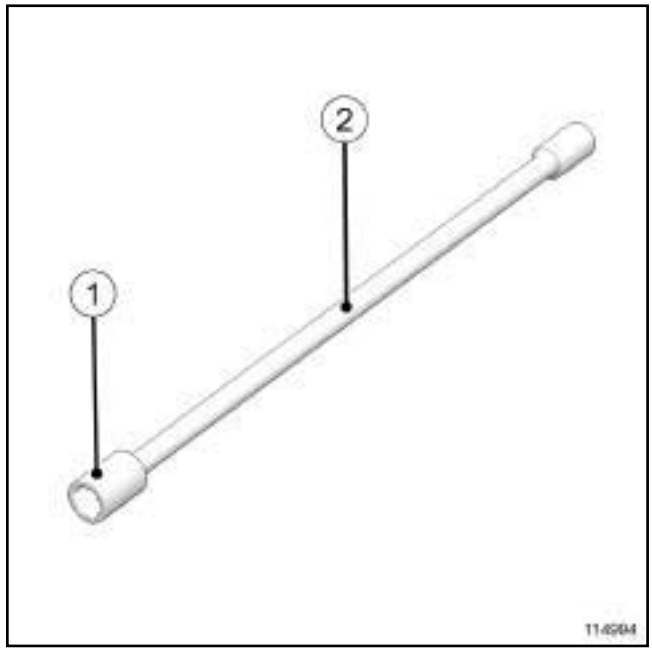

114994

1/ Fit an end piece (**1**) of **11 mm**, **1/4" in diameter,** (external ∅ of the end piece = washer ∅) to an extension piece (**2**).

3/ Cover the extension piece and end piece with the wipe.

2/ Soak the wipe in cleaning product.

4/ Insert the wipe-covered extension piece and end piece down into the bottom of the well.

5/ Clean the injector well (pay particular attention to the mating face of the washer):

- swivel the extension piece around inside the well.

6/ Remove the wipe from the well.

FXX – GXX, and G9T – GXX, and G9U – KXX – MXX

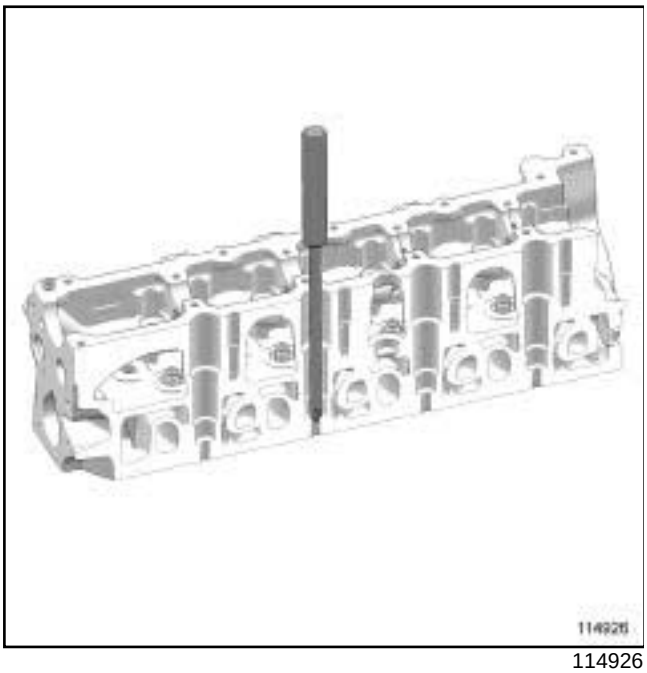

114926

7/ Insert a large-diameter Philips screwdriver (∅ > 8 mm) to block the opening to the combustion chamber.

8/ Blast compressed air into the well to remove carbon residue.

9/ Remove the screwdriver and repeat operations 1 to 8 on two successive occasions.

III - REFITTING

Refit the injector (see **MR of the vehicle concerned, 13B, Diesel Injection, Injector: Removal - Refitting**).

RENAULT

Technical Note 3955A

X84, and B84 or C84 or E84 or G84 or K84 or L84 or S84 - X84, and BM0M or BM11 or CM0M or CM11 or CM1L

Axle assembly values and settings

Megane II: XMXX

Basic manual: MR 364

Sub-section concerned: 30A

Modification of axle assembly values and settings.

Edition 2

77 11 336 982 NOVEMBER 2004 Edition Anglaise

"The repair methods given by the manufacturer in this document are based on the technical specifications current when it was prepared.

The methods may be modified as a result of changes introduced by the manufacturer in the production of the various component units and accessories from which his vehicles are constructed."

All copyrights reserved by Renault.

The reproduction or translation in part of whole of the present document, as well as the use of the spare parts reference numbering system, are prohibited without the prior written consent of Renault.

© Renault s.a.s. 2005

Axle assembly values and settings

Contents

Page

30A GENERAL VEHICLE INFORMATION

Values and adjustments for the front axle assemblies 30A-1

Values and adjustments for the rear axle assemblies 30A-8

B84 or C84 or G84 or S84, and F4R or F9Q or K4J or K4M or K9K, and 15" ALUMINIUM WHEELS or 16" ALUMINIUM WHEELS or 17" ALUMINIUM WHEELS or 15" STEEL WHEELS or 16" STEEL WHEELS or 17" STEEL WHEELS

I - PREREQUISITES

Always check the following before placing the axle assemblies on the test bench:

- the tyre size,
- the tyre inflation pressure (see **35A, Wheels and tyres, Specifications**),
- the degree of wear of the tyres,
- the clearance of the joints,
- the underbody heights (see **30A, General vehicle information, Underbody heights**).

Note:

Replace all faulty components before testing.

II - CASTOR ANGLE

Not adjustable.

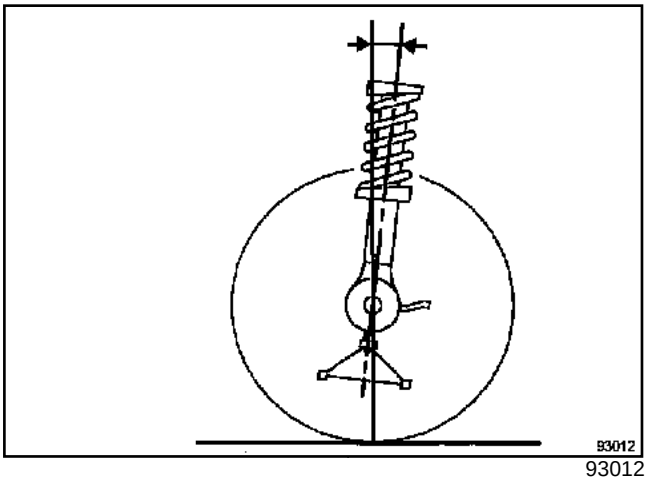

93012

Value	Position of front axle (mm)
5° 00' ± 30'	W2 - W1 = 79
5° 20' ± 30'	W2 - W1 = 71
6° 06' ± 30'	W2 - W1 = 49
6° 30' ± 30'	W2 - W1 = 40
Maximum right/left difference = 0° 30'	

III - CAMBER

Not adjustable.

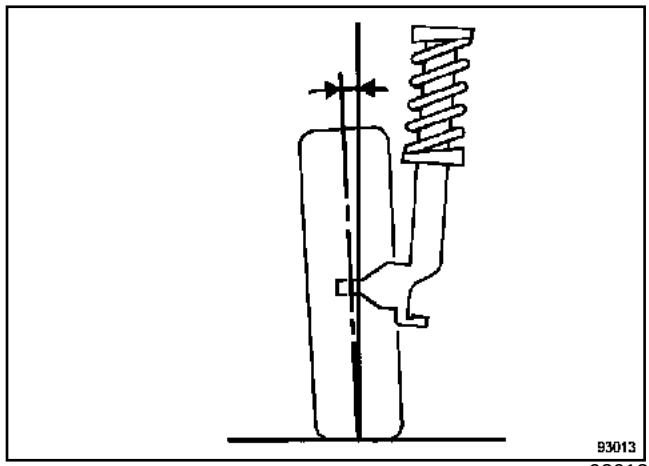

93013

Value	Position of front axle (mm)
- 0° 02' ± 30'	R1 - W1 = 127
- 0° 12' ± 30'	R1 - W1 = 146
- 0° 15' ± 30'	R1 - W1 = 152
Maximum right/left difference = 0° 30'	

IV - PIVOT

Not adjustable.

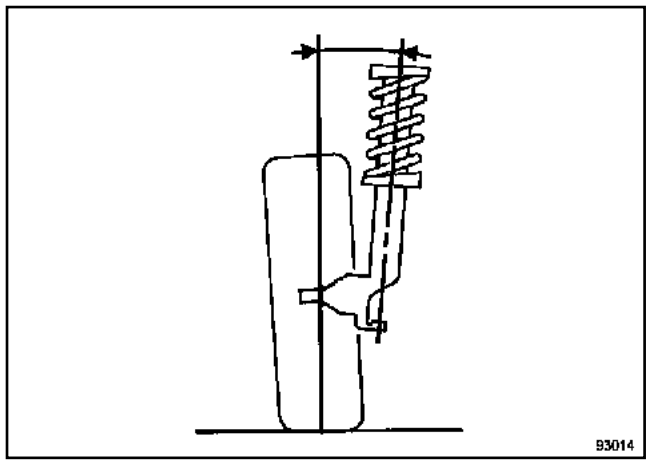

93014

B84 or C84 or G84 or S84, and F4R or F9Q or K4J or K4M or K9K, and 15" ALUMINIUM WHEELS or 16" ALUMINIUM WHEELS or 17" ALUMINIUM WHEELS or 15" STEEL WHEELS or 16" STEEL WHEELS or 17" STEEL WHEELS

Value	Position of front axle (mm)
10° 54' ± 30'	R1 - W1 = 127
11° 24' ± 30'	R1 - W1 = 146
11° 30' ± 30'	R1 - W1 = 152
Maximum right/left difference = 0° 30'	

V - WHEEL ALIGNMENT: MEANING OF SYMBOLS

WARNING
Meaning of symbols used in this document,

-: toe-out,

+: toe-in.

WARNING
When adjusting the axle assemblies, programme the steering wheel angle and torque sensor using the diagnostic tool (see **Workshop Repair Manual 366 Fault finding, 36B, Electric power assisted steering, Configuration and programming)**.

VI - WHEEL ALIGNMENT

Adjustable by rotating the track rod sleeves. After adjustment, tighten to torque the **wheel alignment adjustment lock nuts(53 Nm)**

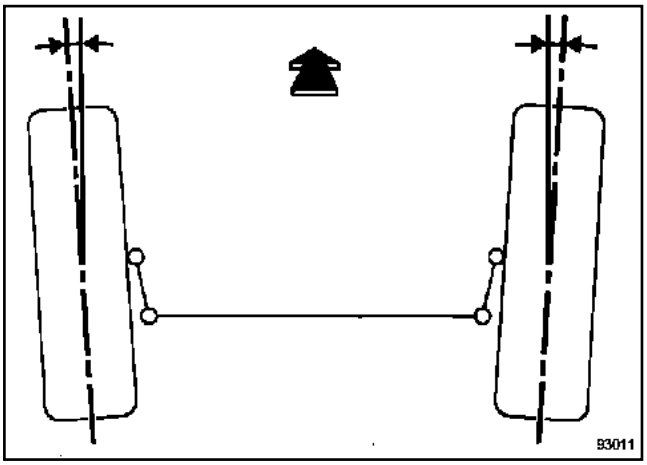

93011

Value (for two wheels)	Position of front axle (mm)
Toe-out: - 0° 10' ± 10'	Vehicle ready for operation (VODM)

E84 or K84 or L84

I - PREREQUISITES

Always check the following before placing the axle assemblies on the test bench:

- the tyre size,
- the tyre inflation pressure (see **35A, Wheels and tyres, Specifications**),
- the degree of wear of the tyres,
- the clearance of the joints,
- the underbody heights (see **30A, General vehicle information, Underbody heights**).

Note:
Replace all faulty components before checking.

II - CASTOR ANGLE

Not adjustable.

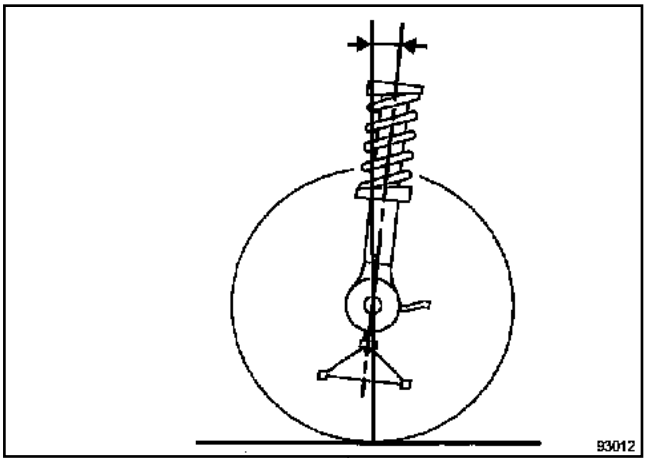

93012

E84

Value	Position of front axle (mm)
5° 12' ± 30'	W2 - W1 = 70
5° 30' ± 30'	W2 - W1 = 63
5° 48' ± 30'	W2 - W1 = 56
6° 06' ± 30'	W2 - W1 = 49
Maximum right/left difference = 0° 30'	

K84 - L84

Value	Position of front axle (mm)
4° 30' ± 30'	W2 - W1 = 94
5° 06' ± 30'	W2 - W1 = 75
5° 42' ± 30'	W2 - W1 = 62
6° 18' ± 30'	W2 - W1 = 46
Maximum right/left difference = 0° 30'	

III - CAMBER

Not adjustable.

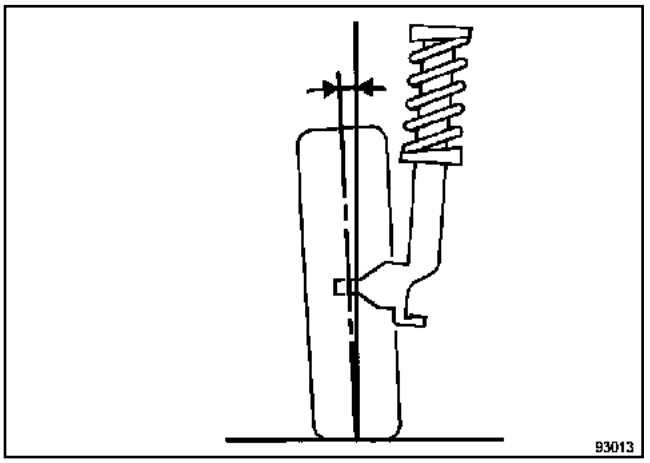

93013

E84

Value	Position of front axle (mm)
0° 00' ± 30'	R1 - W1 = 124
0° 05' ± 30'	R1 - W1 = 132
- 0° 12' ± 30'	R1 - W1 = 147
- 0° 14' ±30'	R1 - W1 = 153
Maximum right/left difference = 0° 30'	

E84 or K84 or L84

K84 - L84

Value	Position of front axle (mm)
0° 38' ± 30'	R1 - W1 = 118
- 0° 01' ± 30'	R1 - W1 = 125
- 0° 12' ± 30'	R1 - W1 = 146
- 0° 16' ± 30'	R1 - W1 = 158
Maximum right/left difference = 0° 30'	

IV - PIVOT

Not adjustable.

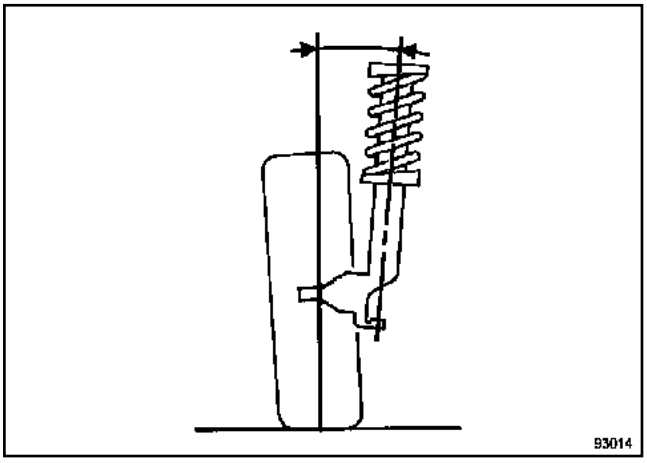

93014

E84

Value	Position of front axle (mm)
11° 02' ± 30'	R1 - W1 = 124
11° 14' ± 30'	R1 - W1 = 132
11° 32' ± 30'	R1 - W1 = 147
11° 40' ± 30'	R1 - W1 = 153
Maximum right/left difference = 0° 30'	

K84 - L84

Value	Position of front axle (mm)
10° 59' ± 30'	R1 - W1 = 118
11° 06' ± 30'	R1 - W1 = 125
11° 32' ± 30'	R1 - W1 = 146
11° 45' ± 30'	R1 - W1 = 158
Maximum right/left difference = 0° 30'	

V - WHEEL ALIGNMENT: MEANING OF SYMBOLS

WARNING

Meaning of symbols used in this document,

-: toe-out,

+: toe-in.

WARNING

When adjusting the axle assemblies, programme the steering wheel angle and torque sensor using the diagnostic tool (see **MR 366 Fault finding, 36B, Electric power assisted steering, Configuration and programming)**.

VI - WHEEL ALIGNMENT

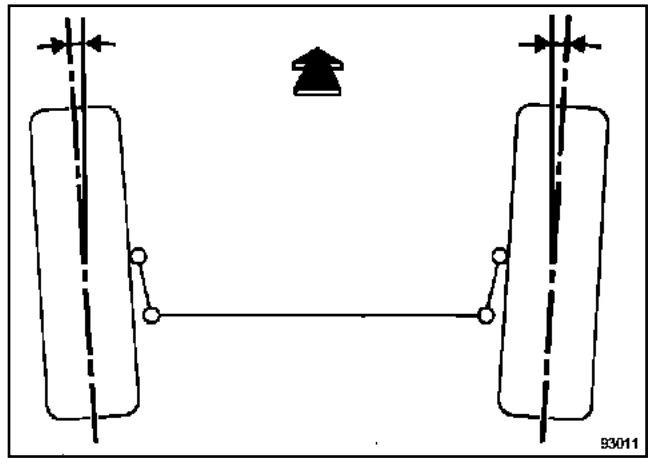

93011

E84 or K84 or L84

Value (for two wheels)	Position of front axle (mm)
Toe-out: - 0° 10' ± 10'	Vehicle in running order (VODM)

BM0M or BM11 or CM0M or CM11 or CM1L

I - PREREQUISITES

Always check the following before placing the axle assemblies on the test bench:

- the tyre size,
- the tyre inflation pressure (see **35A, Wheels and tyres, Specifications**),
- the degree of wear of the tyres,
- the clearance of the joints,
- the underbody heights (see **30A, General vehicle information, Underbody heights**).

Note:

Replace all faulty components before checking.

II - CASTOR ANGLE

Not adjustable.

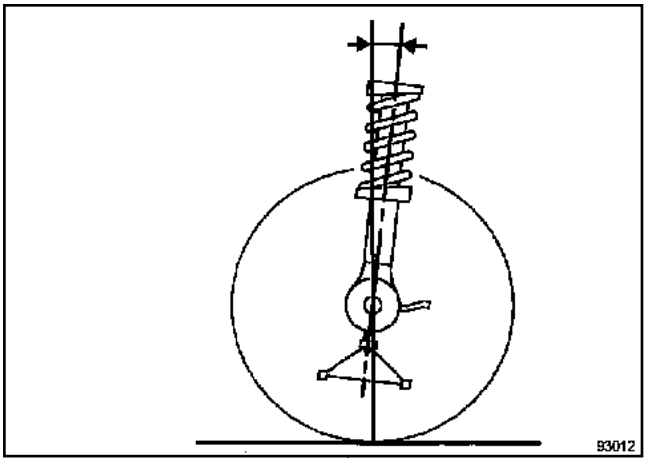

93012

Sport version

Value	Position of front axle (mm)
5° 16' ± 30' Maximum right/left difference = 0° 30'	W2 - W1 = 78.4

III - CAMBER

Not adjustable.

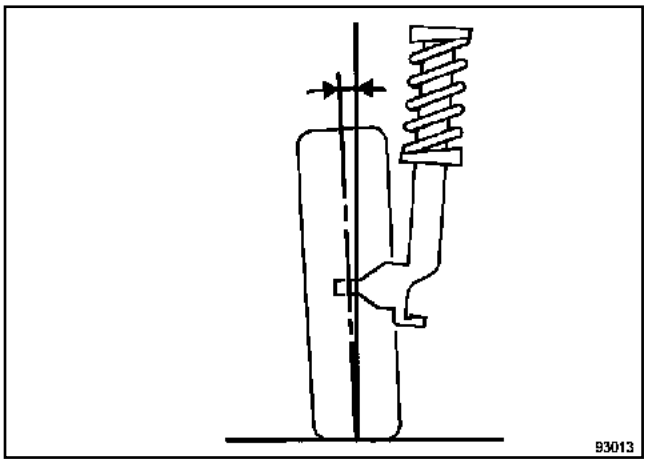

93013

Sport version

Value	Position of front axle (mm)
- 0° 47' ± 30' Maximum right/left difference = 0° 30'	R1 - W1 = 151.6

IV - PIVOT

Not adjustable.

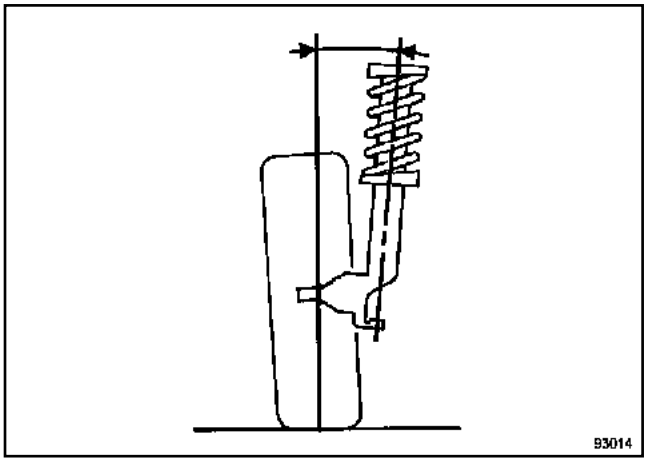

93014

Sport version

Value	Position of front axle (mm)
9° 5' ± 30' Maximum right/left difference = 0° 30'	R1 - W1 = 151.6

BM0M or BM11 or CM0M or CM11 or CM1L

V - WHEEL ALIGNMENT: MEANING OF SYMBOLS

WARNING
Meaning of symbols used in this document,

-: toe-out,

+: toe-in.

WARNING
When adjusting the axle assemblies, programme the steering wheel angle and torque sensor using the diagnostic tool (see **Workshop Repair Manual 366 Fault finding, 36B, Electric power assisted steering, Configuration and programming)**.

VI - WHEEL ALIGNMENT

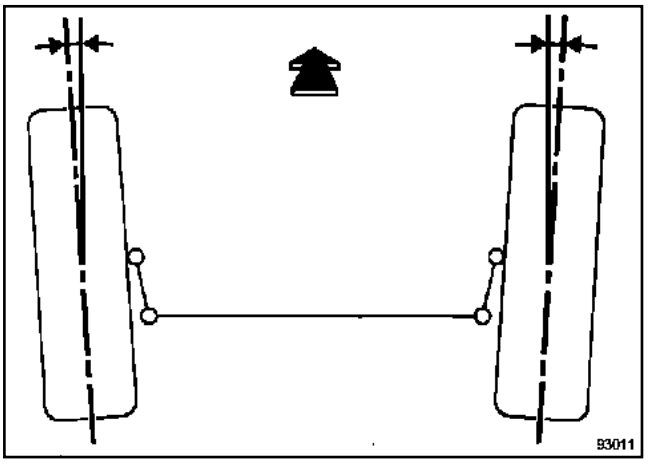

93011

Sport version

Value (for two wheels)	Position of front axle (mm)
Toe-out: - 0° 1' ±9'	Vehicle in running order (VODM)

B84 or C84 or G84 or S84, and F4R or F9Q or K4J or K4M or K9K, and 15" ALUMINIUM WHEELS or 16" ALUMINIUM WHEELS or 17" ALUMINIUM WHEELS or 15" STEEL WHEELS or 16" STEEL WHEELS or 17" STEEL WHEELS

I - PREREQUISITES

Always check the following before placing the axle assemblies on the test bench:

- the tyre size,
- the tyre inflation pressure (see **35A, Wheels and tyres, Specifications**),
- the degree of wear of the tyres,
- the clearance of the joints,
- the underbody heights (see **30A, General vehicle information, Underbody heights**).

Note:

Replace all faulty components before testing.

II - CAMBER

Not adjustable.

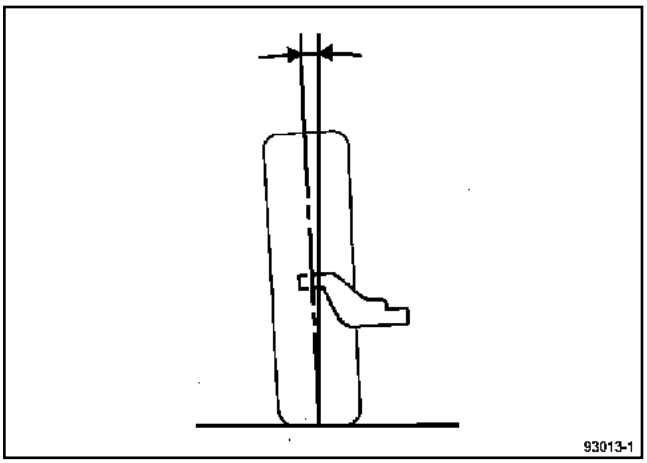

93013-1

Value	Position of rear axle
- 1° 25' ± 20'	Vehicle in running order (VODM)

III - WHEEL ALIGNMENT: MEANING OF SYMBOLS

WARNING

Meaning of symbols used in this document,

-: toe-out,

+: toe-in.

IV - WHEEL ALIGNMENT

Not adjustable.

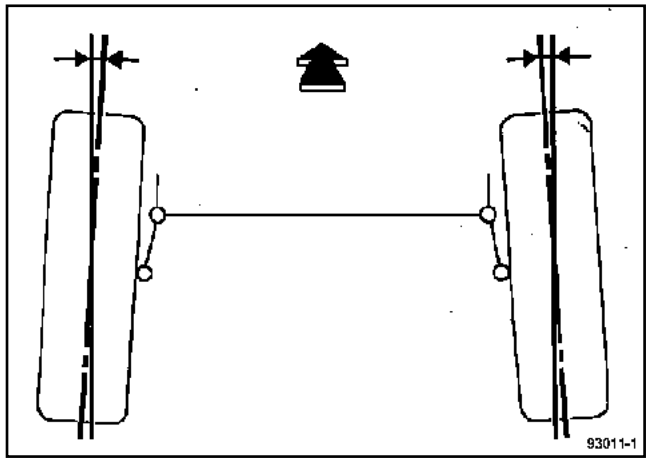

93011-1

Value (for two wheels)	Position of front axle (mm)
Toe-in: 0° 32'± 25'	Vehicle in running order (VODM)

E84 or K84 or L84

I - PREREQUISITES

Always check the following before placing the axle assemblies on the test bench:

- the tyre size,
- the tyre inflation pressure (see **35A, Wheels and tyres, Specifications**),
- the degree of wear of the tyres,
- the clearance of the joints,
- the underbody heights (see **30A, General vehicle information, Underbody heights**).

Note:

Replace all faulty components before testing.

II - CAMBER

Not adjustable.

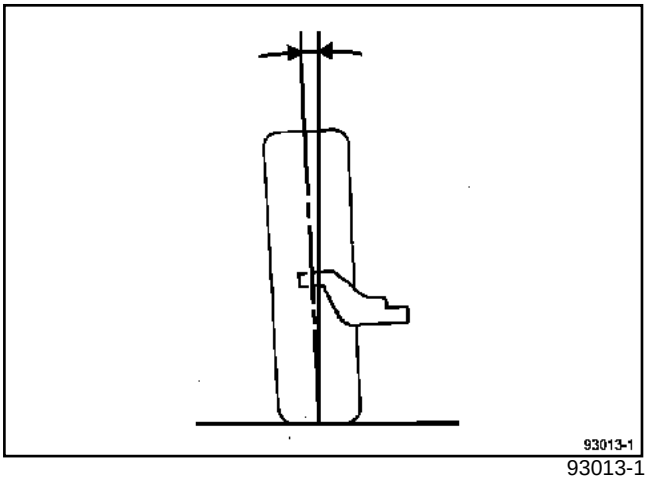

93013-1

E84 -K84 - L84 - Sport version

Value	Position of rear axle
- 1° 25' ± 20'	Vehicle in running order (VODM)

III - WHEEL ALIGNMENT: MEANING OF SYMBOLS

WARNING

Meaning of symbols used in this document,

-: toe-out,

+: toe-in.

IV - WHEEL ALIGNMENT

Not adjustable.

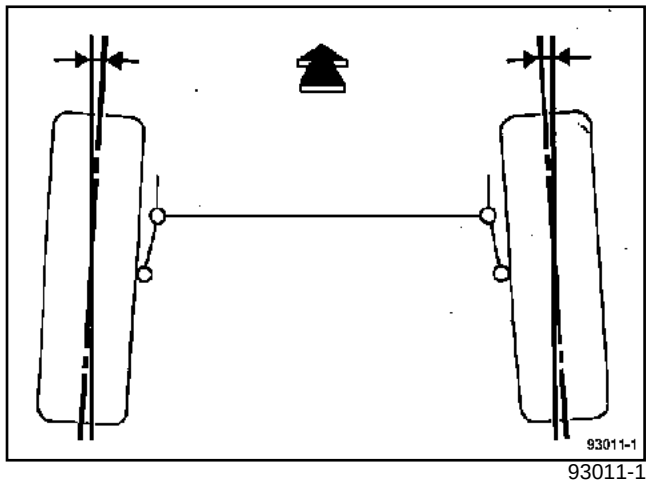

93011-1

E84

Value (for two wheels)	Position of front axle (mm)
Toe-in: 0° 34' ± 20'	Vehicle in running order (VODM)

K84

Value (for two wheels)	Position of front axle (mm)
Toe-in: 0° 28' ± 20'	Vehicle in running order (VODM)

L84

Value (for two wheels)	Position of front axle (mm)
Toe-in: 0° 30' ± 20'	Vehicle in running order (VODM)

Sport version

Value (for two wheels)	Position of front axle (mm)
Toe-in: 0° 76' ± 21'	Vehicle in running order (VODM)

RENAULT

Technical Note 3969A

TTY

Repairing the plastic fuel pipes

All types: XXXX

Basic manual: All the MRs

Sub-section concerned: 19C

Rapid operation procedures on the plastic fuel pipes to facilitate repair, using Mot. 1265 and Mot. 1265-01 removal tools, and cutting tool Mot. 1352.

77 11 338 262 **DECEMBER 2004** **Edition Anglaise**

"The repair methods given by the manufacturer in this document are based on the technical specifications current when it was prepared.

The methods may be modified as a result of changes introduced by the manufacturer in the production of the various component units and accessories from which his vehicles are constructed."

All copyrights reserved by Renault.

The reproduction or translation in part of whole of the present document, as well as the use of the spare parts reference numbering system, are prohibited without the prior written consent of Renault.

© Renault s.a.s. 2005

Repairing the plastic fuel pipes

Contents

19C **RESERVOIR**

Fuel pipes: Repair 19C-1

Special tooling required	
Mot. 1265	Pliers to separate the quick-release unions on the fuel pipes diam.8
Mot. 1265-01	Pliers to separate the quick-release unions on the fuel pipes diam.10
Mot. 1352	Plastic fuel pipe cutter

I - REPAIR

It is now possible to repair plastic fuel pipes without having to entirely remove them.

II - PRESENTATION

Two specific parts, one **8 mm** in diameter and the other **10 mm** in diameter are needed for the full repair of the fuel pipe assembly:

- A double quick-release union of the same sort as those which originally came with the pipes; this ensures that the connection is correctly sealed.
- A tube with a **90°** bend (length **1.5 m**) equipped with a fixed plastic end piece enabling, using one of its ends, the following:
  - either a connection to a flexible hose (rubber),
  - or a connection at right angles to the pipe.

IMPORTANT
Do not smoke and do not bring heat sources near the working area during any operation on the fuel tank or fuel lines.

III - DESCRIPTION AND USE OF DOUBLE UNION

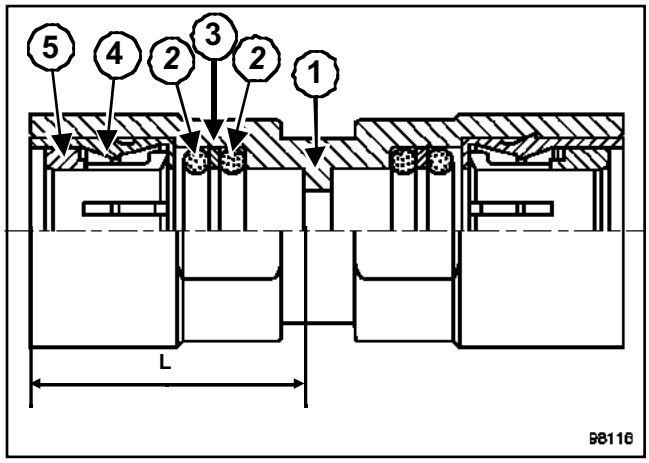

98116

(**1**): Body

(**2**): O-rings x2

(**3**): Washer

(**4**): Dowel

(**5**): Clip

(**L**): Length of insertion (L = **18.5 mm**)

IV - FITTING

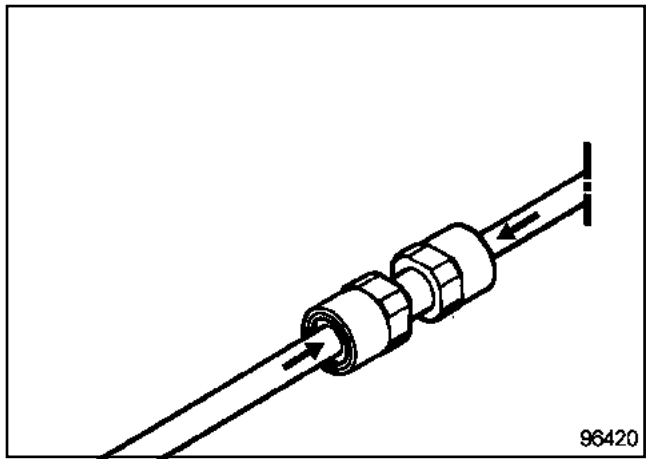

96420

Fit the union with the appropriate diameter directly on to the pipe.

WARNING
As shown in the diagram, two O-rings provide the seal. Push the pipe as far as it will go into the union.

V - REMOVAL

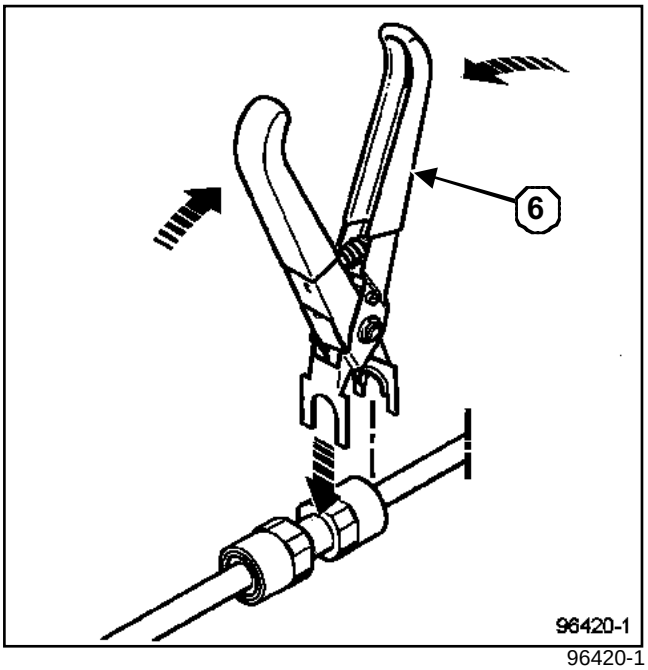

96420-1

Remove the union using pliers **(Mot. 1265)** and **(Mot. 1265-01)**(**6**) which fit the pipes.

VI - CUTTING THE PIPE

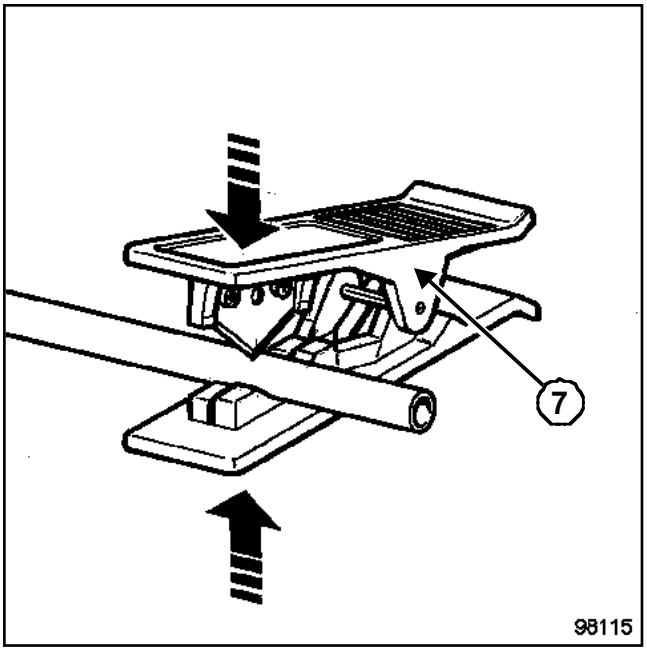

98115

To avoid damaging the two union O-rings and to provide a perfect seal when fitting, perform the cutting operation using tool **(Mot. 1352)**(**7**).

VII - REPAIR PROCEDURE FOR FUEL PIPES

Example: on Twingos.

> **IMPORTANT**
> Repairs to plastic fuel pipes are always carried out without heat: it is forbidden to use a flame or heat source when working with this type of material.

1st case

REPAIRS TO ENGINE COMPARTMENT END

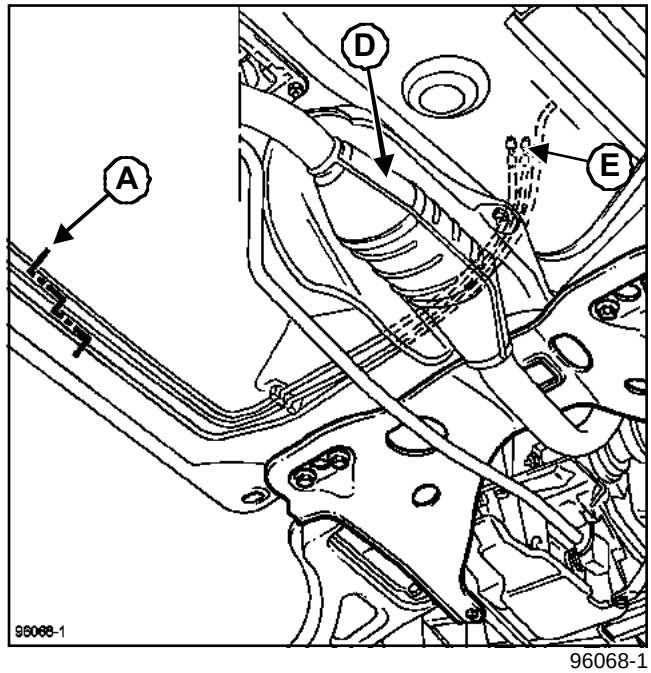

96068-1

Using tool **(Mot. 1352)** cut the three pipes at offset positions (according to the mark (**A**)) in order to accommodate the space requirement of the double unions between the pipes themselves and the routing.

> **IMPORTANT**
> For safety reasons do not place double unions on the pipes between the engine compartment and either the catalytic converter or the expansion chamber (**D**). Fit these unions as far away as possible from the catalytic converter: no double union should be less than **50 cm** away from the catalytic converter, otherwise **REPLACE THE ENTIRE PIPE**.

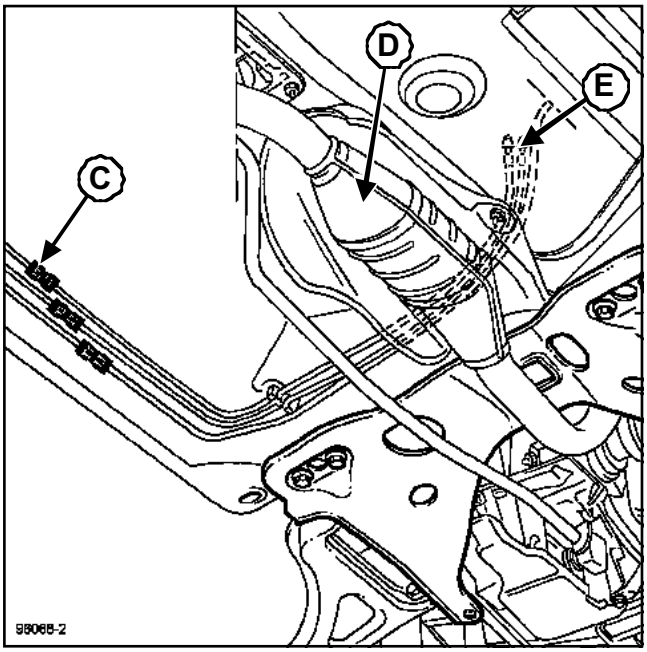

96068-2

Replace the two **supply** and **fuel return** pipes with two repair tubes fitted with end pieces (**E**), so as to have the same type of union as that for flexible rubber hoses. Cut the **90°** bend using tool **(Mot. 1352)** (not used in this case).

Join the assembly to the original pipe (previously cleaned) with two double unions (**C**) of the appropriate diameter.

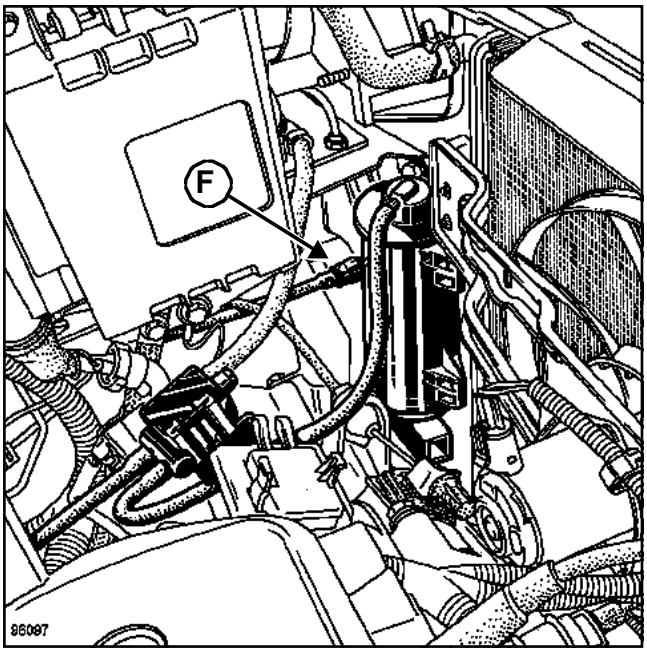

96097

Replace the **petrol vapour rebreathing** pipe with a repair pipe, which has been previously cut to the length of the distance between the two ends, and make the connections on the canister end (**F**) and the fuel tank end ***(C)*** using two double unions.

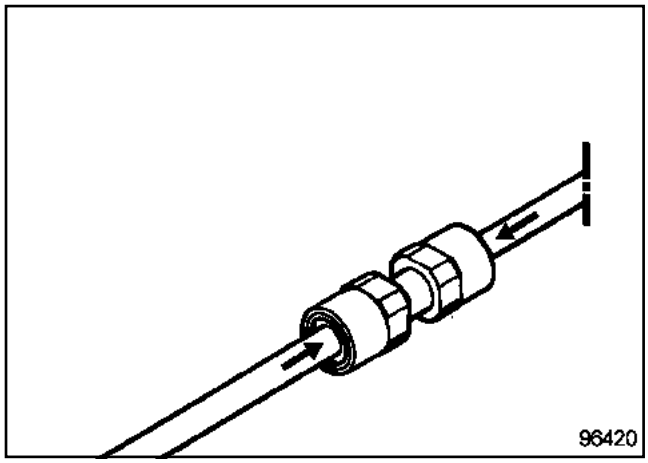

96420

Note:

Push the pipe as far as it will go into each union to ensure that the seal is correct on the internal O-rings.

2nd case

REPAIRS TO INTERMEDIARY PIPES

Partially replace the intermediary pipes for the section between the catalytic converter or the expansion chamber and the fuel tank using the repair pipe.

Cut the desired length (**1.50 m** max), or the appropriate length of routing using the **90°** bend.

Connect each end using the double quick-release unions.

When dealing with greater lengths, use the replacement piping assembly.

3rd case

REPAIRS TO THE FUEL TANK END

For tank end pipes that have model-specific routings, use replacement pipes:

- either replacing all the piping,

- or replacing the tank end section only.

For the latter, apply the following procedure.

REMOVAL

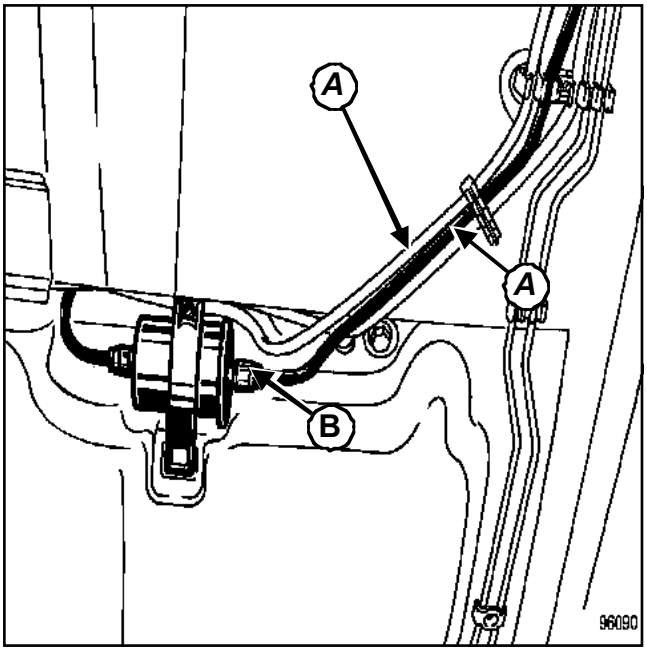

96090

Example: TWINGO

Using tool **(Mot. 1352)**, cut the two fuel supply-return pipes and the petrol vapour rebreathing pipes at off-set positions according to the mark (**A**).

Disconnect the single union (**B**) with pliers **(Mot. 1265)**.

Remove the tank.

Replace the corresponding tank pipes.

REFITTING

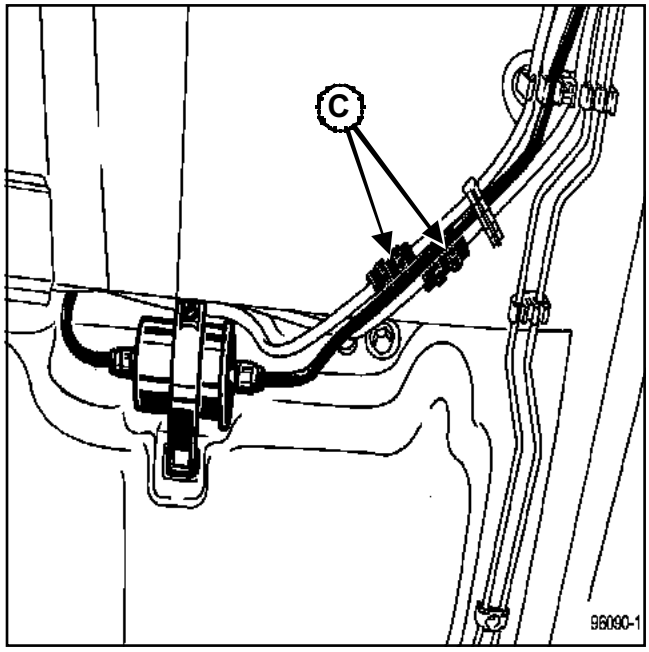

96090-1

Refit the fuel tank. Join the assembly to the original pipe (previously cleaned) with two double unions (**C**) of the appropriate diameter.

Note:

This type of connection can make removing tanks easier.

On the fuel gauge end, a repair to a single quick-release union can be made using double unions.

In this case, cut level the tank pipe level with the gauge and interpose a double union with a diameter corresponding to the damaged single union.

RENAULT

Technical Note 3981A

KXX, and K9K

Modification to high pressure pipe tightening torque on K9K engines

CLIO II: XBXX

KANGOO: XCXX

MODUS: XPXX

MEGANE II: XMXX

Basic manuals: MR 337 - 325 - 364 - 385

Sub-section concerned: 13B

Development of high pressure pipes on K9K Delphi engines requiring a tightening torque modification.

77 11 338 522 **JULY 2005** **Edition Anglaise**

"The repair methods given by the manufacturer in this document are based on the technical specifications current when it was prepared.

The methods may be modified as a result of changes introduced by the manufacturer in the production of the various component units and accessories from which his vehicles are constructed."

All copyrights reserved by Renault.

The reproduction or translation in part of whole of the present document, as well as the use of the spare parts reference numbering system, are prohibited without the prior written consent of Renault.

© Renault s.a.s. 2005

Modification to high pressure pipe tightening torque on K9K engines

Contents

Page

13B **DIESEL INJECTION**

High pressure pipes:
Removal - Refitting 13B-1

High pressure pipes: Removal - Refitting

The high-pressure pipes between the high-pressure pump and the injector rail, as well as the pipes between the rail and the injectors have been modified on K9K engines fitted with a Delphi injection system.

The procedure for operating on the high-pressure pipes has not been modified (see **MR for the vehicle concerned: 13B, Diesel injection**) but the tightening torques for the pipes has changed from 38 Nm to **24 Nm**.

WARNING

Torque tighten the following high-pressure pipes of the rail-injector and rail-pump assemblies to **38 Nm**:

- 77 01 207 025,
- 77 01 207 026,
- 77 01 207 027,
- 77 01 207 028,
- 77 01 207 029.

For the other high-pressure pipe part nos., tighten to a torque of 24 Nm.

RENAULT

Technical Note 3982A

TTY

Wheel balancing

Basic manual: Technical Note 3509A

Sub-section concerned: 35A

Wheel balancing procedure applicable to all vehicles.

Edition 2

77 11 338 762 **JANUARY 2005** **Edition Anglaise**

"The repair methods given by the manufacturer in this document are based on the technical specifications current when it was prepared.

The methods may be modified as a result of changes introduced by the manufacturer in the production of the various component units and accessories from which his vehicles are constructed."

All copyrights reserved by Renault.

The reproduction or translation in part of whole of the present document, as well as the use of the spare parts reference numbering system, are prohibited without the prior written consent of Renault.

© Renault s.a.s. 2005

Wheel balancing

Contents

Page

35A **WHEELS AND TYRES**

Wheel: Balancing 35A-1

Equipment required
pedal press

60 mm ring

MAKE	MACHINE TYPE	SHAFT DIAMETER	RING PART NO. (SUPPLIER)	RING PART NO. (HAWEKA)
BALCO	BALCO 995	**28 mm**	160 280 012	160 280 012
MULLER BEM	1605-1610-1620-1625-1630-1460-1650	**30 mm**	160 300 012	160 300 012
MULLER BEM	4605-5604-5605	**35 mm**	No	160 350 012
RAVAGLIOLI	G120-G121-G122	**36 mm**	GAR 147	160 360 012
CORGHI	All types	**38 mm**	No	160 380 012
MULLER BEM	1611-1626-1627-1636-1638-1639-1690	**40 mm**	102857	160 400 012
FACOM	All types	**40 mm**	UA.SU16	160 400 012
HOFMANN	All types	**40 mm**	160 400 012	160 400 012
BEISSBARTH	All types	**40 mm**	000075546	160 400 012

Order the ring from your hardware manufacturer.

I - PREREQUISITES FOR WHEEL BALANCING

Wheel balancing is a measurement operation.

Several conditions must be met to achieve a reliable result in a single operation.

The wheel balancer must be installed in accordance with the manufacturer's instructions.

It is essential that the machine is recalibrated at the intervals specified by the manufacturer.

Never grease the threaded shaft.

Check the condition of the supports, centring components and mountings.

Replace any faulty parts (see manufacturer's instructions).

The wheel and the wheel balancer must be clean.

Driver's complaint

If the wheels are not correctly balanced this causes the steering wheel and/or the vehicle floor to vibrate.

The vibrations occur between **54 mph (90 km/h)** and **90 mph (150 km/h)**.

Adjust the tyre pressure (see **MR of the vehicle concerned, 35A, Wheels and tyres**).

Perform a road test of at least **1.2 miles (2 km)** before the wheel balancing operation to prevent a flat spot forming on the tread when the vehicle is stationary.

After the road test:

- raise the vehicle immediately,

- leave the four wheels hanging free,

- release the parking brake.

105870

To reproduce the exact vehicle wheel assembly, it is essential to fit a ring (**1**) with a diameter of **60 mm** on the wheel balancer.

There are 3 types of weights:

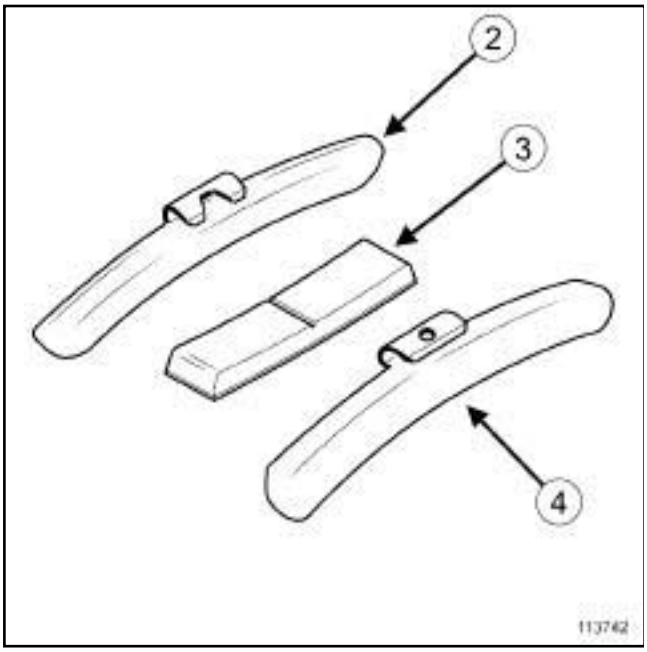

113742

(**2**)	Alloy wheel rim with flange
(**3**)	Alloy wheel rim without flange
(**4**)	Steel wheel rim with flange

In certain countries it is prohibited to use lead weights. Instead, ZAMAK weights are recommended.

Only use weights provided by the Parts Department.

II - WHEEL REMOVAL AND WHEEL BALANCING

Place the vehicle on a two-post lift immediately after the road test (see **MR of the vehicle concerned, 02, Lifting equipment**).

Loosen the wheel bolts.

Raise the vehicle.

Release the parking brake.

Check that the wheels are not damaged due to accidental impacts (if they are, replace the damaged components),

Position the wheel valves at the top.

Fit tool **pedal press**.

Remove:

- the wheel bolts,

- the wheel.

Always clean the bearing surfaces of the wheel and the disc (or drum).

Make sure that the wheel balancer bearing surface and all the centring equipment (ring, thrust plate, etc.) are kept clean.

Try not to scratch the (alloy) wheel rim with the wheel tightening device.

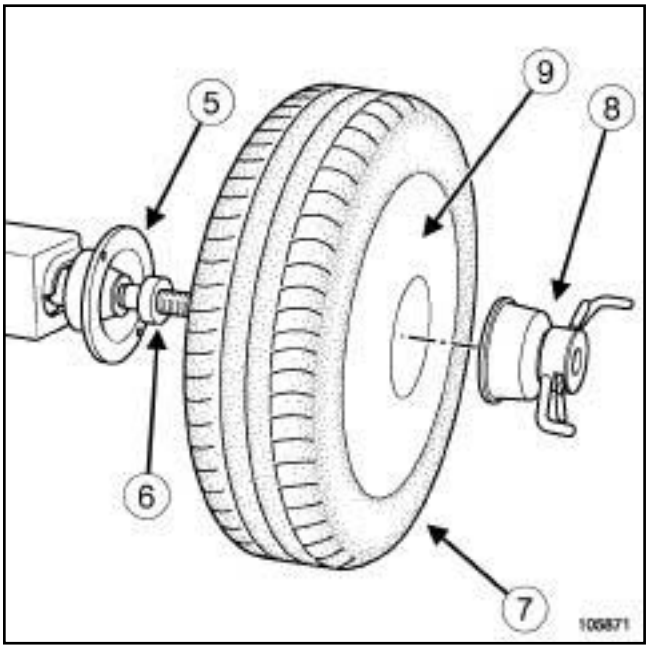

105871

The wheel is fitted on the wheel balancer as follows:

- (**5**) wheel balancer back-plate,

- (**6**) ring, diameter **60 mm**,

- (**7**) wheel,

- (**8**) wheel tightening device (certain alloy wheel rims need a device **200 mm** in diameter to ensure correct tightening),

- (**9**) exterior plane of the wheel.

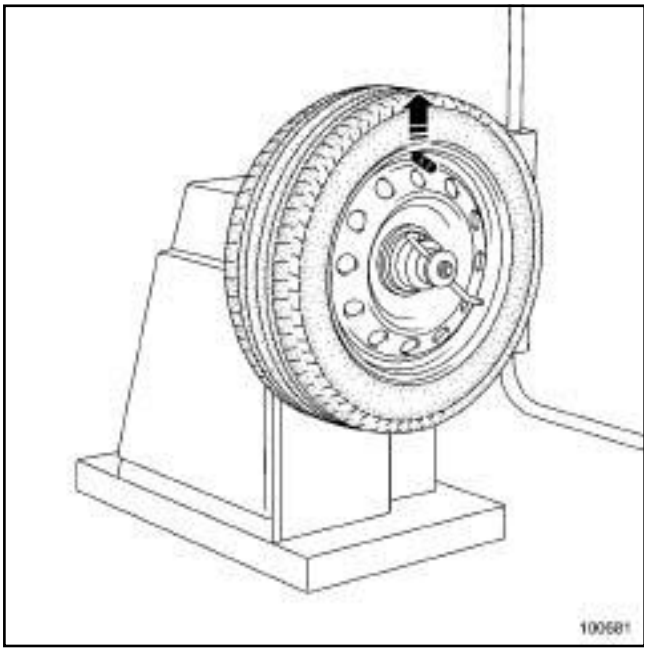

100681

Place the valve at the top of the wheel balancer, then carry out the tightening procedure.

Remove any stones which may be jammed in the tyre treads.

Enter the parameters for the wheel into the wheel balancer device.

Operate the wheel balancer and check the wheel balance, which should be **0 g** on each plane of the wheel.

If this is not the case, remove the old balancing weights and repeat the wheel balancer procedure, checking that the wheel balance equals **0** on each wheel plane.

> **WARNING**
> To avoid loss of the balancing weights, use only weights appropriate for the wheels on the vehicle.

III - REFITTING THE VEHICLE WHEELS

Refit the wheel onto the vehicle in the same position it was removed with the valve at the top.

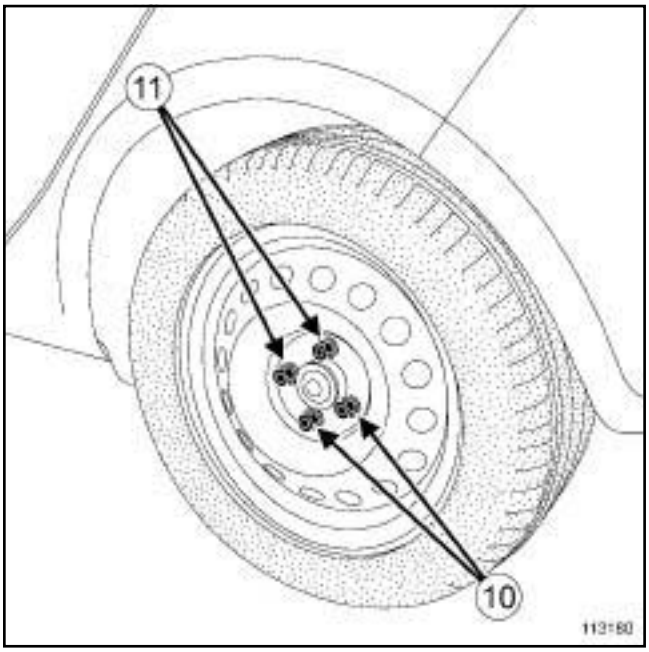

113180

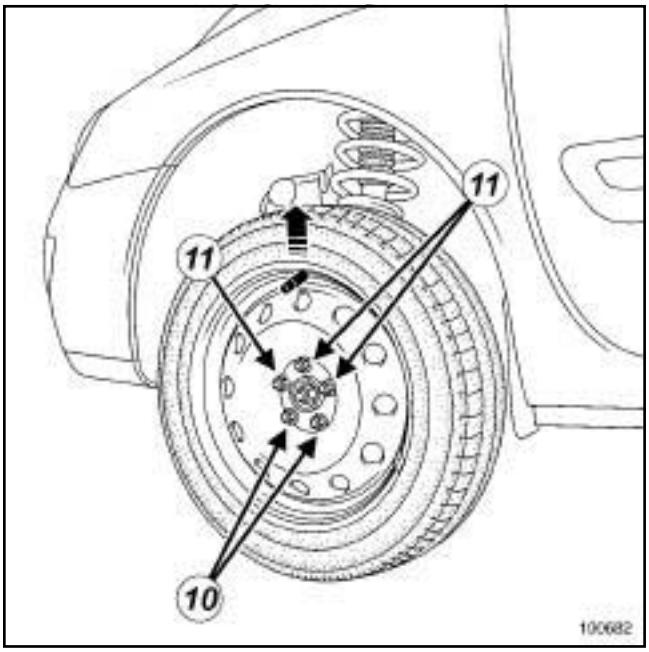

100682

Pretighten the **wheel bolts (30 Nm)** with the wheel hanging freely, starting with the lower bolts (**10**) and finishing with the upper bolts (**11**).

Remove **pedal press**.

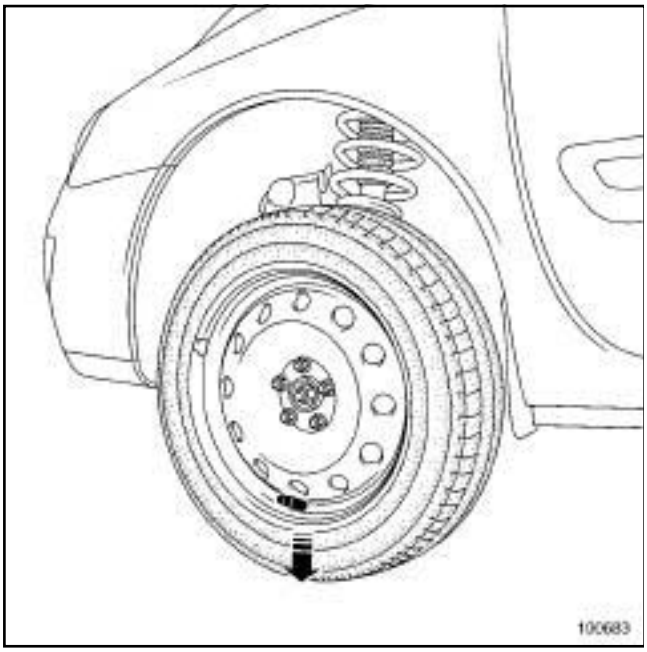

100683

Rotate the wheel **180°** to bring the valve into the low position.

Place the vehicle on its wheels.

Tighten to torque the wheel bolts (see **MR for the vehicle, 35A, Wheels and tyres**).

Carry out this operation on the other vehicle wheels.

Carry out a road test to confirm the customer complaint is resolved.

CLIO 2
KANGOO

List below

with a K9K 700 – 702 – 704 – 710 engine

12B OIL SEEPAGE BETWEEN THE AIR INLET DUCT AND THE TURBOCHARGER

Other sub-section concerned: **08A**

- Engine: **K9K 700 – 702 – 704 – 710**
- Gearbox: **XXX**

Basic manual:

Component Manual: **Mot. K9**
Technical Note: **3470A, 3527A**

LIST OF VEHICLES CONCERNED

Vehicle	Type	from	to
CLIO 2	BB0 7	F 000005	F 620841
		W 000017	W 780784
		Y 000002	Y 431032
	BB0 8	F 000001	F 620843
		W 000002	W 780735
		Y 000001	Y 430981
	CB0 7	F 260000	F 640451
		W 000004	W 380279
		Y 000001	Y 380686
	CB0 8	F 000001	F 640449
		W 000004	W 380272
		Y 000001	Y 380671
	LB0 7	R 000004	R 000008
	SB0 7	F 000003	F 284832
		W 000003	W 370253
		Y 000001	Y 270058

Vehicle	Type	from	to
CLIO 2	SB0 8	W 094361	W 119473
	SB0 9	F 000001	F 000001
		W 000001	W 370008
	BB1 W	L 000006	L 001245
	CB1 W	J 000001	J 000376
	LB1 W	L 000005	L 001055
		R 000001	R 450391
KANGOO	FC0 7	U 260004	U 668693
	FC0 8	U 276265	U 668695
	FC0 9	U 000007	U 668661
	KC0 7	U 260008	U 669482
	KC0 8	U 292969	U 669493
	KC0 9	U 000002	U 669407

"The repair methods given by the manufacturer in this document are based on the technical specifications current when it was prepared.

The methods may be modified as a result of changes introduced by the manufacturer in the production of the various component units and accessories from which his vehicles are constructed".

All copyrights reserved by RENAULT.

Copying or translating, in part or in full, of this document or use of the service part reference numbering system is forbidden without the prior written authority of RENAULT.

© RENAULT 2003

TECHNICAL INFORMATION

Customer complaint
– Oil seepage between the air inlet duct and the turbocharger.

Possible cause
– Sealing between the air inlet duct and the turbocharger.

Fault finding
– Check for traces of oil between the air inlet duct and the turbocharger.

Operation to be carried out
– Fit a sealing ring to the turbocharger inlet duct.

Description of the operation

WARNING
Switch off the engine.
Switch off all the electrical consumers.
Allow **1 minute** for the electronic systems to switch off.
Wait for the engine cooling fan to shut off completely.

– Disconnect the battery, starting with the negative terminal.

REMOVAL
– Remove the engine cover.
– Remove the air filter unit and the turbocharger air ducts according to Technical Note 3527A.
– Remove any traces of oil between the air inlet duct and the turbocharger.

REFITTING

WARNING
Handle sealing ring (A) carefully.
The convex section of sealing ring (C) should be facing outwards.
The factory markings (B) should be visible.

– Fit sealing ring (A) onto the neck of the turbocharger inlet.

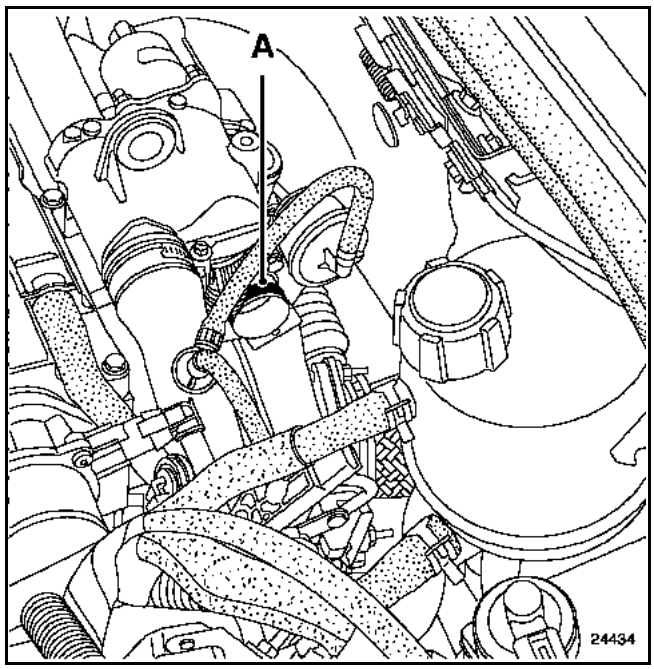

A – Sealing ring

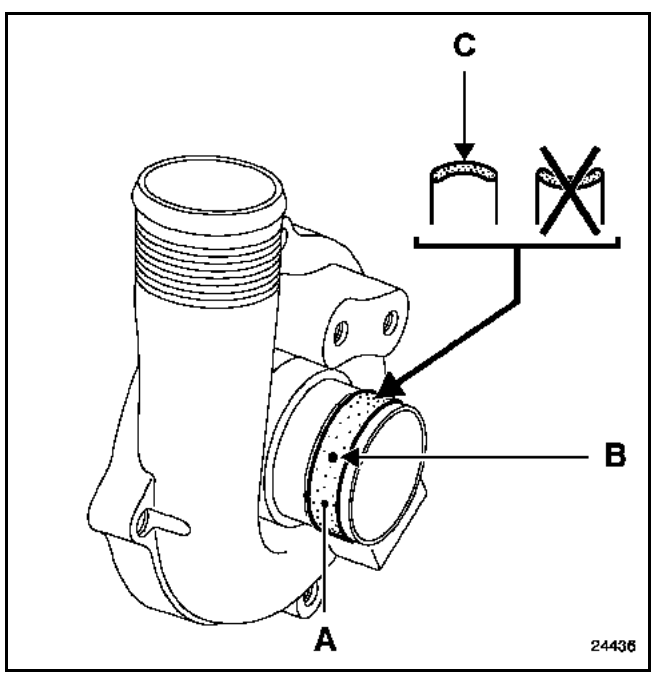

A – Sealing ring
B – Factory markings
C – Convex section of sealing ring

– Fit a new turbocharger air inlet duct (D):
  – Fit it fully in position.
  – Tighten the clip to a torque of **0.35 daNm**.

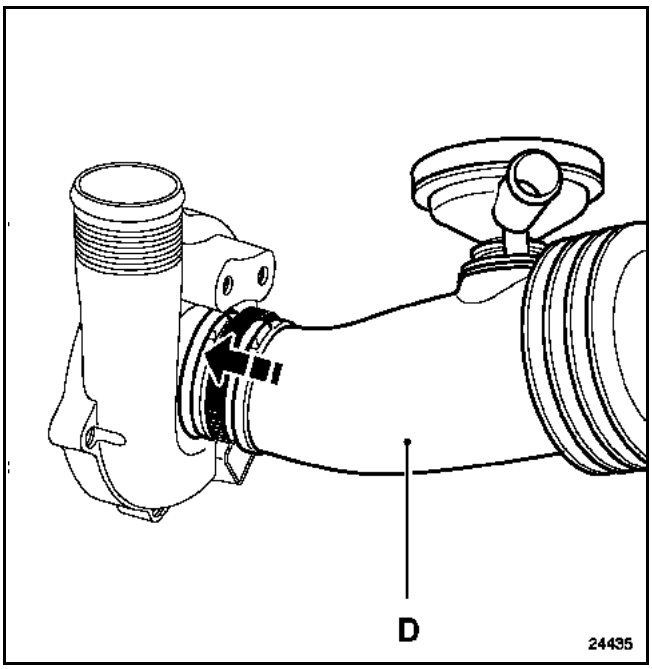

D – Air inlet duct

– Refit the removed components in the reverse order to removal.
– Reconnect the battery, starting with the positive terminal.

WARNING
Carry out the necessary programming according to the **Battery: advice** section in Technical Note 3682A.

– Carry out a simple road test.

CLAIM COMPLETION AND CODING

When to take action
– Upon receipt of a customer complaint.

Parts required

Quantity and description of parts		Part No.
1	Sealing ring	**82 00 363 123**
1	Air inlet duct	**82 00 280 084**

Time required

Code	Description	Time
7577	Fit sealing ring onto turbocharger	0.5
0145	Operational test	0.3
	TOTAL	**0.8**

Component codification

- **With PGCS**
– Catalogue function:

Description	Code
Turbocharger, inlet manifold, filter	**828**

– Cause reference: **82 00 363 123**

- **Without PGCS**
– NITG code: **M43F**

- **With or without PGCS**
– Supplier code: **050**
– Customer complaint code: **4D**

GREEN TECHNICAL NOTE
EDITION ANGLAISE

OCTOBER 2003
77 11 324 462

4383A
Service 00429

MEGANE II

Type

BMXX
CMXX

equipped with electric power assisted steering

36B SUMMARY OF ELECTRIC POWER ASSISTED STEERING FAULTS

Other sub-section concerned: **09A** **36A** **83A**

- Engine: **XXX**
- Gearbox: **XXX**

Basic manual:

Workshop Repair Manual: **364, 366**
Technical Note: **3700A**

THIS GREEN TECHNICAL NOTE SUMMARY IS AN EXCLUSIVE SUPPLEMENT TO THE DOCUMENTS ALREADY IN YOUR POSSESSION.

The following **MUST** be used for each operation:
- The relevant Workshop Repair Manuals specific to the operation.
- The fault finding log in Technical Note 3700A:
  You will always be asked for this log:
  – when requesting technical assistance from the Techline,
  – in the event of a parts replacement. The log is needed for warranty compensation, and enables better analysis of the removed parts.

"The repair methods given by the manufacturer in this document are based on the technical specifications current when it was prepared.

The methods may be modified as a result of changes introduced by the manufacturer in the production of the various component units and accessories from which his vehicles are constructed."

All copyrights reserved by RENAULT.

Copying or translating, in part or in full, of this document or use of the service part reference numbering system is forbidden without the prior written authority of RENAULT.

© RENAULT 2003

CUSTOMER COMPLAINT	FAULT FINDING	POSSIBLE CAUSE	AFTER-SALES SOLUTION
Loss of power assisted steering, the STOP warning light comes on and the "steering failure" message appears	Diagnostic tool displays the following fault codes: – DF002 – DF035 – DF054	PAS computer	Replace the column/PAS computer assembly
	Diagnostic tool displays the following fault code(s): – DF033 – DF057	PAS connections	Repair the connections in accordance with Workshop Repair Manual 366
	No dialogue with the PAS computer	Low battery voltage PAS connections PAS fuses	Follow the fault finding chart (ALP1) in Workshop Repair Manual 366
Loss of power assisted steering, the SERVICE warning light comes on permanently and the "check steering" message appears	No dialogue with the PAS computer	Low battery voltage PAS connections PAS fuses	Follow the fault finding chart (ALP1) in Workshop Repair Manual 366
Intermittent loss of power steering assistance or steering wheel does not turn smoothly but no warning light comes on and no warning message is displayed	Diagnostic tool does not display a fault code	Low battery voltage PAS connections PAS fuses	Follow the fault finding chart (ALP2) in Workshop Repair Manual 366
SERVICE warning light flashes then comes on permanently and the "check steering" message appears – If the vehicle is equipped with ESP: ESP warning light comes on and the "ASR shut down" message appears	Diagnostic tool does not display a fault code. Use the diagnostic tool to check whether the status ET020 shows "STATUS 1" or "STATUS 2".	Loss of steering wheel angle sensor programming	Program the steering wheel angle sensor in accordance with Workshop Repair Manual 366
The ESP and SERVICE warning lights come on permanently and the "ASR shut down" message appears	Use the diagnostic tool to check whether the status ET020 shows "STATUS 3"	Loss of steering wheel angle sensor programming following a battery disconnection	Program the steering wheel angle sensor in accordance with Workshop Repair Manual 366
Loss of power assisted steering during parking manoeuvres, the SERVICE warning light comes on permanently and the "check steering" message appears	Diagnostic tool displays the following fault code(s): – DF033 – DF057	Absence of vehicle speed signal	Repair the multiplex network in accordance with Workshop Repair Manual 366
Hissing in the event of a rapid steering wheel movement during parking manoeuvres	Diagnostic tool does not display a fault code		Inform the customer that this hissing (associated with how quickly the steering wheel is turned - more than one turn a second) has no effect on PAS operation

WORKSHOP FINDINGS	POSSIBLE CAUSE	AFTER-SALES SOLUTION
Diagnostic tool displays the following fault code: DF053	Computer configuration	Configure the computer in accordance with Workshop Repair Manual 366
Not possible to perform fault finding on the multiplex network using the diagnostic tool	Computer not configured	Apply + imposed after ignition feed (card + press and hold start button for 5 seconds). Disconnect the PAS power supply connector. Wait 5 seconds. Reconnect the PAS power supply connector.

MEGANE II

See list on next page

37A **BRAKE SERVO**
OTS: 0AAF MARK: B5

Other sub-section concerned: **999**

- Engine: **XXX**
- Gearbox: **XXX**

Basic manual:
Workshop Repair Manual: **364**

The vehicle cut-offs are given as guidelines only.
Before starting any work, it is ESSENTIAL to check that the vehicle is affected by OTS 0AAF

- **Countries with PGCS**

Network with ICM:	Refer to the list of OTS operations to be carried out in ICM.
Network without ICM:	If square **B5** on the blue label is not marked with a cross, contact your primary network who will check in the ICM. If square **A2** on the blue label is marked with a cross, the vehicle is affected and the operation has already been carried out through OTS 0AAG (NT 4327C).

- **Countries without PGCS**

All networks:	If square **B5** on the blue label is not marked with a cross, the vehicle is affected. If square **A2** on the blue label is marked with a cross, the vehicle is affected and the operation has already been carried out through OTS 0AAG (NT 4327C).

FRANCE

Members of the RENAULT Network who are qualified to apply this OTS:
- All of the network **except RENAULT Relais agents**

RENAULT Relais agent: should a customer come to your dealership, we would ask you to send them to a trained member of the RENAULT Network.

"The repair methods given by the manufacturer in this document are based on the technical specifications current when it was prepared.

The methods may be modified as a result of changes introduced by the manufacturer in the production of the various component units and accessories from which his vehicles are constructed".

All copyrights reserved by RENAULT.

Copying or translating, in part or in full, of this document or use of the service part reference numbering system is forbidden without the prior written authority of RENAULT.

© RENAULT 2004

LIST OF VEHICLES CONCERNED

Vehicle	Type	from	to
MEGANE II	BM0 B	D 000005	D 010956
		E 000021	E 008335
	BM0 C	D 000019	D 011494
		E 000001	E 008331
	BM0 F	D 000018	D 011491
		E 000003	E 008320
	BM0 G	D 000006	D 011496
		E 000015	E 008338
	BM0 H	D 000143	D 011397
		E 000183	E 004458
	BM0 J	D 000483	D 011372
		E 000136	E 008336

Vehicle	Type	from	to
MEGANE II	BM0 U	D 000084	D 011461
		E 000050	E 008076
	BM1 G	D 000728	D 011488
		E 000537	E 007277
	CM0 B	E 000008	E 008998
	CM0 C	E 000002	E 008985
	CM0 F	E 000001	E 008993
	CM0 G	E 000007	E 009001
	CM0 H	E 000336	E 002428
	CM0 J	E 000267	E 008994
	CM0 U	E 000078	E 008997
	CM1 G	E 001079	E 008916
	SM0 F	D 000001	D 000005

TECHNICAL INFORMATION

Preventive operation
– Replace the brake servo.

Description of the operation
- If square **A2** on the blue label is marked with a cross, the operation has already been carried out through OTS 0AAG (NT 4327C).
– Do not replace the brake servo but issue a request for reimbursement under warranty or an individual claim, depending on the country.

WARNING
The following procedure avoids the need to remove the master cylinder and bleed the brake circuit.
It is **ESSENTIAL** to follow it scrupulously.

REMOVAL
– Remove the covers.

WARNING
Switch off the engine.
Switch off all the electrical consumers.
Allow **1 minute** for the electronic systems to switch off.
Wait for the engine cooling fan to shut off completely.

– Disconnect the battery, starting with the negative terminal.
– Remove:
  – The battery.
  – The air resonator unit (only on K4J engine).
  – The battery tray.
  – The injection computer.
  – The air intake duct.
  – The air duct.
  – The air filter unit.
  – The brake pedal position switch on the pedal assembly.
– Drain the brake fluid reservoir using a syringe until the fluid level is below the level of the clutch master cylinder supply port.

Special notes on F9Q and K9K engines
– Remove:
  - The turbocharging regulation solenoid valve (F9Q engine only).
  - The EGR valve using tool **Part No. 77 11 381 729**
  - Both gearbox control ball joints.
  - The gearbox control cable sleeve stop support.
– Disconnect the brake fluid warning light connector.
– Remove the brake servo vacuum valve.
– Partially remove the soundproofing material from the bulkhead.
– Disconnect the clutch master cylinder pipe.
– Remove the gearbox upper control ball joint (except F9Q and K9K engines).
– From inside the passenger compartment, remove the brake pedal yoke pin from the brake servo pushrod.

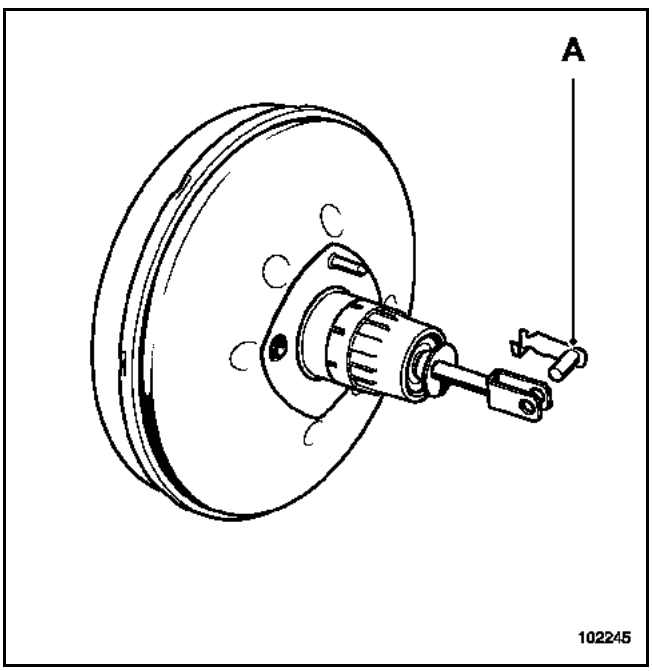

A – Brake pedal clevis pin

– Remove both nuts securing the master cylinder to the brake servo.
– Tilt the master cylinder forwards to disconnect it from the brake servo, taking care not to pinch the brake hoses.
– Remove both mounting bolts from the brake servo (B).

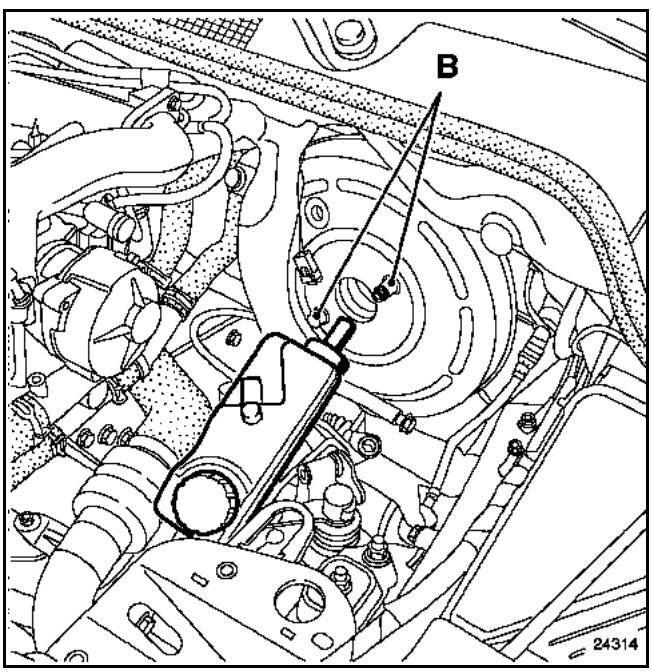

B – Brake servo mounting bolts

REFITTING
– Refit the new brake servo but do not fit the pushrod to it.
– Tighten both brake servo mounting bolts to a torque of **2.1 daNm**.
– Refit the master cylinder to the brake servo.
– Tighten both master cylinder nuts to a torque of **5 daNm**.
– Check the position and tightness of retaining clip (C) on the bulkhead, and the brake hoses in the clip.
– Check that separator clip (D) is present.

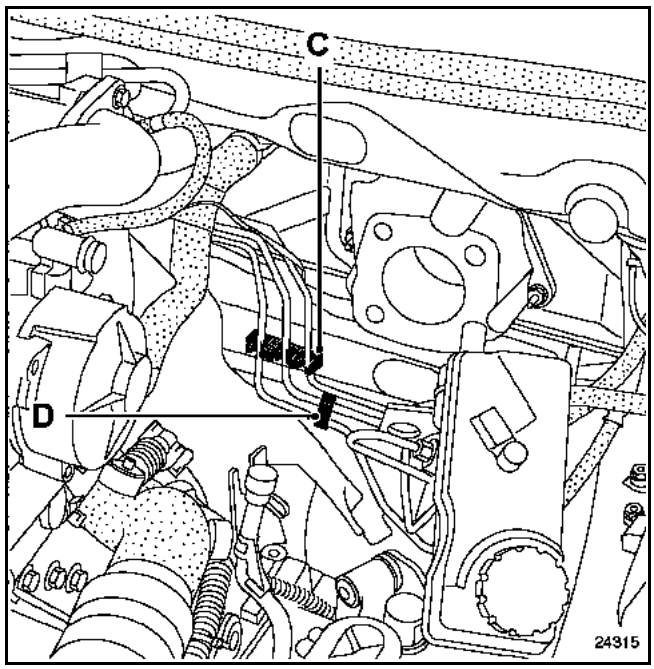

C – Retaining clip
D – Separator clip

– From inside the passenger compartment, position the pushrod on the brake servo and on the brake pedal.
– Depress the brake pedal to connect the pushrod and the servo.
– Refit the brake pedal yoke pin (A).

WARNING
Make sure that the brake pedal clevis pin locks on to the pushrod.

Preparing brake pedal position switch (E) before refitting.

Note: the brake pedal position switch has automatic adjustment which is adapted to the brake pedal position.

– It is ESSENTIAL to be careful when pulling the end of piston (F) on brake pedal position switch (E) to obtain measurement (**X**) of between **17 mm** minimum and **18 mm** maximum.

WARNING
– The switch must be replaced if the brake pedal position switch piston is extracted completely.
– The switch must be replaced if handling of the piston results in three adjustments being made.

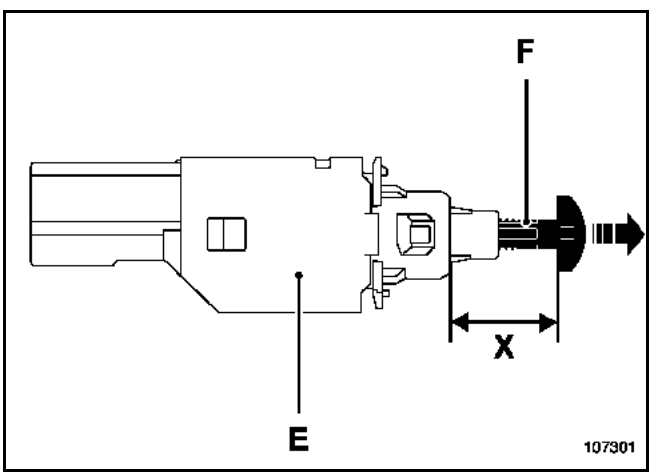

E – Brake pedal position switch
F – Adjustment piston
X – Adjustment measurement value of 17 mm to 18 mm

– Fully depress the brake pedal with your hand.
– Refit the brake pedal position switch to the pedal assembly and tighten it one quarter-turn clockwise.
– Release the pedal, following its travel with your hand.
– Connect the connector to the brake pedal position switch.
– Top up the brake fluid.
– Refit the removed components in the reverse order to removal.
– Reconnect the battery, starting with the positive terminal.
– Check the operation of the brake pedal position switch.

WARNING
Carry out the necessary programming according to the **Battery: advice** section in Technical Note 3682A or 6002A.

– Carry out a road test.

Marking the vehicle after work has been carried out
– Affix a blue label, **Part No.: 49 39 031 070**, to the driver's side front shock absorber turret.
– Tick square **B5** using a marker pen.

CLAIM COMPLETION AND CODING

When to take action
– The first time the vehicle is brought into the workshop.

Tooling required
– Conventional.
– 1 EGR valve removal tool **Part no. 77 11 381 729**

Parts required

Left-hand drive

Quantity and description of parts		Part No.
1	Brake servo kit	**77 01 208 000**

Right-hand drive

Quantity and description of parts		Part No.
1	Brake servo kit	**77 01 208 001**

Time required

If the brake servo has been replaced through OTS 0AAG

Code	Description	Time
0095	Vehicle checked	0.1
	TOTAL	**0.1**

All engines except K4J

Code	Description	Time
0096	Application of OTS	0.2
3161	Replacing the brake servo	1.1
0129	Basic road test	0.5
	TOTAL	**1.8**

K4J engine

Code	Description	Time
0096	Application of OTS	0.2
3240	Replacing the brake servo	0.8
0129	Basic road test	0.5
	TOTAL	**1.5**

Destination of removed parts
– **Other countries:** return to manufacturer.

Accounts procedure
– Request for reimbursement or individual claim, depending on the country.
– Nature of expense: **OTS**
– Expense code: **91**
– Parts at cost price.
– Labour at contractual warranty rate.
– Closure date: **31/12/2006**

OTS code: **0AAF**
(0 = Figure zero)

GREEN TECHNICAL NOTE
EDITION ANGLAISE

MARCH 2005
77 11 339 542

4519A
Service 00429

MEGANE & SCENIC

Type
XA0 1
XA0 5
XA0 8
XA0 N
XA1 F
XA1 U

LAGUNA

X56 J
X56 W

LAGUNA II

XG0 E
XG0 G
XG0 R

ESPACE IV

JK0 U
JK0 G

with an F9Q engine

12B MECHANICAL DAMAGE TO THE TURBOCHARGER

Other sub-section concerned: **09A** **13B** **83A**

- Engine: **F9Q**
- Gearbox: **XXX**

Basic manual:

Workshop Repair Manual: **Depending on vehicle**
Technical Note: **3938A, 6013A**

"The repair procedures given by the manufacturer in this document are based on the technical specifications current when it was prepared.

The procedures may be modified as a result of changes introduced by the manufacturer in the production of the various component units and accessories from which his vehicles are constructed".

All rights are reserved by RENAULT S.A.S.

Copying or translating, in part or in full, of this document or use of the service part reference numbering system is forbidden without the prior written authority of RENAULT S.A.S.

© RENAULT s.a.s. 2005

TECHNICAL INFORMATION

Customer complaint
- Engine noise.
- Loss of engine power.
- Injection warning light comes on.
- Exhaust smoke.
- Damage to the engine.

Possible cause
- Mechanical damage to the turbocharger.

Fault finding
- Confirm the customer complaint.
- Confirm the internal damage to the turbocharger.
- If the damage to the turbocharger is due to
  - damage to the bearings,
  - a rupture of the shaft,
  - the charger wheel rubbing on the turbocharger casing,
  - damage to the blades on the charger wheel.
- Apply the Technical Note.

Internal damage to the turbocharger leads to contamination in the air and oil circuits.

EXAMPLE OF DAMAGE

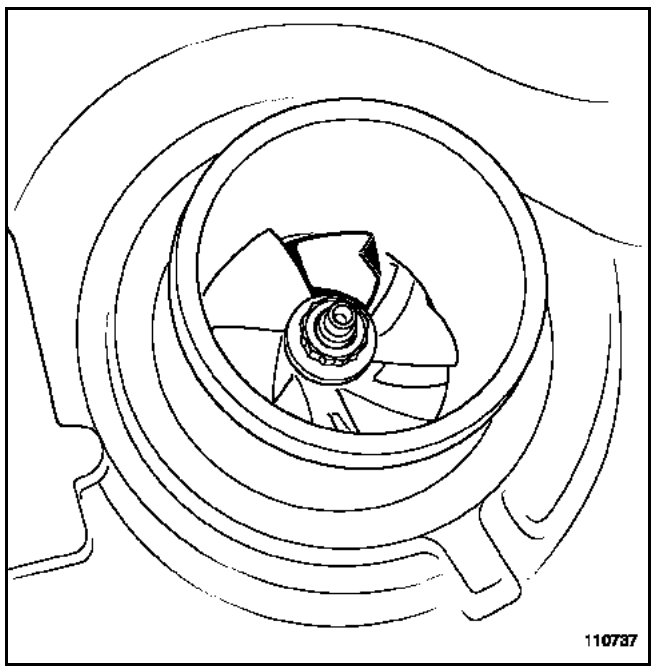

Damage to blade

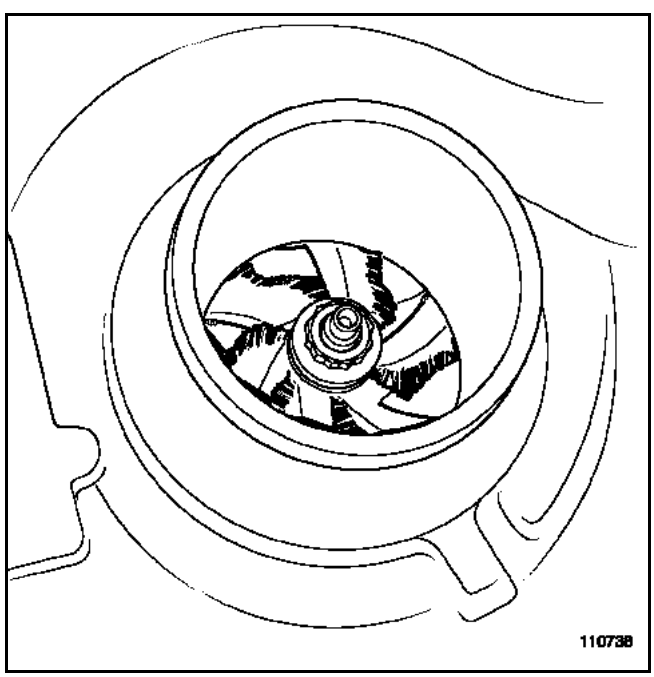

Damage to blades with contamination of air and oil circuits

Description of the operation

Without damage to engine

– Replace the turbocharger according to the Workshop Repair Manual.
– Apply the operations and follow the instructions contained within Technical Note **3938A**.

WARNING
In order to avoid any RECURRENCE of the complaint after replacement, ALWAYS apply the operations that are described in Technical Note 3938A:
– Clean air inlet ducts.
– Replace intercooler.
– Replace turbocharger upstream air duct.
– Change engine oil.
– Replace oil filter.
– Replace turbocharger oil supply and return pipes.
– Replace all removed seals.

With damage to engine

– Repair or replace the engine depending on its condition.
– Replace the turbocharger according to the Workshop Repair Manual.
– Apply the operations and follow the instructions contained within Technical Note **3938A**.

WARNING
In order to avoid any RECURRENCE of the complaint after replacement, ALWAYS apply the operations that are described in Technical Note **3938A**:
– Clean air inlet ducts.
– Replace intercooler.
– Replace turbocharger upstream air duct.
– Replace turbocharger oil supply and return pipes.
– Replace all removed seals.
Additional operation if engine repair is needed
– Change engine oil.
– Replace oil filter.

CLAIM COMPLETION AND CODING

When to take action

– Upon receipt of a customer complaint.

Parts required

Without damage to engine

Description	Miscellaneous code
Engine lubricant (5.3 L) according to Technical Note 6013A	**LU**

According to the Replacement Parts catalogue or Dialogys.

1	Turbocharger
1	Turbocharger upstream supply duct
1	Catalytic converter seal
1	Turbocharger oil supply pipe
1	Turbocharger oil return pipe
1	Turbocharger round oil seal kit
1	Ermeto metal seal
1	Oil filter

Depending on vehicle equipment

1	Intercooler
1	Flexonic union

With damage to engine

According to the Replacement Parts catalogue or Dialogys.

	Parts depending on engine condition

Time required

Without damage to engine

Code	Description	Time
0964	Replace turbocharger and clean turbocharging system	
	Mégane and Scénic	**5.4**
	Laguna	**4.4**
	Laguna II	**6.2**
	Espace IV	**5.5**

With damage to engine

Code	Description	Time
Replace depending on engine condition.		

Codification items

- **With PGCS**

– Catalogue function:

Description	Code
TURBOCHARGER, MANIFOLD, INLET, FILTER	**841**

– Cause reference: **Turbocharger depending on vehicle**

- **Without PGCS**

– NITG code: **M431**

- **With or without PGCS**

– Supplier code: **271**
– Customer complaint code: **1C, 2A, 7C, 7M, 7N, 9E**

GREEN TECHNICAL NOTE
EDITION ANGLAISE

MAY 2005
77 11 339 902

4540A
Service 00429

MEGANE II
SCENIC II

See list on next page

fitted with air conditioning

19A COOLANT LEAK FROM ENGINE RADIATOR

- Engine: **XXX**
- Gearbox: **XXX**

Basic manual:

Workshop Repair Manual: **364, 370**
Technical Note: **3857**

"The repair procedures given by the manufacturer in this document are based on the technical specifications current when it was prepared.

The procedures may be modified as a result of changes introduced by the manufacturer in the production of the various component units and accessories from which his vehicles are constructed".

All rights reserved by RENAULT S.A.S.

Copying or translating, in part or in full, of this document or use of the service part reference numbering system is forbidden without the prior written authority of RENAULT S.A.S.

© RENAULT s.a.s. 2005

LIST OF VEHICLES LIKELY TO BE AFFECTED

Vehicle	Type	from	to
MEGANE II	BM0 2	D 045517	D 145321
		E 145471	E 367876
	BM0 5	E 071322	E 367867
	BM0 F	D 000000	D 145317
		E 000003	E 367871
	BM0 G	E 252864	E 260367
	BM0 M	K 000001	K 001625
	BM0 U	D 000084	D 145216
		E 000050	E 367729
	BM0 W	D 120571	D 143309
		E 256163	E 359318
	BM1 1	K 000941	K 001601
	BM1 D	D 132774	D 138377
		E 338265	E 338265
	BM1 M	E 156422	E 360728
	BM1 N	D 054282	D 145274
		E 159188	E 367186
	CM0 2	E 046862	E 120695
	CM0 5	E 052044	E 120094
	CM0 F	E 000001	E 120688
	CM0 M	K 000001	K 004067
	CM0 U	E 000050	E 120663
	CM0 W	E 100558	E 120607
	CM1 1	K 001808	K 004056
	CM1 L	K 001920	K 003546
	CM1 M	E 058744	E 119049
	CM1 N	E 056374	E 120517
	EM0 5	D 017680	D 051936
	EM0 U	D 000001	D 052802
	EM0 W	D 000768	D 050673

Vehicle	Type	from	to
MEGANE II	EM1 N	D 005052	D 052737
	GM0 2	E 000948	E 008150
	GM0 F	E 000001	E 008152
	KM0 2	E 019247	E 141247
	KM0 F	E 000003	E 141228
	KM0 U	E 000004	E 141243
	KM1 D	E 110568	E 111253
	KM1 N	E 014950	E 141165
	LM0 2	R 015362	R 166648
	LM0 5	R 000615	R 166638
	LM0 F	R 000002	R 166644
	LM0 G	R 080677	R 080677
	LM0 T	R 054733	R 166216
	LM0 U	R 000007	R 166639
	LM1 D	R 131206	R 136276
	LM1 M	R 016338	R 165526
MEGANE II	LM1 N	R 004952	R 166558
	SM0 2	E 002676	E 007844
	SM0 F	D 000001	D 002352
		E 000001	E 007857
SCENIC II	JM0 2	D 000062	D 589461
	JM0 5	D 168965	D 589344
	JM0 F	D 000011	D 589455
	JM0 U	D 000006	D 589405
	JM0 W	D 129116	D 582640
	JM1 D	D 474709	D 553558
	JM1 N	D 034300	D 589296

TECHNICAL INFORMATION

Customer complaint
– Coolant leak from engine cooling radiator.

Possible cause
– The engine cooling fan shroud may be interfering with the engine cooling radiator.

Fault finding
– Pressurise the engine cooling circuit.
– Check that the coolant leak is between the cooling radiator and the engine cooling fan shroud.

Operation to be carried out
– Replacement of the engine cooling radiator.
– Fitting of two protective strips to the engine cooling fan shroud.

Description of the operation
– Replace the cooling radiator (**See MR 364 or 370, 19A**, Cooling).
– Fit the 2 protective strips to the engine cooling fan shroud (A) at (1) and (2).

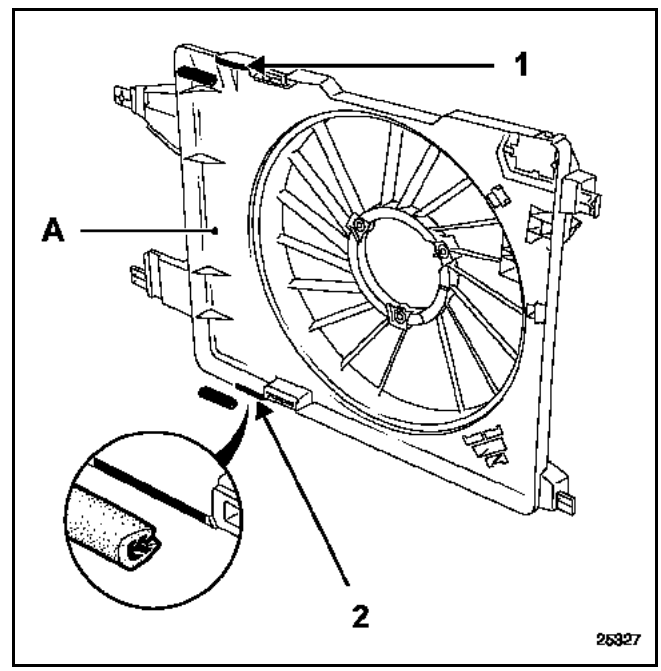

(1) (2) Location of the two protective strips
(A) Fan shroud

Note: always initialise the xenon bulbs system (if the vehicle is fitted with it (See **MR 364 or 370, 80C, Xenon bulbs, Xenon headlights: adjustment**).

CLAIM COMPLETION AND CODING

When to take action
– Upon receipt of a customer complaint.

Parts required

Quantity and description of parts		Part no.
1	Set of protective strips	**77 01 208 808**
1	5 litres of coolant	**77 11 170 546**

According to the Replacement Parts catalogue or Dialogys.

1	Cooling radiator

Tooling required
– **Car. 1363:** Mirror glass removal tool
– **Mot. 1202-01:** Clamp for hose clip (large version)
– **Mot. 1202-02:** Clamp for hose clip (small version)
– **Mot. 1448:** Extended clamp for plastic clip
– **Mot. 1700:** Fault finding and filling of the cooling circuit

Time required

K9K, F4R turbo and F9Q engines

Code	Description	Time
7657	Checking the cooling circuit tightness	0.2
According to TM	Draining - filling of the cooling circuit	According to TM
1308	Replacing the radiator	1.4
2468	For vehicles with intercoolers	0.1
0331	Vehicle programming	0.3

K4M, K4J, F4R engines

Code	Description	Time
7657	Checking the cooling circuit tightness	0.2
According to TM	Draining - filling of the cooling circuit	According to TM
1308	Replacing the radiator	1.4
0331	Vehicle programming	0.3

Additional operation for vehicles fitted with xenon bulbs

0330	Xenon lights programming	0.3

Codification items

- **With PGCS**

– Directory function:

Description	Code
Cooling, radiator, hoses	**069**

– Part No. (protective strip): **77 01 208 808**

- **Without PGCS**

– NITG code: **R210**

- **With or without PGCS**

– Supplier code: **012**
– Customer complaint code: **4G**

GREEN TECHNICAL NOTE
EDITION ANGLAISE

SEPTEMBER 2005
77 11 340 802

4559A
Service 00429

MEGANE II

Type

XM0 M
XM0 W
XM1 N
XMR G

SCENIC II

JM0 G
JM0 U
JM0 W
JM1 N
JMR G

with ND0 manual gearbox

Cancels and replaces Technical Note No. 4559A of JUNE 2005.
Modifications: Changes to technical solutions for SCENIC II vehicles.

21A GEARS JAMMING WHEN ENGAGING 2ND OR 3RD GEAR

Other subsection concerned: **37A**

- Engine: **XXX**
- Gearbox: **ND0**

Basic manual:
Workshop Repair Manual: **364 - 3 - 8**
370 - 3 - 8
Technical Note: **4429A**

"The repair procedures given by the manufacturer in this document are based on the technical specifications current when it was prepared.

The procedures may be modified as a result of changes introduced by the manufacturer in the production of the various component units and accessories from which his vehicles are constructed".

All rights reserved by RENAULT S.A.S.

Copying or translating, in part or in full, of this document or use of the service part reference numbering system is forbidden without the prior written authority of RENAULT S.A.S.

© RENAULT s.a.s. 2005

TECHNICAL INFORMATION

Customer complaint
Cold and warm:
– Gears jam when changing from 2nd or 3rd gear.
– Difficulty changing from 2nd gear to 3rd gear.

Possible cause
– Insufficient inertia from the control module to the manual gearbox (MTX).

Fault finding
– Confirm the customer complaint.

Operation to be carried out
– Replace the manual gearbox control module.

For SCENIC II vehicles
If the fault is still present:
– Replace the gear control.

CLAIM COMPLETION AND CODING

When to take action
– Upon receipt of a customer complaint.

Destination of removed parts
– In accordance with warranty directives.

Codification items

- **With PGCS**
– Directory function:

Description	Code
All types of gearbox	**164**

– Part no. concerned: **82 00 523 232**

- **Without PGCS**
– NITG code: **B21D**

- **With or without PGCS**
– Supplier code: **050**
– Customer complaint code **7K**

REPLACING THE CONTROL MODULE
- Remove
  - the air intake unit,
  - the battery plus its mounting,
  - the computer,
  - the air filter,
  - the MTX external control cables,
  - the 4 control module mounting bolts,
  - the gearshift stop bolt through the wheel arch.
- Remove the control module by lifting it vertically.
- Position the new integrated control module earth.

IMPORTANT
To prevent damaging the neutral switch:
- Tilt the control module towards the bulkhead, then align the unit to engage the neutral switch.

It will be easy to position the control module shaft in its housing.

- Tighten to torque the 4 new control module mounting bolts (**7.3 Nm**).
- Tighten to torque the new gearshift stop bolt, through the wheel arch (**28 Nm**).
- Refit the external control cables.
- Adjust the gearshift mechanism (see **Technical Note 4429A**).

IMPORTANT
The gearshift mechanism is adjusted in 3rd gear for MEGANE II vehicles and in 4th gear for SCENIC II vehicles.

- Refit the removed components in the reverse order to removal.
- Perform a basic road test.

Parts required

Quantity and description of parts		Part no.
1	Control module	**82 00 523 232**
4	Control module mounting bolts	**77 03 002 547**
1	Gearshift stop bolt	**32 18 18H 500**

Time required

MEGANE II

Code	Description	Time
3313	Replacing the control module	1.2
3198	Adjusting the gearshift control	0.6
0129	Basic road test	0.5
	TOTAL	**2.3**

SCENIC II

Code	Description	Time
3313	Replacing the control module	1.7
3198	Adjusting the gearshift control	0.6
0129	Basic road test	0.5
	TOTAL	**2.8**

SCENIC II ONLY

REPLACING THE GEARSHIFT CONTROL

– Replace the gearshift control (see **MR 370, 37A, Mechanical component controls, External gear control: removal - refitting**).
– Perform a basic road test.

Parts required

SCENIC II fitted with F9Q and F4R engines

Quantity and description of parts		Part no.
1	Gearshift control	**82 00 520 095**

SCENIC II fitted with F4Rt engine

Quantity and description of parts		Part no.
1	Gearshift control	**82 00 520 096**

Time required

Code	Description	Time
3197	Replacing the gearshift control	2.1
3198	Adjusting the gearshift control	0.6
0129	Basic road test	0.5
	TOTAL	**3.2**

GREEN TECHNICAL NOTE
EDITION ANGLAISE

AUGUST 2005
77 11 340 542

4572A
Service 00429

Type
XMX X

MEGANE II
SCENIC II

fitted with electric power assisted steering

36B STEERING RATTLING ON FULL LOCK

Other sub-section concerned: **09A** **36A**

- Engine: **XXX**
- Gearbox: **XXX**

Basic manual:
MR: **364, 370**

TECHNICAL INFORMATION

Customer complaint
– Steering rattling on full lock

Possible cause
– Play in the universal joint.

Fault finding
– Confirm the customer complaint with the vehicle stationary.
– Check the tightness of the steering on the sub-frame.
The Technical Note ONLY applies if the tightness of the steering on the sub-frame is to torque (**105 Nm**).

"The repair procedures given by the manufacturer in this document are based on the technical specifications current when it was prepared.

The procedures may be modified as a result of changes introduced by the manufacturer in the production of the various component units and accessories from which his vehicles are constructed".

All rights reserved by RENAULT S.A.S.

Copying or translating, in part or in full, of this document or use of the service part reference numbering system is forbidden without the prior written authority of RENAULT S.A.S.

© RENAULT s.a.s. 2005

Operation to be carried out
– Close the play in the universal joint.

Description of the operation

REMOVAL
– Remove
  – The steering column gaiter.
  – The universal joint nut and bolt.

APPLYING SILICONE BEADING
– Clean both the steering sprocket and the inside of the universal joint.
– Deposit 1 cm^3 of a mixture of silicone and hardener on yoke (A) at area (1).

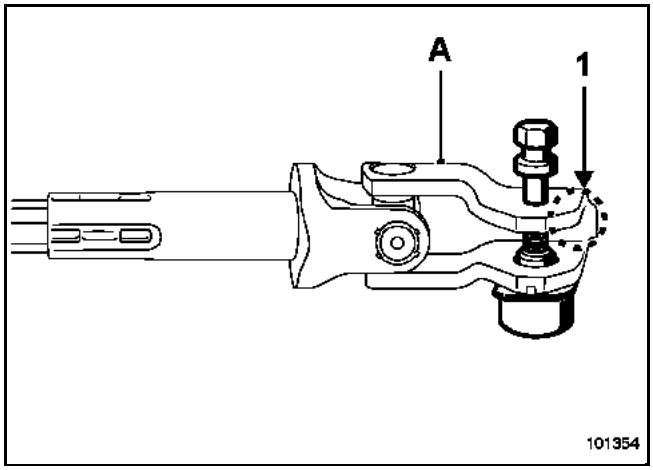

A – Yoke
1 – Silicone deposit area

REFITTING
– Refit the universal joint on the steering sprocket using a new nut and bolt.

Note: check there is no silicone on the threading of the bolt.

– Tighten to torque the universal joint nut (**28 Nm**).
– Refit the steering column gaiter.

IMPORTANT
It **MUST** be left to dry for 2 hours before the vehicle is moved.

CLAIM COMPLETION AND CODING

When to take action
– Upon receipt of a customer complaint.

Parts required

Quantity and description of parts		Part no.
1	Universal joint bolt	**77 03 602 097**
1	Universal joint nut	**77 01 052 817**
1	Tube of silicone	**77 01 404 452**
1	Hardener kit	**77 01 421 080**

Time required

Code	Description	Time
7662	SILICONE APPLICATION TO UNIVERSAL JOINT	0.5
	TOTAL	**0.5**

Destination of removed parts
– In accordance with warranty directives.

Codification items

- **With PGCS**
– Directory function:

Description	Code
STEERING, COLUMN, RACK, POWER STEERING	**048**

– Cause reference: **77 03 602 097**

- **Without PGCS**
– NITG code: **L22J**

- **With or without PGCS**
– Supplier code: **050**
– Customer complaint code: **2D**

GREEN TECHNICAL NOTE
EDITION ANGLAISE

OCTOBER 2005
77 11 340 842

4582A
Service 00429

	Type
MODUS	**XPX X**
CLIO 2	**XBX X**
KANGOO	**XCX X**
MEGANE II	**XMX X**
SCENIC II	**XMX X**
LAGUNA II	**XGX X**
MEGANE	**XAX X**
SCENIC	**XAX X**
LAGUNA	**X56 X**

with K4J – K4M – K9K engines

16A NOISE IN ENGINE COMPARTMENT AND/OR BATTERY CHARGE WARNING LIGHT ON

Other sub-section concerned: **09A** **80A** **87A**

- Engine: **K4J, K4M, K9K**
- Gearbox: **XXX**

Basic manual:
Workshop Repair Manual: **Depending on vehicle**
Technical Note: **3904A, 5008A**

"The repair procedures given by the manufacturer in this document are based on the technical specifications current when it was prepared.

The procedures may be modified as a result of changes introduced by the manufacturer in the production of the various component units and accessories from which his vehicles are constructed".

All rights reserved by RENAULT S.A.S.

Copying or translating, in part or in full, of this document or use of the service part reference numbering system is forbidden without the prior written authority of RENAULT S.A.S.

© RENAULT s.a.s. 2005

TECHNICAL INFORMATION

Customer complaint
– Squealing noise from engine compartment and/or battery charge warning light on instrument panel lit.

Possible cause
– Alternator pulley loose or damaged.
– Alternator pulley detached.

Fault finding
– Confirm the customer complaint.
– Check whether the alternator pulley is damaged.

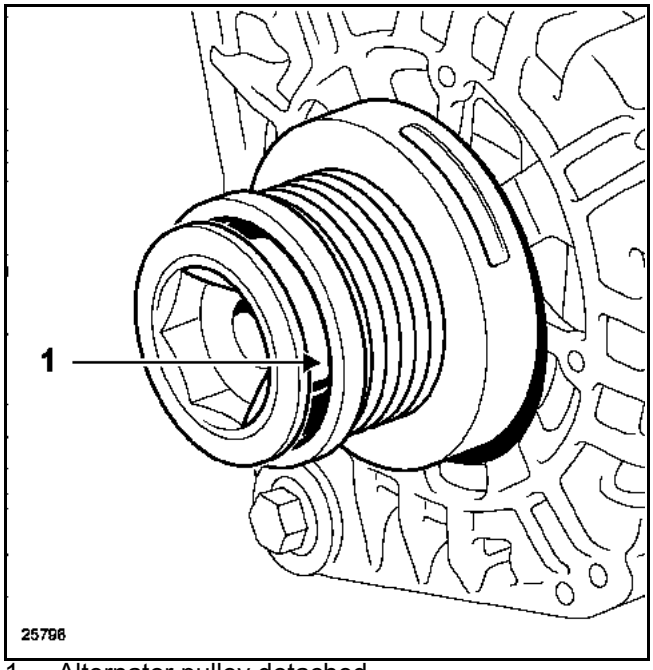

1 – Alternator pulley detached

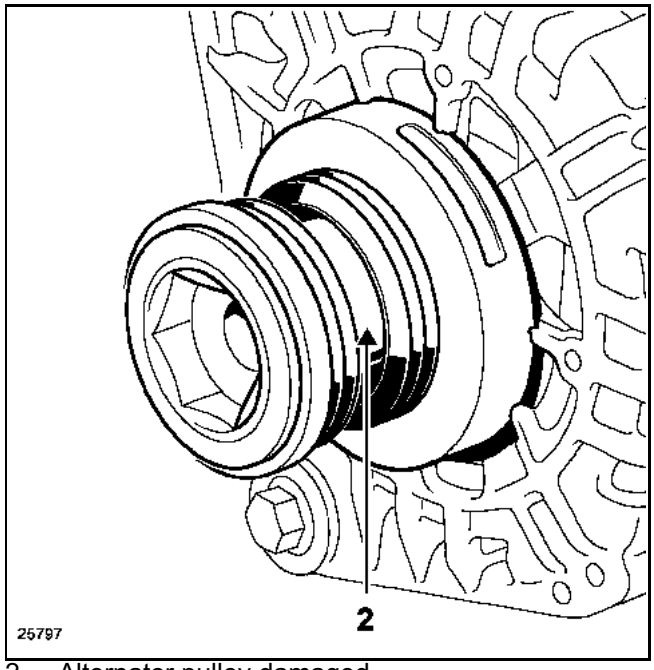

2 – Alternator pulley damaged

– Check that there is no accessories belt debris in the timing belt that could damage the engine.

Operation to be carried out
Depending on the result of the check:
– Replace the alternator pulley.
– Replace the alternator.

Description of the operation
– Check the condition of the alternator casing:
- If the alternator casing is not damaged at (3):
  – Replace the alternator pulley, the accessories belt, the accessories belt tensioning roller and the tensioning roller mounting bolt(s).

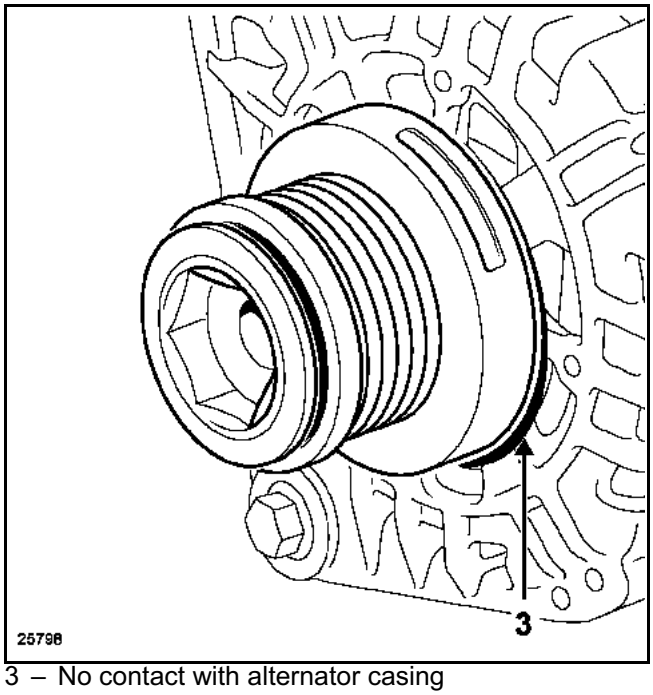

3 – No contact with alternator casing

REPLACEMENT OF THE ALTERNATOR PULLEY
– Disconnect the battery (see **MR for vehicle**).
– Remove the alternator (see **MR for vehicle**).
– Check (4) the marking of the alternator pulley to be replaced (see **correspondence chart** page 16A-6).
Note: the alternator pulley part number is stamped on the alternator pulley flange.

Note: for pulleys with part number **77 00 110 616**, the marking on the pulley may be **10 616**.

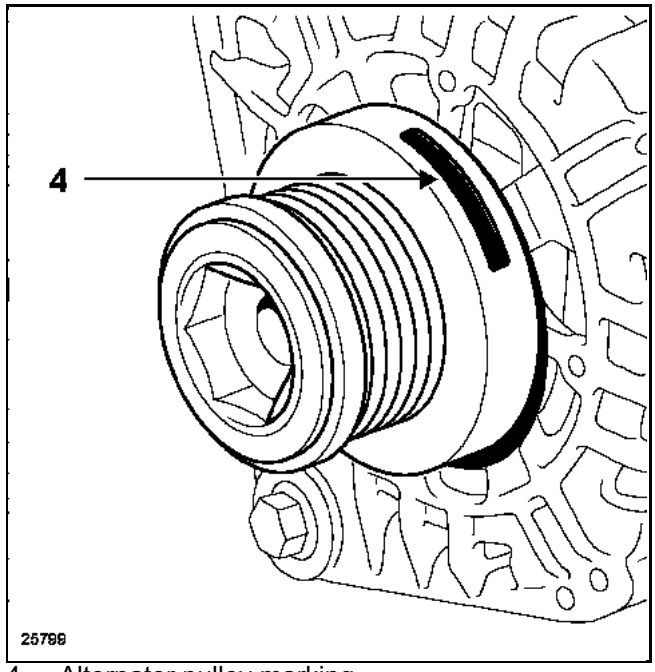

4 – Alternator pulley marking

– Replace the alternator pulley with a new one (see **Technical Note 3904A** or **5008A**).
– Refit the alternator (see **MR for vehicle**).
– Replace the accessories belt, the accessories belt tensioning roller and the roller mounting bolt(s) in accordance with the type of passenger compartment heating.
– Reconnect the battery (see **MR for vehicle**).
– Check the charging circuit.
– Perform a basic road test.

- If the alternator casing is damaged due to contact with the alternator pulley:
  - Replace the alternator, the accessories belt, the accessories belt tensioning roller and the roller mounting bolt(s) (see **MR for vehicle** and **Technical Note 3904A** or **5008A**).

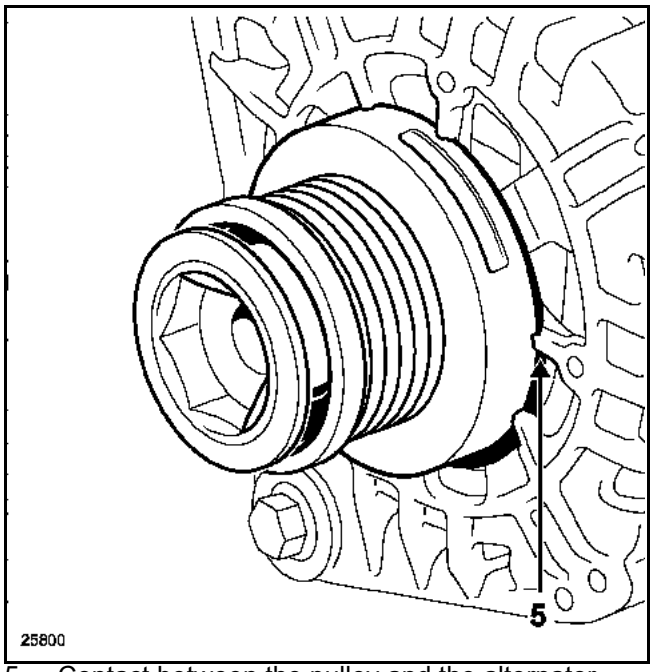

5 – Contact between the pulley and the alternator casing

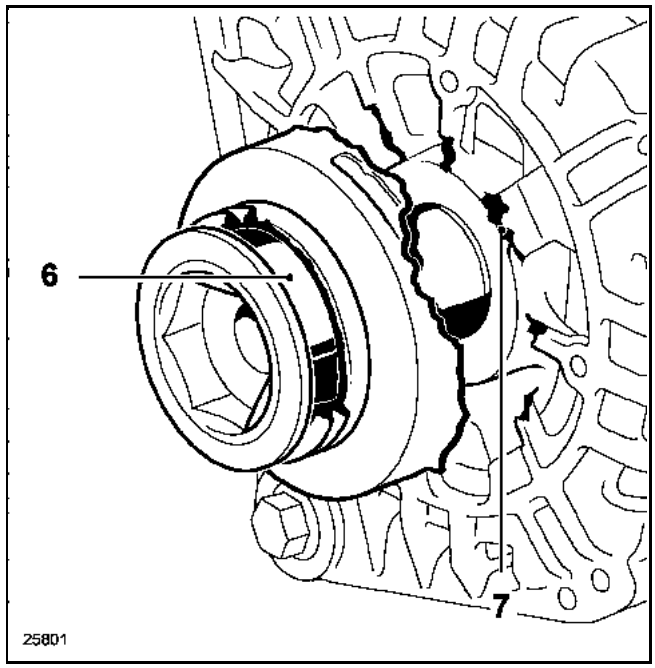

6 – Pulley dislodged
7 – Casing damaged

CLAIM COMPLETION AND CODING

When to take action
– Upon receipt of a customer complaint.

Parts required

According to correspondence chart

Quantity and description of parts		Part no.
1	Alternator free wheel pulley	**77 01 476 465**
	or	
1	Decoupler pulley	**82 00 113 636 or 77 00 110 616**

If alternator casing damaged
According to the Replacement Parts Catalogue or Dialogys.

1	Alternator

Parts ALWAYS to be replaced
According to the Replacement Parts Catalogue or Dialogys.

1	Accessories belt
1	Accessories belt tensioning roller
2	Mounting bolt

Tooling required
– Conventional.
– Mot. 1732.

Time required

Code	Description	Time
According to operation time	Removal-refitting of alternator including replacing and adjusting accessories belt	depending on Labour Time
0963	Replacing alternator pulley not including removal-refitting of alternator	0.2
0331	Programming vehicle after disconnecting battery (clock, radio, etc.)	depending on operation time
0317	Battery/charge test	0.5
0129	Basic road test	0.5
	TOTAL	**depending on operation time**

Destination of removed parts
– In accordance with warranty directives.

Codification items

- **With PGCS**
– Directory function:

Description	Code
ALTERNATOR, STARTER, PULLEY AND BELT ONLY	**309**

– Cause part number: **Alternator pulley**
in accordance with Parts Catalogue or Dialogys

- **Without PGCS**
– NITG code: **E129**

- **With or without PGCS**
– Supplier code: **164**
– Customer complaint code: **1C, 1D, 2C,**

APPENDIX
Correspondence table

Engine type	Vehicle	Note	Part number of alternator pulley originally fitted	Part number of alternator pulley fitted in After-Sales
K9K	CLIO 2	Without air conditioning (Mitsubishi alternator)	82 00 113 636	77 01 476 465
	KANGOO			
	ALL TYPES	5-tooth accessories belt	82 00 113 636	82 00 113 636
K4J K4M	CLIO 2	None	82 00 113 636	82 00 113 636
	MODUS			
	MEGANE II			
	SCENIC II			
	CLIO 2	None	77 00 110 616	77 00 110 616
	KANGOO			
	MEGANE			
	SCENIC			
	LAGUNA			
	LAGUNA II			

Alternator pulley part number	Pulley type
77 00 110 616 82 00 113 636	Decoupler pulley
77 01 476 465	Free wheel pulley

GREEN TECHNICAL NOTE
EDITION ANGLAISE

SEPTEMBER 2005
77 11 340 742

4901A
Service 00429

	Type
CLIO 2	XBX X
MEGANE II Phase 1 & SCENIC II Phase 1	XMX X
LAGUNA II Phase 1	XG0 X
ESPACE IV Phase 1	JK0 X
VEL SATIS Phase 1	BJ0 X
MEGANE & SCENIC	XAX X
AVANTIME	DE0 X
TRAFIC II	XLX X
MASTER 2	XDX X

Cancels and replaces Technical Note No. 4129A dated AUGUST 2001.
Modifications: Extension of vehicle types and development of the technical solution.

83C SUMMARY OF MAJOR FAULTS CONCERNING CARMINAT INFORMED NAVIGATION HIGH END

- Engine: **XXX**
- Gearbox: **XXX**

Basic manual:
Technical Note: **3700A, 3729A**
Driver's handbook: **Carminat Informed Navigation**

"The repair procedures given by the manufacturer in this document are based on the technical specifications current when it was prepared.

The procedures may be modified as a result of changes introduced by the manufacturer in the production of the various component units and accessories from which his vehicles are constructed".

All rights reserved by RENAULT S.A.S.

Copying or translating, in part or in full, of this document or use of the service part reference numbering system is forbidden without the prior written authority of RENAULT S.A.S.

© RENAULT s.a.s. 2005

WARNINGS:

This document does **not concern the new "Carminat Navigation and Communication" multimedia system** released at the start of 2005 on Laguna 2 phase 2 and Vel Satis phase 2.

Before attempting to find a solution to a fault, check that it is not caused by incorrect use. To do this consult the "Carminat Informed Navigation" Owner's Manual and the Repair Manual.

AIM OF THE TECHNICAL NOTE

To list the **most common** faults and the associated After-Sales solutions in order to facilitate repair.

FAULT FINDING LOG

IMPORTANT
Any incident involving a complex system must undergo a thorough fault finding procedure with the appropriate tools.
The **FAULT FINDING LOG**, which should be completed during the fault finding procedure, enables you to keep track of the procedure which is carried out. It is an essential document when consulting the manufacturer.

IT IS THEREFORE COMPULSORY TO FILL OUT A FAULT FINDING LOG EVERY TIME A FAULT FINDING OPERATION IS PERFORMED.

You are always asked for this sheet:
- for Technical Assistance requests,
- for approval requests when replacing parts for which approval is obligatory,
- to be enclosed when returning monitored parts on request.

The sheet is needed for warranty compensation, and enables better analysis of the parts removed.

CONTENTS

CUSTOMER COMPLAINT	page
Screen permanently black	83C-4
Screen remains black on starting (intermittent)	83C-5
Road map freezes and turns grey or black (intermittent)	83C-6
Display frozen on RENAULT badge or no display	83C-7
Incorrect vehicle position on map and permanent red GPS symbol in status bar	83C-8 83C-9
Not possible to change language	83C-10
Voice synthesiser does not work	83C-11

APPENDICES	
Navigation computer part number/Language CD version correspondence table	83C-12
Fault finding log (FD)	83C-13
System: Carminat Informed Navigation - FD 98	83C-14

Screen black

CUSTOMER COMPLAINT	Screen permanently black

FAULT FINDING	Check that: – the Carminat computer red indicator light is off, – the Eject button indicator is on.
POSSIBLE CAUSE	Navigation computer freezes following interruption of the language changing or software changing procedure (language CD ejected by user and/or mapping CD inserted during procedure).
AFTER-SALES SOLUTION	Check for CD jammed in navigation computer • If no CD jammed in navigation computer – With the ignition off, reinsert the language CD and switch on the ignition without starting the engine, The procedure progresses normally. – Wait approximately 1 minute with the screen still black. The following message appears: **The installation program will update your system** The procedure ends (5 minutes maximum) **Note:** if the language CD is quickly ejected with the message "CD ERROR", try another language CD and check the CD version using the correspondence table (see appendix). • If a CD is jammed in the navigation computer (e.g.: mapping CD) – Do not try to remove it. – Replace the navigation computer.

COMMENTS	If the fault is still present, continue fault finding (see **Technical Note 3729A, 83C, ON-BOARD TELEMATICS SYSTEM, Fault finding chart: ALP 3**).

Screen black

CUSTOMER COMPLAINT	Screen remains black on starting (intermittent).

FAULT FINDING	– Confirm the customer complaint.
POSSIBLE CAUSE	Software limitation (occurrence approximately 1 fault per 100 start-ups).
AFTER-SALES SOLUTION	– Recommend that the customer switch off the ignition for a minute when the fault occurs.

Screen black

CUSTOMER COMPLAINT	Road map freezes and turns grey or black. The fault occurs intermittently. Note: in some cases the display shows abnormal colours and the display functions are frozen.

INFORMATION	It is normal for the screen to shut down (system refreshing/appearance of Renault badge) approximately every 3,000 miles (5,000 km).

FAULT FINDING	– Confirm the customer complaint.
POSSIBLE CAUSE	– Traces of dirt or scratches on the mapping CD. – Navigation computer internal fault.
AFTER-SALES SOLUTION	– Clean the CD to remove any dust or finger marks. – Use a soft, clean, dry, lint-free cloth. – Wipe the CD from the centre outwards. Replace the mapping CD if it is scratched. If the fault is still present: – Replace the navigation computer.

COMMENTS	If the fault is still present, continue fault finding (see **Technical Note 3729A, 83C, ON-BOARD TELEMATICS SYSTEM, Fault finding chart: ALP 3**).

Display frozen

CUSTOMER COMPLAINT	Display frozen on the RENAULT badge or no radio display.

FAULT FINDING	– Confirm the customer complaint.
POSSIBLE CAUSE	Navigation system initialisation incomplete or not carried out.
AFTER-SALES SOLUTION	– Initialise the navigation system (see **Technical Note 3729A, 83C, ON-BOARD TELEMATICS SYSTEM, Initialisation**).

COMMENTS	If the fault is still present, continue fault finding (see **Technical Note 3729A, 83C, ON-BOARD TELEMATICS SYSTEM, Fault finding chart: ALP 4**).

CUSTOMER COMPLAINT	Incorrect vehicle position on the map and a red GPS symbol permanently displayed in the status bar.

NOTES	When using the system for the 1st time, park the vehicle in the open air with the ignition on. It will take approximately twenty minutes to achieve good reception (green GPS symbol). It is recommended that you carry out the fault finding process outside to ensure good GPS reception. Wait a few minutes after each operation, and before checking the GPS symbol, to allow the system to receive GPS signals.

FAULT FINDING	– Confirm the customer complaint. – Check the GPS aerial cable connections: • behind the computer. • at the cut-off plate. • at the aerial pillar.
POSSIBLE CAUSE	Cable connector(s) of GPS aerial disconnected.
AFTER-SALES SOLUTION	– Reconnect the connector(s).

If the fault is still present

FAULT FINDING	– Check the GPS reception status using the following path: Navigation, Configuration, System information, Fault finding. – Enter code **4112**. – Read the GPS data and check that the sensor's STAT display is: **COMM ERROR**.
POSSIBLE CAUSE	Faulty Carminat computer.
AFTER-SALES SOLUTION	– Change the Carminat computer.

If the fault is still present see next page

CUSTOMER COMPLAINT (continued)	Vehicle position on the map incorrect and a red GPS symbol permanently displayed in the status bar.

FAULT FINDING	– Check the GPS reception status using the following path: Navigation, Configuration, System information, Fault finding. – Enter code **4112**. – Read the GPS data and check that the sensor's STAT display is: **SEARCH SAT** or **REC ERROR**.
POSSIBLE CAUSE	Faulty aerial cable or GPS aerial.
AFTER-SALES SOLUTION	– Fit an external coaxial cable connecting the computer to the cut-off plate connector: • If the GPS symbol turns **green**: – Replace the GPS aerial cable between the computer and the cut-off plate connector. • If the GPS symbol remains **red** and the vehicle has a roof aerial: – Replace the roof aerial. • If the GPS symbol remains **red** and the vehicle does not have a roof aerial: – Fit an external coaxial cable connecting the cut-off plate connector to the GPS aerial pillar: • If the GPS symbol turns **green**: – Replace the GPS aerial cable between the cut-off plate connector and the aerial pillar. • If the GPS symbol remains **red**, – Replace the GPS aerial (behind the tailgate upper trim).

COMMENTS	If the fault is still present, continue fault finding (see **Technical Note 3729A, 83C, ON-BOARD TELEMATICS SYSTEM, Fault finding chart: ALP 16**).

CUSTOMER COMPLAINT	Not possible to change language.

NOTES	**IMPORTANT:** do not start the engine during the procedure. In the event of freezing during the procedure, see customer complaint: Screen permanently black.

FAULT FINDING	– Confirm the customer complaint. – Check the CD version (see correspondence table in Appendix).
POSSIBLE CAUSE	Language change procedure not correctly followed.
AFTER-SALES SOLUTION	– Switch on the + accessories feed Changing language is a two-step process: **Step 1:** – Change the language in the **Main** menu. – In the **Main** menu, select **Language** => choose the language and confirm. **Step 2:** – Change the language in the **Navigation** menus. – Use the path: **Navigation, Configuration, Languages** (following the items preceded by a *): 1st case: The language is one of the two displayed: select the desired language and confirm. 2nd case: The language is not displayed: a) Select **Other language**. b) The message **insert Languages CD** appears. c) Eject the mapping CD, insert the Languages CD and confirm. **Note:** if the system asks you to install new software, select **No** and start the language changing procedure again. d) Select the language to replace. e) Select the language to load from the list, then select **Load**. **IMPORTANT:** loading takes approximately 5 minutes. The screen may remain black for several minutes. Do not interrupt the loading procedure (ignition switch-off or CD ejection) f) After the Languages CD has been ejected, wait for the screen to go blank and the **Renault badge** to be displayed. g) Reinsert the mapping CD. h) Repeat step 2 above.

Voice synthesiser does not work

CUSTOMER COMPLAINT	Voice synthesiser does not work.

FAULT FINDING	– Confirm the customer complaint.
POSSIBLE CAUSE	Carminat speaker connector not connected.
AFTER-SALES SOLUTION	– Reconnect the Carminat speaker connector.

COMMENTS	If the fault is still present, continue fault finding (see **Technical Note 3729A, 83C, ON-BOARD TELEMATICS SYSTEM, Fault finding chart: ALP 14**).

NAVIGATION COMPUTER PART NUMBER/LANGUAGE CD VERSION CORRESPONDENCE TABLE

Languages CD (example of version 4.5)

Navigation computer part numbers (in horizontal position)	Navigation computer part numbers (in vertical position)	Languages CD version to use
Vehicles concerned: AVANTIME/LAGUNA II/ VEL SATIS/ESPACE IV/ MEGANE / SCENIC/ SCENIC II/ TRAFIC II/MASTER 2	Vehicles concerned: MEGANE II & CLIO 2	
8200130524 8200138591	8200084643 8200139714	NAV5 – All versions
8200149801 8200280671	8200163083 8200280670	NAV5 – All versions or NAV5 – Version 4.5
8200313631	8200313889	NAV5 – Version 4.6
8200339751	8200338534	NAV6 – Version 1

FAULT FINDING LOG

System: Carminat informed navigation

List of monitored parts: ***navigation system***

- **Administrative identification**

Date	2 0
Log completed by/tel.	
Dealership details	
VIN	km
Repair Order	Engine

- **Navigation system configuration**

Navigation computer	Renault part number:	
	series number	FAULT FINDING LOG
CCU: Central Communication Unit	Renault part number:	
	series number	FAULT FINDING LOG
Mapping CD-ROM	Renault part number:	
	series number	FAULT FINDING LOG
Languages CD-ROM	Version	
Radio	Renault part number:	
	series number	FAULT FINDING LOG

- **Customer complaint**

	1162	Problem reading the mapping CD-ROM		1161	Problem opening or closing the screen		1158	Guidance voice message fault
	1170	Navigation guidance fault		1160	Control fault on the CCU front panel or independent console		1171	Satellite reception fault (GPS)
	999	Intermittent black screen		999	Permanent black screen		999	Location fault

Description of customer complaint:

Customer complaint reproduced:	YES ❑	NO ❑
Are there any retrofitted accessories on the vehicle:	YES ❑	NO ❑
If yes, which:		

- **Conditions under which the customer complaint occurs**

	999	Permanent fault		999	Intermittent frequency (occurrence must be stated)		999	Low temperature conditions
	999	Very high temperatures		999	Ambient heat		999	Engine running or warm
	999	When starting		999	Covered area (garage, etc.)		999	Green TMC symbol
	999	Red TMC Symbol		999	Green GPS Symbol		999	Red GPS Symbol
	999	During impacts / vibrations		999	Green CD Symbol		999	Red CD Symbol

Others

Comments:

RENAULT

FD98
Fault finding log

FAULT FINDING LOG

System: Carminat informed navigation

- **Documentation used in fault finding**

Fault finding procedure used			
Type of diagnostic manual:	Workshop Repair Manual ❑	Technical Note ❑	Assisted fault finding ❑
Diagnostic manual number			
Wiring diagram used			
Wiring Diagrams Technical Note Number:			
Other documentation			
Title and/or part number:			

- **Workshop fault finding**

GPS reception status:	COM.ERROR ❑	Search Sat ❑	≥ 3 sat ❑

To check the GPS reception status, follow the procedure below:

Position the vehicle in an open area
Wait for 15 minutes with the ignition on
In the navigation system, go to Fault finding: **Navigation → Configuration → System information → Fault finding→ GPS status**

Red status LED computer front panel:	Permanently off ❑	Permanently flashing ❑	Permanently lit ❑
Carminat computer (CD-ROM reader):	Impossible to insert CD ❑	Impossible to eject CD ❑	Refuses to read CD ❑
Mapping CD scratched or dirty:	YES ❑	NO ❑	

Vehicle speed signal fault finding, change of value when driving? ❑ YES ❑ NO
Carry out this fault finding in the navigation system, from the following fault finding menu: **Navigation → Configuration → System information → Fault finding → I/O**

- **Conditions under which fault disappears**

❑ Vehicle restart
after a cut-off of > 1 min: OUT ❑ NO ❑
after a cut-off of < 1 min: YES ❑ NO ❑
❑ By action on: .....
.....
❑ The fault disappears by itself (state time):.....
❑ Other (give as much detail as possible): .....
.....

- **Parts returned**

Parts:	Navigation computer ❑	CCU ❑	Console ❑	Screen ❑

Note:
Complete and submit a fault finding log for each component removed and returned.

RENAULT

page to print or photocopy - page to print or photocopy - page to print or photocopy

RENAULT

Technical Note 5007A

X40 - X74, and DOCUMENT PHASE 2 - X77, and J77 - X90 - X84, and J84 - X84, and B84 - X76, and RENAULT - XTP - X56 - X54 - X48 - X64 - X57

Fuel tank gauge assembly

RENAULT 5: X40X - EXPRESS: F40X

KANGOO Phase II: XCXX

CLIO I: X57X

RENAULT 21: X48X

MODUS: XPXX

LOGAN: LSXX

MEGANE I: XAXX - MEGANE II: XMXX

SCENIC I: JAXX - SCENIC II: JMXX

LAGUNA I: X56X - LAGUNA II Phase II: XGXX

SAFRANE: X54X

TRAFIC I: XTP

77 11 343 442 **AUGUST 2005** **Edition Anglaise**

"The repair methods given by the manufacturer in this document are based on the technical specifications current when it was prepared.

The methods may be modified as a result of changes introduced by the manufacturer in the production of the various component units and accessories from which his vehicles are constructed."

All copyrights reserved by Renault.

The reproduction or translation in part of whole of the present document, as well as the use of the spare parts reference numbering system, are prohibited without the prior written consent of Renault.

© Renault s.a.s. 2005

Sub-section concerned: 19C

Procedure for removal of fuel tank gauge assembly.

77 11 343 442 AUGUST 2005 Edition Anglaise

"The repair methods given by the manufacturer in this document are based on the technical specifications current when it was prepared.

The methods may be modified as a result of changes introduced by the manufacturer in the production of the various component units and accessories from which his vehicles are constructed."

All copyrights reserved by Renault.

The reproduction or translation in part of whole of the present document, as well as the use of the spare parts reference numbering system, are prohibited without the prior written consent of Renault.

© Renault s.a.s. 2005

Fuel tank gauge assembly

Contents

Page

19C **RESERVOIR**

Sender unit: Removal - Refitting 19C-1

Pump-sender unit-filter: Removal - Refitting 19C-18

X84, and J84, and F9Q or K9K or M9R

Special tooling required	
Mot. 1397	Universal spanner for removing fuel gauge nut

Tightening torques ▽	
battery cover mounting bolts	**4 Nm**

IMPORTANT

During this operation:

- refrain from smoking or bringing red hot objects close to the working area,
- beware of fuel splashes when disconnecting the unions,
- protect sensitive areas from fuel outflow.

REMOVAL

Disconnect the battery, starting with the negative terminal.

Remove the rear seats (see **MR 371 Bodywork, 76A, Rear seat runners and frames, Second row complete rear seat**).

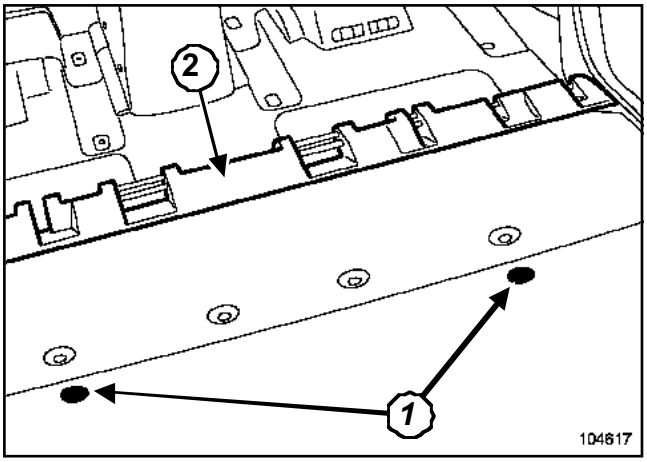

104617

Remove:

- the clips (**1**),
- trim (**2**).

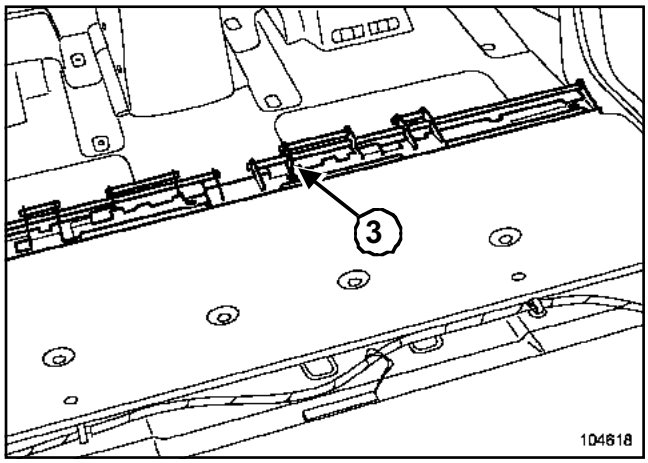

104618

Remove the seat mountings (**3**).

Move the carpet to one side.

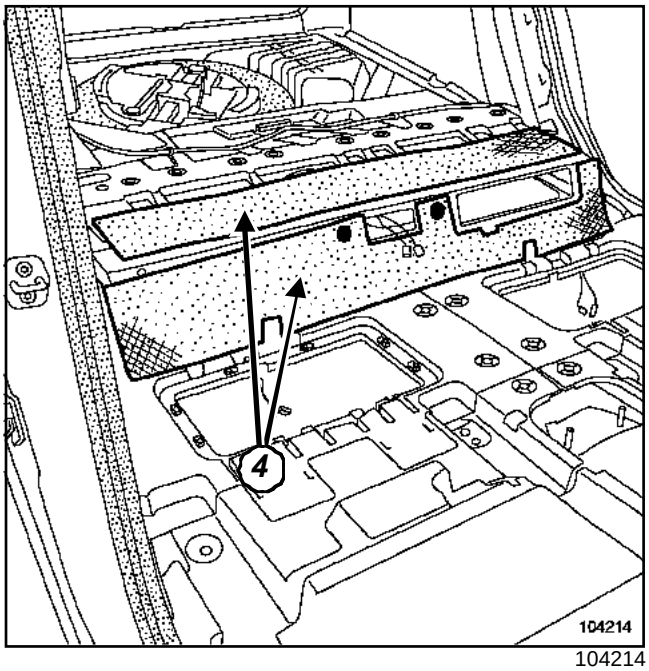

104214

Remove the soundproofing pads (**4**).

X84, and J84, and F9Q or K9K or M9R

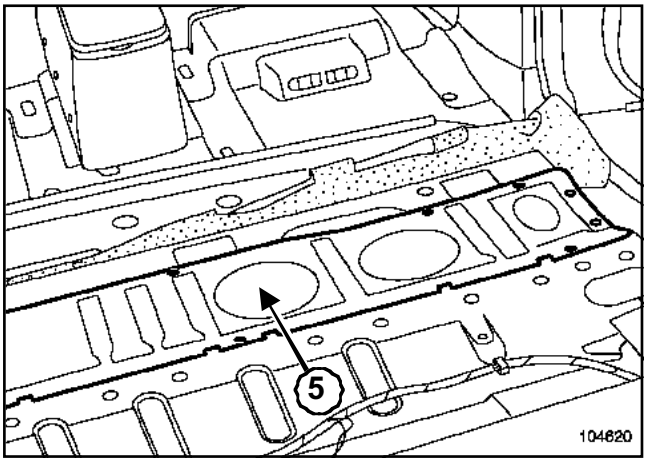

104620

Remove the panel (**5**).

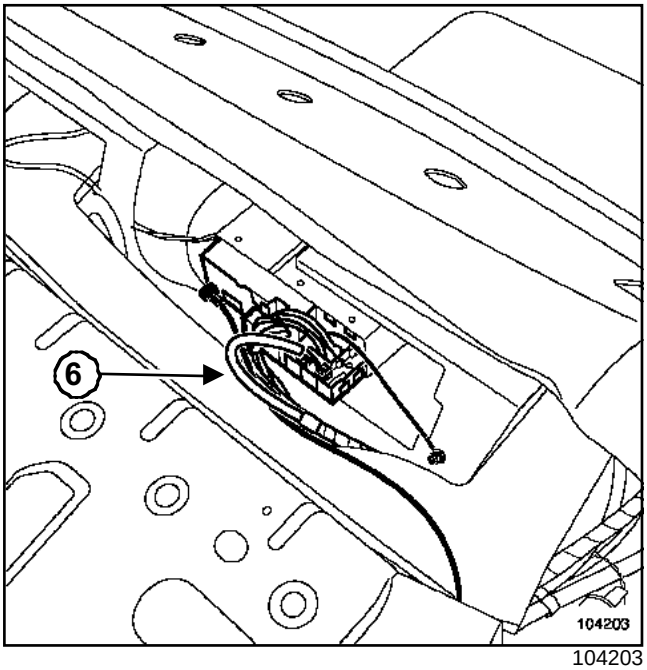

104203

Disconnect the receiver (**6**) (if fitted to the vehicle).

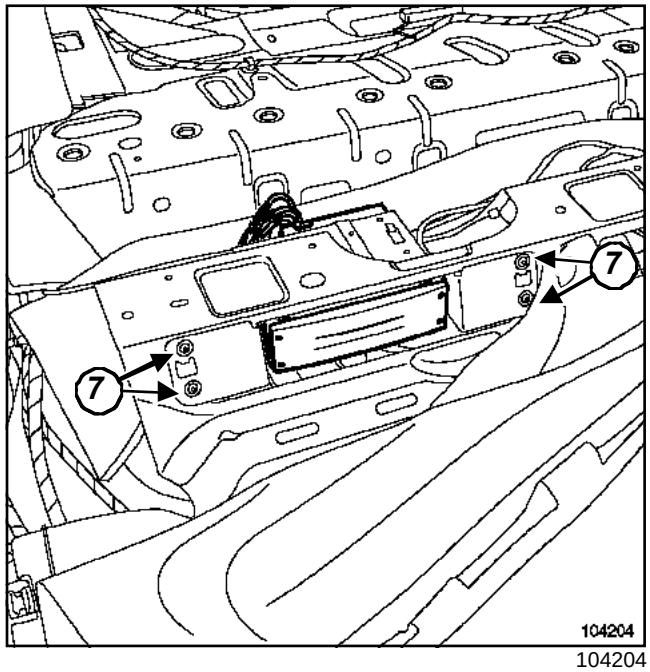

104204

Remove:

- the receiver unit (**7**) mounting bolts,
- the receiver unit assembly.

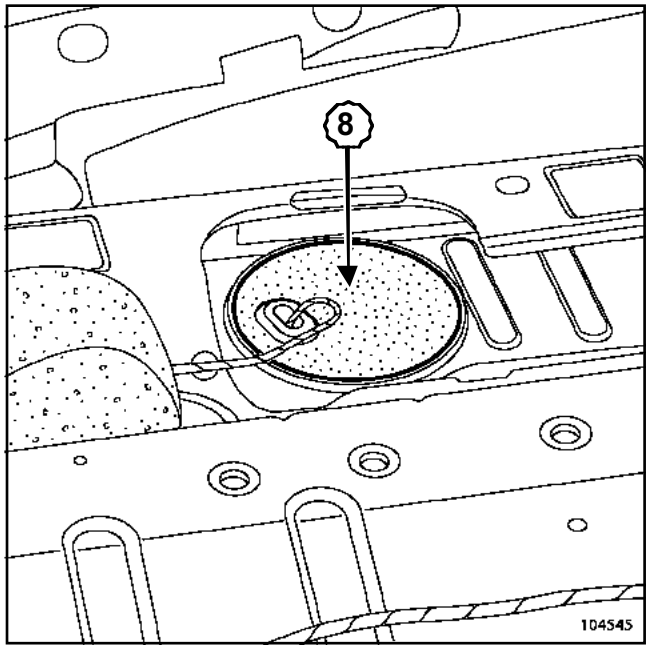

104545

Remove the inspection flap blanking cover (**8**).

X84, and J84, and F9Q or K9K or M9R

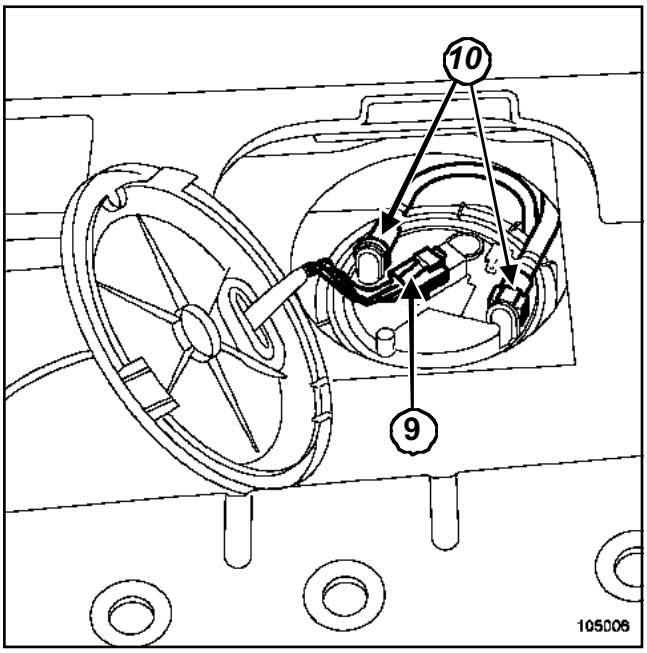

105006

Disconnect:

- the electrical connector (**9**),
- the quick-release unions (**10**).

Prepare for fuel outflow.

Fit the correct blanking plugs into the unions (see **MR 370 Mechanical systems, 13B, Diesel injection: Cleanliness guidelines**).

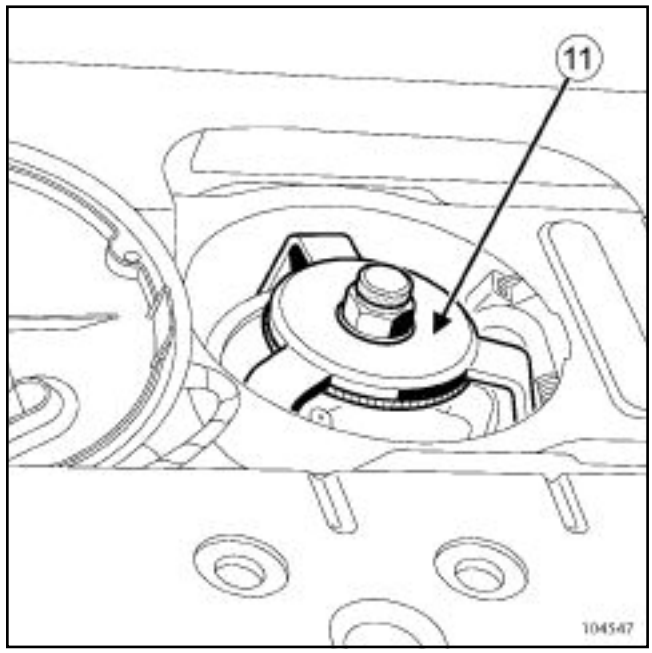

104547

Remove the nut from the sender using tool **(Mot. 1397)**(**11**).

Remove the sender unit, being careful with the float.

WARNING

Refit the sender nut as soon as the sender has been removed to prevent any deformation of the fuel tank.

X84, and J84, and F9Q or K9K or M9R

REFITTING

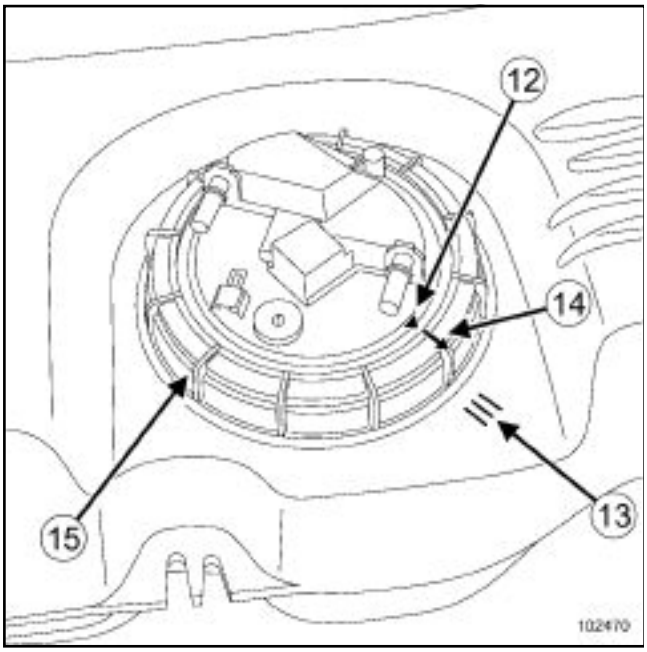

102470

Replace the O-ring seal.

Refit the sender unit by aligning mark (**12**) on the sender with mark (**13**) on the tank.

Position the nut (**15**).

Tighten the nut (**15**) until mark (**14**) on the nut is aligned with mark (**13**) on the tank and mark (**12**)on the sender.

Proceed in the reverse order to removal.

Connect the battery starting with the positive terminal (see **MR 370 Mechanical systems, 80A, Battery: Removal - Refitting**).

Tighten to torque the **battery cover mounting bolts (4 Nm)**.

X77, and K9K

Special tooling required	
Mot. 1397	Universal spanner for removing fuel gauge nut

Tightening torques ▽	
battery cover mounting bolts	**4 Nm**

REMOVAL

Position the vehicle on a two-post lift (see **MR 385 Mechanical systems, 02A, Two-post lift: Safety**).

Drain the fuel tank (see **MR 385 Mechanical systems, 19C, Fuel tank: Draining**).

Remove the battery covers.

Disconnect the battery, starting with the negative terminal.

Disconnect:

- the connectors,

- the fuel supply pipe.

Prepare for fuel outflow.

Fit the correct blanking plugs into the union (see **MR 385 Mechanical systems, 13B, Diesel injection: Repair precautions**).

Remove the fuel tank (see **MR 385 Mechanical systems, 19C, Fuel tank: Removal - Refitting**).

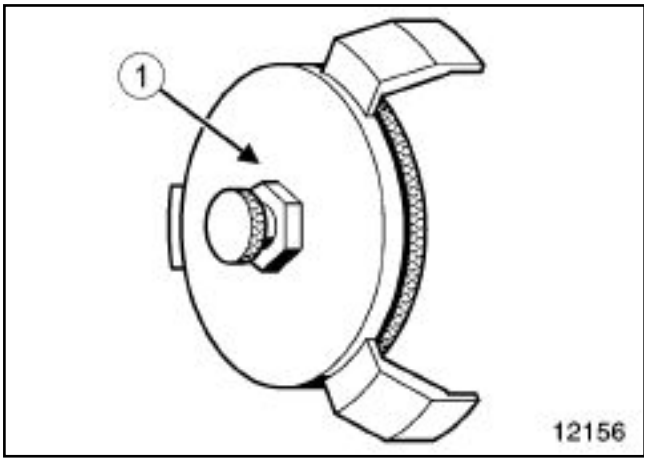

12156

Remove the nut from the sender using tool **(Mot. 1397)**(**1**).

Remove the sender unit, being careful with the float.

WARNING
Refit the sender nut as soon as the sender has been removed to prevent any deformation of the fuel tank.

REFITTING

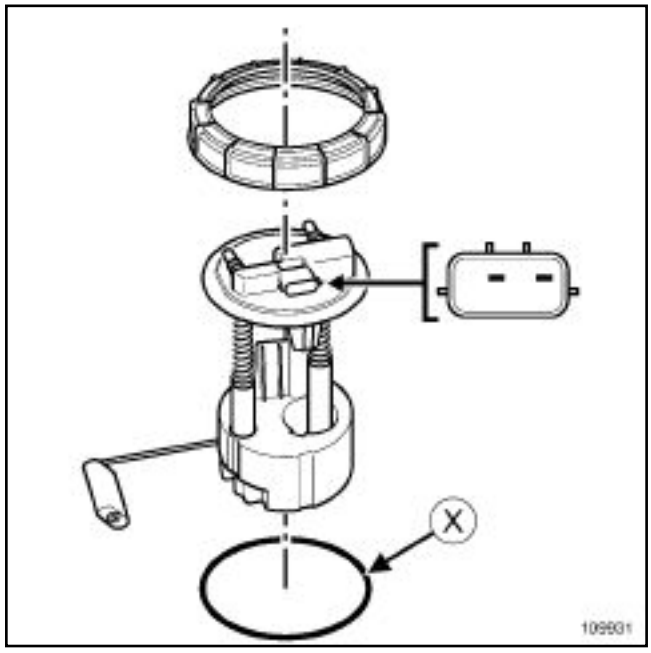

109931

Replace the O-ring seal (**X**).

X77, and K9K

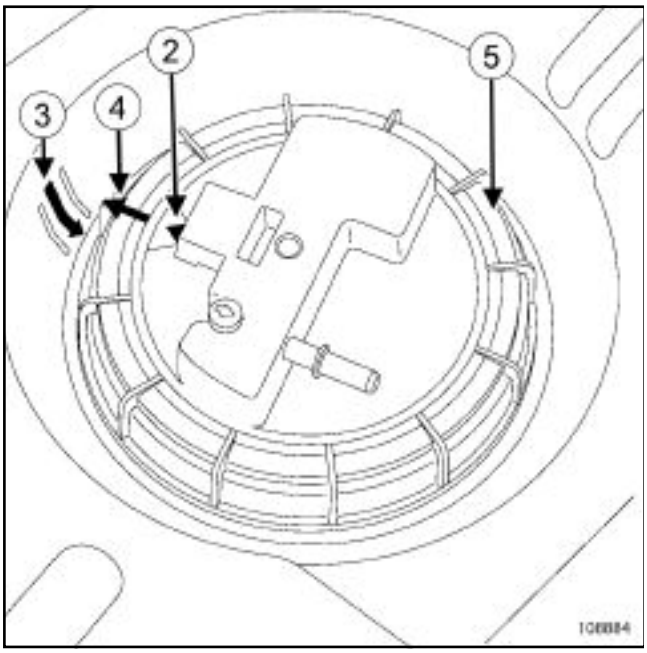

108884

Refit the sender unit by aligning mark (**2**) on the sender with mark (**3**) on the tank.

Position nut (**5**).

Tighten the nut (**5**) until mark (**4**) on the nut is aligned with mark (**3**) on the tank and mark (**2**) on the sender.

Proceed in the reverse order to removal.

Connect the battery starting with the positive terminal (see **MR 385 Mechanical systems, 80A, Battery: Removal - Refitting**).

Tighten to torque the **battery cover mounting bolts (4 Nm)**.

X84, and B84 or C84 or G84 or S84, and F9Q or K9K or M9R

Special tooling required	
Mot. 1397	Universal spanner for removing fuel gauge nut

Tightening torques ▽	
battery cover mounting bolts	**4 Nm**

IMPORTANT

During this operation:

- refrain from smoking or bringing red hot objects close to the working area,
- beware of fuel splashes when disconnecting the union,
- protect sensitive areas from fuel outflow.

REMOVAL

Disconnect the battery, starting with the negative terminal.

Lift up the rear bench seat base (see **MR 365 Bodywork, 76A, Rear seat runners and frames, Complete seat base**).

Remove the carpet retaining clip.

Move the carpet to one side.

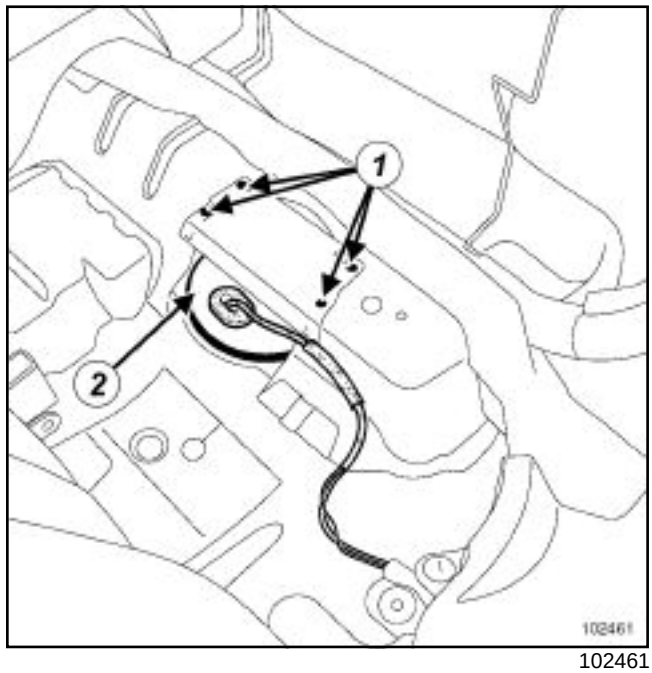

102461

Remove:

- the closure panel mounting bolts (**1**),
- the closure panel,
- the blanking cover (**2**) on the inspection flap.

X84, and B84 or C84 or G84 or S84, and F9Q or K9K or M9R

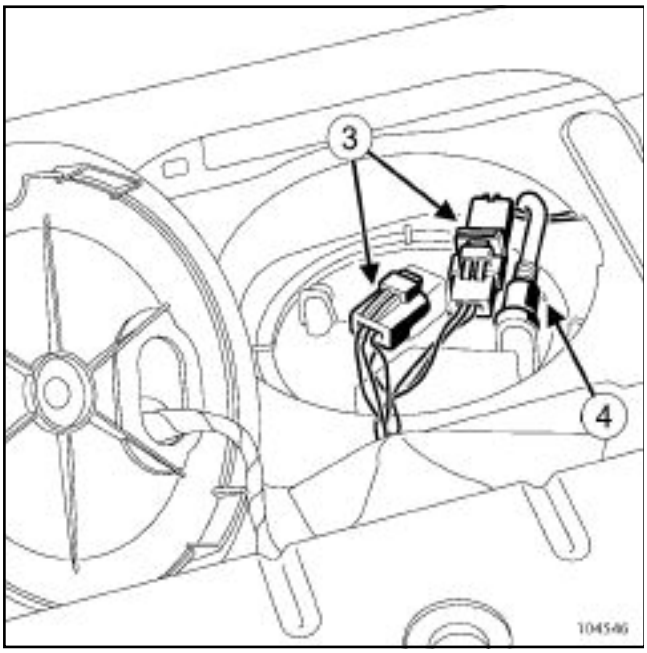

104546

Disconnect:

- electrical connectors (**3**),
- quick-release union(s) (**4**).

Prepare for fuel outflow.

Fit the correct blanking plugs into the unions (see **MR 364 Mégane, 13B, Injection: Cleanliness guidelines**).

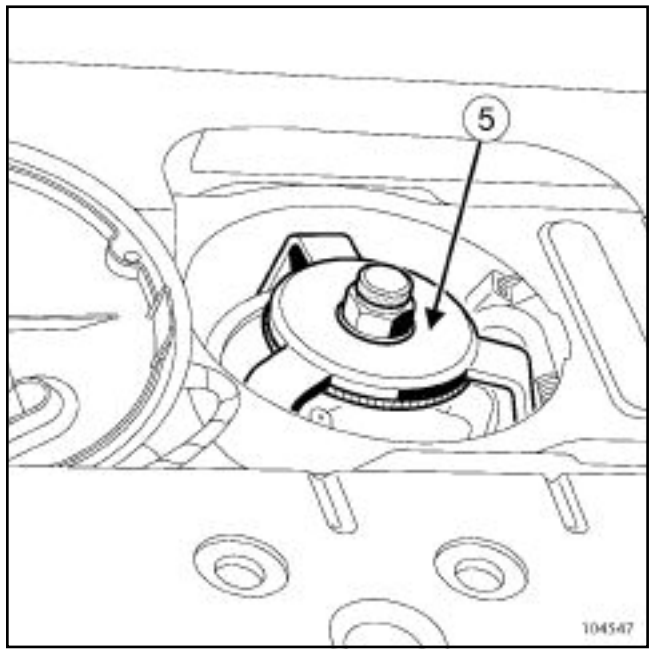

104547

Remove the nut from the sender using tool **(Mot. 1397)**(**5**).

Remove the sender unit, being careful with the float.

WARNING

Refit the sender nut as soon as the sender has been removed to prevent any deformation of the fuel tank.

X84, and B84 or C84 or G84 or S84, and F9Q or K9K or M9R

REFITTING

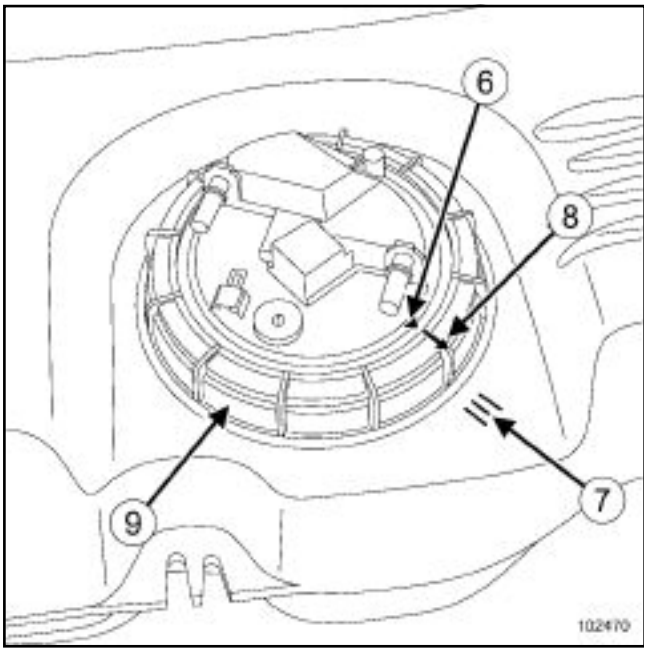

102470

Replace the O-ring seal.

Refit the sender unit by aligning mark (**6**) on the sender with mark (**7**) on the tank.

Position nut (**9**).

Tighten the nut (**9**) until mark (**8**) on the nut is aligned with mark (**7**) on the tank and mark (**6**) on the sender.

Proceed in the reverse order to removal.

Connect the battery starting with the positive terminal (see **MR 364 Mégane, 80A, Battery: Removal - Refitting**).

Tighten to torque the **battery cover mounting bolts (4 Nm)**.

X74, and F9Q or G9T or M9R

Special tooling required	
Mot. 1397	Universal spanner for removing fuel gauge nut

Tightening torques ▽	
battery cover mounting bolts	**4 Nm**

IMPORTANT

During this operation:

- refrain from smoking or bringing red hot objects near the working area,
- beware of fuel splashes when disconnecting the union,
- protect sensitive areas from fuel outflow.

REMOVAL

Disconnect the battery, starting with the negative terminal.

Lift up:

- the rear bench seat base,
- the carpet under the rear bench seat.

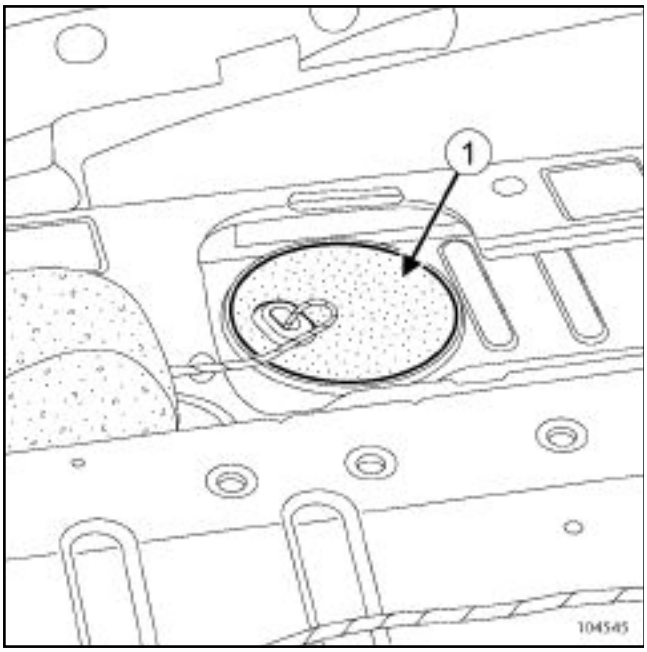

104545

Remove the inspection flap cover (**1**).

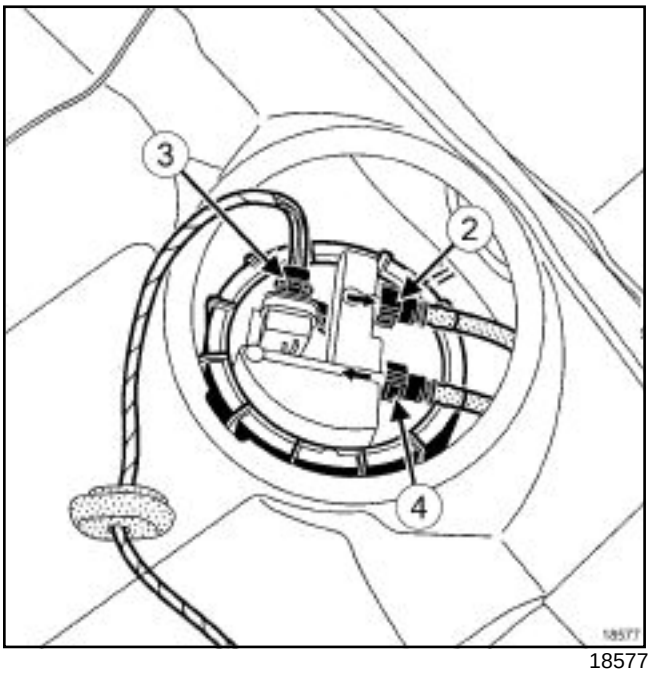

18577

Disconnect:

- the fuel sender connector (**3**),
- the quick-release union (**2**) for the fuel supply,
- the quick-release union (**4**) for the fuel return.

Prepare for fuel outflow.

Fit the correct blanking plugs into the union (see **MR 395 Mechanical systems, 13B, Diesel injection: Repair precautions**).

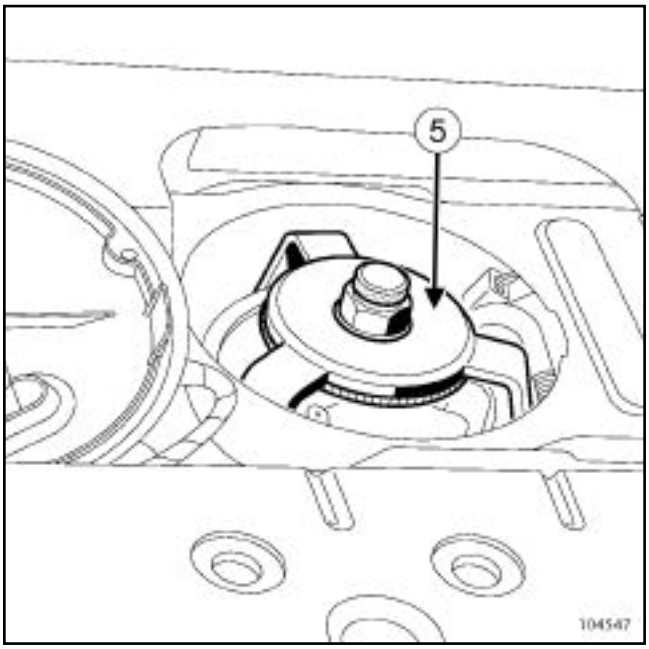

104547

Remove the mounting nut from the sender unit using tool **(Mot. 1397)**(**5**)

X74, and F9Q or G9T or M9R

Remove the sender unit, being careful with the float.

WARNING
Refit the sender nut as soon as the sender has been removed to prevent any deformation of the fuel tank.

REFITTING

Replace the O-ring seal.

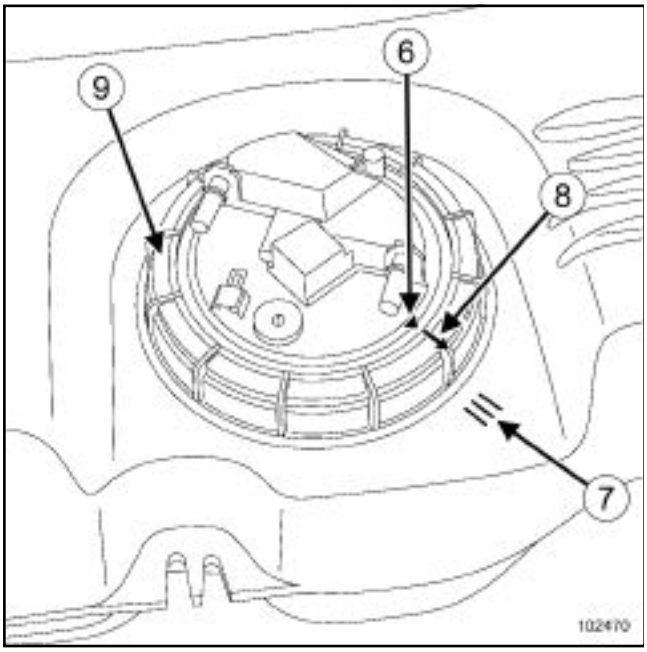

102470

Refit the sender unit by aligning mark (**6**) on the sender with mark (**7**) on the tank.

Position nut (**9**).

Tighten the nut (**9**) until mark (**8**) on the nut is aligned with mark (**7**) on the tank and mark (**6**) on the sender.

Proceed in the reverse order to removal.

Connect the battery starting with the positive terminal (see **MR 395 Mechanical systems, 80A, Battery: Removal - Refitting**).

Tighten to torque the **battery cover mounting bolts (4 Nm)**.

X40, and F8M or F8Q – X76, and F8Q or F9Q or K9K, and DOCUMENT PHASE 1 – X57, and F8Q – X48, and F8Q or J8S – X64, and F8Q or F9Q – X56, and F9Q or G8T – X54, and G8T or J8S or S8U – XTR, and F8Q or J8S or S8U

Special tooling required		
Mot. 1397	X76	Universal spanner for removing fuel gauge nut

Tightening torques ▽	
battery cover mounting bolts	**4 Nm**

IMPORTANT

During this operation:

- refrain from smoking or bringing red hot objects near the working area,
- beware of fuel splashes when disconnecting the union,
- protect sensitive areas from fuel outflow.

REMOVAL

Disconnect the battery, starting with the negative terminal.

Lift up the rear bench seat base.

Move the carpet to one side.

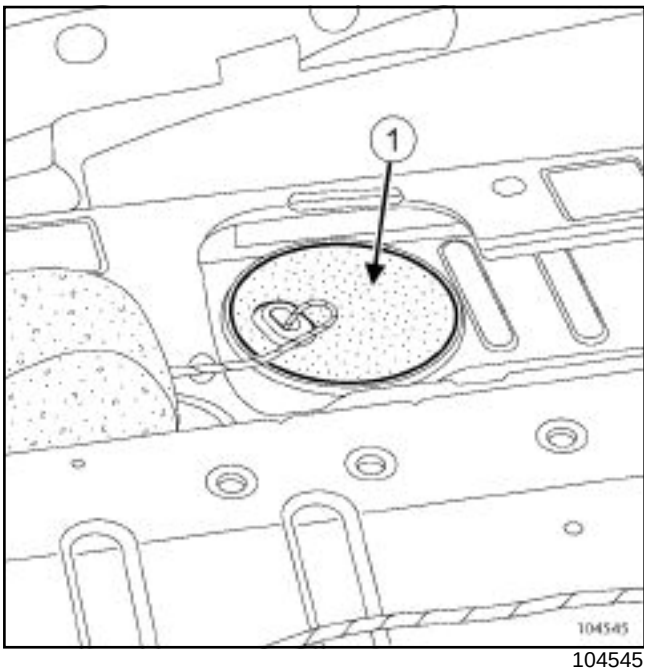

104545

Remove the inspection flap cover (**1**).

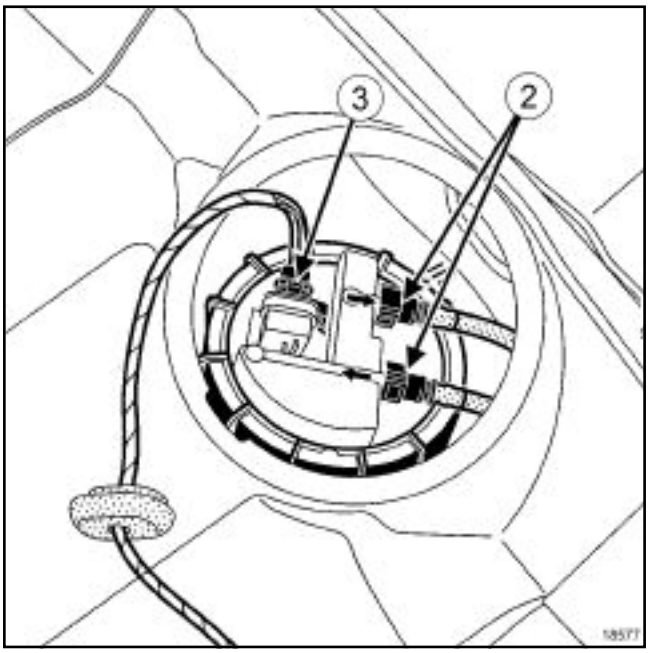

18577

Disconnect:

- the electrical connector (**3**),
- quick-release union(s) (**2**).

Prepare for fuel outflow.

Fit the correct blanking plugs into the unions (**Part number: 77 01 206 804**).

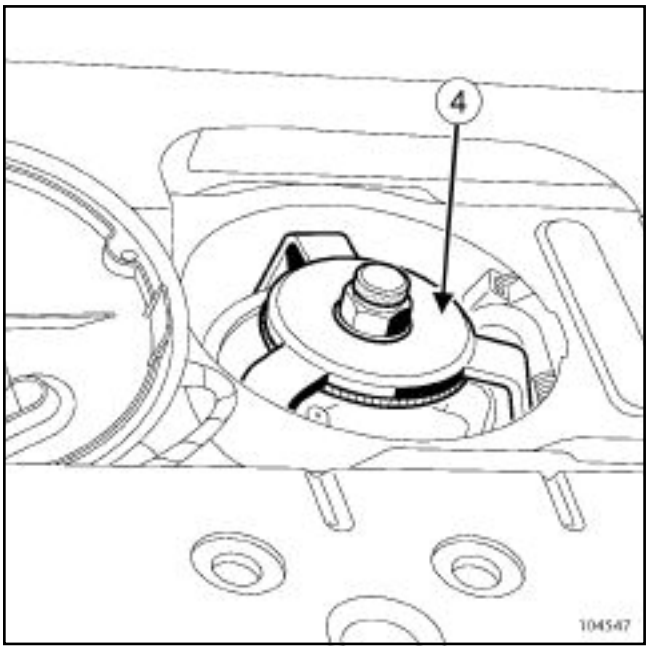

104547

Remove the mounting nut from the sender unit using tool **(Mot. 1397)**(**4**)

X40, and F8M or F8Q – X76, and F8Q or F9Q or K9K, and DOCUMENT PHASE 1 – X57, and F8Q – X48, and F8Q or J8S – X64, and F8Q or F9Q – X56, and F9Q or G8T – X54, and G8T or J8S or S8U – XTR, and F8Q or J8S or S8U

Remove the sender unit, being careful with the float.

WARNING

Refit the sender nut as soon as the sender has been removed to prevent any deformation of the fuel tank.

REFITTING

Replace the O-ring seal.

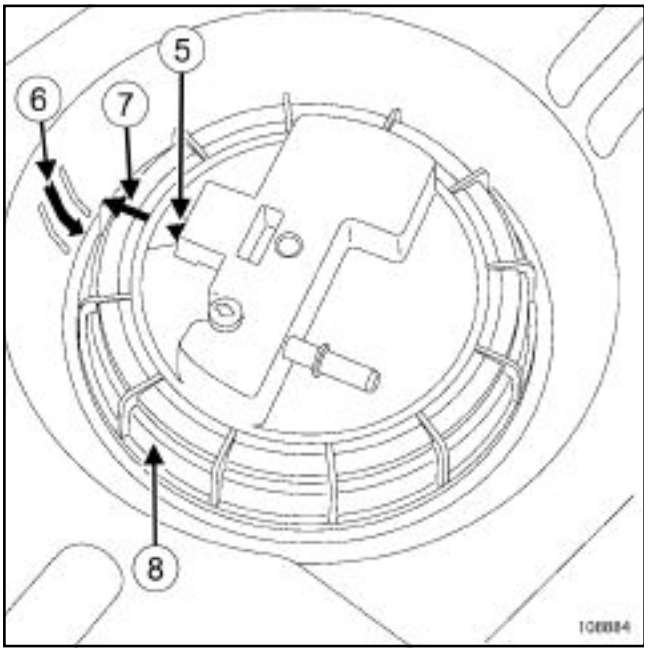

108884

Refit the sender by aligning mark (**5**) on the sender with mark (**6**) on the tank.

Position the nut (**8**).

Tighten the nut (**8**) until mark (**7**) on the nut is aligned with mark (**6**) on the tank and mark (**5**)on the sender.

Proceed in the reverse order to removal.

Connect the battery, starting with the positive terminal (see **MR for the vehicle concerned, 80A, Battery, Special notes**

Tighten to torque the **battery cover mounting bolts (4 Nm)**.

X76, and F8Q or F9Q or K9K, and DOCUMENT PHASE 2

Special tooling required	
Mot. 1397	Universal spanner for removing fuel gauge nut

IMPORTANT

During this operation, it is essential to:

- refrain from smoking or bringing red hot objects close to the working area,
- guard against petrol splashes caused by the residual pressure in the pipes,
- protect sensitive areas from fuel outflow.

REMOVAL

Disconnect the battery, starting with the negative terminal.

Fold up the rear bench seat into a vertical position.

Move the carpet to one side.

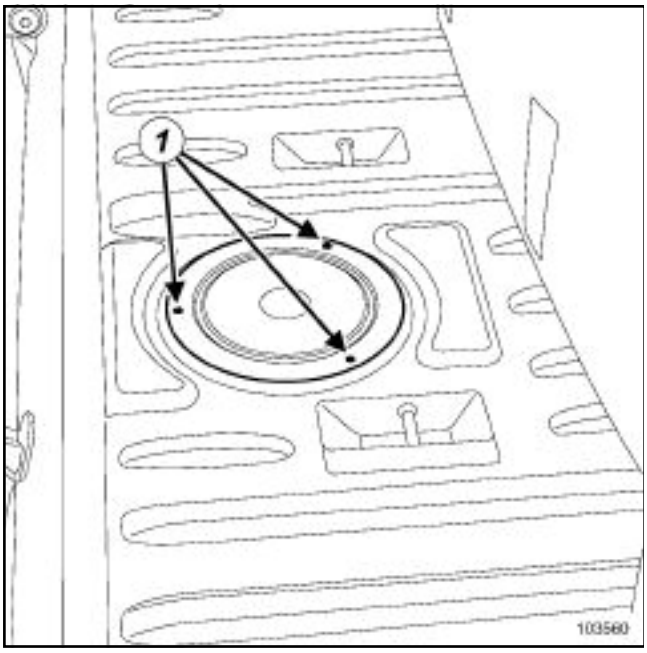

103560

Remove the inspection panel flap mounting bolts (**1**).

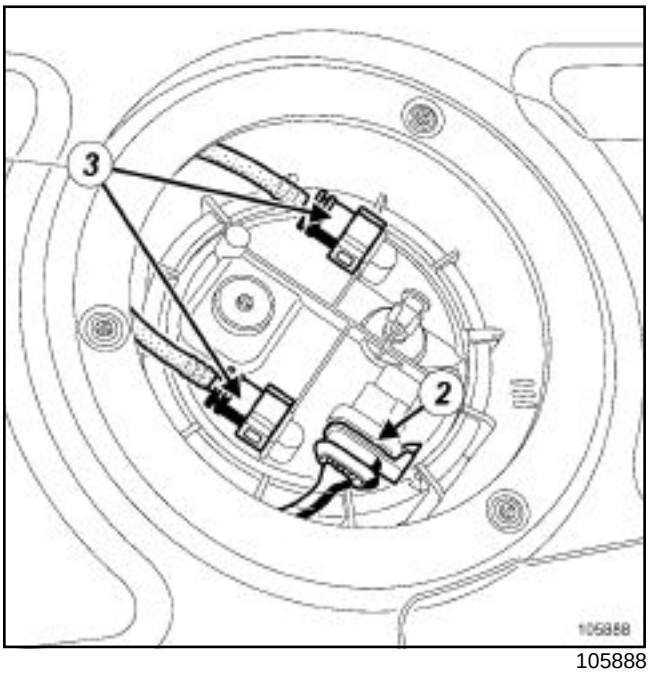

105888

Disconnect the electrical connector (**2**) and the snap-on union(s) (**3**) (depending on the version).

Prepare for fuel outflow.

Fit the correct blanking plugs into the unions (see **MR 380 Mechanical systems, 13B, Diesel injection: Precautions during repair**).

X76, and F8Q or F9Q or K9K, and DOCUMENT PHASE 2

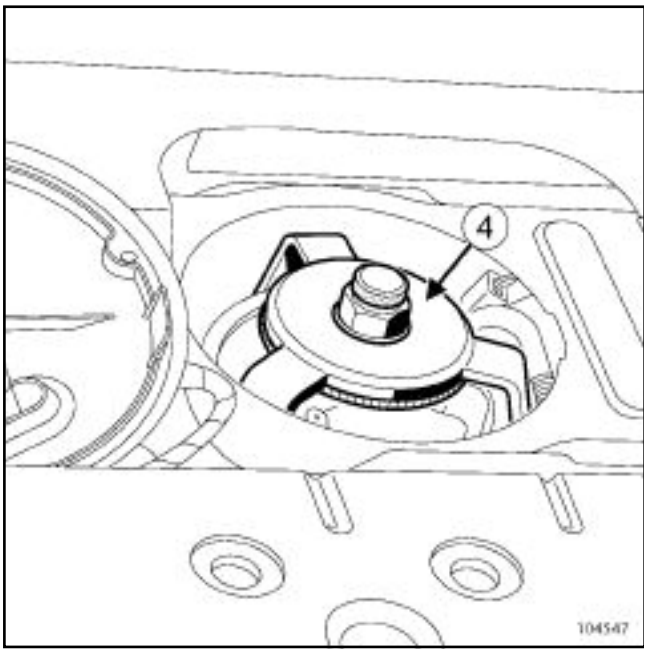

104547

Remove the mounting nut from the sender unit using tool **(Mot. 1397)**(**4**)

Remove the sender unit, being careful with the float.

WARNING
Refit the sender nut as soon as the sender has been removed to prevent any deformation of the fuel tank.

REFITTING

Replace the O-ring seal.

Refit the sender following the procedure relevant to the vehicle (see below).

All types except four-wheel drive version

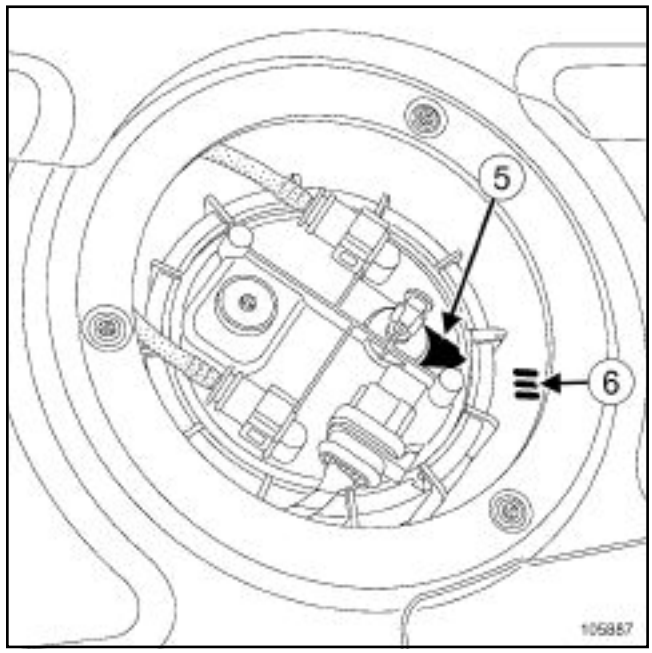

105887

Refit the sender unit by aligning mark (**5**) on the sender with mark (**6**) on the tank.

Four-wheel drive version

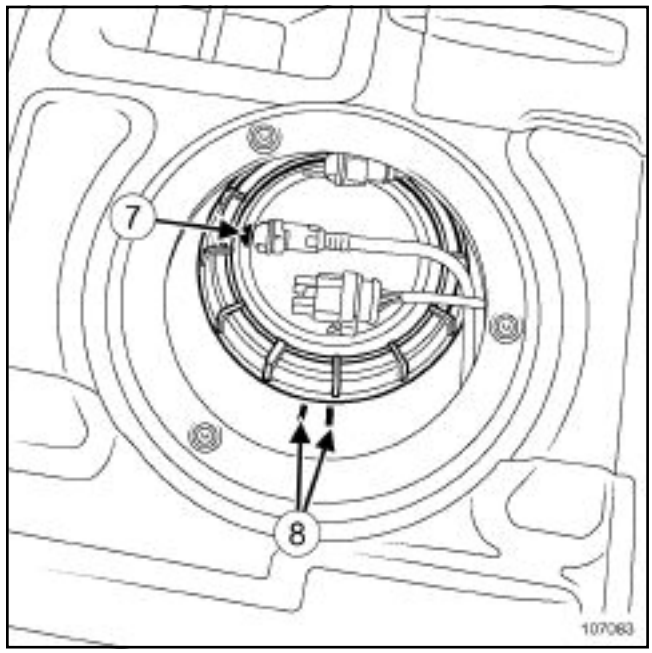

107083

Refit the sender, positioning the axis of mark (**7**) on the sender perpendicular to the two marks (**8**) on the tank.

All Types

Proceed in the reverse order to removal.

Connect the battery starting with the positive terminal (see **MR 380 Mechanical systems, 80A, Battery: Removal - Refitting**).

X90, and L90, and K9K, and 790

Special tooling required	
Mot. 1397	Universal spanner for removing fuel gauge nut

REMOVAL

I - REMOVAL PREPARATION OPERATION

Disconnect the battery (see **80A, Battery, Battery: Removal - Refitting**).

IMPORTANT

During this operation, it is essential to:

- refrain from smoking or bringing red hot objects close to the work area,
- beware of fuel splashes when disconnecting the union,
- protect sensitive areas from fuel outflow.

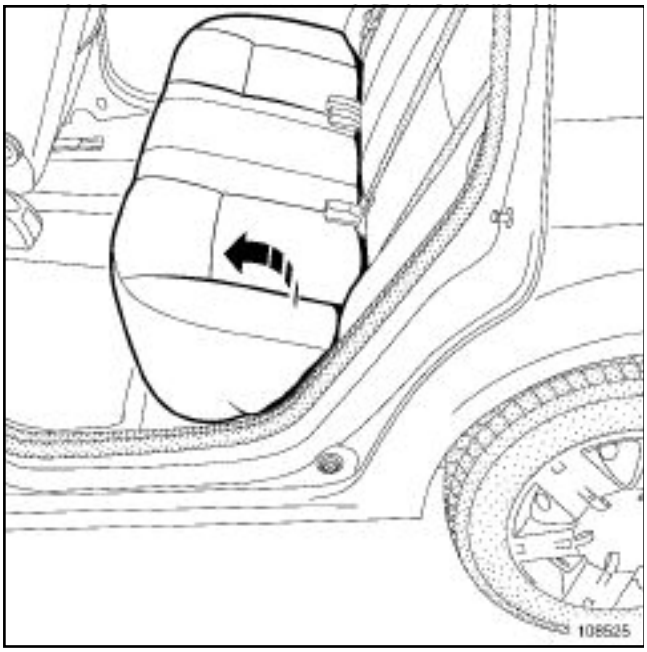

108525

Open the two rear doors.

Lift up the seat base from the rear bench seat (see **Workshop repair Manual 389 Bodywork, 76A, Rear seat frames and runners, Complete seat base**).

II - OPERATION FOR REMOVAL OF PART CONCERNED

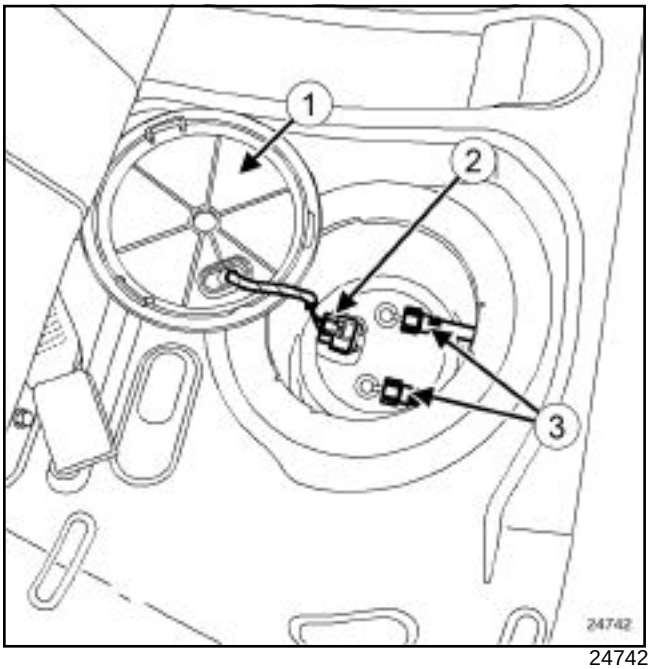

24742

Remove the sender access flap (**1**).

Disconnect:

- the connector on the sender unit (**2**).
- the sender unit pipes (**3**).

Make preparations for the fuel outflow.

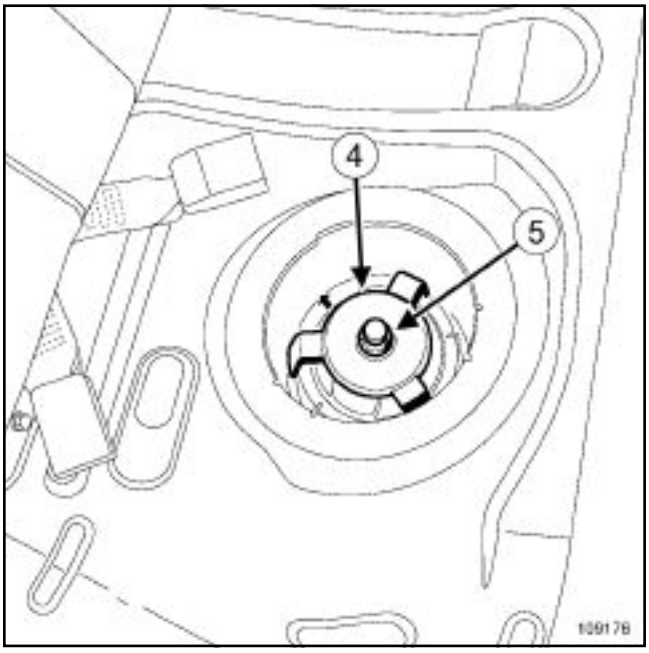

109176

Remove the mounting nut (**4**) from the sender unit using tool **(Mot. 1397)**(**5**).

Let the fuel in the sender drain out.

X90, and L90, and K9K, and 790

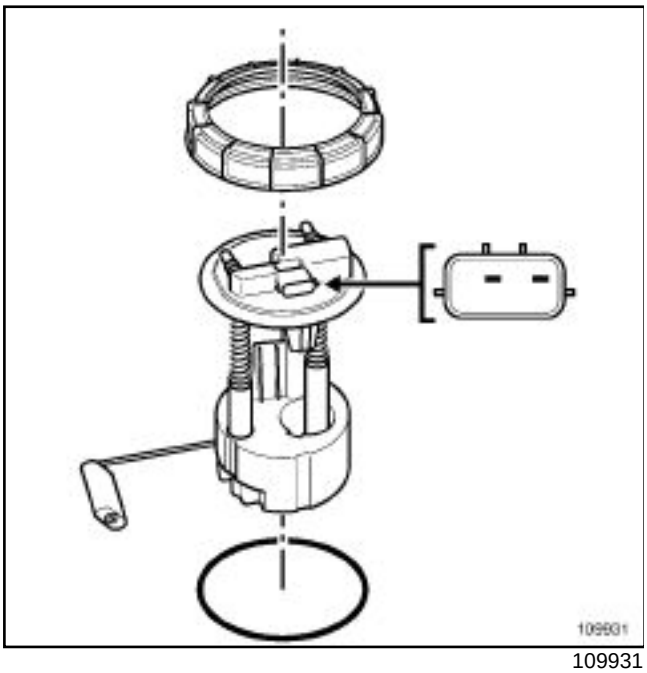

109931

Remove the sender unit, being careful with the float.

WARNING
Refit the sender nut as soon as the sender has been removed to prevent any deformation of the fuel tank.

REFITTING

I - REFITTING PREPARATION OPERATION

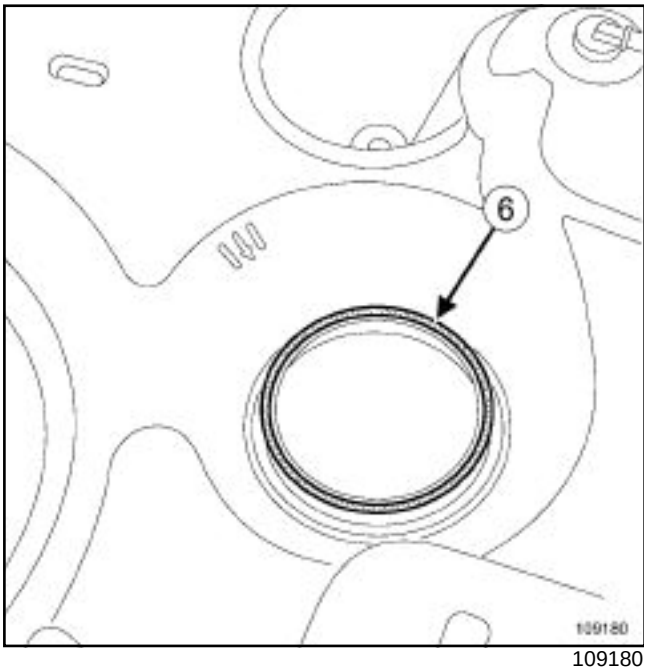

109180

It is essential to replace O-ring seal (**6**).

II - REFITTING OPERATION FOR PART CONCERNED

WARNING
Ensure that the seal is correctly positioned when refitting the sender unit.

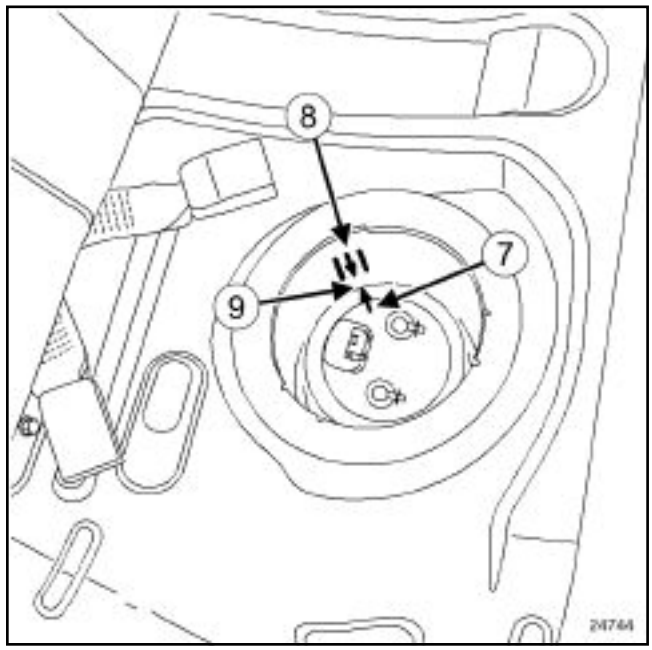

24744

Refit:

- the sender unit, aligning it with the mark (**7**) on the sender and the mark (**8**) on the tank,

- the sender mounting nut.

Tighten the nut until mark (**9**) on the nut is aligned with mark (**7**) on the sender and mark (**8**) on the tank.

Connect:

- the pipes to the sender unit,

- the sender unit connector.

Refit the sender access flap.

III - FINAL OPERATION

Refit the rear bench seat base.

Connect the battery (see **80A, Battery, Battery: Removal - Refitting**).

X84, and B84 or C84 or G84 or S84, and K4M – X84, and B84 or C84 or G84 or S84, and F4R – X84, and B84 or C84 or G84 or S84, and K4J

Special tooling required	
Mot. 1397	Universal spanner for removing fuel gauge nut

Tightening torques ▽	
battery cover mounting bolts	**4 Nm**

IMPORTANT

During this operation:

- refrain from smoking or bringing red hot objects close to the working area,
- beware of fuel splashes when disconnecting the union,
- protect sensitive areas from fuel outflow.

REMOVAL

Disconnect the battery, starting with the negative terminal.

Lift up the rear bench seat base (see **MR 365 Bodywork, 76A, Rear seat runners and frames, Complete seat base**).

Remove the carpet retaining clip.

Move the carpet to one side.

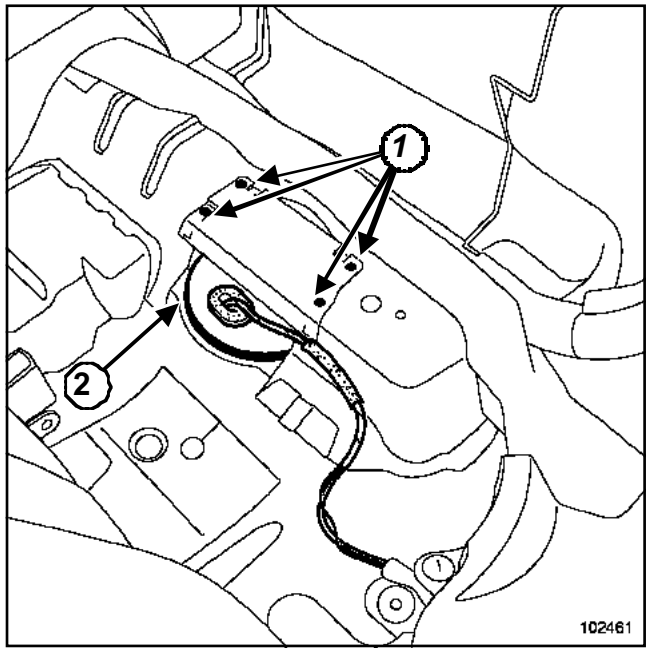

102461

Remove:

- the closure panel mounting bolts (**1**),
- the closure panel,
- the blanking cover (**2**) on the inspection flap.

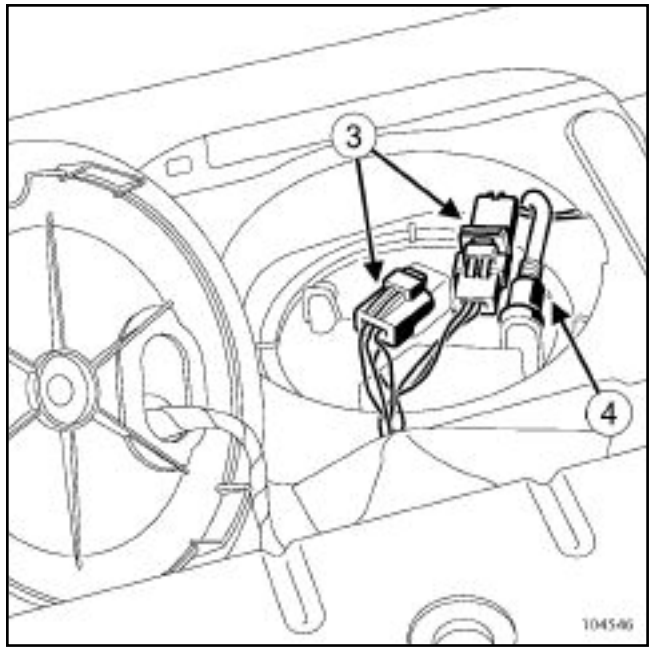

104546

Disconnect:

- electrical connectors (**3**),
- quick-release union(s) (**4**).

Prepare for fuel outflow.

X84, and B84 or C84 or G84 or S84, and K4M – X84, and B84 or C84 or G84 or S84, and F4R – X84, and B84 or C84 or G84 or S84, and K4J

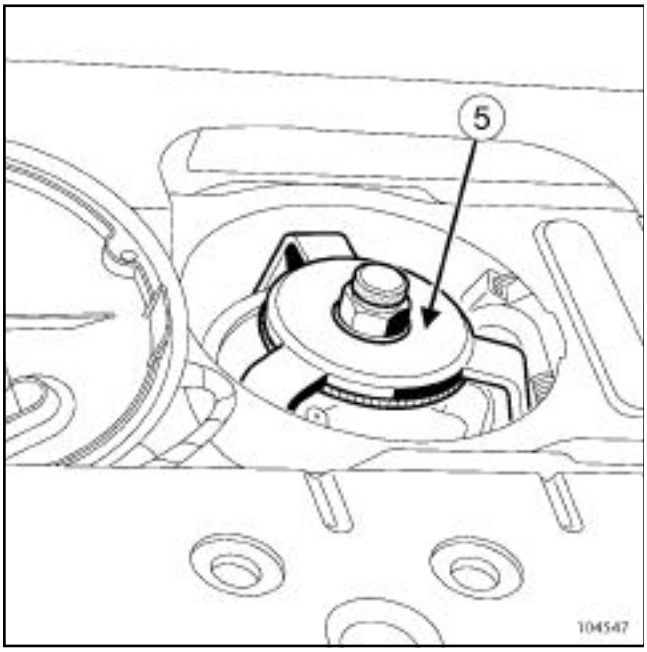

104547

Remove the nut from the pump/sender/filter assembly using tool **(Mot. 1397)**(**5**).

Remove the pump/sender/filter assembly, being careful not to damage the float.

WARNING

Refit the pump/sender/filter assembly nut as soon as the pump/sender/filter assembly has been removed to prevent any deformation of the fuel tank.

REFITTING

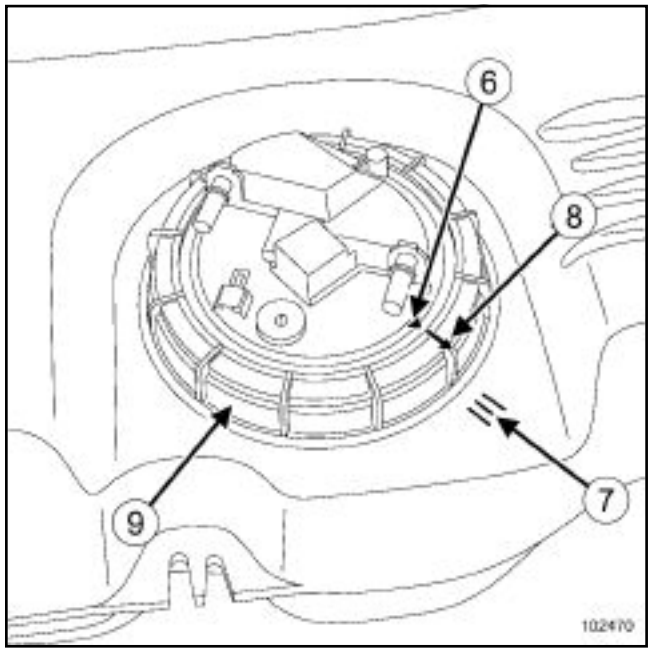

102470

Replace the O-ring seal.

Refit the pump/sender/filter assembly, aligning mark (**6**) on the pump/sender/filter assembly with mark (**7**) on the tank.

Position the nut (**9**).

Tighten the nut (**9**) until the mark (**8**) on the nut is aligned with mark (**7**) on the tank and mark (**6**) on the pump/sender/filter assembly.

Proceed in the reverse order to removal.

Connect the battery starting with the positive terminal (see **MR 364 Mechanical systems, 80A, Battery: Removal - Refitting**).

Tighten to torque the **battery cover mounting bolts (4 Nm)**.

X84, and J84, and F4R or K4J or K4M

Special tooling required	
Mot. 1397	Universal spanner for removing fuel gauge nut

Tightening torques ▽	
battery cover mounting bolts	**4 Nm**

IMPORTANT

During this operation:

- refrain from smoking or bringing red hot objects close to the working area,
- beware of fuel splashes when disconnecting the union,
- protect sensitive areas from fuel outflow.

REMOVAL

Disconnect the battery, starting with the negative terminal.

Remove the rear seats (see **MR 371 Bodywork, 76A, Rear seat runners and frames, Second row complete rear seat**).

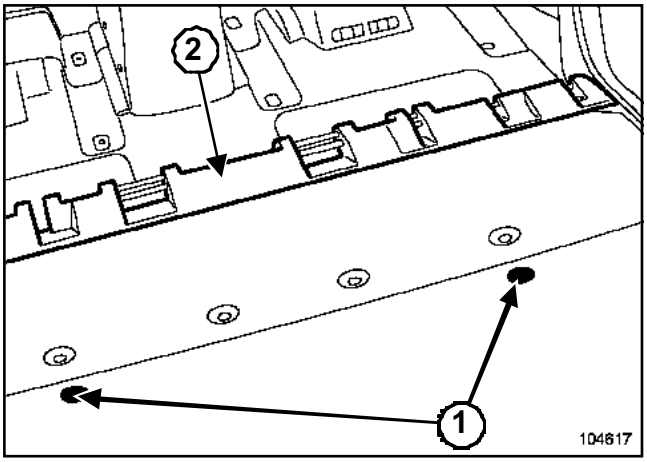

104617

Remove:

- the clips (**1**),
- the trim (**2**).

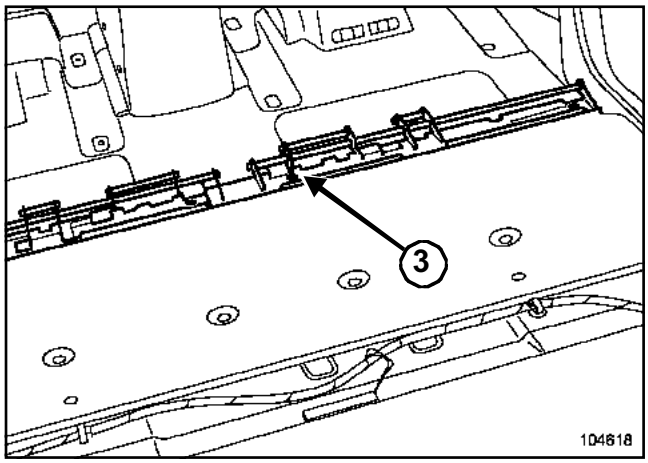

104618

Remove the seat mountings (**3**).

Move the carpet to one side.

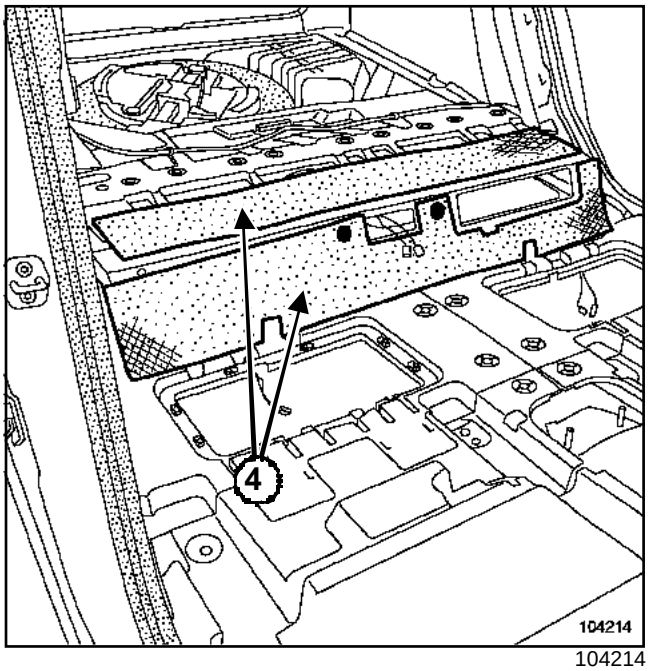

104214

Remove the soundproofing (**4**).

X84, and J84, and F4R or K4J or K4M

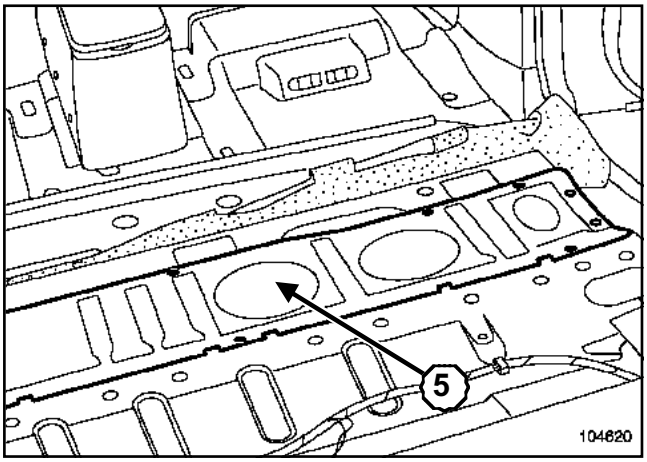

104620

Remove the panel (**5**).

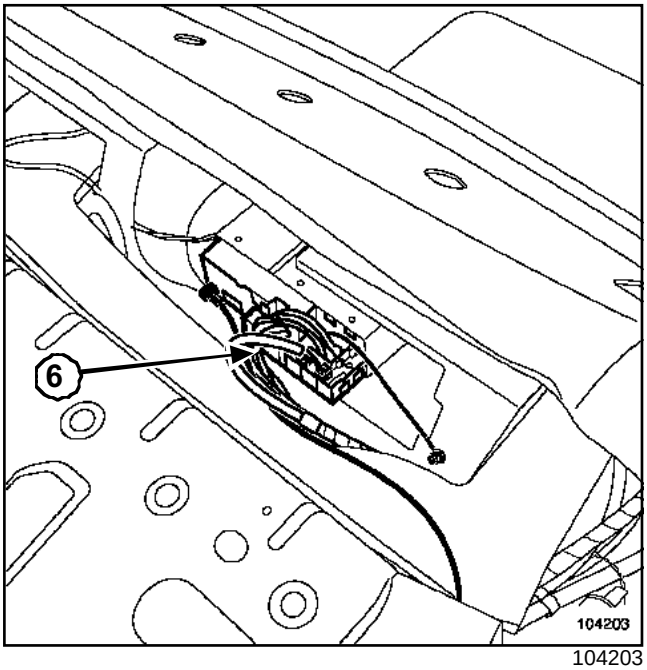

104203

Disconnect the receiver (**6**) (if fitted to the vehicle).

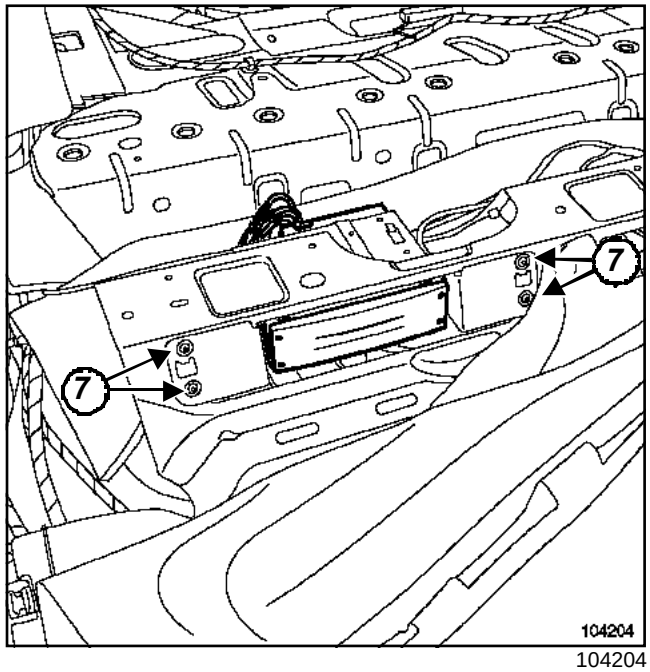

104204

Remove:

- the mounting bolts (**7**) from the receiver unit,
- the receiver unit assembly.

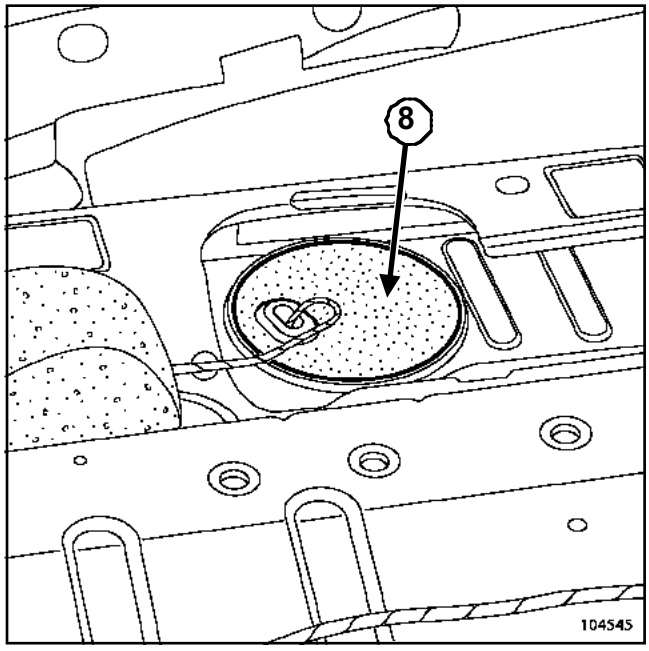

104545

Remove the access flap blanking cover (**8**).

X84, and J84, and F4R or K4J or K4M

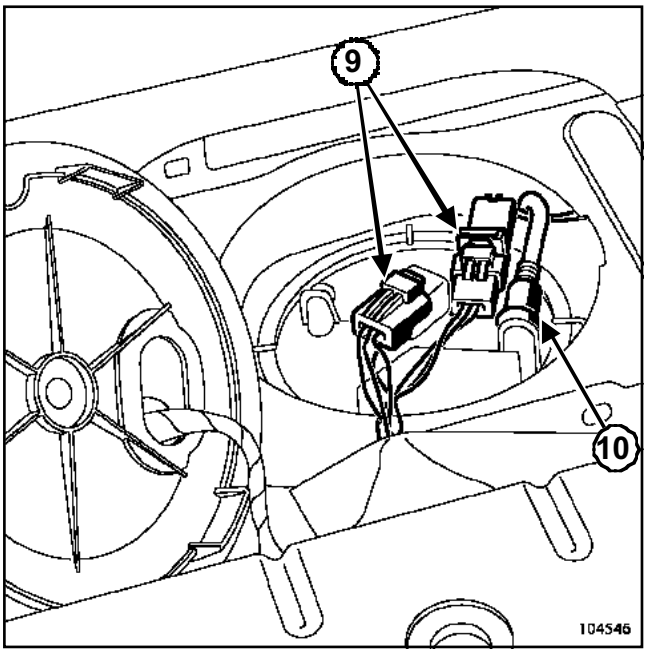

104546

Disconnect:

- the electrical connectors (**9**),
- the quick-release union (**10**).

Prepare for fuel outflow.

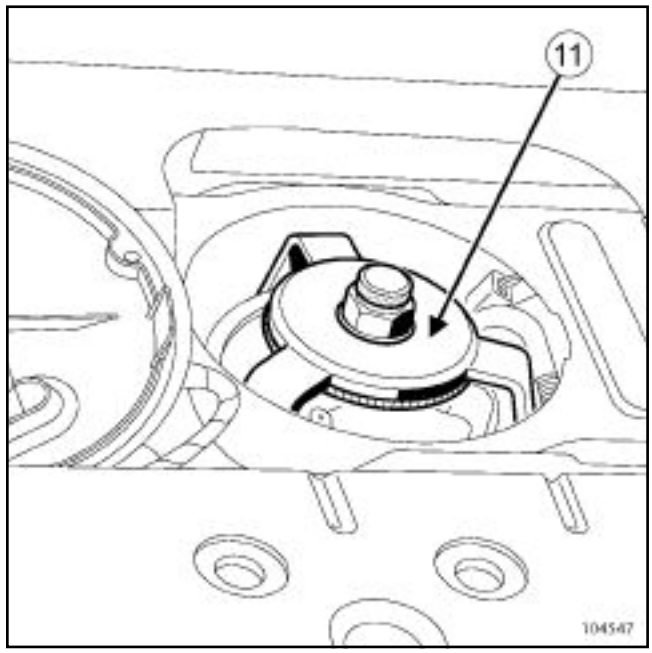

104547

Remove the nut from the « pump/sender/filter » assembly using tool **(Mot. 1397)**(**11**).

Remove the « pump/sender/filter » assembly, being careful of the float.

WARNING

Refit the « pump/sender/filter » assembly nut as soon as the « pump/sender/filter » assembly is removed to prevent any deformation of the tank

X84, and J84, and F4R or K4J or K4M

REFITTING

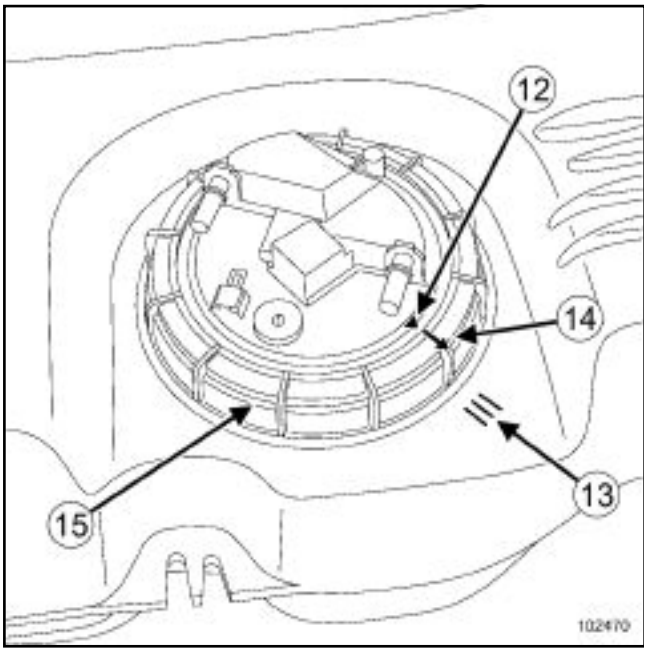

102470

Replace the O-ring seal.

Refit the « pump/sender/filter » assembly, aligning mark (**12**) on the « pump/sender/filter » assembly with mark (**13**) on the tank.

Position the nut (**15**).

Tighten the nut (**15**) until mark (**14**) on the nut is aligned with mark (**13**) on the tank and with mark (**12**) on the « pump/sender/filter » assembly.

Proceed in the reverse order to removal.

Connect the battery starting with the positive terminal (see **MR 370 Mechanical systems, 80A, Battery: Removal - Refitting**).

Tighten to torque the **battery cover mounting bolts (4 Nm)**.

X76, and D4D or D4F or D7D or D7F or E7J or K4M or K7J or K7M, and DOCUMENT PHASE 2

Special tooling required	
Mot. 1397	Universal spanner for removing fuel gauge nut

IMPORTANT

During this operation, it is essential to:

- refrain from smoking or bringing red hot objects close to the working area,
- guard against petrol splashes caused by the residual pressure in the pipes,
- protect sensitive areas from fuel outflow.

REMOVAL

Disconnect the battery, starting with the negative terminal.

Fold up the rear bench seat into a vertical position.

Move the carpet to one side.

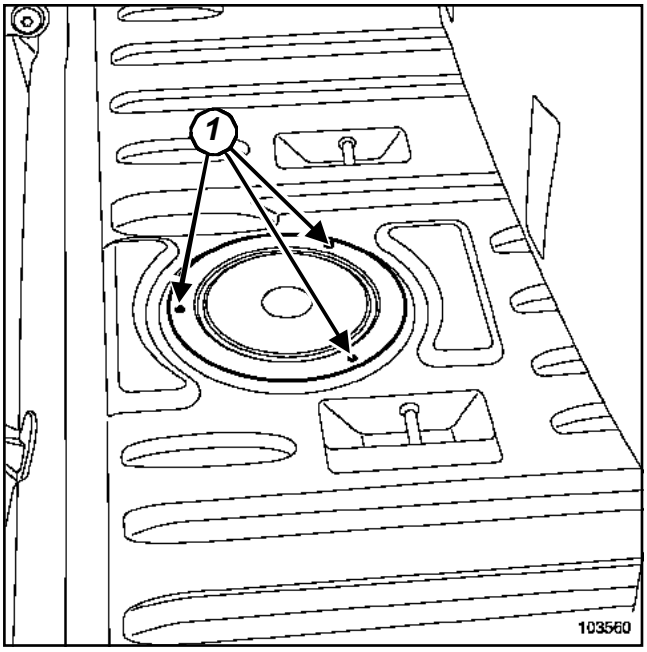

103560

Remove the inspection panel flap mounting bolts (**1**).

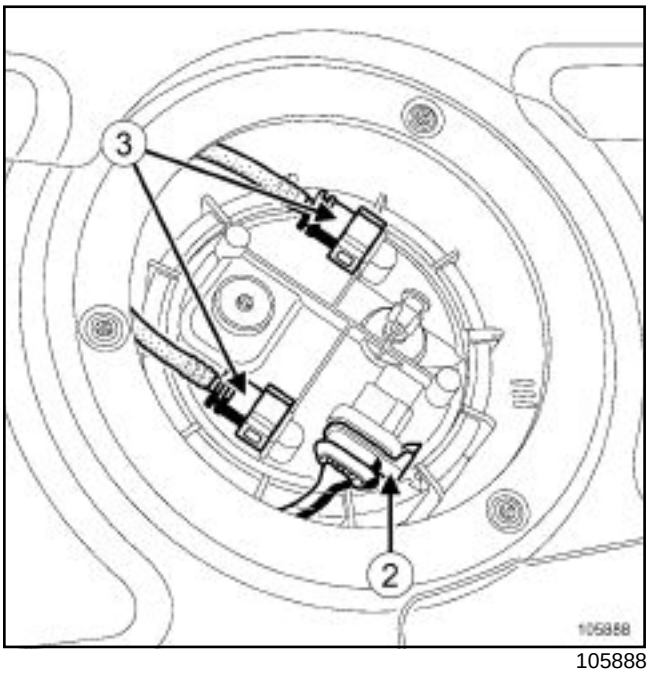

105888

Disconnect the electrical connector (**2**) and the snap-on union(s) (**3**) (depending on the version).

Prepare for fuel outflow.

X76, and D4D or D4F or D7D or D7F or E7J or K4M or K7J or K7M, and DOCUMENT PHASE 2

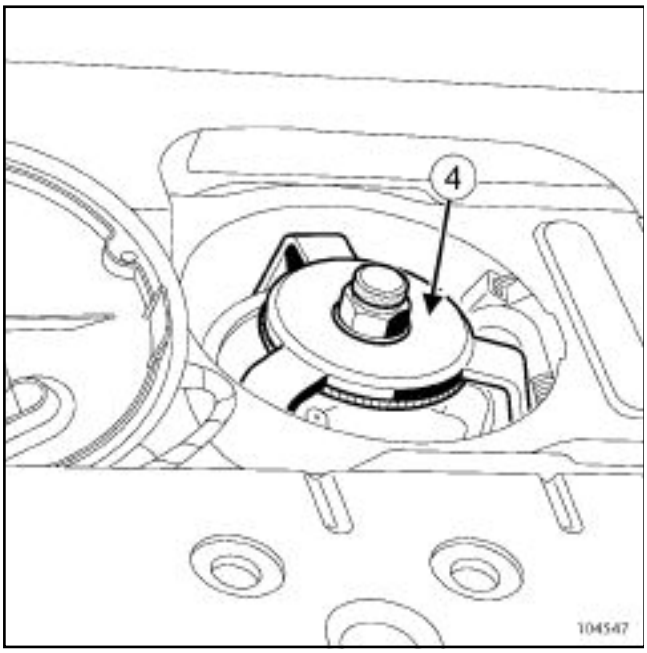

104547

Remove the mounting nut from the « pump/sender/filter » assembly using tool **(Mot. 1397)**(**4**).

Remove the « pump/sender/filter » assembly, being careful of the float.

WARNING

Refit the pump/sender/filter assembly nut as soon as the pump/sender/filter assembly has been removed to prevent any deformation of the fuel tank.

REFITTING

Replace the O-ring seal.

Refit the « pump/sender/filter » assembly following the procedure relevant to the vehicle (see below).

All types except four-wheel drive version

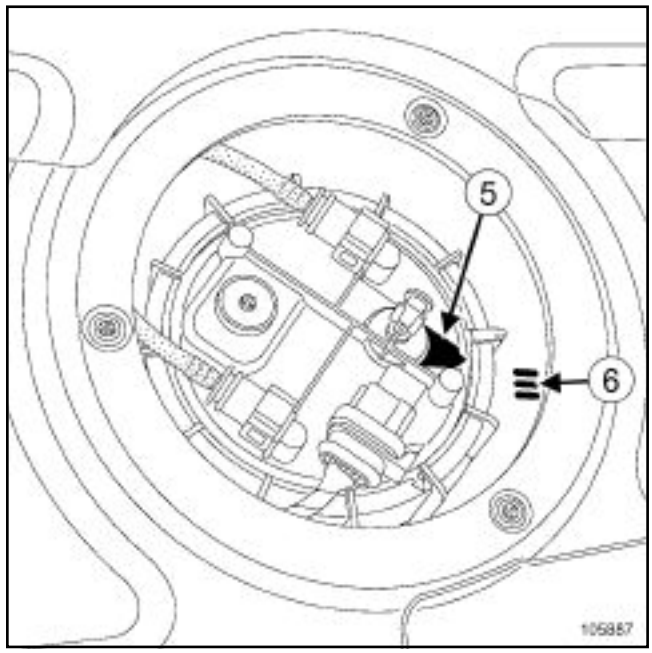

105887

Refit the « pump/sender/filter » assembly, aligning mark (**5**) on the « pump/sender/filter » assembly with mark (**6**) on the tank.

Four-wheel drive version

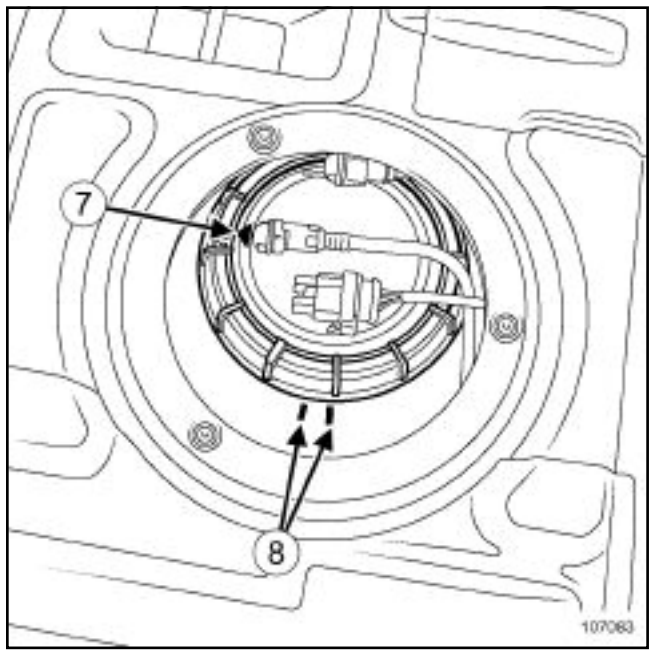

107083

Refit the « pump/sender/filter » assembly, positioning the axis of mark (**7**) on the « pump/sender/filter » assembly perpendicular to the two marks (**8**) on the tank.

All Types

Proceed in the reverse order to removal.

X76, and D4D or D4F or D7D or D7F or E7J or K4M or K7J or K7M, and DOCUMENT PHASE 2

Connect the battery starting with the positive terminal (see **MR 380 Mechanical systems, 80A, Battery: Removal - Refitting**).

X77, and D4F or K4J or K4M

Special tooling required	
Mot. 1397	Universal spanner for removing fuel gauge nut

Tightening torques ▽	
battery cover mounting bolts	**4 Nm**

REMOVAL

Position the vehicle on a two-post lift (see **MR 385 Mechanical systems, 02A, Two-post lift: Safety**).

Drain the fuel tank (see **MR 385 Mechanical systems, 19C, Fuel tank: Draining**).

Remove:

- the resonator,
- the battery covers.

Disconnect the battery, starting with the negative terminal.

Disconnect:

- the connectors,
- the fuel supply pipe,

Prepare for fuel outflow.

Remove the fuel tank (see **MR 385 Mechanical systems, 19C, Fuel tank: Removal - Refitting**).

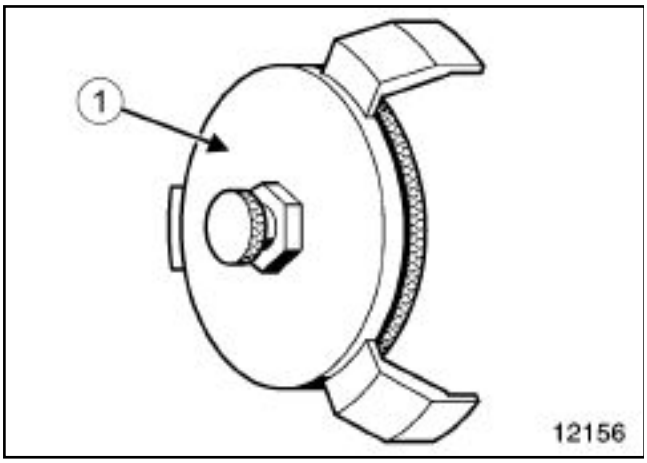

12156

Remove the mounting nut from the « pump/sender/filter » assembly using tool **(Mot. 1397)**(**1**).

Remove the « pump/sender/filter » assembly, being careful of the float.

WARNING

Refit the « pump/sender/filter » assembly nut as soon as the « pump/sender/filter » assembly is removed to prevent any deformation of the tank,

REFITTING

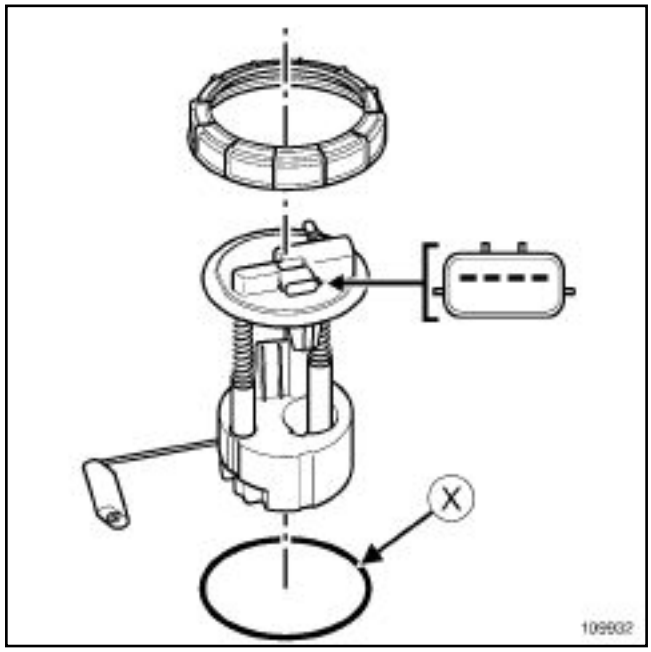

109932

Replace the O-ring seal (**X**).

X77, and D4F or K4J or K4M

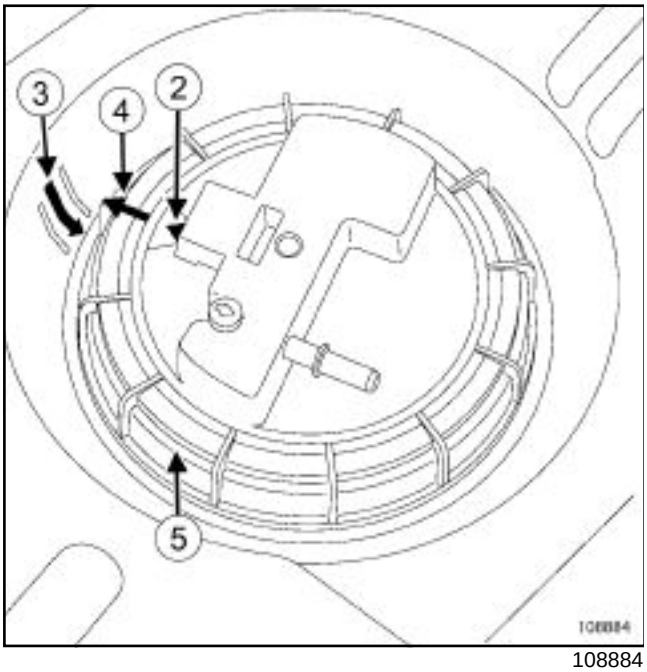

108884

Refit the « pump/sender/filter » assembly, aligning mark (**2**) on the « pump/sender/filter » assembly with mark (**3**) on the tank.

Position the nut (**5**).

Tighten the nut (**5**) until mark (**4**) on the nut is aligned with mark (**3**) on the tank and with mark (**2**) on the « pump/sender/filter » assembly.

Proceed in the reverse order to removal.

Connect the battery starting with the positive terminal (see **MR 385 Mechanical systems, 80A, Battery: Removal - Refitting**).

Tighten to torque the **battery cover mounting bolts (4 Nm)**.

X90, and K7J or K7M, and 710

Special tooling required	
Mot. 1397	Universal spanner for removing fuel gauge nut

Tightening torques ▽	
battery cover mounting bolts	**4 Nm**

IMPORTANT

During this operation:

- refrain from smoking or bringing red hot objects close to the work area,
- beware of fuel splashes when disconnecting the union,
- protect sensitive areas from fuel outflow.

REMOVAL

Disconnect the battery, starting with the negative terminal.

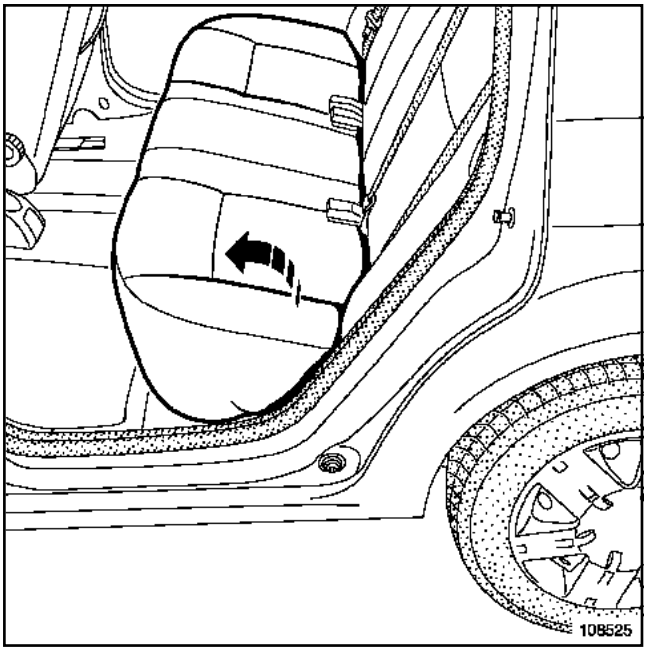

108525

Tilt the rear bench seat base forwards.

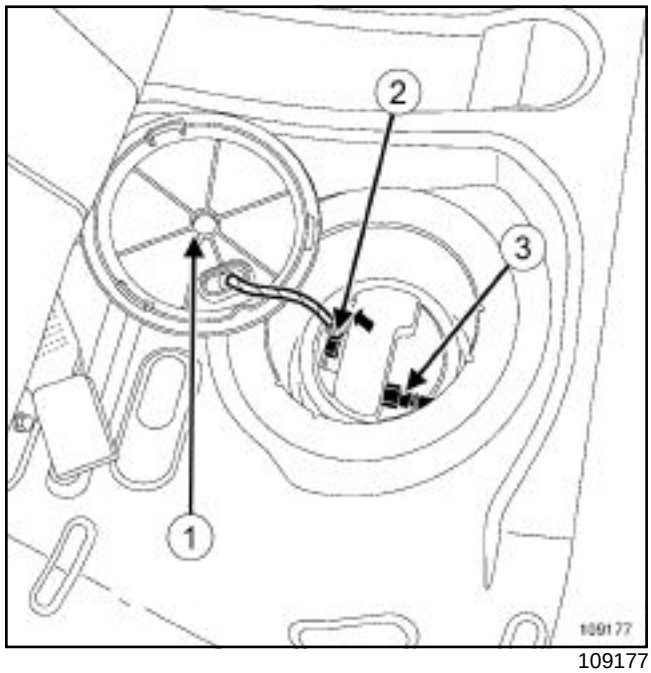

109177

Remove the inspection flap cover (**1**).

Disconnect:

- the electrical connector (**2**),
- the quick-release union (**3**).

Prepare for fuel outflow.

X90, and K7J or K7M, and 710

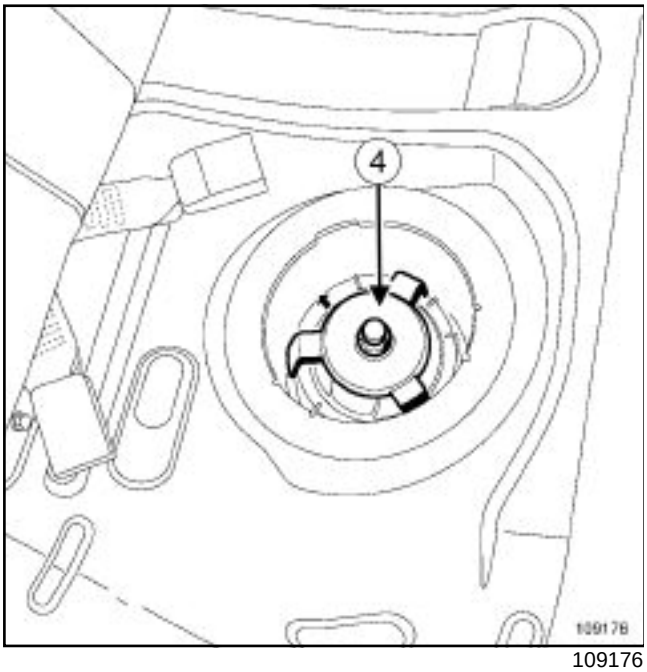

109176

Remove the nut of the pump/sender/filter assembly using tool **(Mot. 1397)**(**4**).

Remove the pump/sender/filter assembly, being careful not to damage the float.

WARNING

Refit the pump/sender/filter assembly nut as soon as the pump/sender/filter assembly has been removed to prevent any deformation of the fuel tank.

REFITTING

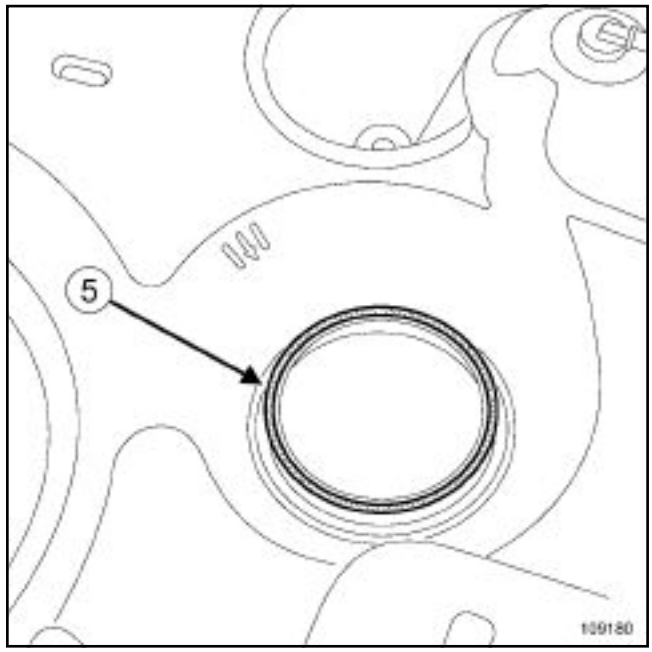

109180

Replace the O-ring seal (**5**).

X90, and K7J or K7M, and 710

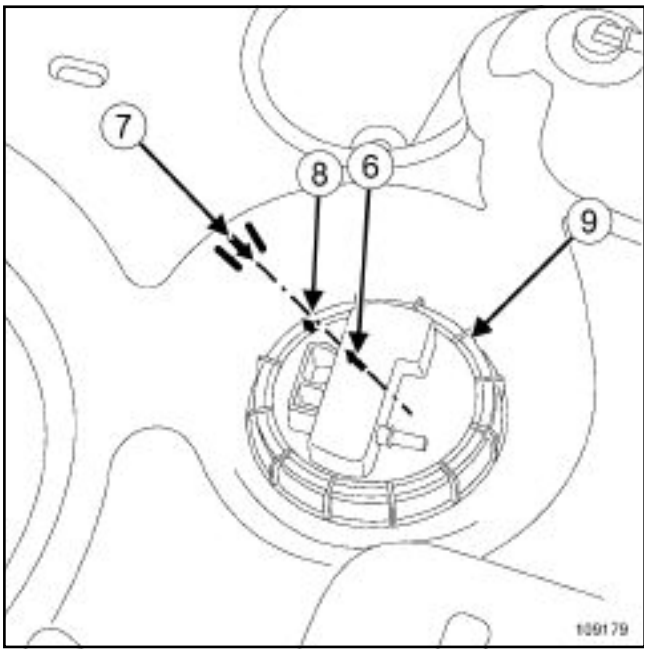

109179

Refit the pump/sender/filter assembly, aligning mark (**6**) on the pump/sender/filter assembly with mark (**7**) on the tank.

Position the nut (**9**).

Tighten the nut (**9**) until mark (**8**) on the nut is aligned with mark (**7**) on the tank and mark (**6**) on the pump/sender/filter assembly.

Proceed in the reverse order to removal.

Connect the battery starting with the positive terminal (see **MR 388 Mechanical systems, 80A, Battery: Removal - Refitting**).

Tighten to torque the **battery cover mounting bolts (4 Nm)**.

X40, and C1C or C1E or C1G or C1J or C2J or C3G or C3J or E6J or E7J or F2N or F3N – X57, and C1E or C3G or D7F or E5F or E6J or E7F or E7J or F2N or F3P or F7P or F7R – X64, and E7J or F3R or F4P or F4R or F5R or F7R or K4J or K4M or K7M – X48, and C2J or C2L or F2N or F2R or F3N or J6R or J6T or J7R or J7T – X54, and J7R or J7T or L7X or N7Q or N7U or Z7X – X56, and F3P or F3R or F4P or F4R or K4M or L7X or N7Q or Z7X – XTP, and A1M or C1J or F1N or J5R or J7T – X76, and 5DC or 5EE or D4D or D4F or D7D or D7F or E7J or K4M or K7J or K7M, and DOCUMENT PHASE 1

Special tooling required		
Mot. 1397	X76	Universal spanner for removing fuel gauge nut

Tightening torques ▽	
battery cover mounting bolts	**4 Nm**

IMPORTANT

During this operation, it is essential to:

- refrain from smoking or bringing red hot objects close to the working area,
- guard against petrol splashes caused by the residual pressure in the pipes,
- protect sensitive areas from fuel outflow.

REMOVAL

Disconnect the battery, starting with the negative terminal.

Fold up the rear bench seat into a vertical position.

Move the carpet to one side.

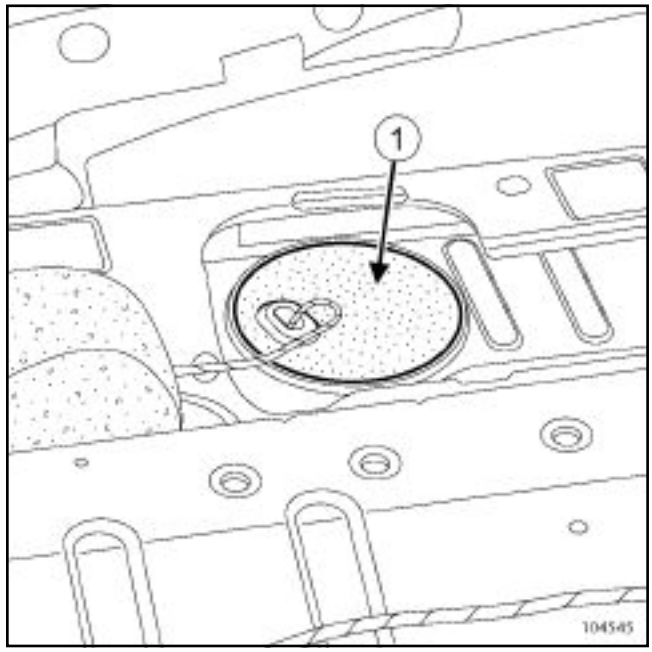

104545

Remove the inspection flap cover (**1**).

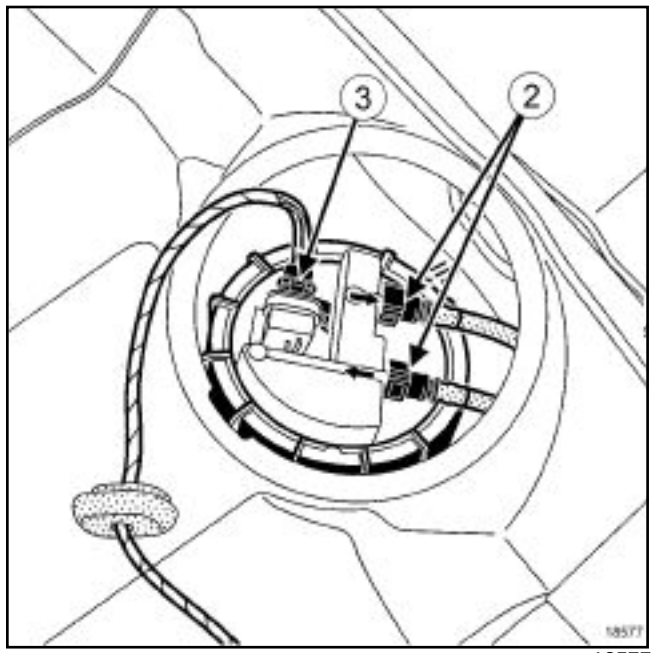

18577

Disconnect:

- the electrical connector (**3**),
- quick-release union(s) (**2**).

Prepare for fuel outflow.

X40, and C1C or C1E or C1G or C1J or C2J or C3G or C3J or E6J or E7J or F2N or F3N – X57, and C1E or C3G or D7F or E5F or E6J or E7F or E7J or F2N or F3P or F7P or F7R – X64, and E7J or F3R or F4P or F4R or F5R or F7R or K4J or K4M or K7M – X48, and C2J or C2L or F2N or F2R or F3N or J6R or J6T or J7R or J7T – X54, and J7R or J7T or L7X or N7Q or N7U or Z7X – X56, and F3P or F3R or F4P or F4R or K4M or L7X or N7Q or Z7X – XTP, and A1M or C1J or F1N or J5R or J7T – X76, and 5DC or 5EE or D4D or D4F or D7D or D7F or E7J or K4M or K7J or K7M, and DOCUMENT PHASE 1

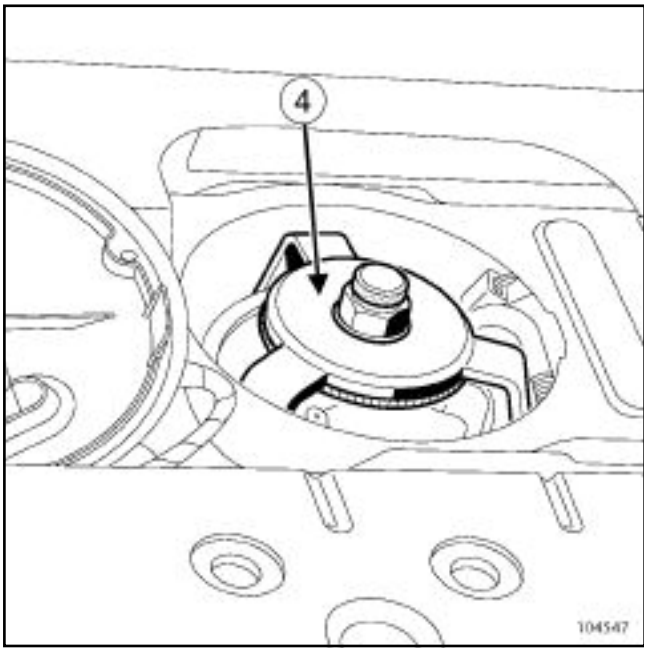

104547

Remove the mounting nut from the « pump/sender/filter » assembly using tool **(Mot. 1397)**(**4**).

Remove the « pump/sender/filter » assembly, being careful of the float.

WARNING

Refit the pump/sender/filter assembly nut as soon as the pump/sender/filter assembly has been removed to prevent any deformation of the fuel tank.

REFITTING

Replace the O-ring seal.

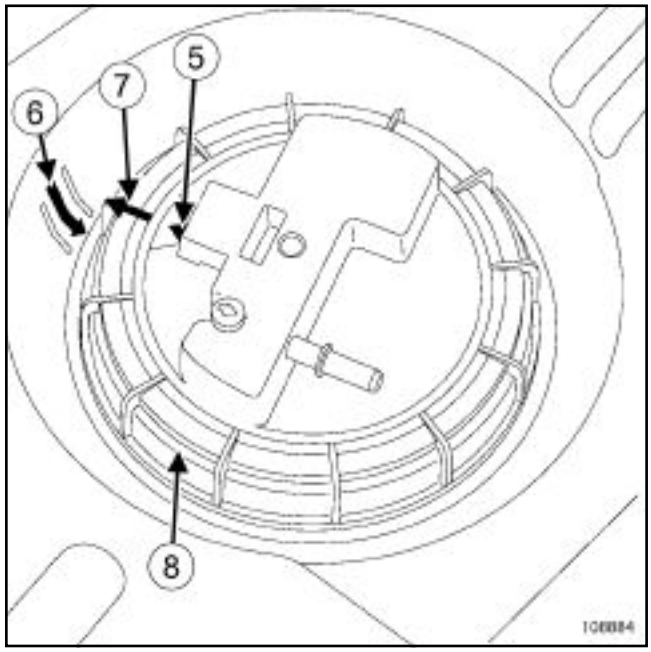

108884

Refit the « pump/sender/filter » assembly, aligning mark (**5**) on the « pump/sender/filter » assembly with mark (**6**) on the tank.

Position the nut (**8**).

Tighten the nut (**8**) until mark (**7**) on the nut is aligned with mark (**6**) on the tank and mark (**5**) on the « pump/sender/filter » assembly.

Proceed in the reverse order to removal.

Connect the battery, starting with the positive terminal (see **MR for the vehicle concerned, 80A, Battery: Special notes**).

Tighten to torque the **battery cover mounting bolts (4 Nm)**.

X74, and F4P or F4R or F5R or K4M or L7X

Special tooling required	
Mot. 1397	Universal spanner for removing fuel gauge nut

Tightening torques ▽	
battery cover mounting bolts	**4 Nm**

IMPORTANT

During this operation:

- refrain from smoking or bringing red hot objects near the working area,
- beware of fuel splashes when disconnecting the union,
- protect sensitive areas from fuel outflow.

REMOVAL

Disconnect the battery, starting with the negative terminal.

Lift up:

- the rear bench seat base,
- the carpet under the rear bench seat.

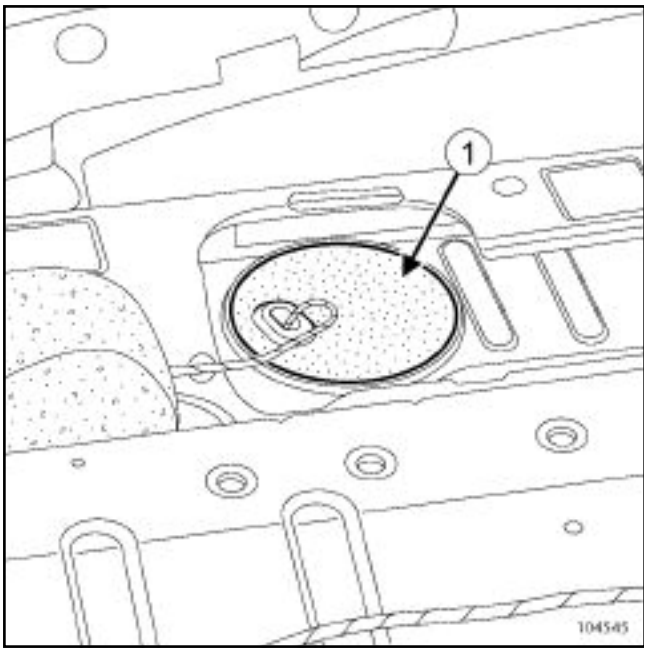

104545

Remove the inspection flap cover (**1**).

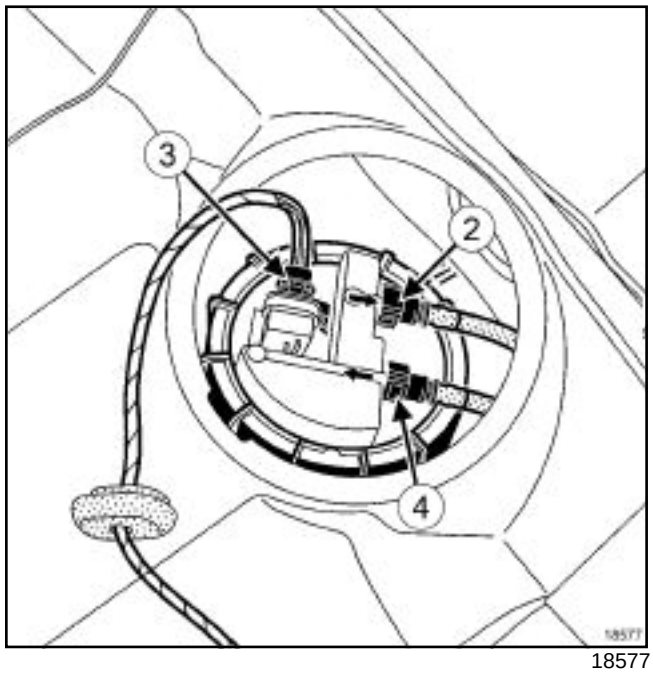

18577

Disconnect:

- the fuel sender connector (**3**),
- the quick-release union (**2**) for the fuel supply,
- the quick-release union (**4**) for the fuel return.

Prepare for fuel outflow.

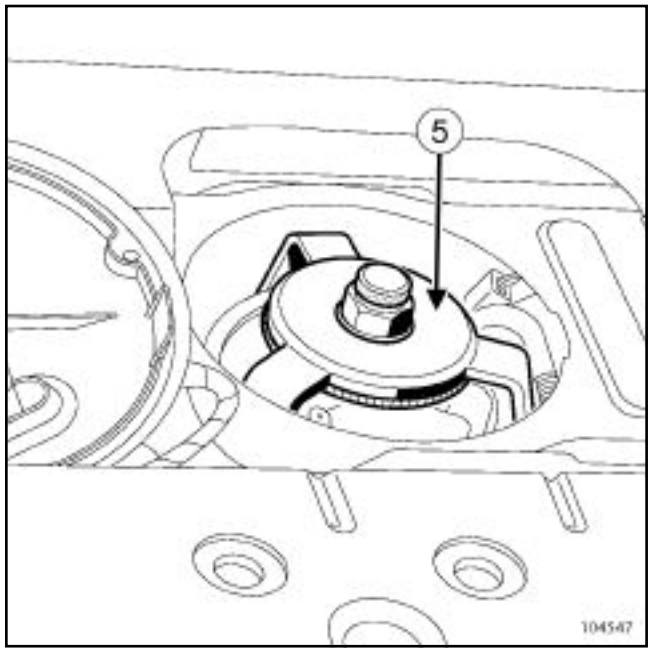

104547

Remove the mounting nut from the « pump/sender/filter » assembly using tool **(Mot. 1397)(5)**.

X74, and F4P or F4R or F5R or K4M or L7X

Remove the « pump/sender/filter » assembly, being careful of the float.

WARNING

Refit the « pump/sender/filter » assembly nut as soon as the « pump/sender/filter » assembly is removed to prevent any deformation of the fuel tank.

REFITTING

Replace the O-ring seal.

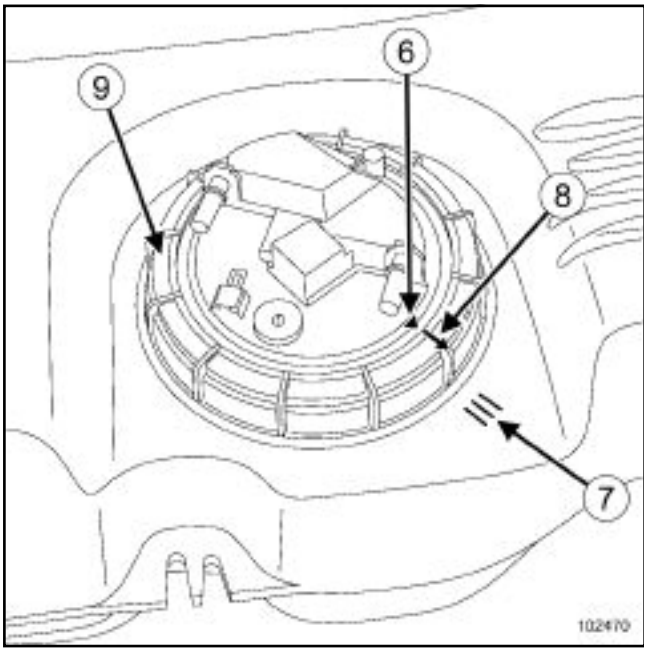

102470

Refit the « pump/sender/filter » assembly, aligning mark (**6**) on the « pump/sender/filter » assembly with mark (**7**) on the tank.

Position the nut (**9**).

Tighten the nut (**9**) until mark (**8**) on the nut is aligned with mark (**7**) on the tank and with mark (**6**) on the « pump/sender/filter » assembly.

Proceed in the reverse order to removal.

Connect the battery starting with the positive terminal (see **MR 395 Mechanical systems, 80A, Battery: Removal - Refitting**). .

Tighten to torque the **battery cover mounting bolts (4 Nm)**.

RENAULT

Technical Note 5008A

KXX, and K4J or K4M or K9K

Alternator pulley: replacement

KANGOO with AC: XCXX - K9K - K4J - K4M engines

CLIO II with AC: XBXX - K9K - K4J - K4M engines

MODUS: XPXX - K4J - K4M engines

MEGANE I with AC: XAXX - K4J - K4M engines

MEGANE II: XMXX - K4J - K4M engines

LAGUNA I with AC: X56X - K4J - K4M engines

LAGUNA II Phase I with AC: XGXX - K4J - K4M engines

Basic manuals: MR 312 - 307 - 325 - 337 - 339 - 364 - 385

Sub-section concerned: 16A

77 11 343 462 **JUNE 2005** **Edition Anglaise**

"The repair methods given by the manufacturer in this document are based on the technical specifications current when it was prepared.

The methods may be modified as a result of changes introduced by the manufacturer in the production of the various component units and accessories from which his vehicles are constructed."

All copyrights reserved by Renault.

The reproduction or translation in part of whole of the present document, as well as the use of the spare parts reference numbering system, are prohibited without the prior written consent of Renault.

© Renault s.a.s. 2005

Procedure for replacing a decoupling pulley on an alternator.

77 11 343 462 **JUNE 2005** **Edition Anglaise**

"The repair methods given by the manufacturer in this document are based on the technical specifications current when it was prepared.

The methods may be modified as a result of changes introduced by the manufacturer in the production of the various component units and accessories from which his vehicles are constructed."

All copyrights reserved by Renault.

The reproduction or translation in part of whole of the present document, as well as the use of the spare parts reference numbering system, are prohibited without the prior written consent of Renault.

© Renault s.a.s. 2005

Alternator pulley: replacement

Contents

16A **STARTING - LOAD**

Alternator pulley: Removal - Refitting 16A-1

Alternator pulley: Removal - Refitting

Special tooling required	
Mot. 1732	Tool for removing and refitting the alternator pulley

Tightening torques ▽	
the alternator decoupling pulley	**80 Nm**

I - PARTS AND CONSUMABLES FOR THE REPAIRS

Parts always to be replaced:

- the alternator belt,
- the tensioning roller,
- the mechanic tension wheel mounting bolts.

II - PRECAUTIONS DURING REPAIR

It is essential to replace an alternator decoupling pulley with a decoupling pulley.

III - EQUIPMENT REQUIRED

- Torque wrench capable of tightening a left-hand thread.

IV - REMOVAL

Remove the vehicle alternator (see **16A, Starting - charging, Alternator**

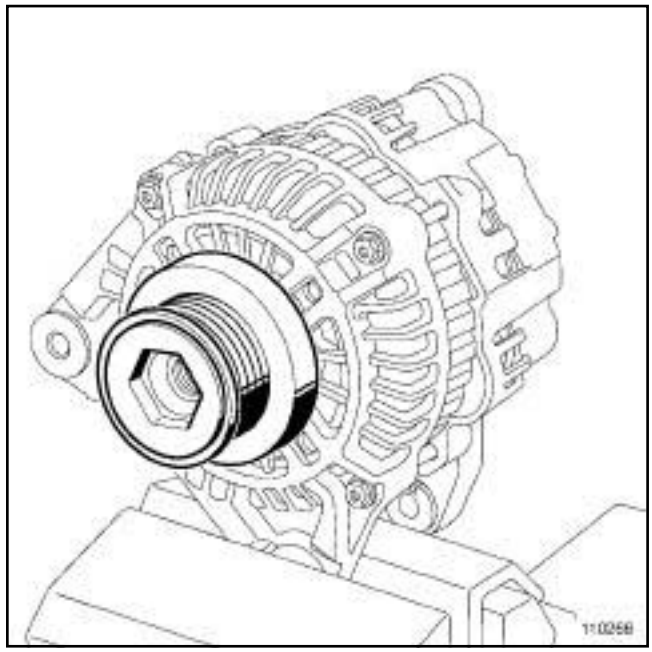

110266

Place the alternator in a vice jaw.

110276

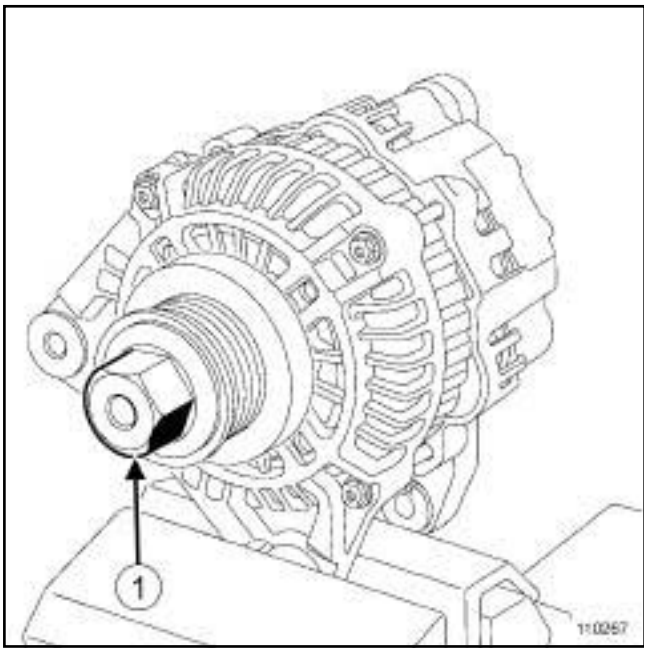

110267

Position the hexagon socket (**1**) from the tool box **(Mot. 1732)** in the alternator pulley.

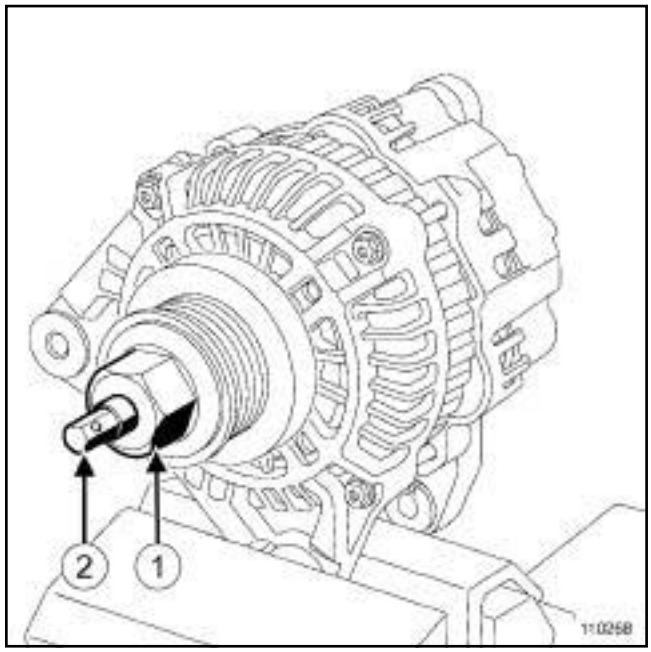

110268

Position adapter (**2**) from the tool kit **(Mot. 1732)** (corresponding to the alternator rotor recess) in the hexagon socket (**1**).

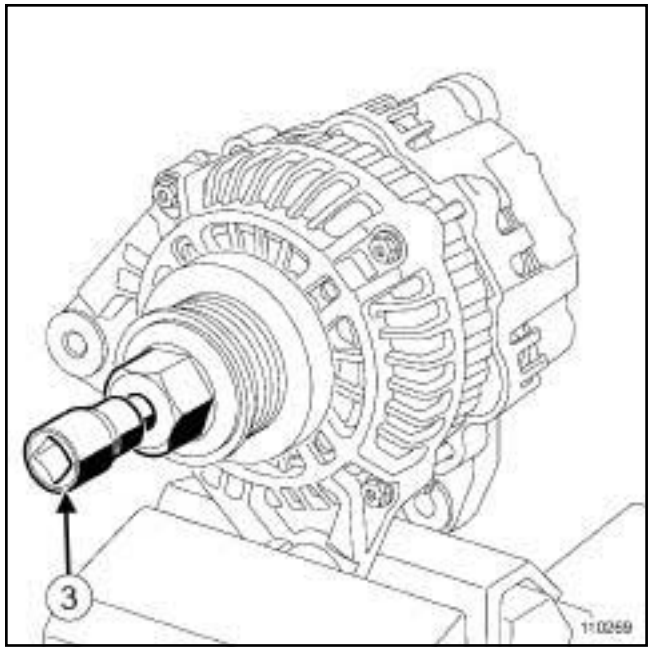

110269

Position the adapter holder (**3**) in socket ***(2)***.

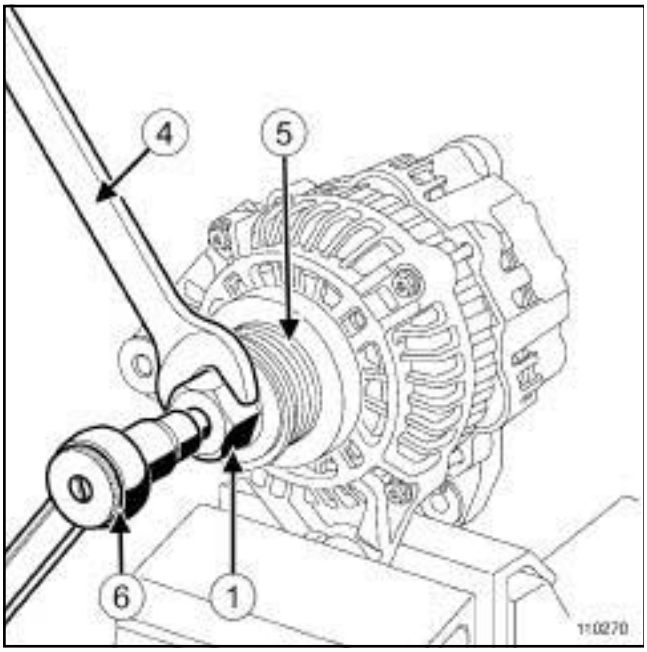

110270

Hold the hexagon socket (**1**) using an open-jawed spanner (**4**).

Loosen the decoupling pulley (**5**) using a ratchet, (**6**) (**turning it in the clockwise direction.**).

Remove the decoupling pulley.

V - REFITTING

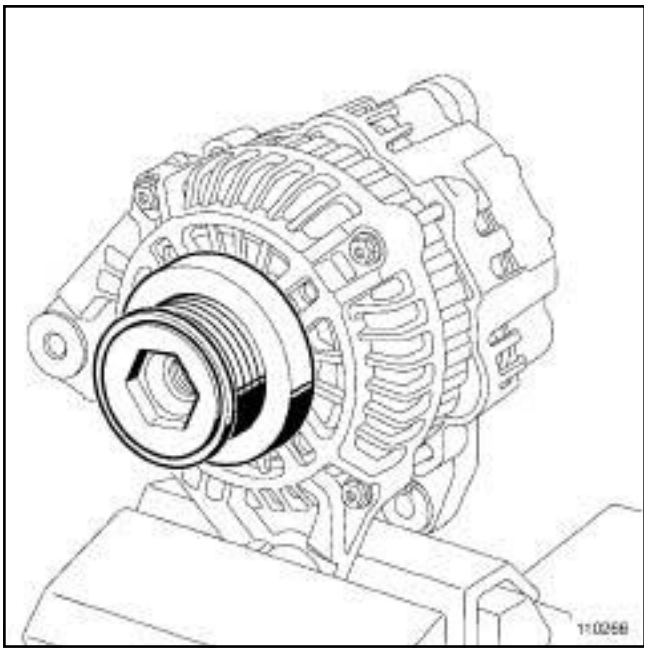

110266

Screw the new decoupling pulley onto the alternator rotor.

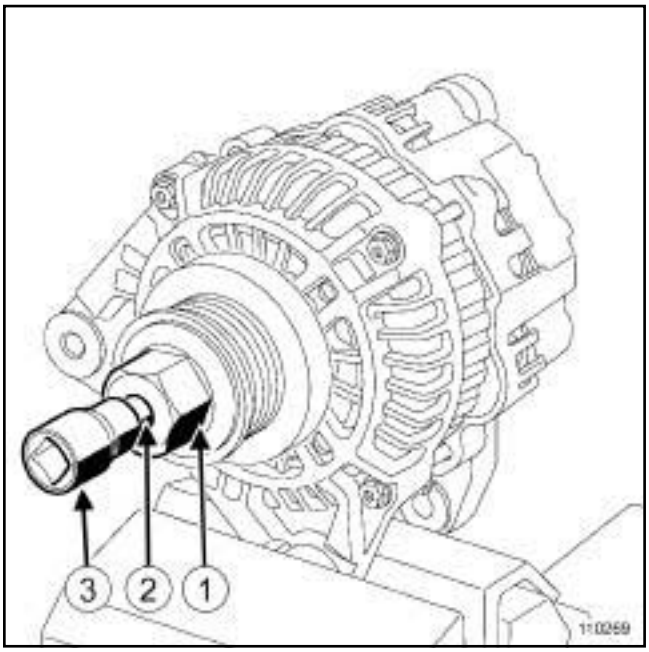

110269

Position:

- the hexagon socket in the alternator (**1**),
- the adapter (**2**) (corresponding to the alternator rotor mark),
- the adapter holder (**3**) on the adapter(**2**).

> Note:
>
> Check that the torque wrench is capable of tightening in an anticlockwise direction.

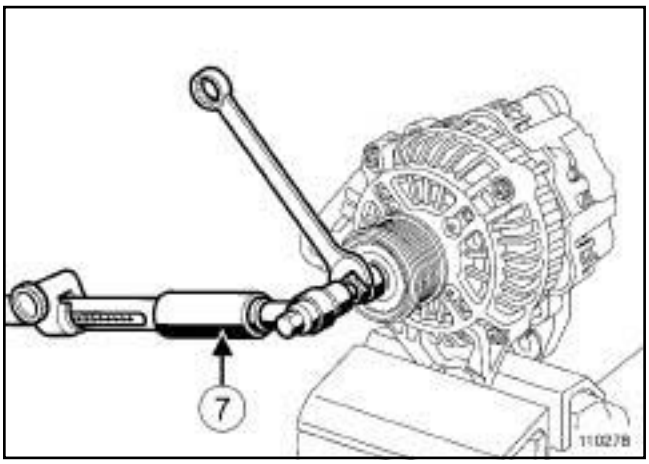

110278

Tighten to torque **the alternator decoupling pulley (80 Nm)** using a torque wrench(**7**).

Refit the vehicle alternator (see **16A, Starting - charging, Alternator**).

RENAULT

Technical Note 5011A

KXX, and K9K, and 260 or 262 or 270 or 272 or 700 or 702 or 704 or 706 or 708 or 710 or 712 or 722 or 728 or 729 or 750 or 752 or 760 or 762

Reprime high-pressure Delphi pumps on K9K engines

KANGOO: XCXX - Clio II: XBXX - MODUS: XPXX - MEGANE II: XMXX

Basic manuals: MR 325 - 380 - 337 - 345 - 385 - 364

Sub-section concerned: 13B

K9K engine with Delphi injection system

Diesel circuit repriming procedure using diagnostic tool when replacing high-pressure Delphi pumps.

77 11 343 342 **JUNE 2005** **Edition Anglaise**

"The repair methods given by the manufacturer in this document are based on the technical specifications current when it was prepared.

The methods may be modified as a result of changes introduced by the manufacturer in the production of the various component units and accessories from which his vehicles are constructed."

All copyrights reserved by Renault.

The reproduction or translation in part of whole of the present document, as well as the use of the spare parts reference numbering system, are prohibited without the prior written consent of Renault.

© Renault s.a.s. 2005

Reprime high-pressure Delphi pumps on K9K engines

Contents

Page

13B **DIESEL INJECTION**

High pressure pump: Removal - Refitting 13B-1

Equipment required
diagnostic tool

The operational procedure described below is only used following the replacement of a high-pressure pump on DELPHI injection systems numbers **VDiag 14, 18 et 20 (X65: CLIO II et X76 : KANGOO)** and **VDiag 48 (X84 : MEGANE II / SCENIC II et X77 : MODUS)**.

This operation requires the use of the15 **diagnostic tool**, from **version V50** onwards.

> Note
>
> In the case of earlier VDiag numbers, it is essential that the injection computer is reprogrammed (see **MR Fault finding** concerned).

This procedure is to be used after:

- refitting all the components removed in accordance with the repair procedure (see **13B, High-pressure pump: Removal - Refitting**) of the **Workshop Repair Manual** concerned,
- priming the fuel circuit using the priming bulb,
- reconnecting the battery and carry out the necessary programming,
- before starting the engine.

> **WARNING**
>
> Be sure never to start the engine until the pump has been reprimed with the diagnostic tool.
>
> Also comply with the job instructions provided to prevent the high-pressure pump from being damaged internally, due to running empty and with no load and no diesel lubrication.

PROCEDURE FOR RE-PRIMING THE DIESEL CIRCUIT

a Connect the diagnostic tool to the vehicle.

a Connect to the diesel injection computer.

a Run command **AC028 « FILL NEW PUMP »**(CLIO II and KANGOO).

a Run command **AC212 « FILL NEW PUMP »** (MEGANE II, SCENIC II and MODUS).

a Follow the instructions on the diagnostic tool until the end command has completed.

a Start the engine.

> Note
>
> The starting phase can last up to 20 seconds.

a If the engine does not start or if the startup sequence is interrupted:

- switch off the ignition,
- wait **30 secondes**,
- re-start the engine.

a Using the diagnostic tool, clear any faults stored by the injection computer.

RENAULT

Technical Note 5024A

FXX, and F5R or F8Q or F9Q - GXX, and G9T or G9U - KXX, and K9K - MXX, and M9R - PXX, and P9X - SXX, and S9U or S9W - ZXX, and ZD3

Cleaning the direct injection circuit before an operation.

F5R - F8Q - F9Q - G9T - G9U - K9K - M9R - P9X - S9U - S9W - ZD3 Engines

Sub-section concerned: 13B

77 11 343 742 **JUNE 2005** **Edition Anglaise**

"The repair methods given by the manufacturer in this document are based on the technical specifications current when it was prepared.

The methods may be modified as a result of changes introduced by the manufacturer in the production of the various component units and accessories from which his vehicles are constructed."

All copyrights reserved by Renault.

The reproduction or translation in part of whole of the present document, as well as the use of the spare parts reference numbering system, are prohibited without the prior written consent of Renault.

© Renault s.a.s. 2005

Cleaning the direct injection circuit before an operation.

Contents

Page

13B DIESEL INJECTION

Diesel injection: Precautions for repair 13B-1

FXX – GXX – KXX – MXX – SXX – PXX – ZXX

I - RISKS RELATING TO CONTAMINATION

The high pressure direct injection system is highly sensitive to contamination. The risks caused by contamination are:

- damage to or destruction of the high pressure injection system,
- a component seizing,
- a component not being properly sealed.

All After-Sales operations must be performed under very clean conditions. Having carried out an operation in good conditions means that no impurities (particles a few microns in size) have penetrated the system during dismantling.

The cleanliness principle must be applied from the filter to the injectors.

What are the sources of contamination?

- metal or plastic swarf,
- paint,
- fibres:
  - from cardboard,
  - from brushes,
  - from paper,
  - from clothing,
  - from cloth,
- foreign bodies such as hair,
- ambient air,
- etc.

WARNING
Cleaning the engine using a high pressure washer is prohibited because of the risk of damaging connections. In addition, moisture may collect in the connectors and create electrical connection faults.

1 - Cleaning cloths

Use lint free cleaning cloths (part no. **77 11 211 707**).

It is forbidden to use ordinary paper or cloth: when used, they leave bits of fluff or fragments or paper and thus contaminate the fuel circuit.

Each cloth can only be used once.

2 - Blanking plugs

Blanking plugs are used to prevent impurities from entering the fuel circuit once it has been opened.

A set of blanking plugs can only be used on one occasion and must be thrown away afterwards: they become dirty after use and cleaning them does not make them reusable.

Plugs that are not used must also be thrown away (do not keep them for other operations on the injection system).

Part numbers for blanking plug sets:

- F5R: **77 01 206 382**
- F8Q: **77 01 206 340**
- F9Q: **77 01 208 229**
- G9T and G9U: **77 01 208 229**
- K9K (injection **DELPHI**): **77 01 206 804**
- K9K (injection **SIEMENS**): **77 01 476 857**
- M9R: **77 01 209 062**
- P9X: **77 01 474 730**
- ZD3: **77 01 208 229**

3 - Protective bags

Use plastic bags which can be repeatedly hermetically sealed with adhesive tape. These types of bags should be used to store parts that are to be removed and reused. Stored parts will therefore be less subject to the risk of impurities.

These bags can only be used once: once they have been used, they are to be discarded.

4 - Cleaning products

Two cleaning products can be used:

- an injector cleaning product (part no. **77 11 224 188**),
- an aerosol spray brake cleaning product (part no. **77 11 226 128**).

When using the injector cleaning product make sure that you also have to hand a brush in good condition (bristles should not fall out easily) as well as a clean container.

Note:
Use a new injector cleaning product for each operation (cleaning products that have been used become contaminated).

FXX – GXX – KXX – MXX – SXX – PXX – ZXX

II - ADVICE TO BE FOLLOWED BEFORE ANY OPERATION

1) Carry out operations in clean working areas and ensure that removed parts are protected from dust and impurities by placing them in bags that can be hermetically sealed.

2) Before any operation, always order the following from the Parts Department:

- **une collection de bouchons de propreté neuve**, specific to the engine,
- a sufficient number of lint free **lingettes de nettoyage**.
- one of two **produits de nettoyage** for fuel pipe unions,
- **les pièces à remplacer systématiquement** after each removal operation; these are detailed in the operation procedures specific to each vehicle (see the relevant Workshop Repair Manual).

3) Wear protective glasses with side protection in order to avoid cleaning products coming into contact with your eyes.

4) Wear protective gloves made from latex so that cleaning products do not come into contact with your skin for a long time.

> Note:
>
> If you use protective gloves made from leather, cover them with latex gloves.

5) Protect the following before any operation on the injection system, using, for example, plastic bags or clean cloths:

- the accessories and timing belts,
- electrical accessories (starter, alternator, power assisted steering pump, sensors and electrical connectors),
- the flywheel face.

III - INSTRUCTIONS TO BE FOLLOWED DURING THE OPERATION

Wash your hands before and during the operation.

Change the latex gloves when they become soiled or damaged.

All components removed from the injection system must be stored in a hermetically sealed plastic bag once they have been capped.

Hermetically seal the bag with adhesive tape, even if you need to open the bag shortly afterwards: ambient air can be a source of pollution.

It is strictly forbidden to use a brush, cleaning product, air gun, swab or standard cloth after the fuel circuit has been opened: these items are likely to allow impurities to enter the system.

If a component is to be replaced by a new one or refitted after having been stored in a plastic bag, you should only unwrap the component when it is time to position it on the vehicle.

IV - CLEANING

There are two procedures for cleaning the fuel circuit before opening it for an operation.

These procedures allow you to clean the fuel circuit in a way that prevents contamination: they both produce the same result and neither is preferred over the other.

1 - Cleaning using injector cleaning product

With reference to the operation procedures specific to the vehicle (see the relevant Workshop Repair Manual), make sure that you can access the unions to be opened.

Protect the areas susceptible to fuel flow.

Pour the injector cleaning product into a clean container.

> **IMPORTANT**
>
> Wear latex gloves when using the cleaning product.

Dip a clean brush into the container, making sure that no bristles are left in the cleaning product.

> **IMPORTANT**
>
> Wear glasses with side protection during the operation.

Carefully clean the unions to be opened using the brush and injector cleaning product.

Blow compressed air over the cleaned parts (tools, workbench, parts, unions and injection system area). Check that no bristles from the brush have come away and that the area is clean.

Wipe the cleaned sections with new cloths.

Open the circuit at the union and fit the appropriate blanking plugs straight away.

WARNING

To prevent impurities from entering, once the fuel circuit has been opened, it must not be blasted with compressed air. Only use cleaning cloths, if necessary.

2 - Cleaning with brake cleaning product

With reference to the operation procedures specific to the vehicle (see the relevant Workshop Repair Manual), make sure that you can access the unions to be opened.

Protect the areas susceptible to fuel flow.

IMPORTANT

Wear latex gloves when using the cleaning product.

IMPORTANT

Wear glasses with side protection during the operation.

Spray the brake cleaning product on the unions to be opened.

Carefully clean the unions to be opened using new cloths.

Blow compressed air over the cleaned parts (tools, workbench, parts, unions and injection system area). Check that no bristles from the brush have come away and that the area is clean.

Open the circuit at the union and fit the appropriate blanking plugs straight away.

WARNING

To prevent impurities from entering, once the fuel circuit has been opened, it must not be blasted with compressed air. Only use cleaning cloths, if necessary.

RENAULT

Technical Note 5031A

X84, and B84 or C84 or G84 or J84 or S84

New negative battery terminal

MEGANE II: XMXX

SCENIC II: JMXX

Basic manuals: MR 364 - 370

Sub-section concerned: 801

Modification of the battery removal - refitting procedure following fitting of new negative terminal to vehicles since 10 January 2005.

77 11 343 882 **JUNE 2005** **Edition Anglaise**

"The repair methods given by the manufacturer in this document are based on the technical specifications current when it was prepared.

The methods may be modified as a result of changes introduced by the manufacturer in the production of the various component units and accessories from which his vehicles are constructed."

All copyrights reserved by Renault.

The reproduction or translation in part of whole of the present document, as well as the use of the spare parts reference numbering system, are prohibited without the prior written consent of Renault.

© Renault s.a.s. 2005

New negative battery terminal

Contents

Page

80A **BATTERY**

Battery : Removal - Refitting 80A-1

Special tooling required	
Ele. 1593	Battery tester. Midtronics R 330

Tightening torques ▽	
fuse cable nut	**5 Nm**
positive terminal nut	**6 Nm**
clamp mounting nut	**12 Nm**
negative terminal nut	**6 Nm**
negative terminal stud nuts	**6 Nm**
battery cover mounting bolts	**5 Nm**

Note:

There are two types of battery terminal depending of the fabrication date of the vehicle:

- vehicles produced before **10/01/05**: procedure 1,
- vehicles produced after **10/01/05**: procedure 2.

Negative battery terminal before 10/01/05

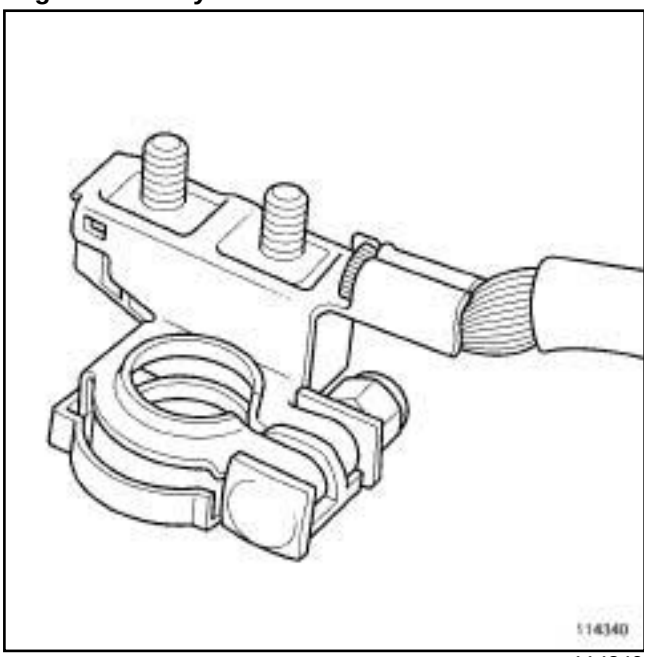

114340

Negative battery terminal after 10/01/05

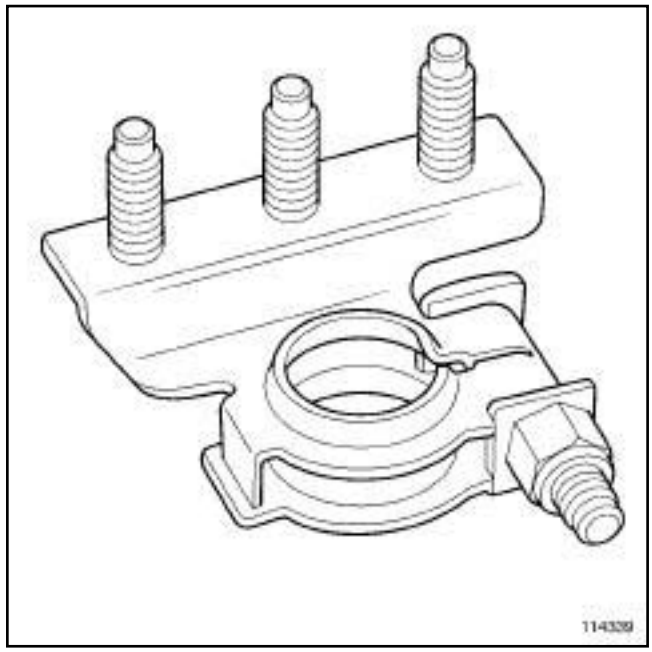

114339

REMOVAL (PROCEDURE 1)

I - REMOVAL PREPARATION OPERATION

WARNING

Before disconnecting the battery:

- switch off the ignition,
- switch off all consumers,
- wait for the engine cooling fan to stop,
- if the vehicle is fitted with Carminat, wait for the system to shut down after switching off the + after ignition feed (approximately **1 minute**).

WARNING

The visual indicator on some batteries deteriorates substantially over time, take care not to use it after the initial delivery of the vehicle to the customer. Use tool **(Ele. 1593)**.

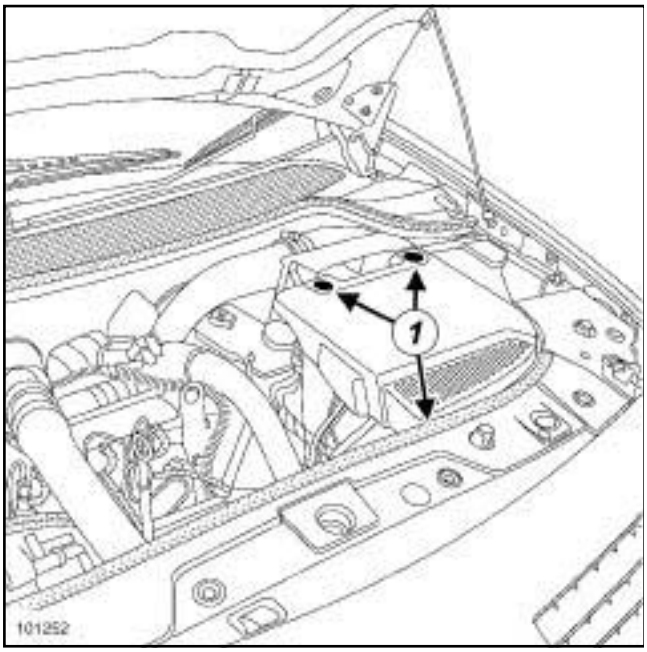

101252

Remove:

- the battery cover fasteners (**1**),
- the battery cover.

II - OPERATION FOR REMOVAL OF PART CONCERNED

1 - Disconnection

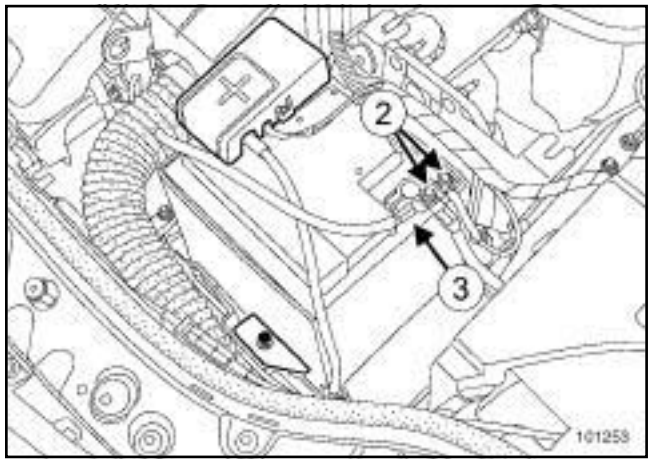

101253

> Note:
>
> Before disconnecting the wiring of the negative terminal, note the position of the wires.

Remove:

- the negative terminal stud nuts (**2**),
- the negative battery terminal nut (**3**).

Remove the negative terminal.

2 - Removal

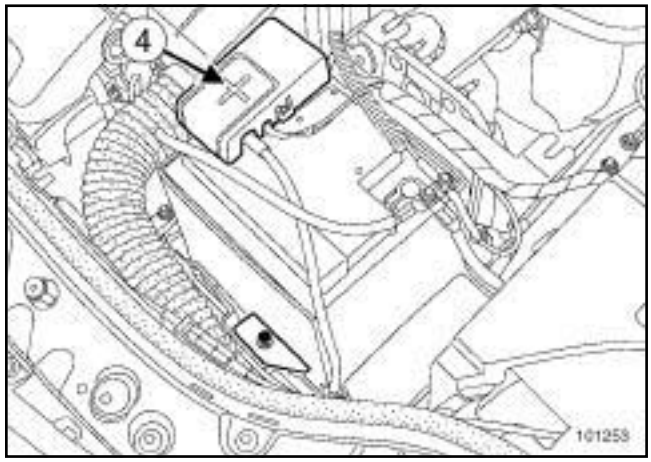

101253

Remove the positive terminal cover (**4**).

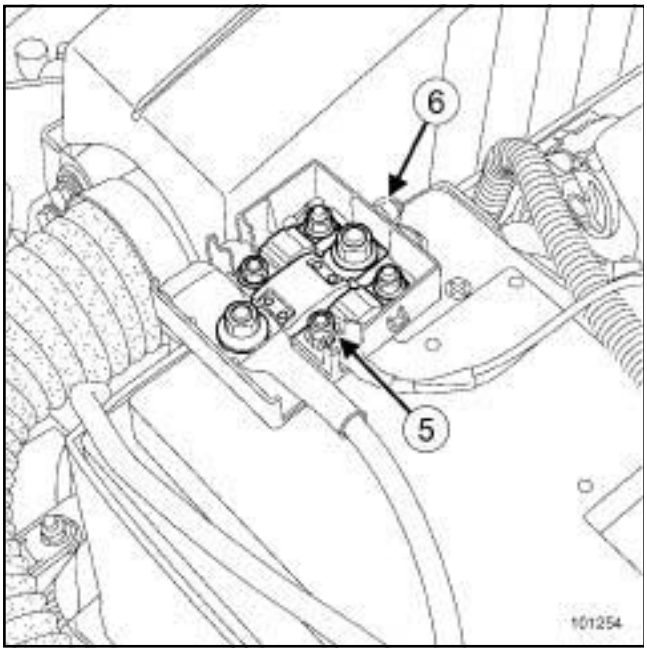

101254

Remove:

- the fuse cable nut (**5**),
- the fuse cable.

Undo the positive battery terminal nut (**6**).

Remove the « positive terminal-fuse mounting » assembly.

> **WARNING**
> The fuse mounting is fragile.

Unclip the degassing pipe.

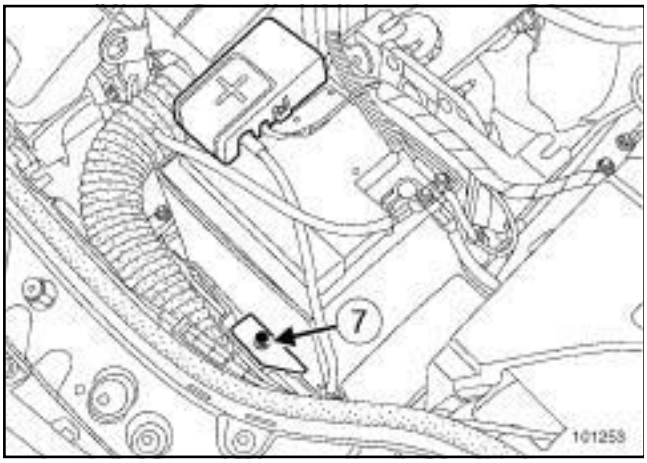

101253

Remove:

- the clamp mounting nut (**7**),
- the battery clamp,
- the battery.

3 - Replacement

Check that the battery needs replacing (see **NT 6014A, Ignition charge, 16A, Testing the charge circuit**).

Remove the protective battery cover.

REFITTING (PROCEDURE 1)

I - REFITTING PREPARATION OPERATION

Test the battery (see **NT 6002A, Battery, 80A, Battery: Test**).

> **IMPORTANT**
> Poor contact due to poor tightening may lead to problems at ignition or charging, create sparks, expose the battery and cause acid to be spilled.

(see **Battery: Safety**).

II - REFITTING OPERATION FOR PART CONCERNED

1 - Replacement

Position the protective battery cover.

2 - Refitting

Correctly position the battery in its housing.

Undo the positive battery terminal.

Push the battery terminal fully onto the battery terminal post.

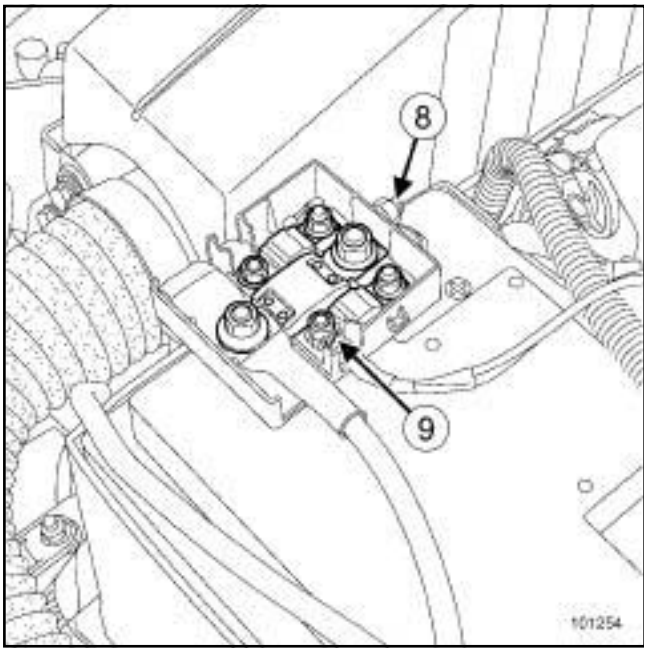

101254

Take care that the square washer does not become skewed.

Tighten to torque the **positive terminal nut (6 Nm)**(**8**).

Position the fuse cable.

Tighten to torque the **fuse cable nut (5 Nm)**(**9**).

Position the positive terminal cover.

Connect the degassing pipe.

> **WARNING**
> It is dangerous to tighten the battery clamp too much, as the tray may deform or break,
>
> Insufficient tightening of the battery clamp allows movement, and the battery tray may wear from friction or break from an impact and cause acid to be spilled.

(see **Battery: Safety**).

Position the battery clamp.

Tighten to torque the **clamp mounting nut (12 Nm)**.

3 - Connection

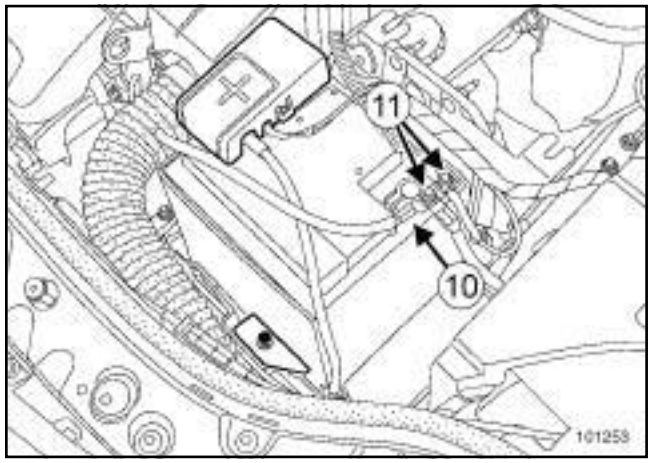

101253

Loosen the negative battery terminal.

Take care that the square washer does not become skewed.

Push the battery terminal fully onto the battery terminal post.

Tighten to torque the **negative terminal nut (6 Nm)**(**10**).

> **WARNING**
> In order to avoid premature loosening of the stud nuts when removing the negative terminal cables, only allow a maximum of two terminals per stud, distributing them between the various studs when refitting.

Tighten to torque the **negative terminal stud nuts (6 Nm)**(**11**).

III - FINAL OPERATION

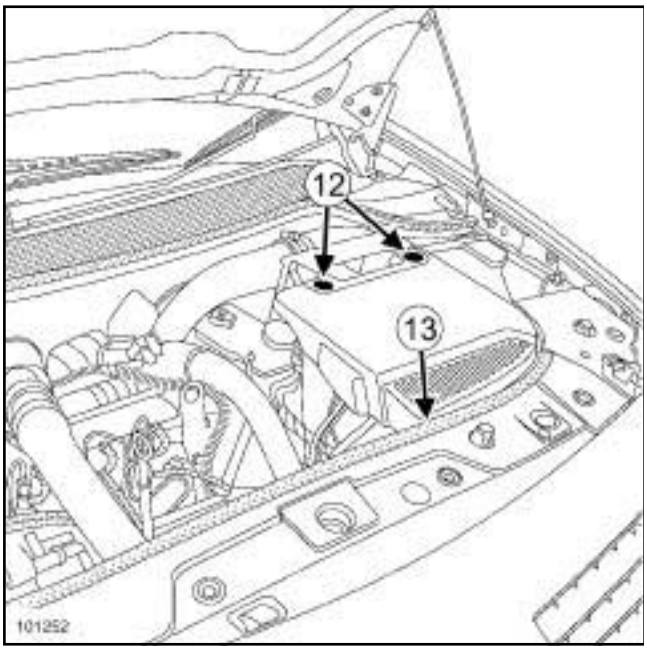

101252

Refit:

- the battery cover.
- the battery cover fasteners (**12**),

Tighten to torque the **battery cover mounting bolts (5 Nm)**(**12**).

Engage clip (**13**).

When the battery is refitted and after every time it has been disconnected, a certain number of simple programming operations, which do not require the diagnostic tool, will have to be carried out for the vehicle to work properly:

- set the time on the clock (except radio-navigation system),
- enter the four-digit radio or radio-navigation code (see **86A Radio, Entry level: security code**) or (see **83C On-board telematics system, Entry level navigation: security code**),
- initialise the one-touch electric window motors (see **87D Electric windows - Sunroof, electric window: initialisation**),
- initialise the electric sunroof motor (depending on the operation being performed) (see **87D Electric windows - Sunroof, Electric sunroof: initialisation**),
- initialise the electric power assisted steering (see **36B Power assisted steering, steering column: initialisation**).

Note:

To set the radio-navigation system time, enter the four-digit code, insert the navigation CD-ROM, then take the vehicle out to acquire the satellite signals. The time can then be set.

REMOVAL (PROCEDURE 2)

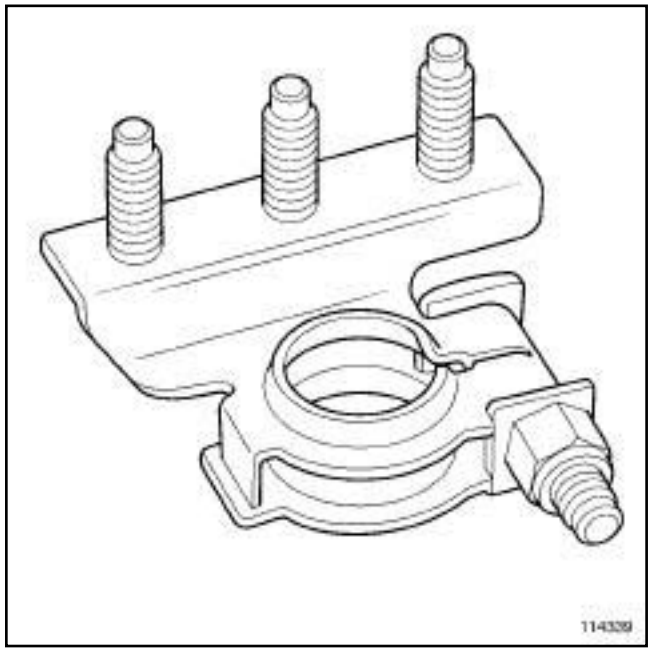

114339

Negative battery terminal after 10/01/05

I - REMOVAL PREPARATION OPERATION

WARNING

Before disconnecting the battery:

- switch off the ignition,
- switch off all consumers,
- wait for the engine cooling fan to stop,
- if the vehicle is fitted with Carminat, wait for the system to shut down after switching off the + after ignition feed (approximately **1 minute**).

WARNING

The visual indicator on some batteries deteriorates substantially over time, take care not to use it after the initial delivery of the vehicle to the customer. Use tool **(Ele. 1593)**.

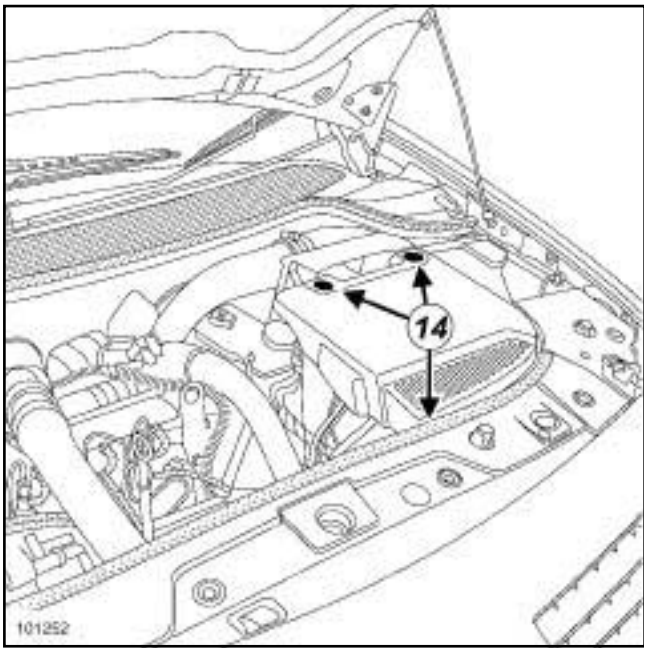

101252

Remove:

- the battery cover fasteners (**14**),
- the battery cover.

II - OPERATION FOR REMOVAL OF PART CONCERNED

1 - Disconnection

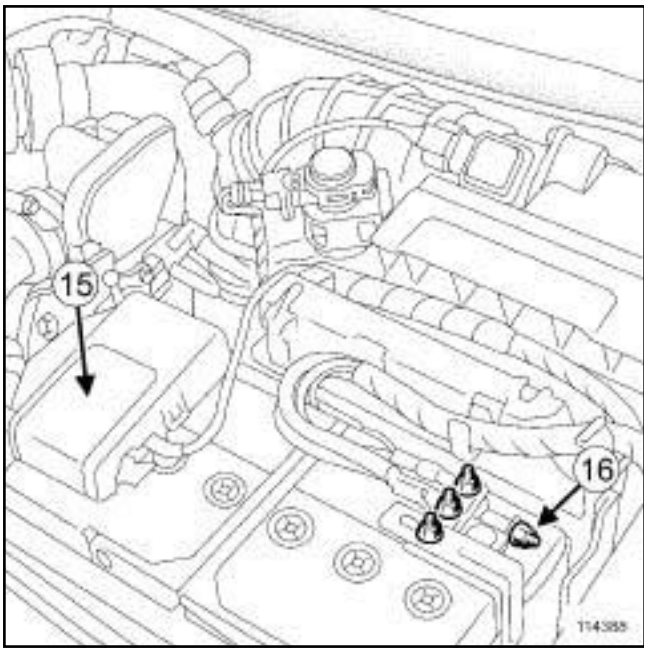

114388

Undo the negative battery terminal nut (**16**).

Remove the terminal.

2 - Removal

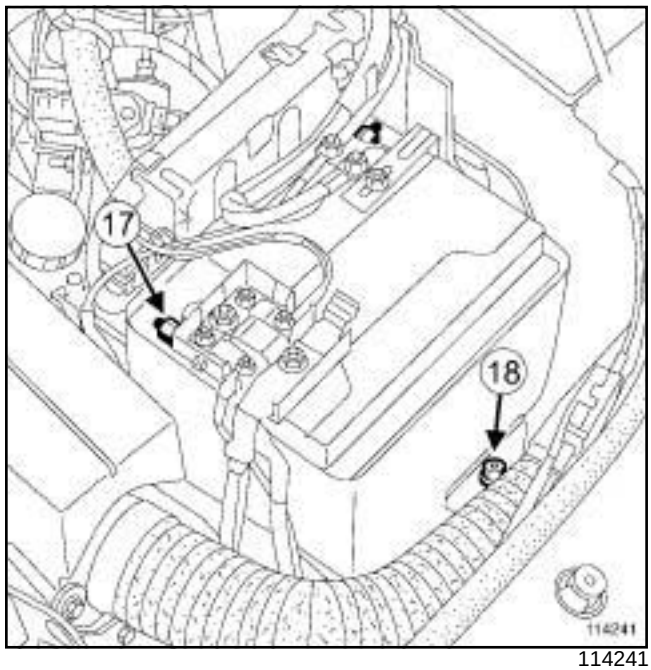

114241

Remove the positive terminal cover ***(15)***.

Undo the positive battery terminal nut (**17**).

Remove the terminal.

> **WARNING**
> The fuse mounting is fragile.

Unclip the degassing pipe.

Remove:

- the clamp mounting nut (**18**),
- the battery clamp,
- the battery.

3 - Replacement

Check that the battery needs replacing (see **NT 6014A, Ignition charge, 16A, Testing the charge circuit**).

Remove the protective battery cover.

REFITTING (PROCEDURE 2)

I - REFITTING PREPARATION OPERATION

Test the battery (see **NT 6002A, Battery, 80A, Battery: Test**).

> **IMPORTANT**
> Poor contact due to poor tightening may lead to problems at ignition or charging, create sparks, expose the battery and lead to acid spillages.

(see **Battery: Safety**).

II - REFITTING OPERATION FOR PART CONCERNED

1 - Replacement

Position the protective battery cover.

2 - Refitting

Correctly position the battery in its housing.

Undo the positive battery terminal.

Push the battery terminal fully onto the battery terminal post.

Take care the square washer does not become skewed.

Tighten to torque the **positive terminal nut (6 Nm)**.

Position the positive terminal cover.

Connect the degassing pipe.

> **WARNING**
> It is dangerous to tighten the battery clamp too much, as the tray may deform or break,
>
> Insufficient tightening of the battery clamp allows movement, and the battery tray may wear from friction or break from an impact and cause acid to be spilled.

(see **Battery: Safety**).

Position the battery clamp.

Tighten to torque the **clamp mounting nut (12 Nm)**.

3 - Connection

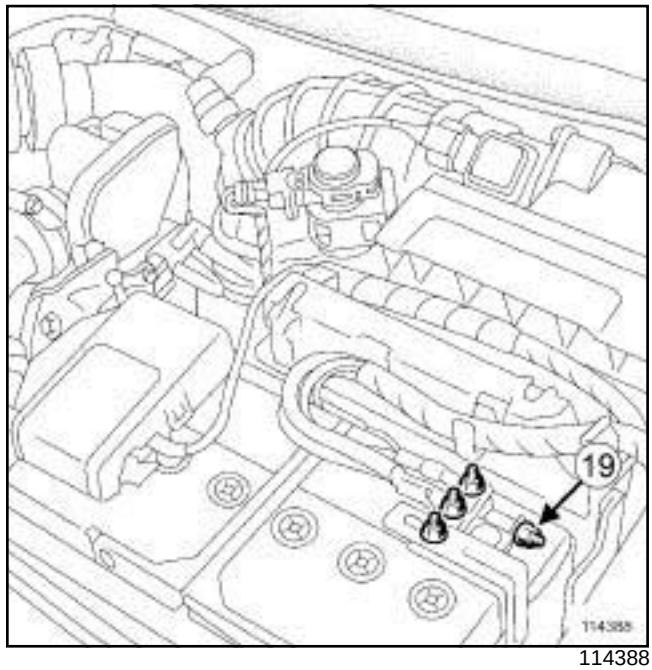

114388

Undo the negative battery terminal.

Take care that the square washer does not become skewed.

Push the battery terminal fully onto the battery terminal post.

Tighten to torque the **negative terminal nut (6 Nm)**(**19**).

> **WARNING**
> In order to avoid premature loosening of the stud nuts when removing the negative terminal cables, only allow a maximum of two terminals per stud, distributing them between the various studs when refitting.

Tighten to torque the **negative terminal stud nuts (6 Nm)**.

III - FINAL OPERATION

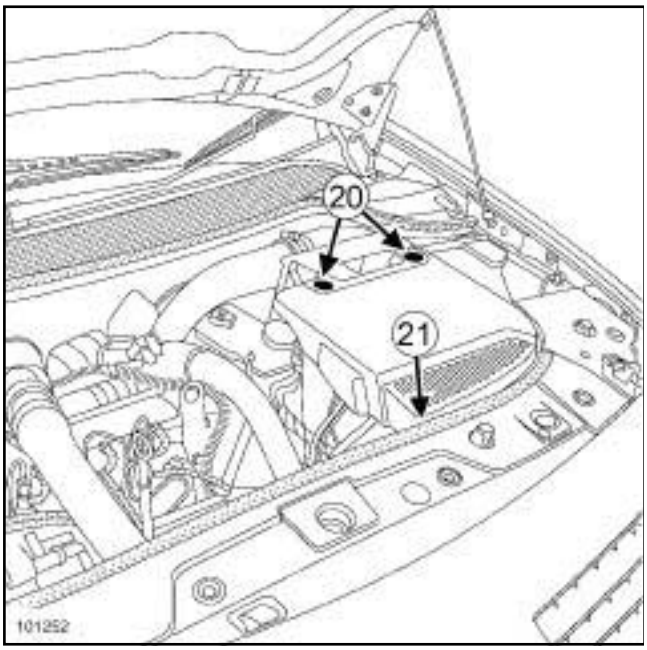

101252

Refit:

- the battery cover.
- the battery cover fasteners (**20**),

Tighten to torque the **battery cover mounting bolts (5 Nm)**(**20**).

Engage clip (**21**).

When the battery is refitted and after every time it has been disconnected, a certain number of simple programming operations, which do not require the diagnostic tool, will have to be carried out for the vehicle to work properly:

- set the time on the clock (except radio-navigation system),
- enter the four-digit radio or radio-navigation code (see **86A Radio, Entry level: security code**) or (see **83C On-board telematics system, Entry level navigation: security code**),
- initialise the one-touch electric window motors (see **87D Electric windows - Sunroof, electric window: initialisation**),
- initialise the electric sunroof motor (depending on the operation being performed) (see **87D Electric windows - Sunroof, Electric sunroof: initialisation**),
- initialise the electric power assisted steering (see **36B Power assisted steering, steering column: initialisation**),

Note:

To set the radio-navigation system time, enter the four-digit code, insert the navigation CD-ROM, then take the vehicle out to acquire the satellite signals. The time can then be set.

	Type	S/Section
All Types	**XXX X**	**82A**

This note cancels and replaces Technical Note 3315E part no. 77 11 206 336

01B-82A-86A-86C **CODE SUPPLY PROCEDURE**

- Engine: **XXX**
- Gearbox: **XXX**

Basic manual:

"The repair procedures given by the manufacturer in this document are based on the technical specifications current when it was prepared.

The methods may be modified as a result of changes introduced by the manufacturer in the production of the various component units and accessories from which his vehicles are constructed."

All rights reserved by **RENAULT s.a.s.**

Copying or translating, in part or in full, of this document or use of the service part reference numbering system is forbidden without the prior written authority of **RENAULT s.a.s.**

© Renault s.a.s. 2005

Since 1st June 2005 there has been a single service available for supplying the following codes:

- Engine immobiliser
- Radio
- Reprogramming key (NRE)
- Video network

This service is Code Management on RENAULT NET or importers' RENAULT NET.

Information required for use:

Immobiliser code:
VIN (17 characters)
Key head number (old vehicles, 8 characters maximum)
Programming key supplied by the diagnostic tool for CLIO III from CD 59.

> Note:
> This key head number is required if the 4-digit code supplied by the code server does not correspond to the vehicle; the key head number + the VIN can be used to recalculate the new 4-digit code.

Radio code:
VIN (17 characters)
Pre-code or radio part number reference

Pre-code if the first code obtained using the VIN is not correct
Pre-code = 1 letter + 3 digits

Radio without pre-code:
Radio supplier: Philips/Blaupunkt/Pioneer/Alpine/Becker

Radio part number reference:
Philips = RN + 3 digits + 2 letters + 7 digits
Blaupunkt = BP + 4 digits + 1 letter + 7 digits
Pioneer = RN2006 + 1 letter + 7 digits or 1 letter + 7 digits (old models)
Alpine = AL + 9 digits
Becker = B or E + 7 digits

Video network code:
VIN (17 characters)
4-digit code supplied by the video network

Reprogramming key:
VIN (17 characters)
Reprogramming key supplied by the diagnostic tool

Using the Code Management server to find codes:

1) Main menu in Renault Net, under Applications you will find Code Management:

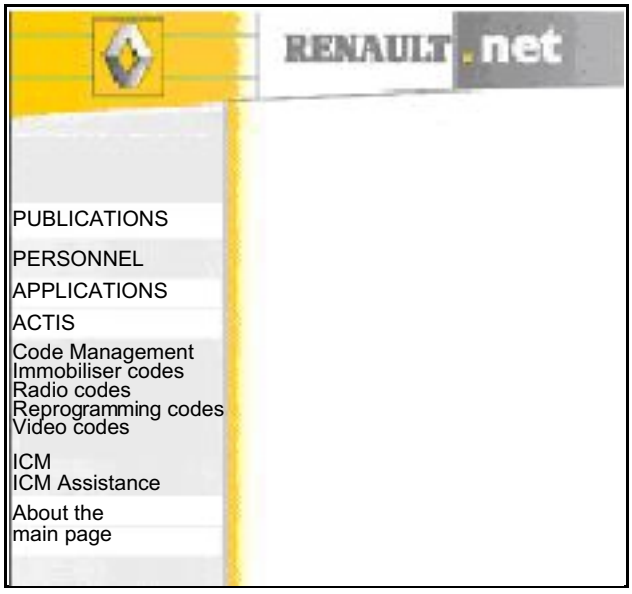

2) Finding a code in Code Management:

2.1 Immobiliser code:

→ enter VIN + programming key supplied by the diagnostic tool for CLIO III from CD 59.
→ confirm with Search button
→ immobiliser code supplied as:
4 digits (old vehicles)
8 digits (MEGANE 1 and AVANTIME only)
12 characters (digits and letters)
13 characters (digits and letters for CLIO III from CLIP CD 59)

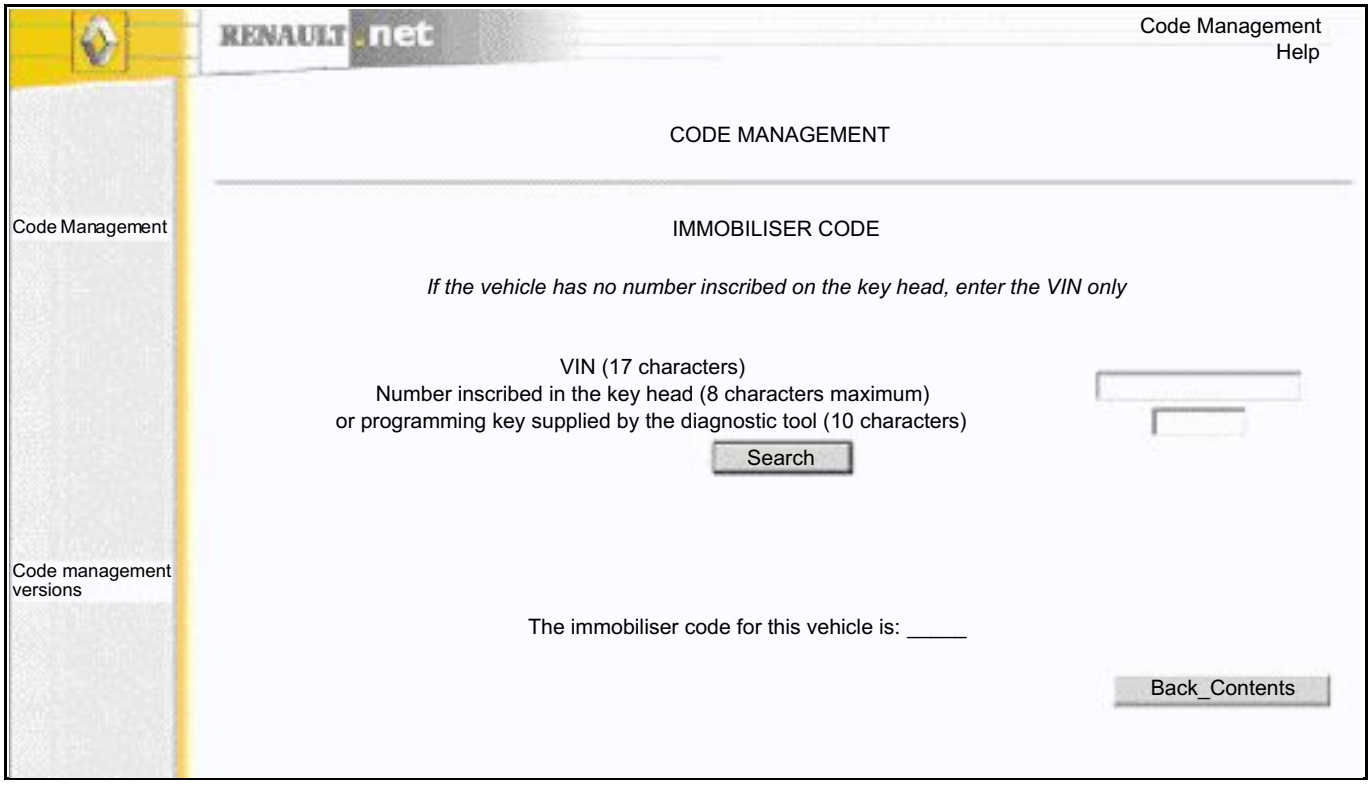

If the immobiliser code supplied is not correct and you have the key head code (old vehicles), search again using the same VIN, the following screen appears:

1 Search again for the immobiliser code for this vehicle
2 There is a problem with the immobiliser code supplied

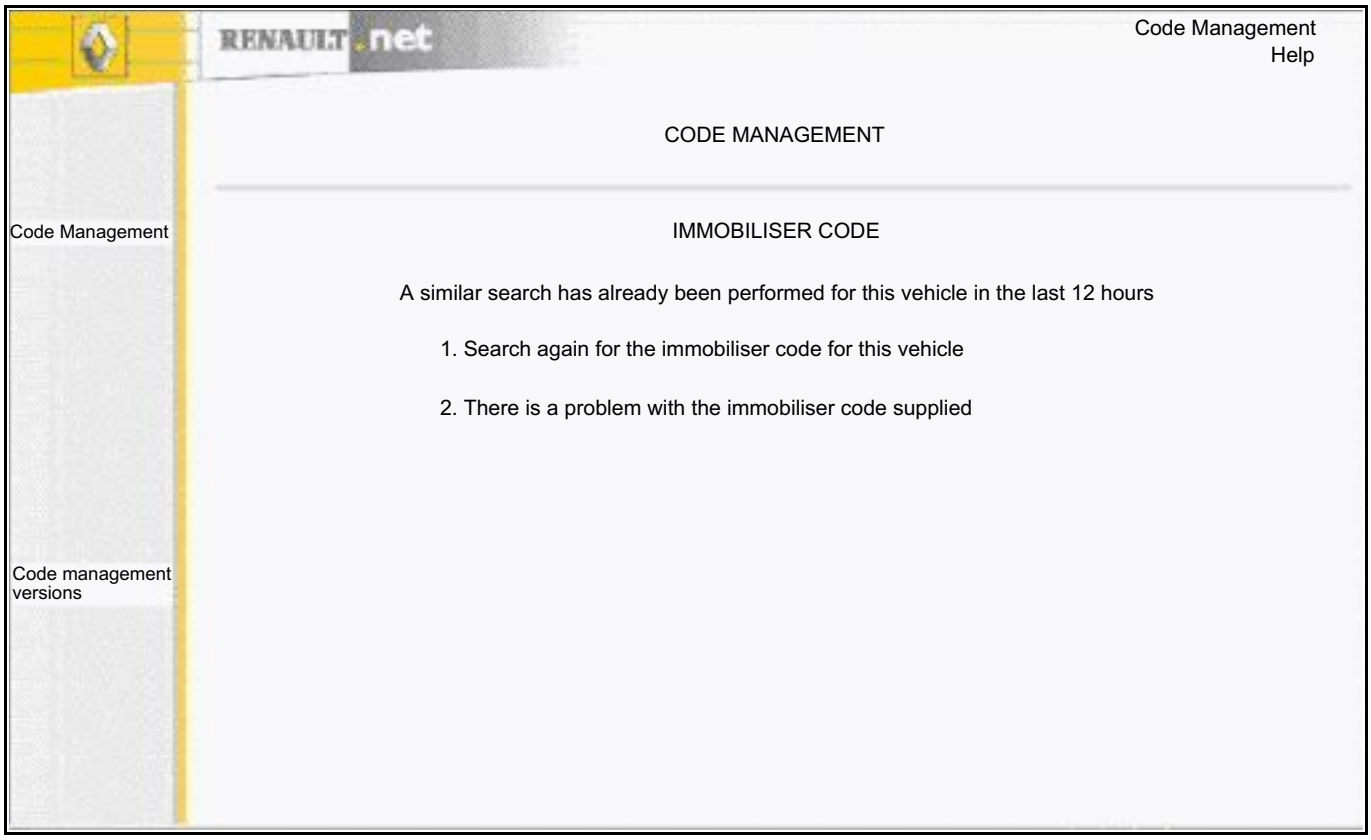

→ Select option 2
→ the following screen appears
→ select Back to entry

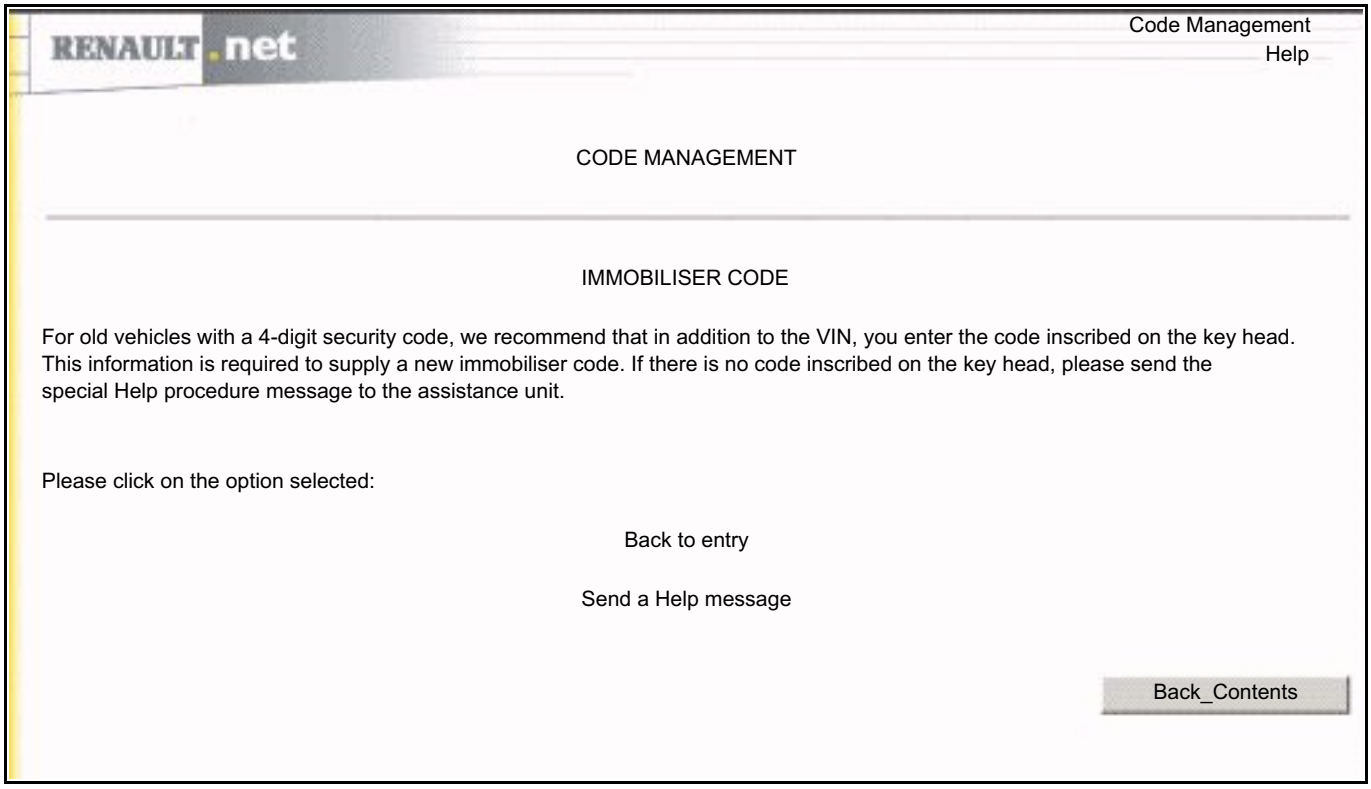

Specific screen for CLIO III from CLIP CD 59.

→ two options available:

1 Display the immobiliser code for this vehicle contained in the database
2 Display the immobiliser code obtained using the VIN and the pre-code inscribed on the key head (for old vehicles with a 4-digit immobiliser code)

→ select option 2

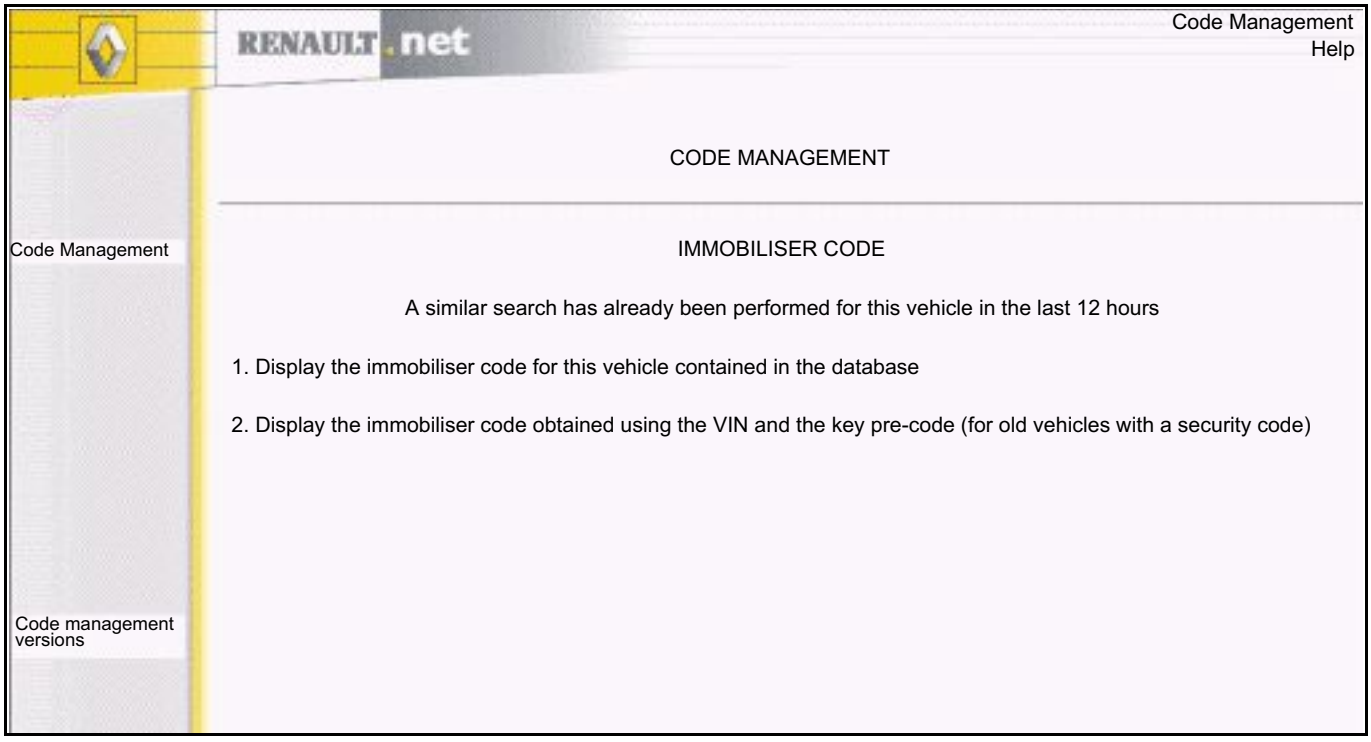

→ re-enter the VIN
→ enter the key head code (inscribed on the key head) 8 characters maximum
→ click the search button
→ immobiliser code supplied

If you cannot obtain the correct code you must send a Help message:

FIELD	INPUT
*To:	SOSCodes
*From:	
Subject:	Help message
MTA Host:	mail-dcs.fr.renault.com

Message Text:

VIN: VF1BB1DEA33126191

Number inscribed on the key head:

Description of the problem: The user has already requested the immobiliser code or the radio code for the vehicle in the last 12 hours and this is incorrect.

The following three fields must be completed to obtain a response:

Dealership code:
Dealership name:
Contact:

Telephone (optional):

Send Message

→ Complete the mandatory fields; the other fields are completed automatically.
→ click the Send message button to send the message to Technical Assistance.

2.2 Radio code:

→ enter the VIN only
→ click the search button
→ radio code supplied

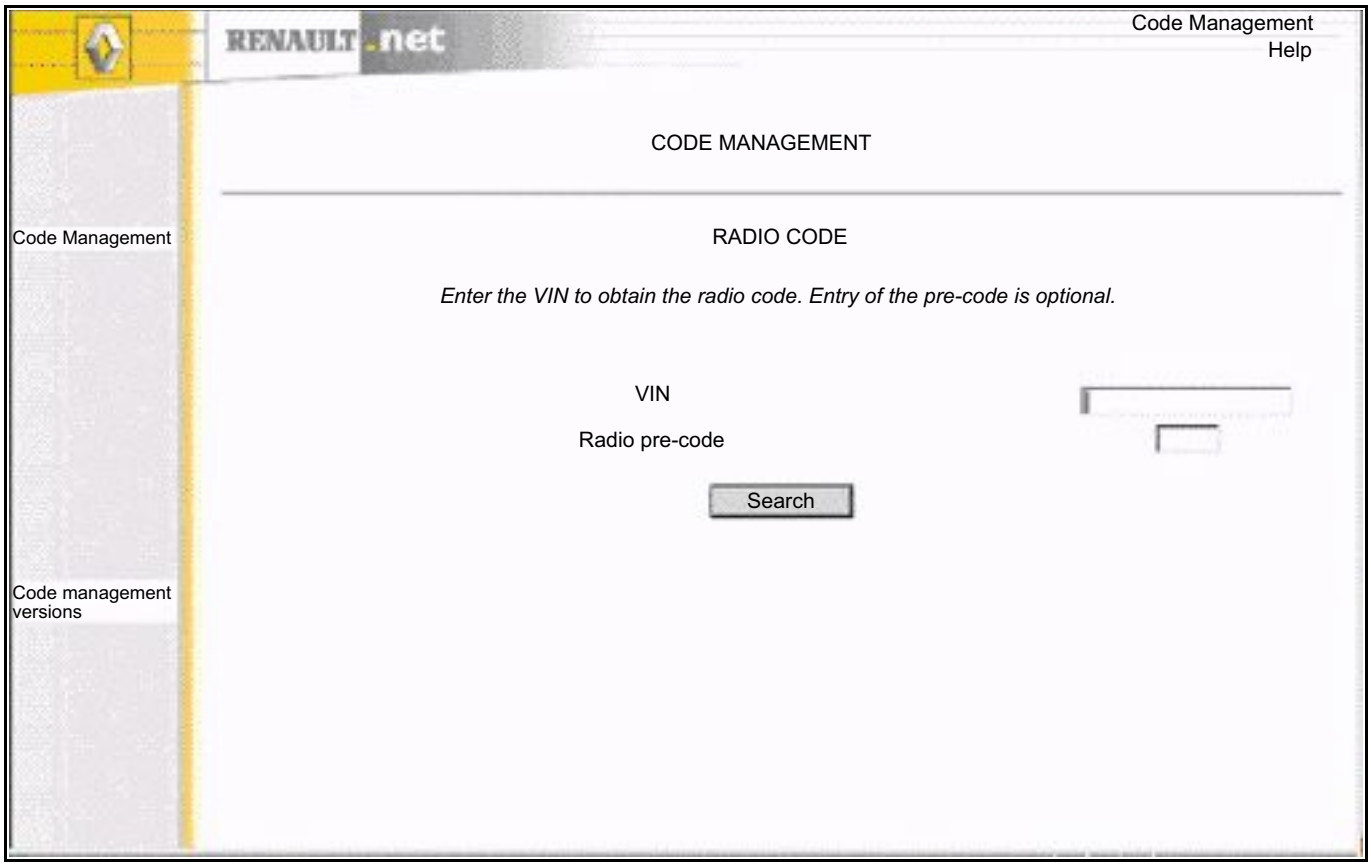

Following an attempt to enter the code in the vehicle radio, if the code supplied is not correct, search for the radio's pre-code:
Depending on the type of radio, recover the pre-code:

- either from the radio display using the self-test procedure
- or by removing the radio; the pre-code is found on the label affixed to the radio.

Note:
The pre-code consists of a letter and three digits (example below N557).

The pre-code is found after the Renault part number (8200 XXX XXX or 7700 XXX XXX) and the letter T
Example above: 8200178157T**N557**

If the code supplied is not correct, perform another search in Code Management
→ re-enter the VIN
→ click the search button
→ the following screen appears:
with three possible options:
1 Display the radio code available in the database
2 Display the radio code obtained using the VIN and the radio pre-code
3 Find the radio code using its part number reference (old server procedure)

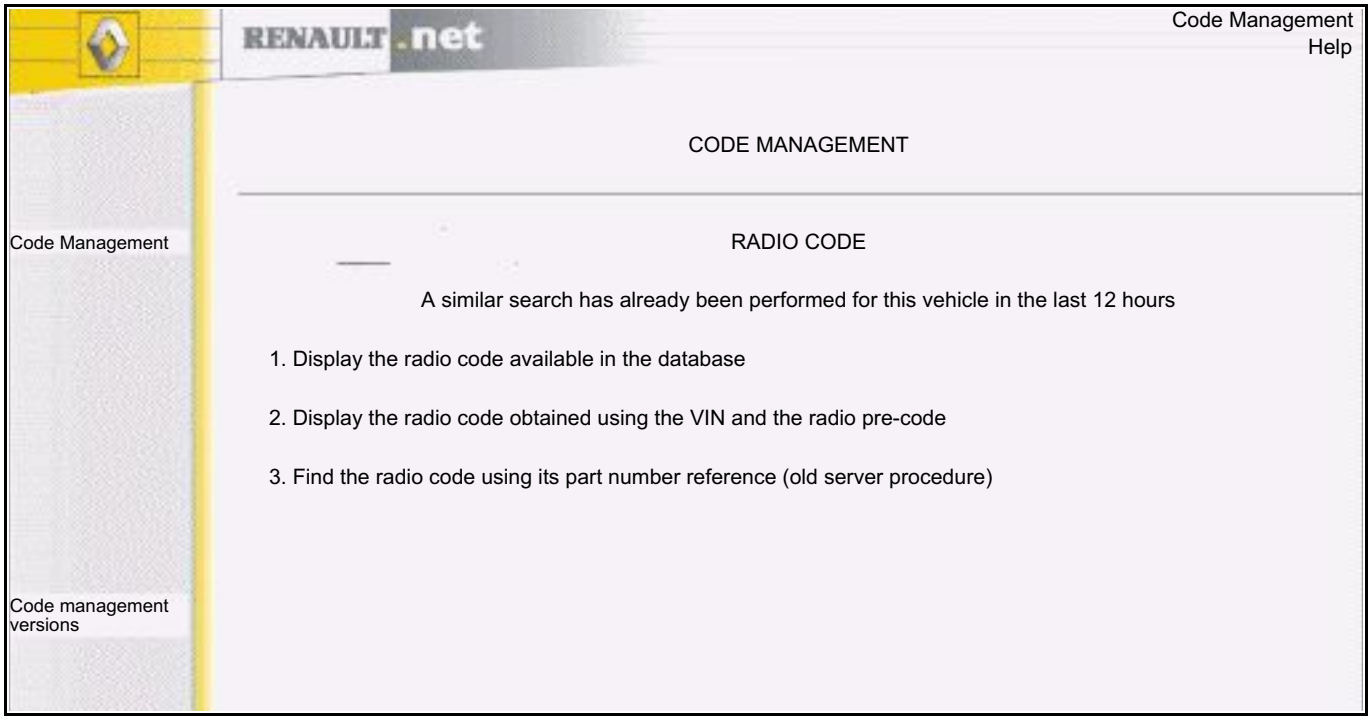

→ select option 2

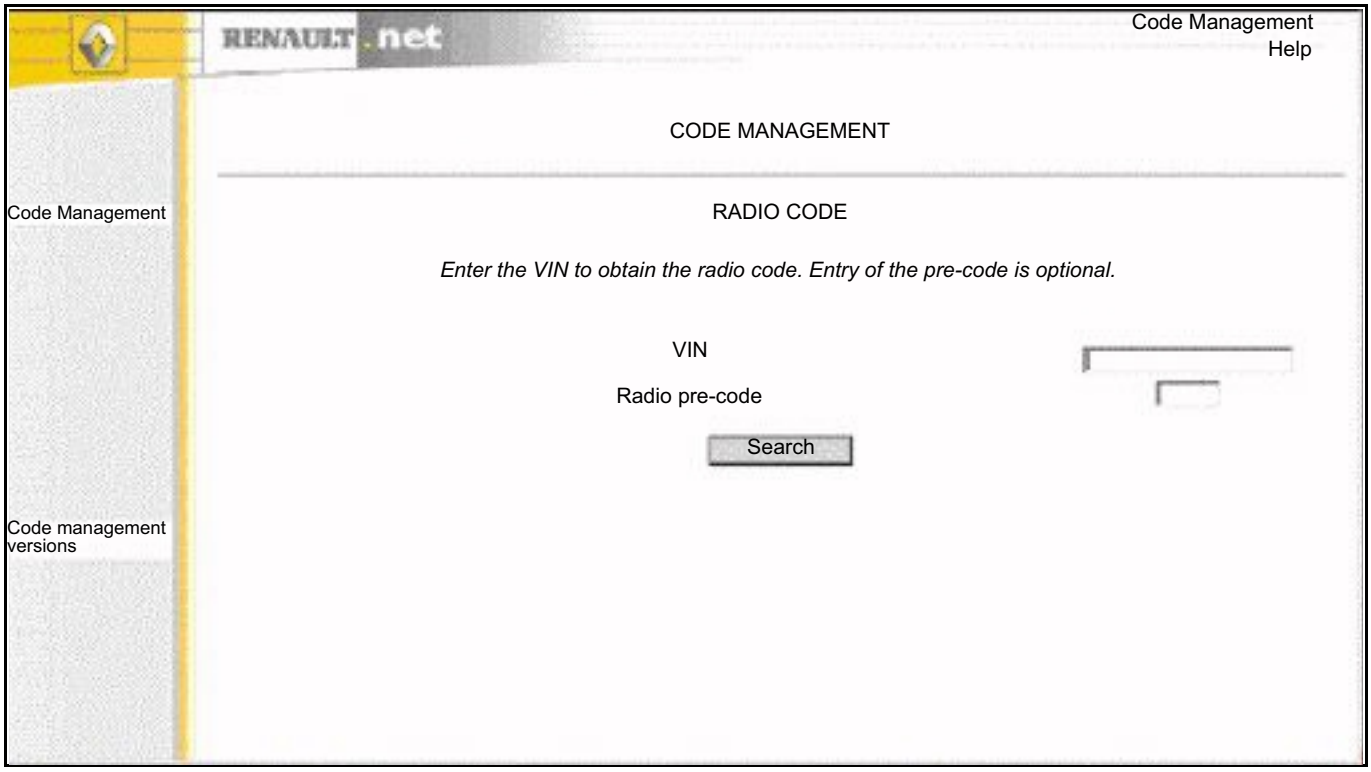

→ re-enter the VIN
→ enter the radio pre-code
→ click the search button
→ new radio code supplied

Old radios without pre-code:

If you wish to find a radio code using the radio part number reference (old Minitel and voice server procedures), select option 3:

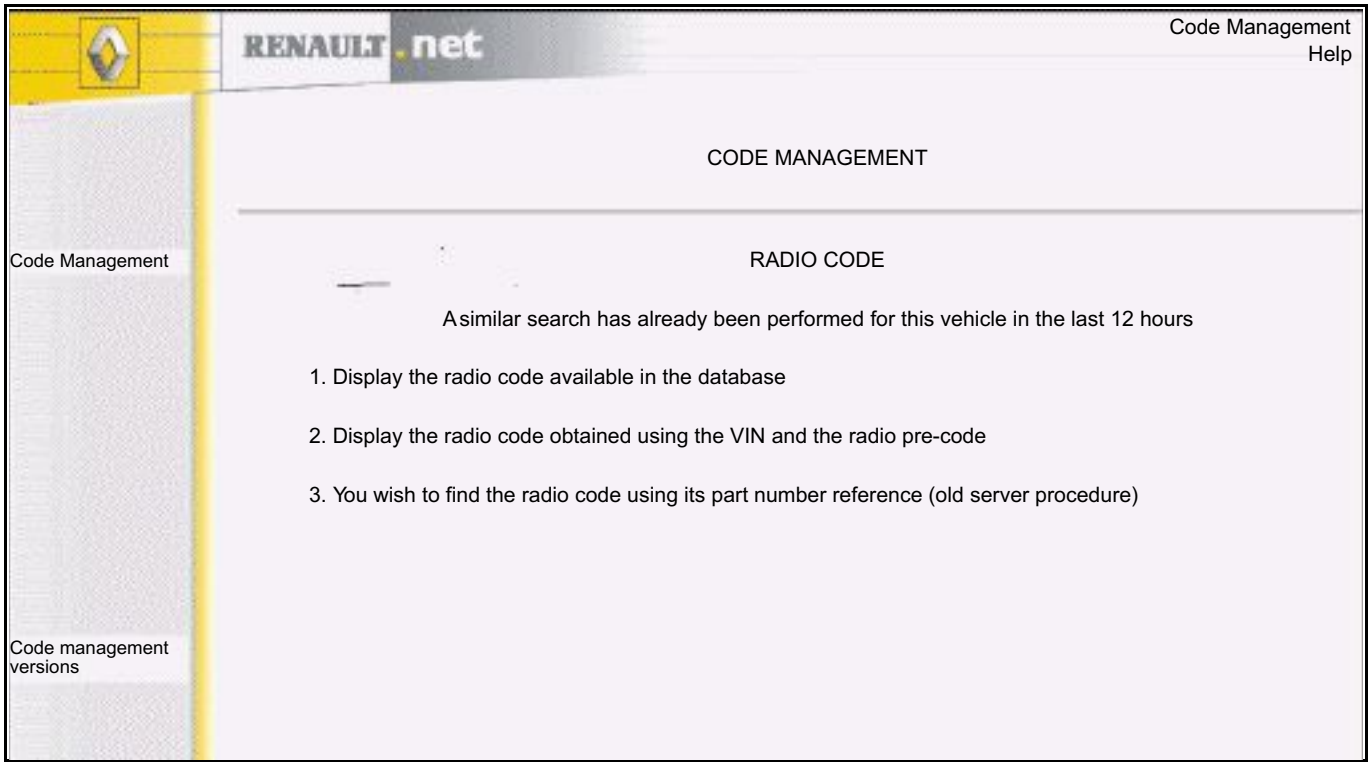

Example:
Radio part number reference:
Philips = RN + 3 digits + 2 letters + 7 digits
Blaupunkt = BP + 4 digits + 1 letter + 7 digits
Pioneer = RN2006 + 1 letter + 7 digits or 1 letter + 7 digits (old models)
Alpine = AL + 9 digits
Becker = B or E + 7 digits

→ re-enter the VIN
→ enter the radio part number reference (e.g.: Philips = RN679FN3757251 or Blaupunkt = BP8128Y2236316 etc.)
→ click the search button
→ radio code supplied

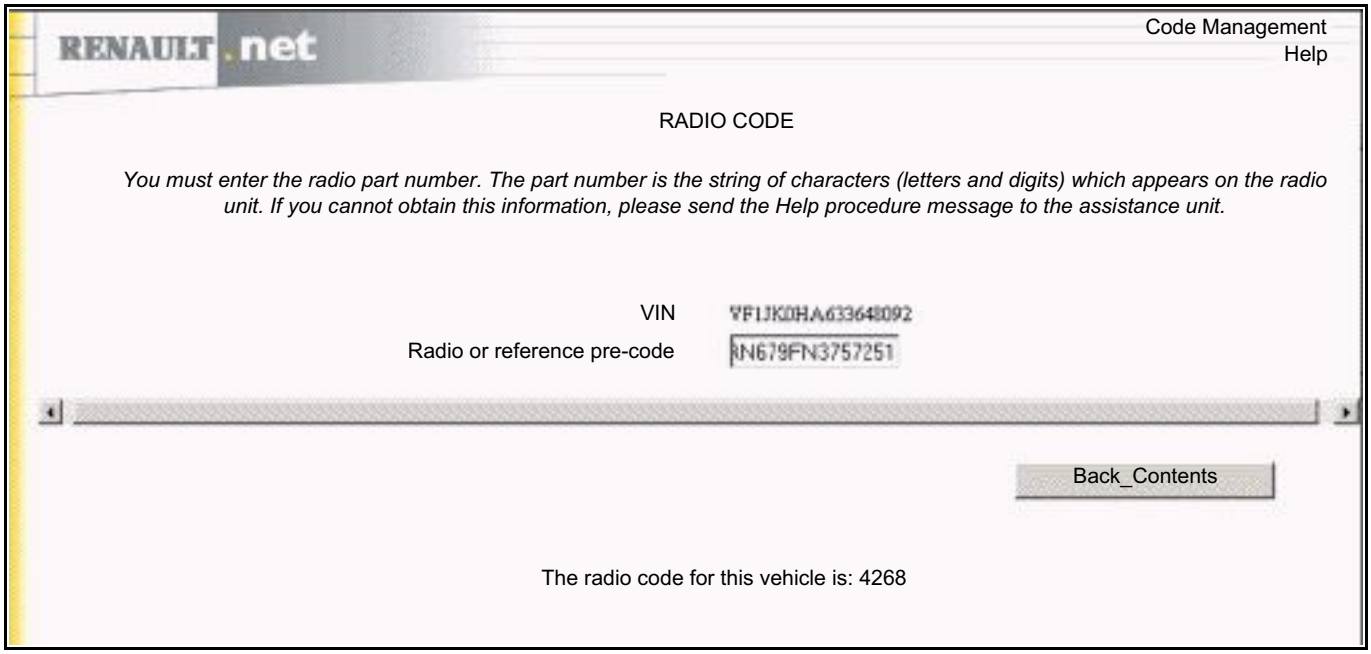

If you cannot obtain the correct code you must send a Help message:

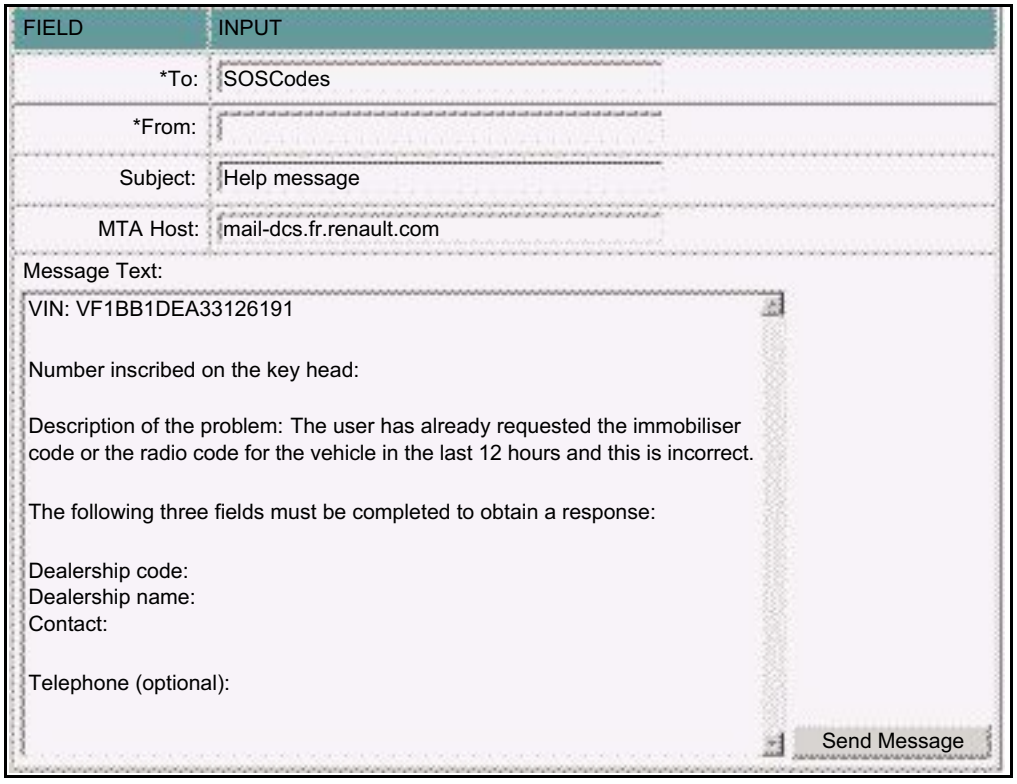

→ Complete the mandatory fields; the other fields are completed automatically.
→ Click the Send message button to send the message to Technical Assistance.

2.3 Video network code

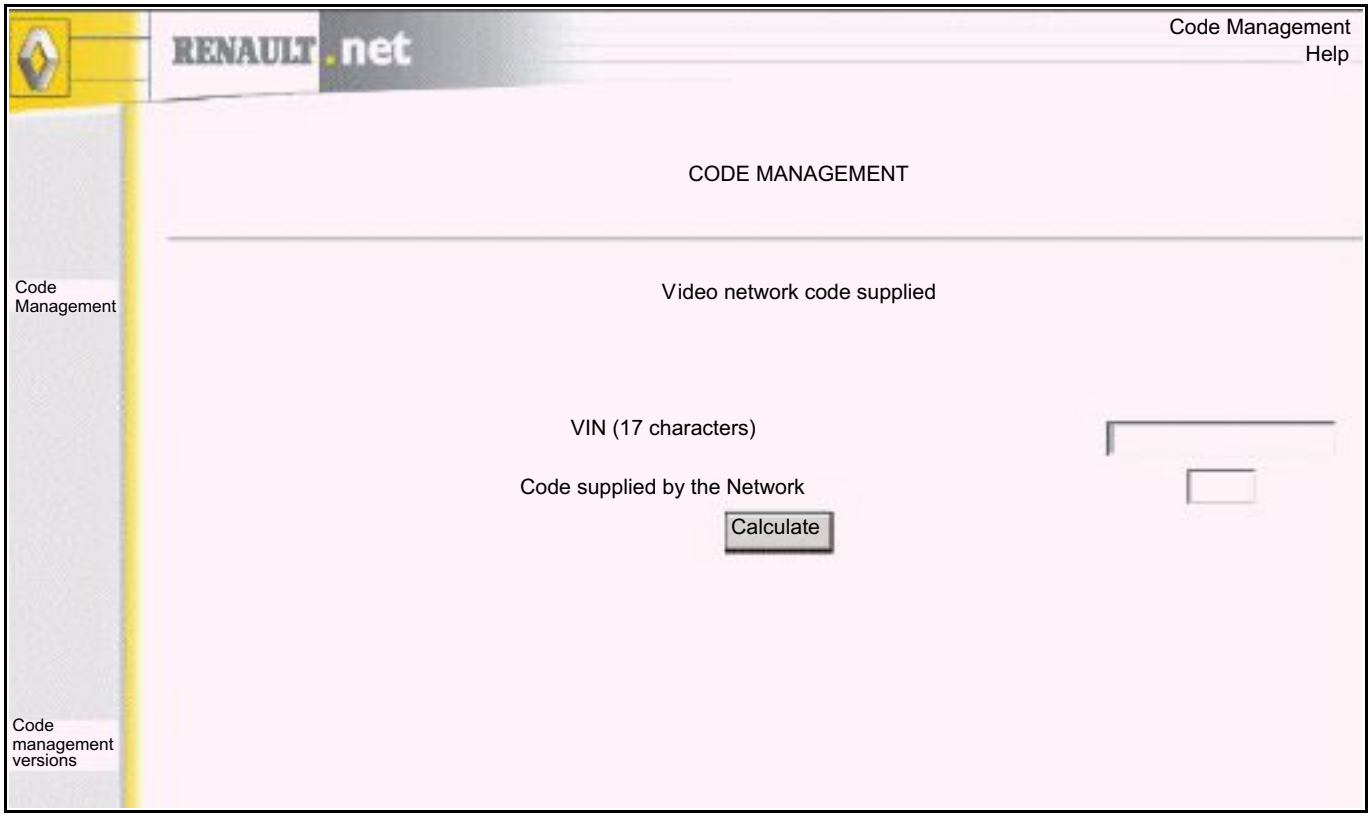

→ enter the VIN
→ enter the 4-digit code generated by the vehicle's video network
→ click on the Calculate button
→ 4-digit code supplied by the code server

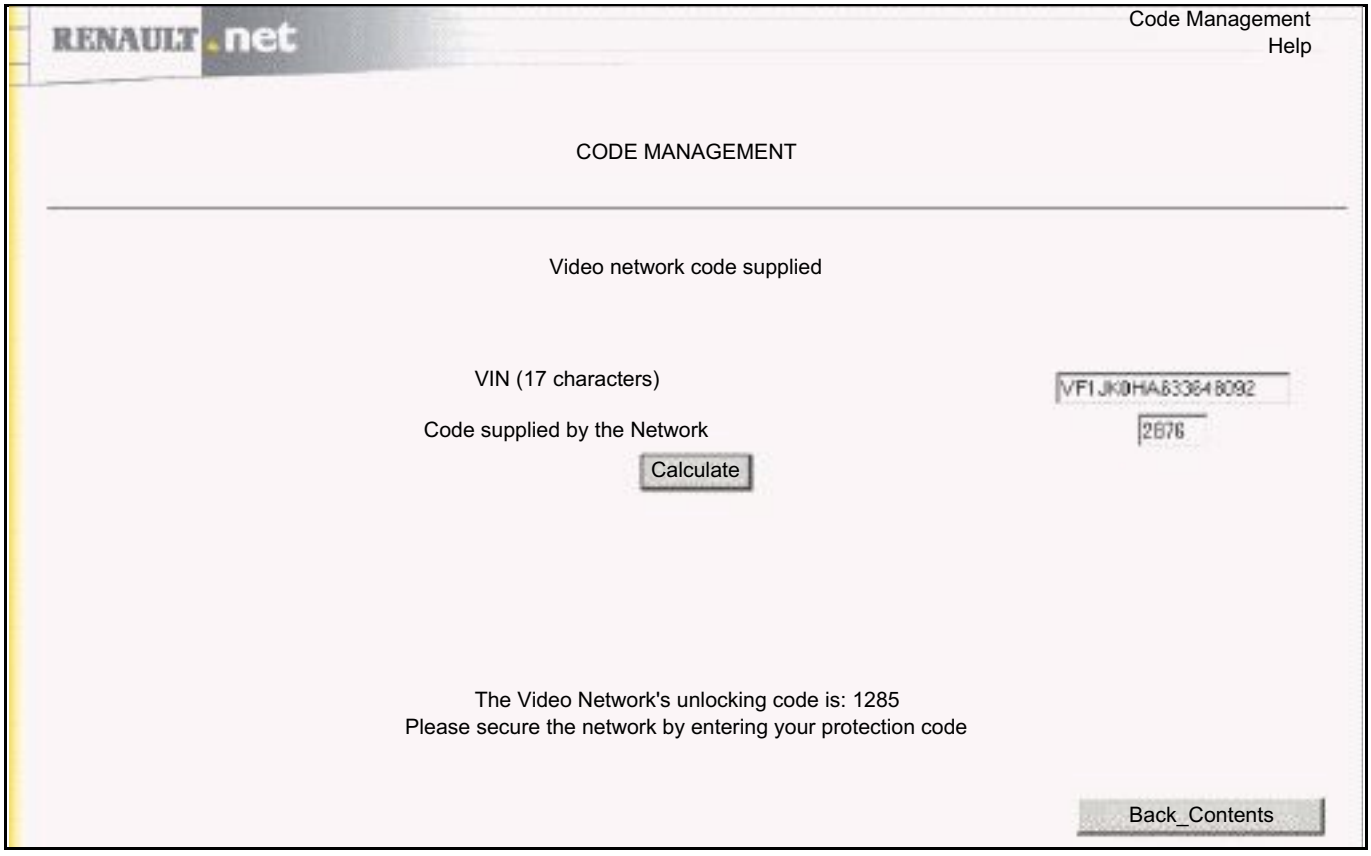
RENAULT .net
Code Management
Help
CODE MANAGEMENT
Video network code supplied
VIN (17 characters)
VF1JK0HA63364 8092
Code supplied by the Network
2676
Calculate
The Video Network's unlocking code is: 1285
Please secure the network by entering your protection code
Back_Contents

2.4 Tool reprogramming key:

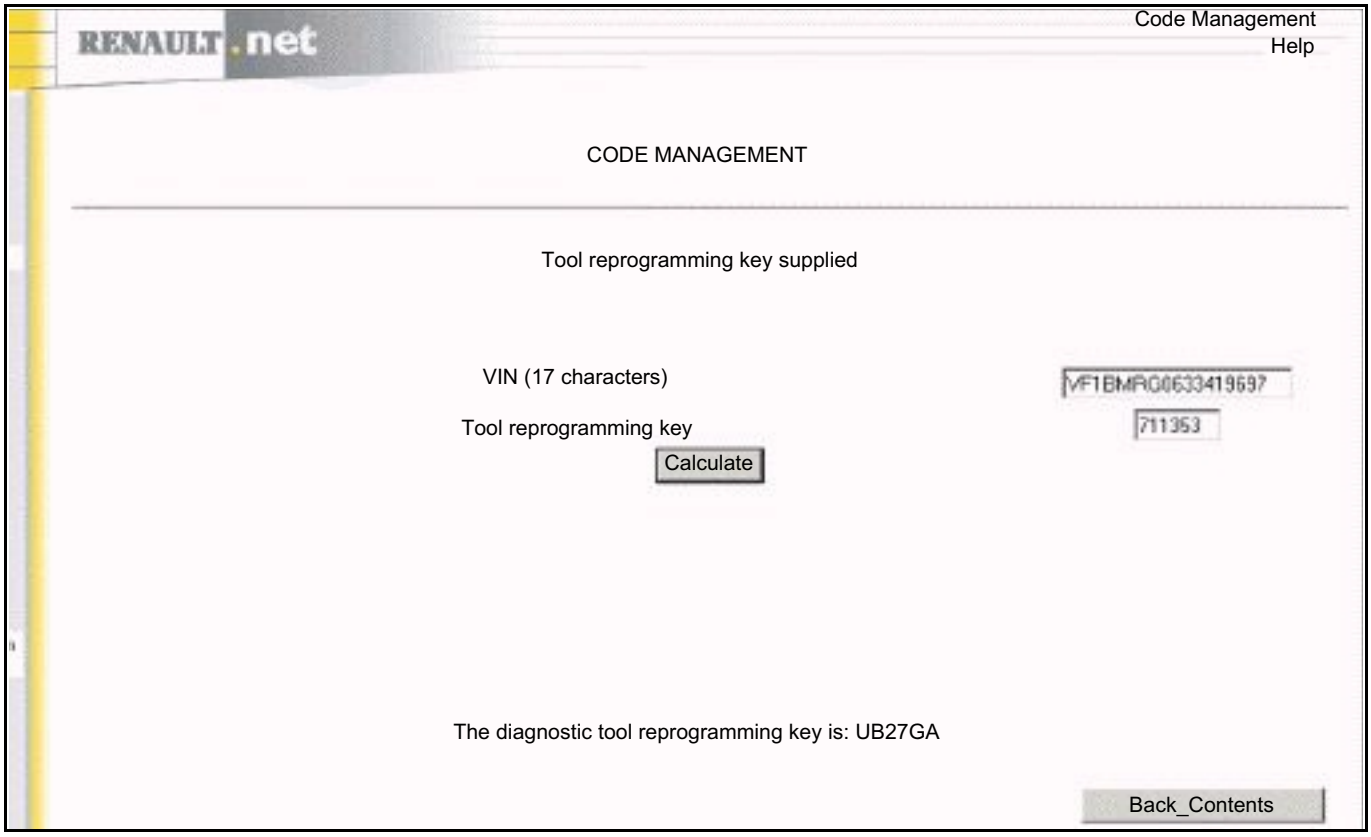

→ enter the VIN
→ enter the 6-digit code generated by the diagnostic tool
→ click on the Calculate button
→ 6-character (letters and digits) reprogramming key supplied for entry in diagnostic tool.

RENAULT

Technical Note 6001A

TTY

Air conditioning

All types

General procedures

Edition 3

77 11 327 562 AUGUST 2004 Edition Anglaise

"The repair methods given by the manufacturer in this document are based on the technical specifications current when it was prepared.

The methods may be modified as a result of changes introduced by the manufacturer in the production of the various component units and accessories from which his vehicles are constructed."

All copyrights reserved by Renault.

The reproduction or translation in part of whole of the present document, as well as the use of the spare parts reference numbering system, are prohibited without the prior written consent of Renault.

© Renault s.a.s. 2005

Air conditioning

Contents

Page

62A AIR CONDITIONING

General information	62A-1
Air conditioning: Precautions for repair	62A-6
Consumables	62A-7
Air conditioning: Function of components	62A-13
Air conditioning: Check	62A-21
Fault finding	62A-22
Coolant circuit check	62A-24
Coolant circuit Draining - Refilling	62A-27
Evaporator: Cleaning	62A-30

Some vehicles now have a climate control system combining the heating system (production of warm air) with the air conditioning system (production of cold air), to cope with the discomfort caused by weather conditions (heat waves, cold snaps, etc.).

The climate control system controls the passenger compartment's internal temperature as well as on the humidity level of the air to increase comfort for the occupants.

In some situations (prolonged parking in direct sunlight), the temperature can become difficult to bear or even present a genuine hazard. To obtain an acceptable comfort level quickly, evacuate the overheated air by leaving the doors open for a few minutes, then start the vehicle and activate the climate control; it can also be used to demist the windows more quickly in cold weather by drying the air.

IMPORTANT

Never exceed a temperature difference between the exterior and interior of more than 20˚C, as this could cause the occupants to catch cold.

Note:

- Keep the windows closed when using the air conditioning to improve efficiency of the latter,
- Use air recirculation to supplement the air conditioning in very hot weather: however, only use air recirculation for a maximum of **10 minutes** since this function, though sometimes limited automatically, isolates the passenger compartment from the exterior by reusing the internal air, which thins the oxygen inhaled and increases the humidity level,
- Use the air conditioning regularly throughout the year to keep it in good condition.

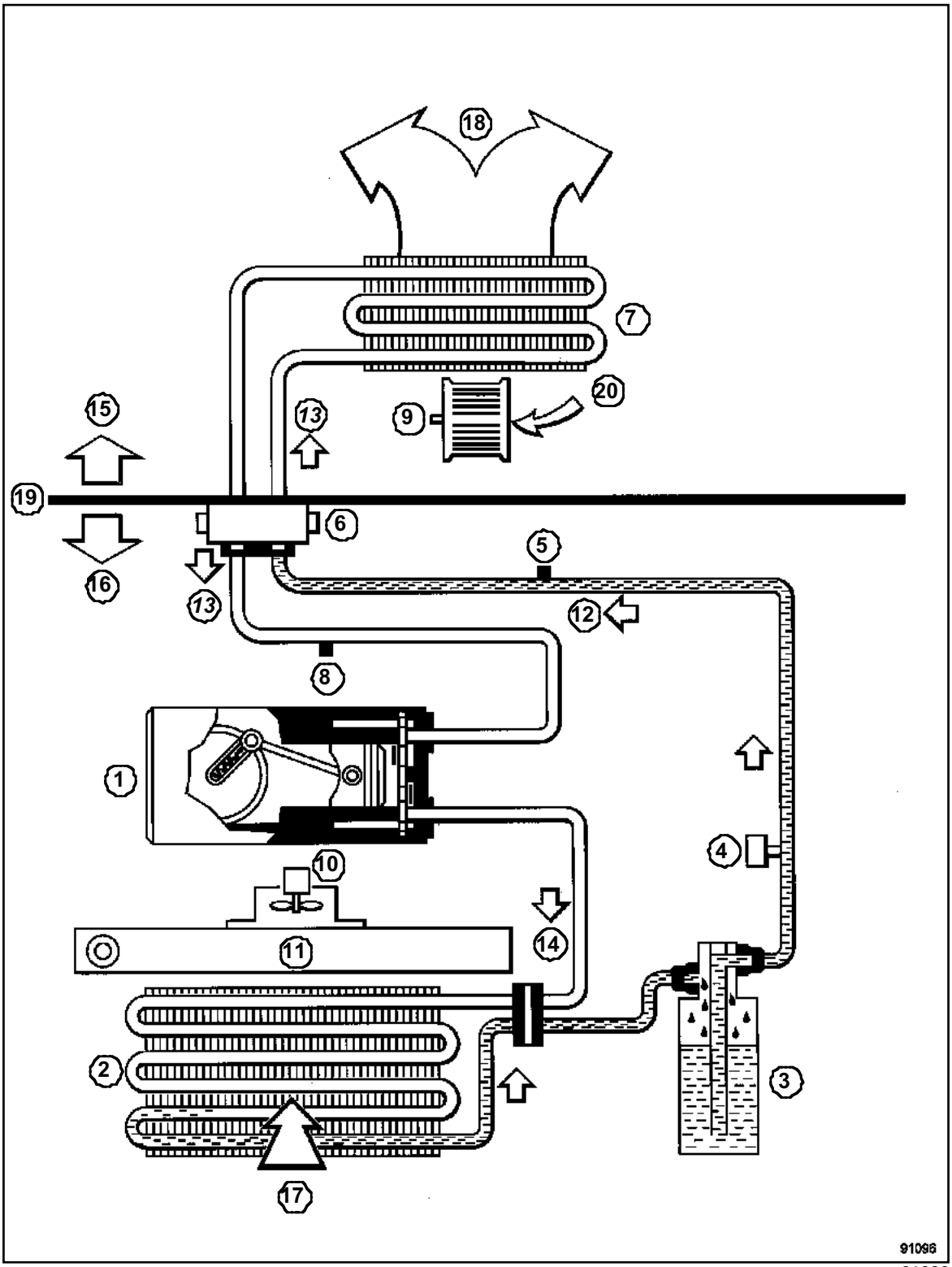

91096

(**1**)	Compressor	(**6**)	Expansion valve
(**2**)	Condenser	(**7**)	Evaporator
(**3**)	Dehydration canister	(**8**)	Low pressure valve
(**4**)	Pressure sensor	(**9**)	Air conditioning blower
(**5**)	High pressure valve	(**10**)	Engine cooling fan
		(**11**)	Cooling radiator

(**12**)	High pressure fluid
(**13**)	Low pressure vapour
(**14**)	High pressure vapour
(**15**)	Passenger compartment
(**16**)	Engine compartment
(**17**)	External air
(**18**)	Towards air mixing unit
(**19**)	Scuttle panel bulkhead
(**20**)	External or recirculated air

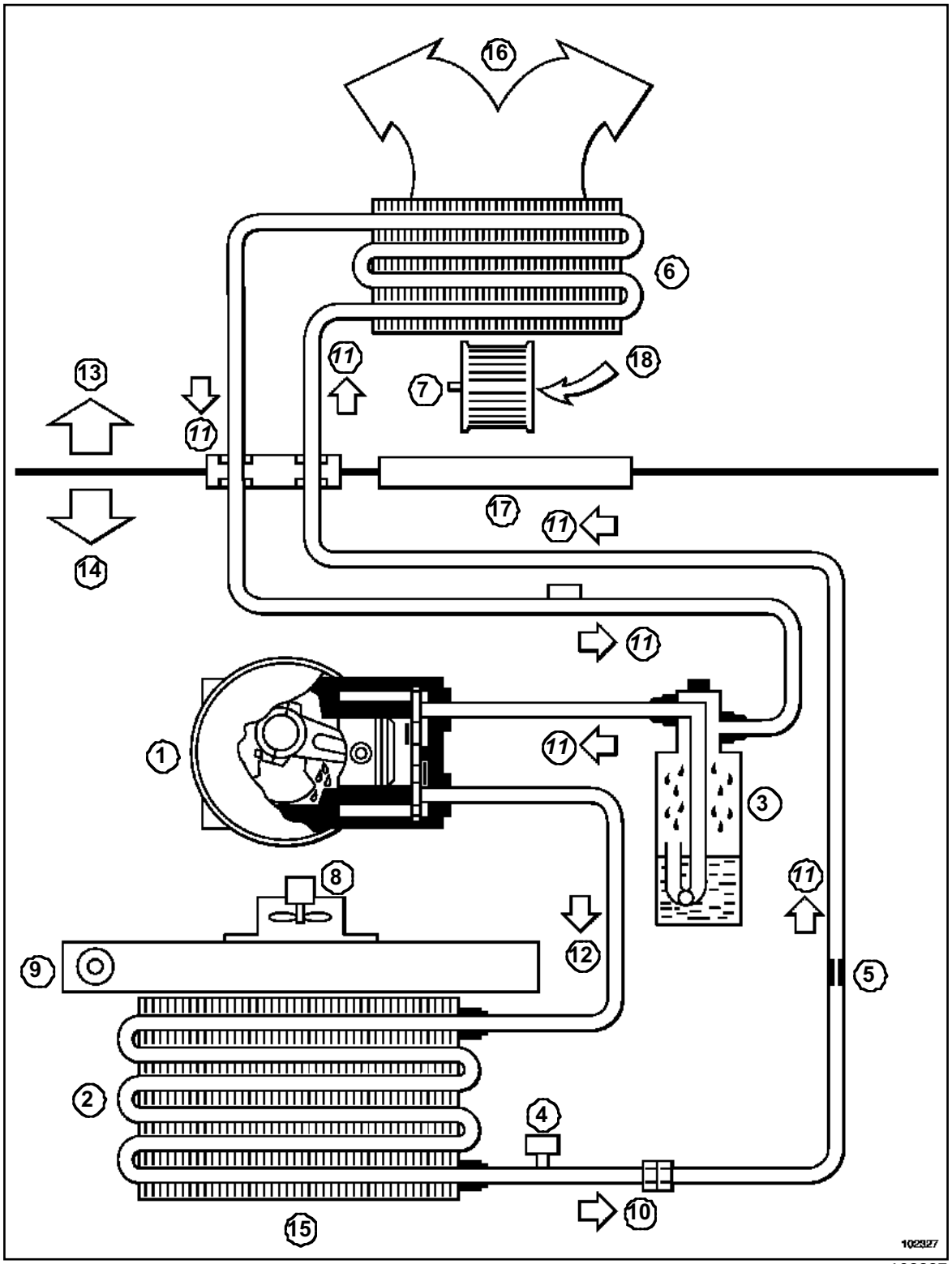

102327

(**1**)	Compressor	(**6**)	Evaporator
(**2**)	Condenser	(**7**)	Air conditioning blower
(**3**)	Dehydration canister	(**8**)	Engine cooling fan
(**4**)	Pressure sensor	(**9**)	Cooling radiator
(**5**)	Calibrated choke	(**10**)	High pressure fluid
		(**11**)	Low pressure vapour

(**12**)	High pressure vapour
(**13**)	Passenger compartment
(**14**)	Engine compartment
(**15**)	External air
(**16**)	To mixing unit
(**17**)	Scuttle panel bulkhead
(**18**)	External or recirculated air

REMINDER

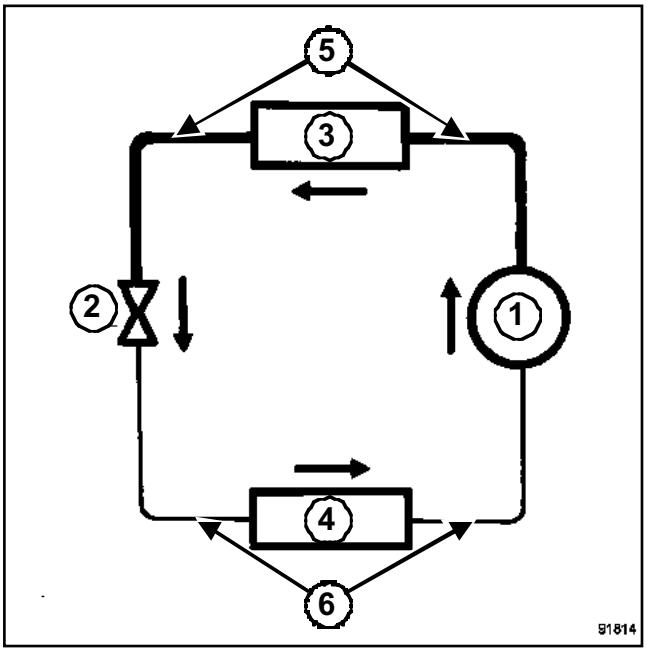

91814

(**1**)	Compressor
(**2**)	Expansion valve
(**3**)	Condenser
(**4**)	Evaporator
(**5**)	High pressure
(**6**)	Low pressure

Assemblies (**1**), (**2**), (**3**), (**4**) and the connecting piping are known as the cold loop.

There are two types of comfort level regulation:

- manual systems,

- automatic systems.

Manual systems are regulated directly by the user, who selects a comfort level and adjusts the settings to obtain this level.

Automatic systems are managed by the air conditioning computer, which analyses various data (internal temperature, external temperature, etc.). In addition to the system, the climate control computer manages air distribution and ventilation to achieve the desired comfort level.

Note:

For more information on the system, refer to all the documentation for the vehicle.

IMPORTANT

The following must be worn when handling refrigerant fluid:

- gloves,
- protective eyewear (with side shields where possible).

- In the event of refrigerant fluid coming into contact with the eyes, rinse thoroughly with plain water for **15 minutes**.
- Keep eyewash available if possible.
- If refrigerant comes into contact with your eyes, consult a doctor immediately. Inform the doctor that the burns were caused by **R134A** refrigerant.
- In the event of contact with other unprotected parts of the body (despite the safety advice being followed), rinse well with clean water continuously for **15 minutes**.

IMPORTANT

- Any work involving refrigerants must be carried out in a well ventilated area.
- The refrigerant must not be stored in a well, a pit, a hermetically sealed room, etc.
- Refrigerants are colourless and odourless fluids.

Refrigerants are denser than air and so they sink to the ground. This results in a risk of asphyxiation. Consequently, when working on the system ensure that there are no pits, wells, ventilation shafts, etc., any nearer than **5 m** away, and run the gas extraction equipment.

At above **100°C**, due to a hot spot for example, refrigerant decomposes and produces a highly irritant gas.

IMPORTANT

It is prohibited to carry out welding or brazing on:

- components of the air conditioning system when these are in place,
- the vehicle, if there is a risk of overheating an air conditioning component.

It is possible to place components in the drying oven after painting or to carry out work near the system if the temperature does not exceed **80°C**.

IMPORTANT

- Repairing any faulty components of the air conditioning system is strictly prohibited.
- Any faulty component must be replaced.

Pipes must be correctly routed.

Ensure that the refrigerant piping is correctly attached to prevent contact with metal parts in the engine compartment.

TWINGO

Engine (specification)	Compressor	Type of oil	Total volume of oil in the circuit (ml or cm^3)	Refrigerant capacity (g)
C3G	SANDEN SD7H15	PAG SP 10	**135 ± 10**	**650 ± 35**
D7F	SD7V16	PAG SP 10		**740 ± 35**
D7F/D4F	SD6V12			**700 ± 35**

CLIO II

Engine (specification)	Compressor	Type of oil	Total volume of oil in the circuit (ml or cm^3)	Refrigerant capacity (g)
All engines	SD6V12	PAG SP 10	**135 ± 10**	**660 ± 35**
K4M/K4J (Mexico)	SD7V16			**830 ± 35**
K4M/K4J (manufactured in Turkey with automatic transmission)	SD7V16			**740 ± 35**

CLIO III

Engine (specification)	Compressor	Type of oil	Total volume of oil in the circuit (ml or cm^3)	Refrigerant capacity (g)
D4F	Sanden SD6V12	PAG SP 10	**135 ± 10**	**530 ± 35**
K4M				
K4J				
K9K				

MODUS

Engine (specification)	Compressor	Type of oil	Total volume of oil in the circuit (ml or cm^3)	Refrigerant capacity (g)
D4F	Sanden SD6V16	PAG SP 10	**135 ± 10**	**530 ± 35**
K4M				
K4J				
K9K				

LOGAN

Engine (specification)	Compressor	Type of oil	Total volume of oil in the circuit (ml or cm^3)	Refrigerant capacity (g)
K7M	Sanden SD7V16 or SD7V12	PAG SP 10	**135 ± 10**	**840 ± 35**
K7J				
K9	SANDEN SD7V16	PAG SP 10	**135 ± 10**	**840 ± 35**

MEGANE

Engine (specification)	Compressor	Type of oil	Total volume of oil in the circuit (ml or cm^3)	Refrigerant capacity (g)
E7J/K7M	DELPHI V5	PLANETELF PAG 488	**220 ± 15**	**750 ± 35**
K7M MERCO	SD6V12	PAG SP 10	**135 ± 10**	**750 ± 35**
K4J/K4M	DELPHI 6CVC135	PLANETELF PAG 488 and 897	**150 ± 10**	**700 ± 35**
F3R MERCO	SANDEM SD7V16	PAG SP 10	**135 ± 10**	**780 ± 35**
F4P/F4R/F5R	DELPHI V5	PLANETELF PAG 488	**220 ± 15**	**750 ± 35**
F8Q/F9Q	DELPHI V5	PLANETELF PAG 488	**220 ± 15**	**750 ± 35**

SCENIC

Engine (specification)	Compressor	Type of oil	Total volume of oil in the circuit (ml or cm^3)	Refrigerant capacity (g)
K4M/K4J (left-hand drive)	DELPHI V5	PLANETELF PAG488	**220 ± 15**	**680 ± 35**
K4M/K4J (right-hand drive)				**780 ± 35**
F4 (left-hand drive)				**680 ± 35**
F4 (right-hand drive)				**780 ± 35**
F4 (Mexico)				**750 ± 35**
F9Q (left-hand drive)				**680 ± 35**
F9Q (right-hand drive)				**780 ± 35**

MEGANE II

Engine (specification)	Compressor	Type of oil	Total volume of oil in the circuit (ml or cm^3)	Refrigerant capacity (g)
K4J/K4M/F4/F5/K9K/F9Q	DELPHI 6CVC135	PLANETELF PAG 488	**150 ± 10**	**550 ± 35**
M9R	DELPHI 5CVC126	PLANETELF PAG 488	**150 ± 10**	**650 ± 35**

SCENIC II

Engine (specification)	Compressor	Type of oil	Total volume of oil in the circuit (ml or cm^3)	Refrigerant capacity (g)
K4J/K4M/F4/F5/K9K/F9Q	DELPHI 6CVC135	PLANETELF PAG 488	**150 ± 10**	**550 ± 35**
M9R	DELPHI 5CVC126	PLANETELF PAG 488	**150 ± 10**	**650 ± 35**

LAGUNA

Engine (specification)	Compressor	Type of oil	Total volume of oil in the circuit (ml or cm^3)	Refrigerant capacity (g)
K4M/N7Q/F4P/F3R/F3P/ F9Q/G8T (turbocharger)/ F4R	SANDEN SD7H15	PAG SP 10	**135 ± 15**	**700 ± 35**
F3P (LPG)/Z7X/L7X/G8T (Normally aspirated)				**780 ± 35**

LAGUNA II

Engine (specification)	Compressor	Type of oil	Total volume of oil in the circuit (ml or cm^3)	Refrigerant capacity (g)
K4/F4P/F4R/F5R/F9Q/ G9T	DELPHI V5	PLANETELF PAG488	**265 ± 15**	**650 ± 35**
L7X	SANDEN SD7V16	PAG SP 10	**135 †15**	
M9R	ZEXEL-VALEO	ZXL100PG	**210 ± 10**	

VELSATIS

Engine (specification)	Compressor	Type of oil	Total volume of oil in the circuit (ml or cm^3)	Refrigerant capacity (g)
G9T/F4RT	DELPHI V5	PLANETELF PAG488	**220 ± 15**	**650 ± 35**
V4Y	CALSONIC V6	PAG SP 10	**220 ± 15**	
P9X	DENSO 7SBU16	ND-OIL8	**245 ± 15**	

ESPACE IV

Engine (specification)	Compressor	Type of oil	Total volume of oil in the circuit (ml or cm^3)	Refrigerant capacity (g)
F4/G9T/F9Q	DELPHI 7CVCE	PLANETELF PAG 488	**200 ± 10**	**1000 ± 35**
V4Y	CALSONIC V6	PLANETELF PAG 488	**220 ± 15**	
P9X	DENSO 7SBU16	ND-OIL8	**245 ± 15**	
M9R	ZEXEL KC88	ZXL 100 PG	**210 ± 10**	

ESPACE III

Engine (specification)	Compressor	Type of oil	Total volume of oil in the circuit (ml or cm^3)	Refrigerant capacity (g)
F3R/Z7X/G9T	SANDEN SD7H15	PAG SP 10	**135 ± 15**	**820 ± 30**
L7X				**890 ± 30**
F4R				**750 ± 30**
G8T				**700 ± 35**
F9Q				**720 ± 35**

AVANTIME

Engine (specification)	Compressor	Type of oil	Total volume of oil in the circuit (ml or cm^3)	Refrigerant capacity (g)
L7X	SANDEN SD7V16	PAG SP 10	**135 ± 15**	**800 ± 35**
F4R/G9T	DELPHI V5	PLANETELF PAG 488	**220 ± 15**	

SAFRANE

Engine (specification)	Compressor	Type of oil	Total volume of oil in the circuit (ml or cm^3)	Refrigerant capacity (g)
All engines	SANDEN SD7H15	PAG SP 10	**135 ± 15**	**810 ± 35**

KANGOO

Engine (specification)	Compressor	Type of oil	Total volume of oil in the circuit (ml or cm^3)	Refrigerant capacity (g)
All engines	SD6V12	PAG SP 10	**135 ± 10**	**660 ± 35**
K4M/K4J (Mexico)	SD7V16			**830 ± 35**
K4M/K4J (manufactured in Turkey with automatic transmission)	SD7V16			**740 ± 35**

TRAFIC

Engine (specification)	Compressor	Type of oil	Total volume of oil in the circuit (ml or cm^3)	Refrigerant capacity (g)
All engines (van)	DELPHI V5	PLANETELF PAG 488	**220 ± 15**	**750 ± 35**
All engines (with additional air conditioning)				**1050 ± 35**

MASTER

Engine (specification)	Compressor	Type of oil	Total volume of oil in the circuit (ml or cm^3)	Refrigerant capacity (g)
S8U/S9W (van)	SANDEN SD6V12	PAG SP 10	**135 ± 15**	**850 ± 35**
S8U/S9W (9-seater MPV)				**1400 ± 35**
S8U/S9W (16-seater MPV)				**1200 ± 35**
F9Q/G9T/G9U (van)	DELPHI V5	PLANETELF PAG 488	**220 ± 15**	**850 ± 35**
F9Q/G9T/G9U (9-seater MPV)				**1400 ± 35**
F9Q/G9T/G9U (16-seater MPV)				**1200 ± 35**

Table of volumes of oil to add when replacing components:

Operation on the air conditioning circuit	**Volume of oil (ml or cm^3)**
Circuit oil change	Measure the volume recovered and add the same volume of new oil
Split hose or other rapid leak	**100**
Replacement of a condenser	Volume recovered +**30**
Replacement of an evaporator	Volume recovered +**30**
Replacement of the dehydration canister	Volume recovered + **15**
Replacing a hose	Volume recovered + **10**
Removing/refitting the compressor	Quantity recovered
Replacing a compressor	None added
replacing a compressor in standard exchange	top up as necessary
Replacing a compressor and one or several climate control circuit component(s).	None added
Replacing a compressor in standard exchange and one or several air conditioning circuit component(s)	top up as necessary

I - COMPRESSOR

The compressor places the gas from the evaporator under high pressure. To do this, it is driven in rotation by the engine using a belt and an electromagnetic clutch.

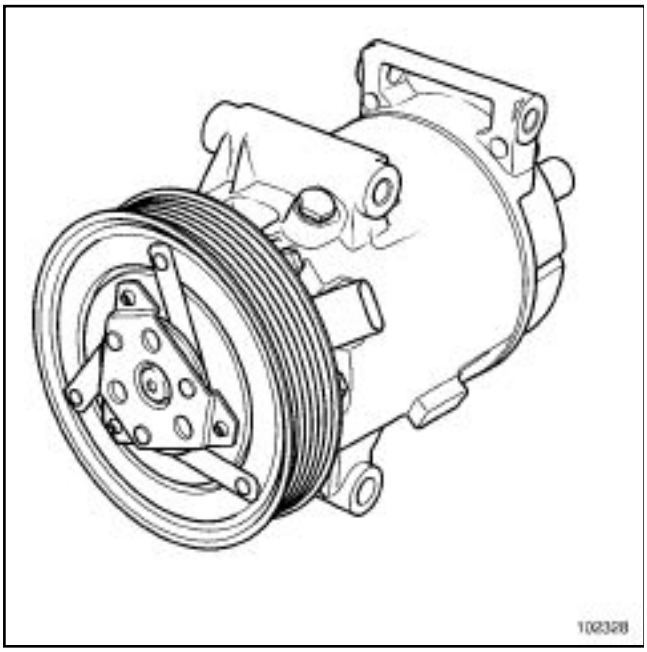

102328

There are two types of compressor in the RENAULT range:

- fixed capacity compressors,
- variable capacity compressors.

Fixed capacity compressors have an oscillating plate driven by a shaft: this is used to intake the refrigerant at low pressure and discharge it at high pressure by actuating the pistons cycle.

Variable capacity compressors operate on the same principle, except that the oscillating plate can also vary the stroke of the pistons according to two types of device:

- pneumatic: the gradient value depends on the low pressure,
- electronic: the gradient is controlled by a signal from the evaporator sensor and the high pressure.

IMPORTANT

Since the compressor is a rotating unit, it must be run with oil of the correct grade and volume (see **Air conditioning, Consumables**).

When the compressor is replaced, it is supplied with the correct level of oil, except in standard exchanges. Top up the oil for compressors in standard exchanges.

Whenever a job requires the compressor to be removed, always replace all belts removed and tighten them to the specified tension if there are no automatic tensioners.

II - CONDENSER

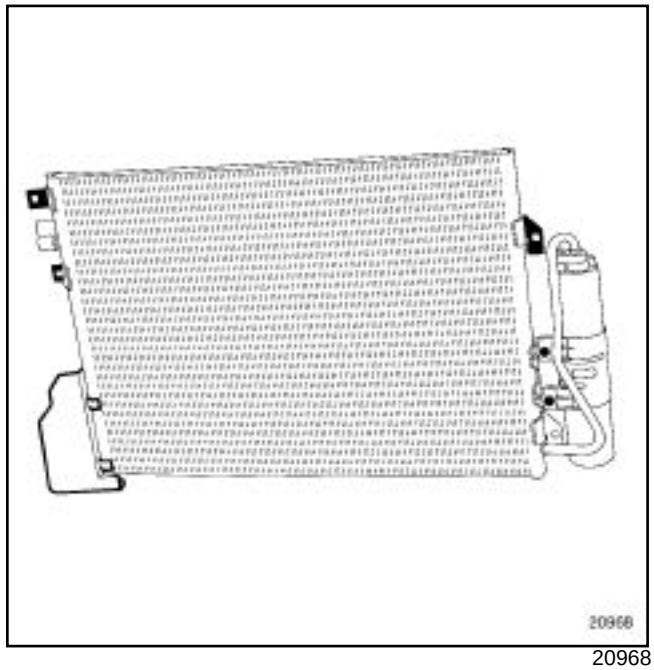

20968

The condenser is installed after the compressor in the circuit; it is located in front of the engine radiator and is intended to dissipate the heat accumulated during compression of the gas. Once cooled, the gas becomes liquid and remains under high pressure.

WARNING

Take care not to damage the condenser and radiator fins while handling them.

Check that the condenser is well-maintained and that the seals on the piping are in good condition.

III - EVAPORATOR

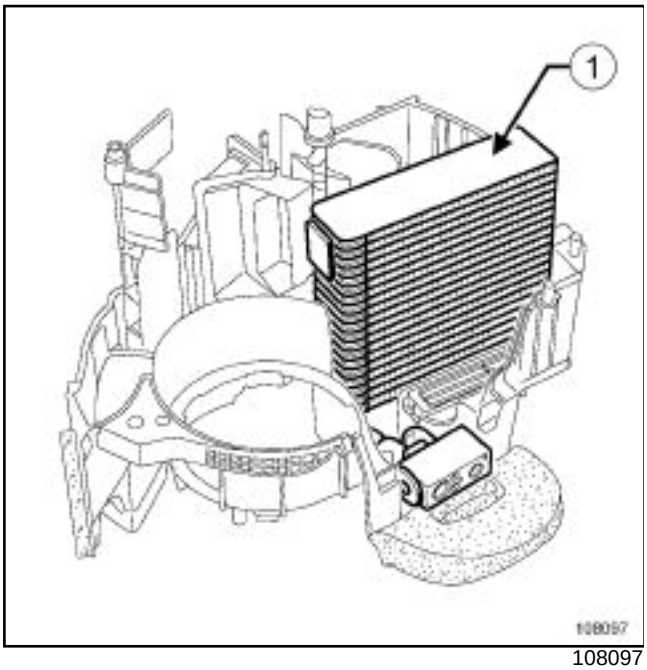

108097

Evaporator (**1**) cools and dries the passenger compartment inlet air.

The refrigerant absorbs heat, the humidity in the air is condensed and evacuated outside via a drain pipe (water under vehicle when stationary).

IV - DEHYDRATION CANISTER

The dehydration canister acts as a reservoir, filter and humidity absorber.

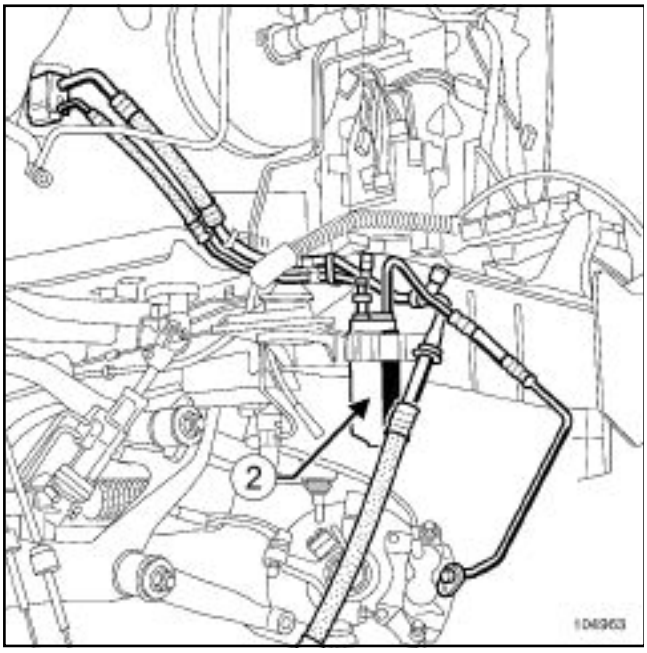

104963

Dehydration canister (**2**) or the "reservoir" is located between the condenser and the expansion valve. In this type of set-up, the refrigerant fluid circulates in the dehydration canister in liquid form.

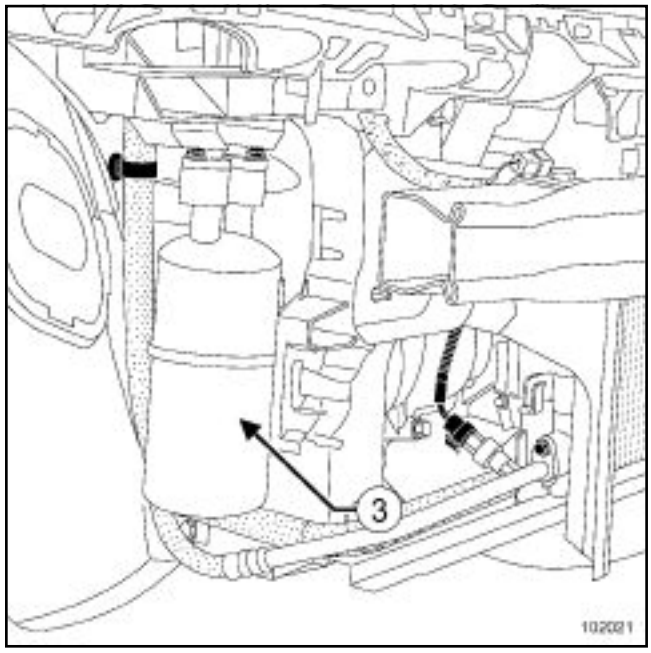

102021

Dehydration canister (**3**) or the "accumulator" is placed at the evaporator outlet to protect the compressor from any liquid coming in at the intake point.

Whatever the type of dehydration canister, reservoir or accumulator, it must always be replaced if the circuit has been opened to the air and the circuit has not been plugged as indicated.

The dehydration canister cannot be repaired.

V - EXPANSION VALVE

The expansion valve is used to convert the fluid from a high pressure liquid state to a low pressure liquid + gas state.

Even though there are two types of expansion valve, the system operation is the same.

WARNING
The expansion valve cannot be repaired.

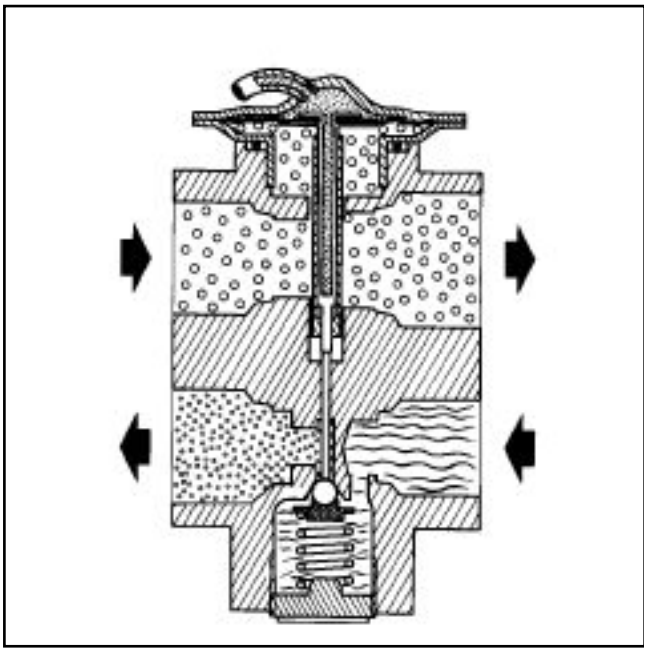

91819

The thermostatic expansion valves are located beyond the dehydration canister.

This type of expansion valve operates according to the temperature of the fluid at the evaporator outlet and proceeds in a cycle as follows:

- if the temperature is high, the refrigerant contained in the tube and the capsule expands and increases the fluid inlet, causing a greater pressure reduction and thereby a drop in temperature;
- if the temperature drops, the volume of the tube and capsule contents decreases and the needle closes the fluid inlet valve.

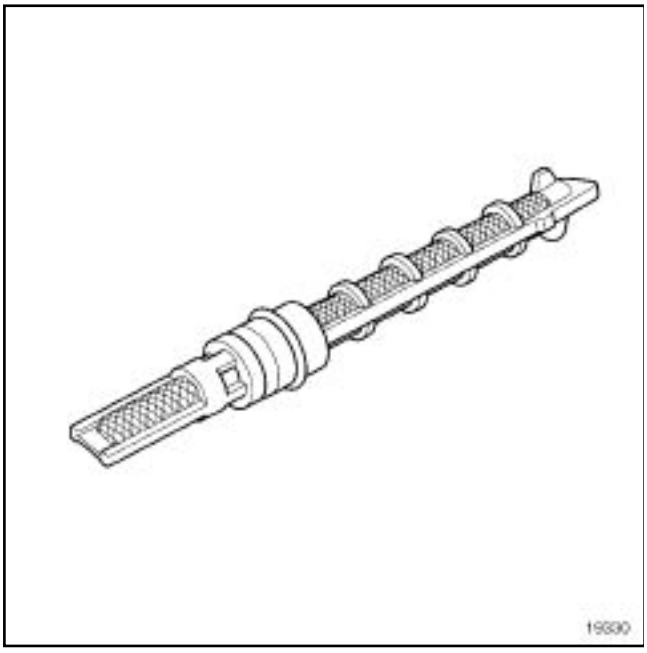

19330

The expansion valves with calibrated openings are positioned at the condenser outlet.

These expansion valves are built into the pipe: the pressure reduction is achieved through a restriction in the tube.

Since the fluid travels through the expansion valves in one direction only, unlike the thermostatic expansion valves, there is less room taken up in the engine compartment.

VI - PIPING

The piping assembly is composed of pipes (flexible rubber piping which is reinforced to make it more watertight) and tubes (rigid aluminium piping).

This piping allows the fluid to circulate in various forms around the circuit.

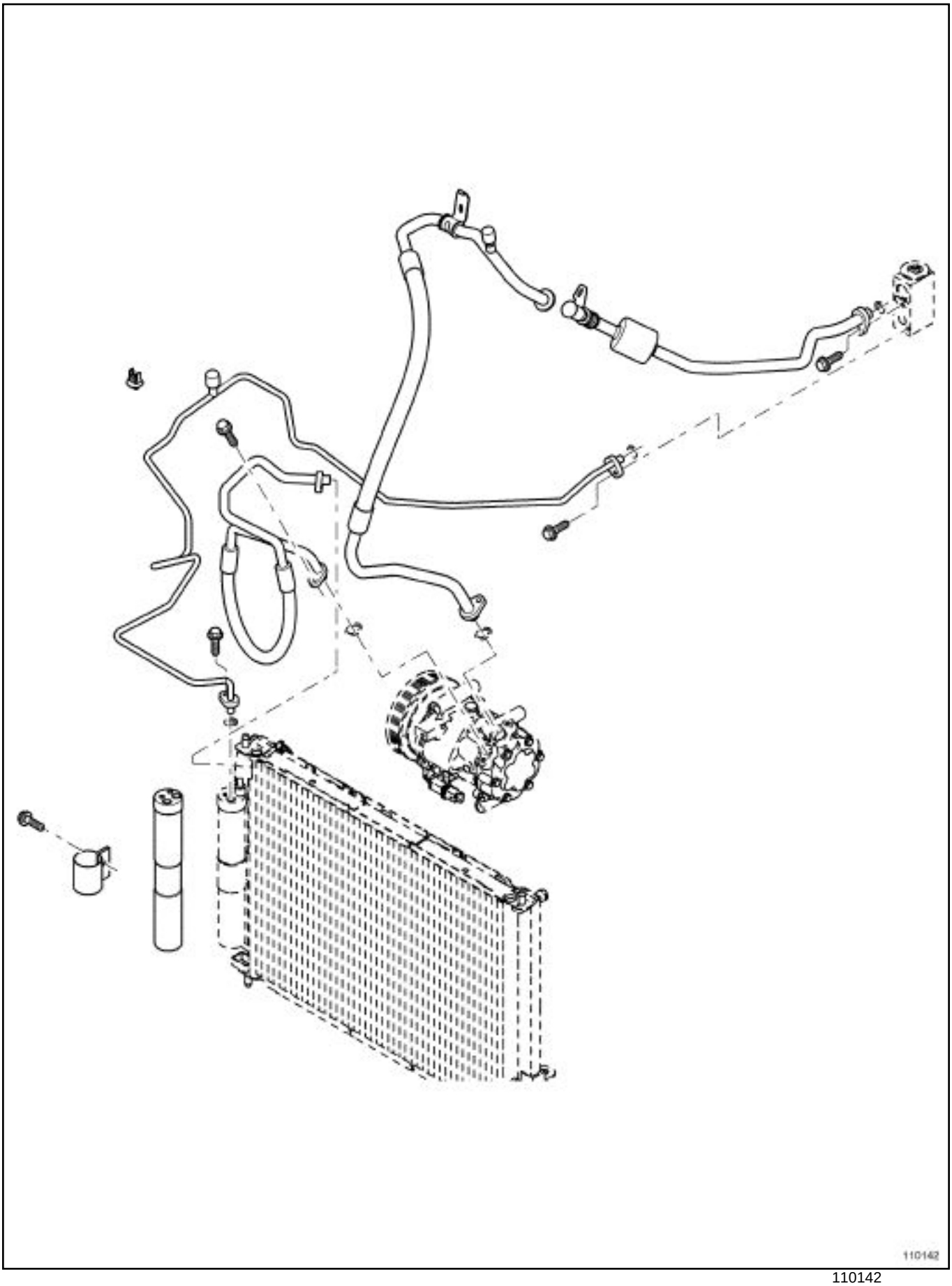

110142

VII - SEALS

These isolate the air conditioning circuit from the outside. They are O-ring or Euro Manuli seals and are found on each circuit connection.

WARNING

To avoid any leaks, check that the pipe surface is sound before positioning the new seal. The surface must be clean and scratch free.

VIII - FILLER VALVE

A filler valve is used to fill the circuit with refrigerant or drain it.

Most systems have two (one for high pressure, one for low pressure), but on vehicles equipped with orifice-type expansion valves there is only one valve.

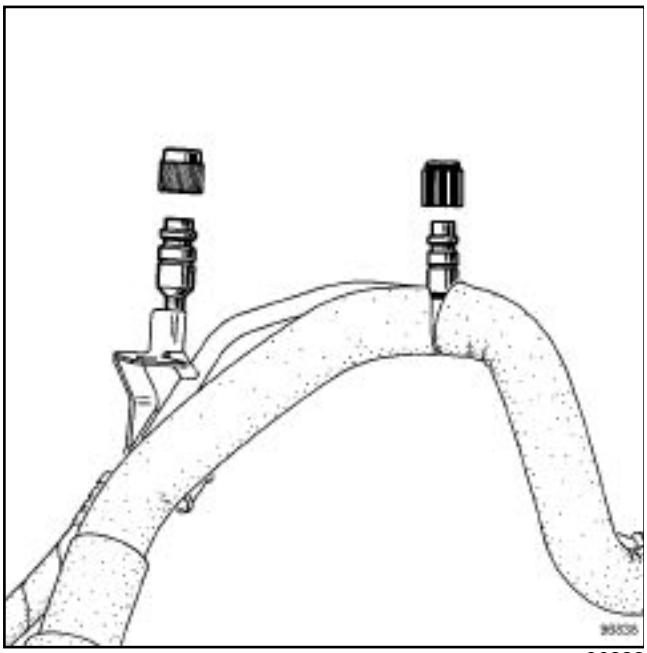

96838

On circuits equipped with two valves, the valves have different diameters to avoid any interchange.

Large diameter valve for the high pressure circuit.

Small diameter valve for the low pressure circuit.

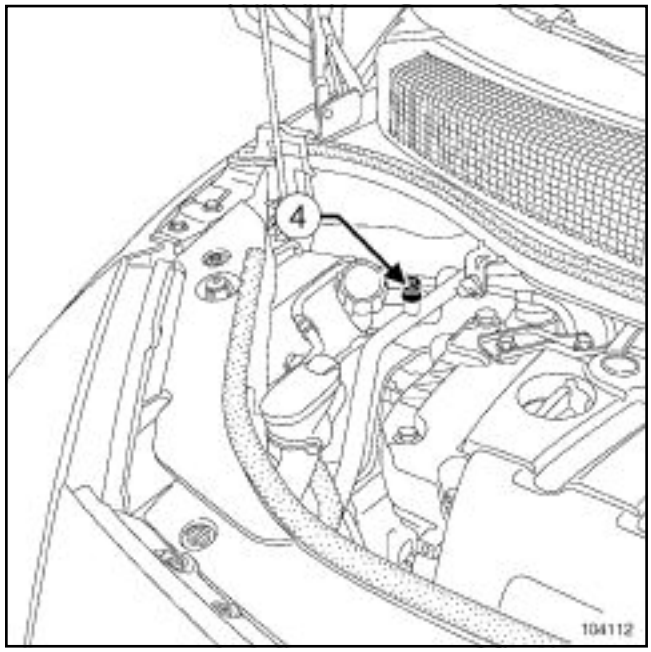

104112

For vehicles that only use one valve (**4**), this will be a large diameter valve, which is placed on the low pressure circuit

WARNING

Comply with the recommended valve tightening torques:

- Small diameter: **8 Nm**
- Large diameter: **10 Nm**.

IX - TRI-FUNCTION PRESSOSTAT

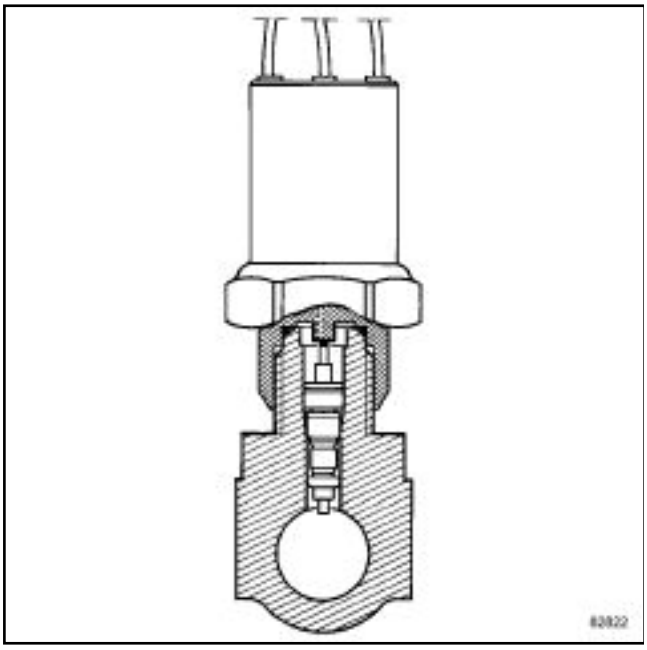

82822

The tri-function pressostat is used to control the air conditioning compressor and the engine cooling fans.

The pressostat is fitted on the high pressure section of the circuit and ensures the following functions:

Low pressure cut-out (approximately **2 bar**):

- If the high pressure in the circuit reaches too low a value (below a given threshold), then the tri-function pressostat cuts the supply to the compressor clutch (e.g. refrigerant fluid load too low, could lead to the compressor seizing up through lack of lubricant and refrigerant fluid).

High pressure cut-out (approximately **27 bar**):

- When the pressure of the circuit is too high (above a given threshold) and represents a danger to the circuit, the tri-function pressostat cuts the supply to the compressor clutch.

Ventilation fans control (approximately **19 bar**):

- If the pressure rises, the tri-function pressostat selects the ventilation fan(s) at either mid-speed or full speed depending on the circumstances. This promotes heat exchange and improves condensation to limit the pressure.

X - PRESSURE SENSOR

This has the same function as the tri-function pressostat, i.e. measuring the pressure in the high pressure circuit.

It sends the signal back to the air conditioning or engine management computer, which manages the system accordingly.

Any work on these components can be carried out without draining the refrigerant fluid circuit: they are mounted on a non-return valve.

WARNING

These components are fitted with a seal: make sure that it is in good condition and lubricate it with the air conditioning oil recommended for the system (see **TN 6001A, Air conditioning, Consumables**).

XI - PASSENGER COMPARTMENT FAN ASSEMBLY CONTROL UNIT

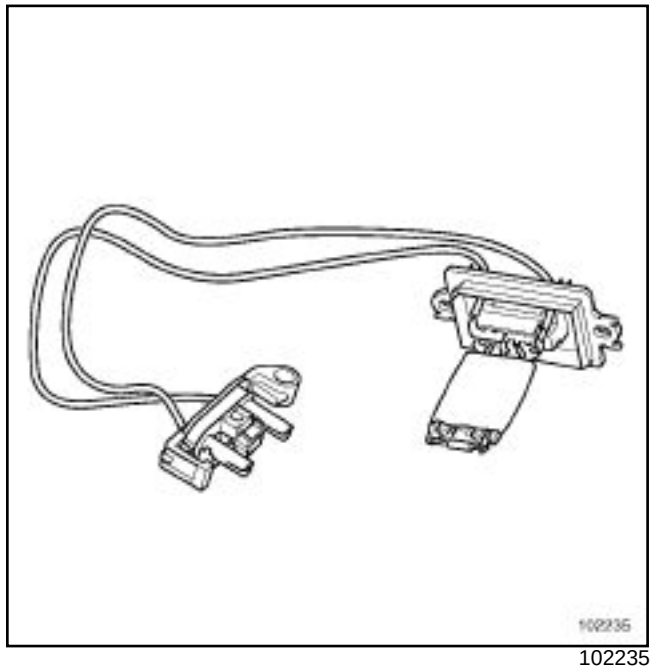

102235

This varies the fan assembly speed using a resistance system.

XII - POWER MODULE

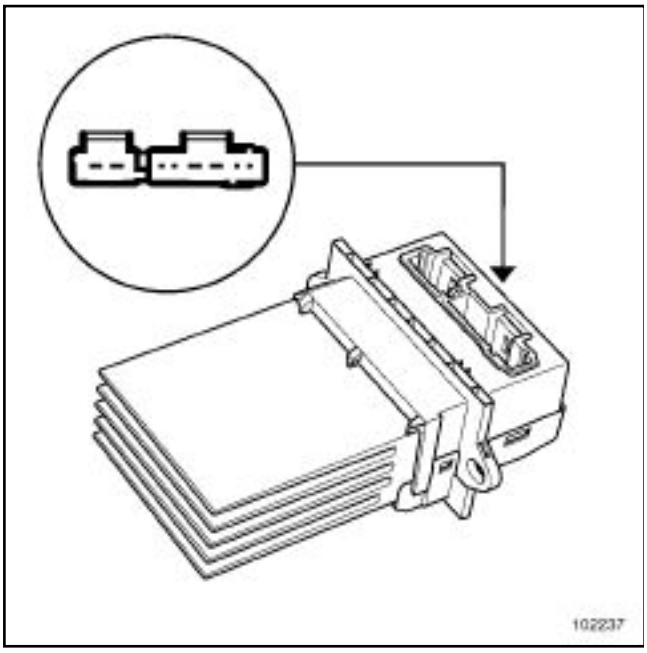

102237

This varies the fan assembly speed using an electronic system.

> Note:
>
> In general, the modules can be accessed without removing the fan unit or any other system.

XIII - FLAP CONTROL MOTORS

These motors are located in the distribution unit and actuate the flaps to direct the flow according to certain criteria:

- The mixing motor is used to mix warm air and cold air to obtain the required comfort level,
- the distribution motor directs the air flow into the passenger compartment via the vents,
- the recirculation motor can re-use the air in the passenger compartment by isolating the compartment from the external air,
- the demisting motor directs the air flow to the windscreen via the vents.

XIV - EVAPORATOR SENSOR

This sensor measures the air temperature at the evaporator; there are different models but the operating principle is the same. This sensor is a negative temperature coefficient thermistor.

With the signal provided by this sensor, the computer can react accordingly to protect the evaporator from freezing by cutting off the compressor.

> Note:
>
> This sensor is not always used; see Workshop Repair Manual for the vehicle concerned.

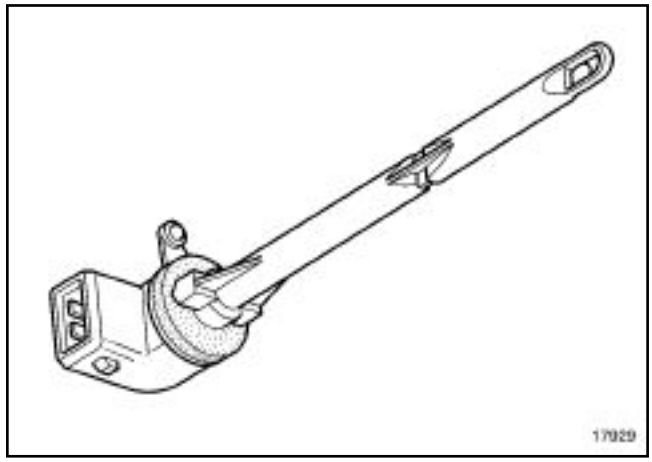

17929

Although the procedure for removal is the same (rotate through a quarter turn), their accessibility in the passenger compartment varies according to the vehicle.

XV - EXTERNAL TEMPERATURE SENSOR

This sensor supplies information about the outside temperature.

It is located either in the right-hand door mirror or in the passenger compartment air inlet.

It is a negative temperature coefficient thermistor.

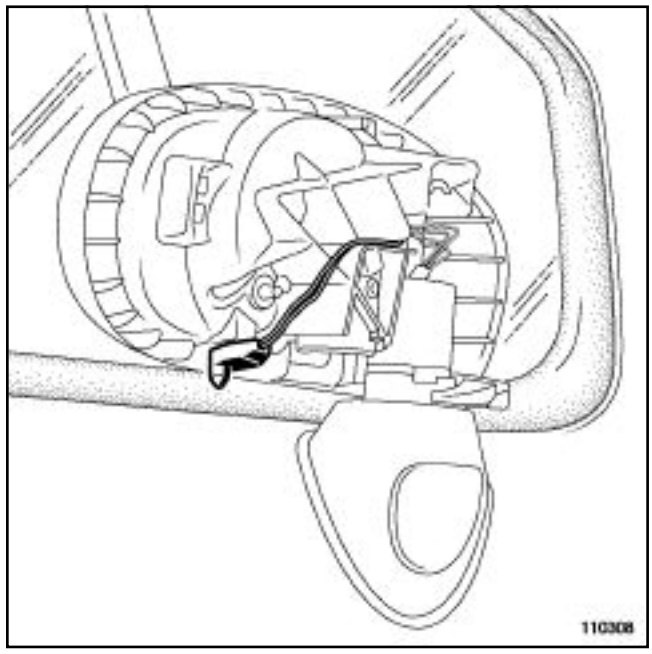

110308

XVI - PASSENGER COMPARTMENT TEMPERATURE SENSOR

This sensor supplies information on the interior temperature.

It is a negative coefficient thermistor.

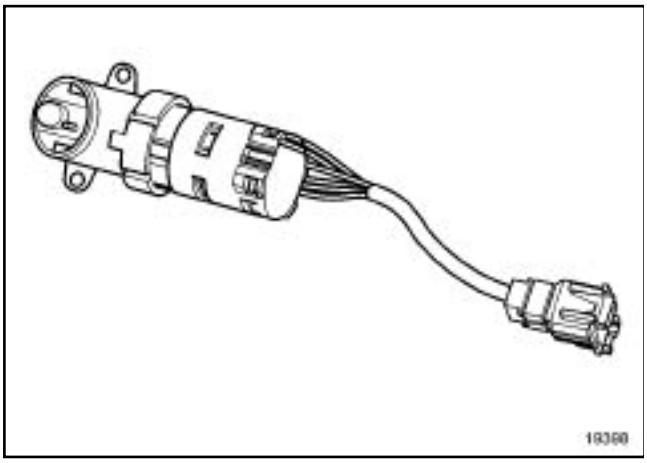

19398

XVII - HUMIDITY DETECTER

This capacitance sensor measures, through the increase in resistance, the humidity of the air in the vehicle interior to determine whether or not air recirculation should be actuated.

XVIII - SOLAR RADIATION DETECTER

This sensor informs the computer of the intensity of sunlight to correct the air flow to the air vents.

XIX - TOXICITY SENSOR

This sensor continuously analyses the change in concentration of gases (CO and NOx) in the passenger compartment to isolate the compartment, if necessary, by actuating the air recirculation system.

Ambient temperature	Acceptable temperature at the centre air vents outlet
15°C	between **4°C** and **8°C**
20°C	between **6°C** and **10°C**
25°C	between **8°C** and **13°C**
30°C	between **12°C** and **16°C**
35°C	between **17°C** and **20°C**
40°C	between **21°C** and **25°C**

PRELIMINARY CHECK

Check the battery voltage (see **80A, Battery, Battery: Test**).

Check that the particle filter is clean (if easily accessible).

> Note:
>
> Check for foreign bodies in the passenger compartment filter housing, and clean thoroughly if necessary.

CHECKING THAT THE AIR CONDITIONING IS EFFICIENT

I - PREPARING THE VEHICLE

Keep the vehicle in the shade for approximately an hour (doors, windows and bonnet closed, centre air vent open).

II - METHOD OF USE

Start the vehicle's engine (leave it idling).

Make sure that the air conditioning is not activated.

Wait **2 minutes**.

Adjust the air conditioning controls:

- temperature: maximum cold setting,
- distribution: centre air vent (all at face level),
- ventilation: maximum setting,
- recirculation: open (external air position).

Check the temperature of the air blown from the centre air vents using a thermometer:

- the temperature must be the same as the ambient air temperature ± **5°C**.

Activate the air conditioning.

Check the temperature of the air blown from the centre air vents using a thermometer, **6 minutes** after the air conditioning is switched on and refer to the table above. The temperature must not change more than ± **0.5°C**.

ADVICE FOR IDENTIFYING THE SYSTEM

Use the diagnostic tool to identify the system fitted in the vehicle (reading the group, program number, etc.).

Find the Fault finding documents corresponding to the system identified.

Before proceeding with any fault finding on the air conditioning, follow these preliminary steps:

The fault detection table below refers to all air conditioning systems (automatic or otherwise). This table is only shown as an example as not all of the components listed are used (see MR of vehicle concerned).

The following figures indicate the most common causes of faults (repeated where there is more than one cause at the same time).

Components	Causes		
	No cold air	Too much cold air	Inefficient operation
Fuses	1	-	-
Air distribution	1	1	-
Air flow	1	-	1
Recirculation flap	-	-	1
Passenger compartment blower	-	-	1
Lack of refrigerant	1	-	2
Compressor belt (condition or tension)	2	-	2
Wiring harness assembly	3	-	2
Evaporator sensor	4	2	3
Sensor signal	4	2	3
Pressure sensor	4	3	4
Cooling fan	-	-	4
Compressor clutch relay	5	-	-
Compressor clutch	5	-	-
Compressor	5	-	5
Expansion valve	5	-	5
Dehydration canister	-	-	5
Control panel	6	4	6

Fault finding table for lack of cold air

Possible cause	Check	Remedy
Belt slipping	Belt tension	Tighten belt
Compressor not working	1- Check the load 2- Check the power supply 3- Check the pressostat	Readjust the load Repair Replace the pressostat

Possible cause	Check	Remedy
Expansion valve	Check the temperature difference between the inlet and outlet	Replace the expansion valve if there is no difference
Calibrated opening	Check the temperature difference between the inlet and outlet	Replace the calibrated opening if there is no difference
Condenser	Check the exterior cleanliness	Clean the exterior of the condenser
Evaporator	Check the exterior cleanliness Check that the evaporator is not frozen	Clean the exterior of the evaporator Check the evaporator sensor
High pressure circuit too high	1- Check the cleanliness of the condenser 2- Excess load 3- Insufficient cooling	Clean the exterior of the condenser Readjust the load Check that the ventilation fans are working properly
Low pressure circuit too high	1- Excess load 2- Check the expansion valve	Readjust the load Replace the expansion valve

Fault finding for detecting leaks:

Component	Detection area	Part to be replaced after first check	Part to be replaced after filling and second check
Condenser	Inlet or outlet	Pipes	Condenser
Evaporator	Connection flange	Pipes	Connection flange and/or evaporator
Compressor	Inlet or outlet	Pipes	Compressor
Dehydration canister	Inlet or outlet	Pipes	Dehydration canister

There are several types of devices for detecting leaks:

- electronic detectors,

- trace detectors.

Note:

Use the electronic detector and then the trace detector to check for leaks.

I - ELECTRONIC DETECTORS

WARNING

Always consult the user manual for the device before carrying out any work.

This device measures variation in the quantity of refrigerant in the air: it emits an audible signal depending on this variation.

The device must be initialised before checking.

To do this:

- immobilise the device,

- calibrate the device in the engine compartment,

- do not start the engine.

This point is then used as standard for detecting the contamination rate.

This equipment is highly sensitive: during the detection process, follow the line of the circuit only as closely as possible in order to limit variations caused by other gases.

This device only detects relatively substantial leaks.

WARNING

Make sure that the sensor at the end of the rod is kept extremely clean and in good condition.

II - TRACE DETECTORS

Detecting leaks using a trace involves adding a dye to the refrigerant, and locating the points of loss using an ultraviolet light.

IMPORTANT

Be sure to observe the safety instructions when working on the cold loop (see **62A, Air conditioning, Safety instructions**).

WARNING

The procedure described must be observed.

Note:

Use this leak protection procedure as a last resort for « leaks that cannot be found ».

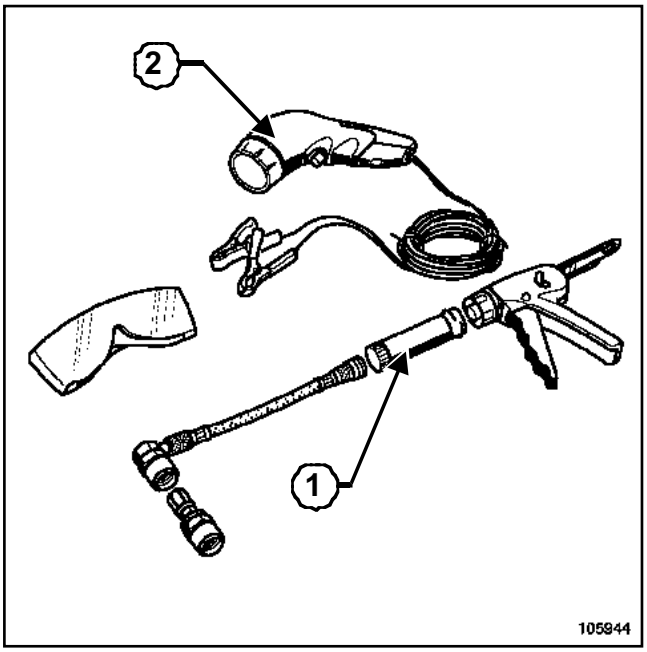

105944

The refrigerant leak detection procedure is based on the use of a dye available as a single-use capsule (**1**): fluid traces are revealed using an ultraviolet light (**2**).

The dye remains in the air conditioning system.

The condition of the cold loop can be checked using an ultraviolet light without introducing fresh dye.

If there is nothing to indicate that dye has been used previously (label, etc.):

- have a cloth ready,
- release a small jet of refrigerant through the two valves,
- shine the ultraviolet light inside the valves,
- check for fluorescent traces.

WARNING
Adding dye to the cold loop is prohibited if fluorescent traces appear.

Add a dose of detection dye if there are no fluorescent traces or label.

Affix a label.

Record the date when the dye was added.

1 - Injecting dye into the circuit

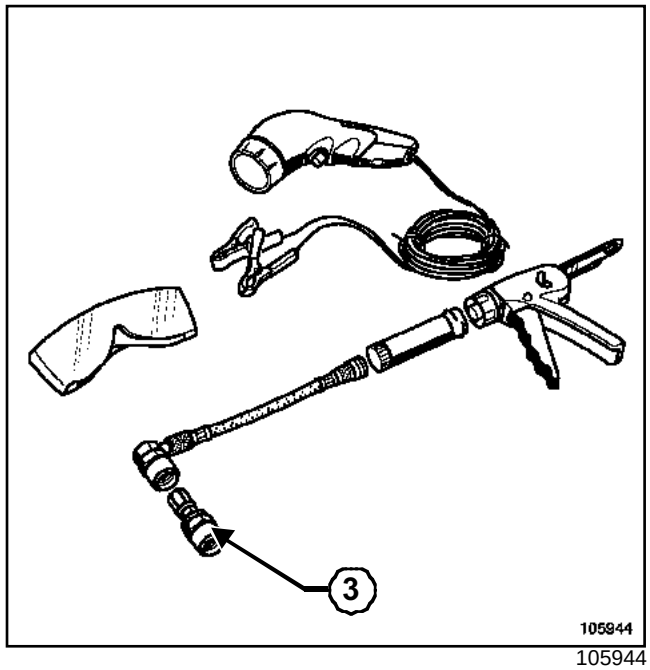

105944

Set up the dye injection system on the low pressure valve, observing the product's direction of circulation, using union (**3**), for vehicles with a single valve.

Inject the dye into the circuit.

Run the air conditioning system for approximately **15 minutes**.

2 - Leak detection procedure

Note:

After any work on air conditioning circuit leaks on the Laguna II, Vel Satis and Espace IV, fault **Refrigerant DF033** must always be cleared using the diagnostic tool. The compressor cannot operate until the fault is cleared.

Carry out an initial check (with the engine stopped) by sweeping the circuit with an ultraviolet light.

Note:

Use an adjustable mirror wherever access is difficult.

If no leak is apparent:

- carefully clean the exterior of the coolant circuit,
- run the air conditioning system until the leak can be detected (if no leak is detected, check the condition of the evaporator).

WARNING

After injecting dye into the refrigerant, be sure to indicate this on a label (supplied with the dye capsule), and the date of the operation. The label should be positioned so that it is visible close to the cold loop filler valve (shock absorber cup).

Equipment required
filling station

I - FLUID

Previously, the refrigerant used was **R12** refrigerant (see**NT 2494A, R12/R134a Conversion and NT 2422A, R12/R134a Conversion**). It has been withdrawn from use and replaced with refrigerant fluid **R134A**, which is less hazardous.

> Note:
>
> All vehicles using **R134A** have a label in the engine compartment specifying its use.

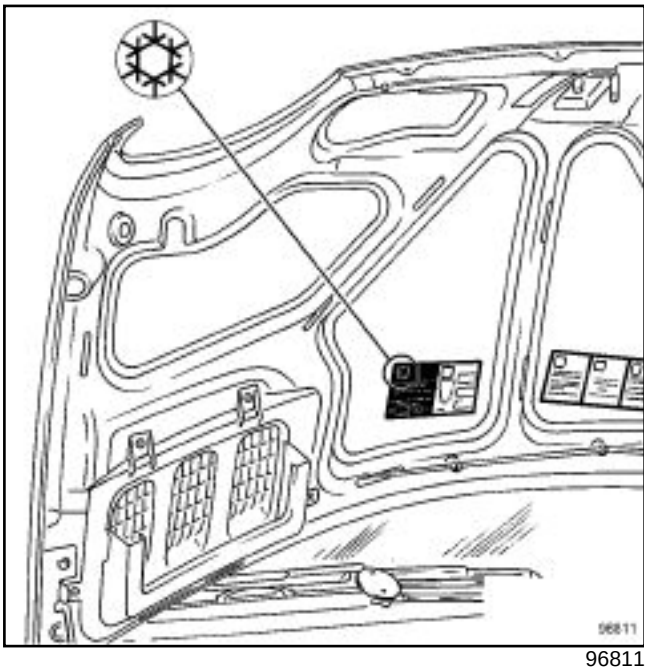

96811

Refrigerant **R134A** is colourless in its liquid state, and odourless and invisible in its gaseous state.

A summary table provides the quantities of refrigerant for the system for the various vehicles (see **TN 6001A, Air conditioning, Consumables**).

II - OIL

The cold loop contains a special oil to lubricate the compressor.

Fill up with the same quantity of oil as was drained.

When replacing a component, top up the oil with the volume required for the component replaced (see **NT 6001A, Air conditioning, Consumables**).

When replacing a compressor and one or more of the various air conditioning circuit components, the quantity of oil in the compressor is sufficient to lubricate the entire circuit. Do not add oil.

> **WARNING**
>
> Lubricants are not mutually compatible: always adhere to the types and grades of oil required for each compressor, even when topping up, or you could break the cold loop.
>
> Always close oil cans after use to prevent moisture getting inside, and never use oil contained in a can that has been open for a long time (viscous appearance).

III - PROCUREMENT OF OIL

PAG SP10: Part no. 77 01 419 313

PLANETELF PAG 488: Part no. 77 11 172 668

To find out the type of oil used (see **62A, Air conditioning, Consumables**).

IV - RECOVERING REFRIGERANT FLUID

Note:

- The air conditioning circuit is fitted with a single filler valve; some stations only require the high pressure pipe to be used (see **the filling station instructions**).
- Depending on the situation, run the system for a few minutes before recovering the coolant to improve drainage.

IMPORTANT

These procedures must be followed in order to prevent:

- gas escaping when the circuit is opened,
- environmental damage through the release of gas into the atmosphere when the circuit is opened or when a vacuum is created.

When draining or checking the refrigerant fluid fill load, three situations must be taken into account:

- the engine and air conditioning are working (scenario A),
- the engine is working but not the air conditioning (scenario B),
- neither the engine nor the air conditioning are working (scenario C).

Scenario A:

- run the air conditioning until the cooling fan has been triggered twice,
- switch off the engine,
- drain for the first time (note down the original value),
- wait **15 minutes**,
- check that the relative pressure is no more than **0 bar**,
- start the drain cycles again if the relative pressure is above **0 bar**,
- add together the values of the various draining operations; the fill is confirmed as being correct if the volume of refrigerant fluid is the specified fill **+ 35 g** or **- 100 g**.

Scenario B:

- run the engine until the cooling fan is triggered twice,
- switch off the engine,
- drain for the first time (note down the value),
- wait **15 minutes**,
- run the engine until the cooling fan is triggered twice,
- drain for the second time (note down the value),
- start the drain cycles again if the relative pressure is above **0 bar**,
- add together the values of the various draining operations; the fill is confirmed as being correct if the volume of refrigerant fluid is the specified fill **+ 35 g** or **- 100 g**.

Scenario C:

- drain for the first time (note down the value),
- wait **2 hours**,
- start the drain cycles again if the relative pressure is above **0 bar**,
- add together the values of the various draining operations; the fill is confirmed as being correct if the volume of refrigerant fluid is the specified fill **+ 35 g** or **- 100 g**.

V - CREATION OF A VACUUM

Evacuation needs to be carried out properly before the filling procedure, otherwise the air conditioning will not operate properly.

There are two scenarios to consider:

- the vacuum will be created immediately after draining (scenario A),
- the vacuum will be created after a delay of several hours or days (scenario B).

Scenario A:

- creating a vacuum takes **20 minutes**.

Scenario B:

- creating a vacuum takes **45 minutes** to remove any residual moisture.

Test the tightness once evacuation is complete (some stations do this automatically).

VI - FILLING

> Note:
>
> After any work on air conditioning circuit leaks on the Laguna II, Vel Satis and Espace IV, filling fault **Refrigerant DF033** must always be cleared using the diagnostic tool. The compressor cannot operate until the fault is cleared.

Top up the oil with the recommended type and volume of oil, depending on the work carried out.

Fill up **Air conditioning, Consumables**).

Empty the pipes on the **filling station**.

Check that the system is working correctly (see**Air conditioning, Air conditioning: Test**).

Check for leaks.

Air conditioning cleaner: Part no. 77 01 410 170

I - TWINGO, LAGUNA, SAFRANE, CLIO I, MEGANE I

Position the vehicle on a lift.

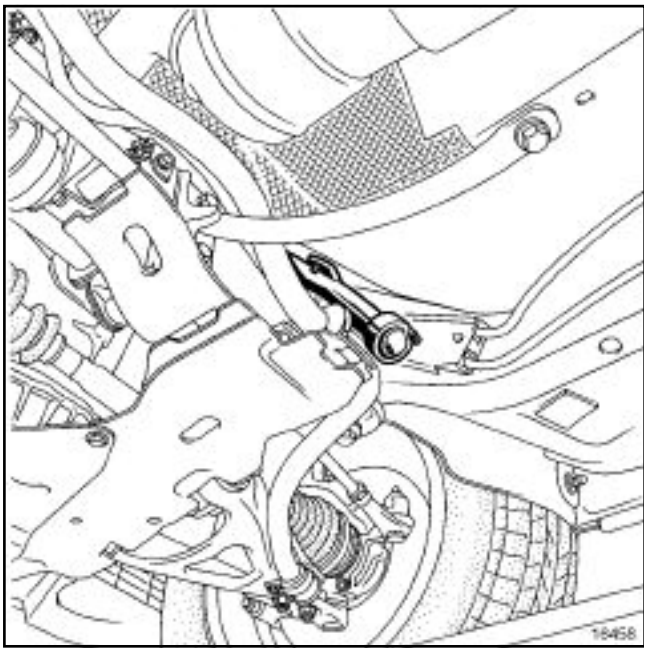

16458

Run an extension piece through the condensation drain pipe to apply the air conditioning cleaner.

Spray the entire contents of the can.

Leave the product to work for **15 minutes**.

Run the fan assembly very slowly for **5 minutes**.

WARNING
Do not spray the cleaner via the air inlet, as this could damage the fan assembly.

II - CLIO III

1 - Left-hand drive

a - REMOVAL

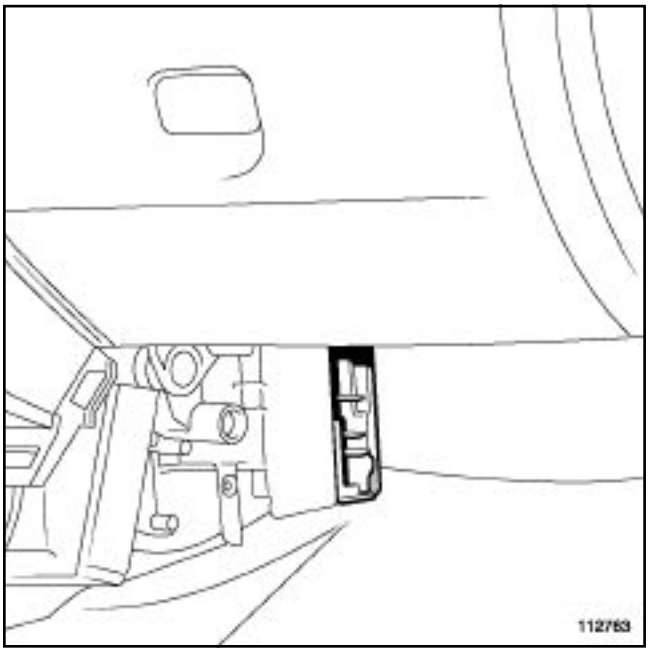

112763

Unclip the passenger compartment filter.

Note:
Foreign bodies (leaves, insects etc.) are likely to accumulate in the passenger compartment filter. Remove the filter with care so as to prevent foreign bodies getting into the evaporator.

Remove the passenger compartment filter.

Check for foreign bodies in the passenger compartment filter housing, and clean thoroughly if necessary.

Apply the air conditioning cleaner using an extension piece. The end of the extension piece must be positioned at the base of the evaporator.

Spray the entire contents of the can.

Leave the product to work for **15 minutes**.

Run the fan assembly very slowly for **5 minutes**.

WARNING
Do not spray the cleaner via the air inlet, as this could damage the fan assembly.

b - REFITTING

Refit the passenger compartment filter.

2 - Right-hand drive

a - REMOVAL

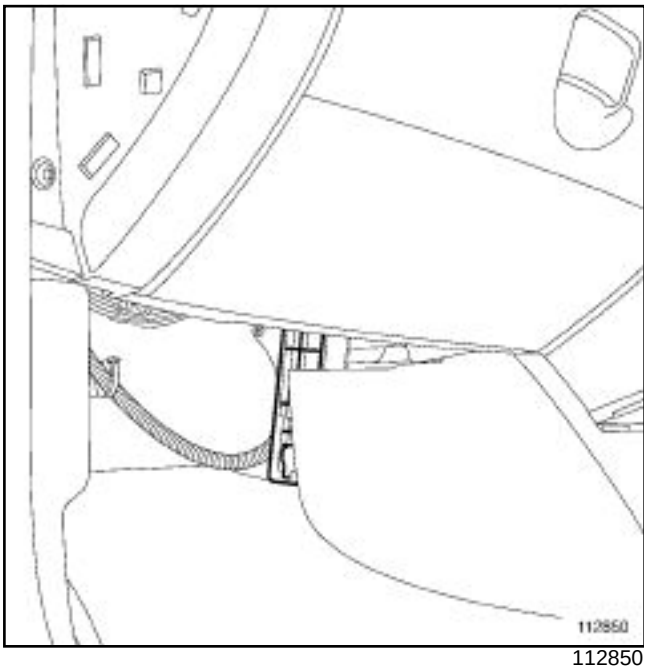

112850

Unclip the passenger compartment filter.

> Note:
>
> Foreign bodies (leaves, insects etc.) are likely to accumulate in the passenger compartment filter. Remove the filter with care so as to prevent foreign bodies getting into the evaporator.

Remove the passenger compartment filter.

Check for foreign bodies in the passenger compartment filter housing, and clean thoroughly if necessary.

Apply the air conditioning cleaner using an extension piece. The end of the extension piece must be positioned at the base of the evaporator.

Spray the entire contents of the can.

Leave the product to work for **15 minutes**.

Run the fan assembly very slowly for **5 minutes**.

> **WARNING**
>
> Do not spray the cleaner via the air inlet, as this could damage the fan assembly.

b - REFITTING

Refit the passenger compartment filter.

III - MEGANE II

1 - Left-hand drive

a - REMOVAL

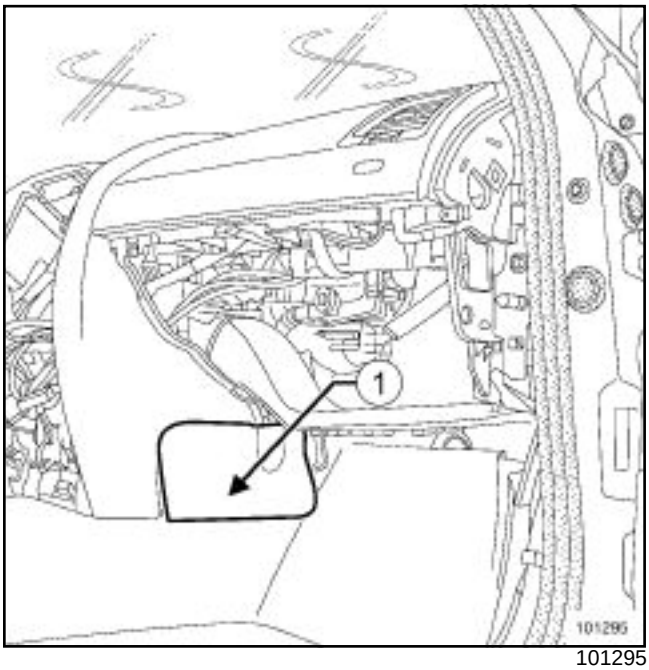

101295

Remove the trim at (**1**).

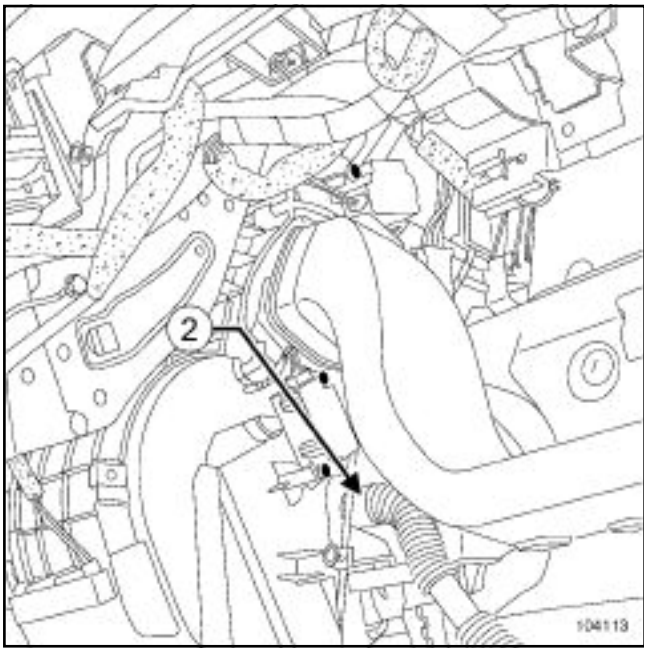

104113

Move the refrigerant pipe (**2**) to one side of the distribution unit.

Turn the refrigerant pipe through a quarter turn.

Remove the refrigerant pipe at the distribution unit end.

Apply the air conditioning cleaner using an extension piece. The end of the extension piece must be positioned at the base of the evaporator.

Spray the entire contents of the can.

Leave the product to work for **15 minutes**.

Run the fan assembly very slowly for **5 minutes**.

WARNING
Do not spray the cleaner via the air inlet, as this could damage the fan assembly.

b - REFITTING

Refit the refrigerant pipe at the distribution unit end.

Refit the trim under the glovebox.

2 - Right-hand drive

a - REMOVAL

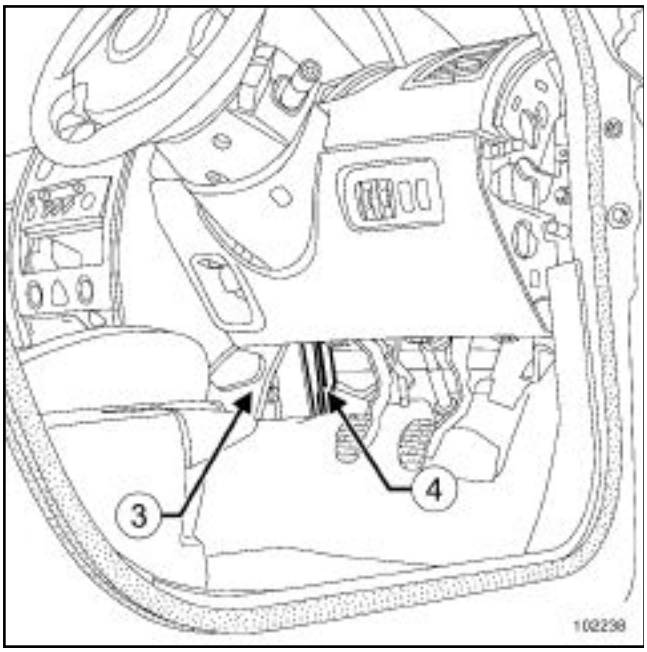

102238

Remove the trim at (**3**).

> Note:
>
> Foreign bodies (leaves, insects etc.) are likely to accumulate in the passenger compartment filter. Remove the filter with care so as to prevent foreign bodies getting into the evaporator.

Check for foreign bodies in the passenger compartment filter housing, and clean thoroughly if necessary.

Remove passenger compartment filter (**4**).

> Note:
>
> Break the rigid sections of the filter in order to remove it.

Apply the air conditioning cleaner using an extension piece. The end of the extension piece must be positioned at the base of the evaporator.

Spray the entire contents of the can.

Leave the product to work for **15 minutes**.

Run the fan assembly very slowly for **5 minutes**.

> **WARNING**
>
> Do not spray the cleaner via the air inlet, as this could damage the fan assembly.

b - REFITTING

Refit the passenger compartment filter.

Refit the trim under the glovebox.

> Note:
>
> - Break the rigid sections of the filter to make it easier to refit.
>
> - Be sure not to damage the filtering section.

IV - LAGUNA II

1 - Left-hand drive

a - REMOVAL

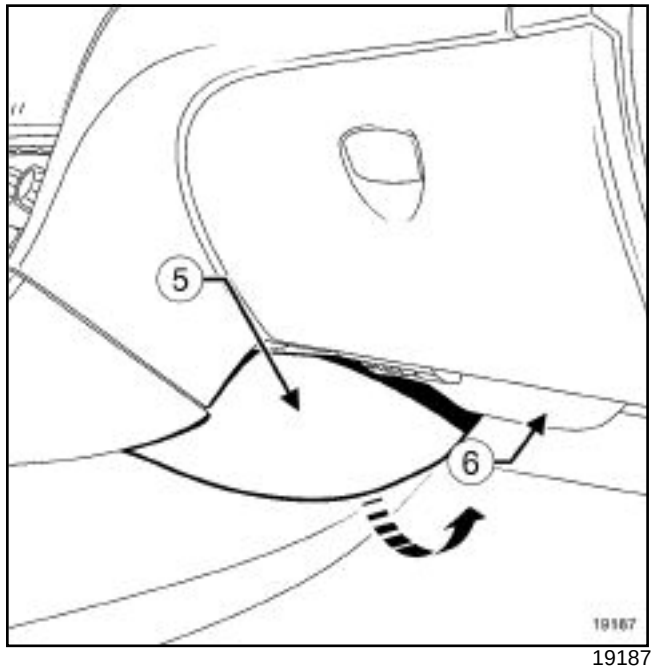

19187

Remove:

- the right-hand traim from the centre console (**5**),
- the soundproofing below the storage compartment (**6**).

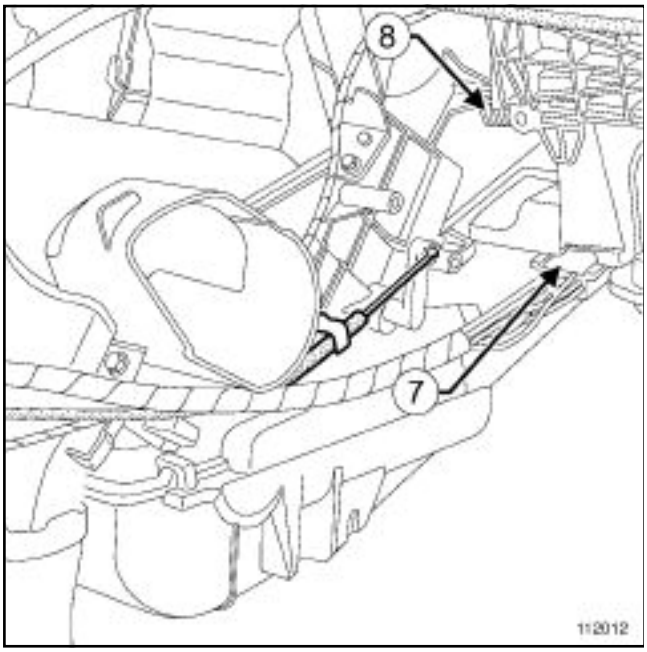

112012

Disconnect the connector (**7**) from the fan assembly.

Move the refrigerant pipe (**8**).

Apply the air conditioning cleaner using an extension piece. The end of the extension piece must be positioned at the base of the evaporator.

Spray the entire contents of the can.

Leave the product to work for **15 minutes**.

Run the fan assembly very slowly for **5 minutes**.

> **WARNING**
> Do not spray the cleaner via the air inlet, as this could damage the fan assembly.

b - REFITTING

Refit the refrigerant pipe.

Connect the fan assembly connector.

Refit the soundproofing below the storage compartment.

Refit the right-hand trim to the centre console,

2 - Right-hand drive

a - REMOVAL

Remove the soundproofing below the storage compartment.

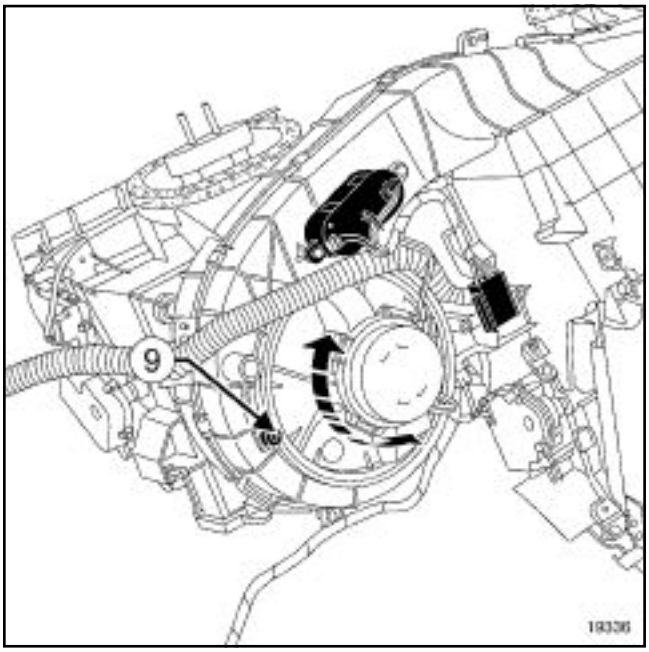

19336

Remove fan assembly mounting bolt (**9**).

Turn the fan assembly through a quarter turn.

Remove the fan assembly.

Apply the air conditioning cleaner using an extension piece.

Spray the entire contents of the can.

Leave the product to work for **15 minutes**.

Run the fan assembly very slowly for **5 minutes**.

> **WARNING**
> Do not spray the cleaner via the air inlet, as this could damage the fan assembly.

b - REFITTING

Refit the fan assembly.

Refit the fan assembly mounting bolt.

Refit the soundproofing below the storage compartment.

V - SCENIC II

Left-hand and Right-hand drive

a - REMOVAL

Remove the engine covers.

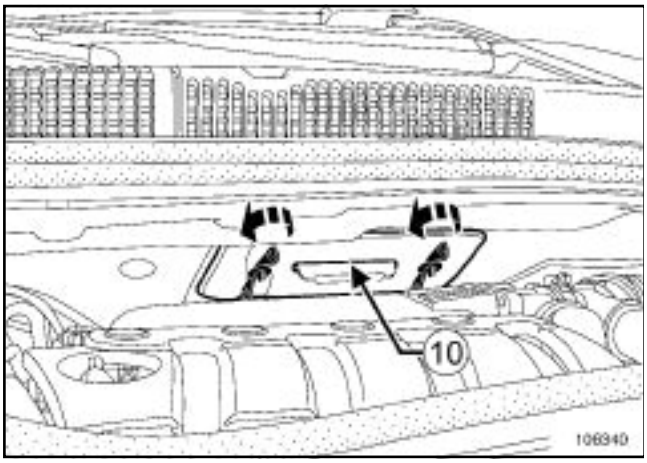

106340

Remove:

- the passenger compartment filter access flap (**10**),

> Note:
>
> Break the rigid sections of the filter in order to remove it.

> Note:
>
> Foreign bodies (leaves, insects etc.) are likely to accumulate in the passenger compartment filter. Remove the filter with care so as to prevent foreign bodies getting into the evaporator.

Remove the passenger compartment filter.

Check for foreign bodies in the passenger compartment filter housing, and clean thoroughly if necessary.

Apply the air conditioning cleaner using an extension piece. The end of the extension piece must be positioned at the base of the evaporator.

Spray the entire contents of the can.

Leave the product to work for **15 minutes**.

Run the fan assembly very slowly for **5 minutes**.

> **WARNING**
> Do not spray the cleaner via the air inlet, as this could damage the fan assembly.

b - REFITTING

Refit the passenger compartment filter.

Refit the passenger compartment filter access flap,

> Note:
>
> - Break the rigid sections of the filter to make it easier to refit.
>
> - Be sure not to damage the filtering section.

VI - CLIO II

a - REMOVAL

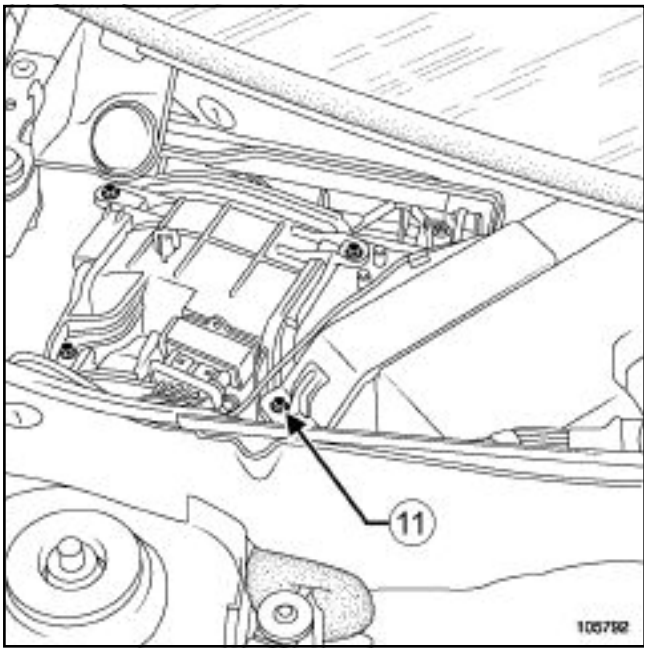

105792

Remove:

- the wiper arms,
- the scuttle panel grille (see **MR 338 Bodywork, 55D, Exterior protection, Scuttle panel grille**),
- the fan assembly guard mounting bolts,
- the passenger compartment filter cover mounting bolts (**11**).
- the passenger compartment filter.

> Note:
>
> Foreign bodies (leaves, insects etc.) are likely to accumulate in the passenger compartment filter. Remove the passenger compartment filter with care so as to prevent foreign bodies getting into the evaporator.

Remove the passenger compartment filter.

Check for foreign bodies in the passenger compartment filter housing, and clean thoroughly if necessary.

Apply the air conditioning cleaner using an extension piece. The end of the extension piece must be positioned at the base of the evaporator.

Spray the entire contents of the can.

Leave the product to work for **15 minutes**.

Run the fan assembly very slowly for **5 minutes**.

> **WARNING**
>
> Do not spray the cleaner via the air inlet, as this could damage the fan assembly.

b - REFITTING

Refit the passenger compartment filter.

Refit the passenger compartment filter cover.

Refit the fan assembly guard bolt.

Refit the scuttle panel grille.

Refit the wiper arms.

VII - KANGOO

a - REMOVAL

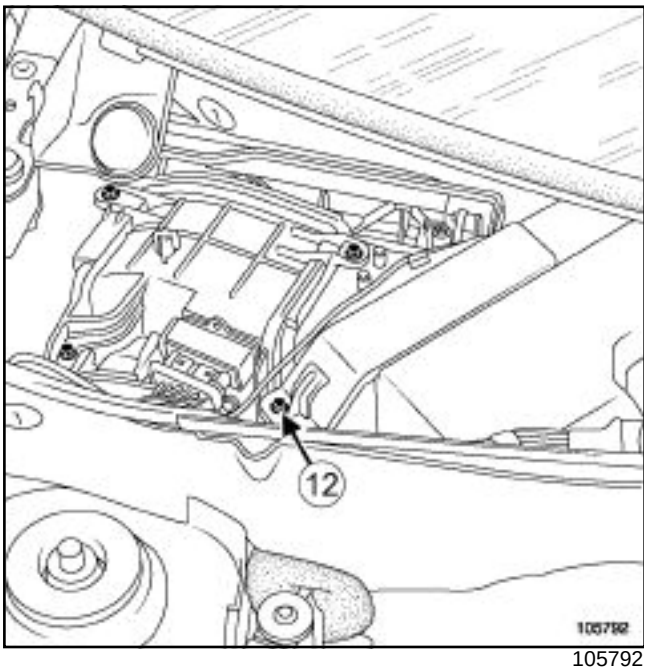

105792

Remove:

- the wiper arms,
- the scuttle panel grille (see **MR 381 Bodywork, 56A, Exterior accessories, Scuttle panel grille: Removal - Refitting**).
- the fan assembly guard mounting bolts,
- the passenger compartment filter cover mounting bolts (**12**).
- the passenger compartment filter.

> Note:
>
> Foreign bodies (leaves, insects etc.) are likely to accumulate in the passenger compartment filter. Remove the passenger compartment filter with care so as to prevent foreign bodies getting into the evaporator.

Remove the passenger compartment filter.

Check for foreign bodies in the passenger compartment filter housing, and clean thoroughly if necessary.

Apply the air conditioning cleaner using an extension piece. The end of the extension piece must be positioned at the base of the evaporator.

Spray the entire contents of the can.

Leave the product to work for **15 minutes**.

Run the fan assembly very slowly for **5 minutes**.

> **WARNING**
>
> Do not spray the cleaner via the air inlet, as this could damage the fan assembly.

b - REFITTING

Refit the passenger compartment filter.

Refit the passenger compartment filter cover.

Refit the fan assembly guard bolt.

Refit the scuttle panel grille.

Refit the wiper arms.

VIII - ESPACE IV

Position the vehicle on a lift.

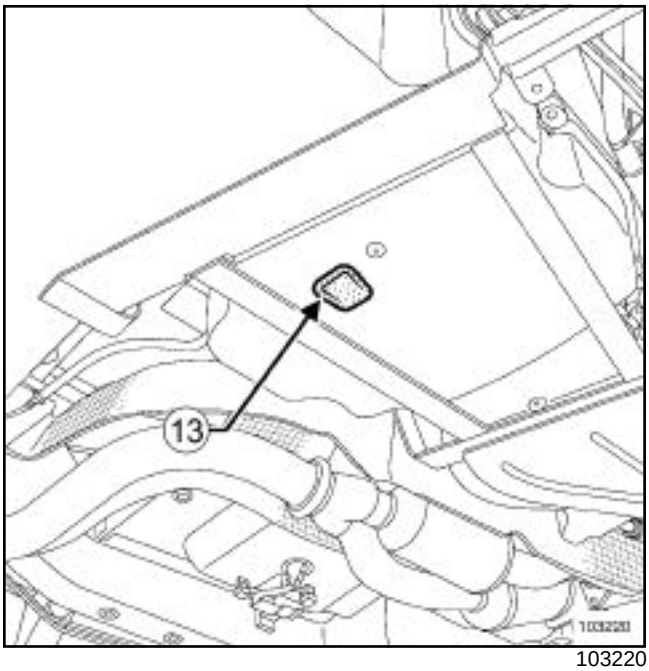

103220

Run an extension piece through the condensation drain pipe (**13**) to apply the air conditioning cleaner.

Spray the entire contents of the can.

Leave the product to work for **15 minutes**.

Run the fan assembly very slowly for **5 minutes**.

> **WARNING**
>
> Do not spray the cleaner via the air inlet, as this could damage the fan assembly.

IX - MODUS

1 - Left-hand drive

a - REMOVAL

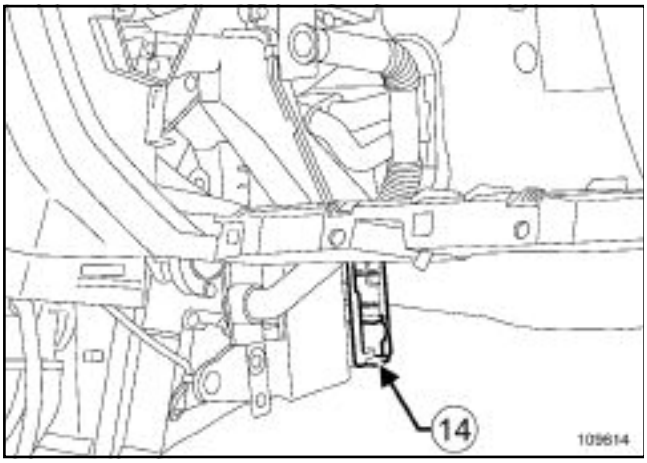

109614

Raise passenger compartment filter tab (**14**).

Rotate the filter around the upper section of the base of the filter.

Release the upper section of the base of the filter from the air conditioning unit.

> Note:
>
> Foreign bodies (leaves, insects etc.) are likely to accumulate in the passenger compartment filter. Remove the passenger compartment filter with care so as to prevent foreign bodies getting into the evaporator.

Remove the passenger compartment filter.

Check for foreign bodies in the passenger compartment filter housing, and clean thoroughly if necessary.

Apply the air conditioning cleaner using an extension piece. The end of the extension piece must be positioned at the base of the evaporator.

Spray the entire contents of the can.

Leave the product to work for **15 minutes**.

Run the fan assembly very slowly for **5 minutes**.

> **WARNING**
>
> Do not spray the cleaner via the air inlet, as this could damage the fan assembly.

b - REFITTING

Tilt the passenger compartment filter before inserting it into the air conditioning unit.

Engage the upper section of the base of the filter into the air conditioning unit.

2 - Right-hand drive

a - REMOVAL

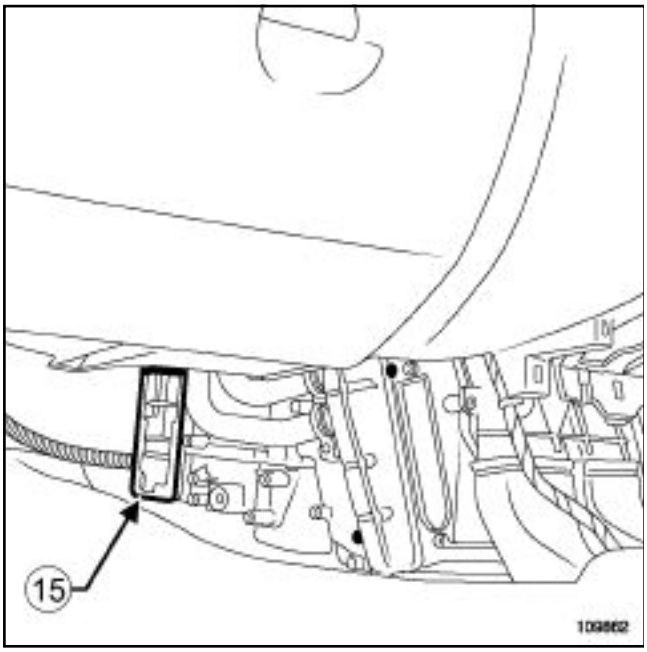

109862

Raise passenger compartment filter tab (**15**).

Rotate the filter around the upper section of the base of the filter.

Release the upper section of the base of the filter from the air conditioning unit.

> Note:
>
> Foreign bodies (leaves, insects etc.) are likely to accumulate in the passenger compartment filter. Remove the passenger compartment filter with care so as to prevent foreign bodies getting into the evaporator.

Remove the passenger compartment filter.

Check for foreign bodies in the passenger compartment filter housing, and clean thoroughly if necessary.

Apply the air conditioning cleaner using an extension piece. The end of the extension piece must be positioned at the base of the evaporator.

Spray the entire contents of the can.

Leave the product to work for **15 minutes**.

Run the fan assembly very slowly for **5 minutes**.

> **WARNING**
>
> Do not spray the cleaner via the air inlet, as this could damage the fan assembly.

b - REFITTING

Tilt the passenger compartment filter before inserting it into the air conditioning unit.

Engage the upper section of the base of the filter into the air conditioning unit.

X - MASTER

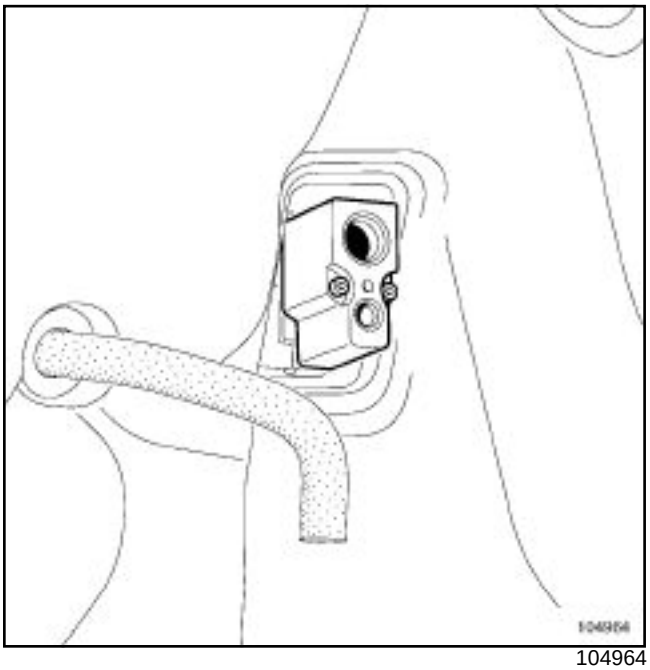

104964

Apply the cleaner using an extension piece via the condensation drain pipe (located on the engine compartment side bulkhead).

> Note:
>
> Bend the end piece so that when it is inserted into the condensation drain pipe it is forced to the left-hand side of the technician.

Spray the entire contents of the can.

Leave the product to work for **15 minutes**.

Run the fan assembly very slowly for **5 minutes**.

> **WARNING**
>
> Do not spray the cleaner via the air inlet, as this could damage the fan assembly.

XI - TRAFIC

a - REMOVAL

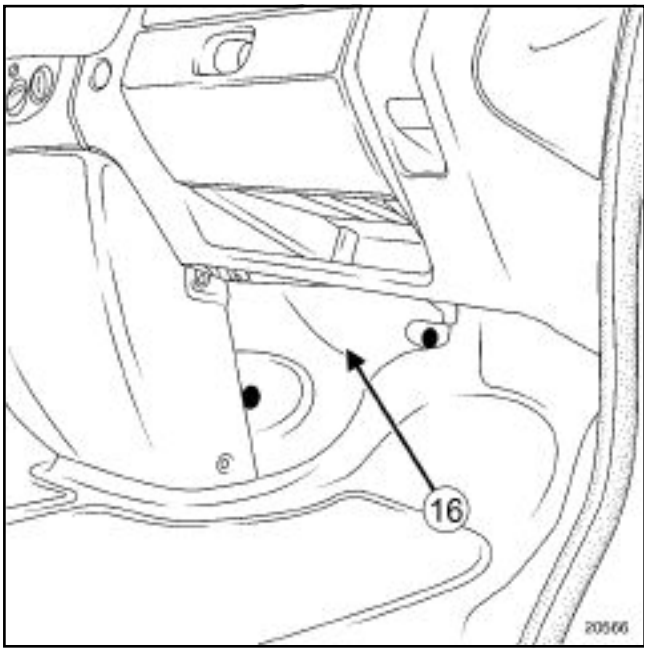

20566

Remove the trim at (**16**).

Remove the refrigerant pipe at the distribution unit end.

Apply the air conditioning cleaner using an extension piece. The end of the extension piece must be positioned at the base of the evaporator.

Spray the entire contents of the can.

Leave the product to work for **15 minutes**.

Run the fan assembly very slowly for **5 minutes**.

> **WARNING**
> Do not spray the cleaner via the air inlet, as this could damage the fan assembly.

b - REFITTING

Refit the refrigerant pipe at the distribution unit end.

Refit the trim under the glovebox.

XII - VELSATIS

a - REMOVAL

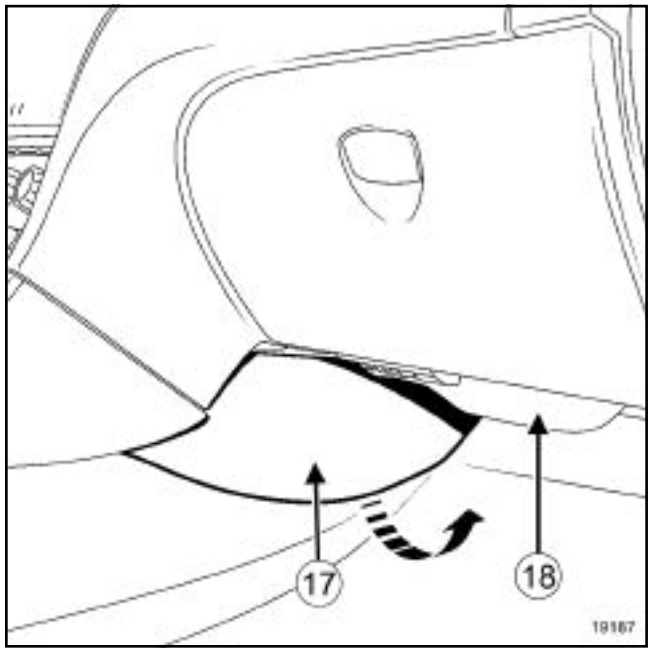

19187

Remove:

- the right-hand trim from the centre console (**17**),
- the soundproofing below the storage compartment (**18**).

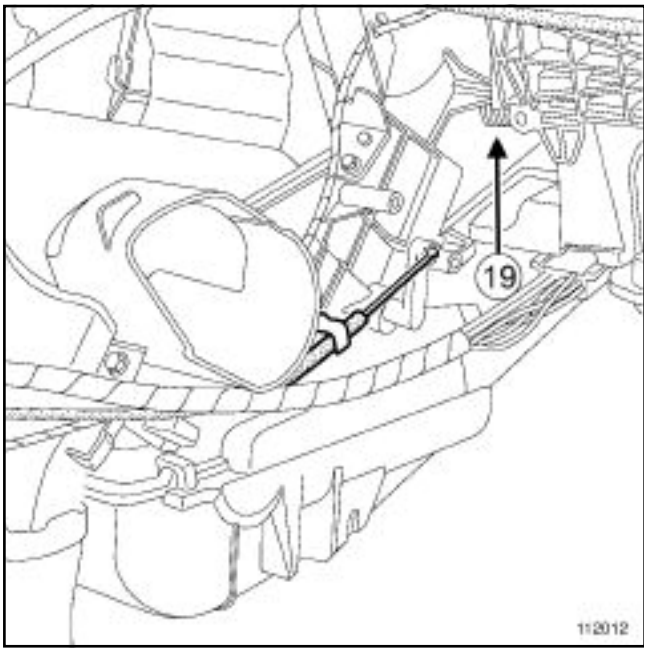

112012

Move refrigerant pipe (**19**).

Apply the air conditioning cleaner using an extension piece. The end of the extension piece must be positioned at the base of the evaporator.

Spray the entire contents of the can.

Leave the product to work for **15 minutes**.

Run the fan assembly very slowly for **5 minutes**.

WARNING
Do not spray the cleaner via the air inlet, as this could damage the fan assembly.

b - REFITTING

Refit the refrigerant pipe.

Refit the soundproofing below the storage compartment.

Refit the right-hand trim to the centre console,

RENAULT

Technical Note 6002A

XXXX

Checking and recharging batteries before vehicle delivery for After-Sales and Second-hand vehicle preparation

This note cancels Technical Note 6002A of September 2005

77 11 327 942 **Edition 4 - NOVEMBER 2005** **EDITION ANGLAISE**

"The repair procedures given by the manufacturer in this document are based on the technical specifications current when it was prepared.

The procedures may be modified as a result of changes introduced by the manufacturer in the production of the various component units and accessories from which his vehicles are constructed."

All rights reserved by RENAULT s.a.s.

Copying or translating, in part or in full, of this document or use of the service part reference numbering system is prohibited without the prior written authority of RENAULT s.a.s..

© Renault s.a.s. 2005

Contents

Page

80A BATTERY

Battery: Checking **80A-1**

General information 80A-1

Test procedure
- Using Midtronics 80A-3

Detailed operating procedures
- Test conditions 80A-4
- Claim completion and coding 80A-4
- Equipment to be used 80A-4
- Test using the Midtronics tool 80A-5

Battery: Advice **80A-7**

- Precautions before disconnecting and after reconnecting batteries 80A-7

Battery charging **80A-8**

Battery charging procedure
- Charging equipment to be used 80A-8
- Battery with or without warning light 80A-9

GENERAL INFORMATION

This Technical Note deals with the battery checking procedure, and the equipment to be used for preparing a used vehicle or for After-Sales.

The battery must be kept charged throughout the used vehicle's storage period, with regular checks following the procedure described in this note.

To ensure that the used vehicle is delivered with a sound battery, the battery must be checked as late as possible (as close as possible to the delivery of the used vehicle to the customer), allowing for any time needed for recharging or replacing the battery.

This should enable you to deal with the various cases of discharge encountered between preparation and delivery: display, storage, etc.

If the battery is equipped with a warning light (**1**), this is reserved for preparing a new vehicle and must not be used for After-Sales.

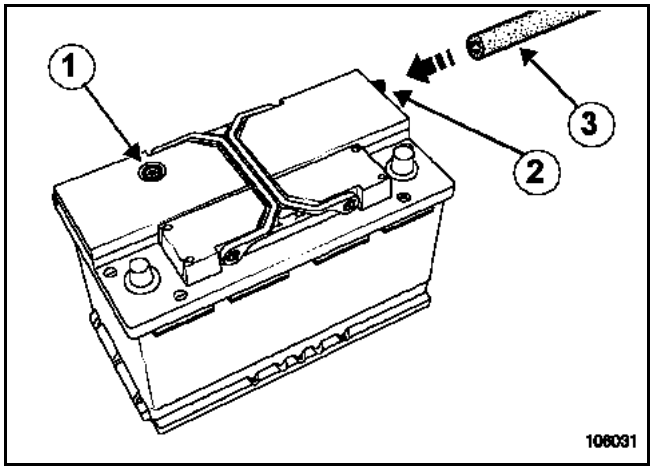

1 Warning light
2 Degassing vent
3 Degassing pipe

Whatever the battery type, use the **MIDTRONICS R330** (Elé. 1593) tool to carry out the check.

> Note:
> After checking the battery using the **MIDTRONICS R330** tool, note down the **MIDTRONICS R330** Battery OK code on the used vehicle checklist.

Visual inspection:

- **of the mounting:** the battery must be mounted correctly (see the MR for the vehicle concerned, 80A, Battery, Battery: Removal - Refitting). Excessive tightening is not beneficial and can be dangerous, as it can damage, or even break, the battery. Conversely, insufficient tightening allows too much play, and there may be wear caused by battery movement and breakage caused by impact.

- **of the terminals:** check that the connectors are securely attached to the battery terminals.

- **of the battery:** make sure that there are no cracks or breakages, traces of acid, or creep leakage (sulfation) on the terminals. If any of these are present, replace the battery and clean the surrounding area.

  Check that the degassing pipe (depending on the version) is properly connected to the battery vent.

NOTE
All these vehicles are equipped with a low water consumption battery. Opening the battery and topping up the electrolyte level are prohibited.

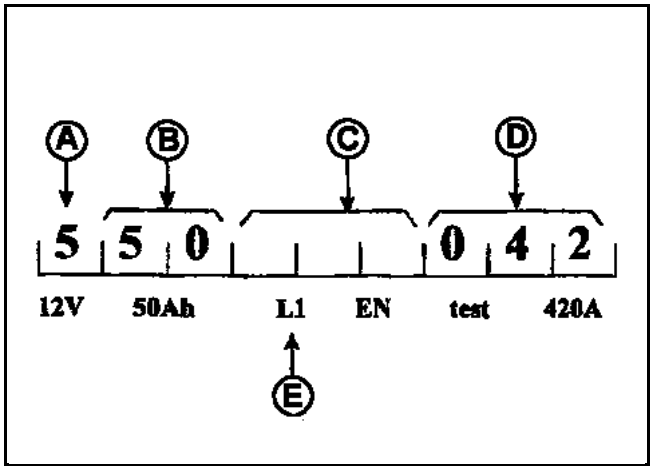

A **+ 12 V code**
B **Electrical capacity**
C **Location of terminals, size of tray, quality, performance level (if shown)**
D **Maximum current when starting (e.g. 420 A, is written 042)**
E **Dimensions code (LB = small size)**

CHECKING USING THE MIDTRONICS R330 TOOL

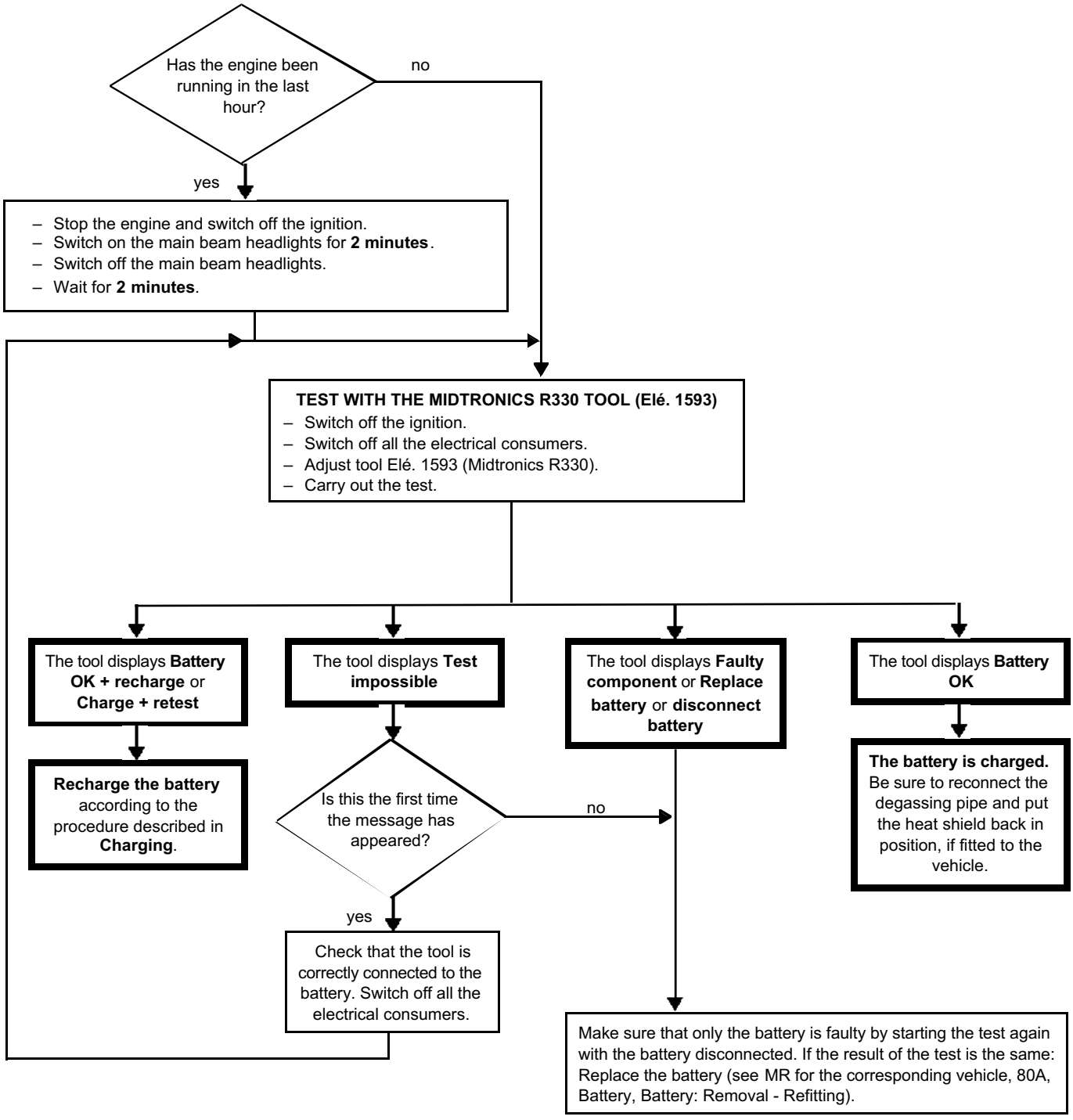

INSPECTION PROCEDURE USING THE MIDTRONICS TOOL

Special tooling required	
Elé. 1593	MIDTRONICS R330 battery tester

TEST CONDITIONS

The measurement must be taken when the vehicle is stationary and the **ignition is off**.

If the engine has been running during the last hour, put the battery in test condition, in other words:
- switch the engine off,
- switch on the main beam headlights for **2 minutes**.
- switch off the main beam headlights,
- wait for **2 minutes**,
- switch off the ignition.

CLAIM COMPLETION AND CODING

- Operation time:

Additional battery recharge
– Operation code: **8210**
– Allocated time: **0.3 hours**

Battery replacement
– Operation code: **8207**
– Allocated time: **See Operation Time**,

- Part to be indicated: part number of faulty battery (if replaced).
  Or faulty operation time code to be indicated: recharging the battery (if recharging).

EQUIPMENT TO BE USED

Tester approved by the Service Department:
MIDTRONICS MICRO R330

Tool available as part no.: **Elé. 1593**

Equipment available in France from the Parts Department.

Tool available in 6 languages.

For other countries, consult your contact in your country.

IMPORTANT
Failure to observe the procedure, or poorly maintained equipment, may result in incorrect measurements, which could be:
– detrimental to the customer (the battery is not sound),
– detrimental to RENAULT (unnecessary replacement of a sound or rechargeable battery),
– detrimental to the dealership (if the battery is tested as sound or rechargeable for a part return under warranty, the warranty reimbursement request will be cancelled).

PROCEDURE (on-vehicle test)

- Connect the tool directly to the battery terminals, without disconnecting the vehicle battery, as close as possible to the battery terminal but ensuring it is not after the fuse (on-vehicle test); **or** carry out the battery test after disconnecting the two terminals.
- check that the vehicle ignition is switched off,
- select the type of test **battery connected to vehicle** or **battery disconnected** using keys [△] and [▽]. Confirm using the green key [↵].
- The test is carried out to the **EN** standard by default. Confirm using the green key [↵].
- Select the starting power on the battery label using keys [△] and [▽].

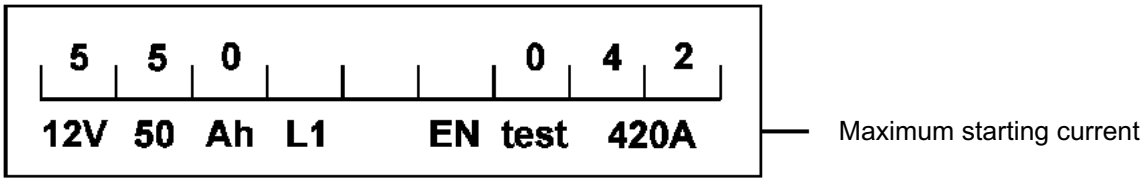

- Confirm using the green [↵] key.
- The tool displays **TEST IN PROGRESS**.
- The MIDTRONICS tool carries out the test and gives the results of the fault finding procedure.

Note:

To set the tool language, you need to:

- simultaneously press (before connecting the tool) keys [△] and [▽],
- connect the device to the battery,
- release the keys,
- scroll through the languages using keys [△] and [▽],
- confirm using the green key [↵].

RESULTS OF MEASUREMENT

1st results screen (example)

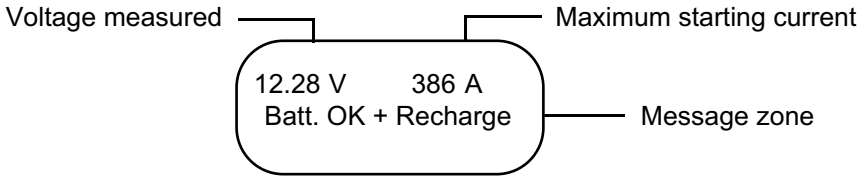

Confirm using the green key

2nd results screen (example)

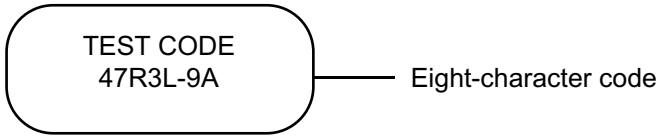

To stop the test, disconnect the tool.

Each code issued by the MIDTRONICS R330 tool is unique and varies according to:
– the type of battery,
– and its charge status.

IMPORTANT
The used vehicle pre-delivery battery check is complete after:
- the message ***BATTERY OK*** is displayed,
- the **MIDTRONICS R330** code corresponding to the ***BATTERY OK*** message is noted down on the used vehicle checklist.

REMINDER OF PRECAUTIONS BEFORE DISCONNECTING AND AFTER CONNECTING BATTERIES

(See Technical Note **3682A, 80A, Battery, Battery: Advice**)

CHARGING EQUIPMENT TO BE USED

Be sure to use a constant voltage charger included in the list of (specialist) equipment selected by RENAULT.

The charging voltage must be between **14.8 and 16 V** inclusive.

Whatever the battery type, the charge must be confirmed by a check with the **MIDTRONICS R330** tool (Elé. 1593).

NOTE
Be sure to disconnect the two battery terminals before beginning charging.
If the battery is not disconnected, the charging voltage indicated damages the electronic circuits.
When reconnecting the battery, be sure to observe the tightening torque specified in the Workshop Repair Manual.

CHARGING BATTERIES WITH OR WITHOUT A WARNING LIGHT

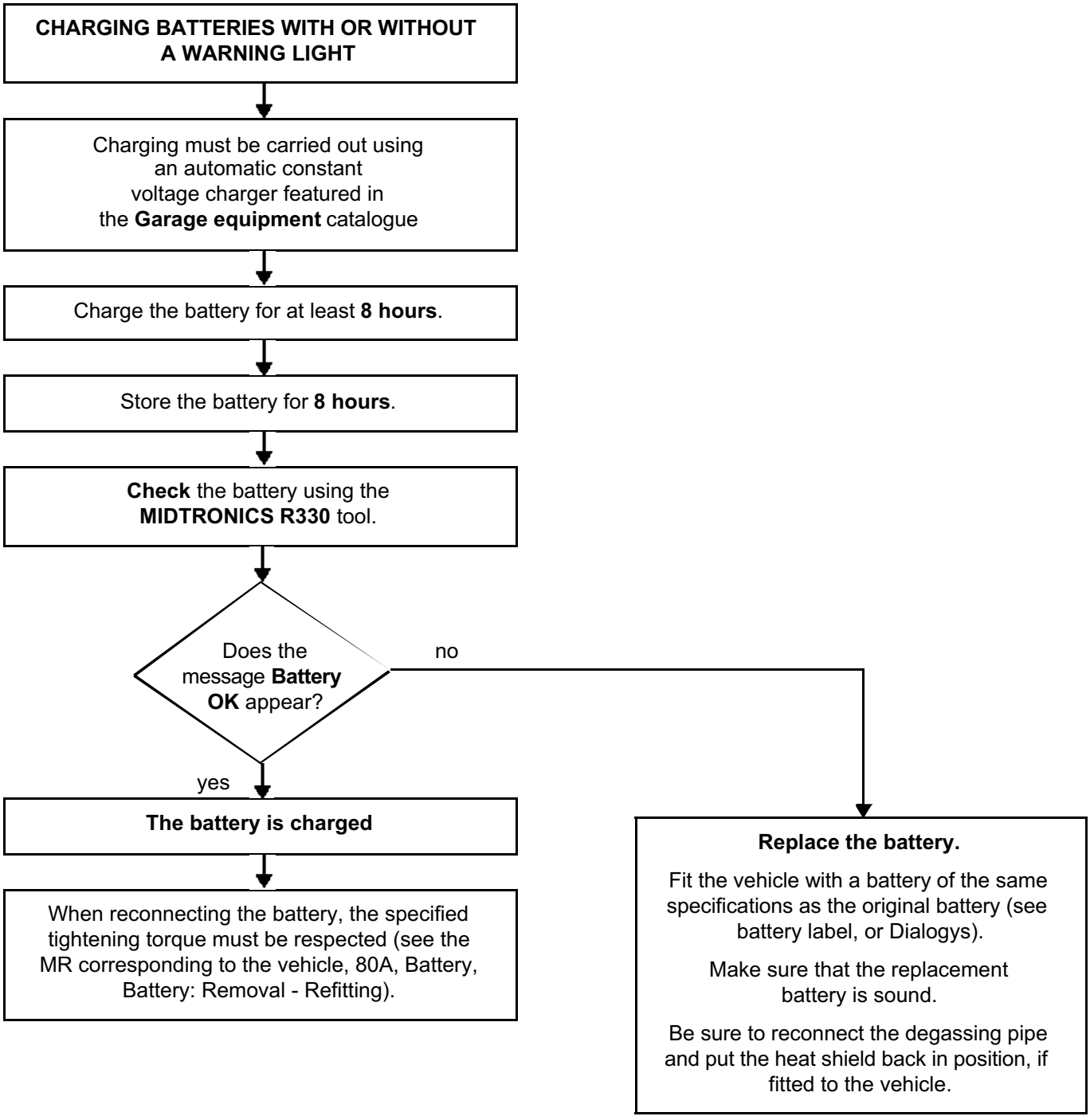

RENAULT

Technical Note6006A

KXX, and K9K

K9K engine

Engine workshop repair manual

Edition 2

77 11 328 422 MARCH 2004 Edition Anglaise

"The repair methods given by the manufacturer in this document are based on the technical specifications current when it was prepared.

The methods may be modified as a result of changes introduced by the manufacturer in the production of the various component units and accessories from which his vehicles are constructed."

All copyrights reserved by Renault.

The reproduction or translation in part of whole of the present document, as well as the use of the spare parts reference numbering system, are prohibited without the prior written consent of Renault.

© Renault s.a.s. 2006

K9K engine

Contents

Page

10A ENGINE AND LOWER ENGINE ASSEMBLY

Engine: Specifications 10A-1

Engine: Precautions for repair 10A-4

Engine: Parts and consumables for the repair work 10A-14

Upper engine: Tightening torque 10A-15

Lower engine: Tightening torque 10A-20

Diesel injection: Tightening torque 10A-23

Accessories belt: Tightening torque 10A-26

Upper engine: Specifications 10A-28

Engine peripherals: Specifications 10A-36

Standard replacement 10A-46

Special tooling 10A-47

Equipment 10A-65

Engine: Dismantling 10A-84

Accessories belt: Removal 10A-89

Timing - cylinder head: Removal 10A-90

Cylinder head: Dismantling 10A-113

Upper engine: Cleaning 10A-129

Upper engine: Checking 10A-135

Cylinder head: Refitting 10A-144

Cylinder block: Dismantling 10A-192

Running gear:Removal 10A-204

10A ENGINE AND LOWER ENGINE ASSEMBLY

Piston base cooling jet: Removal 10A-207

Lower engine: Cleaning 10A-209

Lower engine: Check 10A-211

Piston base cooling jet: Refitting 10A-224

Running gear Refitting 10A-227

Cylinder block: Refitting 10A-239

Timing - cylinder head: Refitting 10A-280

Accessories belt: Refitting 10A-326

Engine: Refitting 10A-329

Timing belt: Removal 10A-336

Timing belts: Refitting 10A-351

I - ENGINE IDENTIFICATION

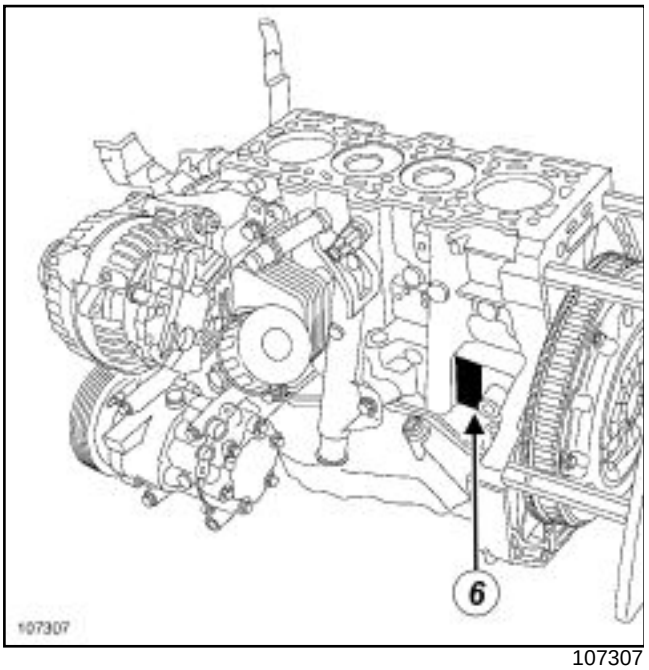

107307

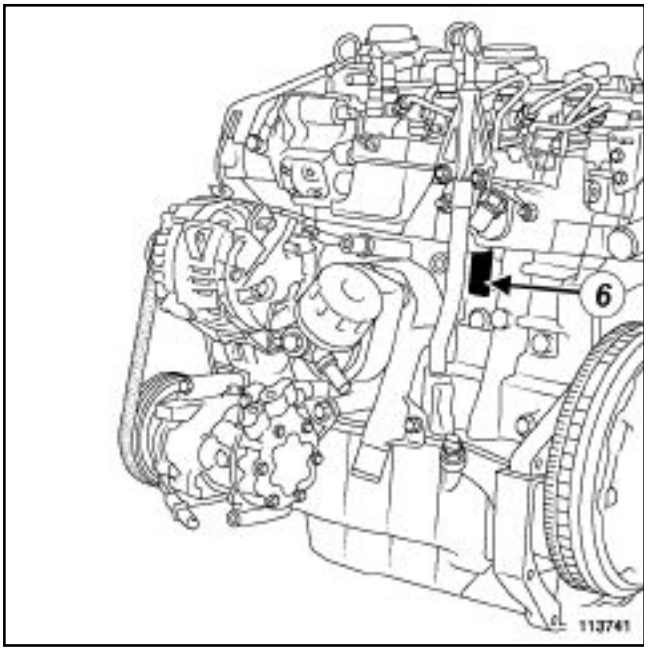

113741

The engine can be identified by markings (**6**) located on the cylinder block.

Details of markings

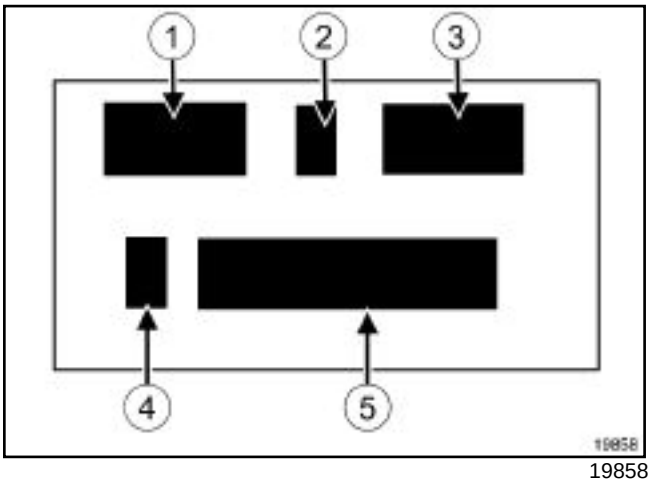

19858

The markings consist of:

- (**1**) : the engine type
- (**2**) : the engine approval letter
- (**3**) : the engine suffix
- (**4**) : the factory where the engine was fitted
- (**5**) : the engine production number

II - ENGINE SPECIFICATION TABLES

Vehicle	After-Sales Type:	Engine type	Engine suffix	Cubic capacity (cc)	Bore (mm)	Stroke (mm)	Compression ratio
Renault CLIO II	XB07 XB1W XB24	K9K	700	**1461**	**76**	**80.5**	**18.25:1**
	XB08		702				
	XB07		704				
	XB24		704				**17.9:1**
	XB23 XB2E		706				
	XB09		710				**18.25:1**
	XB2G		712				**17.9:1**
Renault KANGOO	XC07	K9K	700	**1461**	**76**	**80.5**	**18.25:1**
	XC08 XC1S		702				
	XC07 XC08		704				
	XC1R		704				**17.6: 1**
	XC09		710				**18.25:1**
	XC1E		714				**17.9:1**
	XC1F		716				
	XC1G		718				
Renault MEGANE II	XM0F	K9K	722	**1461**	**76**	**80.5**	**18.25:1**
	XM0T		722				**17.6:1**
	XM1F		724				**17.9:1**
	XM02		728, 729				**17.9:1**
	XM13		728				**17.6: 1**
	XM1E		732				**15.3:1**
Renault CLIO III	XR0H	K9K	764	**1461**	**76**	**80.5**	**15.3:1**
	XR0F		766				**17.9:1**
	XR0G		768				

Vehicle	After-Sales Type:	Engine type	Engine suffix	Cubic capa-city (cc)	Bore (mm)	Stroke (mm)	Com-pression ratio
Renault MODUS	XP0D	K9K	750	**1461**	**76**	**80.5**	**17.6: 1**
	XP08 XP0E		752				
	XP0F		760				**17.9:1**
	XP0G		762 ,768				
	XP0H		764				**15.3:1**
	XP0F		766				**17.9:1**
Renault DACIA	XS0J	K9K	790	**1461**	**76**	**80.5**	**17.9:1**
	XS0K		792				
Nissan ALMERA	-	K9K	260	**1461**	**76**	**80.5**	**18.25:1**
Nissan MICRA	-	K9K	270, 272, 274, 276	**1461**	**76**	**80.5**	**18.25:1**

Equipment required
offset thread repair kit

I - SAFETY

General information

All information contained in these manuals is intended exclusively for automotive industry professionals.

The documentation is intended to cover all vehicles in the **RENAULT** range throughout the world, but may not cover equipment designed for use in specific countries.

The methods and fault finding procedures recommended and described in this manual have been designed by automotive industry repair professionals.

a - General recommendations

Observe basic principles of vehicle repair.

The quality of repair depends first and foremost on the care exercised by the person in carrying it out.

To ensure good repair:

- use recommended professional products and original Renault parts,
- observe the tightening torques,
- replace the recommended roll pins, nuts or bolts, after each removal,
- clean and degrease the sections to be bonded, to ensure they bond correctly.

The design quality of our vehicles demands that nothing is left to chance in making a good repair, and it is essential to refit parts or components exactly as they were originally (for instance: heat shields, wiring routing, pipe routing).

Use professional products and apply them with care, for example do not apply too much sealant to the joint face.

b - Special tooling - ease of use

The repair procedures have been designed using special tools; they must therefore be carried out using these tools to ensure a high degree of working safety and quality of repair.

The equipment we have approved has undergone careful research and testing, and must be used and maintained with care.

c - Reliability - updating

Since component specifications are subject to change during their commercial life, it is essential to check whether there are any Technical Note updates when seeking information.

d - Safety

Certain devices and parts must be handled with particular attention to safety and cleanliness and, above all, with due care.

The safety symbol used in this manual indicates that special attention must be paid to the procedure or the tightening torque values.

WARNING
Do not use flammable products to clean parts.

Working safely:

- use appropriate tools which are in good condition (using «multipurpose» tools, such as adjustable pliers, should be avoided wherever possible),
- adopt a correct posture and technique when performing heavy work or lifting loads,
- check that the working area is clean and tidy during the operation,
- use personal protection (gloves, safety goggles, work shoes, masks, skin barrier creams, etc.),
- always follow the safety instructions associated with the operation to be performed,
- do not smoke when working on vehicles,
- do not use toxic products in unventilated rooms,
- do not ingest any chemicals (brake fluid, coolant, etc.).

Respecting the environment:

- sort waste according to its particular qualities,
- do not burn waste products (tyres, etc.).

e - Conclusion

The procedures contained in this document merit your attention. Please read them carefully in order to reduce the risk of injury, and avoid using incorrect procedures that could damage the vehicle or make it dangerous to use.

Following the recommended procedures will help you to provide a quality of service which will ensure the vehicles achieve the highest levels of performance and reliability.

Maintenance and repair operations must be carried out under the proper conditions to ensure that our vehicles run safely and reliably.

II - CLEANLINESS

Risks relating to contamination

The high-pressure direct injection system is highly sensitive to contamination. The risks caused by contamination are:

- damage to or destruction of the high-pressure injection system,
- a component seizing,
- a component not being properly sealed.

All After-Sales operations must be performed under very clean conditions. Having carried out an operation in good conditions means that no impurities (particles a few microns in size) have penetrated the system during dismantling.

The cleanliness principle must be applied from the filter to the injectors.

What are the sources of contamination?

- metal or plastic chips,
- paint,
- fibres:
  - cardboard,
  - brushes,
  - paper,
  - clothing,
  - cloth,
- foreign bodies such as hair,
- ambient atmosphere,
- etc.

WARNING
Cleaning the engine using a high-pressure washer is prohibited because of the risk of damaging connections. In addition, moisture may collect in the connectors and create electrical connection faults.

a - Cleaning cloths

Use lint free cleaning cloths (part number **77 11 211 707**).

The use of rags or ordinary paper towels is prohibited: these produce lint and lose fibres, which then contaminate the fuel circuit.

Each cloth must only be used once.

b - Blanking plugs

The blanking plugs are used to cap the fuel circuit once it is opened and to therefore prevent contaminants from entering.

A set of blanking plugs should be used once only and used plugs must be discarded after use: once used, the plugs are soiled and cleaning them is not sufficient to make them reusable.

Unused plugs must also be discarded and not used again for any other operation on an injection system.

Blanking plug kit part number:

- K9K (**DELPHI** injection): **77 01 206 804**
- K9K (**SIEMENS** injection): **77 01 476 857**

c - Protective bags

Use hermetically resealable plastic bags, using adhesive tape, for example, to store components which will be refitted and reused. Stored parts will therefore be less subject to the risk of contamination.

These bags must be used once only: once they have been used, they are to be discarded.

d - Cleaning products

Two cleaning products can be used:

- an aerosol spray brake cleaner (part number **77 11 226 128**).
- an injector cleaner (part number **77 11 224 188**),

To use the injector cleaner, be sure to have a clean brush in good condition (the brush must not lose any bristles) as well as a clean container which has no impurities in it.

Note:
Use a new injector cleaner each time work is carried out (a used cleaning agent will contain impurities).

III - GENERAL RECOMMENDATIONS

1 - Advice to be followed before any operation

1) Carry out the work in a clean working area and take care to protect removed components from dust using plastic bags which are hermetically resealable, for example.

2) Always order the following from the Parts Department before carrying out work:

- **a new blanking plug kit** ; these are specific to the engine
- a sufficient number of lint free **cleaning cloths** .
- one of the two **cleaning products** for fuel pipe unions,
- **the parts always to be replaced** after each removal operation mentioned in the operational procedures specific to the vehicle.

3) Wear safety goggles fitted with side shields to prevent the cleaning product from splashing the eyes.

4) Wear latex safety gloves to avoid prolonged contact with the skin.

> Note:
>
> If wearing leather protective gloves, cover these with latex gloves.

5) Before any operation on the injection system, using plastic bags or clean cloths, protect:

- the accessories and timing belts,
- the electrical accessories (starter, alternator, power-assisted steering pump, sensors and electrical connectors),
- the flywheel face.

2 - Instructions to be followed during the operation

Wash your hands before and while carrying out the work.

Change the latex safety gloves if they become soiled or damaged.

All components removed from the injection system must be stored in a hermetically sealed plastic bag once they have been capped.

Reseal the bag hermetically using adhesive tape, for example, even if the bag must be opened shortly afterwards: ambient air can be a source of pollution.

After opening the fuel circuit, the use of brushes, cleaning agents, air blow guns, rifle-type brushes or standard cloths is strictly prohibited: These items are likely to allow impurities to enter the system.

When replacing a component with a new one or when refitting it after storing it in a plastic bag, do not unpack it until it is time to fit it on the vehicle.

3 - Cleaning

There are currently two procedures for cleaning the fuel circuit before opening it in order to carry out work in the workshop.

These procedures enable the fuel circuit to be cleaned to prevent contamination from entering: they both have the same end result and neither is preferred over the other.

a - Using the injector cleaning agent

Clear the access to the unions that need opening, following the work procedures specific to the vehicle (see the relevant Workshop Repair Manual).

Protect sections which are sensitive to fuel leaks.

Pour the injector cleaning agent into a container which is free from impurities.

> **IMPORTANT**
>
> Wear latex safety gloves when using the cleaning agent.

Dip a clean brush, which is not shedding bristles, into the container of injector cleaning agent.

> **IMPORTANT**
>
> Wear safety goggles fitted with side shields during this operation.

Clean the unions carefully using the brush and the injector cleaning agent.

Blast the components that have been cleaned with compressed air (tools, workbench, and also parts, unions and around the injection system). Make sure there are no brush bristles remaining and that the area is clean.

Wipe the sections that were cleaned with fresh cleaning cloths.

Open the circuit at the unions and immediately fit the relevant blanking plugs.

WARNING

Do not blast with compressed air once the fuel circuit is open, otherwise impurities may enter the system. Use cleaning cloths only, if necessary.

b - Using the brake cleaning agent

Clear the access to the unions that need opening, following the work procedures specific to the vehicle (see the relevant Workshop Repair Manual).

Protect sections which are sensitive to fuel leaks.

IMPORTANT

Wear latex safety gloves when using the cleaning agent.

IMPORTANT

Wear safety goggles fitted with side shields during this operation.

Spray the brake cleaning agent onto the unions to be opened.

Clean the unions carefully using fresh cleaning cloths.

Blast the components that have been cleaned with compressed air (tools, workbench, and also parts, unions and around the injection system). Make sure there are no brush bristles remaining and that the area is clean.

Open the circuit at the unions and immediately fit the relevant blanking plugs.

WARNING

Do not blast with compressed air once the fuel circuit is open, otherwise impurities may enter the system. Use cleaning cloths only, if necessary.

4 - Instructions for fitting the plugs

K9K, and 732 or 764

Part no. 77 01 476 857

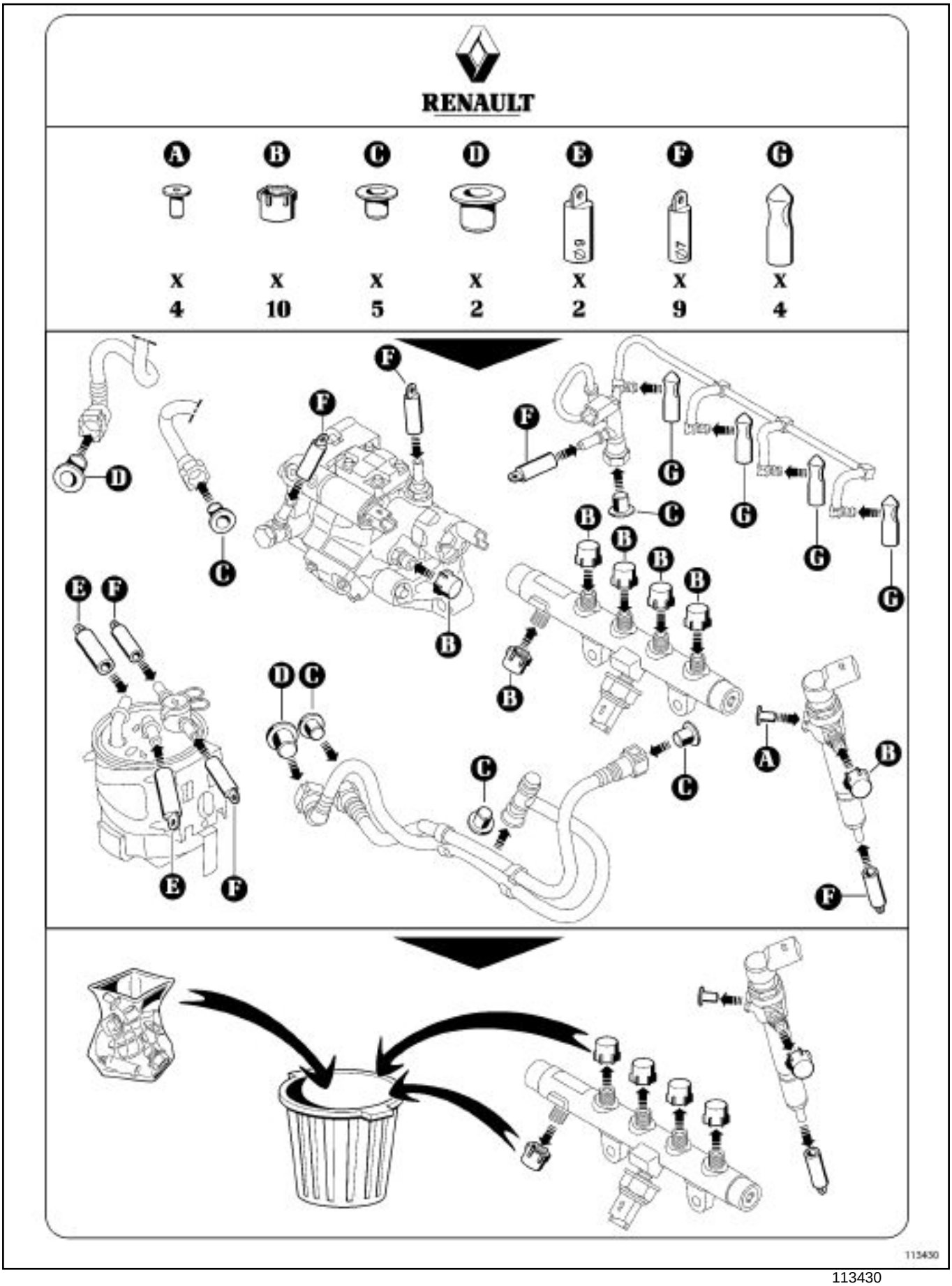

113430

K9K, and 260 or 270 or 272 or 700 or 702 or 704 or 706 or 710 or 712 or 714 or 716 or 718 or 722 or 724 or 728 or 729 or 750 or 752 or 760 or 762 or 766 or 768 or 790

Part no. 77 01 206 804

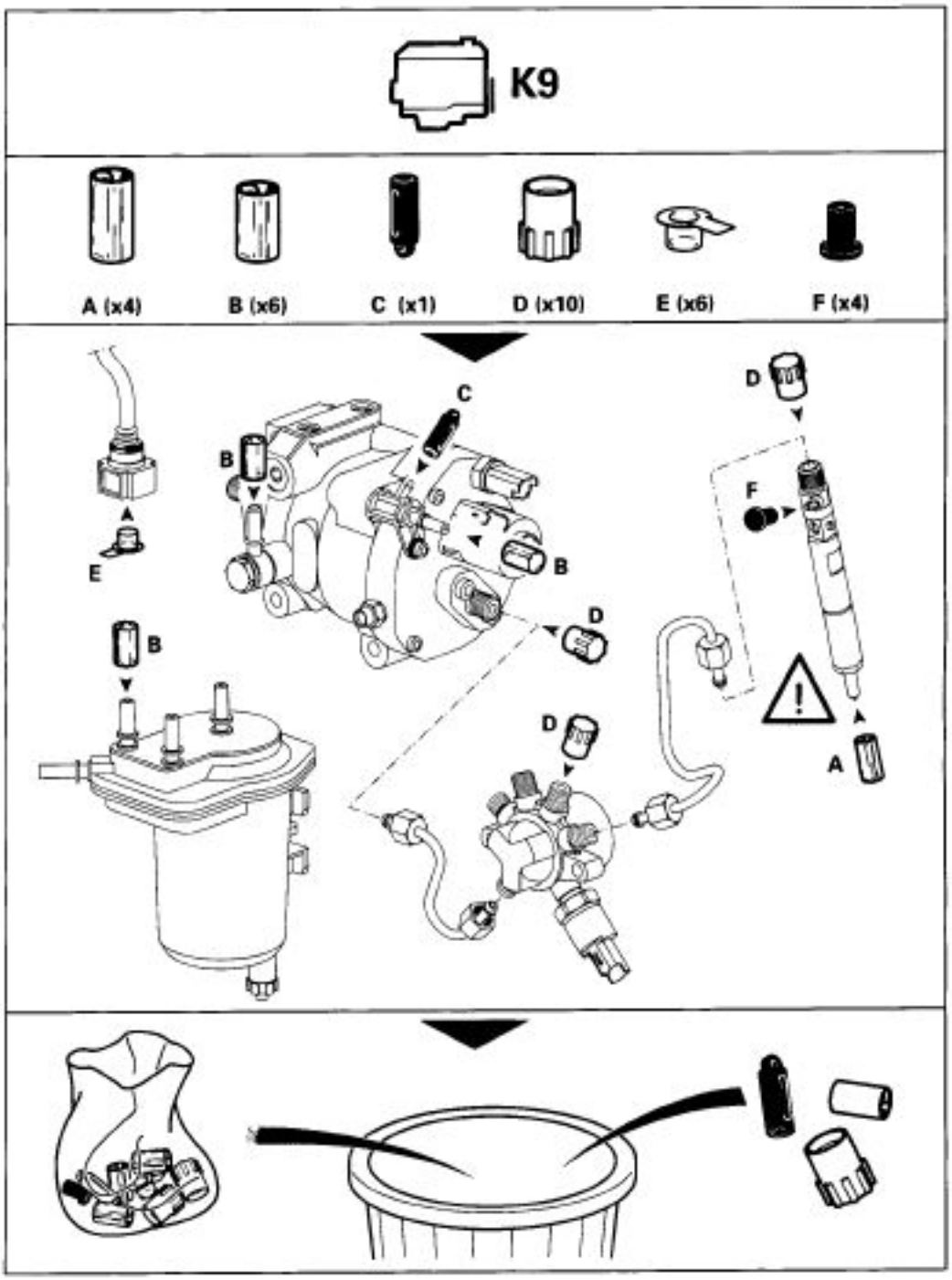

20977

5 - Engine cleaning

Protect the various accessories to prevent water and cleaning products splashing on them.

Do not allow water to enter the inlet pipes.

6 - Cleaning the engine parts

WARNING

When cleaning parts, it is essential to not knock the parts against each other, or their mating faces may be damaged and therefore their adjustments may be altered, which could damage the engine.

7 - Fitting relieved threads

The tapped holes of all parts including the engine (except the rocker cover) may be repaired using the **offset thread repair kit** .

I - PARTS ALWAYS TO BE REPLACED AFTER REPAIRING THE ENGINE

- All seals
- The oil filter
- The copper washers on the injector holders,
- The high pressure injection pipes,
- The pipe plugs,
- The valve guides
- The valve stem seals
- The cooling jets at the bottom of the piston
- The engine flywheel bolts
- The crankshaft bearing cap bolts
- The con rod cap bolts
- The camshaft pulley nut
- The tensioning rollers and pulleys for the accessories and timing belts
- The bolts for the accessories belt mechanical tensioning roller
- The accessories and timing belts
- The crankshaft accessories pulley bolt
- The cooling circuit hoses if they are damaged
- The thermostat
- The turbocharger plastic pipes.

II - CONSUMABLES

Type	Quantity	Component concerned	Part no.
DÉCAPJOINT	Coat	The joint faces	**77 01 405 952**
SILICONE ADHESIVE SEAL	Bead	Crankshaft bearing cap no. 1 Cylinder block-sump connection	**77 11 227 484**
LOCTITE 518	Bead	Camshaft bearing caps no. 1 and no. 6	**77 01 421 162**
"VARYBOND 12-71" HIGH STRENGTH THREADLOCK	1 - 2 drops	Coolant pump bolts	**77 11 230 112**
DEGREASER	Coat	The joint faces	**77 11 224 559**
CLEANING CLOTHS	-	Injection circuit	**77 11 211 707**
SET OF BLANKING PLUGS	-	Injection system **DELPHI**	**77 01 206 804**
SET OF BLANKING PLUGS	-	Injection system **SIEMENS**	**77 01 476 857**
INJECTOR CLEANING PRODUCT	Coat	Injection system	**77 11 224 188**
BRAKE CLEANER	Coat	Injection system	**77 11 226 128**
GREY SCUFF PAD	-	The joint faces	**77 01 405 943**

UPPER ENGINE

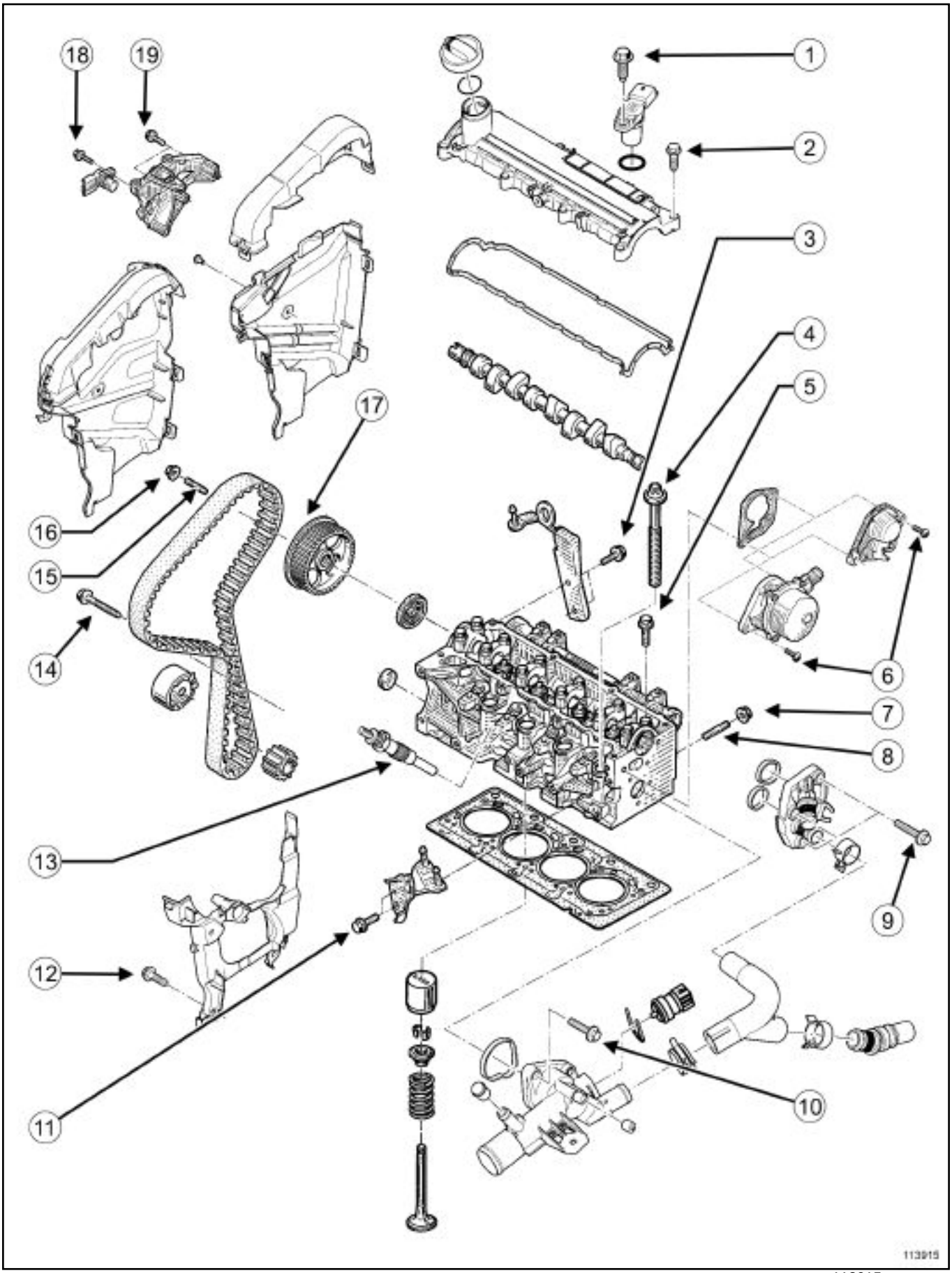

113915

|

Tightening torques in Nm and/or in degrees		
(**1**)	cylinder marking sensor bolt	**8 ± 0.8**
(**2**)	Rocker cover bolts	**12 ± 1.2**
(**3**)	Lifting eye bolts (timing end)	Bolt H M8x125-16 **21 ± 2.1** Bolt H M6x100-23 **10 ± 1**
(**4**)	Cylinder head bolts	**25 ± 2.5 + 255°± 10°**
(**5**)	Camshaft bearing cap bolts	**11 ± 1.1**
(**6**)	Vacuum pump bolt	**21 ± 2.1**
(**7**)	Exhaust manifold nut	**26 ± 2.6**
(**8**)	Exhaust manifold stud	**8 ± 0.8**
(**9**)	EGR cooler cover bolt	**12 ± 1.2**
(**10**)	Cylinder head coolant pipe housing outlet bolt	**11 ± 1.1**
(**11**)	Engine lifting eye bolts (flywheel end)	**13 ± 1.3**
(**12**)	Inner timing cover bolt	**9 ± 0.9**
(**13**)	Heater plug	**15 ± 1.5**
(**14**)	Timing tension wheel bolt	**27 ± 2.7**
(**15**)	Camshaft pulley stud	**10 ± 1 at 14 ± 1.4**
(**16**)	Camshaft pulley nut	**30 ± 3 + 86°± 6°**
(**17**)	Camshaft pulley ring gear bolt	**14 ± 1.4**
(**18**)	Cylinder marking sensor bolt	**8 ± 0.8**
(**19**)	Cylinder head suspended mounting bolt	**25 ± 2.5**

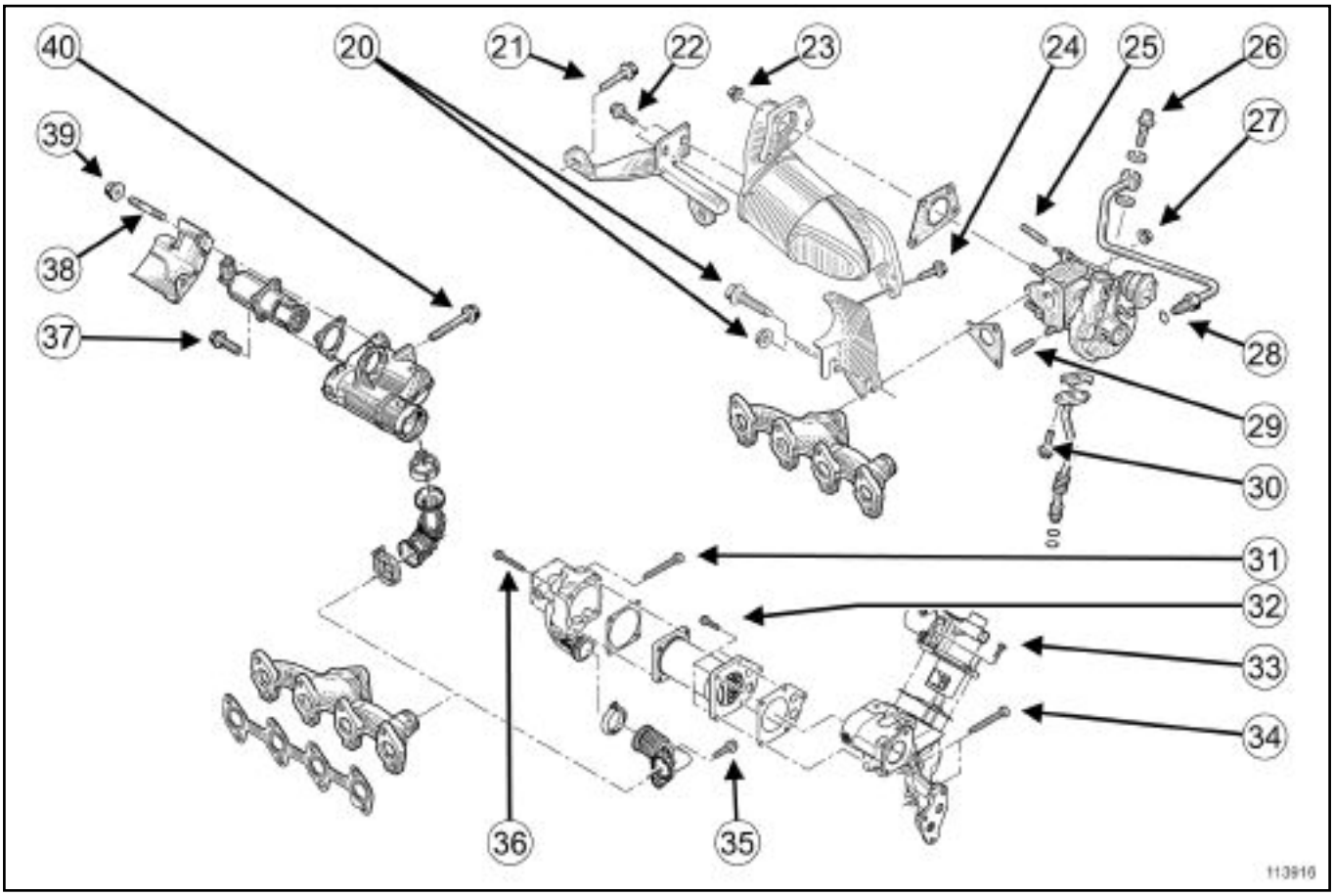

113916

Couple de serrage en N.m et / ou degrés		
(**20**)	Downstream catalytic converter stay nut and bolt (gearbox side)	**21 ± 2.1**
(**21**)	Upstream catalytic converter stay bolt (engine side)	**44 ± 4.4**
(**22**)	Upstream stay bolt on the catalytic converter	**26 ± 2.6**
(**23**)	Catalytic converter-turbocharger nut	**26 ± 2.6**
(**24**)	Downstream stay bolt on the catalytic converter	**21 ± 2.1**
(**25**)	Turbocharger stud	**9 ± 0.9**
(**26**)	Turbocharger oil supply pipe bolt on the turbocharger.	**23 ± 2.3**
(**27**)	Turbocharger nut on the manifold	**26 ± 2.6**
(**28**)	Turbocharger oil supply pipe bolt on the cylinder head	**Collar** nut to **35 ± 3.5 (without high strength threadlock)** **Collarless** nuts to **23 ± 2.3 (with high strength threadlock)**
(**29**)	Turbocharger stud	**9 ± 0.9**

Couple de serrage en N.m et / ou degrés		
(**30**)	Turbocharger oil retum pipe bolt	**12 ± 1.2**
(**31**)	Timing end cooler support bolt	**25 ± 2.5**
(**32**)	Exhaust gas cooler bolt	**12 ± 1.2**
(**33**)	EGR solenoid valve bolt	**10 ± 1**
(**34**)	Flywheel end cooler support bolt	**25 ± 2.5**
(**35**)	Exhaust gas inlet pipe bolts	**35 ± 3.5**
(**36**)	Timing end cooler support bolt	**12 ± 1.2**
(**37**)	Exhaust gas recirculation solenoid valve bolt	**12 ± 1.2**
(**38**)	Exhaust gas recirculation solenoid valve stud	**4 ± 0.4**
(**39**)	Exhaust gas recirculation solenoid valve nut	**12 ± 1.2**
(**40**)	Solenoid valve support bolts	**21 ± 2.1**

LOWER ENGINE:

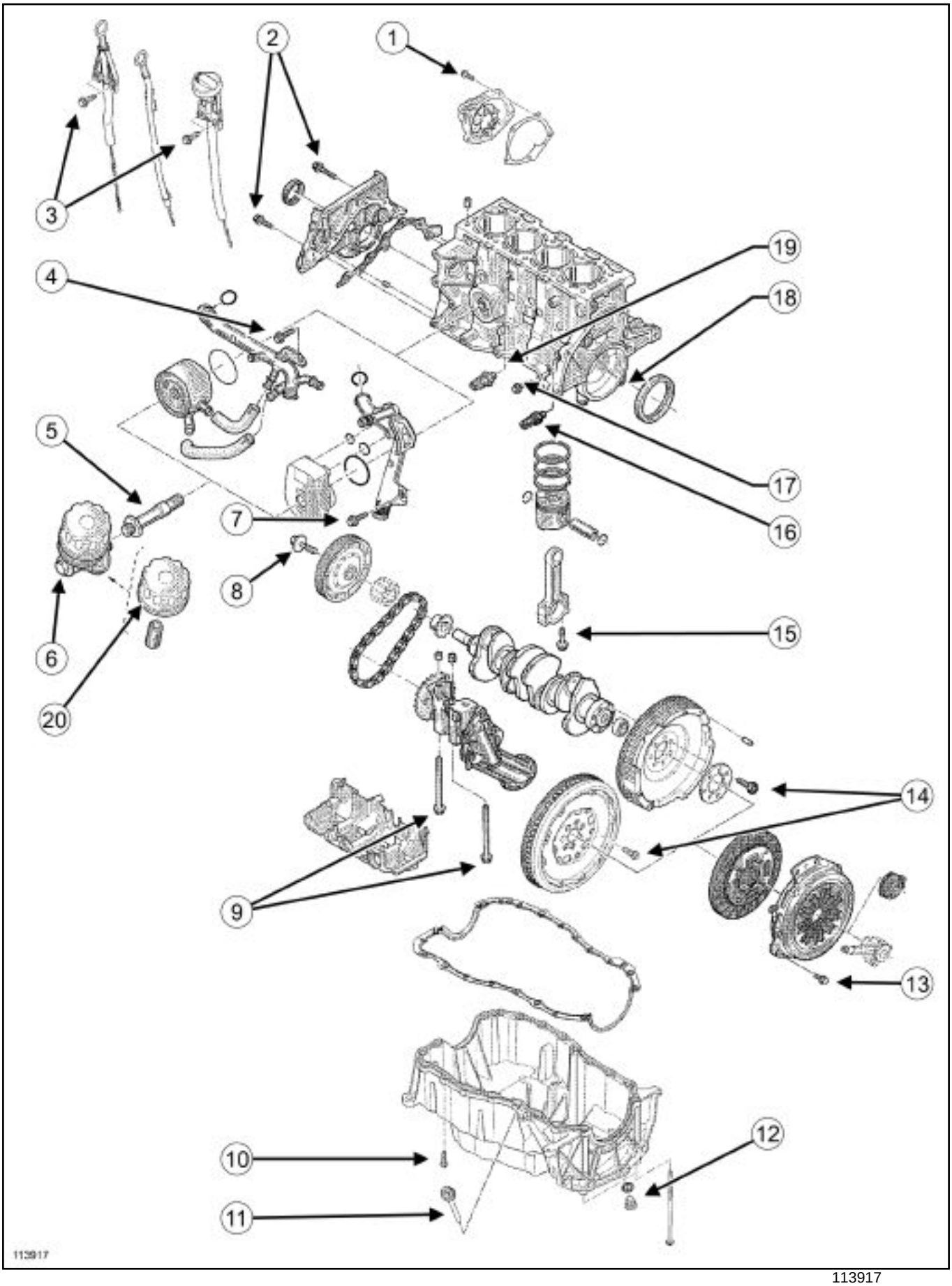

113917

|

Couple de serrage en N.m et / ou degrés		
(**1**)	coolant pump bolts	**11 ± 1.1**
(**2**)	Crankshaft cover bolts	**11 ± 1.1**
(**3**)	Dipstick guide tube bolts	**10 ± 1**
(**4**)	Coolant pump inlet pipe bolts	**22 ± 2.2**
(**5**)	The water-coolant heat exchanger union	**45 ± 4.5**
(**6**)	Oil filter bracket bolt	**45 ± 4.5**
(**7**)	Coolant pump inlet pipe bolts	**22 ± 2.2**
(**8**)	Crankshaft accessories pulley bolt	Bolt M12: **60 ± 6 +100° ± 10°** Bolt M14: **120 ± 12 + 95° ± 15°**
(**9**)	Oil pump bolts	**25 ± 2.5**
(**10**)	Oil sump bolts	**14 ± 1.4**
(**11**)	Oil level sensor	**25 ± 2.5**
(**12**)	Drain plug	**20 ± 4**
(**13**)	Clutch pressure plate bolts	Bolt H M7x100-16: **20 ± 2** Bolt CBLX M6x100-18: **14 ± 1.4**
(**14**)	Flywheel bolts Dual-mass flywheel bolts	**55 ± 5.5** **20 ± 2 + 36°± 6°**
(**15**)	Con rod cap bolt	**20 ± 2 + 45°± 6°**
(**16**)	Oil pressure switch	**30 ± 3 to 35 ± 3.5**
(**17**)	TDC pin plug	**20 ± 2**
(**18**)	Crankshaft bearing cap bolts	**25 ± 2.5 + 47° ± 6°**
(**19**)	Accelerometer	**20 ± 2**
(**20**)	Oil filter	**14 ± 2**

INJECTION SYSTEM

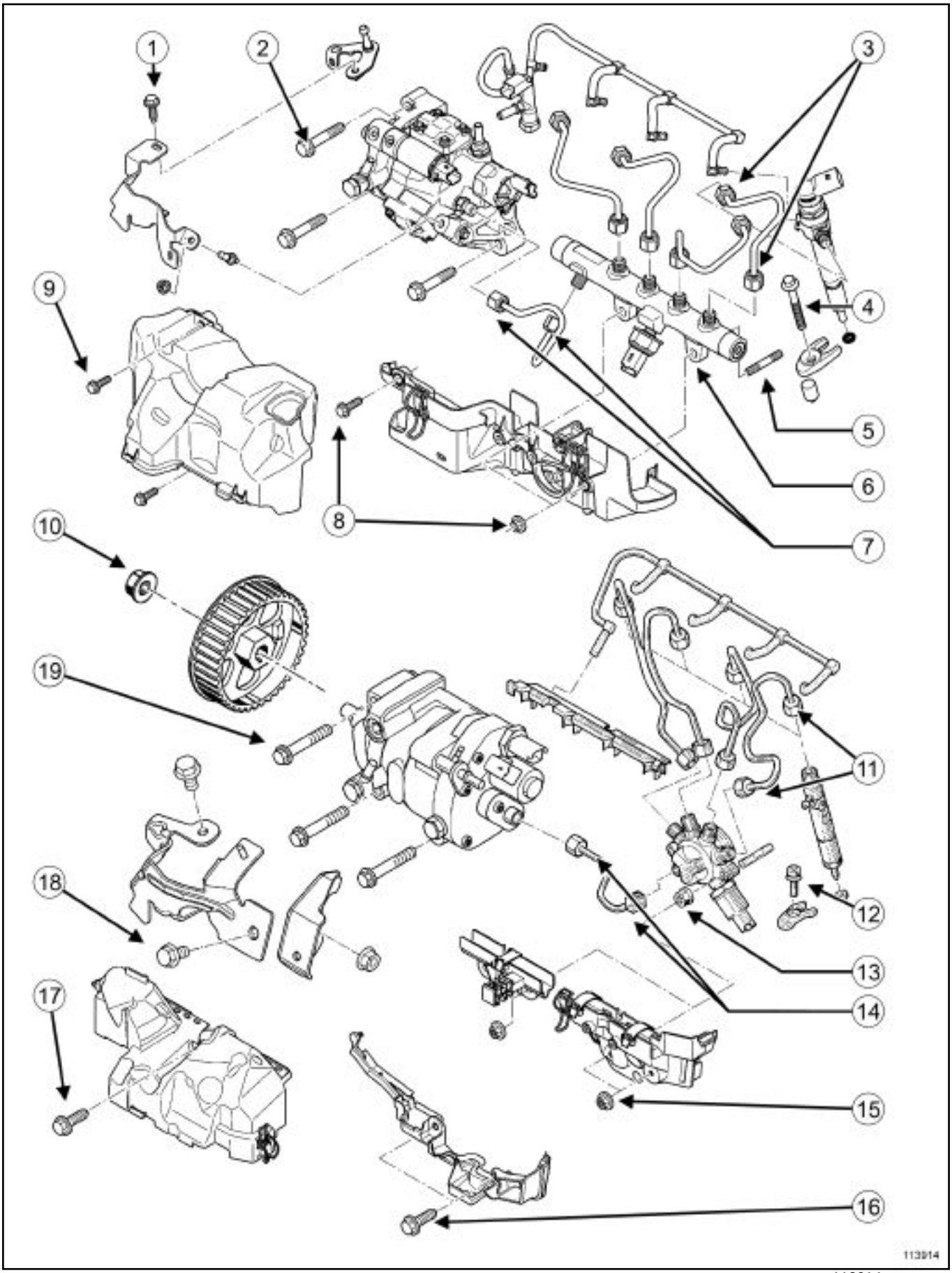

113914

Tightening torque in Nm and/or degrees		
(**1**)	High pressure guard mounting nut and bolt	**10 ± 1**
(**2**)	High pressure pump bolt	**21 ± 2.1**
(**3**)	Rail-injector high pressure pipe nuts	**See insert**
(**4**)	Injector bracket bolt	**30 ± 3**
(**5**)	High pressure rail stud	**8 ± 0.8**
(**6**)	High pressure rail nut	**28 ± 2.8**
(**7**)	High pressure pump-rail high pressure pipe	**See insert**
(**8**)	Lower high pressure guard nut and bolt	**21 ± 2.1**
(**9**)	High pressure guard cover bolt	**10 ± 1**
(**10**)	High pressure pump sprocket nut	**55 ± 5.5**
(**11**)	Rail-injector high pressure pipe nuts	**24 ± 2.4**
(**12**)	Injector bracket bolt	**28 ± 2.8**
(**13**)	High pressure rail nut	**28± 2.8**
(**14**)	High pressure pump-rail high pressure pipe	**24 ± 2.4**
(**15**)	Lower high pressure guard and hose bracket nuts	**21 ± 2.1**
(**16**)	Lower high pressure guard bolts	**10 ± 1**
(**17**)	High pressure guard cover bolt	**10 ± 1**
(**18**)	High pressure guard bracket bolts	**10 ± 1**
(**19**)	High pressure pump bolts	**21 ± 2.1**

WARNING

Tighten to a torque of **38 ± 3.8 Nm** the pump-rail and rail-injector high pressure pipes, part numbers:

- **77 01 207 025** ,
- **77 01 207 026** ,
- **77 01 207 027** ,
- **77 01 207 028** .

For high pressure pipes with different part numbers, tighten to a torque of **24 ± 2.4 Nm** .

I - ACCESSORIES PANEL ON VEHICLES WITHOUT AIR CONDITIONING

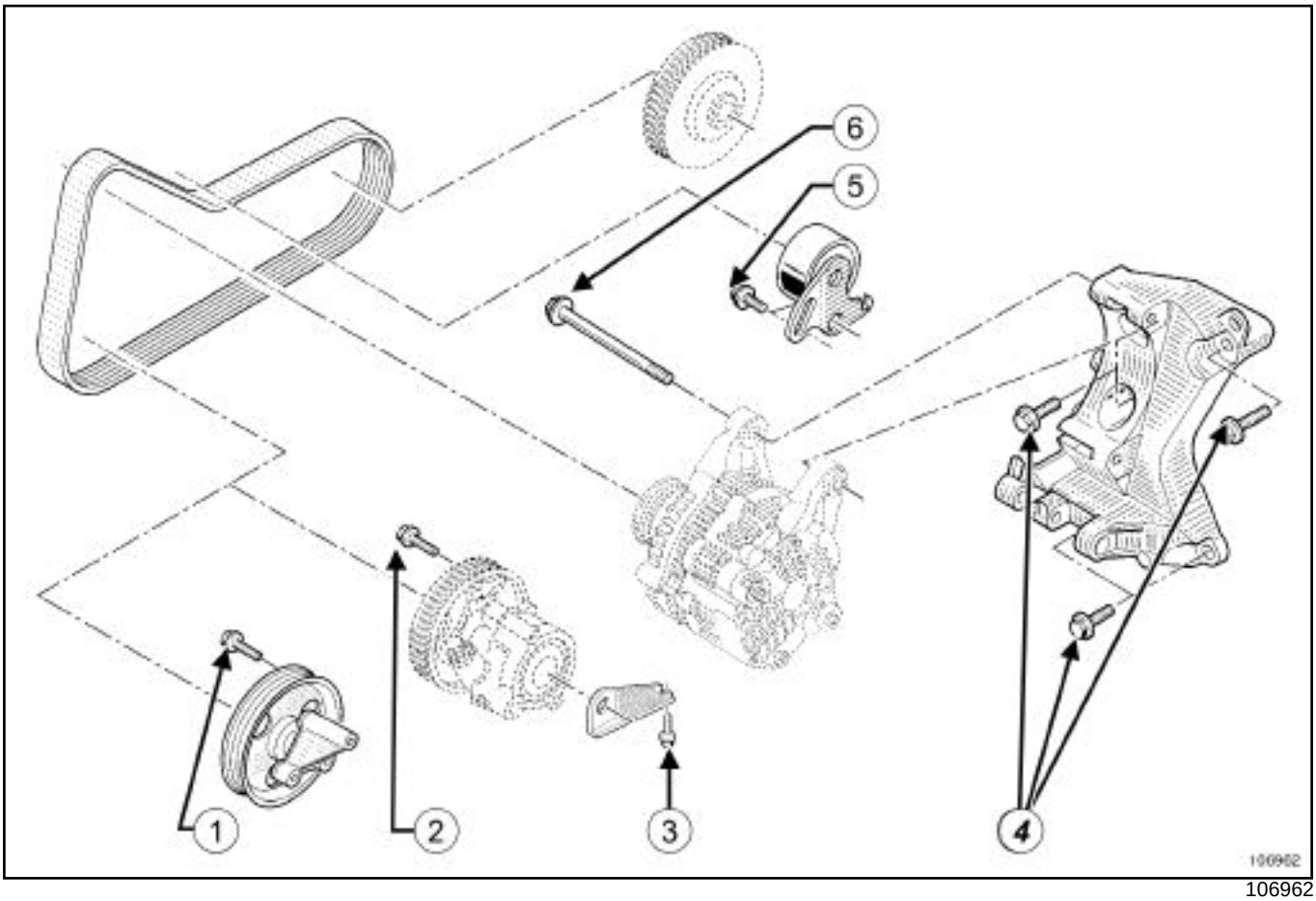

106962

Tightening torque in Nm and/or degrees		
(**1**)	Pulley bolt	**21 ± 2.1**
(**2**)	Power-assisted steering pump bolt	**21 ± 2.1**
(**3**)	Power-assisted steering pump stay bolt	**21 ± 2.1**
(**4**)	Multifunction support bolts	**44 ± 4.4**
(**5**)	Tensioning roller bolts	**35 ± 3.5**
(**6**)	Alternator bolt	**21 ± 2.1**

II - ACCESSORIES PANEL ON VEHICLES WITH AIR CONDITIONING

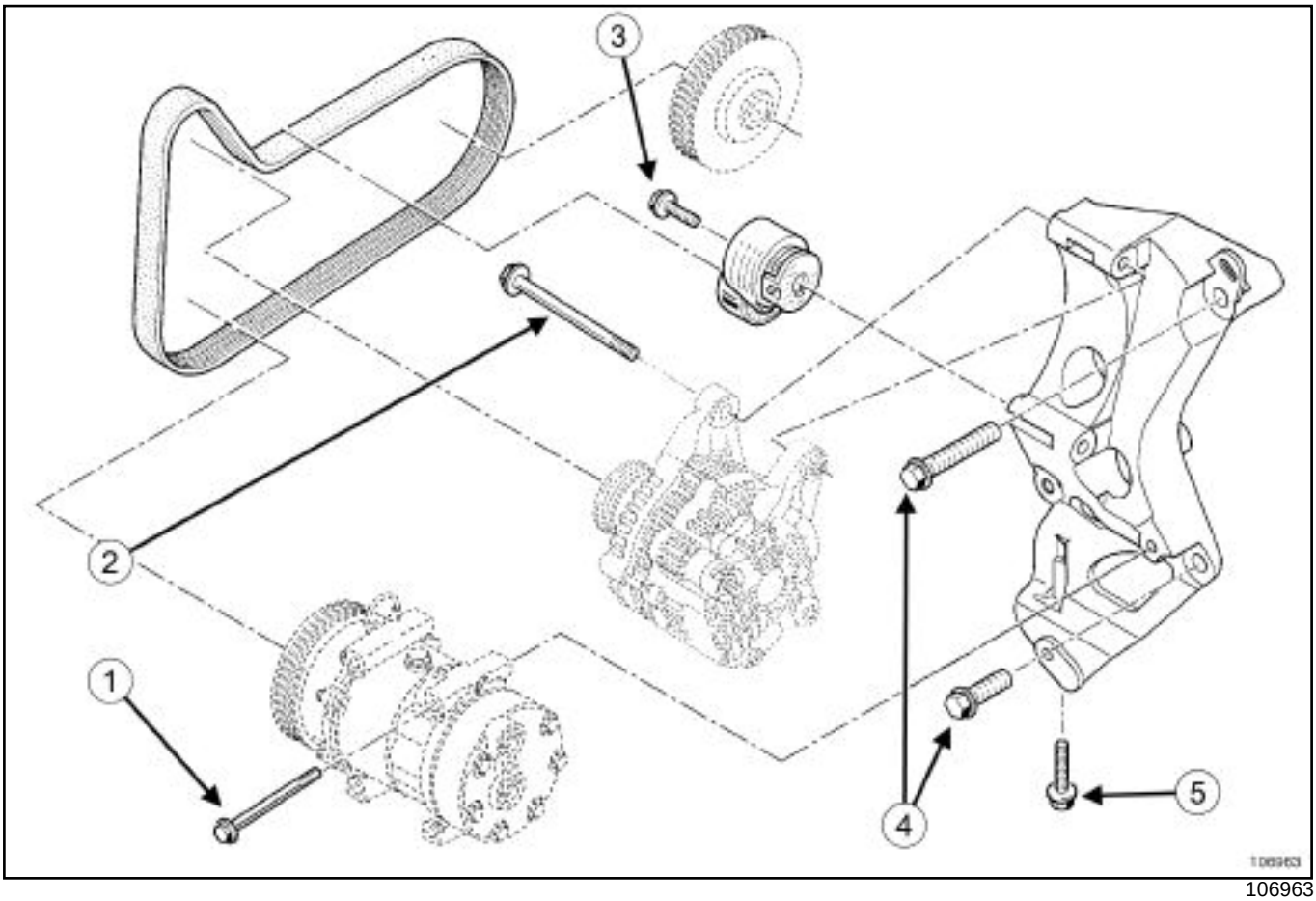

106963

Tightening torque in Nm and/or degrees		
(**1**)	Air conditioning compressor bolt	**21 ± 2.1**
(**2**)	Alternator bolts	**21 ± 2.1**
(**3**)	Auto tensioner bolts	**40 ± 4**
(**4**)	Multifunction support bolts	**44 ± 4.4**
(**5**)	Multifunction support lower bolt	**21 ± 2.1**

I - POSITION OF THE CYLINDERS

Cylinder **no. 1** is at the flywheel end.

II - INJECTION SEQUENCE

The injection sequence is **1-3-4-2** .

III - HEATER PLUG

Type of plug	Resistance
BERU	**0.6 Ω**
CHAMPION	

IV - CYLINDER HEAD GASKET

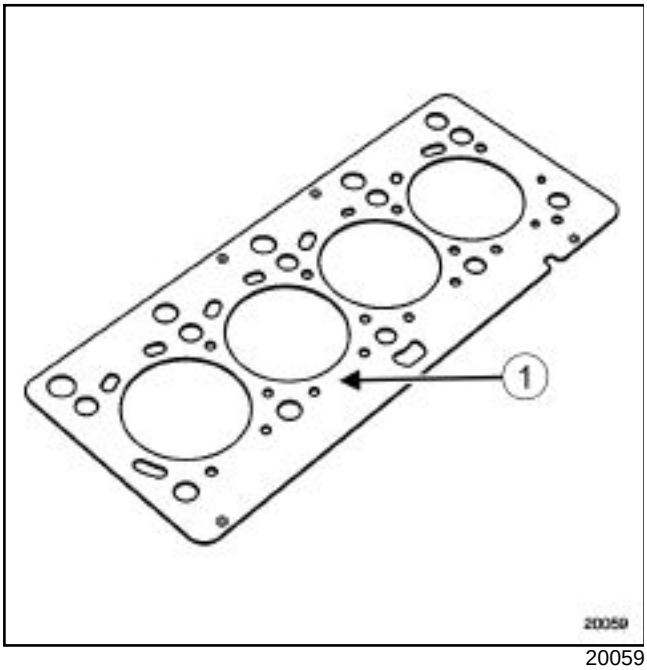

20059

The thickness of the cylinder head gasket is measured at (**1**) .

Engine type	Thickness of the cylinder head gasket in mm
K9K 260-270-272 K9K 700-702-704-710 **up until 19/05/2004** . K9K 722 **up until 16/07/2004** .	**0.68 ± 0.03**
K9K 700-702-704-710 **from 19/05/2004** . K9K 722 **from 16/07/2004** . K9K 274-276-706-712-714-716-718-724-728-729-732-750-752-760-762-764-766--768-790-792	**0.71 ± 0.03**

V - CYLINDER HEAD

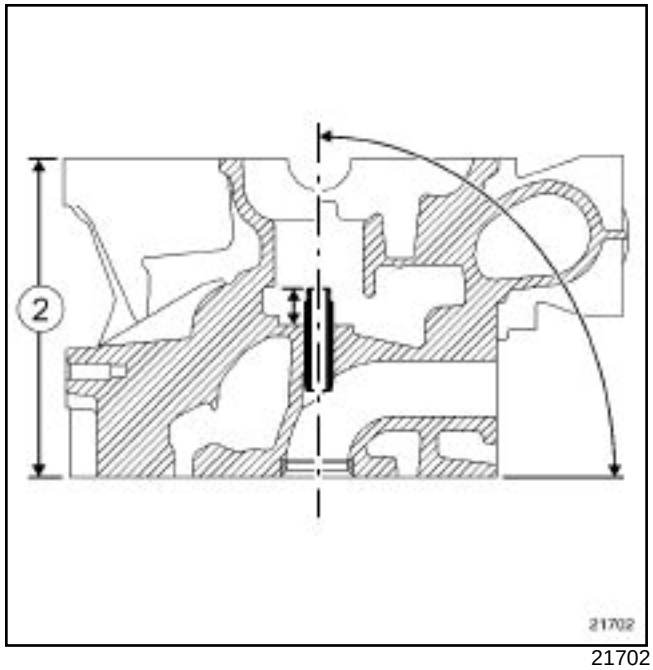

21702

1 - Cylinder head height

The cylinder head height ***(2)*** is **127mm** .

2 - Cylinder head gasket face bow

The maximum cylinder head gasket face bow is **0.05mm** .

3 - Cylinder block gasket face bow

The maximum cylinder block gasket face bow is **0.03mm** .

4 - Cylinder head testing

Test the cylinder head for possible cracks using the **cylinder head test kit** .

5 - Cylinder head regrinding

WARNING
No regrinding is permitted.

VI - TAPPET

1 - Tappet type

The tappet is the monobloc type.

2 - Outer diameter of tappet

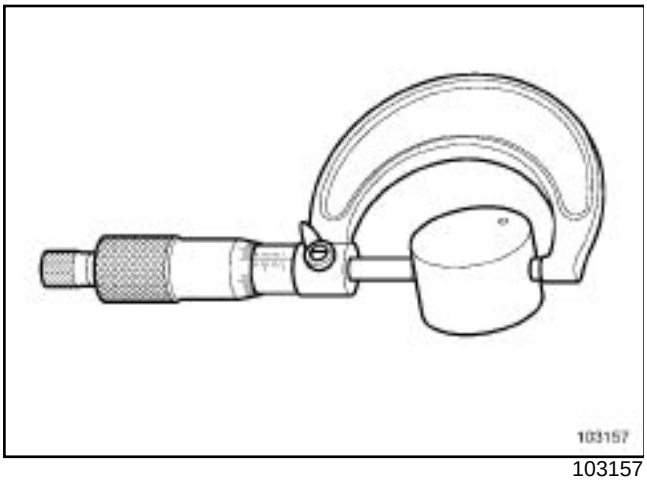

103157

The outer diameter of the tappet is **34.975 ± 0.01mm** .

3 - Diameter of the tappet housing in the cylinder head

The diameter of the tappet housing in the cylinder head is **35.02 ± 0.02mm**

4 - Clearance between the tappet and its housing

The clearance between the tappet and its housing is between **0.015 and 0.075mm** .

VII - ADJUSTING VALVE CLEARANCES

Valves	Cold valve clearance in mm
Inlet	**0.20 + 0.05 / - 0.075**
Exhaust	**0.40 + 0.05 / - 0.075**

VIII - VALVES

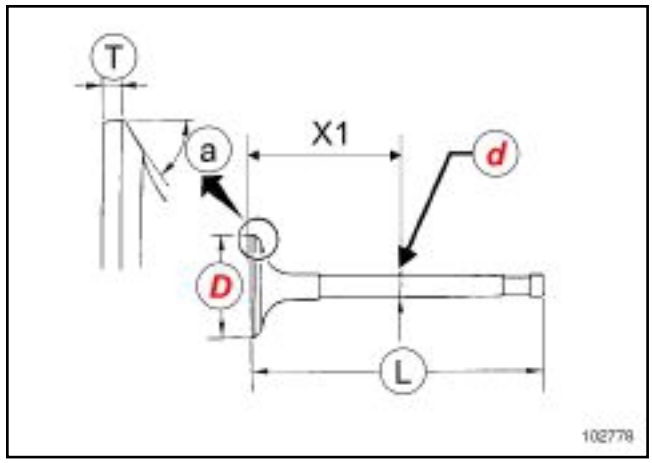

102778

	Inlet valve	Exhaust valve
Diameter ***(D)*** of the valve stem is measured at point ***(X1)***	***(D)*** = **5.977 ± 0.008mm** at ***(X1)*** = **41mm** .	***(D)*** = **5.963 ± 0.008mm** at ***(X1)*** = **31mm** .
Diameter ***(D)*** of the valve face	**33.5 ± 0.12mm**	**29 ± 0.12mm**
Thickness ***(T)*** of the valve head	**1mm**	**1mm**
Length ***(L)*** of the valve	**100.95 ± 0.21mm**	**100.75 ± 0.21mm**
Valve seat angle ***(A)***	**90°**	**90°**
Valve lift	**8mm**	**8.6mm**

IX - VALVE SEATS

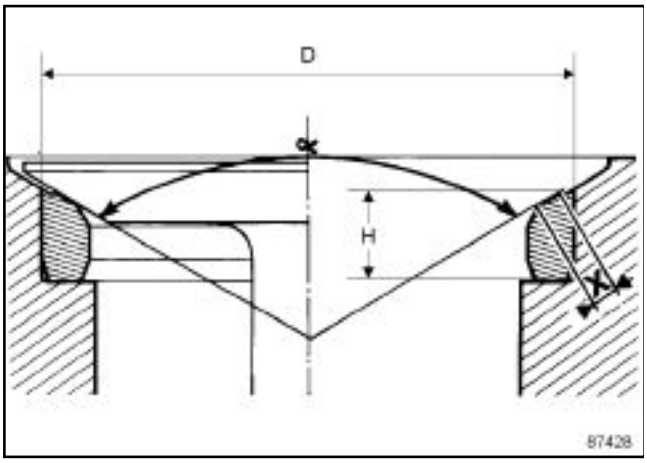

87428

	Inlet valve seat	Exhaust valve seat
Internal diameter of the valve seat housing (**D**) in the cylinder head	**34.459 ± 0.015mm**	**29.97 ± 0.015mm**
Outer diameter (**D**) of the valve seat	**34.542 ± 0.008mm**	**30.042 + 0.006 / - 0.007mm**
Valve seat housing depth (**H**) in the cylinder head	**6mm**	**7mm**
Valve seat height (**H**)	**4.65 ± 0.04mm**	**5.67 ± 0.04mm**
Width of mating faces X	**1.8mm**	**1.8mm**
Angle α of the valve seat	**89°30'**	**89°30'**

X - VALVE GUIDES

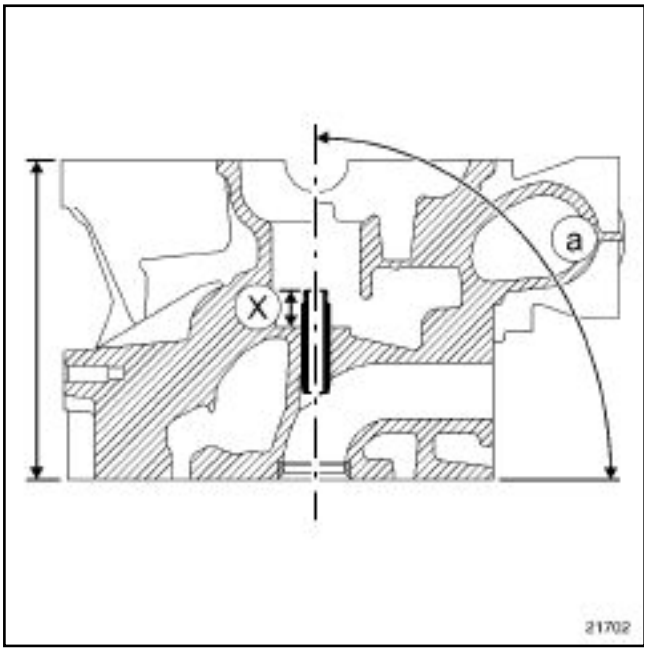

21702

	Inlet guide	Exhaust guide
Length of the valve guide	**40.5 ± 0.15mm**	
External diameter of guide:	**11 + 0.062 / + 0.044mm**	
Diameter of the guide housing in the cylinder head:	**11mm**	
Internal diameter of the valve guide Non machined Machined *	**5 + 0.12 / 0mm** **6.009 ± 0.009mm**	
Valve guide angle of inclination (**A**)	**90°**	
Valve guide position (**X**)	**14mm**	**14.2mm**
Clearance between the valve guide and the valve	**0.02 to 0.05mm**	**0.03 to 0.063mm**

*** This dimension is measured with the guide fitted in the cylinder head.**

XI - VALVE STEM SEALS

The inlet and exhaust guides have valve stem seals.

These must be replaced each time the valves are removed.

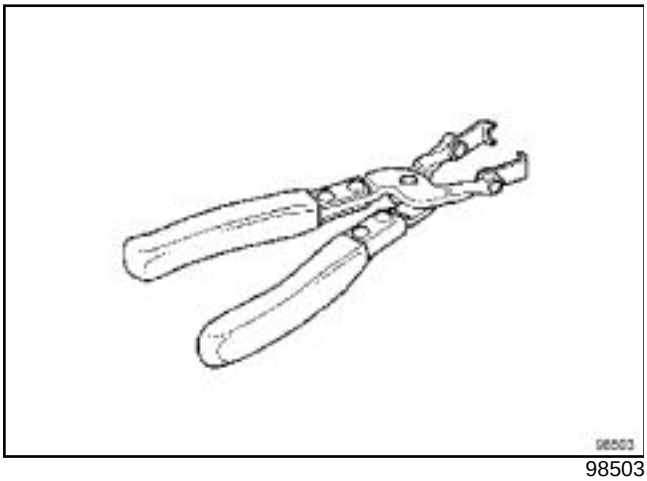

98503

The removal of the valve stem seals is carried out using (**Mot. 1335**).

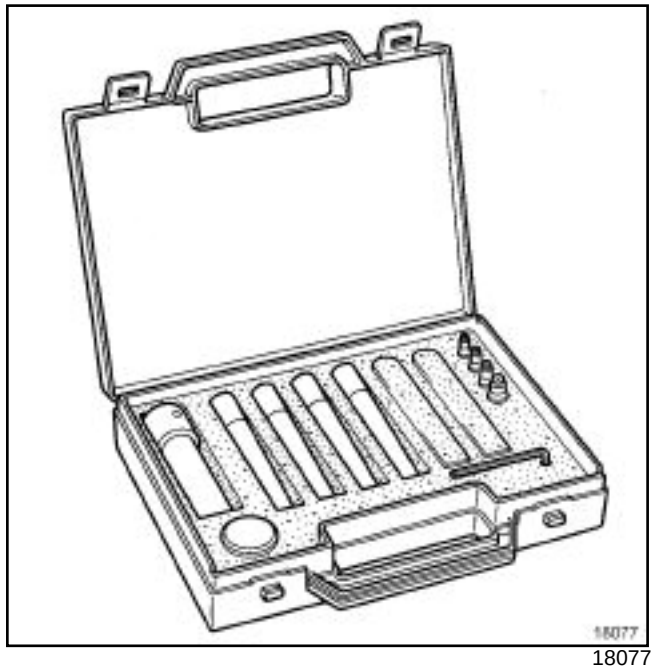

18077

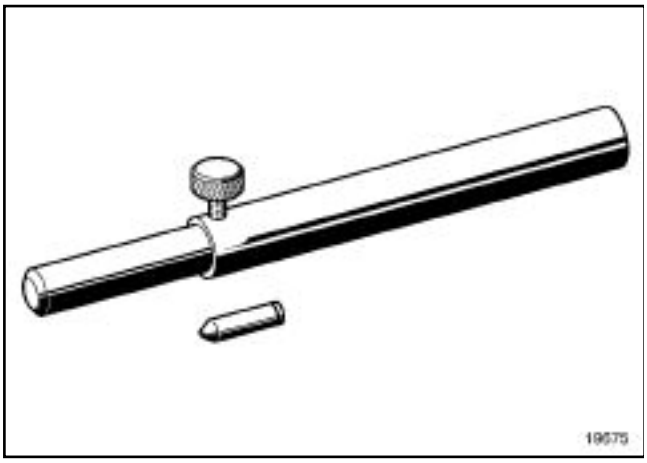

19675

The valve stem seals are refitted using either:

- a suitable tool, or
- tool (**Mot. 1511-01**).

XII - VALVE SPRINGS

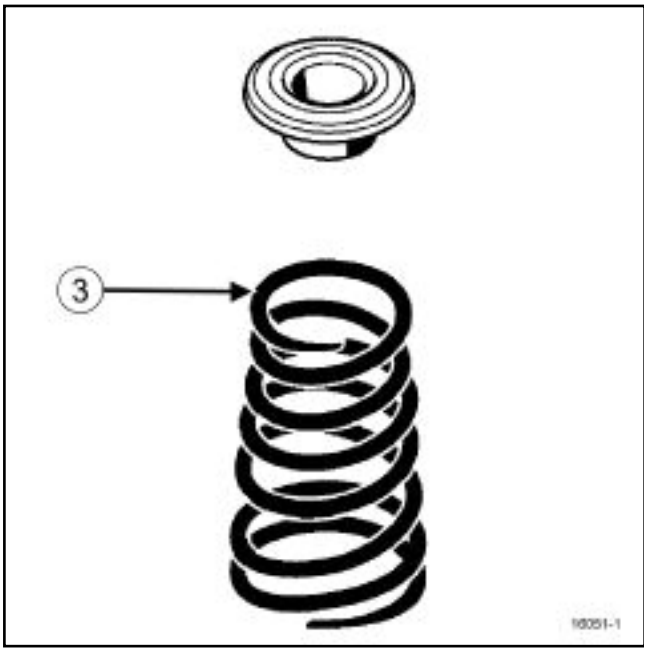

16051-1

The inlet and exhaust valve springs are identical.

The valve springs are the **conical** type and part (**3**) of the spring must face upwards.

WARNING

CE MOTEUR NE POSSEDE PAS DE RONDELLES INFERIEURES DE RESSORT DE SOUPAPE.

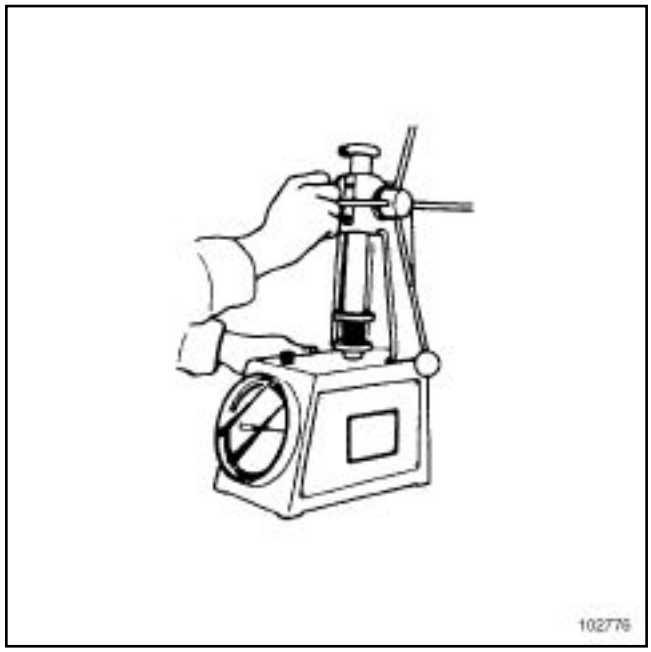

102776

Free length	**43.31mm**
Length under a load of: - **230 ± 12 N** - **500 ± 23 N**	 **33.80mm** **24.80mm**
Length, coils touching	**23.40mm**
Diameter of the wire	**3.45mm**
Internal diameter: - at the base of the spring - at the top of the spring	 **18.80 ± 0.2mm** **14.10 ± 0.2mm**
External diameter: - at the base of the spring - at the top of the spring	 **25.70 ± 0.2mm** **21 ± 0.2mm**

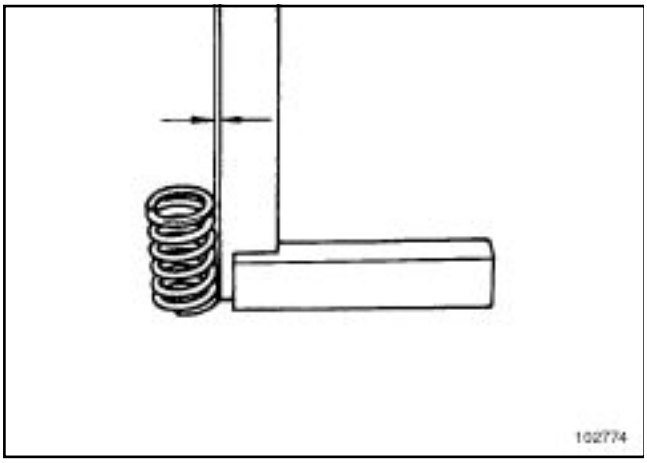

102774

Spring perpendicularity **1.2mm**

XIII - CAMSHAFT

1 - Identifying the camshaft

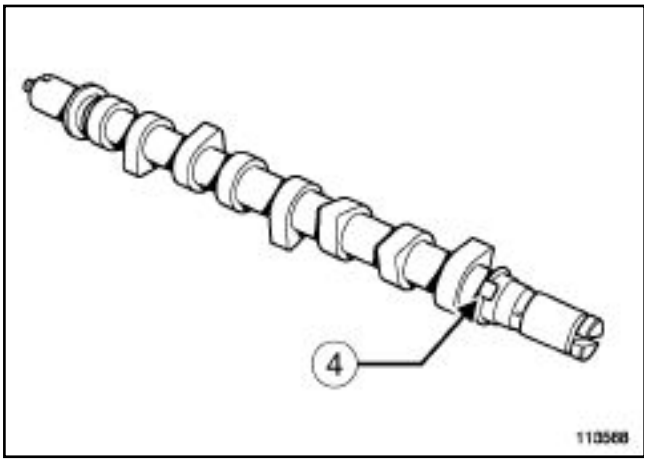

113568

With certain engines the camshaft has a target (**4**) for aligning the cylinders.

Engine type	Camshaft type
K9K 260-270-272-274-276-700-702-704-706-710-712-714-716-718-722-724-728-729-750-752-760-762-766-768-790-792	**WITHOUT the target (4)**
K9K 732 - 764	**WITH the target (4)**

2 - Camshaft longitudinal play

The longitudinal play must be between **0.08 and 0.178mm** .

3 - Camshaft radial play

The radial play must be between **0.04 and 0.081mm** .

4 - Camshaft eccentricity.

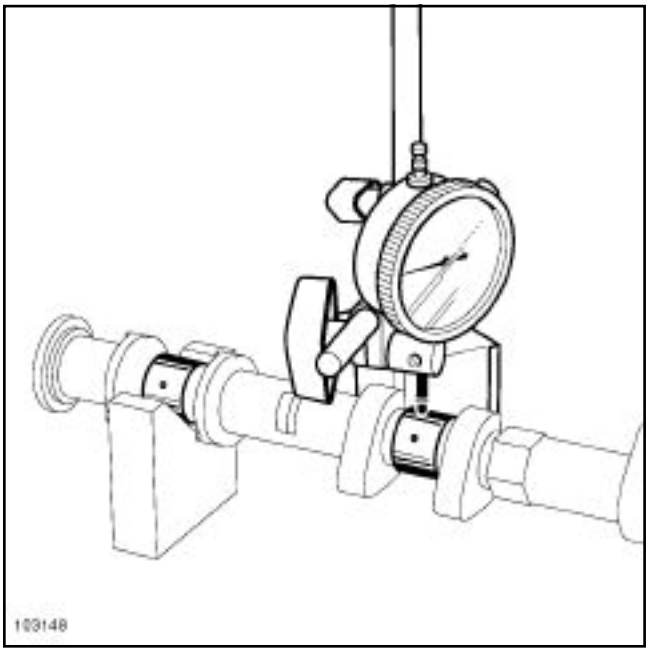

103148

The camshaft eccentricity is **0.05mm** .

5 - Number of camshaft bearings

The camshaft has **6** bearings.

6 - Camshaft bearing diameters

Number of bearings	Diameter of camshaft bearings on the camshaft	Diameter of camshaft bearings on the cylinder head
No. 1	**24.9895 ± 0.0105mm**	**25.05 ± 0.01mm**
No. 2		
No. 3		
No. 4		
No. 5		
No. 6	**27.9895 ± 0.0105mm**	**28.05 ± 0.01mm**

Note:

The no. 1 camshaft bearing is located at the flywheel end.

7 - Cam height

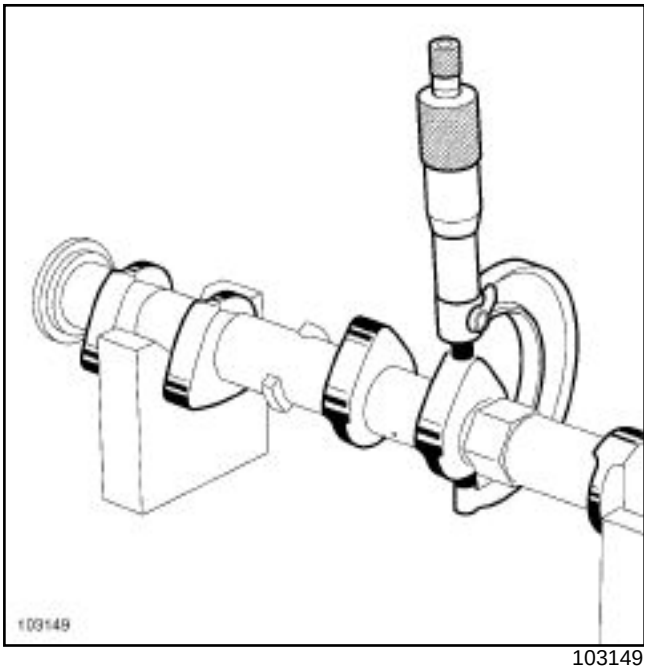

103149

	Inlet	Exhaust
Cam height	**44.015 ± 0.03mm**	**44.595 ± 0.03mm**

8 - Valve timing

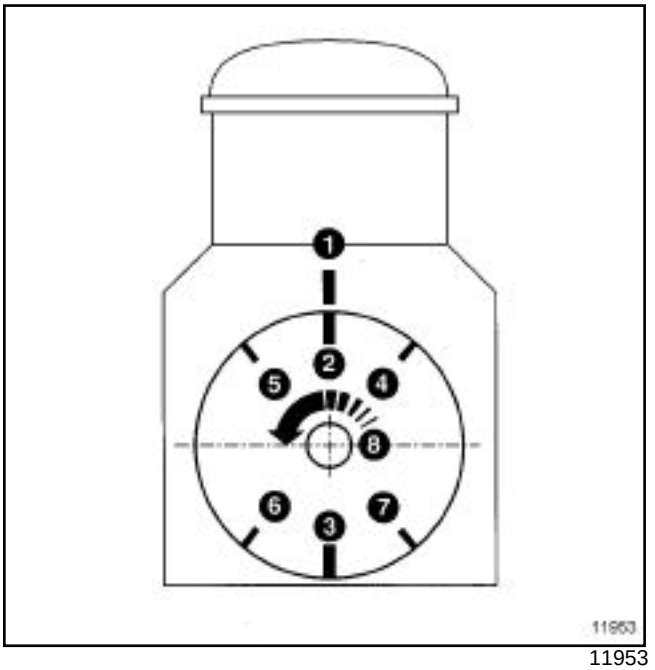

11953

- 1 TDC fixed marking on the cylinder block,
- 2 TDC movable marking on the flywheel,
- 3 BDC movable marking on the flywheel,
- 4 Inlet Opening Retardation **ROA** *,
- 5 Exhaust Closing Advance **AFE** **,
- 6 Inlet Closing Retardation **RFA** ,
- 7 Exhaust Opening Advance **AOE** ,
- 8 Crankshaft direction of rotation (flywheel end).

Note:

*If the **ROA** is negative, the valve will open after TDC.

If the **AFE is negative, the valve will close before TDC.

Theoretical settings for a lift of 0.7mm (no clearance)

	Inlet	Exhaust
Inlet Opening Retardation ROA	**-9°**	**-**
Inlet Closing Retardation RFA	**20°**	**-**
Exhaust Opening Advance AOE	**-**	**27°**
Exhaust Closing Advance **AFE**	**-**	**-7°**

XIV - TURBOCHARGER

Turbocharging pressure regulation valve

Engine type	Pressure regulation valve value in bar		Valve rod movement value in mm
	Pressure	Vacuum	
K9K 272-700-704-710-752-790	**1.3**	**-**	**1.95 ± 0.6**
K9K 260-270-702-706-722-750	**1.4**	**-**	**4.3 ± 0.6**
K9K 712-728-729-732-764	**-**	**0.5**	**1.7**
K9K 276-718-724-760-766	**-**	**0.6**	**7 ± 0.5**
K9K 274-714-716-762-768-792	**1.1**	**-**	**2.2 ± 0.5**

I - PISTONS

1 - Piston brand

These engines are fitted with **FEDERAL MOGUL** pistons.

2 - Piston combustion chamber volume

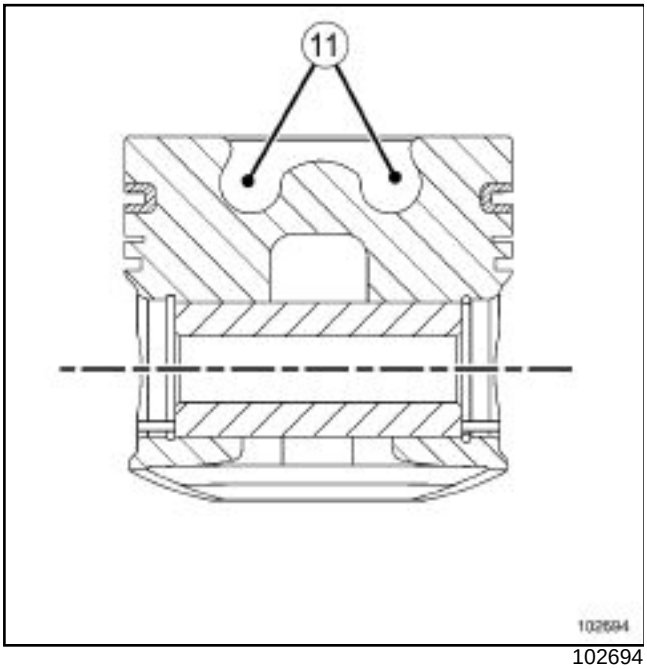

102694

Engine type	Piston combustion chamber volume
K9K 260-270-272-274-276-700-702-704-706-710-712-714-716-718-722-724-728-729-750-752-760-762-766-768-790-792	**16.418 ± 0.25 cc**
K9K 732-764	**19.96 ± 0.25 cc**

3 - Piston markings

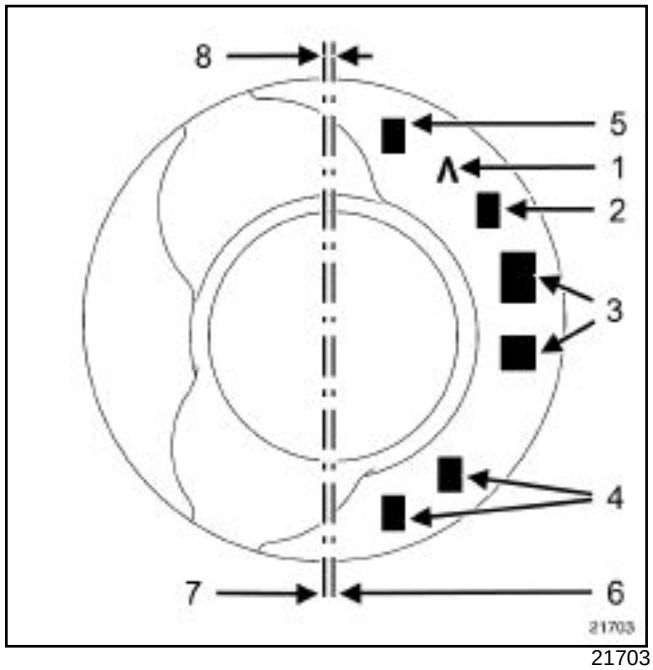

21703

(**1**) Direction of fitting the piston **Λ** facing the flywheel.

(**2**) Gudgeon pin height class which corresponds to the height between the gudgeon pin and the piston crown.

(**3**) Used by the supplier only.

(**4**) Used by the supplier only.

(**5**) Used by the supplier only.

(**6**) Piston axis of symmetry.

(**7**) Gudgeon pin hole axis.

(**8**) Offset between gudgeon pin hole and piston axis of symmetry is **0.3mm** .

4 - Gudgeon pin height classes

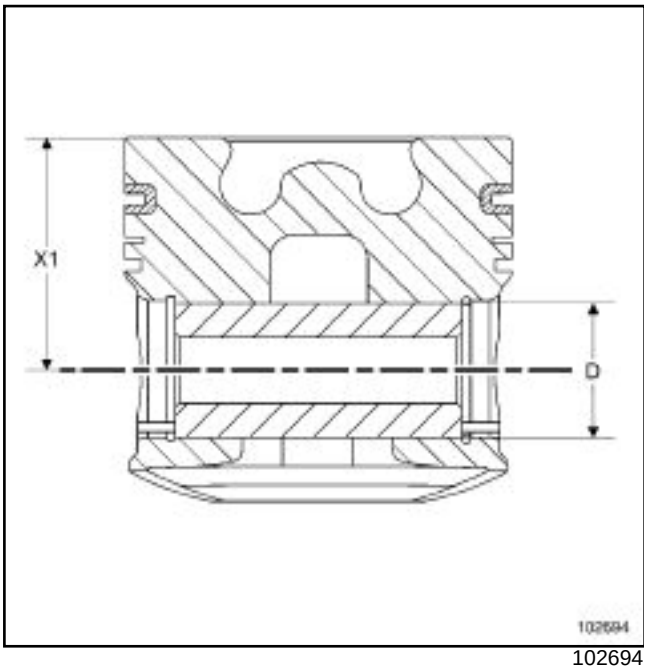

102694

Dimension (**X1**) represents the height of the gudgeon pin.

Dimension (**D**) represents the gudgeon pin diameter.

Engine type	Diameter of gudgeon pin D = 25mm		Diameter of gudgeon pin D = 26mm	
	Piston category	**Gudgeon pin height in mm**	**Piston category**	**Gudgeon pin height in mm**
K9K 260-700-702-704-710-722 **up until 25/11/2002**	K*	**41.646 to 41.687**	-	-
	L*	**41.688 to 41.730**	-	-
	M*	**41.731 to 41.772**	-	-
	N*	**41.773 to 41.814**	-	-
	P	**41.815 to 41.856**	-	-
K9K 260-700-702-704-710-722 **from 25/11/2002** K9K 270-272-274-706-714-716-750-752-762-768-790-792	-	-	K*	**41.646 to 41.687**
	-	-	L*	**41.688 to 41.730**
	-	-	M*	**41.731 to 41.772**
	-	-	N*	**41.773 to 41.814**
	-	-	P	**41.815 to 41.856**

Engine type	Diameter of gudgeon pin D = 25mm		Diameter of gudgeon pin D = 26mm	
	Piston category	Gudgeon pin height in mm	Piston category	Gudgeon pin height in mm
K9K 276-712-718-724-728-729-732-760-764-766	-	-	J	**41.605 to 41.646**
	-	-	K*	**41.647 to 41.688**
	-	-	L*	**41.689 to 41.730**
	-	-	M*	**41.731 to 41.772**
	-	-	N	**41.773 to 41.814**

Note:

***** = piston sold by the Parts Department.

WARNING

- For engines **K9K 260-270-274-700-702-704-706-710-714-716-722-750-752-762-768-790-792** fitted with gudgeon pins of diameter D = **25 or 26mm** , the Parts Department will only supply four categories of piston **K, L, M, N** .

- If the engine is fitted with a category **P** piston, replace it with a category **N** piston.

WARNING

- For engines **K9K 276-712-718-724-728-729-732-760-764-766** , the Parts Department will only supply three categories of piston **K, L, M** .

- If the engine is fitted with a category **J** piston, replace it with a category **K** piston.

- If the engine is fitted with a category **N** piston, replace it with a category **M** piston.

5 - Piston diameter

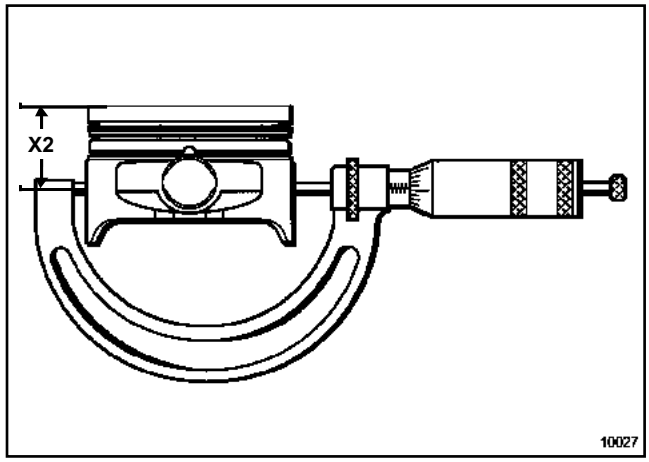

10027

The piston diameter must be measured with (**X2**) = **56mm**

Engine type	Piston diameter in mm
K9K 260-270-272-274-700-702-704-706-710-714-716-722-750-752-762-768-790-792	**75.949 ± 0.007**
K9K 276-712-718-724-728-729-732-760-764-766	**75.945 ± 0.007**

6 - Gudgeon pin

Fitting the free floating pin in the con rod and in the piston.

The gudgeon pin is retained by circlips.

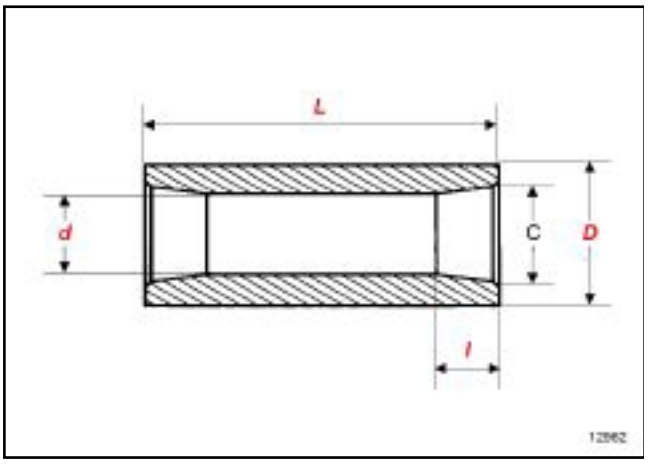

12962

	Gudgeon pin dimensions in mm	Engine type
Length (**L**)	**60 +0 / -0.3**	All K9K
External diameter (**D**)	**25 +0 / -0.005**	K9K 260-700-702-704-710-722 **up until 25/11/2002**
	26 +0 / -0.005	K9K 260-700-702-704-710-722 **from 25/11/2002** K9K 270-272-274-276-706-712-714-716-718-724-728-729-732-750-752-760-762-764-766-768-790-792
Internal diameter (**d**)	**13.75 +0.1 / -0.2**	K9K 260-700-702-704-710-722 **up until 25/11/2002**
	13.5 +0.1 / -0.2	K9K 260-700-702-704-710-722 **from 25/11/2002** K9K 270-272-274-276-706-712-714-716-718-724-728-729-732-750-752-760-762-764-766-768-790-792
Chamfer diameter (**C**)	**20 ± 0.25**	K9K 732-764
Chamfer length (**l**)	**6**	

7 - Piston protrusion

WARNING
The dial gauge rod must not be in a valve clearance.

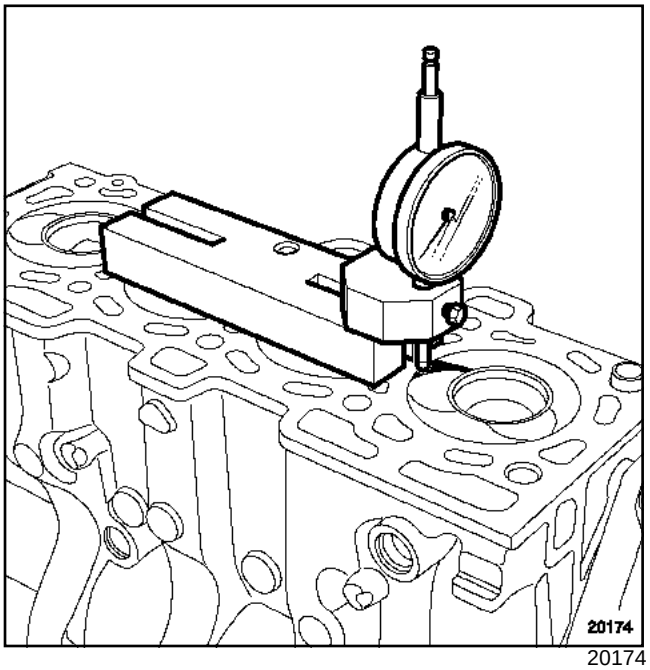

20174

Engine type	Piston protrusion in mm
K9K 260-700-702-704-710-722 **up until 25/11/2002**	**0.192 ± 0.093**
K9K 260-700-702-704-710-722 **from 25/11/2002** K9K 270-272-706-750-752-790	**0.154 ± 0.130**
K9K 274-276-712-714-716-718-724-728-729-732-760-762-764-766-768-792	**0.159 ± 0.129**

II - PISTON RINGS

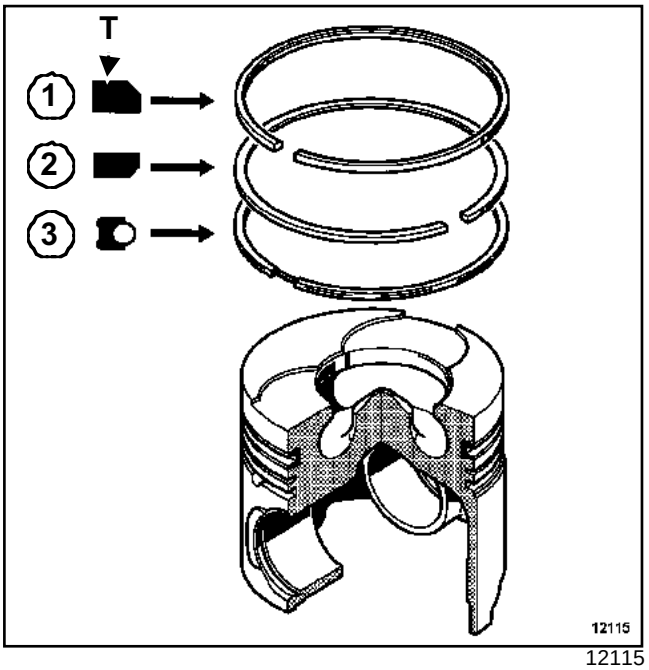

12115

Piston rings are supplied ready adjusted.

(**T**) = TOP

1 - Thickness of the piston rings

Piston rings	Thickness (in mm)
Compression ring ***(1)***	**2 -0.01 / -0.03**
Sealing ring ***(2)***	**2 -0.01 / -0.03**
Scraper ring ***(3)***	**2.5 -0.01 / -0.03**

2 - Piston ring clearance in groove

Piston rings	Piston ring clearance in mm
Compression	**0.2 to 0.35**
Sealing	**0.7 to 0.9**
Scraper	**0.25 to 0.5**

III - CON RODS

1 - Type of con rod

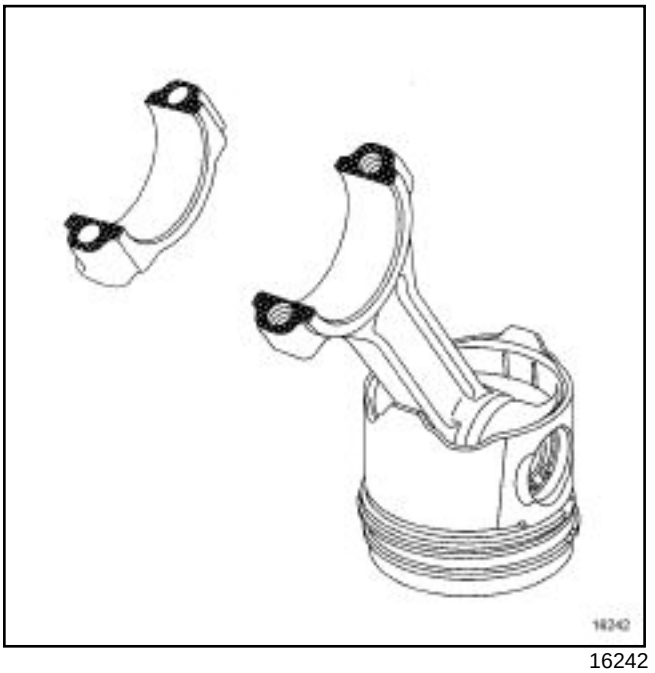

16242

The con rods are of the "SPLIT" type.

Note: The con rod small end bushes cannot be replaced.

2 - Guidelines for marking con rods

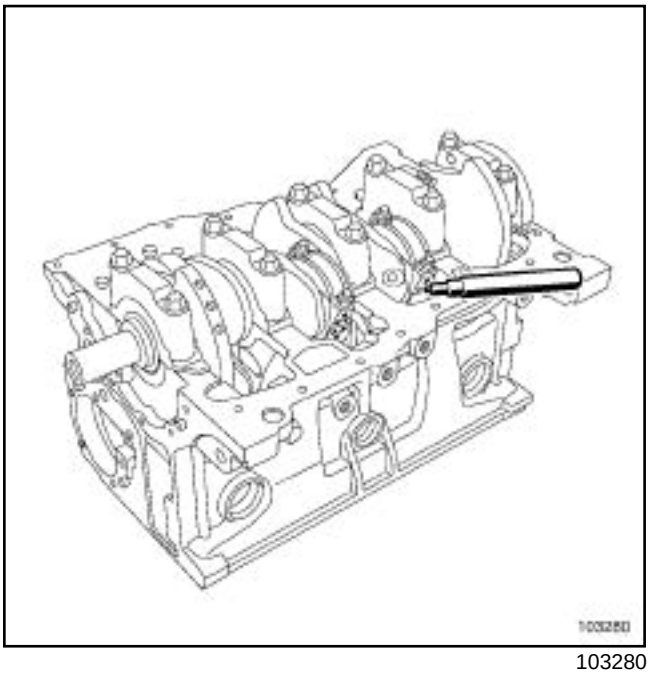

103280

WARNING

Do not use a punch or an etching tool to mark the con rod caps to match their bodies, to prevent incipient breakage of the con rod.

Use an indelible marker pen.

3 - Weigh difference for the con rod-piston-gudgeon pin assembly

The maximum weight difference for the con rod-piston-gudgeon pin assembly for the same engine must be **25 g** .

4 - Con rod dimensions

	Con rod dimensions in mm	**Engine type**
Distance between big end and little end centres	**133.75**	All K9K
Big end diameter	**47.619 ± 0.009**	All K9K
Small end diameter (with bush)	**25.019 ± 0.006**	K9K 260-700-702-704-710-722 **up until 25/11/2002**
	26.019 ± 0.006	K9K 260-700-702-704-710-722 **from 25/11/2002** K9K 270-272-274-276-706-712-714-716-718-724-728-729-732-750-752-760-762-764-766-768-790-792

5 - Big end longitudinal play

The longitudinal play must be between **0.205 and 0.467mm** .

6 - Big end radial play

The radial play must be between **0.010 and 0.064mm** .

IV - CRANKSHAFT

1 - Crankshaft markings

Marking one

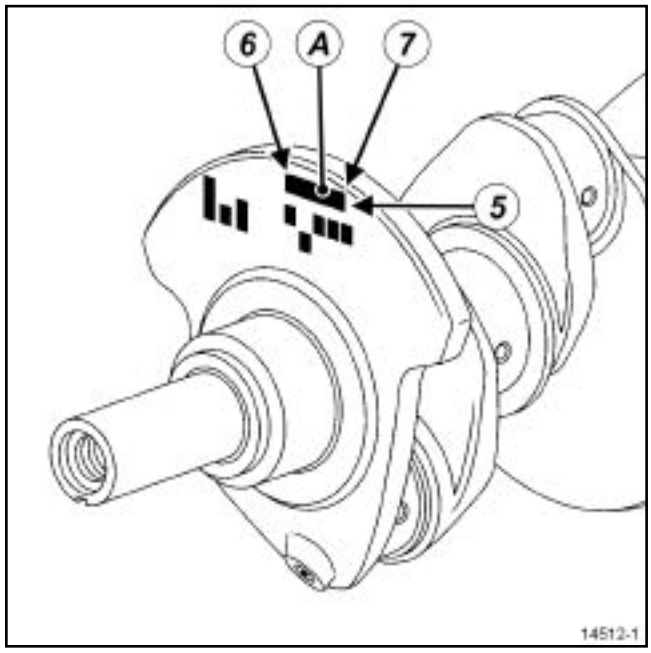

14512-1

Marking two

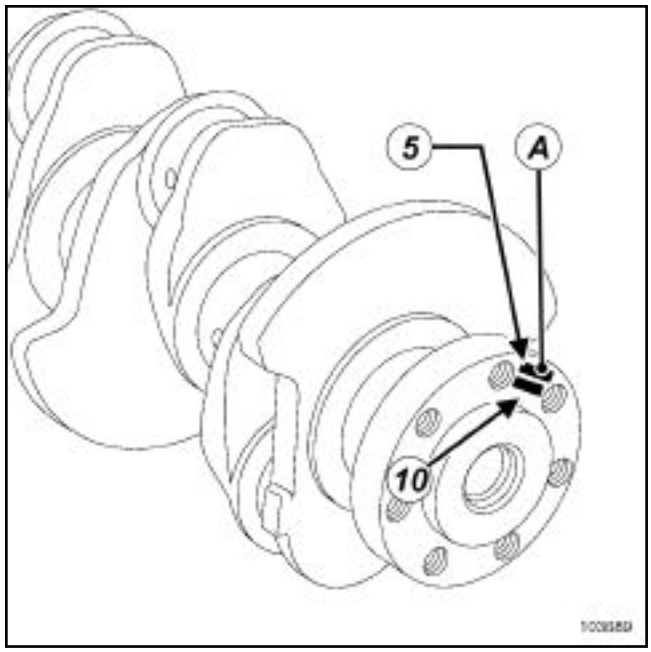

103689

Marking "A" in detail

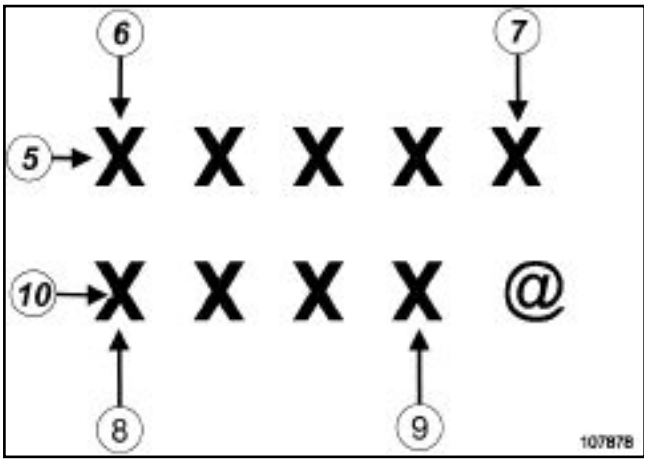

107878

(**5**) : line indicating the diameter category of the journals,

(**6**) : diameter category of journal no. 1, flywheel end,

(**7**) : diameter category of journal no. 5, timing end,

(**8**) : diameter category of crankpin no. 1, flywheel end,

(**9**) : diameter category of crankpin no. 4, timing end,

(**10**) : line indicating the diameter category of the crankpins.

2 - Categories of journal diameters

Table of journal diameter categories

Journal category mark on the crankshaft	Journal diameter categories (mm)
A, G, K, R,W	**D1 = 47.990 to 47.997 exclusive**
B, H, L, S,Y	**D2 = 47.997 inclusive to 48.003 exclusive**
C, J, O, T, Z	**D3 = 48.003 inclusive to 48.010**

3 - Crankshaft dimensions

Diameter of the journals	**48 ± 0.01mm**
Crankpin diameter	**43.97 ± 0.01**
Maximum run-out allowed on the flywheel bearing face of the flywheel	**0.6mm**

4 - Crankshaft lateral play:

The lateral play of the crankshaft must be between:

- Without crankshaft lateral shim wear **0.045 and 0.252mm** ,
- With crankshaft lateral shim wear **0.045 and 0.852mm** .

5 - Journal radial play

The radial play of the journals must be between **0.010 and 0.054mm** .

6 - Number of journals

There are **5** journals.

V - CYLINDER BLOCK

1 - Diameter of the shafts

This engine only has one category of shaft diameter **76.009 ± 0.015mm**

2 - Identifying the bearing journal diameters on the cylinder block

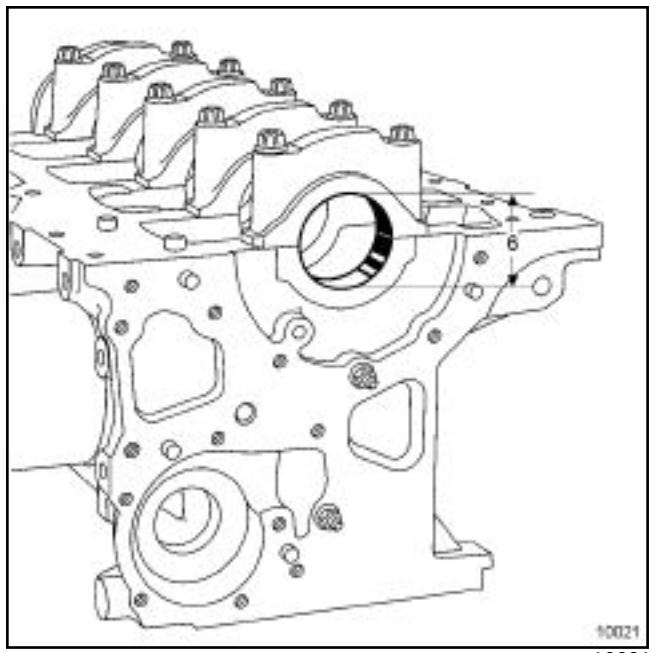

10021

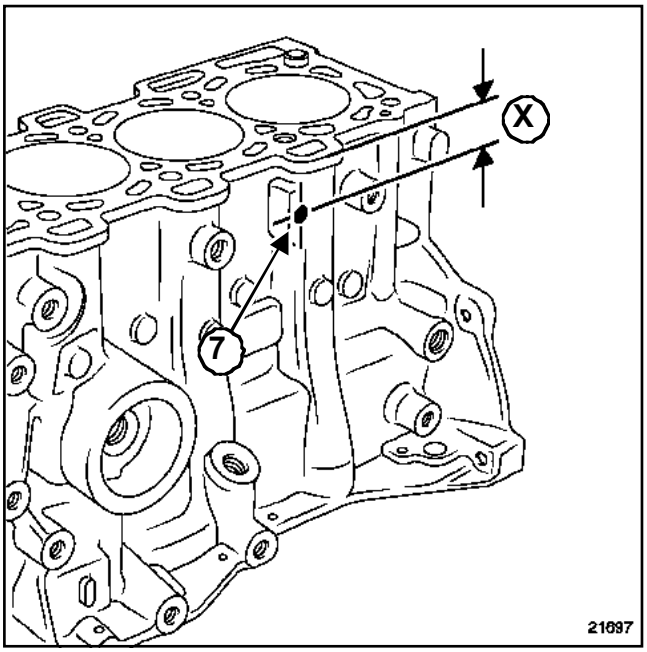

21697

The cylinder block bearing diameters (**6**) are marked with a drill hole on it (**7**) located above the oil filter.

For every engine there can only be one category of crankshaft bearing diameter.

3 - Table of bearing diameter classes

Positions of hole (7)	Category marking	Cylinder block bearing diameter (mm)
X = 33mm	1 or Blue	**51.936 to 51.942 exclusive**
X = 43mm	2 or Red	**51.942 inclusive to 51.949**

4 - Cylinder block gasket face bow

The maximum cylinder block gasket face bow is **0.03mm** .

VI - BEARING SHELLS

1 - Crankshaft bearing shells

The engine is fitted with bearing shells without fool-proofing.

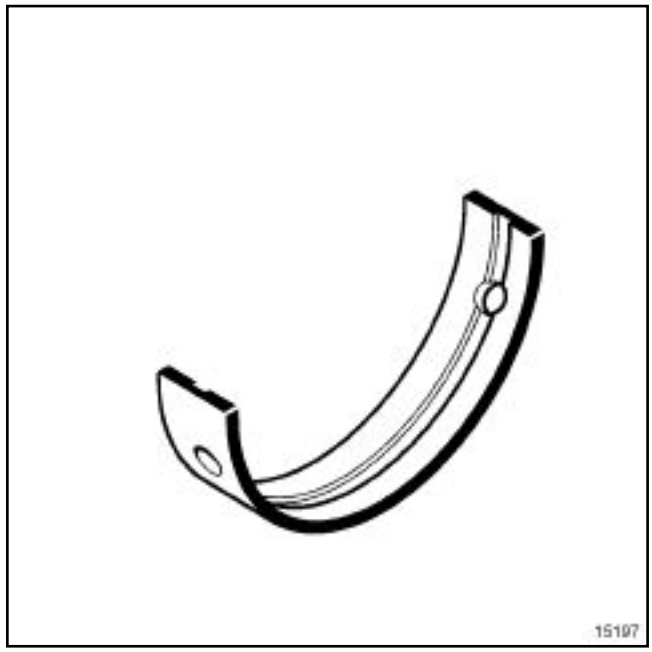

15197

The crankshaft bearing shells are fitted on the cylinder block and the bearings using the **Mot. 1493-01** .

a - Direction of fitting the journal shells

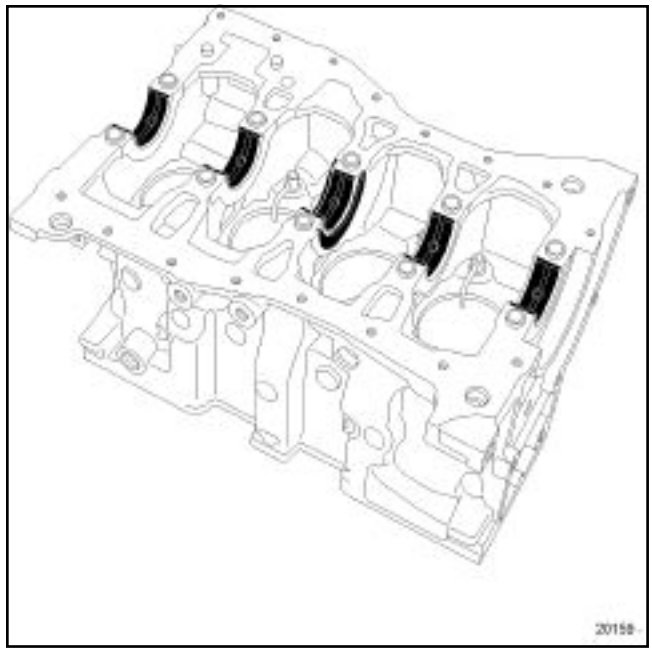

20159

Fit the **grooved** bearing shells on all the bearings on the cylinder block

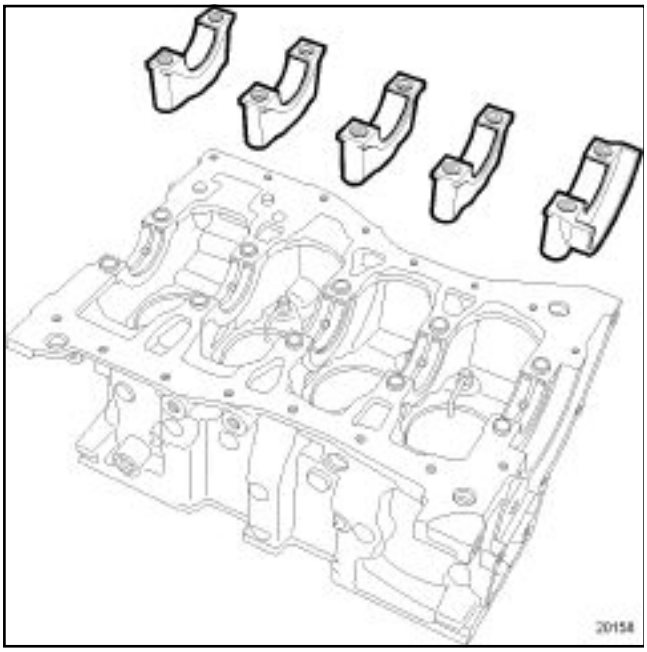

20158

Fit the **non-grooved** bearing shells on the bearing caps.

b - Matching the journal shells to the cylinder block

Cylinder block bearing diameter categories	**Crankshaft journal diameter category**		
	D1	**D2**	**D3**
1	C1 1.949 to 1.955 Yellow	C2 1.946 to 1.952 Blue	C3 1.943 to 1.949 Black
2	C4 1.953 to 1.959 Red	C1 1.949 to 1.955 Yellow	C2 1.946 to 1.952 Blue
	Bearing shell thickness and category		

2 - Conrod bearing shells

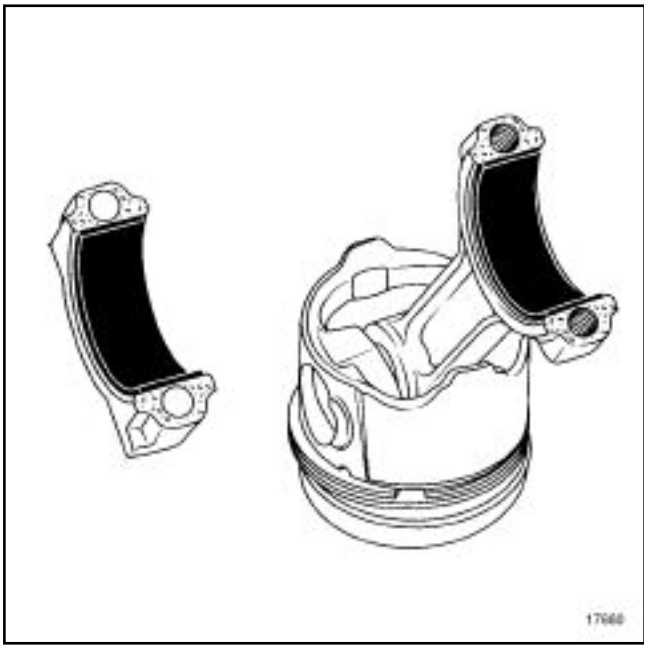

17680

The engine is fitted with bearing shells without fool-proofing.

The con rod bearing shells are fitted using tools (**Mot. 1492**) and (**Mot. 1492-03**).

Bearing shell width

> Note:
>
> The upper and lower con rod bearing shells are not the same width.

Bearing shell width:

- Con rod shank bearing: **20.625 ± 0.125mm** ,
- Con rod cap bearing: **17.625 ± 0.125mm** .

3 - Crankshaft lateral shims

a - Direction of fitting of lateral shims

Position the **lateral shim grooves facing the crankshaft** .

b - Position of lateral shims

The lateral shims are located on crankshaft bearing **no. 3** .

c - Thickness of lateral shims

There are two lateral shim thicknesses: **2.80mm** and **2.85mm** .

STANDARD EXCHANGE ENGINE

1 - Preparation of the old engine for return

Clean the engine.

Drain the oil and coolant from the old engine.

Secure the old engine to the stand and in the same conditions as the standard exchange engine:

- fit plastic plugs and covers,
- fit the cardboard cover over the whole assembly.

2 - Parts to leave on the old engine

Parts to leave on the old engine or to include in the return box:

- the dipstick,
- the oil filter,
- the oil filter seat,
- the oil cooler,
- the oil level sensor,
- the rocker cover,
- the coolant pump,
- the vacuum pump,
- the high-pressure pump,
- the injector rail,
- the injectors,
- the heater plugs,
- the entire timing end (crankshaft sprocket, belt, tensioner, camshaft sprocket),
- the timing covers,
- the crankshaft accessories pulley,
- the flywheel or the drive plate,
- the clutch pressure plate and driven plate,
- the lifting eyes,
- the cylinder head suspended mounting.

3 - Parts to remove from the old engine

Parts to remember to remove from the old engine:

- all the coolant system pipes,
- the oil pressure switch,
- the pinking sensor,
- the coolant inlet hose,
- the coolant outlet unit,
- the inlet manifold,
- the exhaust manifold,
- the turbocharger,
- the exhaust gas recirculation valve,
- the catalytic converter,
- the accessories (alternator, air conditioning compressor, power-assisted steering pump),
- the accessories multifunction support.

Illustration	Tool number	Tool part number	Description
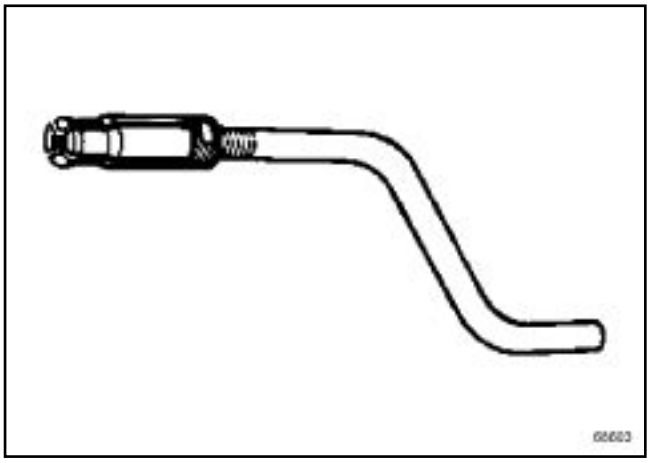 68603	**Mot. 11**	No longer available from the Parts Department (see Equipment required)	Crankshaft spigot bush extractor
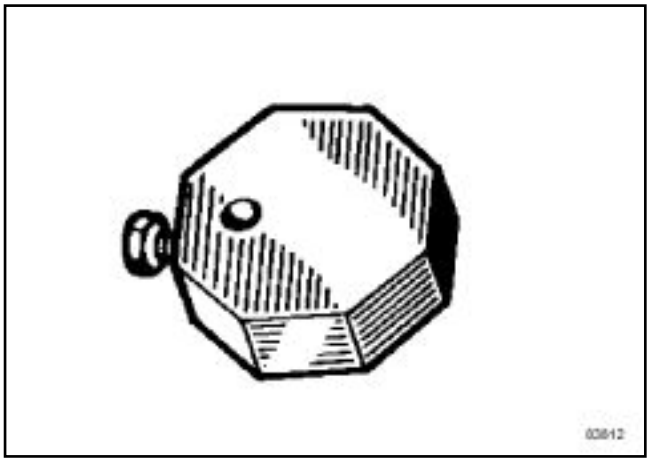 83812	**Mot. 251-01**	00 00 025 101	Dial gauge support used with **Mot. 252-01**
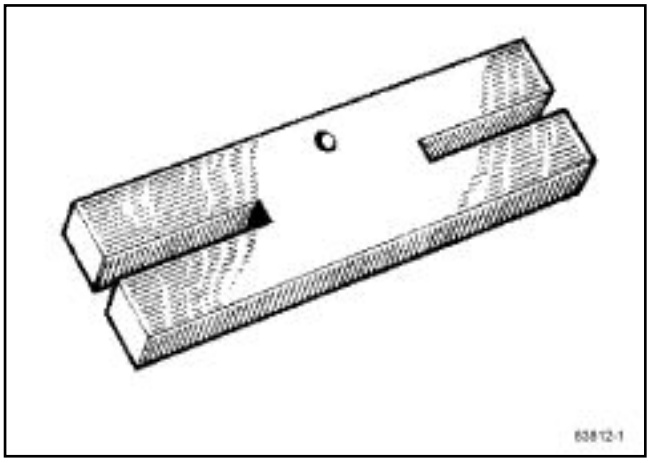 83812-1	**Mot. 252-01**	00 00 025 201	Pressure plate for measuring piston protrusion, which is to be used with **Mot. 251-01** .

Illustration	Tool number	Tool part number	Description
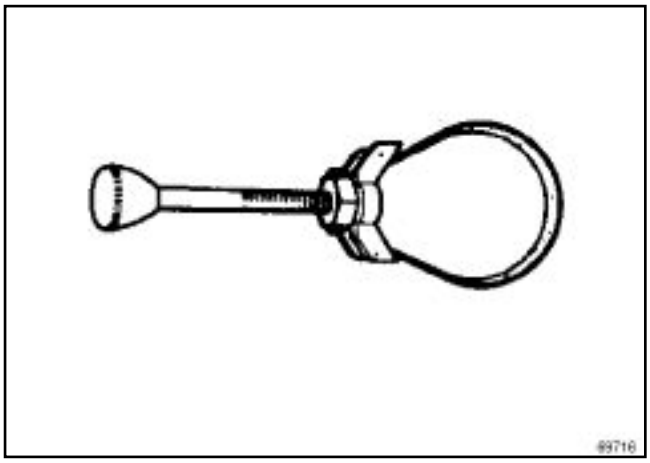 69716	**Mot. 445**	00 00 044 500	Oil filter strap wrench.
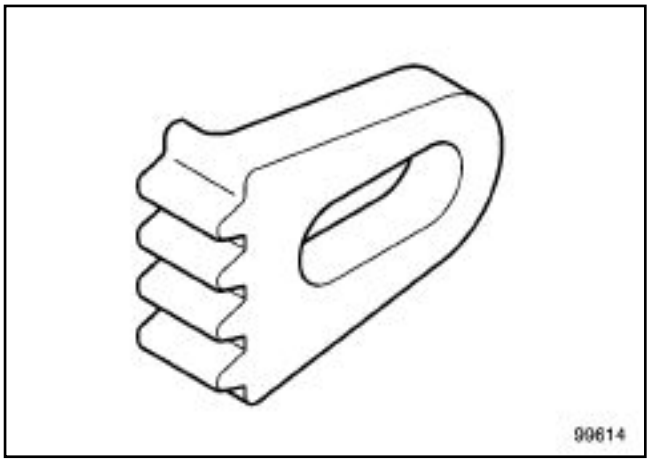 99614	**Mot. 582-01**	00 00 058 201	Flywheel locking tool.
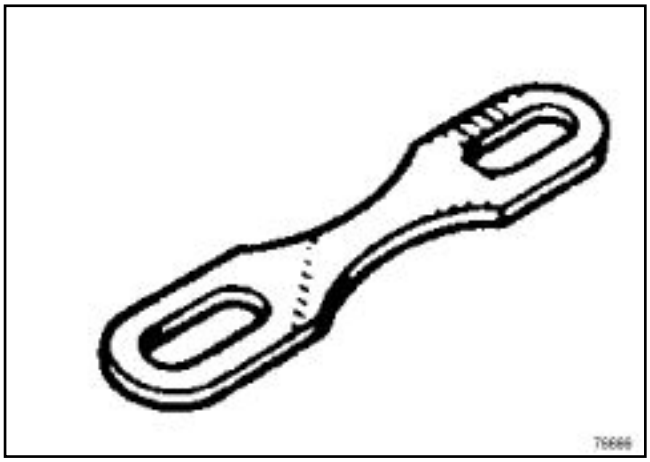 76666	**Mot. 588**	00 00 058 800	Cylinder block liner clamps.

Illustration	Tool number	Tool part number	Description
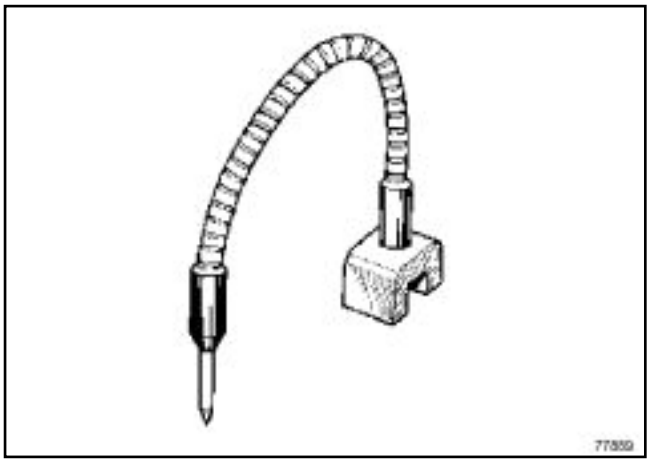 77889	**Mot. 591-02**	00 00 059 102	Magnetic hose for angle tightening.
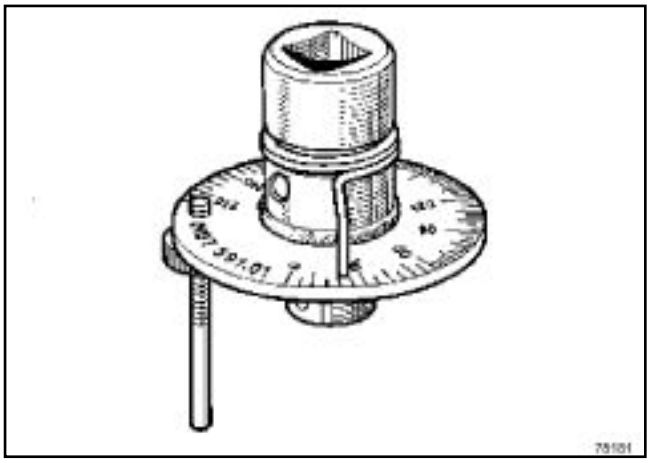 78181	**Mot. 591-04**	00 00 059 104	Cylinder Head bolt tightening gauge (1/2" drive).
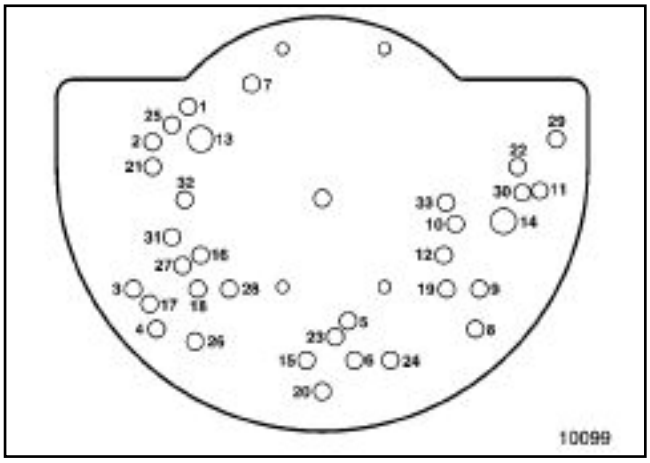 10099	**Mot. 792-03**	00 00 079 203	Engine stand plate.

Illustration	Tool number	Tool part number	Description
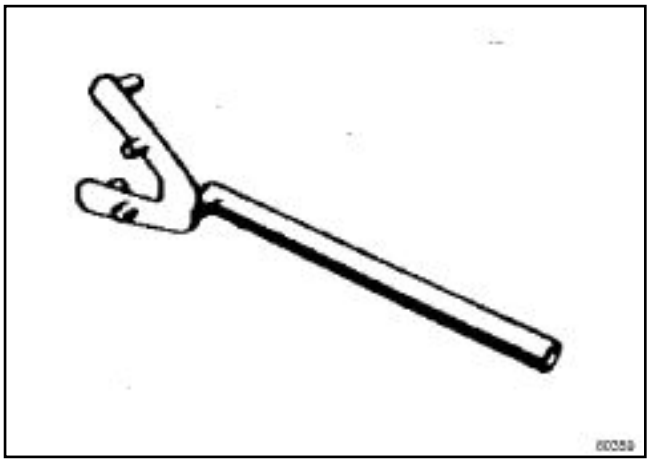 80359	**Mot. 799-01**	00 00 079 901	Pinion locking tool.
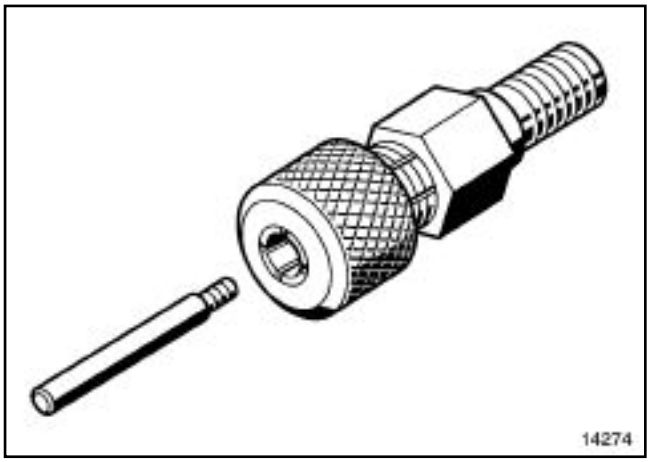 14274	**Mot. 856-02**	00 00 085 602	Dial gauge support.

Illustration	Tool number	Tool part number	Description
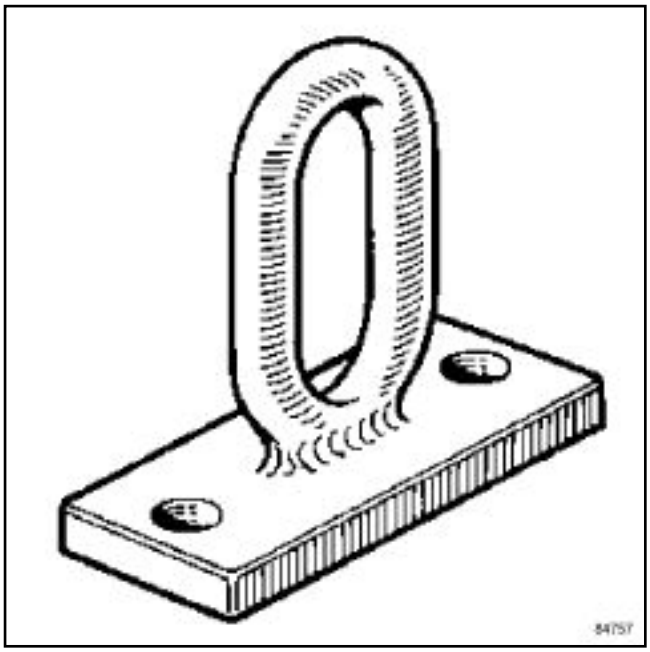 84757	**Mot. 923**	00 00 092 300	Engine lifting eye.
	Mot. 1018	00 00 101 800	Oil change wrench
	Mot. 1319-01	00 00 131 901	Crankpin height measuring tool.
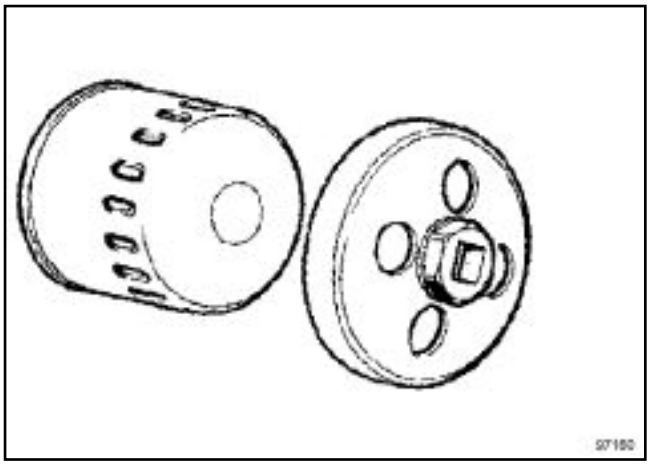 97160	**Mot. 1329**	00 00 132 900	Oil filter removing tool - 76mm diameter.

Illustration	Tool number	Tool part number	Description
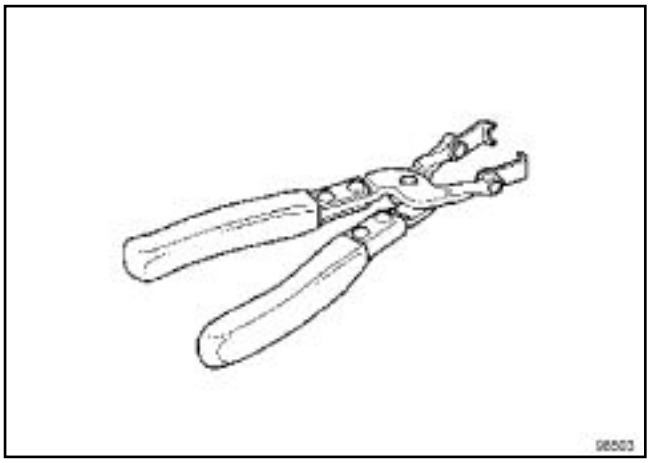 98503	**Mot. 1335**	00 00 133 500	Pliers for removing valve stem seals.
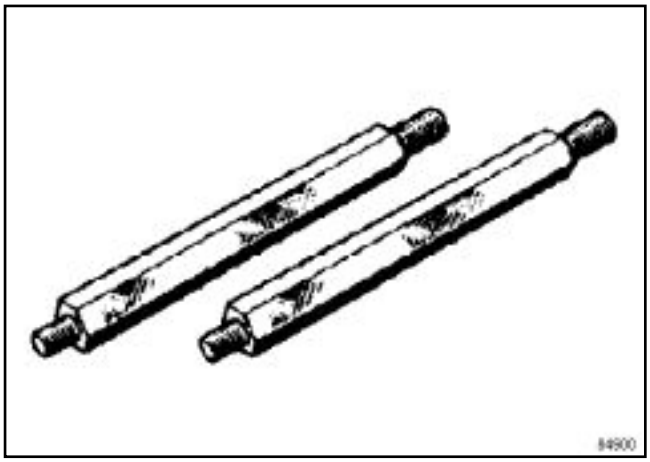 84900	**Mot. 1378**	00 00 137 800	Support studs X and Y which can be fitted to the engine stand plate **Mot. 792-03** .
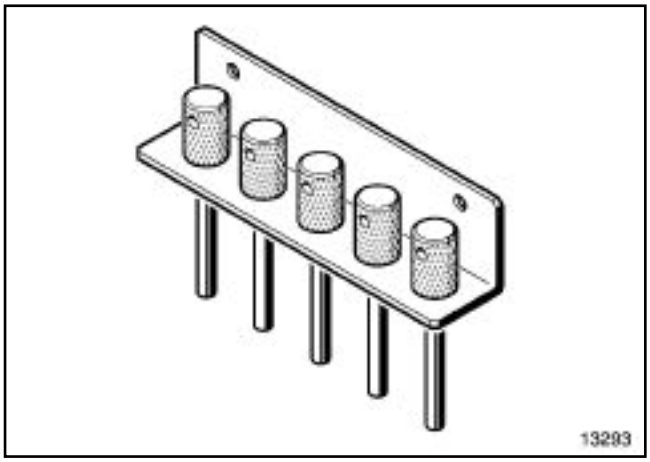 13293	**Mot. 1430**	00 00 143 000	Pin set for timing adjustment.

Illustration	Tool number	Tool part number	Description
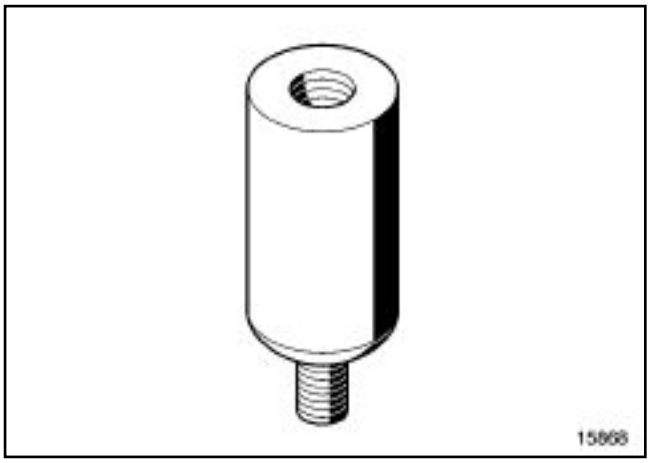 15868	**Mot. 1485-01**	00 00 148 501	Tool for removing piston cooling jets.
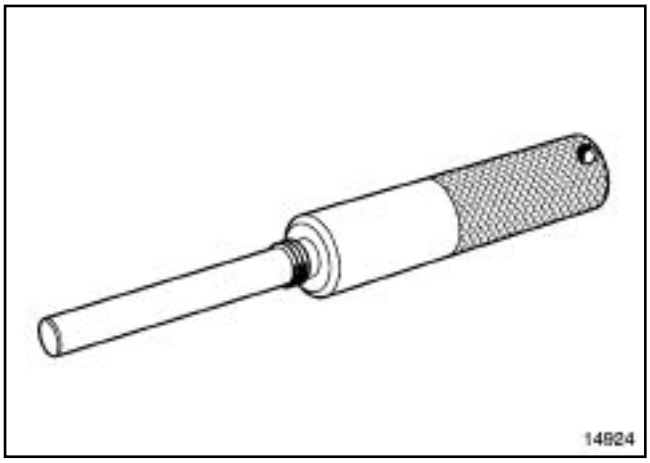 14924	**Mot. 1489**	00 00 148 900	TDC setting pin.
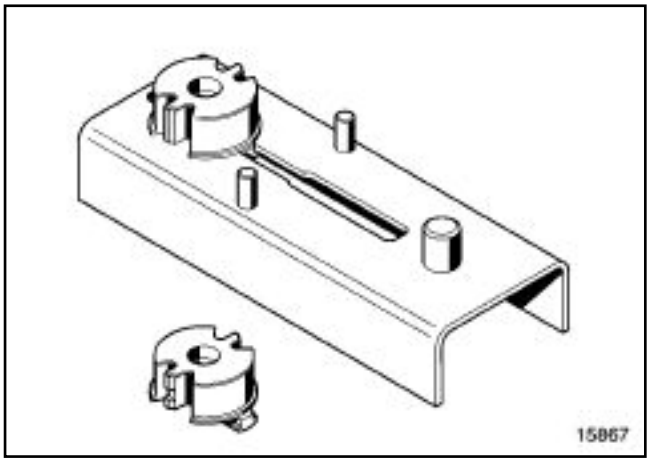 15867	**Mot. 1492**	00 00 149 200	Tool for fitting main bearing shells.

Illustration	Tool number	Tool part number	Description
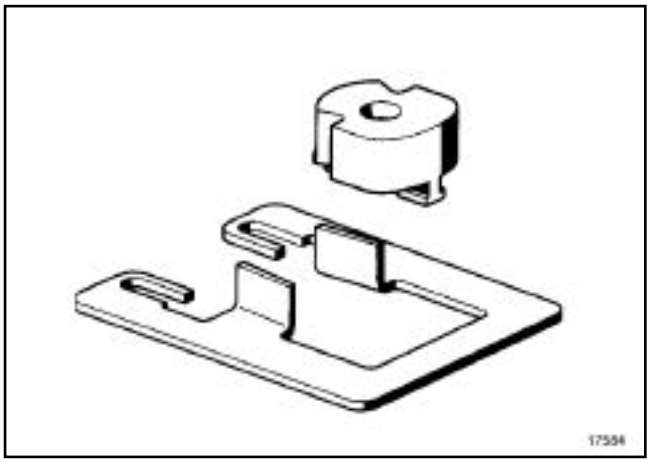 17584	**Mot. 1492-03**	00 00 149 203	Adapter kit for fitting the con-rod bearing shells.
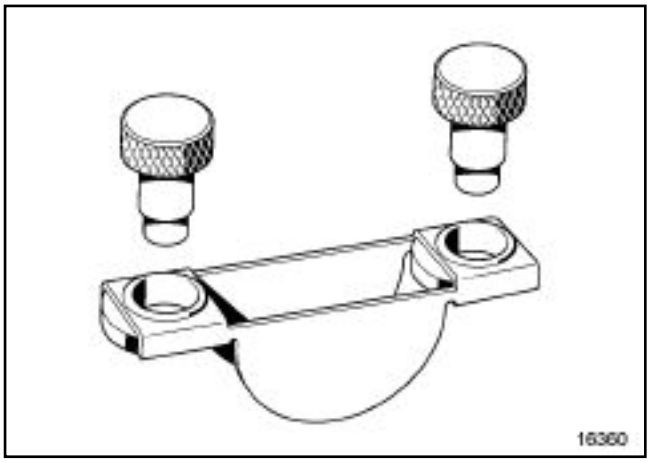 16360	**Mot. 1493-01**	00 00 149 301	Tool for fitting crankshaft bearing shells.
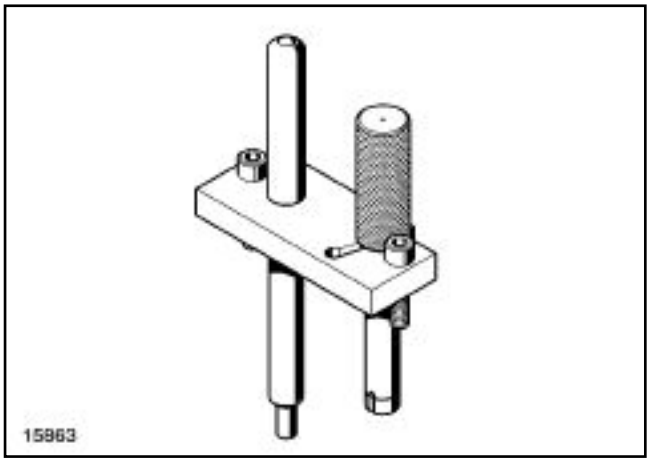 15863	**Mot. 1494**	00 00 149 400	Tool for fitting piston cooling jets.

Illustration	Tool number	Tool part number	Description
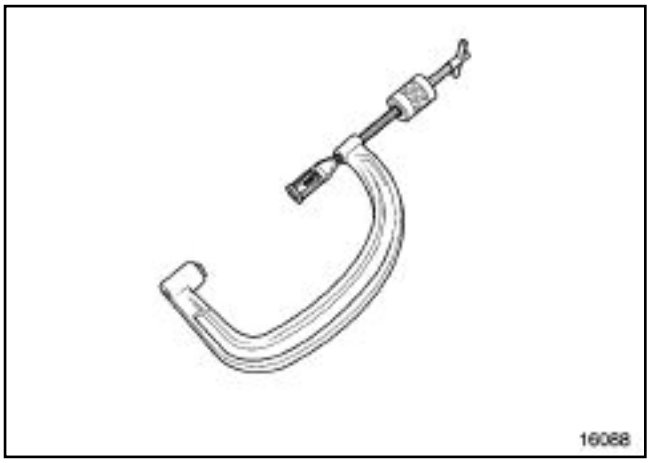 16088	**Mot. 1502**	00 00 150 200	Valve spring compression tool.
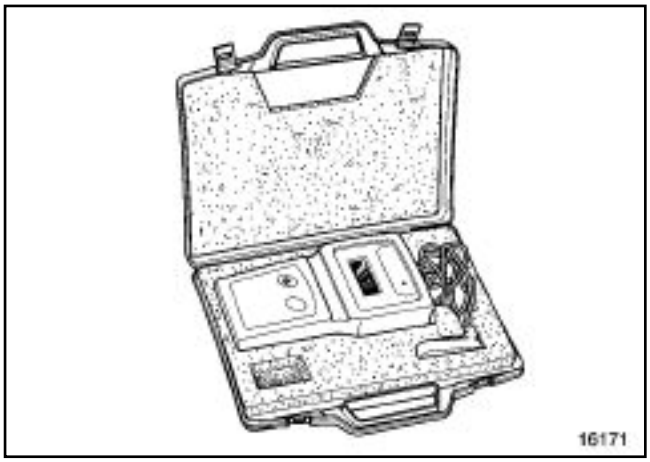 16171	**Mot. 1505**	No longer available in the Parts Department, replaced by **Mot. 1715**	Frequency meter for belt tension.
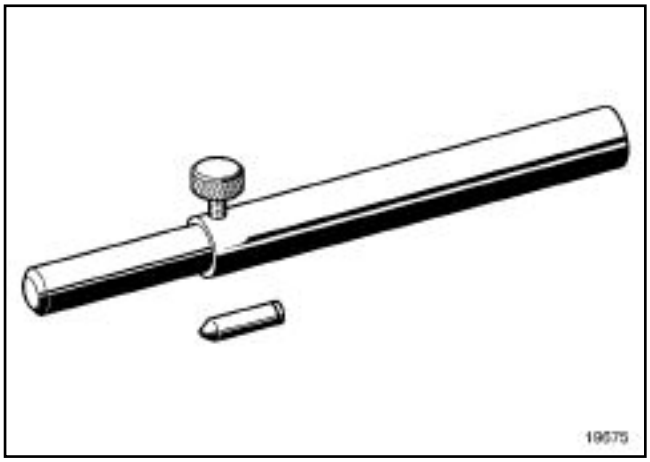 19675	**Mot. 1511-01**	00 00 151 101	Valve stem seal tool.

Illustration	Tool number	Tool part number	Description
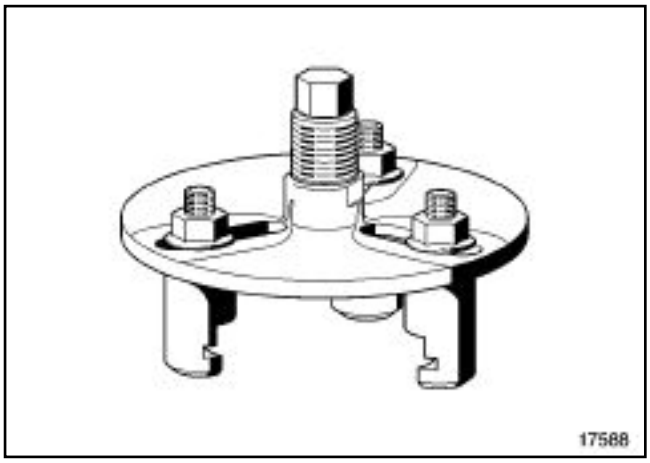 17588	**Mot. 1525**	00 00 152 500	High pressure pump sprocket extractor.
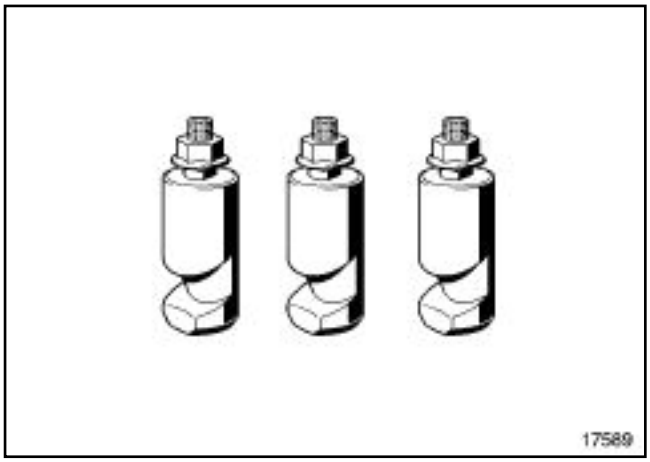 17589	**Mot. 1525-02**	00 00 152 502	High pressure pump sprocket extractor claws.
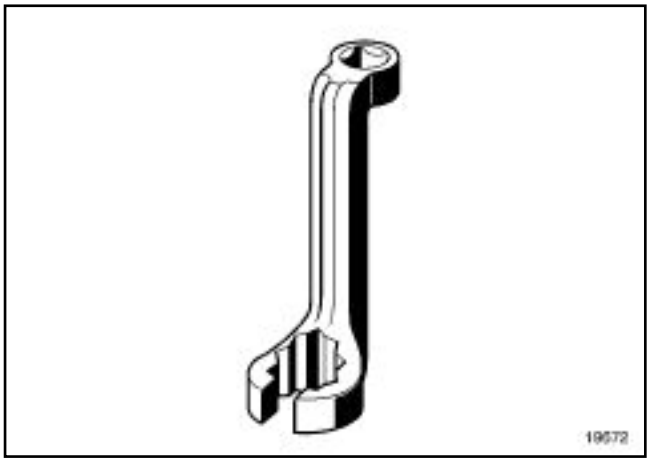 19672	**Mot. 1566**	00 00 156 600	Spanner for high pressure pipe nuts.

Illustration	Tool number	Tool part number	Description
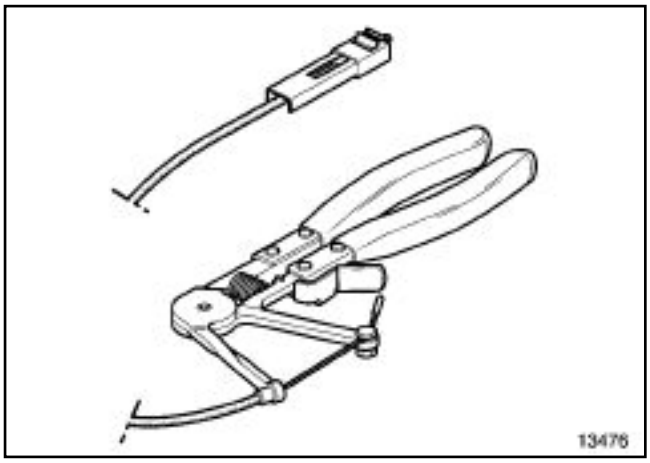 13476	**Mot. 1567**	00 00 151 300	Long reach EGR clip pliers.
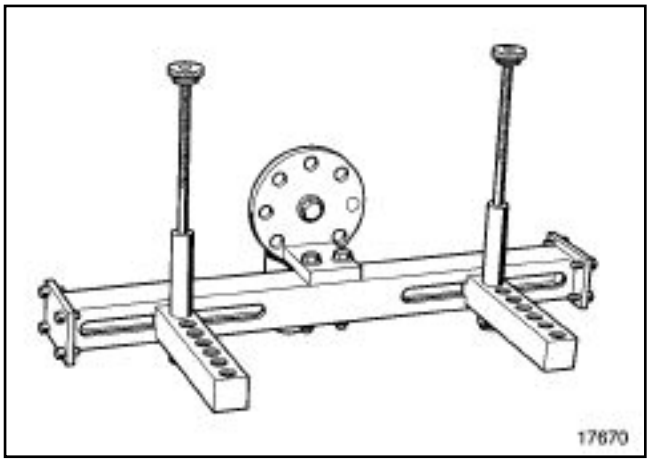 17670	**Mot. 1573**	00 00 157 300	Cylinder head support.
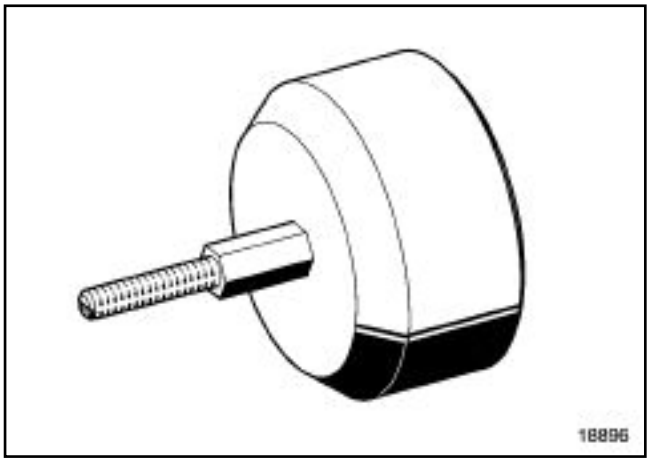 18896	**Mot. 1585**	00 00 158 500	Tool for fitting crankshaft seal (flywheel end).

Illustration	Tool number	Tool part number	Description
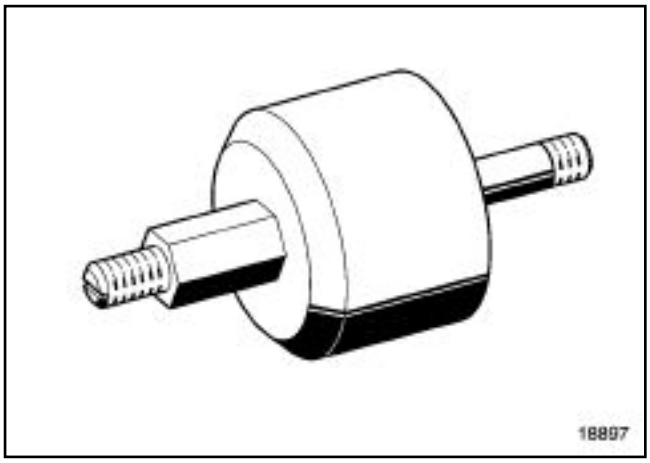 18897	**Mot. 1586**	00 00 158 600	Tool for fitting crankshaft seal (timing end).
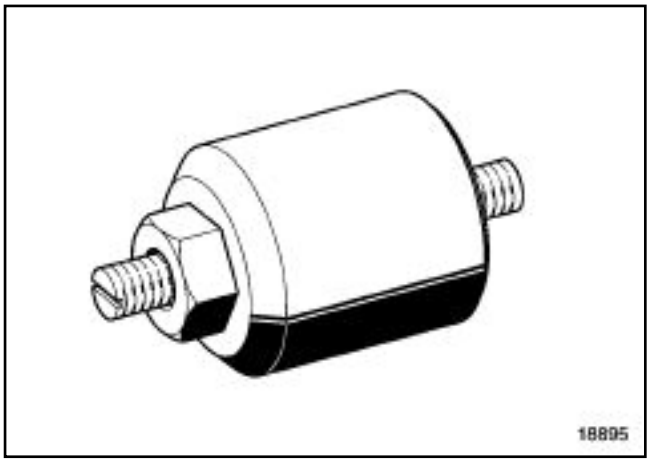 18895	**Mot. 1632**	00 00 163 200	Camshaft oil seal fitting tool (timing end).
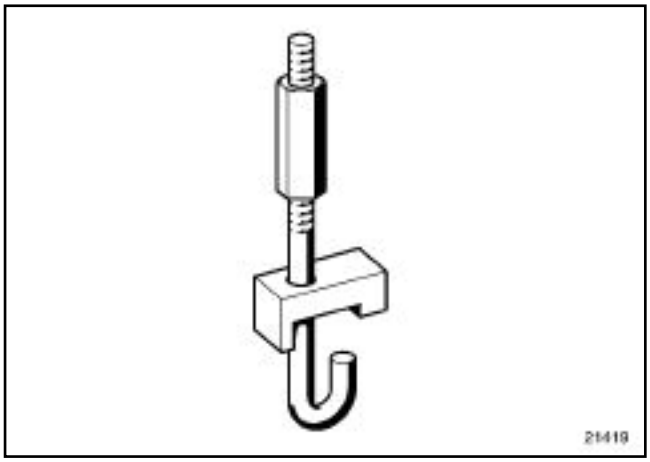 21419	**Mot. 1638**	00 00 163 800	Accessories belt tension tool.

Illustration	Tool number	Tool part number	Description
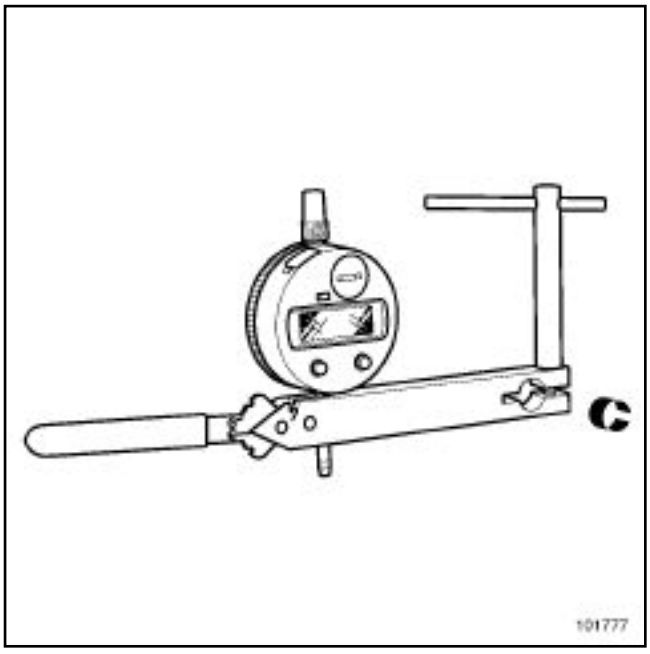 101777	**Mot. 1666**	00 00 166 600	Balancing shaft timing tool.
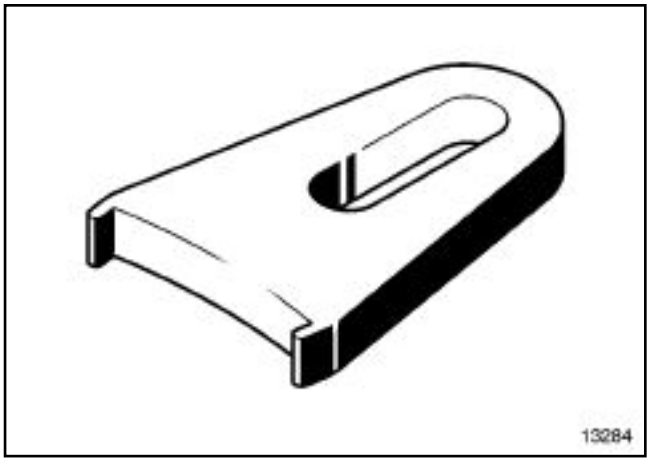 13284	**Mot. 1677**	00 00 167 700	Flywheel locking tool.
	Mot. 1714	77 11 381 714	Adapter for **Mot. 1586** for crankshafts with M14 thread hole.

Illustration	Tool number	Tool part number	Description
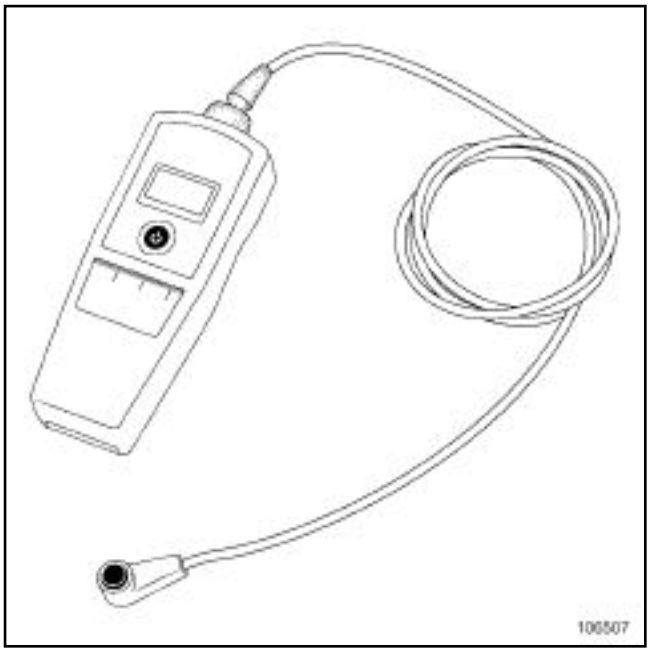 106507	**Mot. 1715**	77 11 381 715	Frequency meter for belt tension.
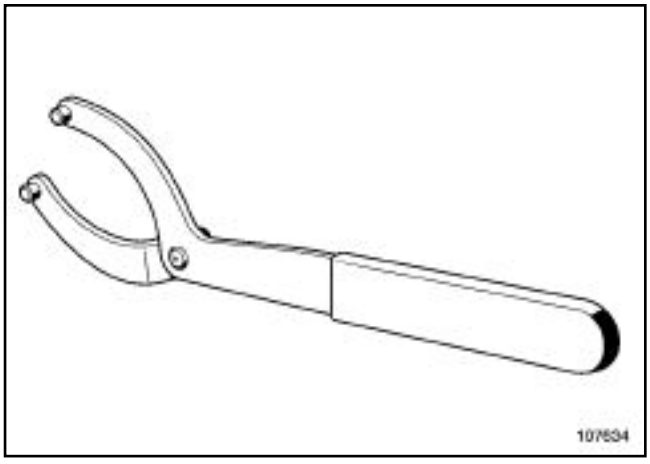 107634	**Mot. 1729**	77 11 381 729	E G R valve removal spanner.

Illustration	Tool number	Tool part number	Description
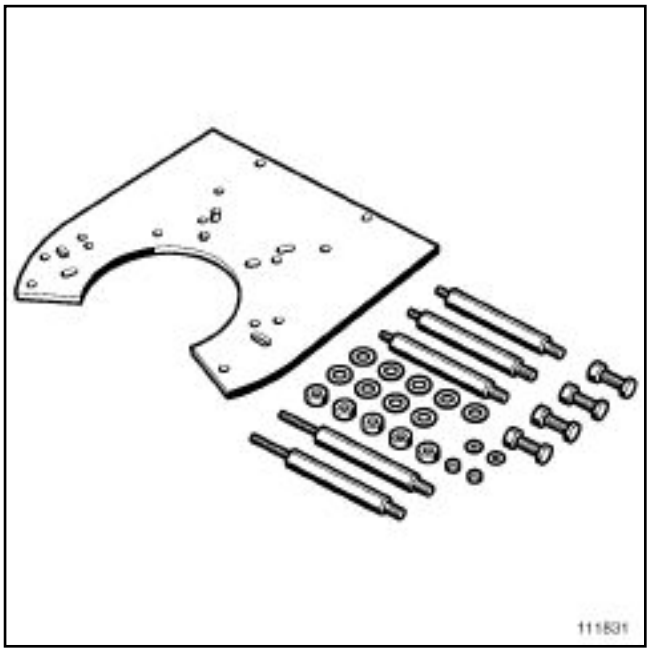 111831	**Mot. 1723**	77 11 381 723	Engine stand.
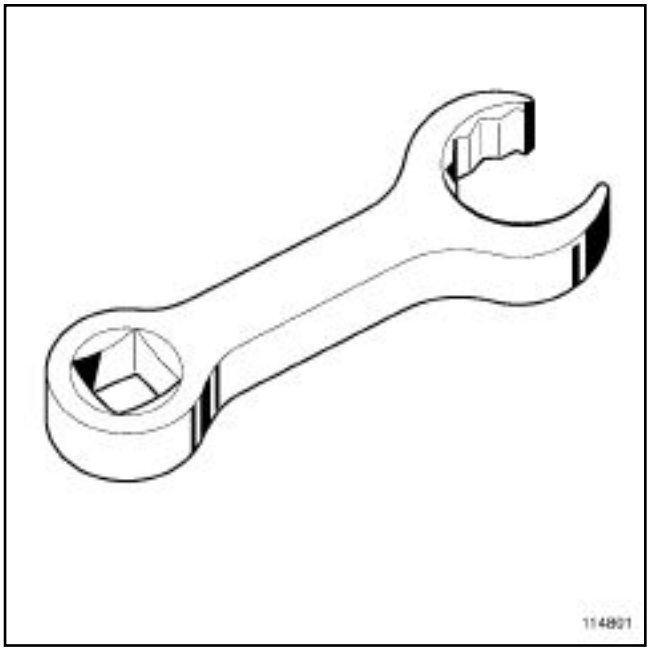 114801	**Mot. 1746**	77 11 381 746	Offset spanner for high pressure pipes

Illustration	Tool number	Tool part number	Description
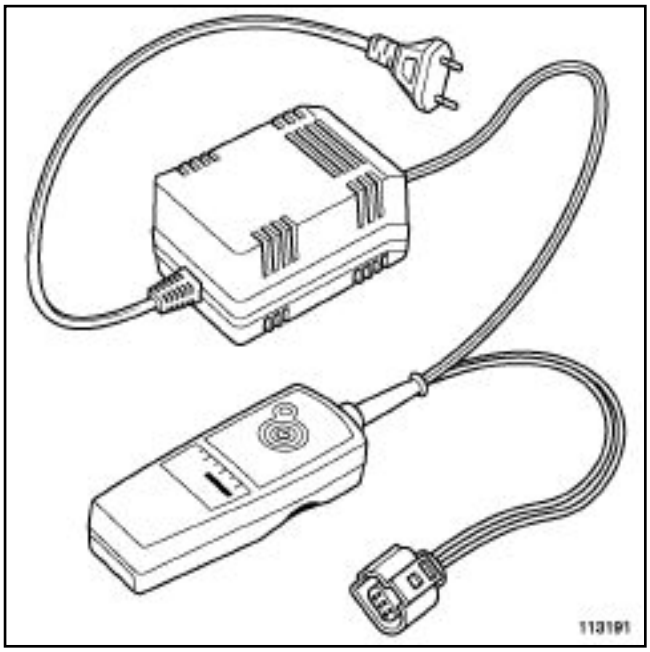 113191	**Mot. 1757**	77 11 381 757	EGR valve cleaning tool.
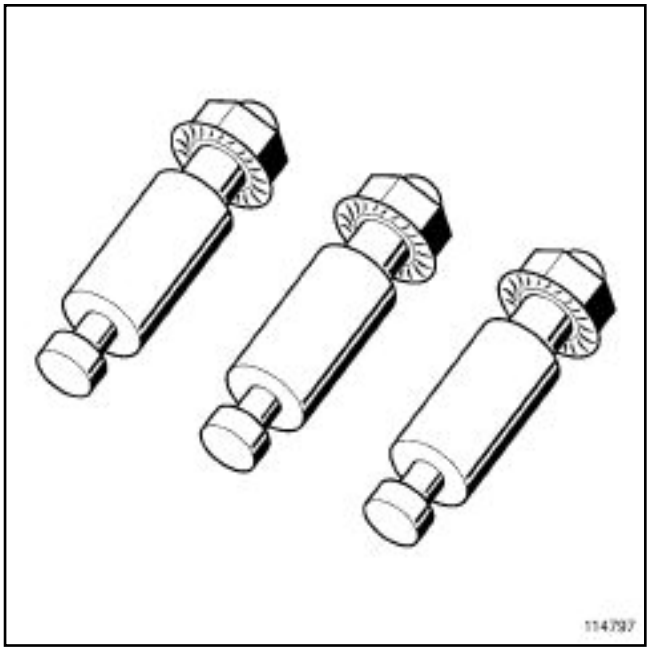 114797	**Mot. 1768**	77 11 381 768	High pressure pump sprocket extractor claws.

Illustration	Tool number	Tool part number	Description
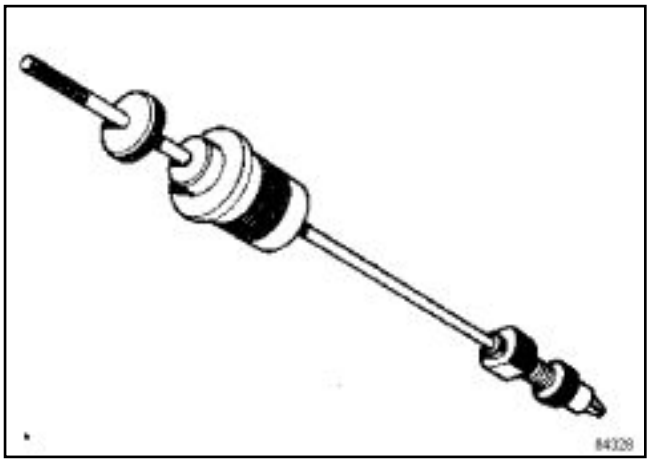 84328	**Emb. 880**	00 00 088 000	Pin extractor.
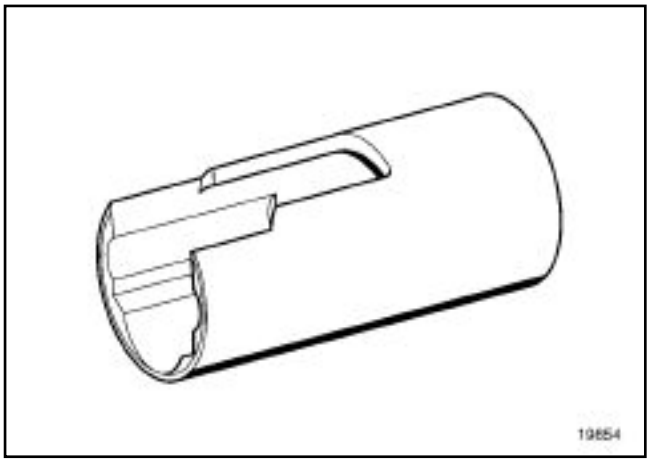 19854	**Emb. 1596**	00 00 159 600	24mm socket.

Illustration	Tool number	Tool part number	Description
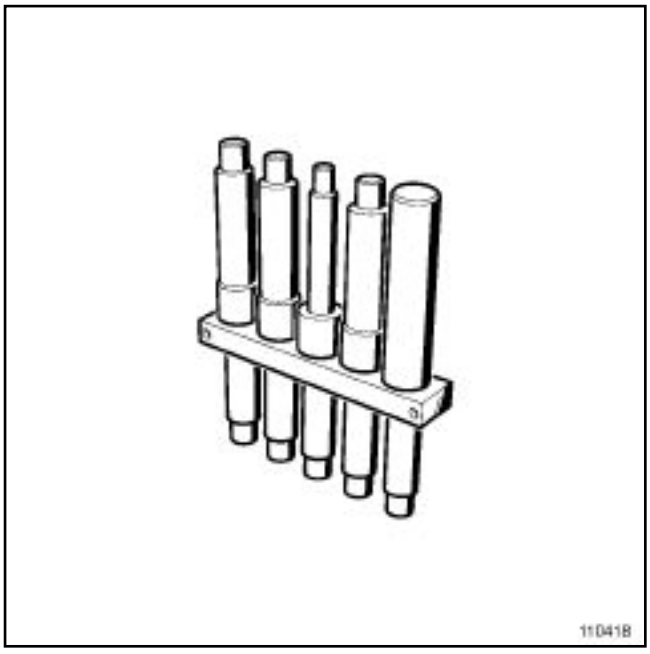 110418	**Emb. 1780**	77 11 381 780	Clutch centring device.
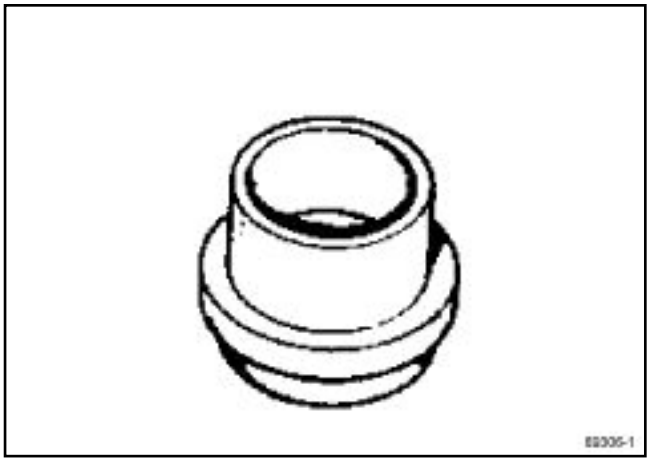 69306-1	**Rou. 15-01**	00 01 331 601	Protective end piece.

Illustration	Description
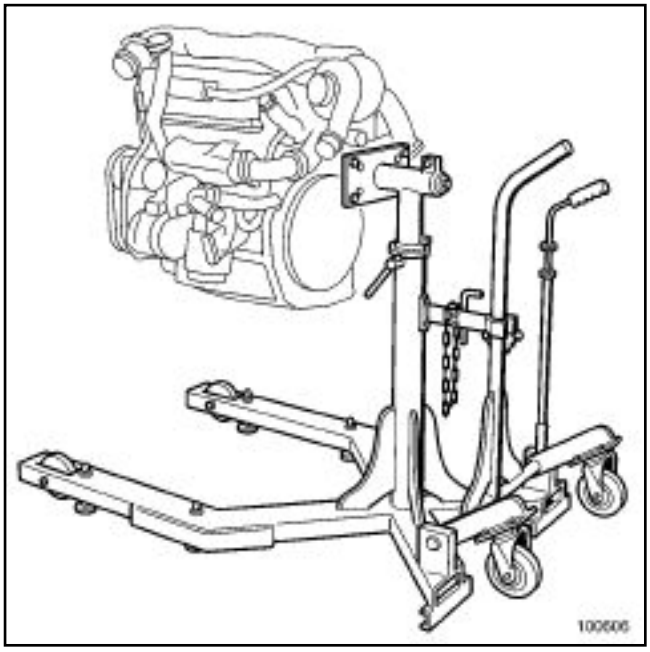 100606	Engine stand.
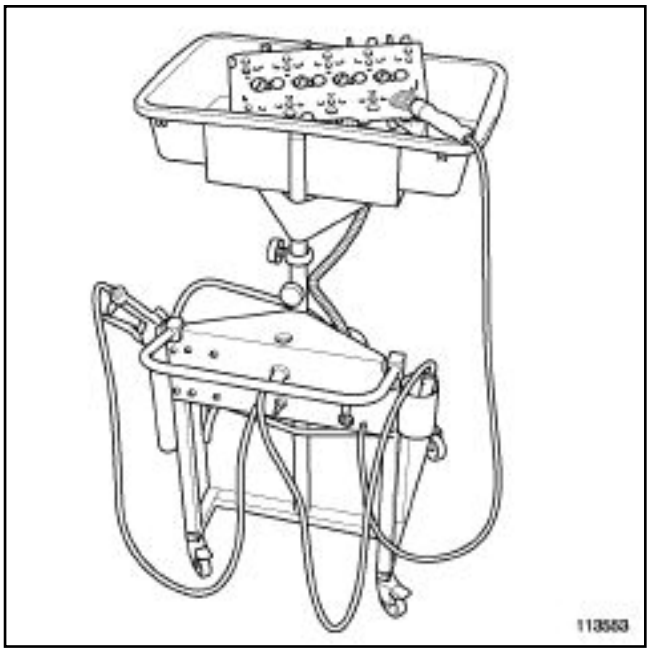 113553	Cleaning bench.

Illustration	Description
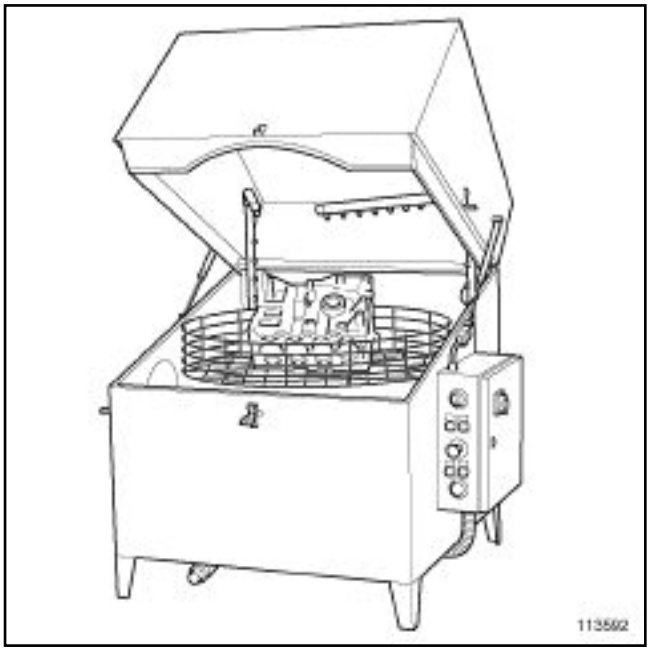 113592	Cleaning fountain.
	Portable crane.
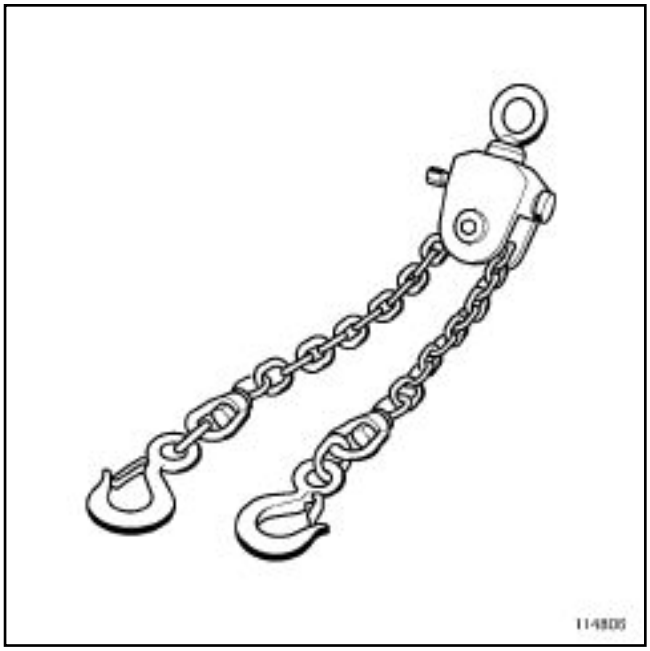 114806	Load positioner.

Illustration	Description
114792	Relieved thread kit.
114790	Stud extractor kit.

Illustration	Description
114786	Bearing extractor kit.
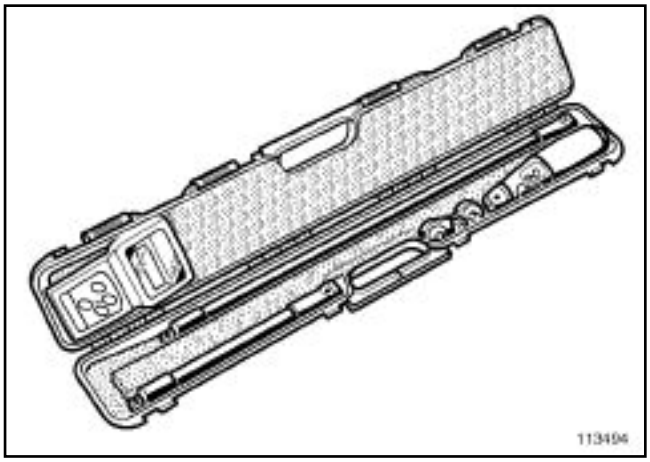 113494	Torque/angle torque wrench.

Illustration	Description
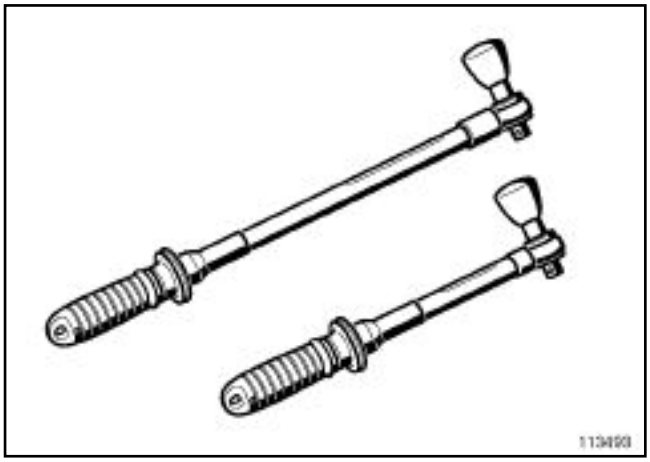 113493	Torque wrench.
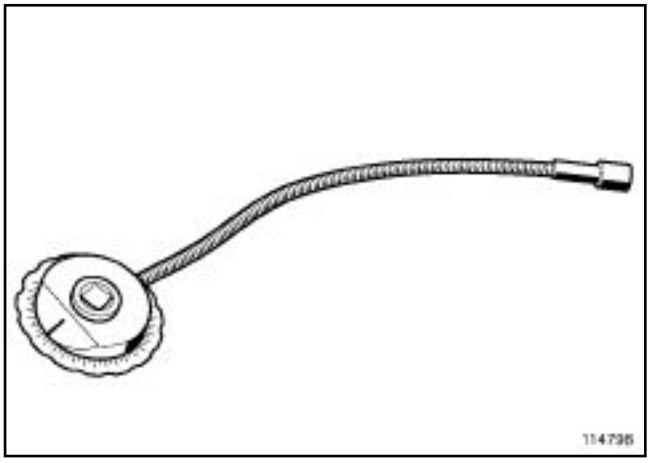 114798	Bolt tightening gauge (angular measuring type).

Illustration	Description
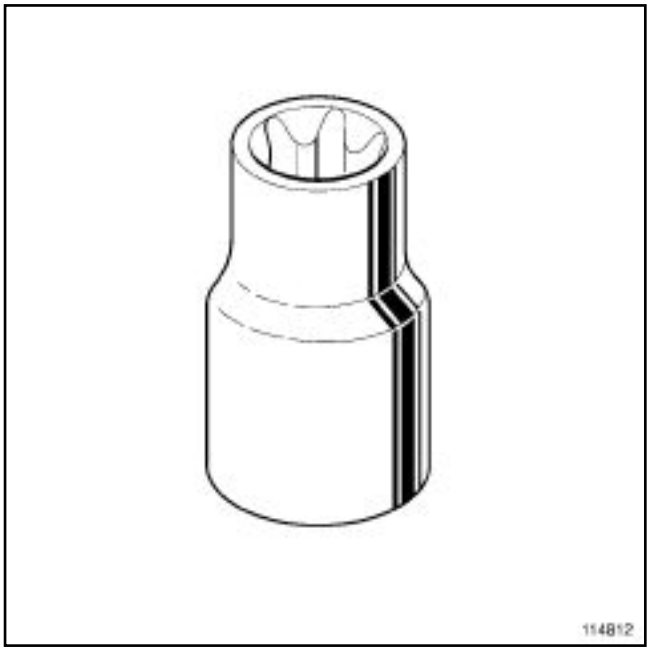 114812	Standard 1/2" (12.7mm) square drive 8/12/14 female torx socket .
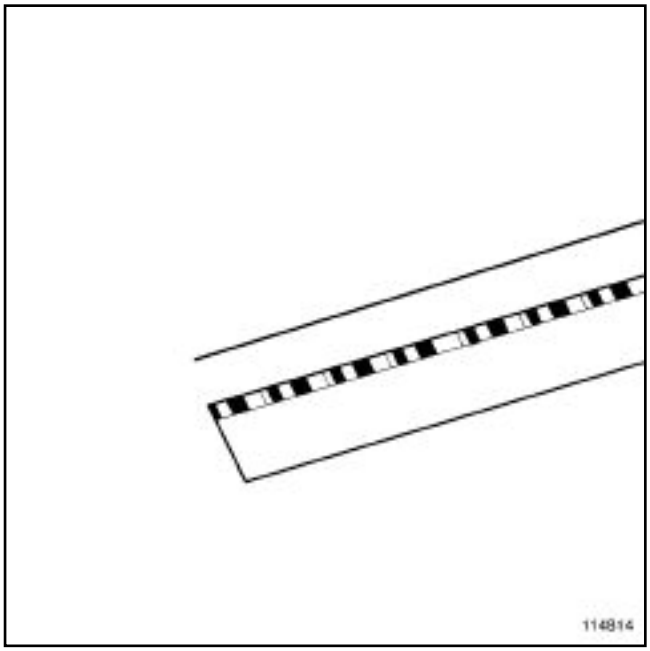 114814	Radial play measuring tape.
	Oil change end piece fitted with an **8mm** square drive
	Engine oil change wrench
	Pair of protective gloves
	Protective goggles
	Tool for checking the valve spring loading

Illustration	Description
	Indelible marker
	Brushes with plastic or non-scratch metal (brass) bristles
	Compressed air gun
	Pressure/vacuum pump
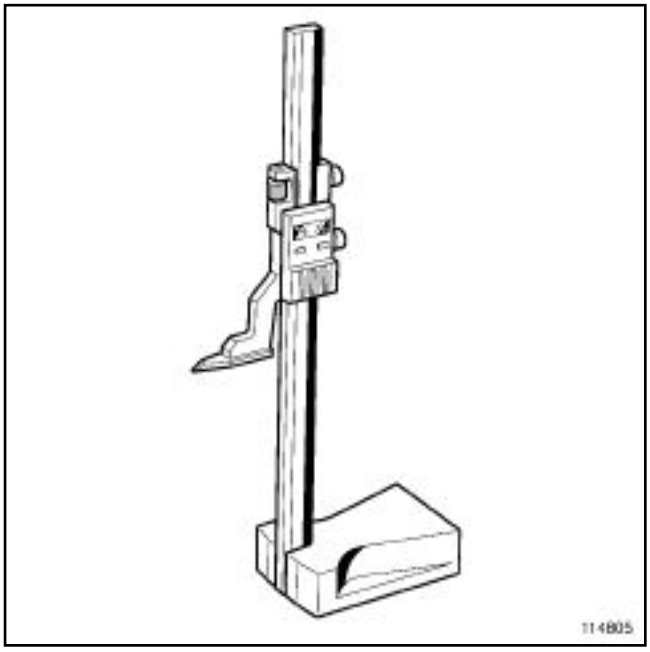 114805	Marking gauge

Illustration	Description
114791	Sliding calliper.
114783	

Illustration	Description
 114789 114782	Depth gauge

Illustration	Description
114787	Micrometer.
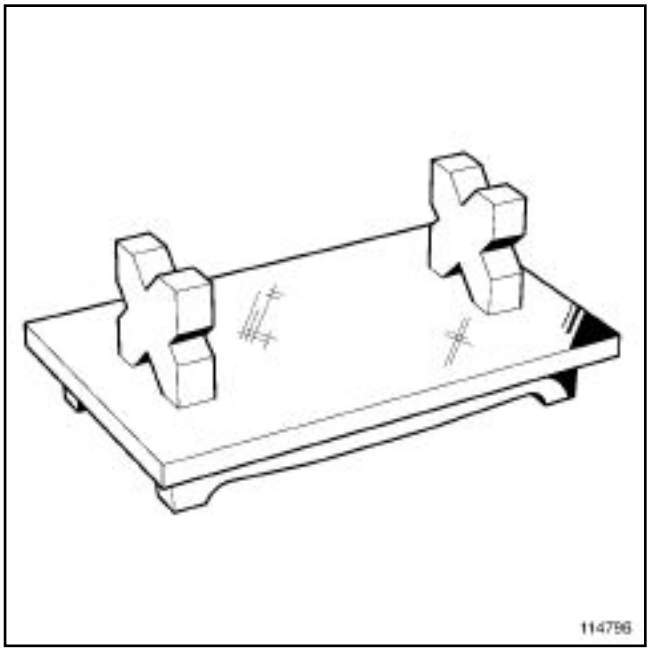 114796	Body jig bench and a pair of v-blocks.

Illustration	Description
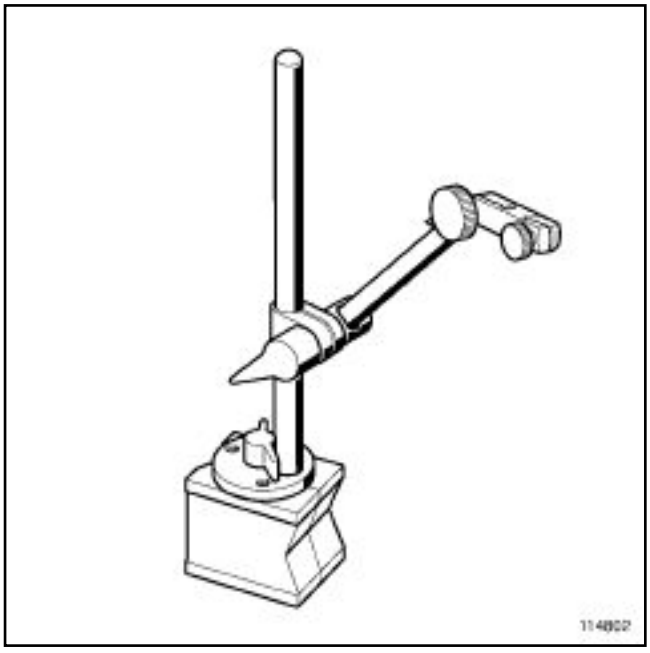 114802	Magnetic holder.
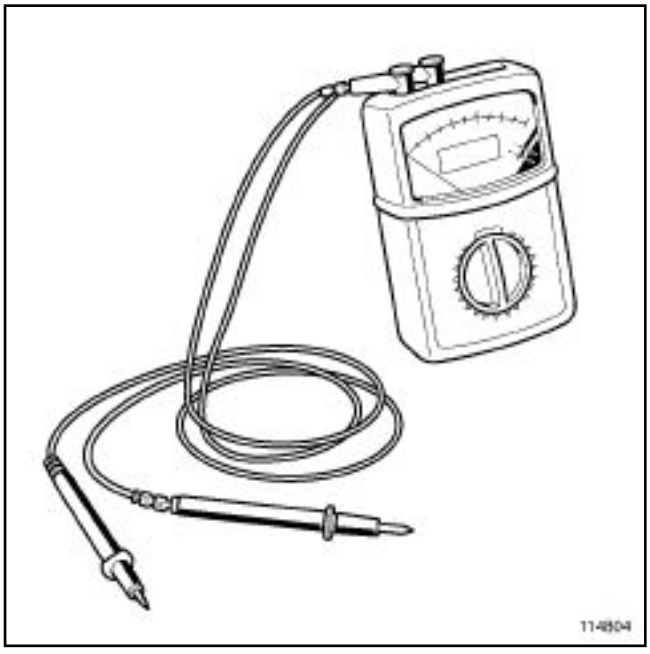 114804	Multimeter.

Illustration	Description
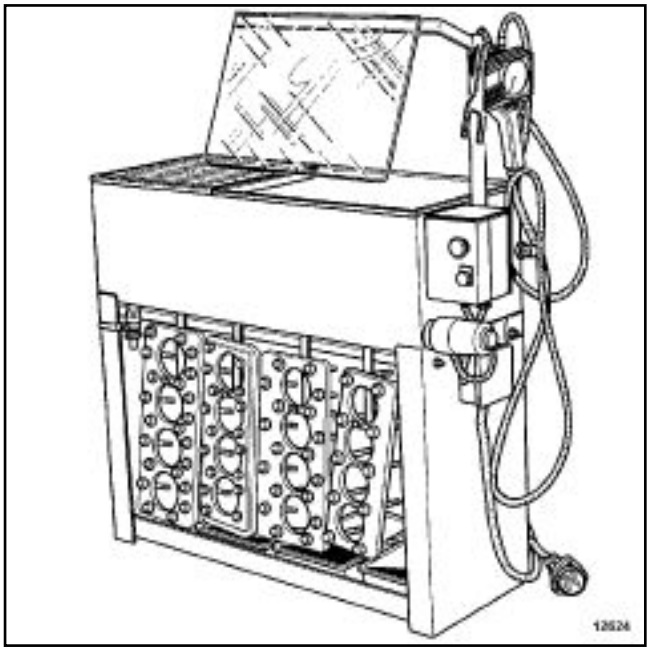 12624	Cylinder head testing tool.
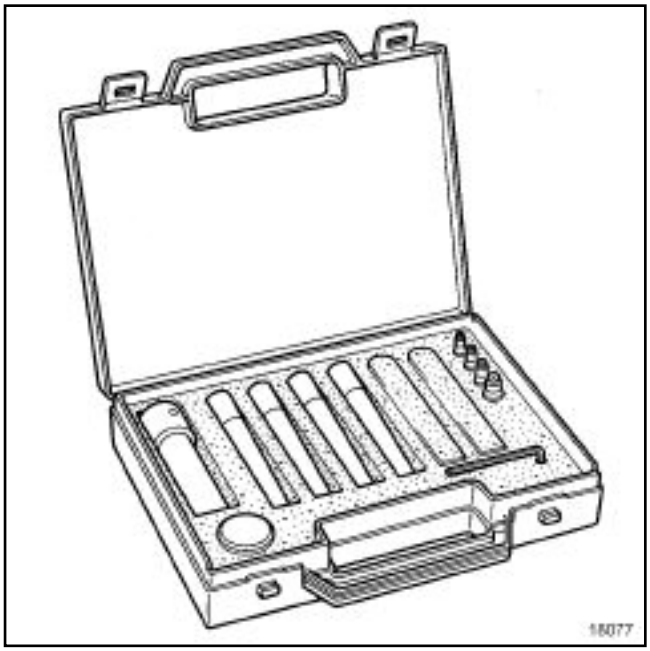 18077	Toolkit for fitting valve stem seals

Illustration	Description
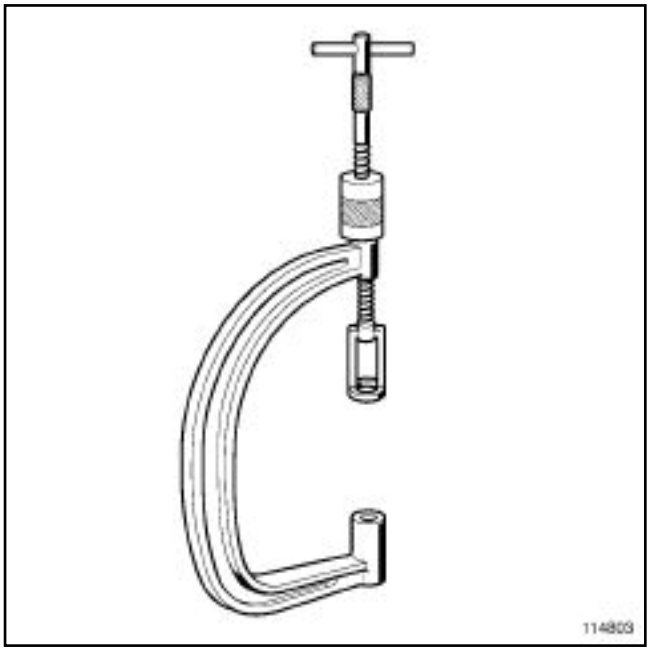 114803	Valve spring compressor.
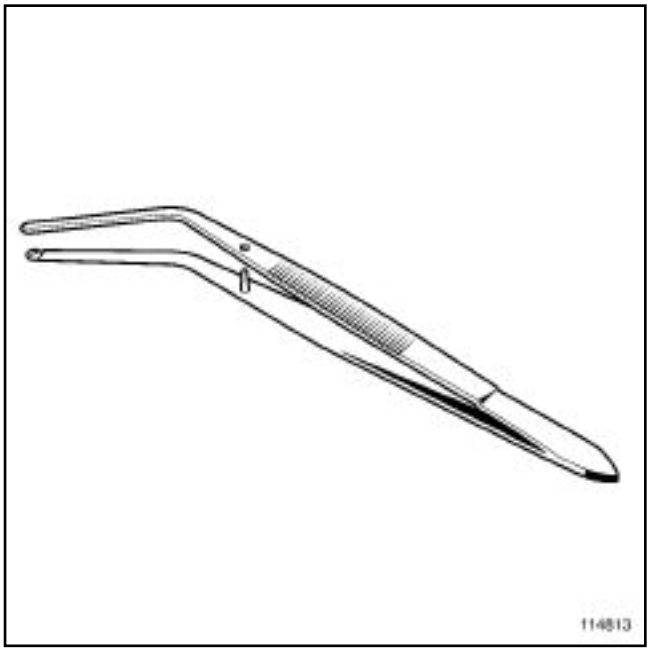 114813	Tweezers.

Illustration	Description
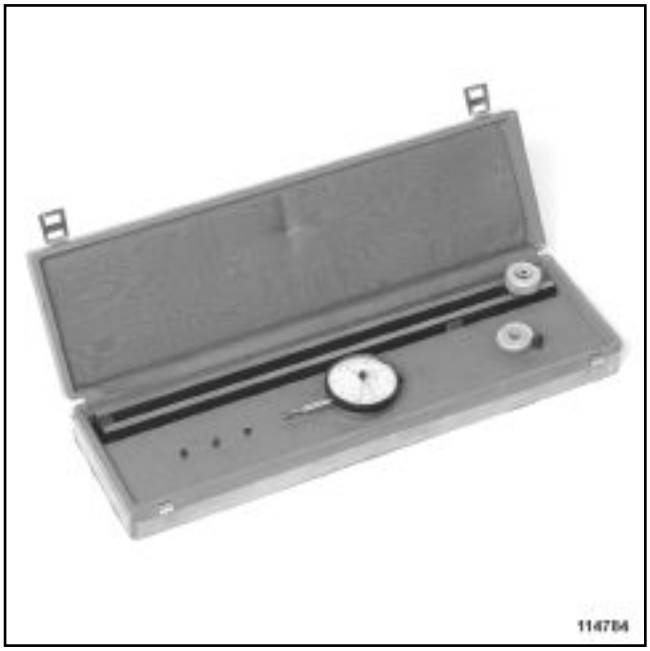 114784	Cylinder head straight edge.
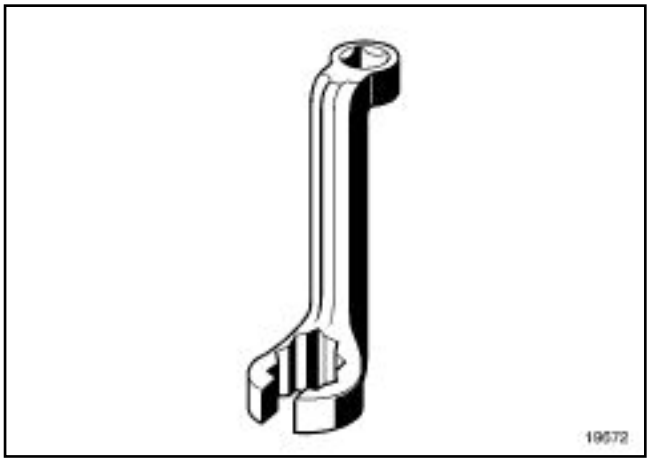 19672	Spanner for the high pressure pipes.

Illustration	Description
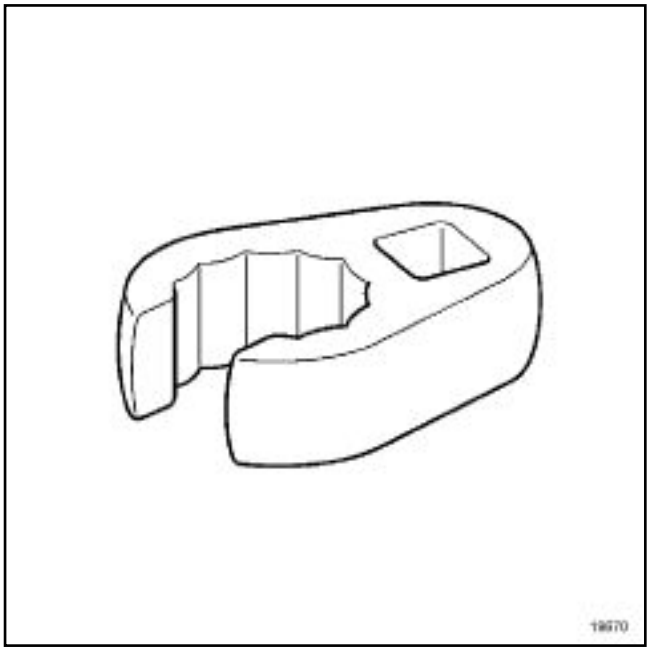 19670	Crow foot spanner.
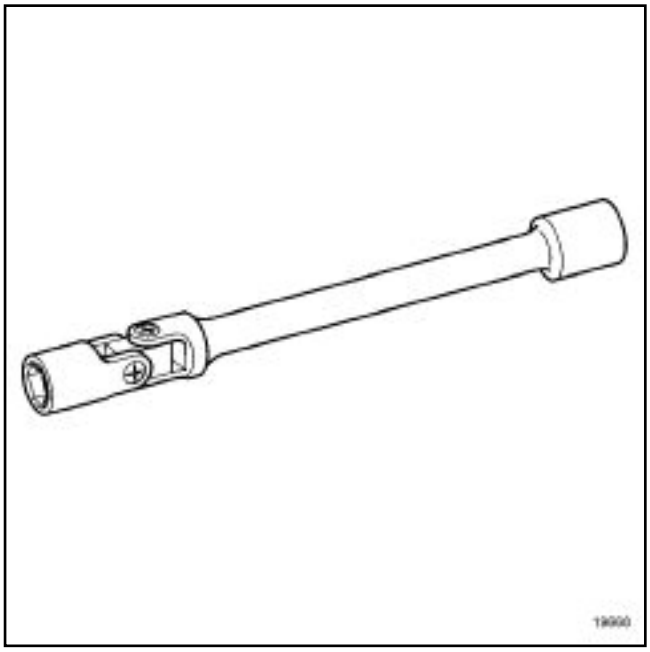 19668	Wrench with hinge for heater plugs.

Illustration	Description
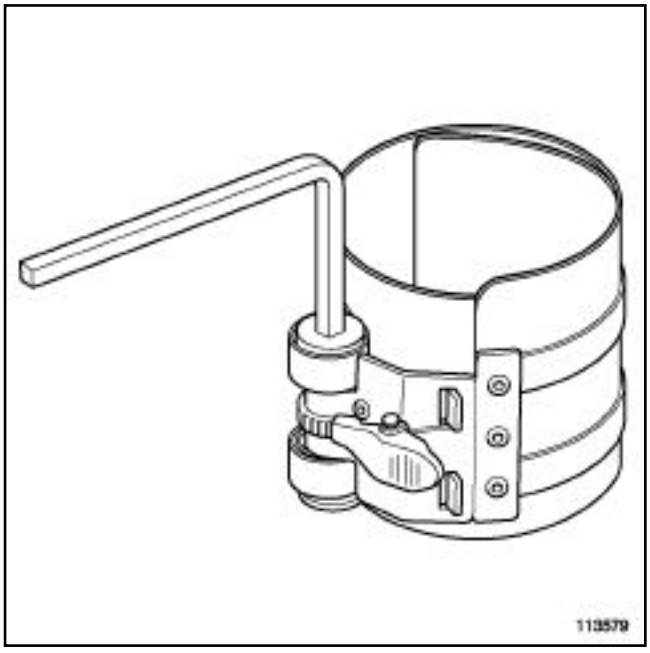 113579	Ring for fitting pistons in the cylinder block.
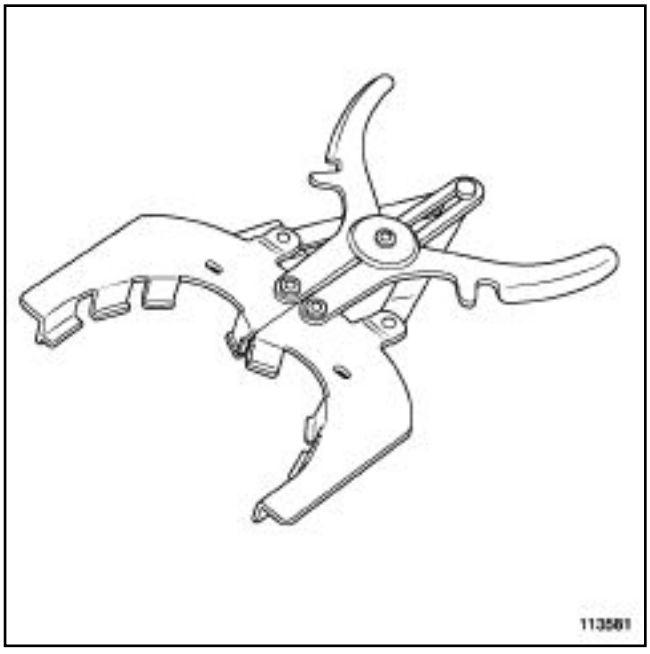 113581	Tool for removing and refitting piston rings.

Illustration	Description
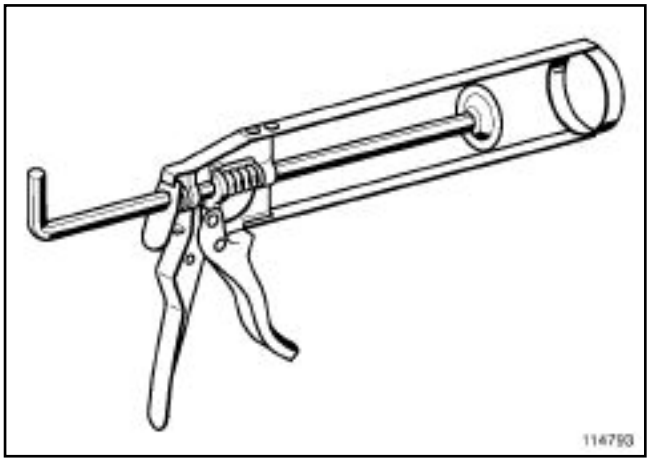 114793	Gun for adhesive silicone seal cartridges.
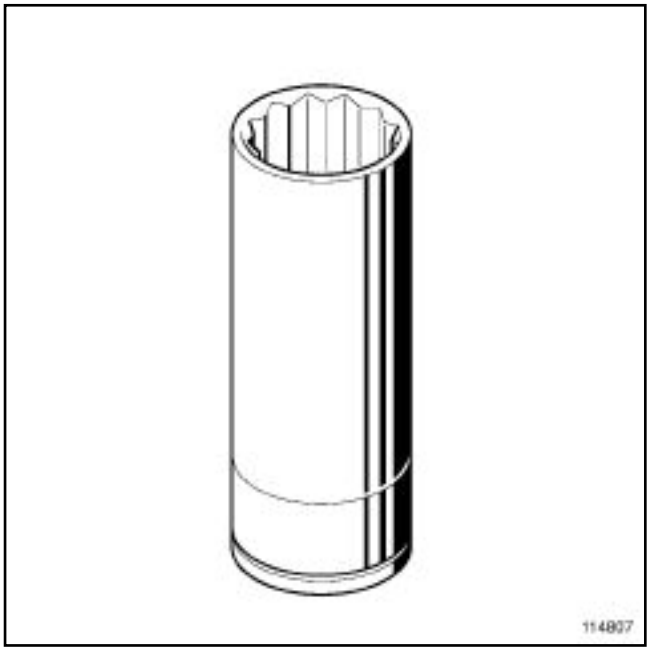 114807	Standard 1/2" 22mm long socket (12.7mm square drive)

Illustration	Description
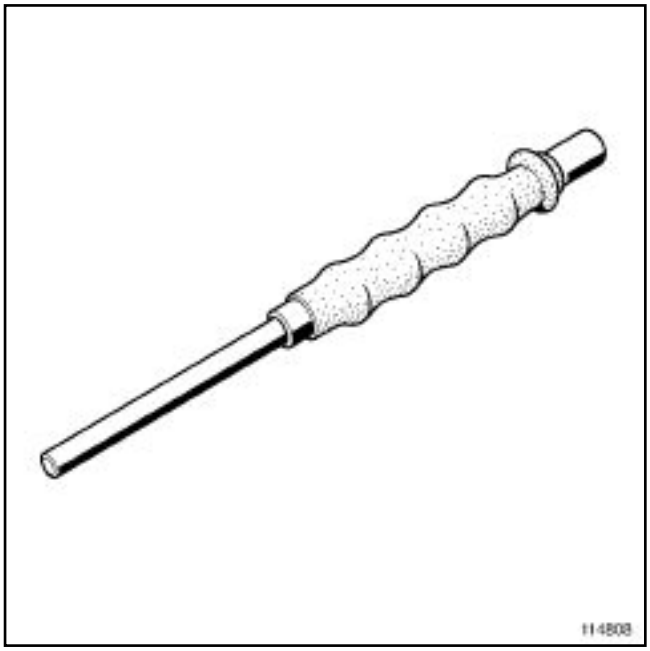 114808	Roll pin punch.

Illustration	Description
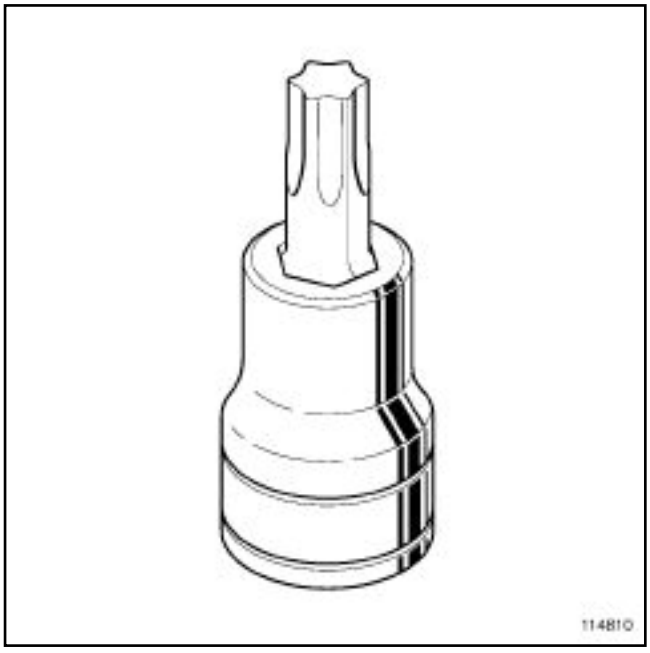 114810	Male torx socket.
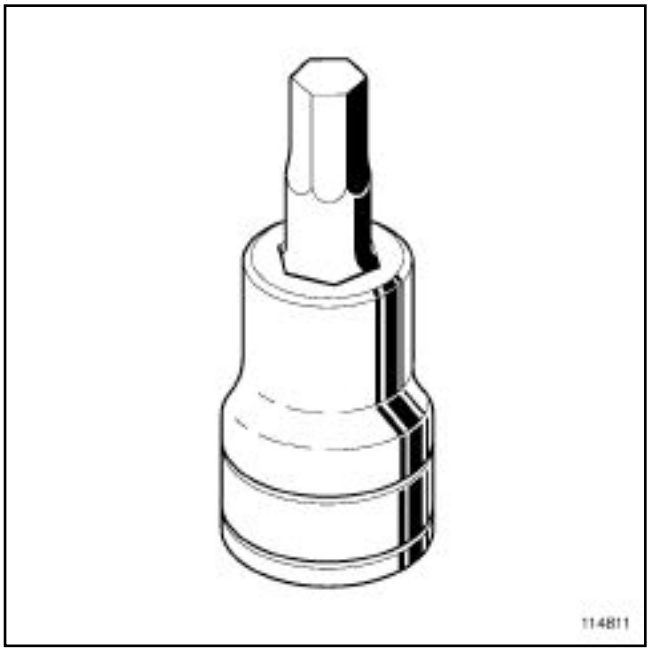 114811	Hexagon drive socket.

Special tooling required	
Mot. 1378	Engine support studs X & Y for use with stud A for Desvil engine support
Mot. 792-03	Engine support plate for Desvil engine stand
Mot. 582-01	Flywheel locking tool.
Mot. 1677	Flywheel locking tool.
Mot. 1723	Engine support for DESVIL engine support stand.
Mot. 1018	Sump plug tool.

I - RECOMMENDATIONS FOR REPAIR

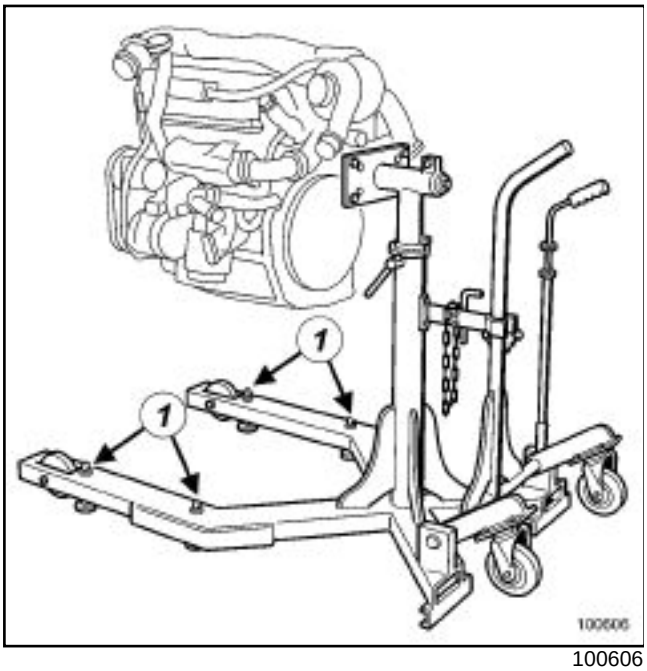

100606

IMPORTANT
In order to work on the engine in complete safety, it is essential to use the new stand, or have the old stand modified by the manufacturer. When the engine is on the stand, it is essential to fit mounting pads (**1**) .

II - EQUIPMENT REQUIRED

- Engine stand,
- Workshop crane,
- Load positioner
- Male torx socket,
- **8mm** Square drive drain plug spanner
- Protective gloves.

III - PREPARING THE ENGINE TO BE MOUNTED ON THE STAND

There are two procedures for securing the engine to the stand:

- by fitting tool (**Mot. 792-03**) to the cylinder block (oil filter end),
- by fitting tool (**Mot. 1723**) to the cylinder block (flywheel end).

1 - Fitting the engine to the stand fitted with Mot. 792-03 (oil filter end)

This mounting refers to the following engines only: K9K 260-270-272-700-702-704-706-710-722-750-752-790.

a - Engine without air conditioning

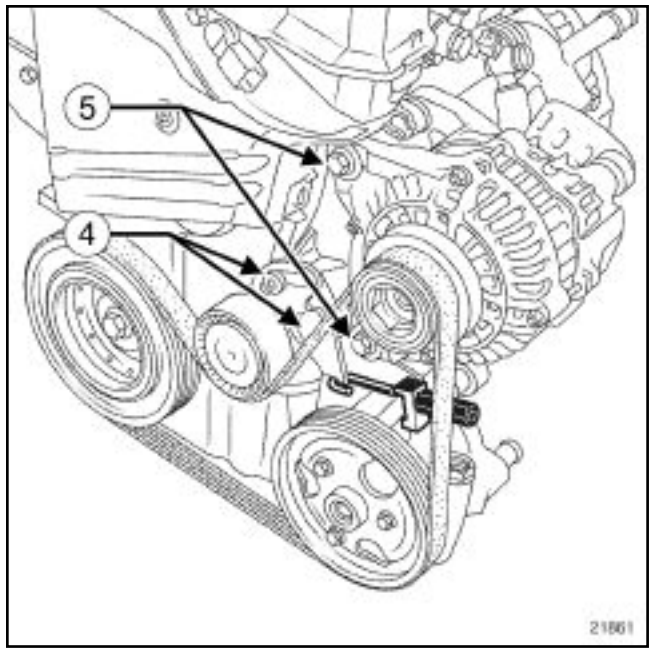

21861

Loosen the tensioning roller mounting bolts (**4**) .

Remove:

- the accessories belt,
- the accessory belt tensioning roller,
- the alternator mounting bolts (**5**) ,
- the alternator.

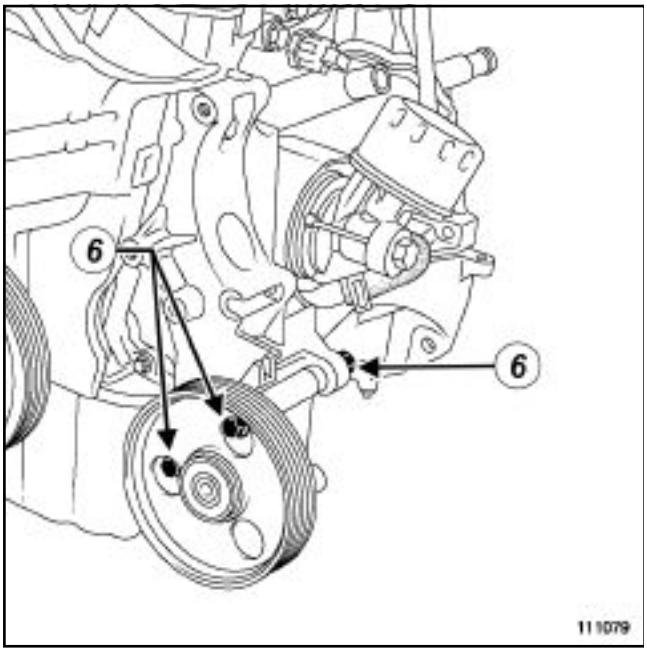

111079

Remove:

- the power-assisted steering pump or dummy pulley mounting bolts (**6**) ,
- the power-assisted steering pump or dummy pulley.

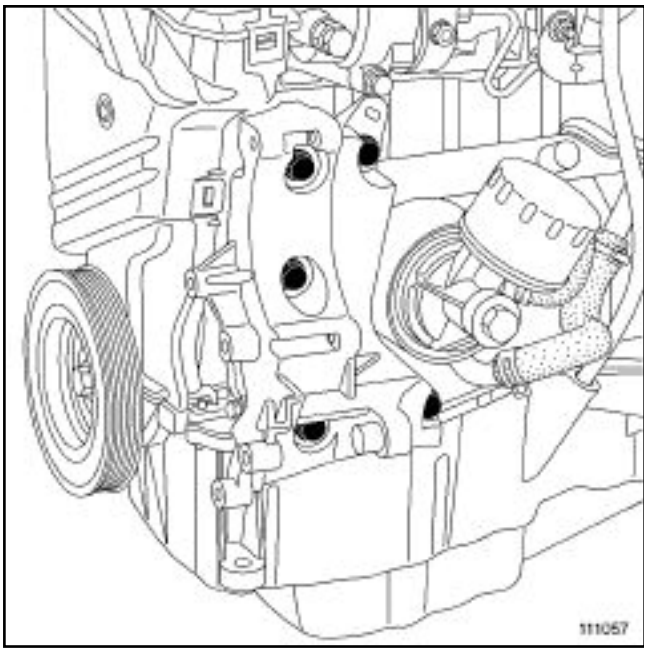

111057

Remove:

- the multifunction support mounting bolts,
- the multifunction support.

b - Engine with air conditioning

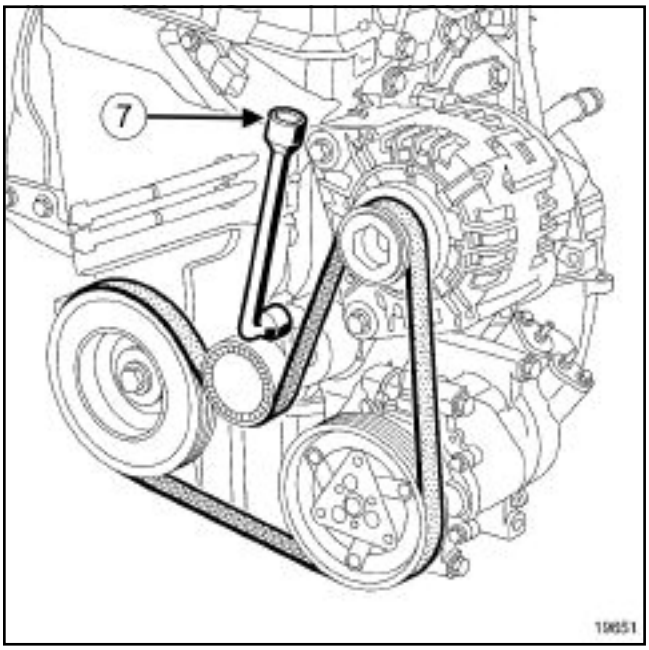

19651

Rotate the tensioning roller using a wrench (**7**) to slacken the belt.

Remove the accessories belt.

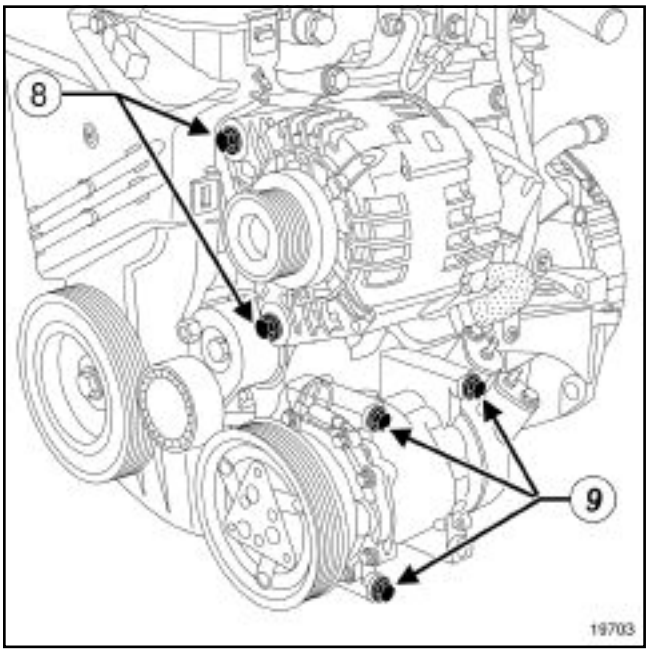

19703

Remove:

- the alternator mounting bolts (**8**) ,
- the alternator,
- the air conditioning compressor mounting bolts (**9**) ,
- the air conditioning compressor.

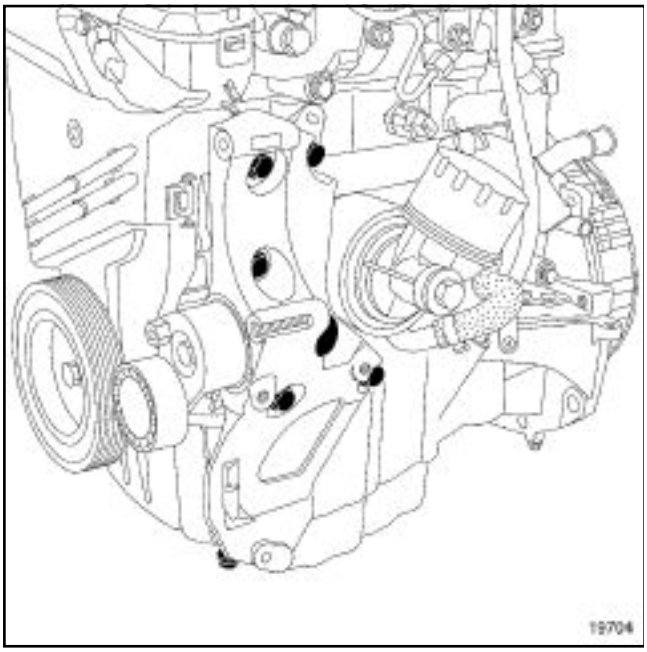

19704

Remove:

- the auto tensioner,
- the multifunction support mounting bolts,
- the multifunction support.

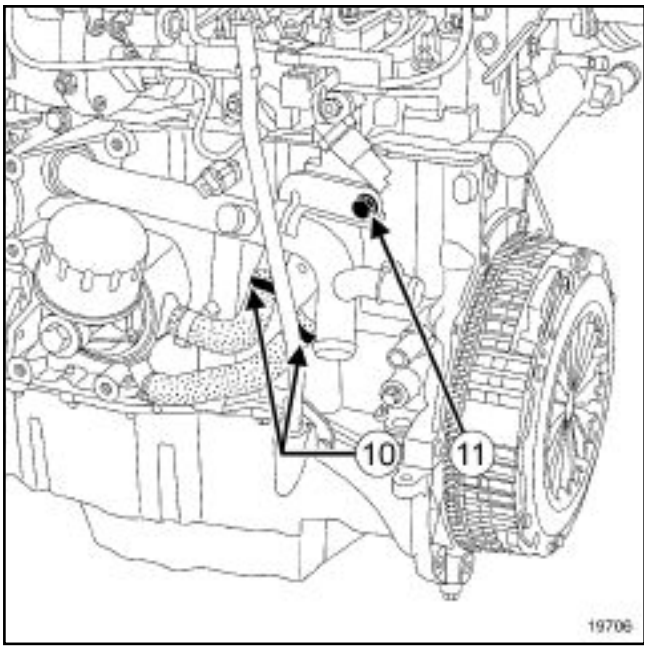

19706

Remove:

- the coolant hoses (**10**) from the coolant pump inlet pipe,
- the coolant pump inlet pipe mounting bolt (**11**) ,
- the coolant pump inlet pipe.

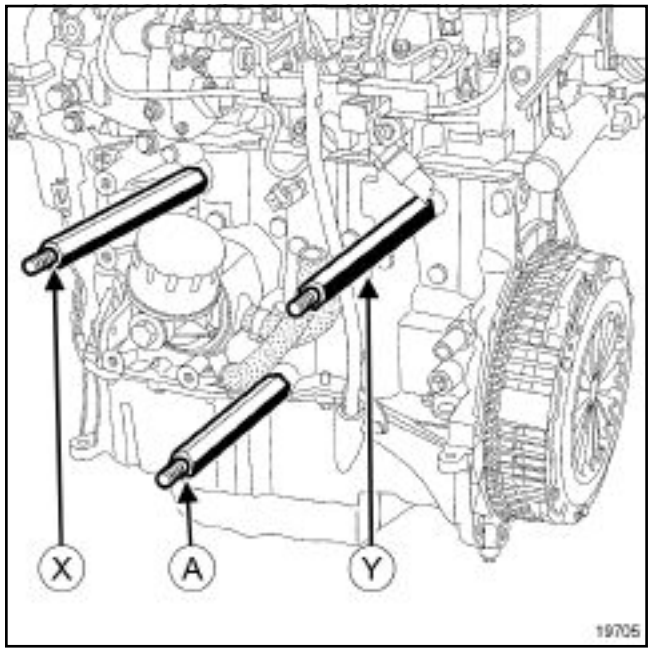

19705

Fit the support studs (**X**) , (**Y**) of **(Mot. 1378)** and the support stud (**A**) of **(Mot. 792-03)** to the cylinder block.

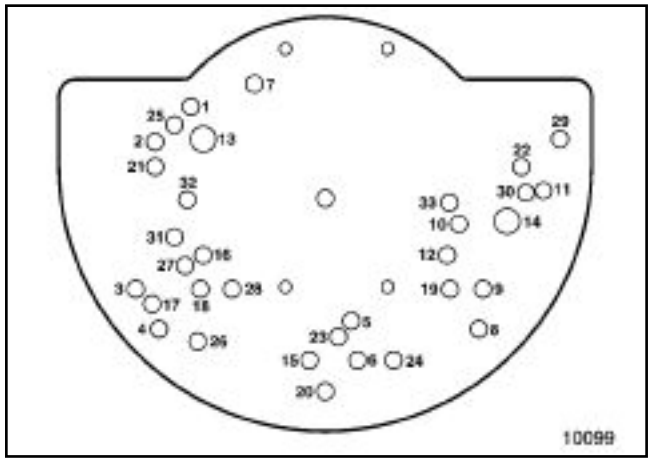

10099

Fit the (**Mot. 792-03**) plate onto the engine fitted with support studs by lining up:

- the support stud ***(A)*** with hole **20** on the plate,
- the support stud ***(X)*** with hole **33** on the plate,
- the support stud ***(Y)*** with hole **32** on the plate.

Fit the engine complete with plate onto the engine stand.

2 - Fitting the engine to the stand fitted with Mot. 1723 (flywheel end)

This fitting relates to all K9K engines .

Note:

The flywheel must be removed on engines with the starter motor at the exhaust end.

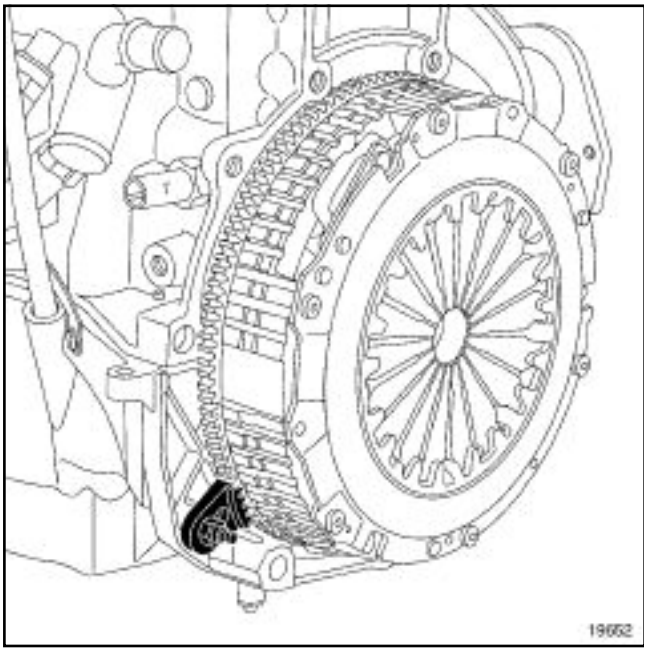

19652

Fit flywheel locking tool **(Mot. 582-01)** or **(Mot. 1677)** .

Remove:

- the clutch pressure plate securing bolt,
- the clutch pressure plate,
- the friction plate.

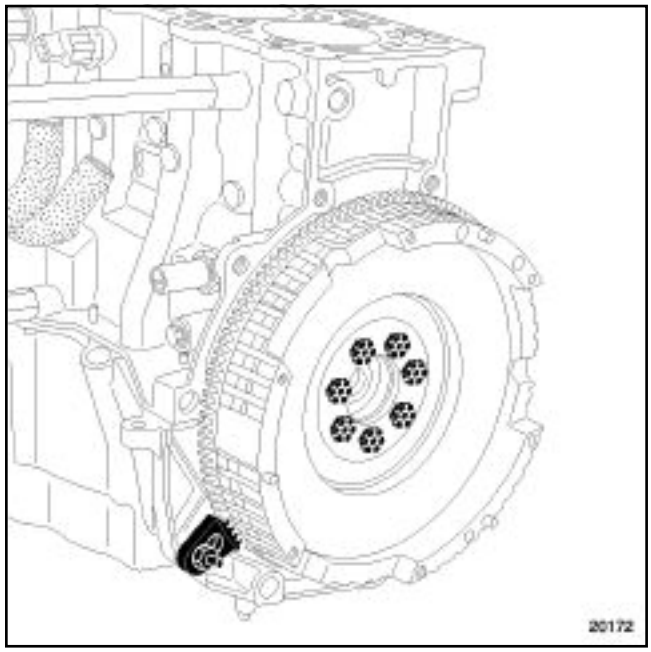

20172

Remove:

- the flywheel mounting bolts,
- the flywheel,
- the flywheel locking tool (**Mot. 582-01**) or (**Mot. 1677**).

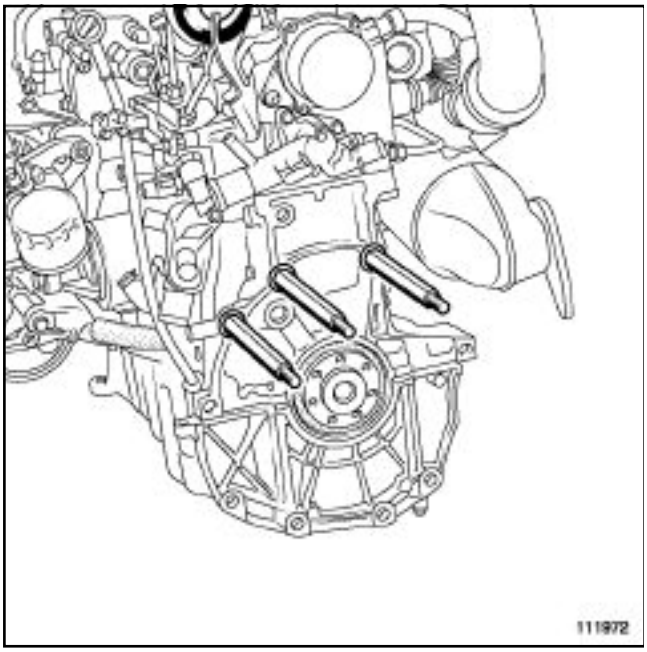

111972

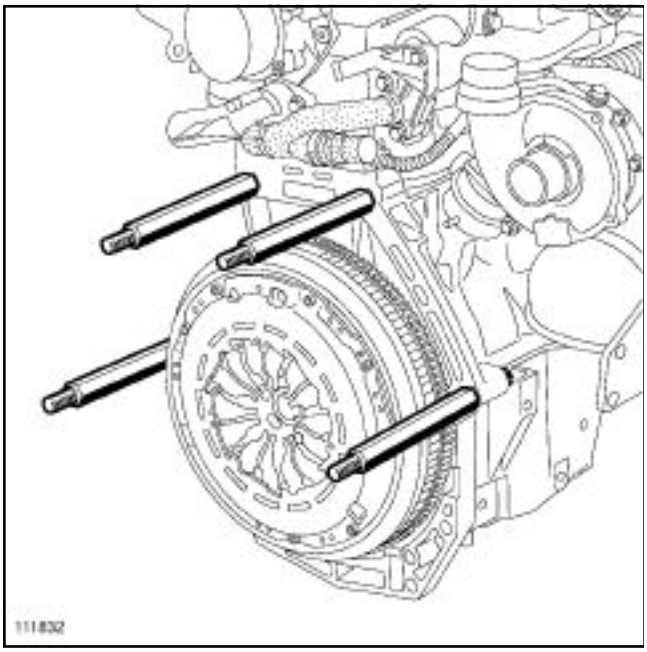

111832

Fit the support stud of **(Mot. 1723)** to the cylinder block.

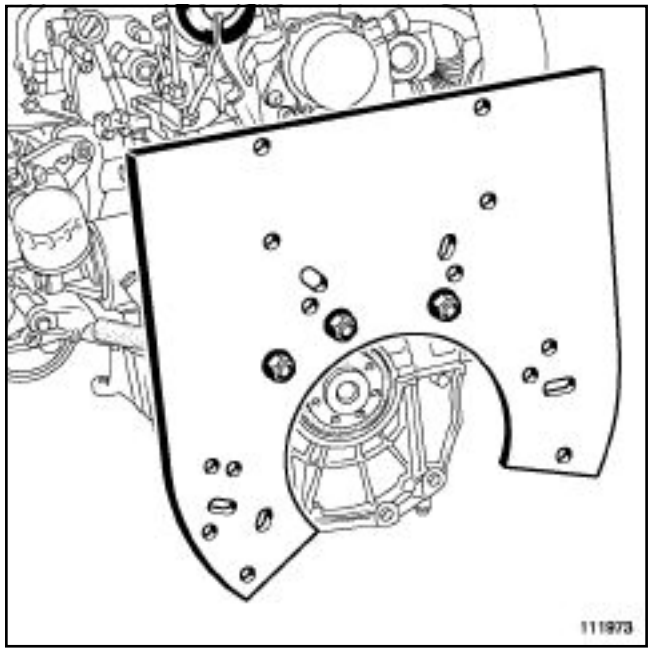

111973

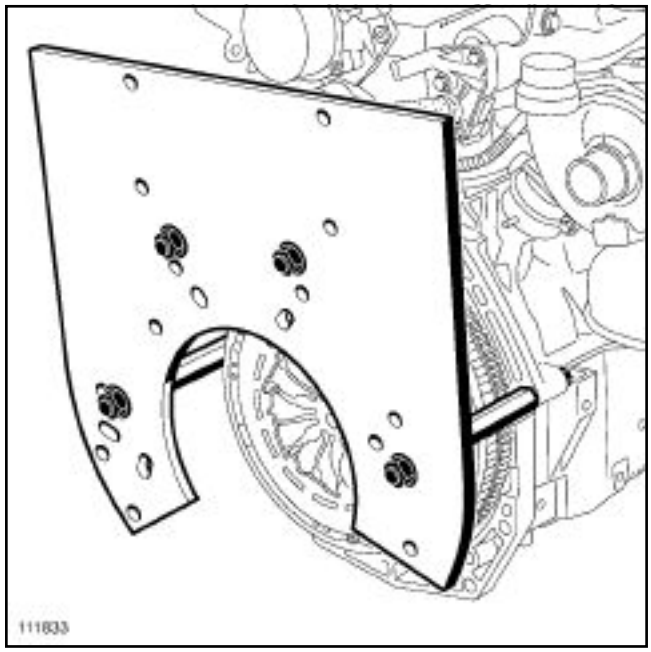

111833

Fit the (**Mot. 1723**) plate onto the engine fitted with support studs by lining up:

- the support studs with holes **5, 6 and 7** on the plate (for engines with starter on the exhaust side),
- the support studs with holes **1, 2, 10 and 12** on the plate (for engines with starter on the oil filter side).

Fit the engine complete with plate onto the engine stand.

Remove the engine wiring harness.

Remove the drain plug from the sump using **(Mot. 1018)** or using **a drain plug spanner (8mm square drive)** .

I - RECOMMENDATIONS FOR REPAIR

IMPORTANT
Wear protective gloves during every operation.

II - EQUIPMENT REQUIRED

- Protective gloves.

III - REMOVAL

1 - Engine without air conditioning

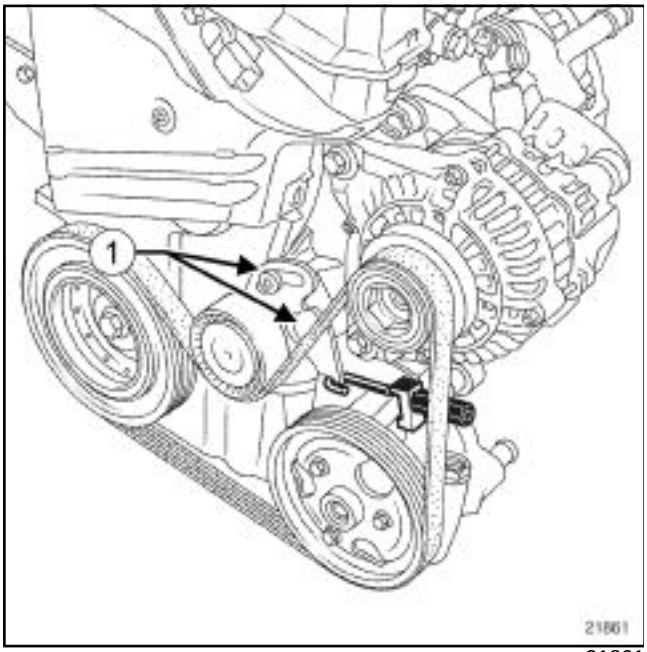

21861

Undo the tensioning roller mounting bolts (**1**) .

Remove:

- the accessories belt,
- the accessories belt tensioning roller.

2 - Engine with air conditioning

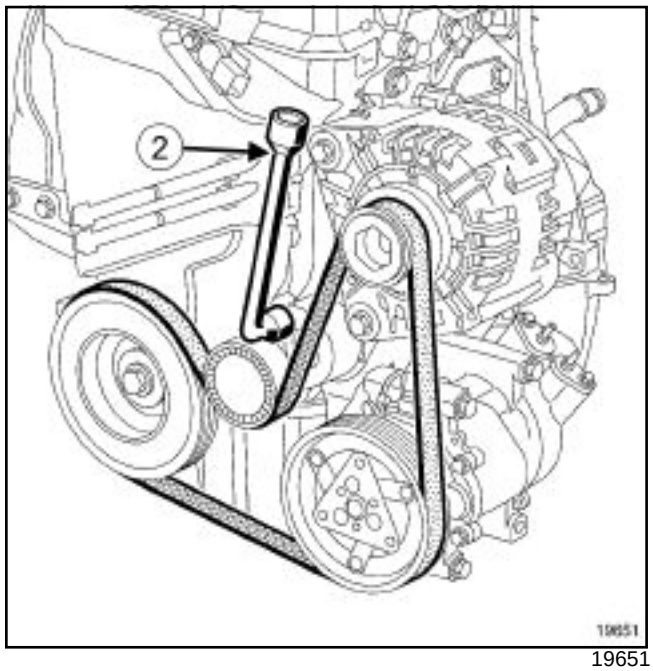

19651

Rotate the tensioning roller using a wrench (**2**) to slacken the belt.

Remove the accessories belt.

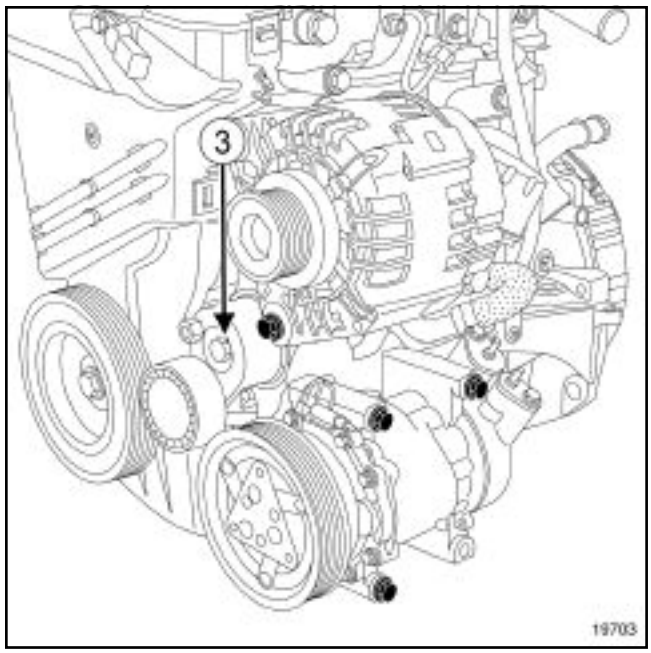

19703

Remove:

- the accessories belt tensioning roller mounting bolt (**3**) ,
- the accessories belt tensioning roller.

Timing - cylinder head: Removal

K9K, and 260 or 270 or 272 or 700 or 702 or 704 or 706 or 710 or 712 or 722 or 724 or 728 or 729 or 750 or 752 or 760 or 762 or 790

Special tooling required	
Mot. 1489	TDC locating pin.
Mot. 1430	Set of 5 crankshaft and camshaft pulley timing pins.
Mot. 582-01	Flywheel locking tool.
Mot. 1677	Flywheel locking tool.
Mot. 1573	Cylinder head support

I - TIMING GEAR REMOVAL

II - GUIDELINES FOR REPAIRS TO THE TIMING GEAR

IMPORTANT
Wear protective gloves during every operation.

III - EQUIPMENT REQUIRED FOR THE TIMING GEAR

- Protective gloves,
- Large screwdriver,
- Allen key (**6mm**),
- Female torx socket (**14**).

IV - REMOVAL

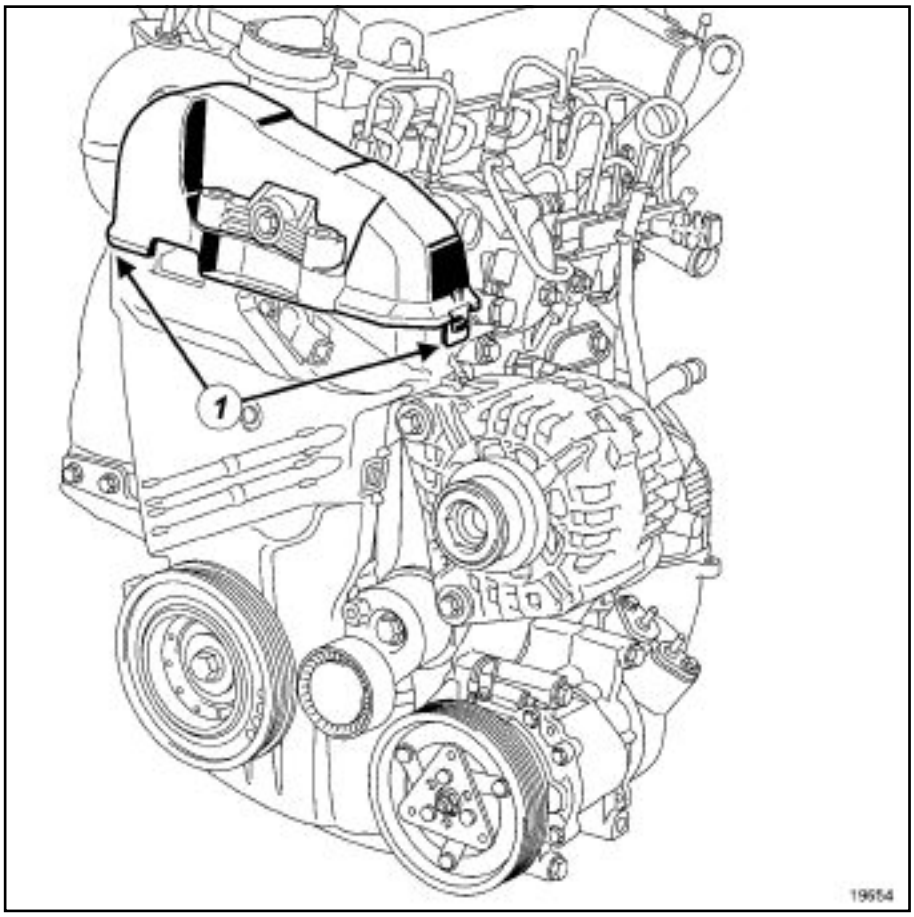

19654

Remove the upper timing cover by unclipping both tabs (**1**) .

Timing - cylinder head: Removal

K9K, and 260 or 270 or 272 or 700 or 702 or 704 or 706 or 710 or 712 or 722 or 724 or 728 or 729 or 750 or 752 or 760 or 762 or 790

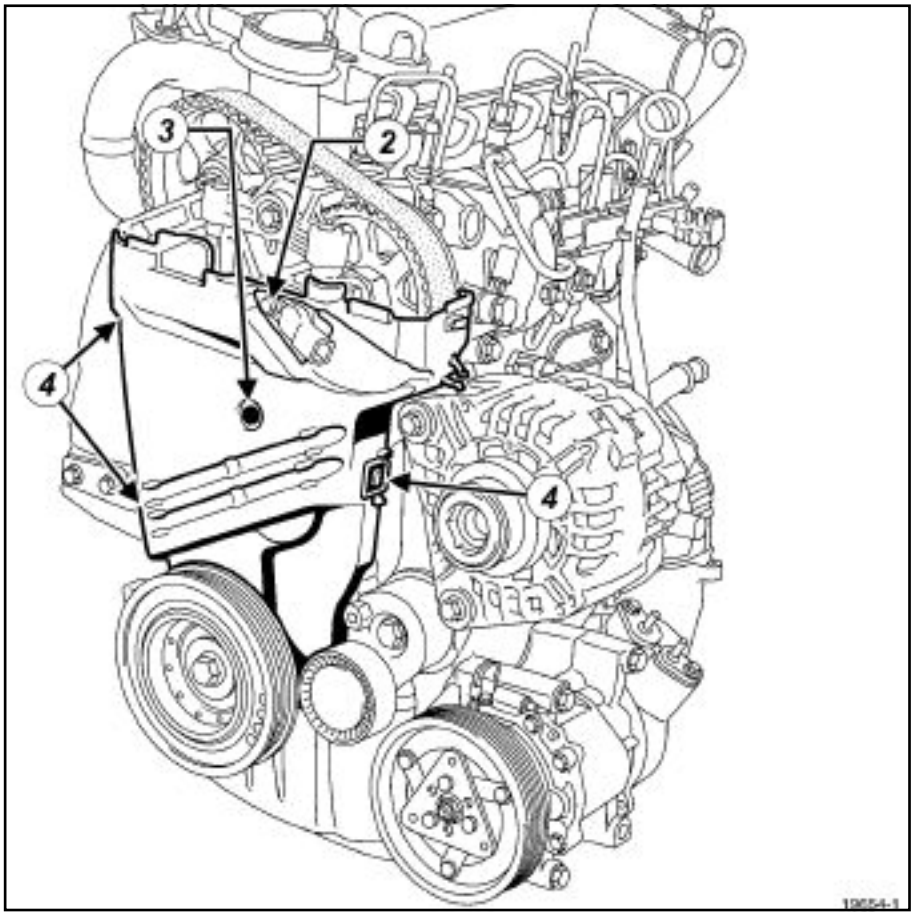

19654-1

Remove:

- the high pressure pump position sensor (**2**) ,
- the plastic bolt (**3**) .

Unclip the three tabs (**4**) .

Remove the lower timing cover.

K9K, and 260 or 270 or 272 or 700 or 702 or 704 or 706 or 710 or 712 or 722 or 724 or 728 or 729 or 750 or 752 or 760 or 762 or 790

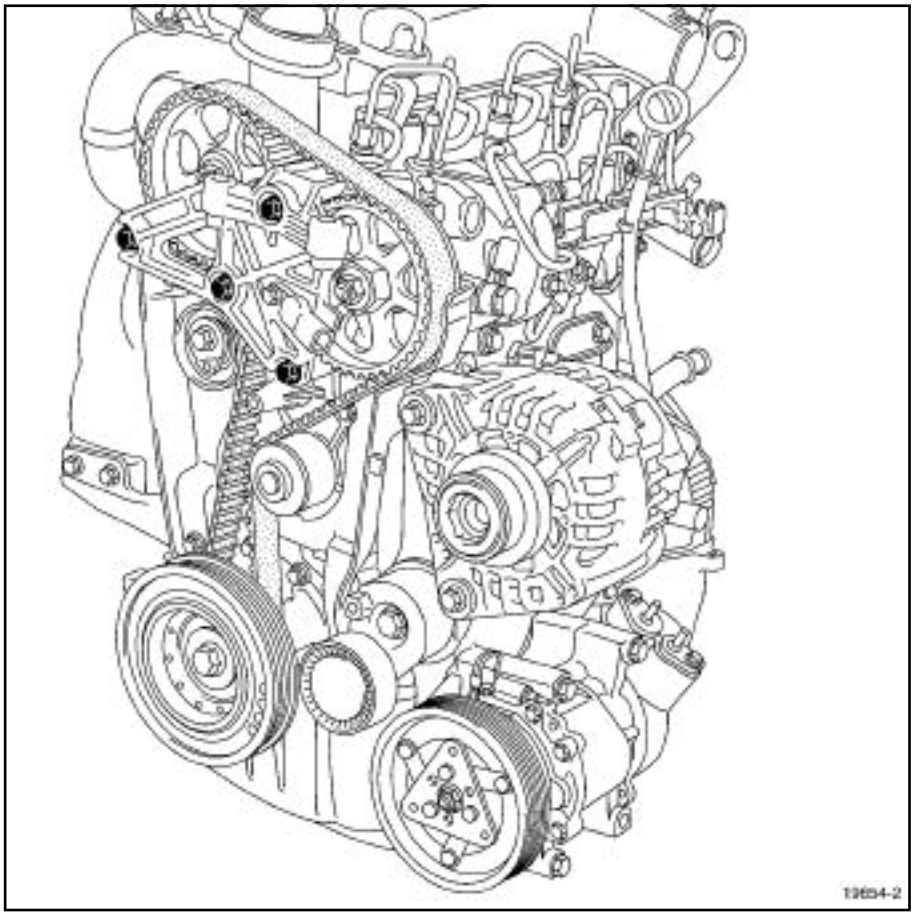

19654-2

Remove the cylinder head suspended mounting.

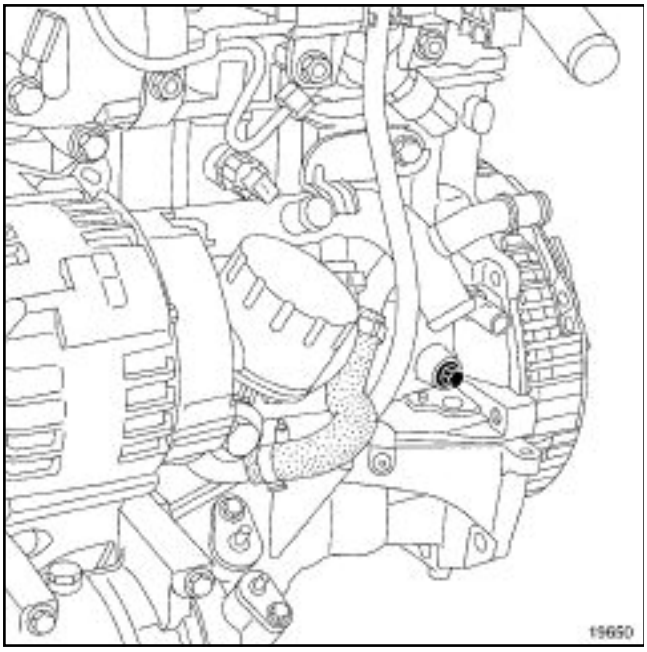

19650

Remove the TDC setting pin plug using a number **14** female torx socket.

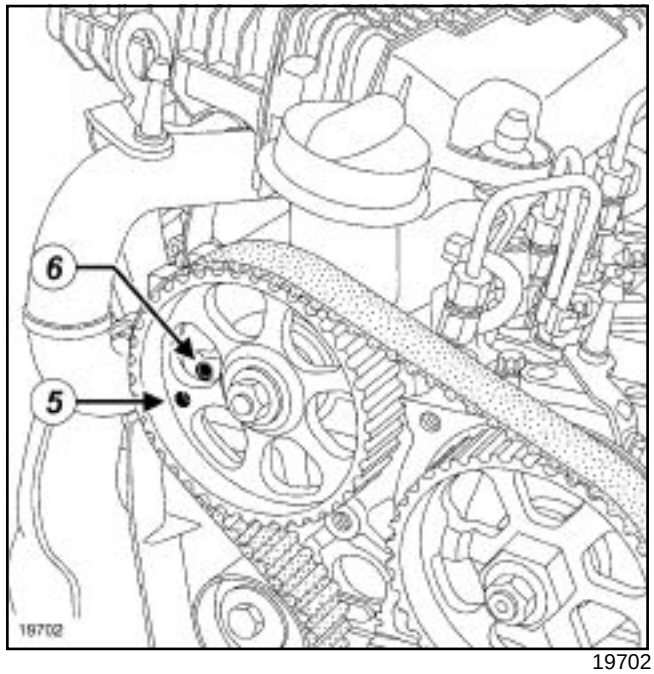

19702

Turn the crankshaft to position the hole (**5**) of the camshaft pulley almost opposite the hole (**6**) in the cylinder head.

K9K, and 260 or 270 or 272 or 700 or 702 or 704 or 706 or 710 or 712 or 722 or 724 or 728 or 729 or 750 or 752 or 760 or 762 or 790

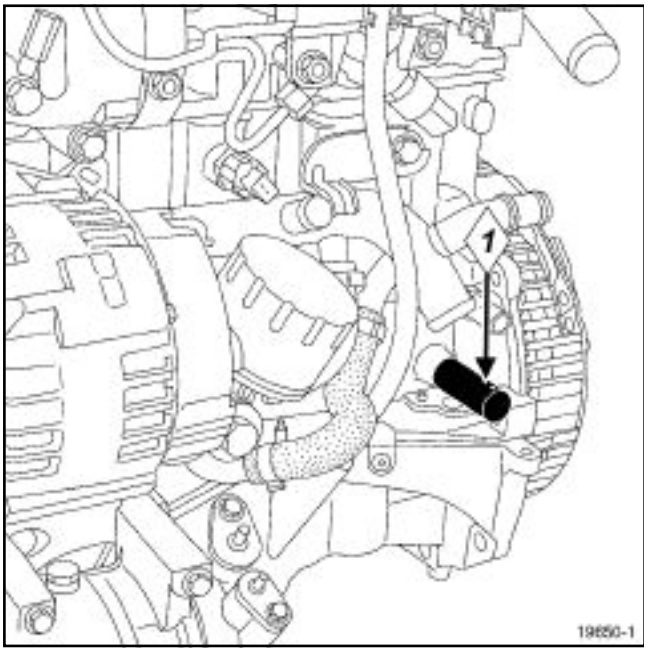

19650-1

Screw in the TDC setting pin (**1**) **(Mot. 1489)** .

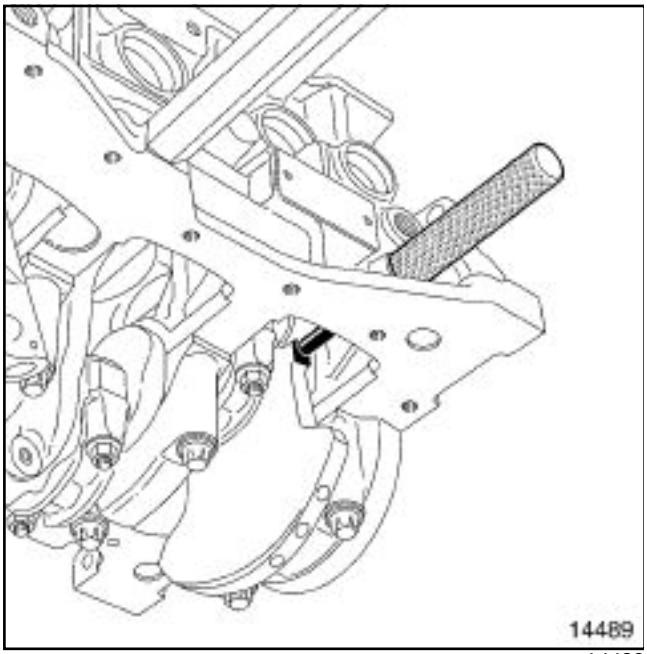

14489

Turn the crankshaft clockwise (timing end) smoothly until the crankshaft comes into contact with the TDC setting pin.

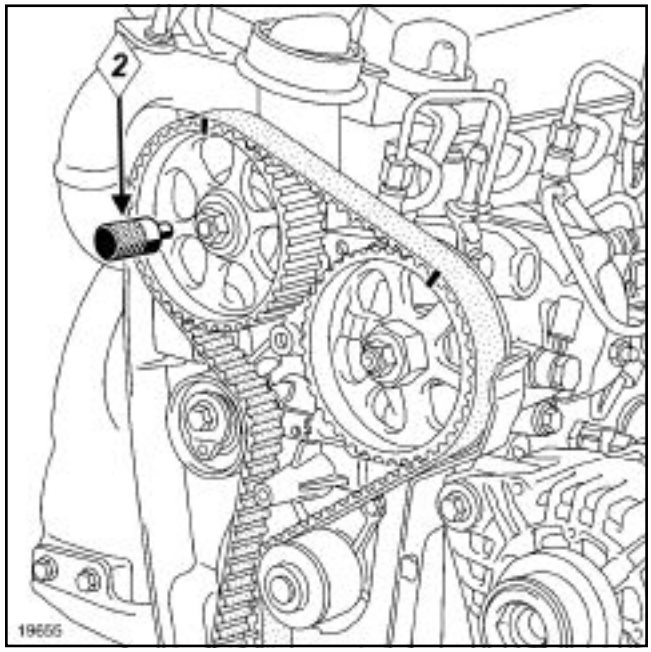

19655

Insert the pin **(Mot. 1430)** (**2**) in the camshaft pulley and cylinder head holes.

Remove:

- the camshaft pulley timing pin **(Mot. 1430)** ,
- the TDC setting pin **(Mot. 1489)**

K9K, and 260 or 270 or 272 or 700 or 702 or 704 or 706 or 710 or 712 or 722 or 724 or 728 or 729 or 750 or 752 or 760 or 762 or 790

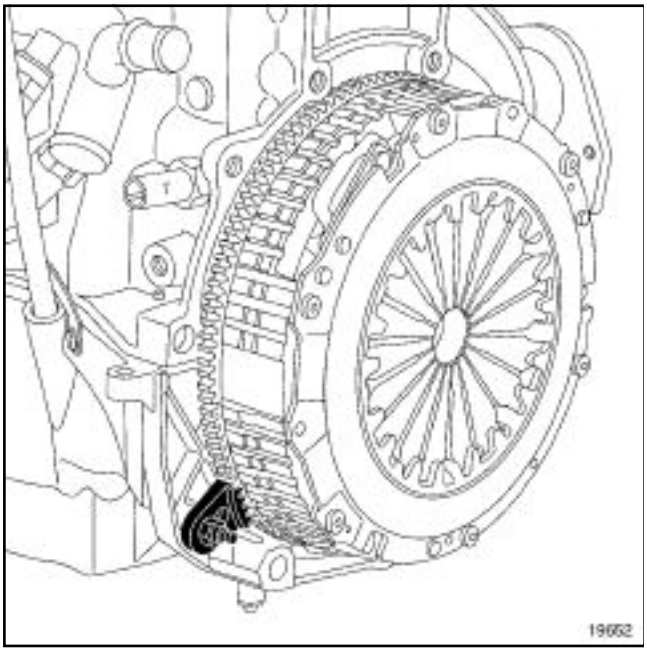

19652

Fit flywheel locking tool **(Mot. 582-01)** or **(Mot. 1677)**
.

Note:

For engines that have already had the flywheel removed, screw two used flywheel bolts into the crankshaft to lock it using a large screwdriver.

K9K, and 260 or 270 or 272 or 700 or 702 or 704 or 706 or 710 or 712 or 722 or 724 or 728 or 729 or 750 or 752 or 760 or 762 or 790

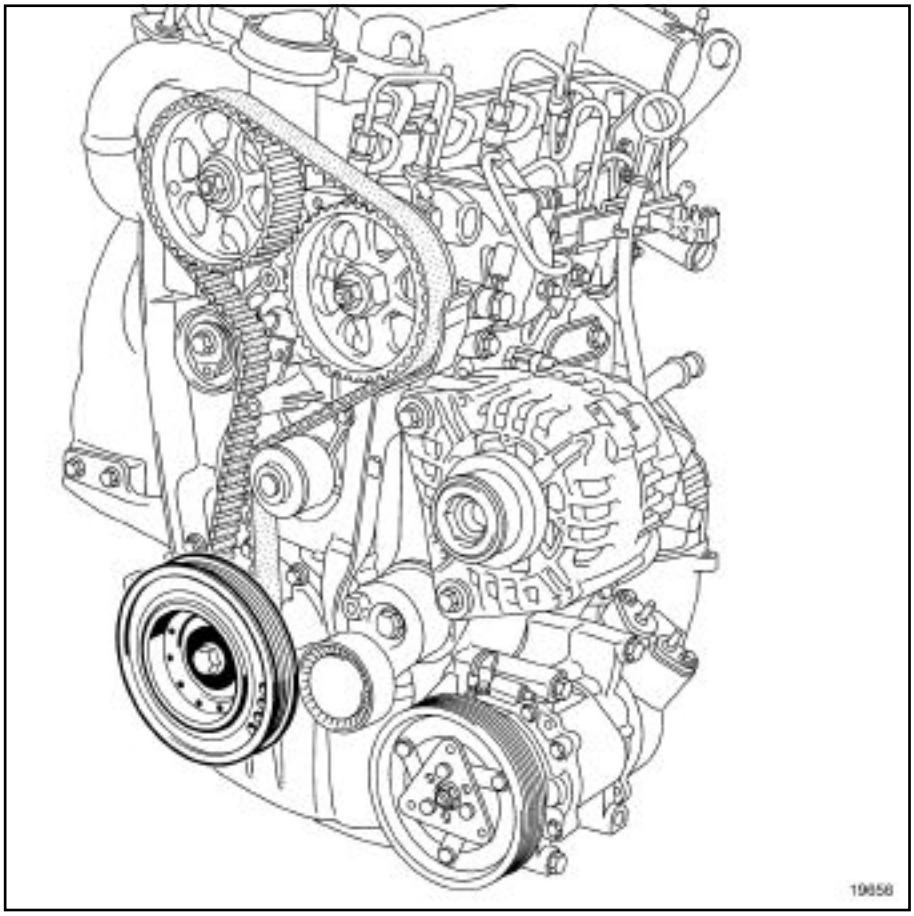

19656

Remove the crankshaft accessories pulley.

K9K, and 260 or 270 or 272 or 700 or 702 or 704 or 706 or 710 or 712 or 722 or 724 or 728 or 729 or 750 or 752 or 760 or 762 or 790

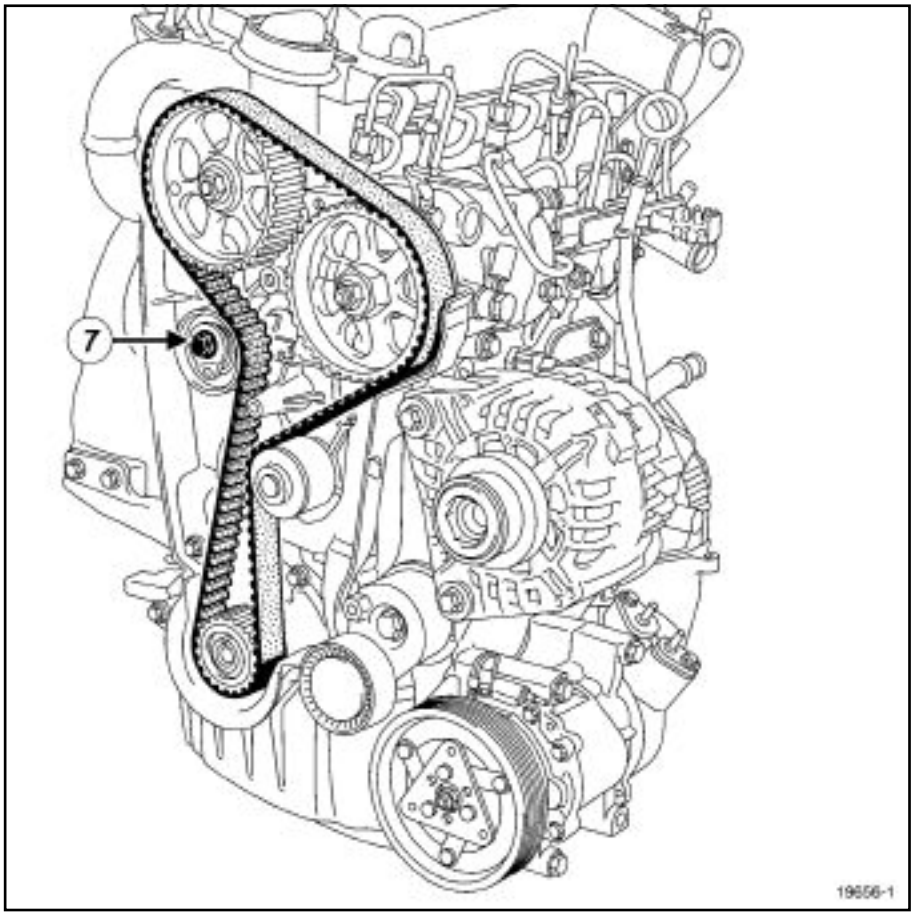

19656-1

Slacken the tensioning roller bolt (**7**) .

Loosen the timing tensioning roller by turning the eccentric cam using a **6mm** Allen key.

Remove:

- the timing belt taking care not to let the crankshaft timing sprocket fall out,
- the timing tensioning roller.

V - CYLINDER HEAD REMOVAL

VI - GUIDELINES FOR REPAIRS TO THE CYLINDER HEAD

IMPORTANT
Wear protective gloves during every operation.

VII - EQUIPMENT REQUIRED FOR THE CYLINDER HEAD

- Male torx socket,
- Female torx socket.

K9K, and 260 or 270 or 272 or 700 or 702 or 704 or 706 or 710 or 712 or 722 or 724 or 728 or 729 or 750 or 752 or 760 or 762 or 790

VIII - REMOVAL

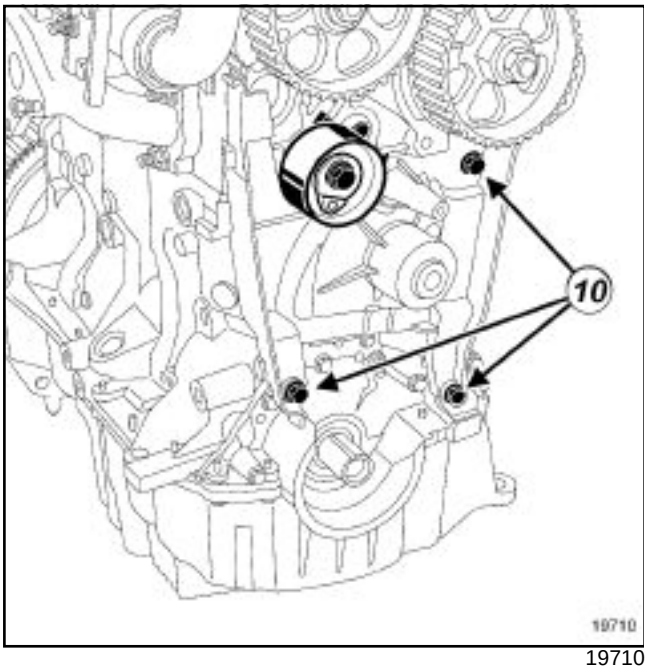

19710

Remove:

- the inner timing cover mounting bolts (**10**) ,
- the inner timing cover (by tilting the alternator if necessary).

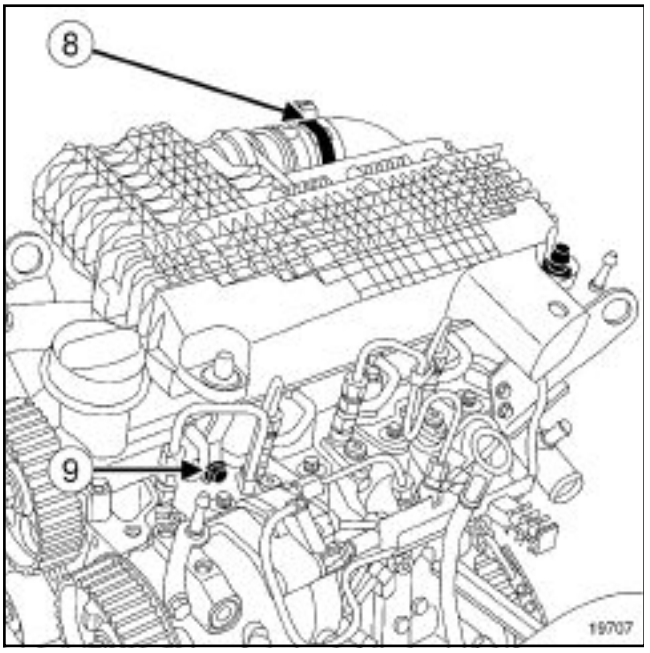

19707

Remove:

- the clip (**8**) ,
- the air filter unit mounting bolt (**9**) ,
- the air filter unit.

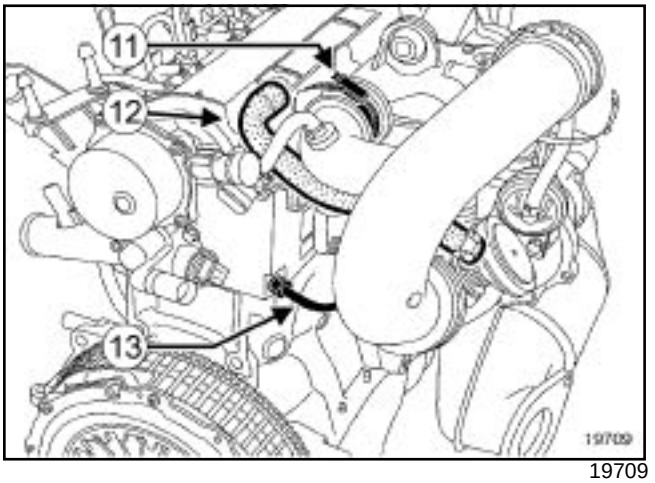

19709

Loosen the clip (**11**) .

Remove the oil vapour rebreathing pipe (**12**) from the rocker cover.

Undo the turbocharger oil supply pipe nut (**13**) .

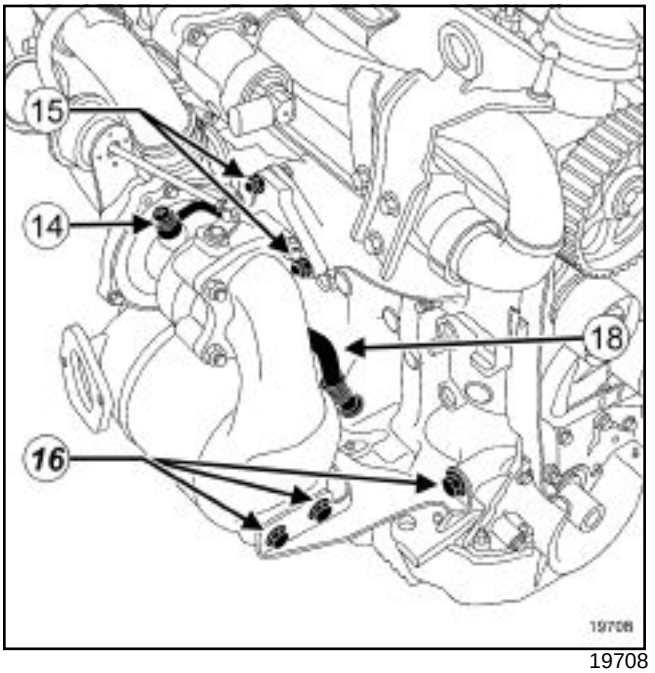

19708

Remove:

- the turbocharger oil supply pipe bolt (**14**) using a male torx socket,
- the turbocharger oil supply pipe.

Remove:

- the turbocharger oil return pipe bolts (**18**) ,
- the catalytic convertor stay bolts (**16**) ,
- the exhaust flange bolts (**15**) on the turbocharger.

K9K, and 260 or 270 or 272 or 700 or 702 or 704 or 706 or 710 or 712 or 722 or 724 or 728 or 729 or 750 or 752 or 760 or 762 or 790

Remove the turbocharger-catalytic converter assembly, taking care **not to damage the turbocharger oil return pipe** ***(18)*** .

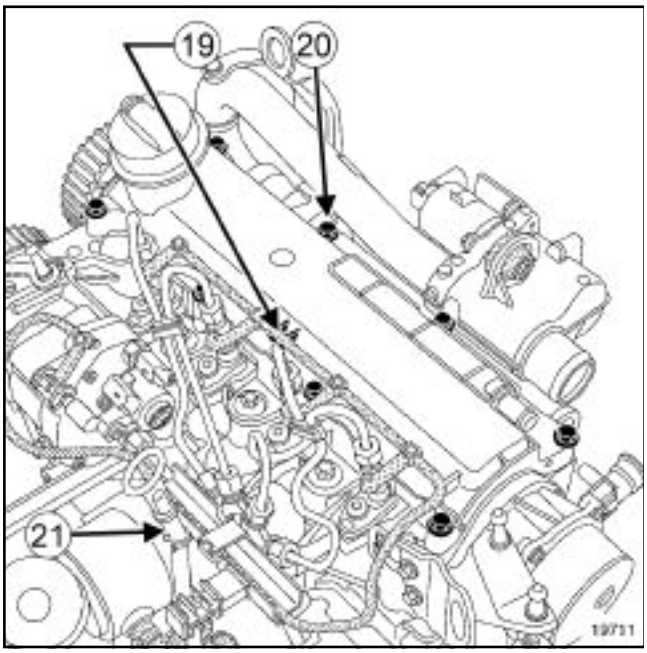

19711

Unclip the fuel return pipe from the rocker cover (**19**) .

Remove:

- the dipstick guide tube (**21**) ,
- the rocker cover mounting bolts (**20**) ,
- the rocker cover.

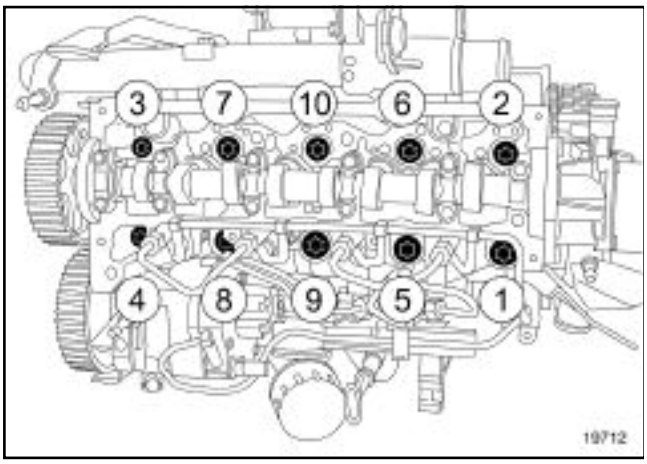

19712

Remove:

- the cylinder head bolts in the order specified using a female torx socket,
- the cylinder head.

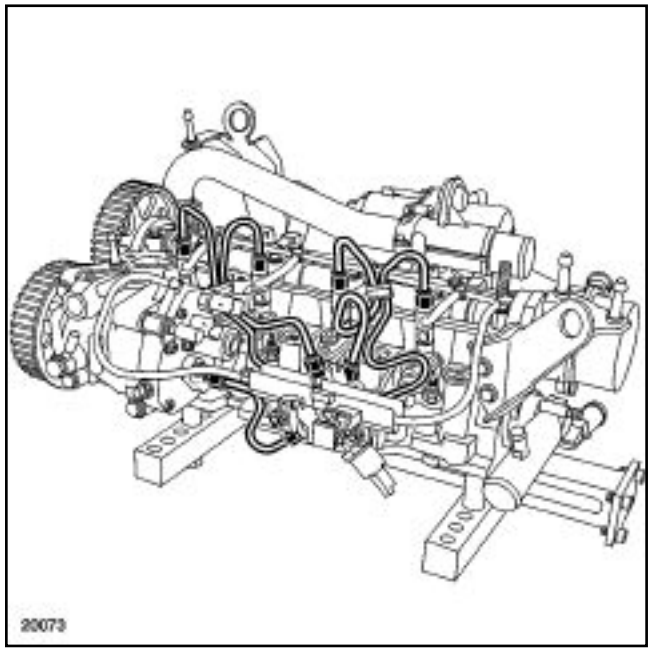

20073

Fit the cylinder head onto the cylinder head support **(Mot. 1573)** .

Remove the cylinder head gasket from the cylinder block.

Timing - cylinder head: Removal

K9K, and 274 or 276 or 714 or 716 or 718 or 766 or 768

Special tooling required	
Mot. 1489	TDC locating pin.
Mot. 1430	Set of 5 crankshaft and camshaft pulley timing pins.
Mot. 582-01	Flywheel locking tool.
Mot. 1677	Flywheel locking tool.
Mot. 1573	Cylinder head support

I - TIMING GEAR REMOVAL

II - GUIDELINES FOR REPAIRS TO THE TIMING GEAR

IMPORTANT
Wear protective gloves during every operation.

III - EQUIPMENT REQUIRED FOR THE TIMING GEAR

- Protective gloves,
- Large screwdriver,
- Allen key (**6mm**),
- Number **14** torx socket.

IV - REMOVAL

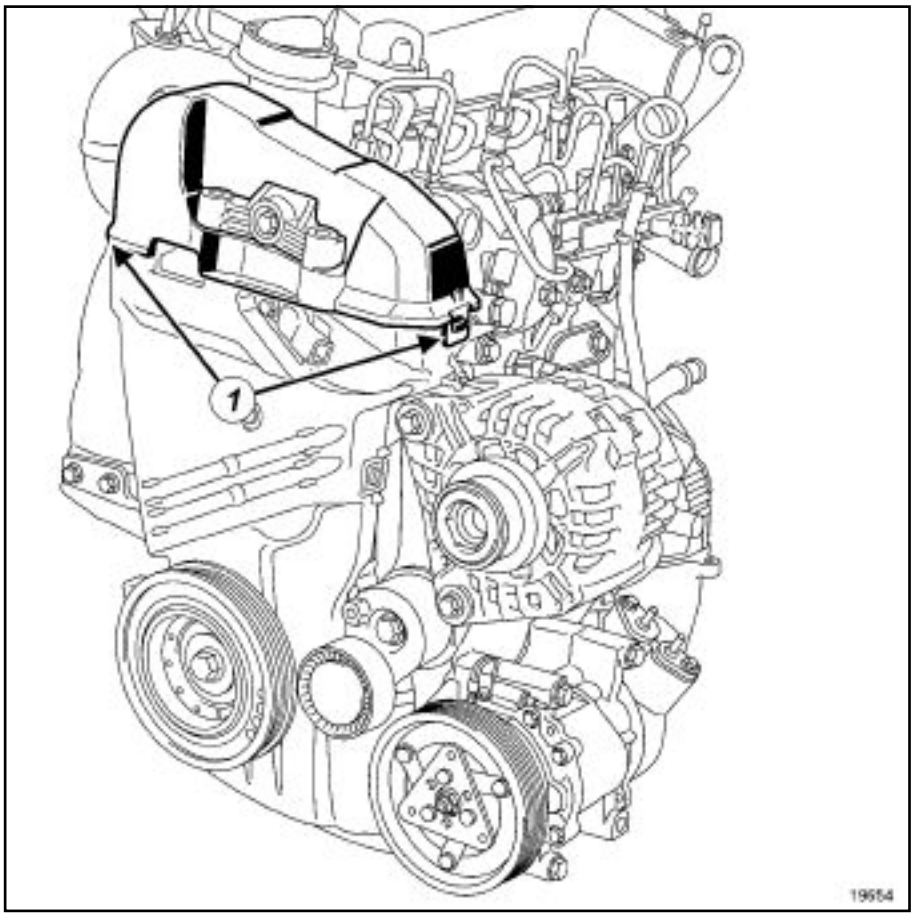

19654

Remove the upper timing cover by unclipping both tabs (**1**) .

K9K, and 274 or 276 or 714 or 716 or 718 or 766 or 768

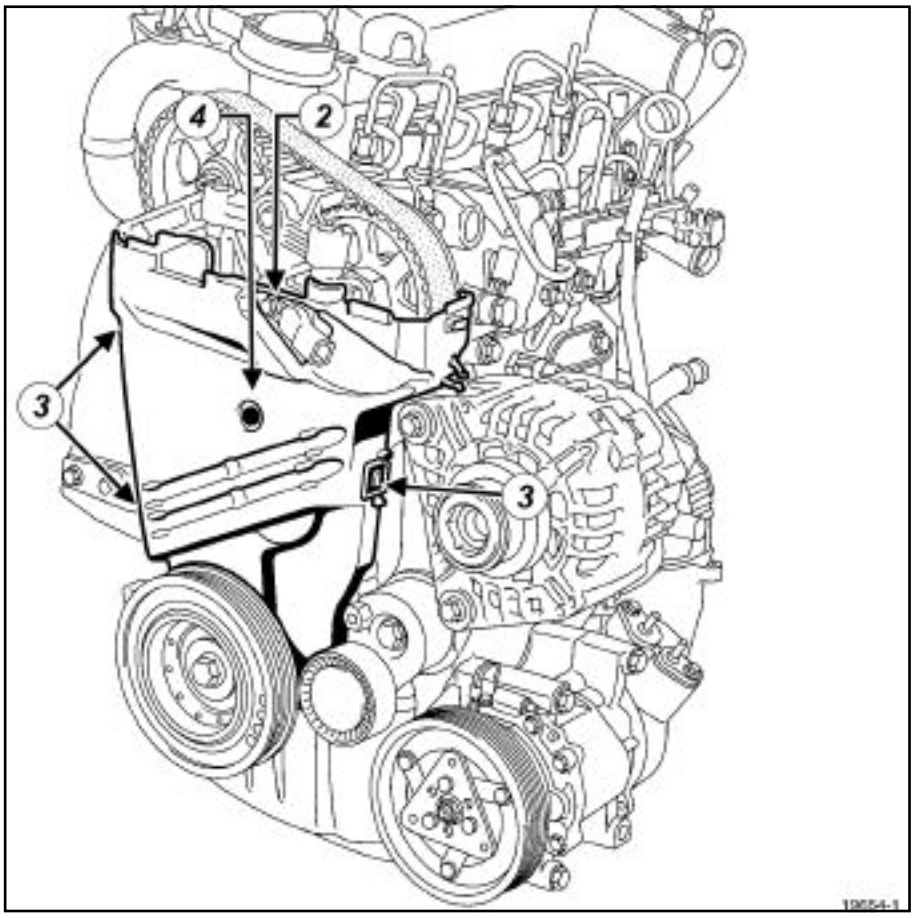

19654-1

Remove:

- the high pressure pump position sensor (**2**) ,
- the plastic bolt (**4**) .

Unclip the three tabs (**3**) .

Remove the lower timing cover.

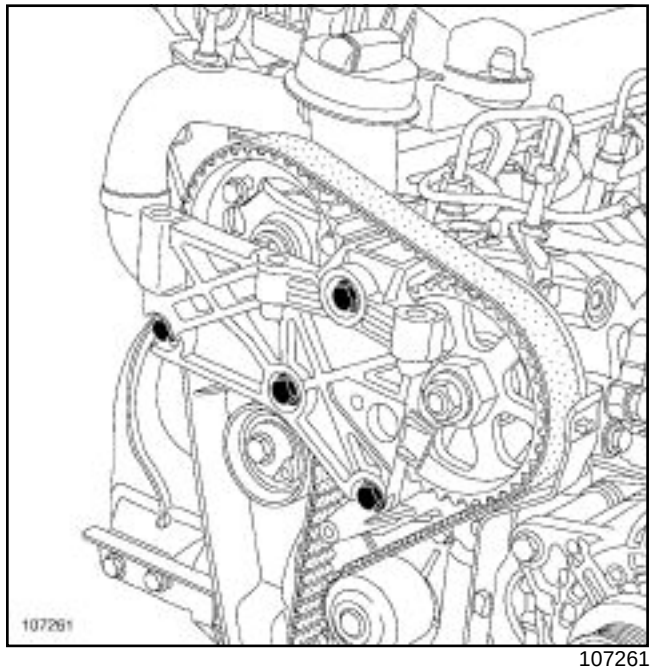

107261

Remove the cylinder head suspended mounting.

K9K, and 274 or 276 or 714 or 716 or 718 or 766 or 768

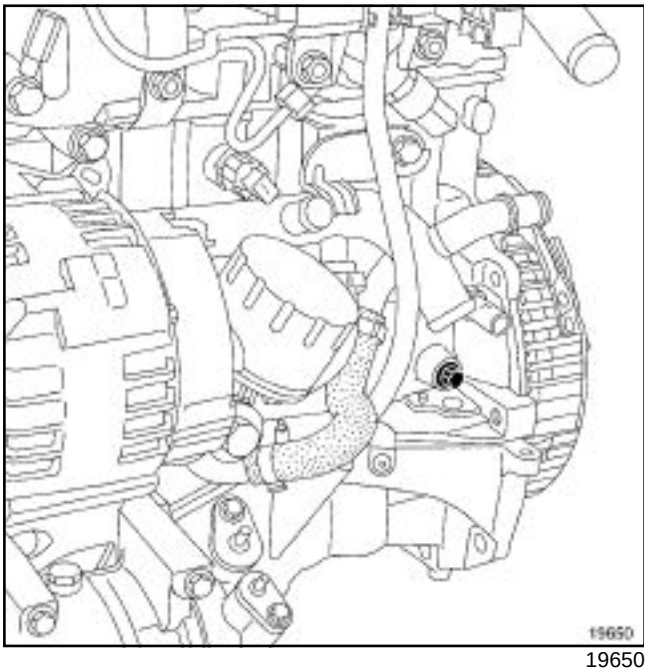

19650

Remove the TDC setting pin plug using a female torx socket (**14**).

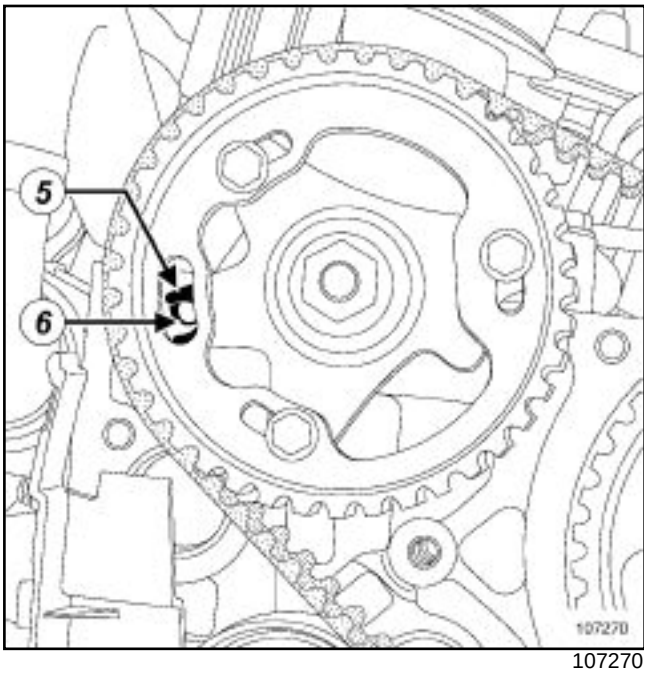

107270

Turn the crankshaft to position the hole (**5**) of the camshaft pulley almost opposite the hole (**6**) in the cylinder head.

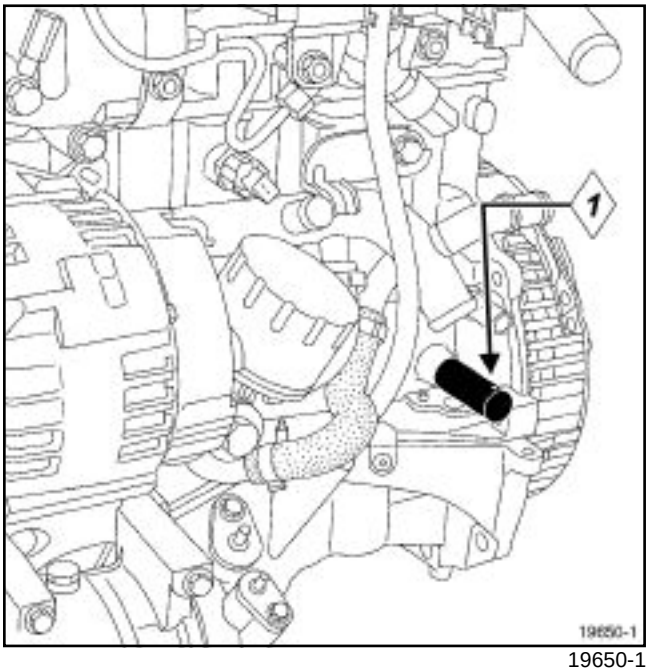

19650-1

Screw in the TDC setting pin (**1**) **(Mot. 1489)** .

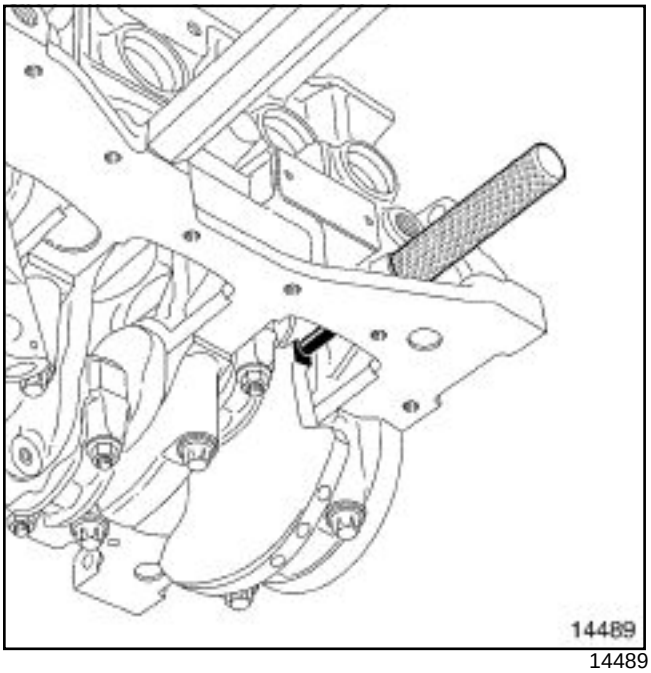

14489

Turn the crankshaft clockwise (timing end) smoothly until the crankshaft comes into contact with the TDC setting pin.

K9K, and 274 or 276 or 714 or 716 or 718 or 766 or 768

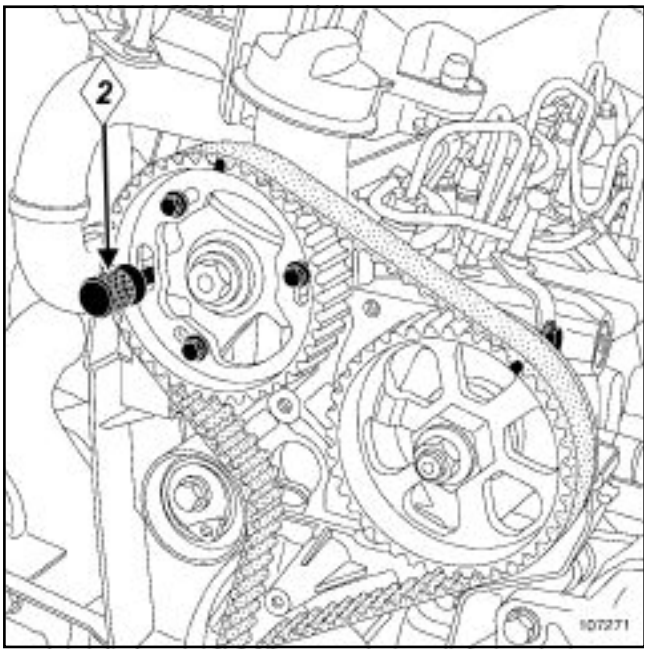

107271

Insert the pin **(Mot. 1430)** (**2**) in the camshaft pulley and cylinder head holes.

Remove:

- the camshaft pulley timing pin **(Mot. 1430)** ,
- the TDC setting pin **(Mot. 1489)** .

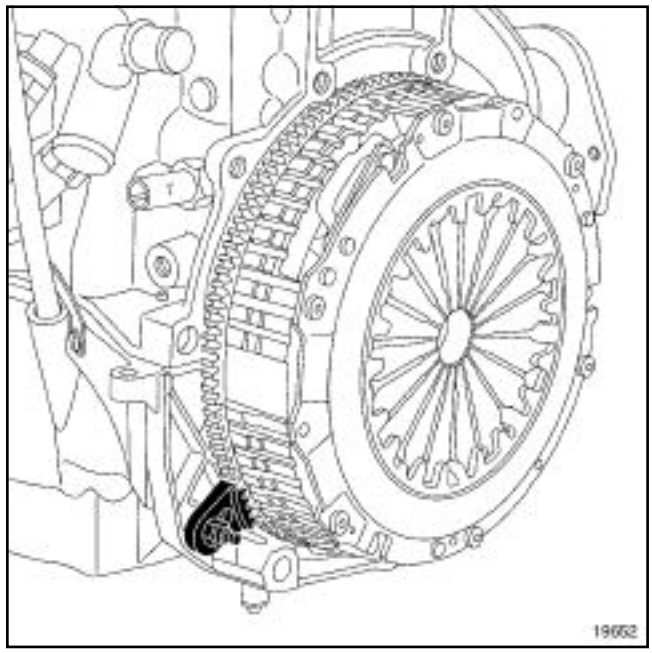

19652

Fit the flywheel locking tool **(Mot. 582-01)** or **(Mot. 1677)** .

Note:

For engines that have already had the flywheel removed, screw two used flywheel bolts into the crankshaft to lock it using a large screwdriver.

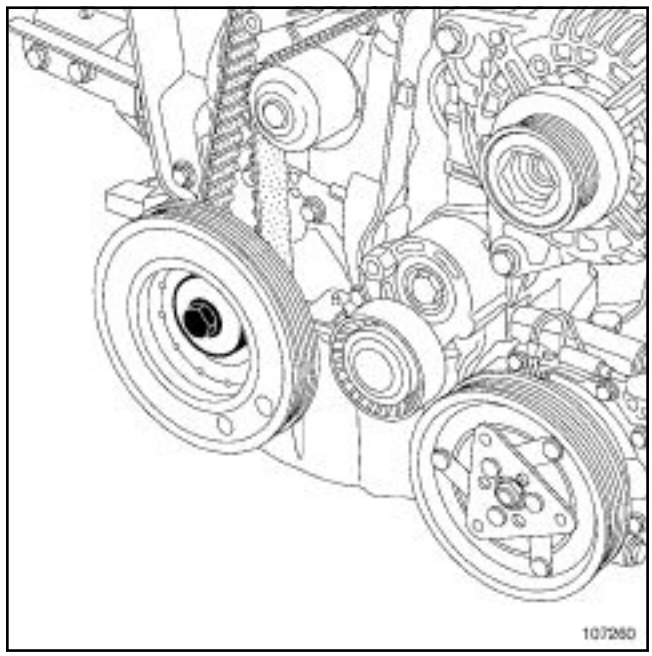

107260

Remove the crankshaft accessories pulley.

K9K, and 274 or 276 or 714 or 716 or 718 or 766 or 768

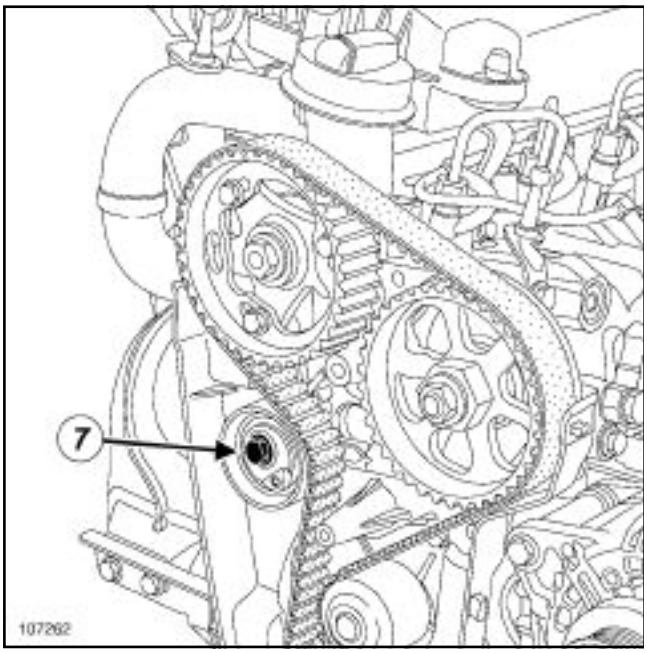

107262

Slacken the tensioning roller bolt (**7**) .

Loosen the timing tensioning roller by turning the eccentric cam using a **6mm** Allen key.

Remove:

- the timing belt,
- the timing tensioning roller.

V - CYLINDER HEAD REMOVAL

VI - GUIDELINES FOR REPAIRS TO THE CYLINDER HEAD

> **IMPORTANT**
> Wear protective gloves during every operation.

VII - EQUIPMENT REQUIRED FOR THE CYLINDER HEAD

- Female torx socket.

VIII - REMOVAL

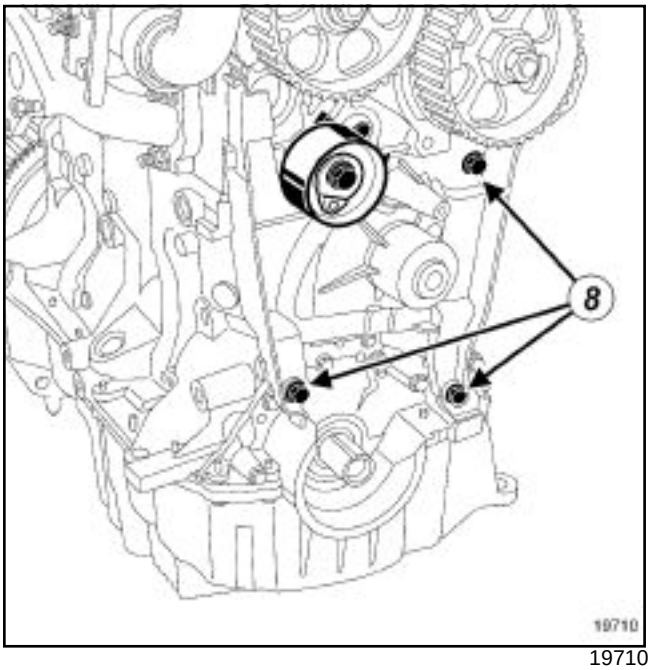

19710

Remove:

- the inner timing cover mounting bolts (**8**) ,
- the inner timing cover (by tilting the alternator if necessary).

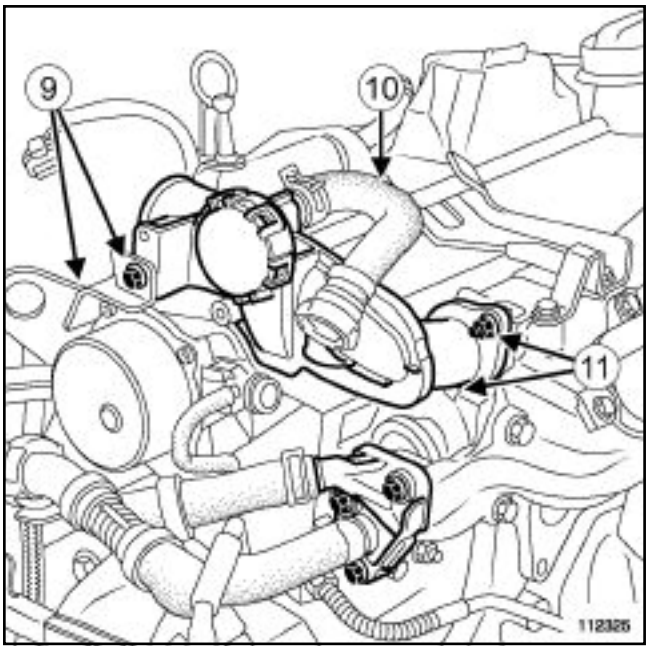

112325

Disconnect the oil vapour recirculation pipe (**10**) .

Remove:

- the oil vapour recirculation valve bolts (**11**) ,
- the oil vapour recirculation valve mounting bracket bolts (**9**) ,

K9K, and 274 or 276 or 714 or 716 or 718 or 766 or 768

- the oil vapour recirculation valve.

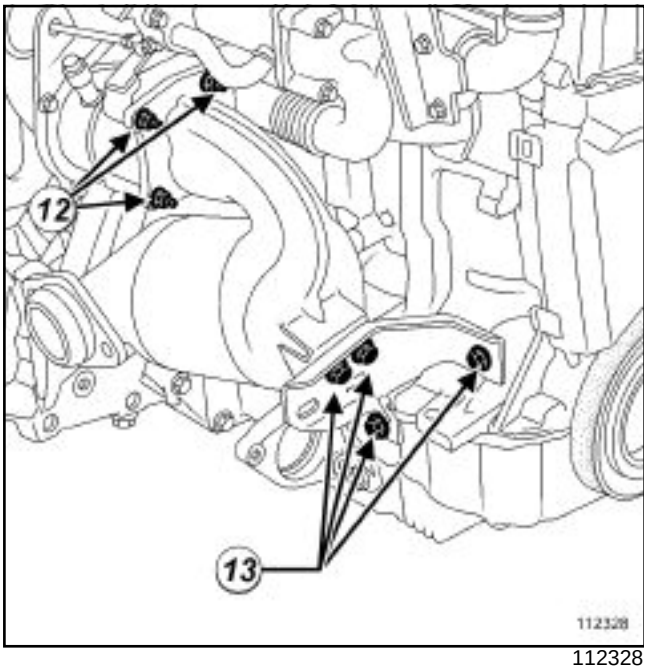

112328

Remove:

- the catalytic convertor stay bolts (**13**) ,
- the catalytic convertor nuts (**12**) on the turbocharger,
- the catalytic converter.

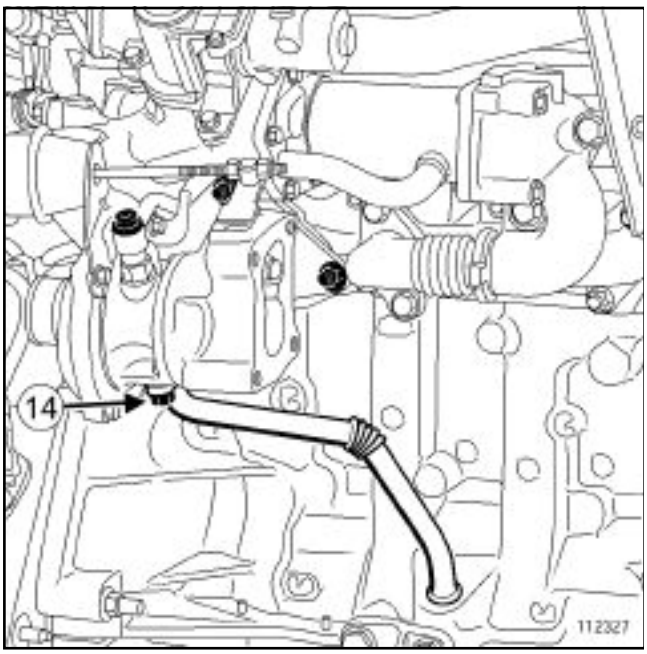

112327

Remove:

- the turbocharger oil return pipe mounting bolts (**14**) ,
- the turbocharger oil return pipe.

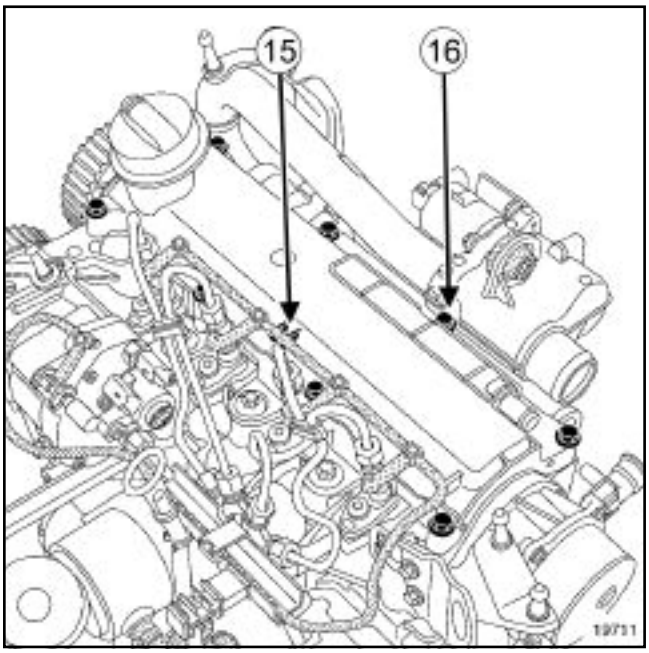

19711

Unclip the fuel return pipe from the rocker cover (**15**) .

Remove:

- the dipstick guide,
- the rocker cover mounting bolts (**16**) ,
- the rocker cover.

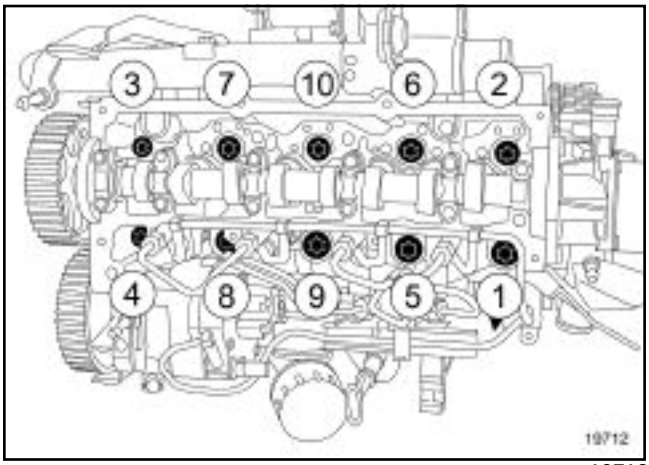

19712

Remove:

- the cylinder head bolts in the order specified using a female torx socket,
- the cylinder head.

K9K, and 274 or 276 or 714 or 716 or 718 or 766 or 768

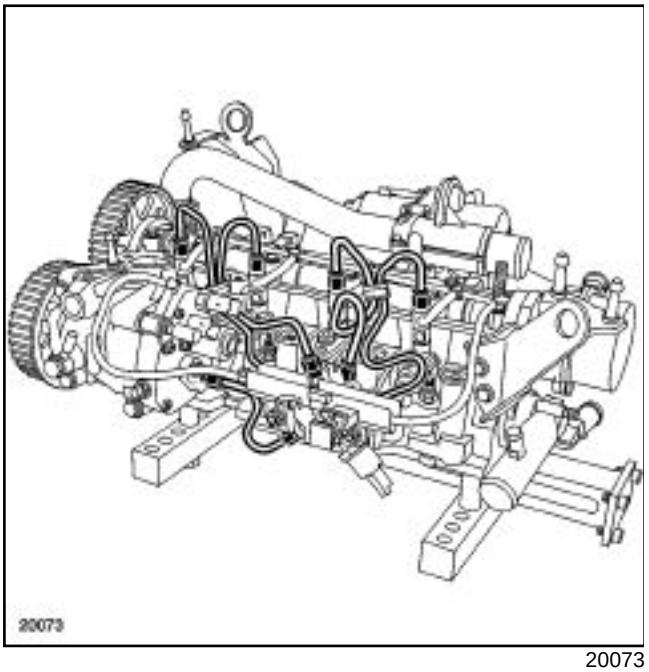

20073

Fit the cylinder head onto the cylinder head support **(Mot. 1573)** .

Remove the cylinder head gasket from the cylinder block.

K9K, and 732 or 764

Special tooling required	
Mot. 1489	TDC locating pin.
Mot. 1430	Set of 5 crankshaft and camshaft pulley timing pins.
Mot. 1677	Flywheel locking tool.
Mot. 1573	Cylinder head support

I - TIMING GEAR REMOVAL

II - GUIDELINES FOR REPAIRS TO THE TIMING GEAR

IMPORTANT
Wear protective gloves during every operation.

III - EQUIPMENT REQUIRED FOR THE TIMING GEAR

- Protective gloves,
- Large screwdriver,
- Allen key **(6mm),**
- Torx socket (**14**).

IV - REMOVAL

K9K, and 732

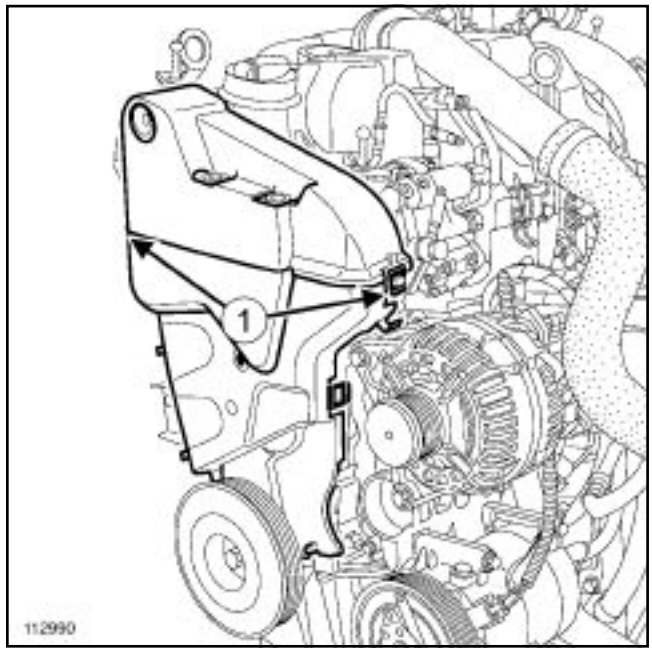

112990

Remove the upper timing cover by unclipping both tabs (**1**) .

K9K, and 732 or 764

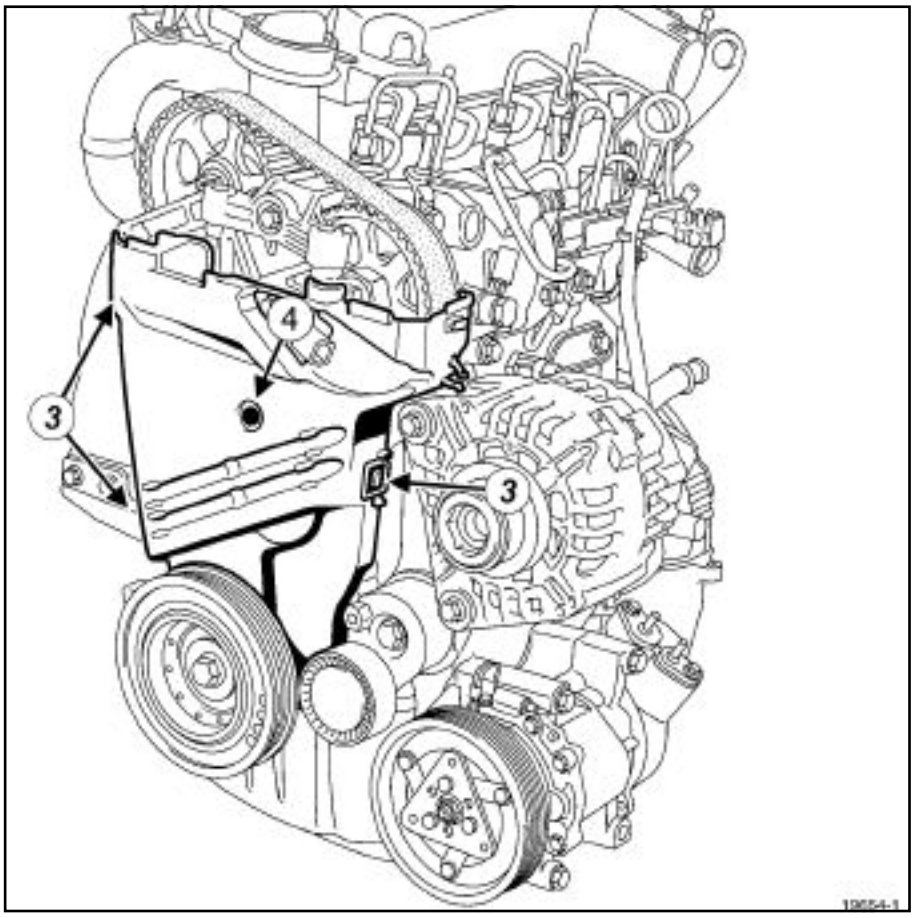

19654-1

Remove the plastic bolt (**4**) .

Unclip the three tabs (**3**) .

Remove the lower timing cover.

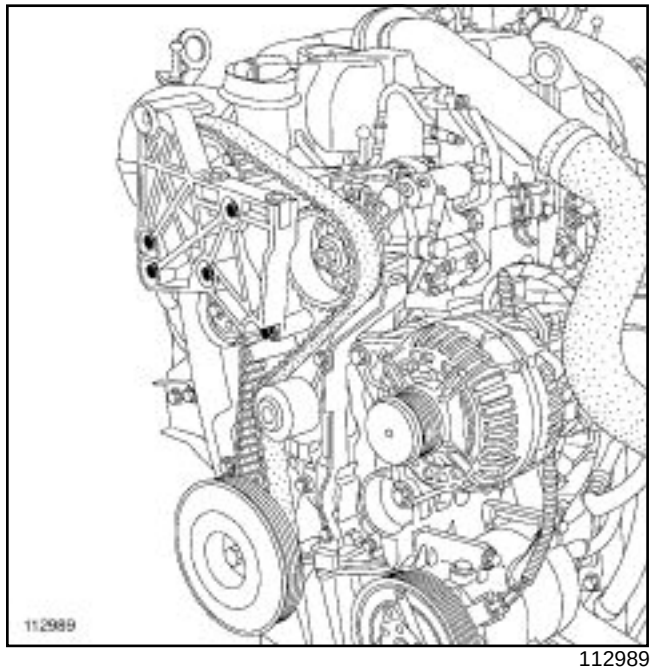

112989

Remove the cylinder head suspended mounting.

K9K, and 732 or 764

K9K, and 764

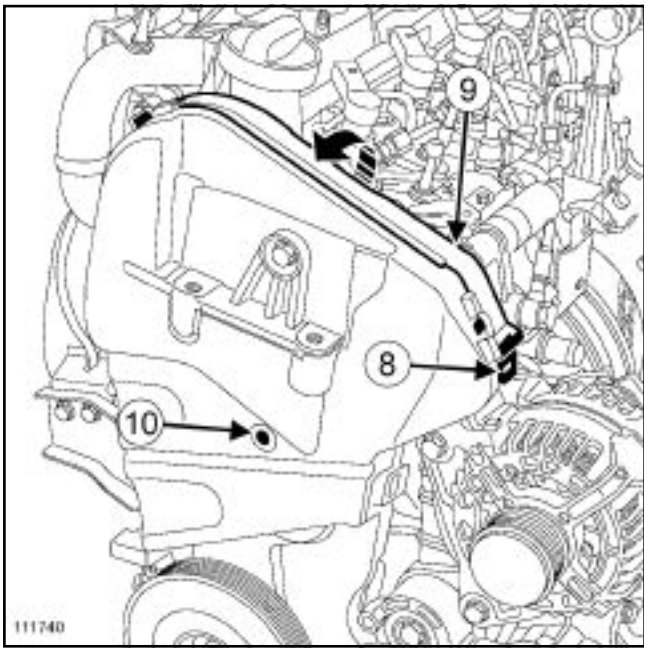

111740

Unclip the tab (**8**) .

Rotate the timing cover (**9**) in the direction of the arrow.

Remove the plastic bolt (**10**) .

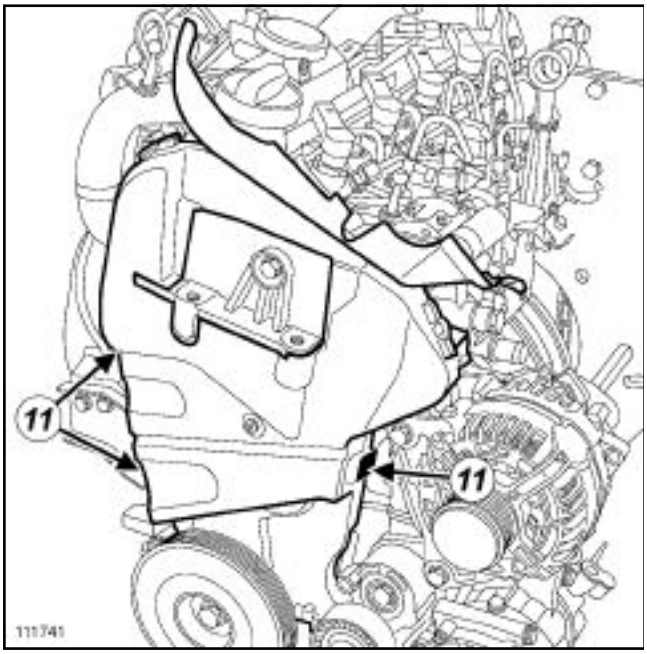

111741

Unclip the three tabs (**11**) .

Remove the timing cover.

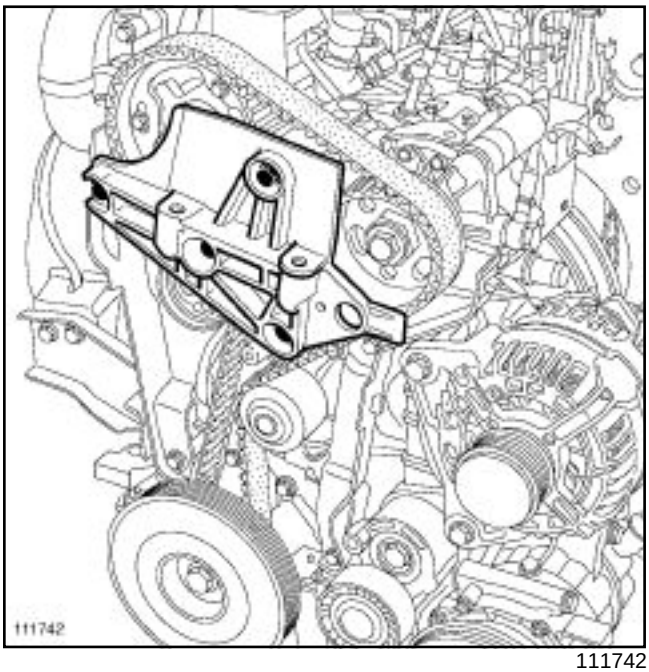

111742

Remove the cylinder head suspended mounting.

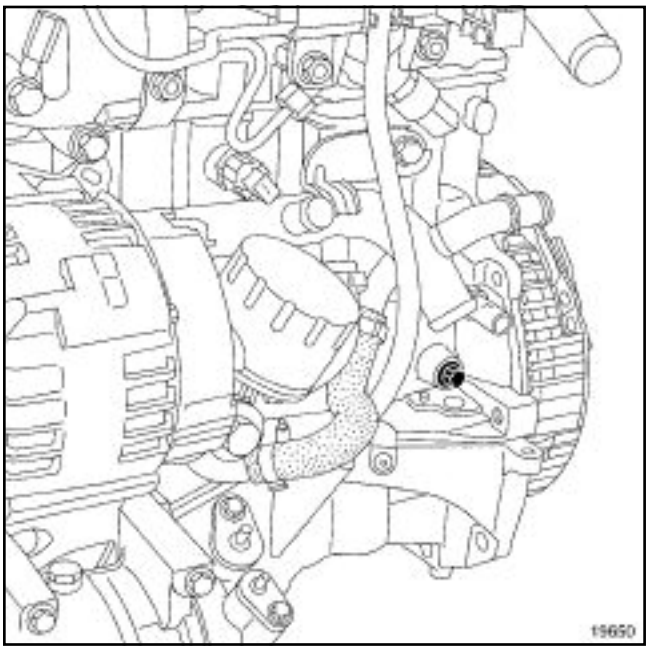

19650

Remove the TDC setting pin plug using a female torx socket (**14**).

K9K, and 732 or 764

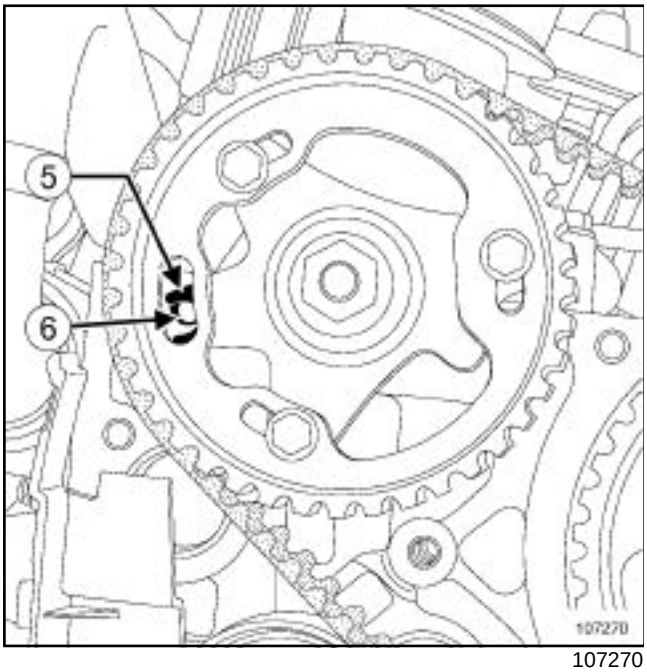

107270

Turn the crankshaft to position the hole (**5**) of the camshaft pulley almost opposite the hole (**6**) in the cylinder head.

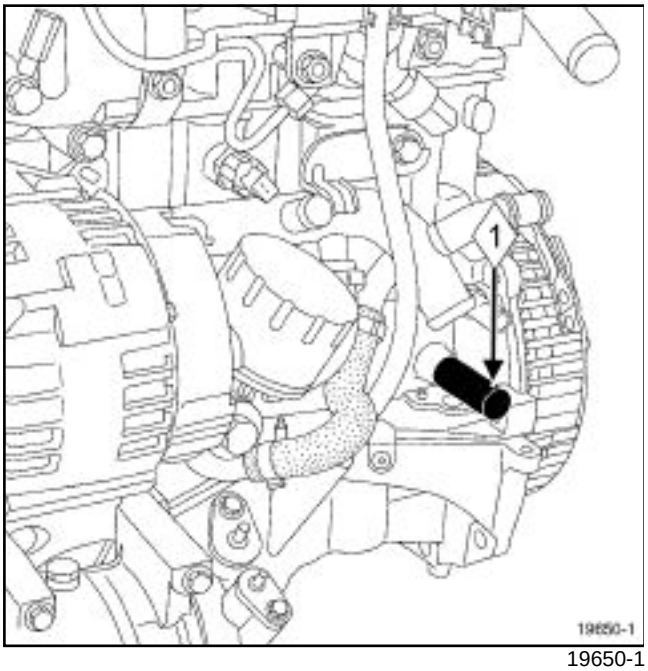

19650-1

Screw in the TDC setting pin (**1**) **(Mot. 1489)** .

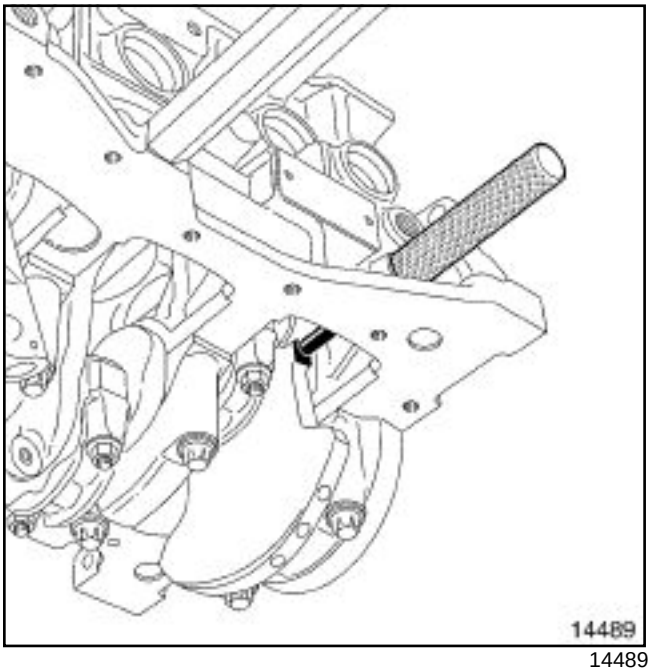

14489

Turn the crankshaft clockwise (timing end) smoothly until the crankshaft comes into contact with the TDC setting pin.

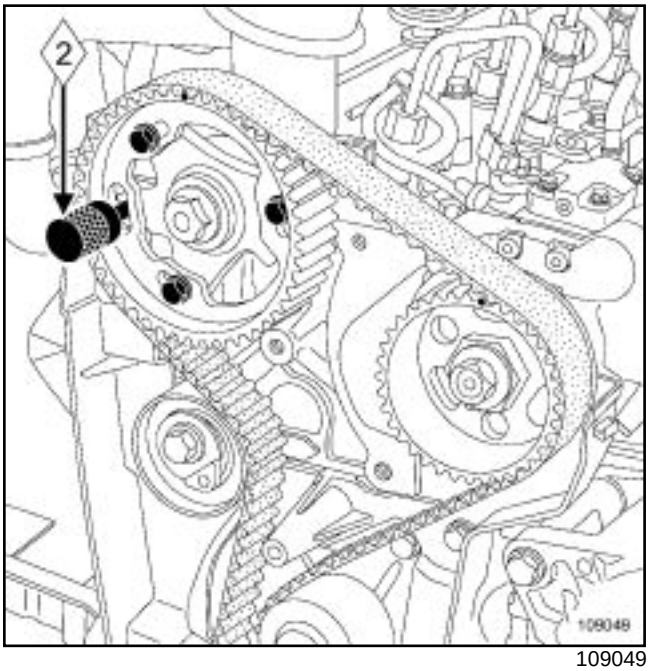

109049

Insert the pin **(Mot. 1430)** (**2**) in the camshaft pulley and cylinder head holes.

Remove:

- the camshaft pulley timing pin **(Mot. 1430)** ,
- the TDC setting pin **(Mot. 1489)** .

K9K, and 732 or 764

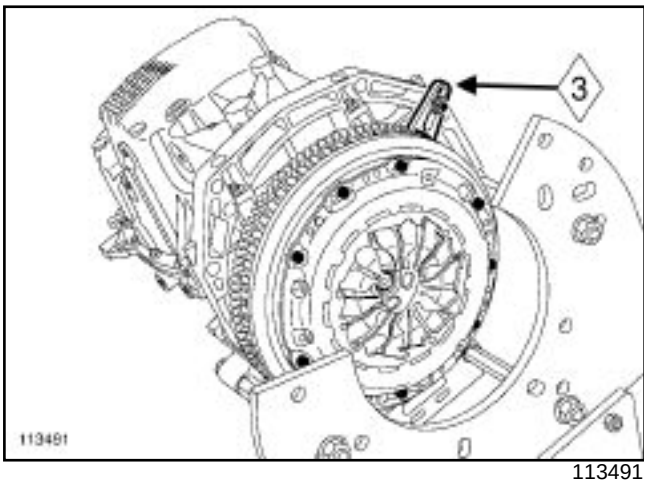

113491

Fit the flywheel locking tool (**3**) **(Mot. 1677)** .

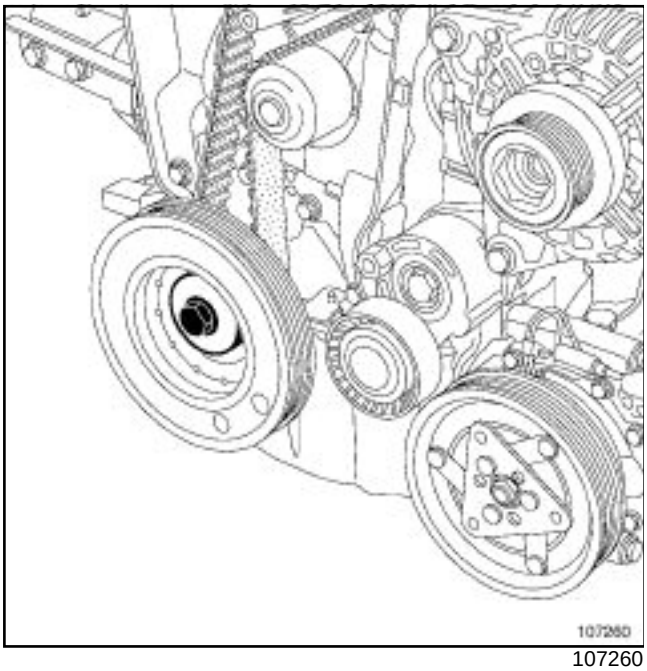

107260

Remove the crankshaft accessories pulley.

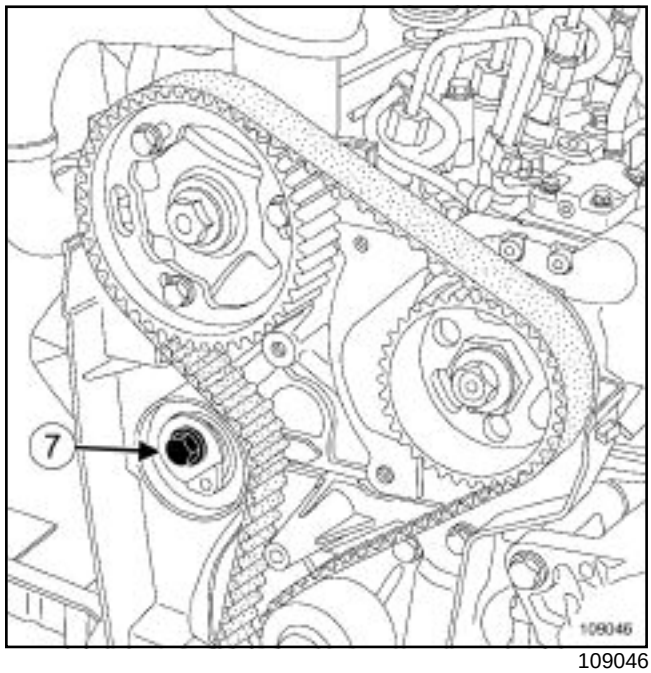

109046

Slacken the tensioning roller bolt (**7**) .

Slacken the timing tension wheel by turning the eccentric cam using a **6mm** allen key

Remove:

- the timing belt,

- the timing tensioning roller.

V - CYLINDER HEAD REMOVAL

VI - GUIDELINES FOR REPAIRS TO THE CYLINDER HEAD

IMPORTANT
Wear protective gloves during every operation.

VII - EQUIPMENT REQUIRED FOR THE CYLINDER HEAD

- Female torx socket.

K9K, and 732 or 764

VIII - REMOVAL

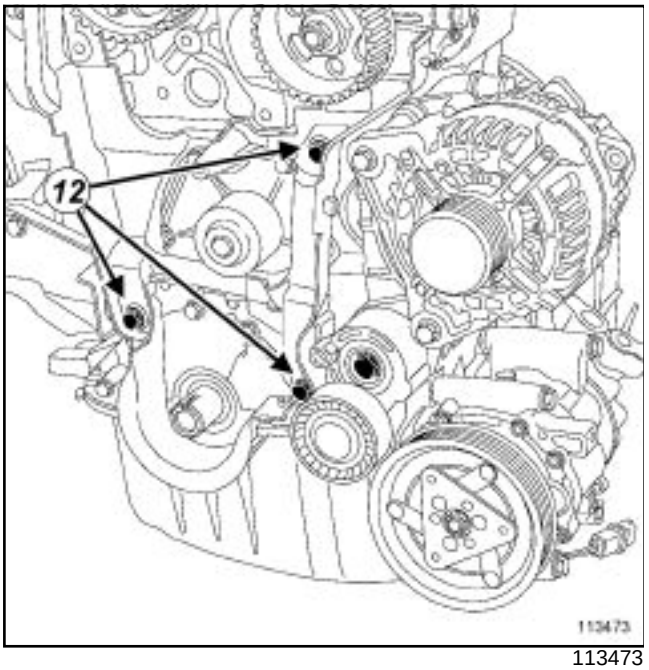

113473

Remove:

- the inner timing cover mounting bolts (**12**) ,
- the inner timing cover (by tilting the alternator if necessary).

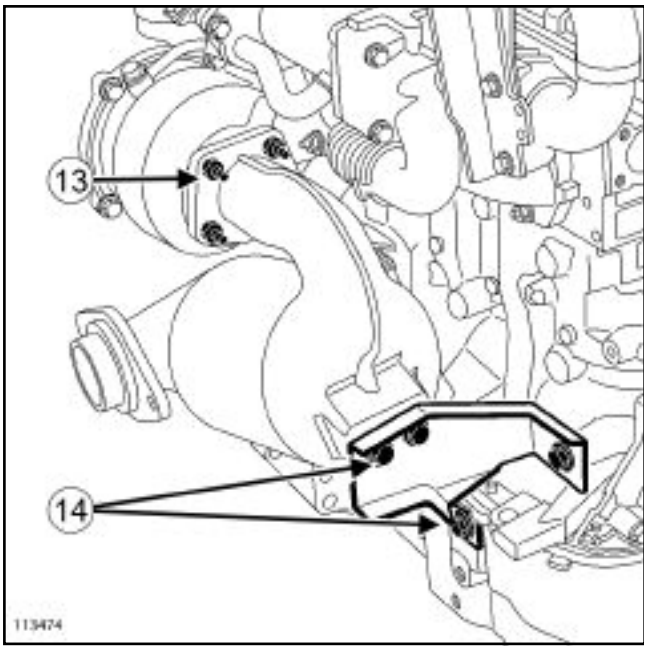

113474

Remove:

- the catalytic convertor mounting bolts (**14**) ,
- the catalytic convertor nuts (**13**) on the turbocharger,
- the catalytic converter.

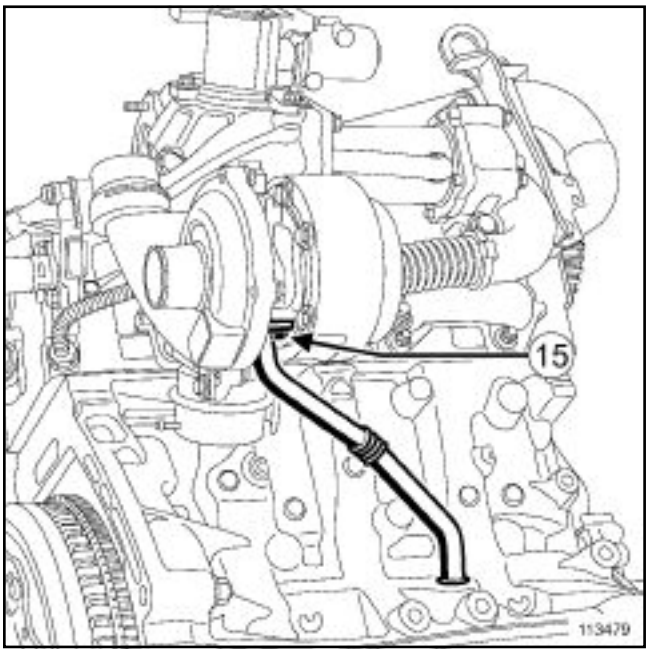

113479

Remove:

- the turbocharger oil return pipe mounting bolts (**15**) ,
- the turbocharger oil return pipe.

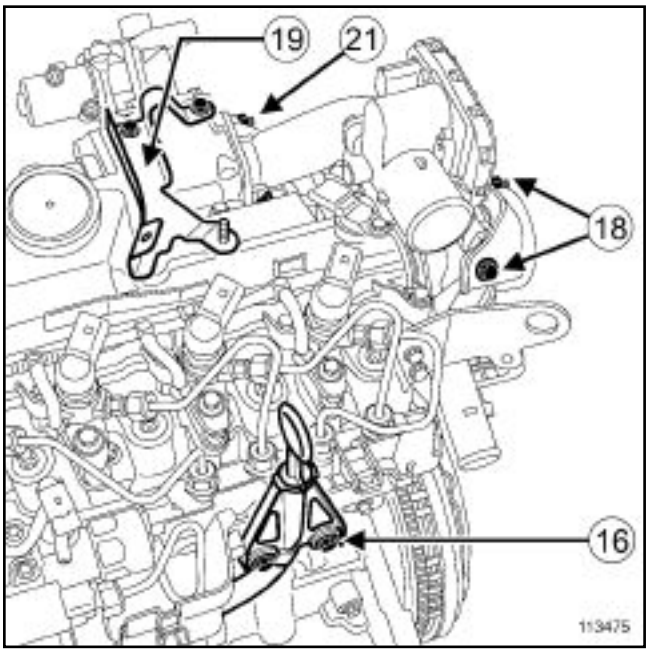

113475

Remove:

- the dipstick guide mounting nuts (**16**) ,
- the dipstick guide,
- the damper valve mounting bracket bolts (**18**) ,
- the damper valve mounting bolts (**21**) ,
- the damper valve,

K9K, and 732 or 764

- the EGR valve retaining bracket (**19**) .

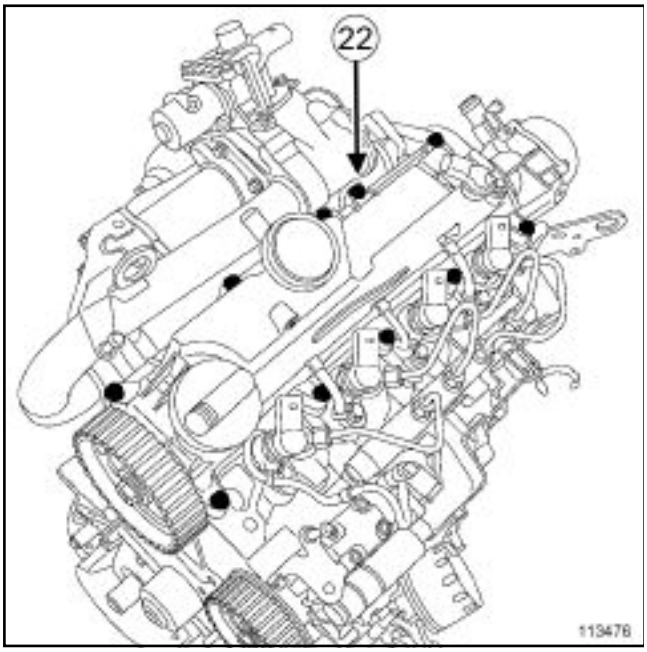

113476

Remove:

- the rocker cover mounting bolts (**22**) ,
- the rocker cover.

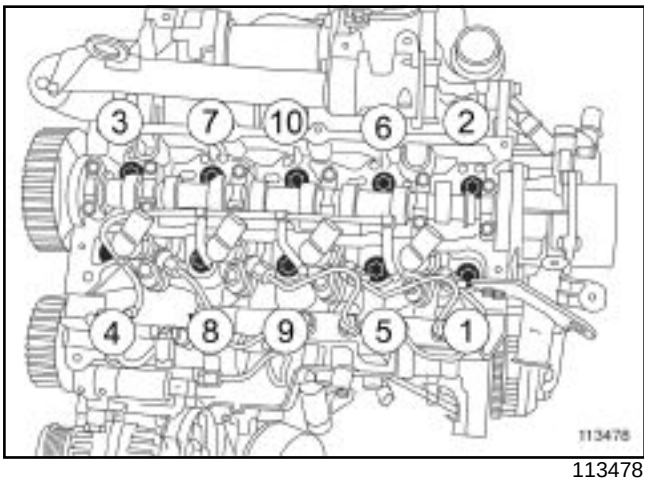

113478

Remove:

- the cylinder head bolts in the order specified using a female torx socket,
- the cylinder head.

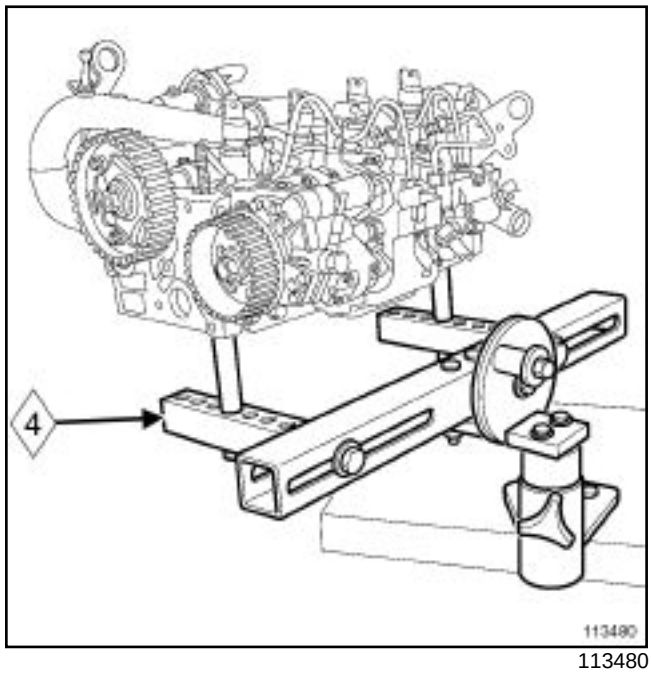

113480

Fit the cylinder head onto the cylinder head support (**4**) **(Mot. 1573)** .

Remove the cylinder head gasket from the cylinder block.

Cylinder head: Dismantling

K9K, and 260 or 270 or 272 or 700 or 702 or 704 or 706 or 710 or 712 or 722 or 724 or 728 or 729 or 750 or 752 or 760 or 762 or 790

Special tooling required	
Mot. 1566	Spanner for removing high pressure pipes.
Mot. 1746	Offset spanner for tightening high pressure pump pipes.
Mot. 1567	Long nose pliers for EGR duct clips.
Mot. 799-01	Timing gear wheel immobiliser.
Mot. 1502	Valve lifting tool for removing valves.

I - RECOMMENDATIONS FOR REPAIR

IMPORTANT

- It is essential to follow the cleanliness guidelines (see **10A**, **Engine and lower engine assembly**, **Engine: Precautions for repair**, page **10A-4**) ,
- Wear latex safety gloves when using the cleaning agent,
- Wear safety goggles fitted with side shields.

WARNING

Do not blast with compressed air once the fuel circuit is open, otherwise impurities may enter the system. Use cleaning cloths only, if necessary.

II - PARTS AND CONSUMABLES FOR THE REPAIRS

Consumables

- Set of blanking plugs, part number **77 01 206 804** ,
- Cleaning cloths, part number **77 11 211 707** ,
- Brake cleaner, part number **77 11 226 128** ,
- Injector cleaner, part number **77 11 224 188** .

III - EQUIPMENT REQUIRED

- Protective goggles (with side shields),
- Latex protective gloves,
- Indelible marker,
- Plastic bags,
- Valve spring compressor,
- Tweezers,
- Spanner for the high pressure pipes,
- Crow foot spanner,
- Wrench with hinge for heater plugs,
- Male torx sockets.

IV - STRIPPING DOWN THE CYLINDER HEAD

Clean the high pressure pipe unions (see **10A**, **Engine and lower engine assembly**, **Engine: Precautions for repair**, page **10A-4**) .

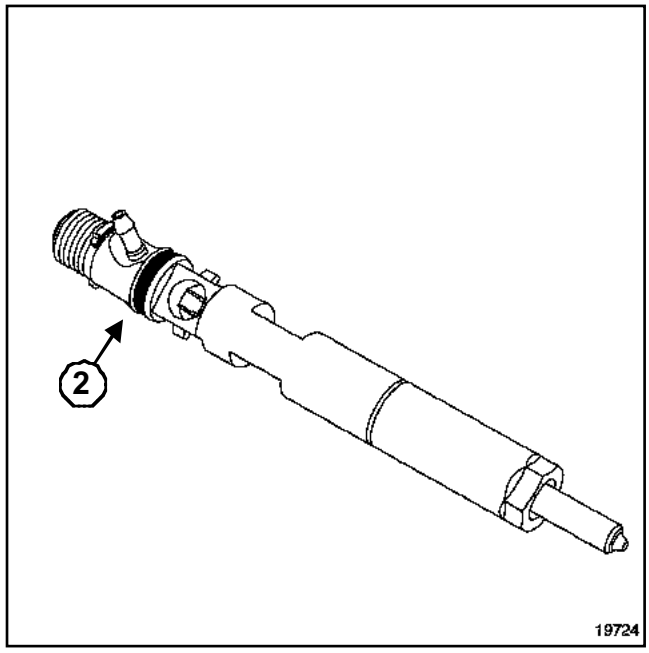

19724

Note:

It is essential that the injector intermediate union (**2**) is secured when loosening the high pressure pipes.

K9K, and 260 or 270 or 272 or 700 or 702 or 704 or 706 or 710 or 712 or 722 or 724 or 728 or 729 or 750 or 752 or 760 or 762 or 790

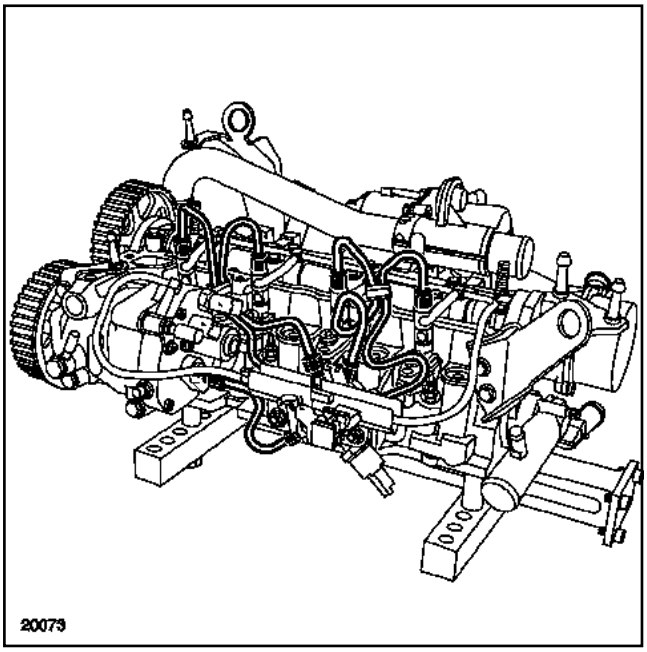

20073

Remove the high pressure pipes using the **(Mot. 1566)** and **(Mot. 1746)** or using a pipe wrench.

Fit blanking plugs:

- to the high pressure pump,
- to the rail,
- to the injectors.

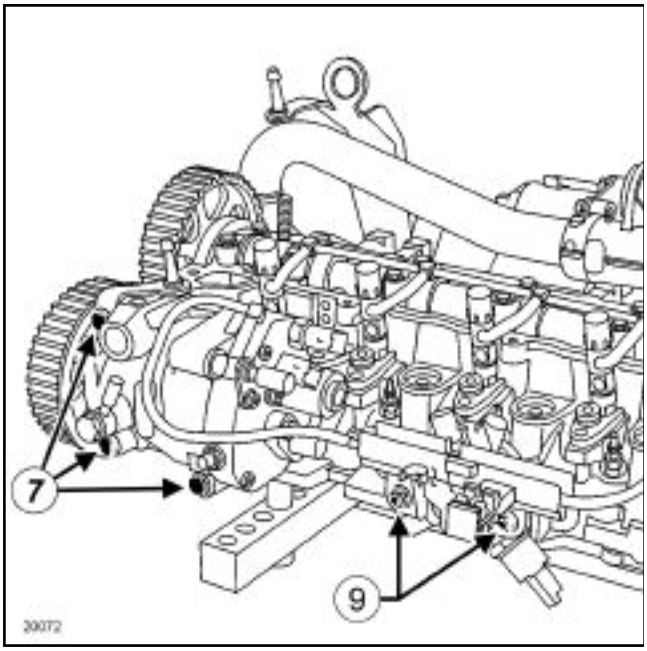

20072

Remove:

- the high pressure pump mounting bolts (**7**) ,
- the high-pressure pump,
- the high pressure rail mounting nuts (**9**) ,
- the rail.

Note:

It is essential to match the injectors to their respective cylinders using an indelible marker.

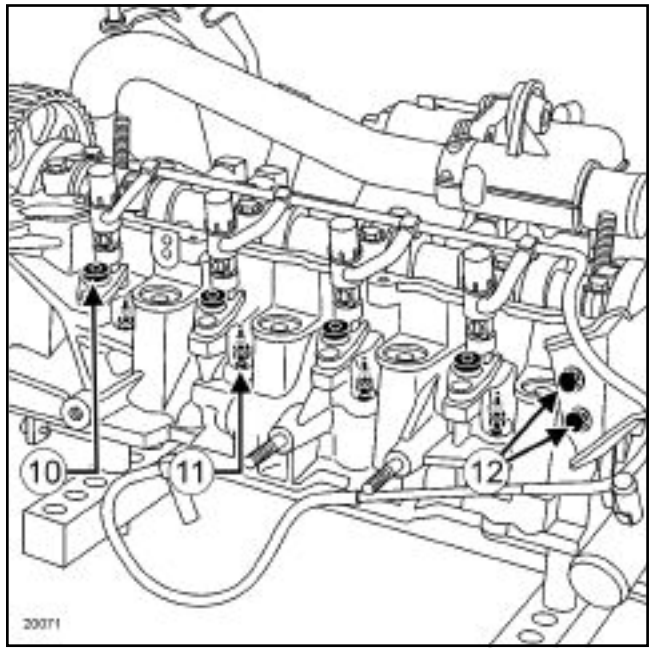

20071

Remove:

- the injector clamp bolts (**10**) ,
- the injectors,
- the heater plugs (**11**) using a hinged wrench,
- the engine lifting eye (flywheel end) bolts (**12**) ,
- the engine lifting eye (flywheel end),

K9K, and 260 or 270 or 272 or 700 or 702 or 704 or 706 or 710 or 712 or 722 or 724 or 728 or 729 or 750 or 752 or 760 or 762 or 790

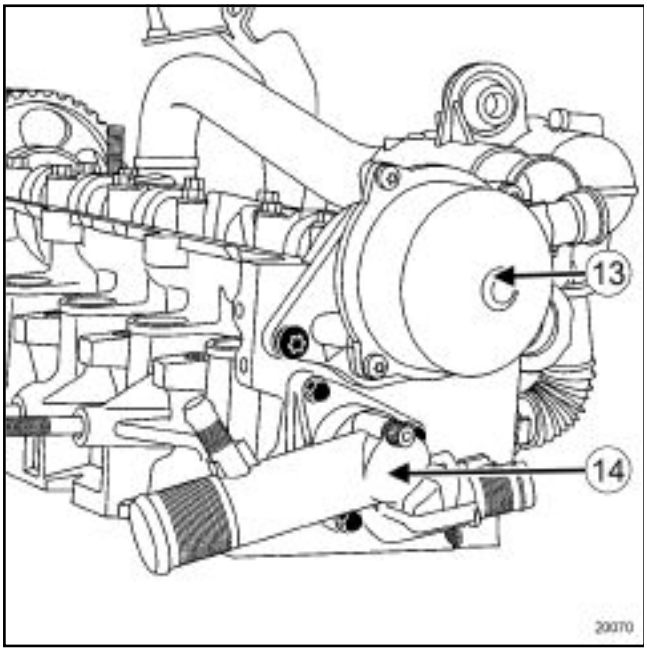

20070

Remove:

- the vacuum pump bolts (**13**) ,
- the vacuum pump,
- the cylinder head coolant outlet unit mounting bolts (**14**)
- the cylinder head coolant outlet housing

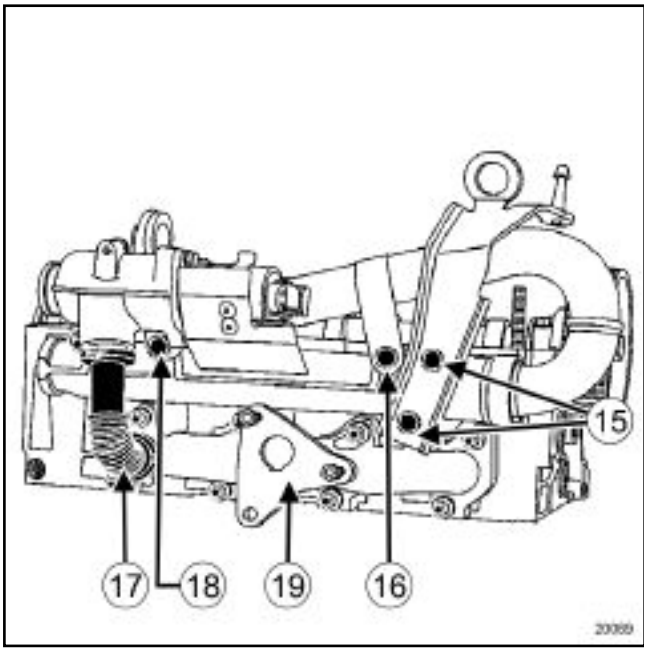

20069

Remove:

- the engine lifting eye (timing end) mounting bolts (**15**) ,
- the engine lifting eye (timing end),
- the exhaust gas recirculation pipe clips (**17**) using the **(Mot. 1567)** ,
- the exhaust gas recirculation pipe,
- the air inlet duct mounting bolt (**16**) ,
- the inlet duct,
- the exhaust gas recirculation valve mounting bolts (**18**) ,
- the exhaust gas recirculation valve,
- the exhaust manifold mounting nuts (**19**) ,
- the exhaust manifold.

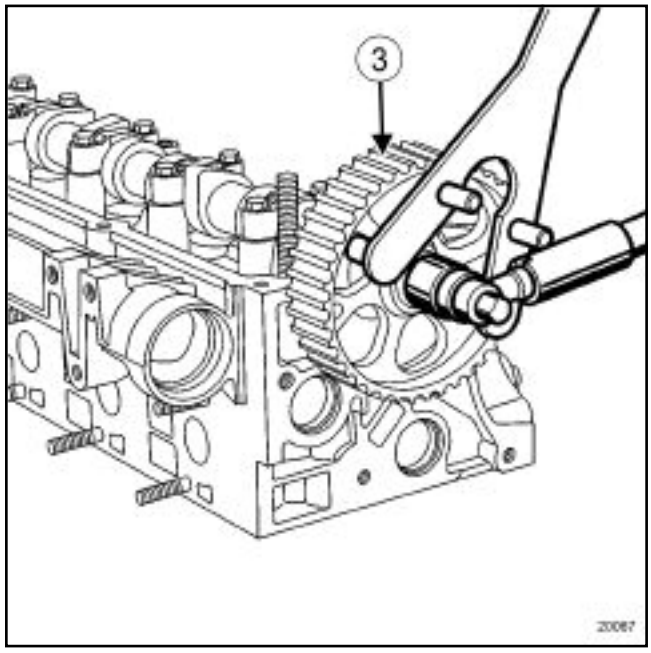

20067

Lock the camshaft pulley using the **(Mot. 799-01)**

Remove:

- the camshaft pulley mounting nut,
- the camshaft pulley.

K9K, and 260 or 270 or 272 or 700 or 702 or 704 or 706 or 710 or 712 or 722 or 724 or 728 or 729 or 750 or 752 or 760 or 762 or 790

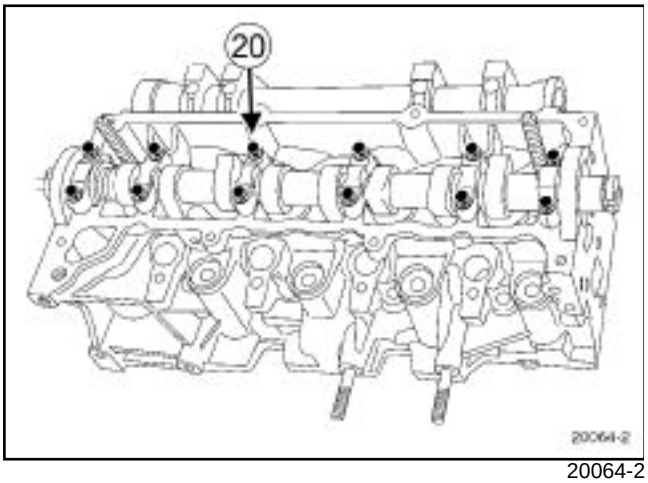

20064-2

Remove:

- the camshaft bearing cap mounting bolts (**20**) ,
- the camshaft bearing caps.

Remove the camshaft.

Note:

It is essential to match the valve tappets to their respective cylinders using an indelible marker.

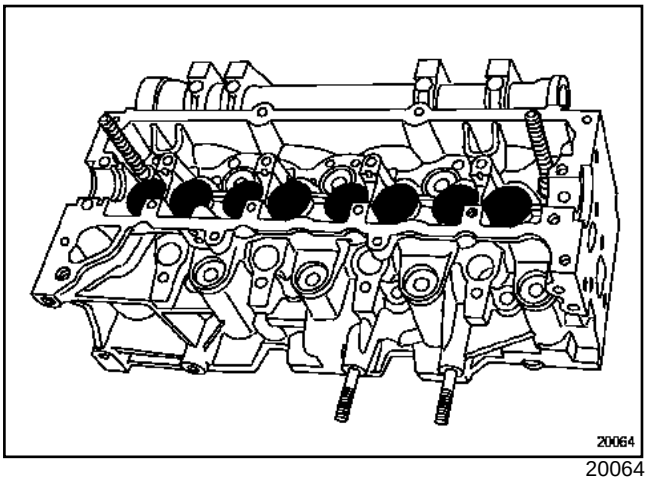

20064

Remove the valve tappets.

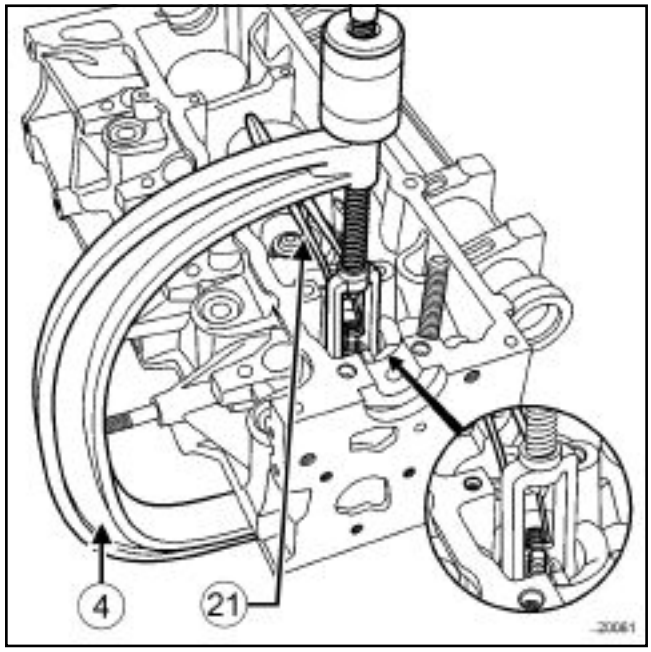

20061

Compress the valve springs using the **(Mot. 1502)** (**4**) or using a valve spring compressor.

Remove:

- the collets using tweezers ***(21)*** ,
- the valve spring upper cups,
- the valve springs,
- the valves.

Cylinder head: Dismantling

K9K, and 274 or 276 or 714 or 716 or 718 or 766 or 768

Special tooling required	
Mot. 1566	Spanner for removing high pressure pipes.
Mot. 1746	Offset spanner for tightening high pressure pump pipes.
Mot. 799-01	Timing gear wheel immobiliser.
Mot. 1502	Valve lifting tool for removing valves.

I - RECOMMENDATIONS FOR REPAIR

IMPORTANT

- It is essential to follow the cleanliness guidelines (see **10A**, **Engine and lower engine assembly**, **Engine: Precautions for repair**, page **10A-4**) ,
- Wear latex gloves while using the cleaning product,
- Wear goggles with side guards,

WARNING

Do not blast with compressed air once the fuel circuit is open, otherwise impurities may enter the system. Use cleaning cloths only, if necessary.

II - PARTS AND CONSUMABLES FOR THE REPAIR

Consumables

- Set of blanking plugs, part no. **77 01 206 804** ,
- Cleaning cloths, part no. **77 11 211 707** ,
- Brake cleaner, part no. **77 11 226 128** ,
- Injector cleaner, part no. **77 11 224 188** ,

III - EQUIPMENT REQUIRED

- Protective goggles (with side guards),
- Latex protective gloves,
- Indelible pencil,
- Plastic bags,
- Valve wrench,
- Tweezers,
- Wrench for the high-pressure pipes,
- Crow foot wrench,
- Wrench with hinge for heater plugs,
- Male torx sockets.

IV - STRIPPING THE CYLINDER HEAD

Cleaning the high-pressure pipe unions (see **10A**, **Engine and lower engine assembly**, **Engine: Precautions for repair**, page **10A-4**) .

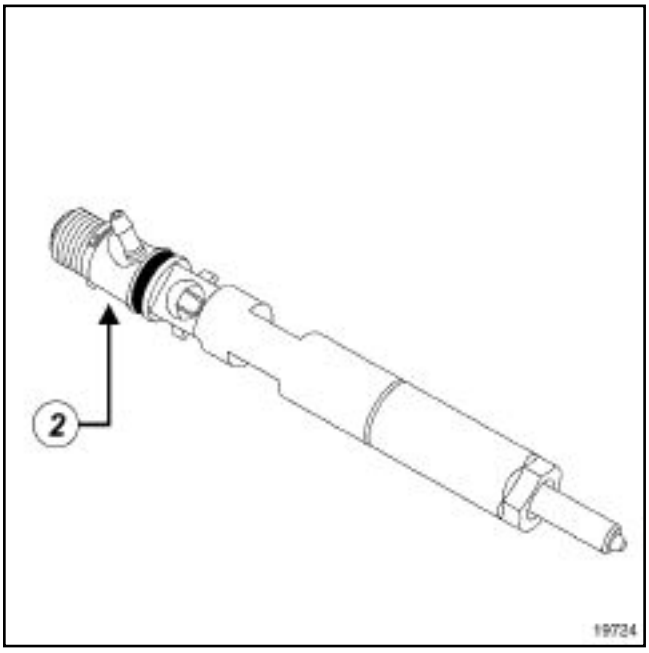

19724

Note:

When loosening the high-pressure pipes, it is essential to hold injector intermediate union (2) .

K9K, and 274 or 276 or 714 or 716 or 718 or 766 or 768

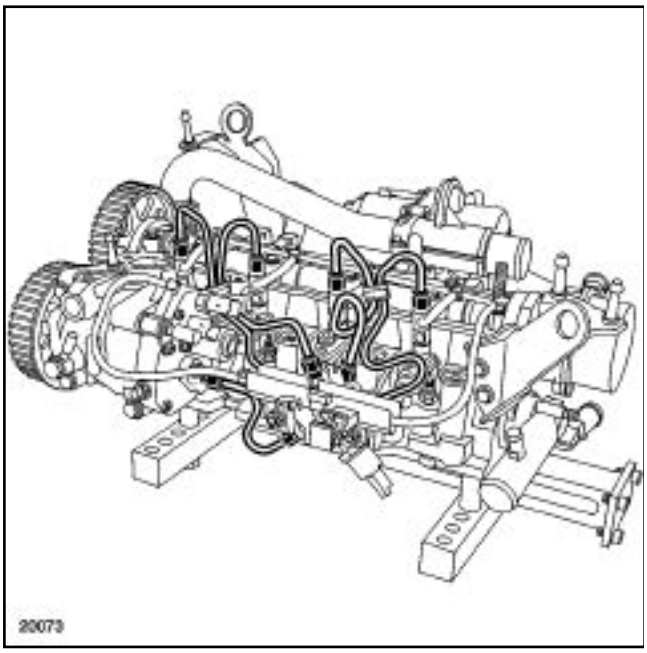

20073

Remove the high-pressure pipes using the **(Mot. 1566)** , **(Mot. 1746)** or with a pipe wrench.

Fit plugs to maintain cleanliness:

- on the high-pressure pump,
- on the rail,
- on the injectors.

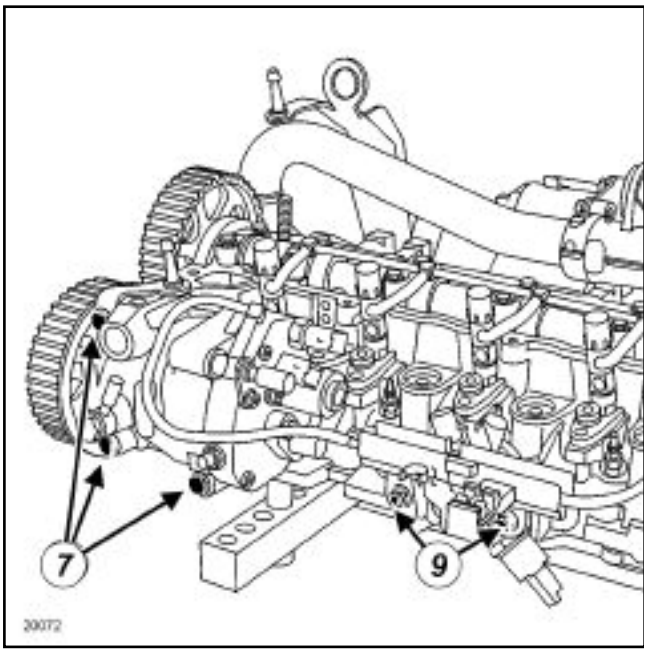

20072

Remove:

- the high-pressure pump mounting bolts (**7**) ,
- the high-pressure pump,
- the high-pressure pump mounting nuts (**9**) ,
- the rail.

Note:

It is essential to mark the injectors relative to their cylinders using an indelible pencil.

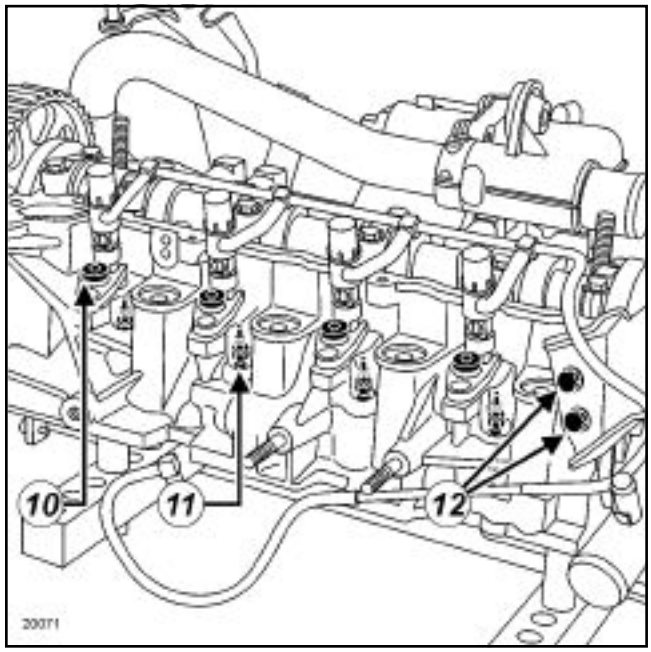

20071

Remove:

- the injector bracket bolts (**10**) ,
- the injectors,
- the heater plugs (**11**) , using a wrench with hinge,
- the bolts (**12**) from the engine lifting eye (flywheel end),
- the engine lifting eye (flywheel end),

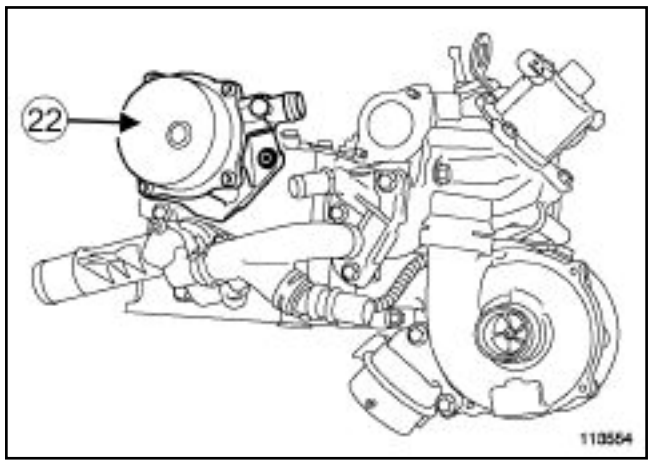

113554

Remove:

- the mounting bolts from the vacuum pump (**22**) ,

K9K, and 274 or 276 or 714 or 716 or 718 or 766 or 768

- the vacuum pump.

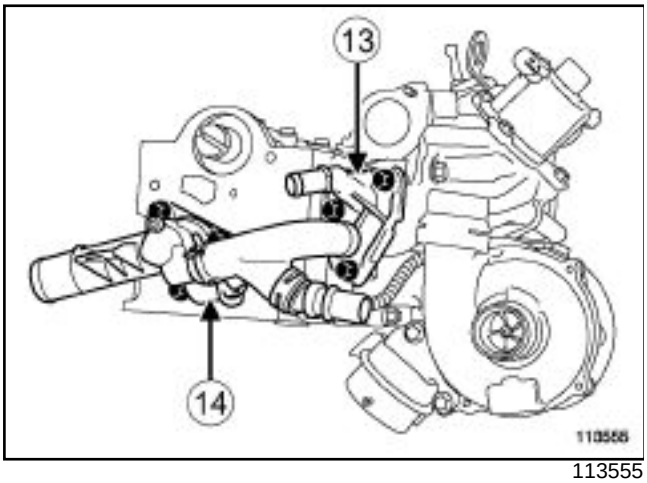

113555

Remove:

- the EGR exchanger cover bolts (**13**) ,
- the EGR exchanger cover,
- the cylinder head coolant outlet unit bolts, (**14**)
- the cylinder head coolant outlet housing

Remove the camshaft pulley.

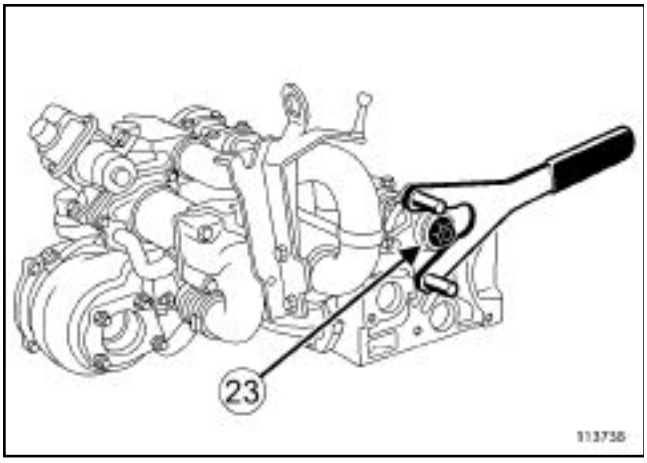

113738

Immobilise the camshaft pulley hub using the **(Mot. 799-01)** .

Remove:

- the camshaft pulley hub mounting nut (**23**) ,
- the camshaft pulley hub.

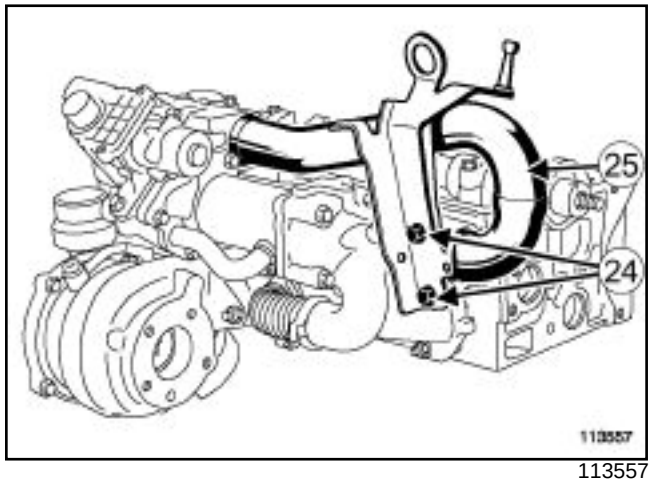

113557

Remove:

- the engine lifting eye mounting bolts (**24**) (timing end),
- the engine lifting eye (timing end),
- the inlet duct.

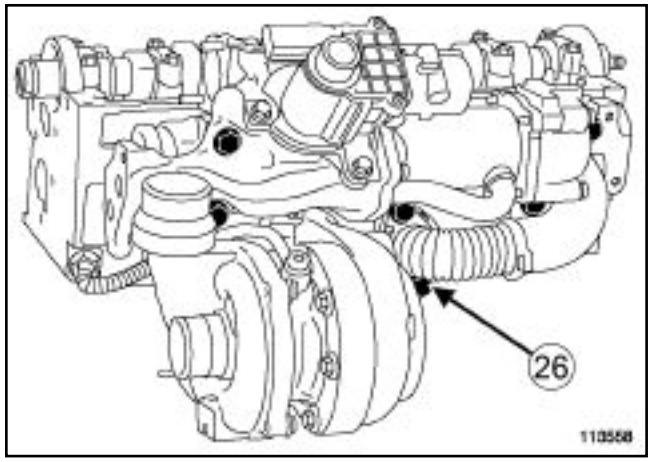

113558

Remove:

- the six mounting bolts (**26**) from the EGR valve-exchanger assembly,
- the EGR valve-exchanger assembly.

K9K, and 274 or 276 or 714 or 716 or 718 or 766 or 768

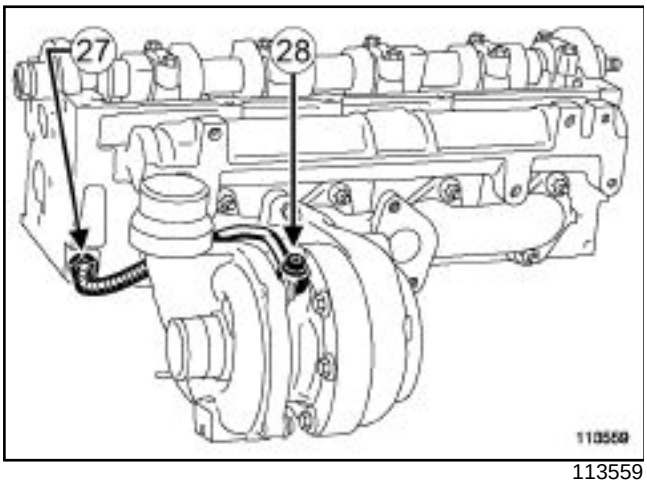

113559

Loosen the mounting nut (**27**) from the turbocharger oil supply pipe (cylinder head end).

Remove:

- the mounting bolt (**28**) from the turbocharger oil supply pipe (turbocharger end),
- the turbocharger oil supply pipe.

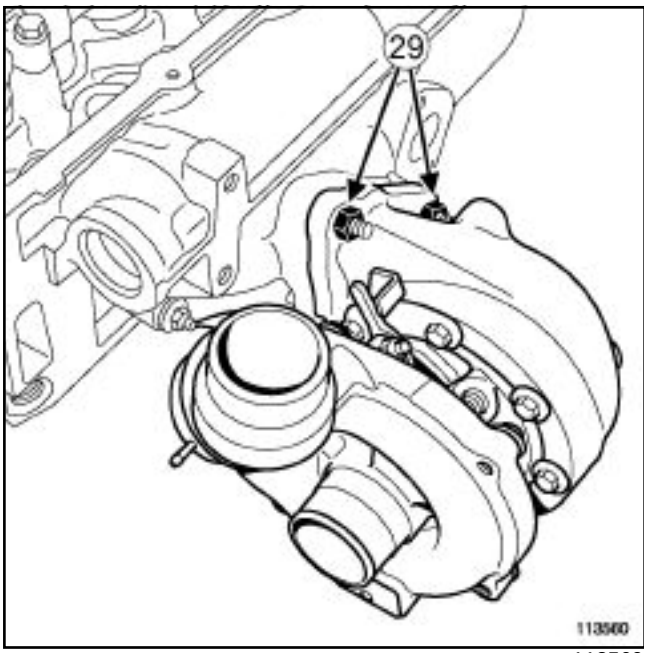

113560

Remove:

- the three turbocharger mounting nuts (**29**) ,
- the turbocharger.

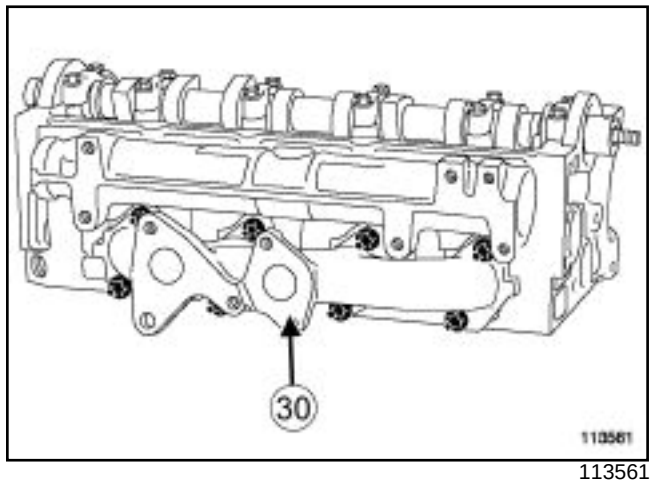

113561

Remove:

- the mounting nuts from the exhaust manifold (**30**) ,
- the exhaust manifold.

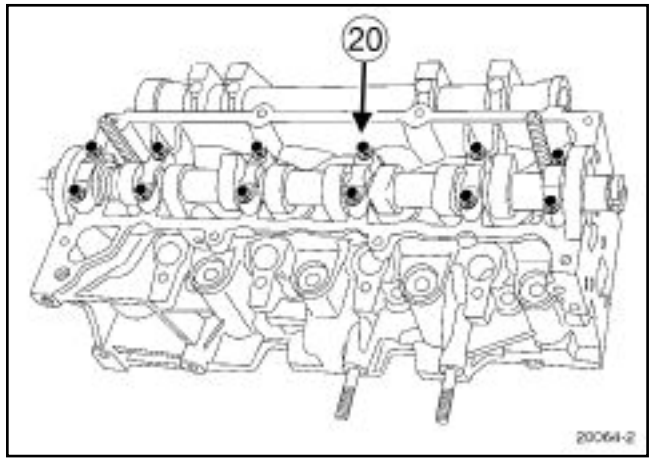

20064-2

Remove:

- the mounting bolts (**20**) from the camshaft bearing caps,
- the camshaft bearing caps.

Remove the camshaft.

Note:

It is essential to mark the valve pushrods relative to their cylinders using an indelible pencil.

K9K, and 274 or 276 or 714 or 716 or 718 or 766 or 768

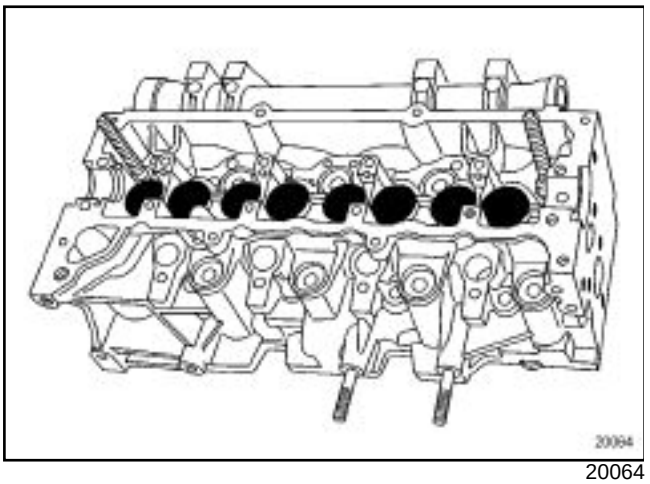

20064

Remove the valve pushrods.

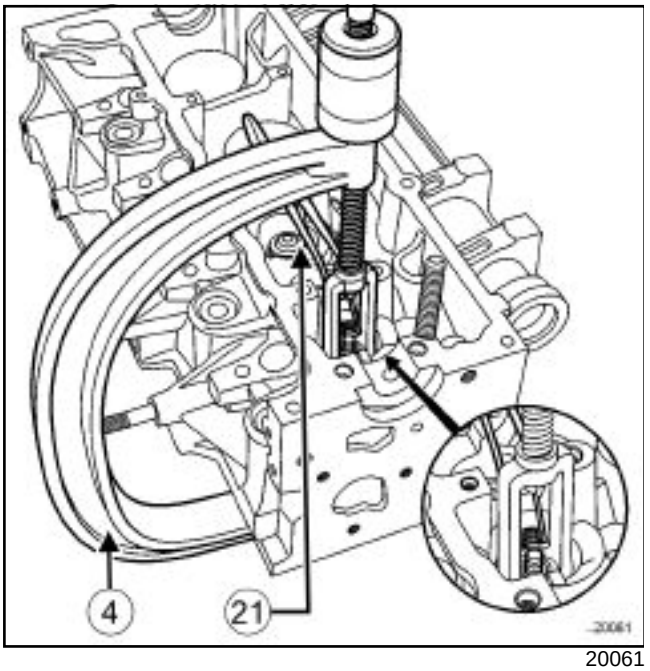

20061

Compress the valve springs using the **(Mot. 1502)** (**4**) or a valve wrench.

Remove:

- the cotters using tweezers ***(21)*** ,
- the valve spring upper cups,
- the valve springs,
- the valves.

K9K, and 732 or 764

Special tooling required	
Mot. 1746	Offset spanner for tightening high pressure pump pipes.
Mot. 1566	Spanner for removing high pressure pipes.
Mot. 799-01	Timing gear wheel immobiliser.
Mot. 1502	Valve lifting tool for removing valves.

I - RECOMMENDATIONS FOR REPAIR

IMPORTANT

- It is essential to follow the cleanliness guidelines (see **10A**, **Engine and lower engine assembly**, **Engine: Precautions for repair**, page **10A-4**) ,
- Wear latex gloves while using the cleaning product,
- Wear goggles with side guards,

WARNING

Do not blast with compressed air once the fuel circuit is open, otherwise impurities may enter the system. Use cleaning cloths only, if necessary.

II - PARTS AND CONSUMABLES FOR THE REPAIRS

Consumables

- Set of blanking plugs, part no. **77 01 476 857** ,
- Cleaning cloths, part no. **77 11 211 707** ,
- Brake cleaner, part no. **77 11 226 128** ,
- Injector cleaner, part no. **77 11 224 188** ,

III - EQUIPMENT REQUIRED

- Protective goggles (with side guards),
- Latex protective gloves,
- Indelible pencil,
- Plastic bags,
- Valve wrench,
- Tweezers,
- Flat-blade and thin screwdriver,
- Wrench for the high-pressure pipes,
- Crow foot wrench,
- Wrench with hinge for heater plugs,
- Male torx sockets.

IV - STRIPPING THE CYLINDER HEAD

Cleaning the high-pressure pipe unions (see **10A**, **Engine and lower engine assembly**, **Engine: Precautions for repair**, page **10A-4**) .

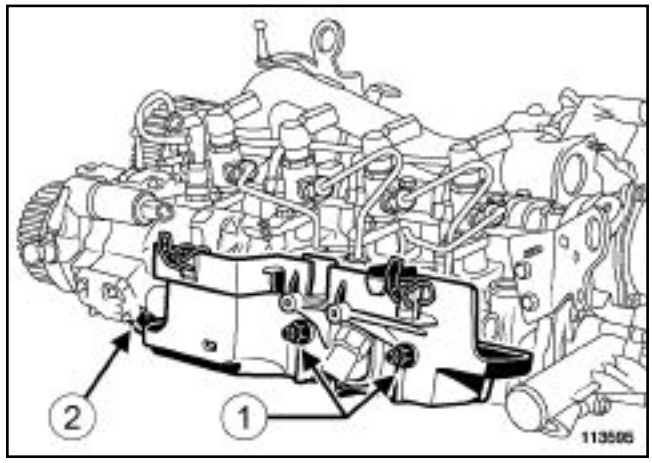

113595

Remove:

- the mounting bolt (**2**) and nuts (**1**) from the high-pressure protector,
- the high-pressure protector.

Clean the high-pressure pipe unions (see **10A**, **Engine and lower engine assembly**, **Engine: Precautions for repair**, page **10A-4**) .

K9K, and 732 or 764

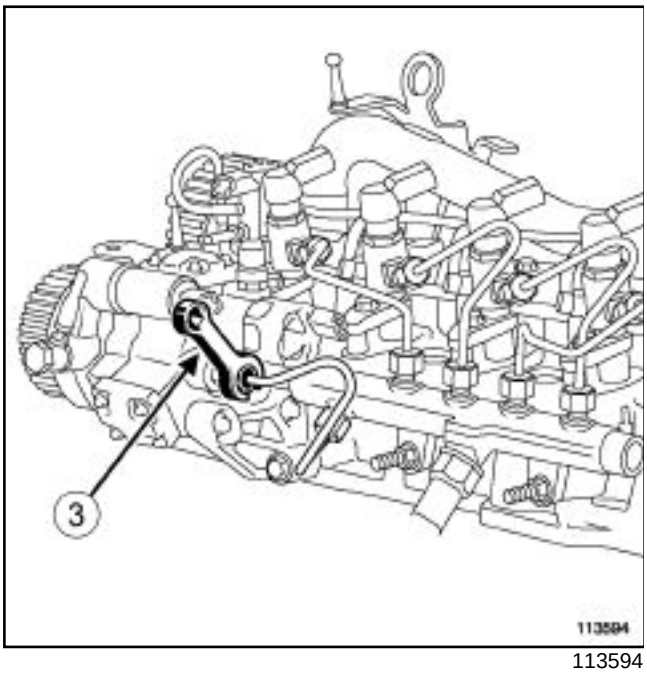

113594

Loosen the high-pressure pipe nut (high-pressure pump side) using the **(Mot. 1746)** (**3**) or a crow foot wrench.

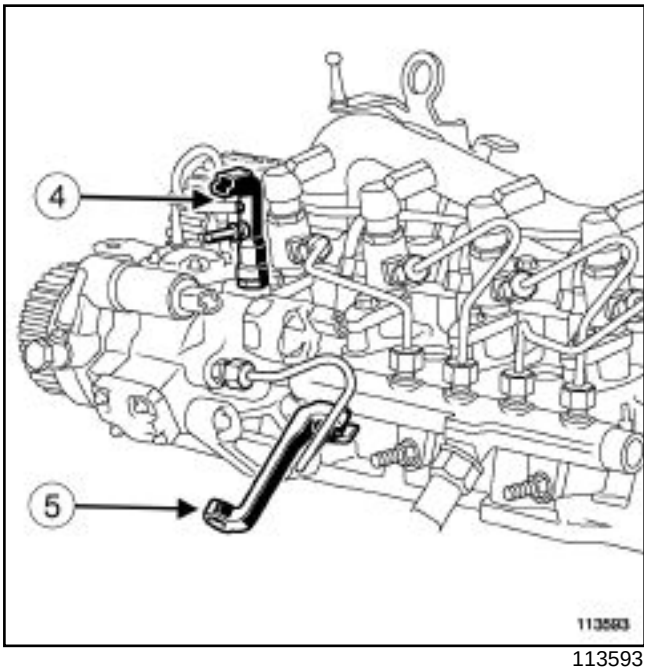

113593

Remove the high-pressure pump fuel return union (**4**) .

Loosen the high-pressure pipe nut (high-pressure pump side) using the **(Mot. 1566)** (**5**) or a pipe wrench.

Remove the high-pressure pipe between the high-pressure pump and the rail.

Fit plugs to maintain cleanliness:

- on the high-pressure pump,
- on the rail.

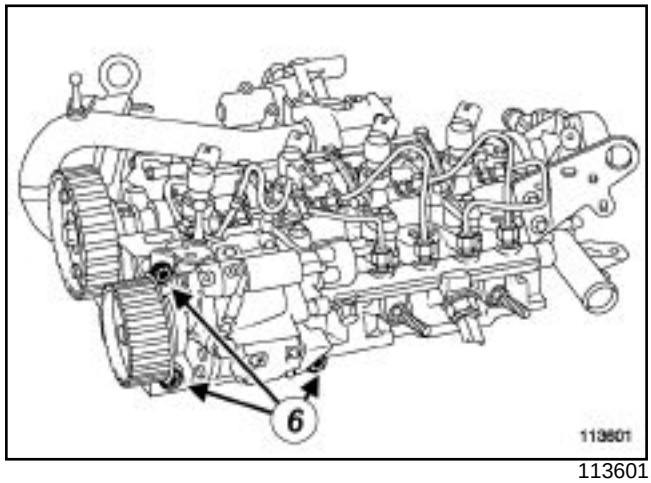

113601

Remove:

- the high-pressure pump mounting bolts (**6**) ,
- the high-pressure pump.

Note:

Take care not to completely remove the clip from its proper position as it may become deformed.

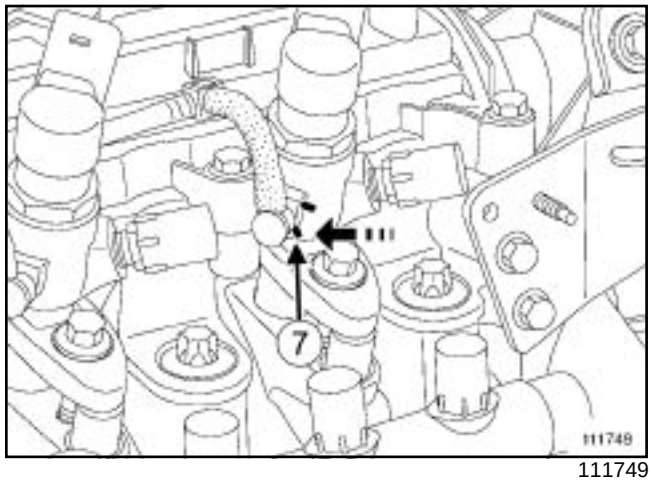

111749

Push in the direction of the arrow and at (**7**) on the lower section of the retaining clip of the fuel return pipe on the injector using a thin, flat-blade screwdriver.

K9K, and 732 or 764

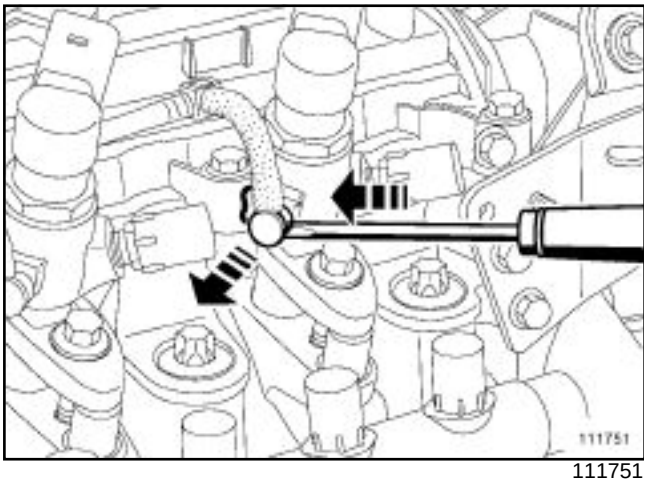

111751

Pushing the lower bracket of the retaining clip downwards, pull out the injector fuel return pipe union.

Remove the fuel return pipe from the injector.

Repeat the operation on the other fuel return pipe unions.

Fit the correct blanking plugs.

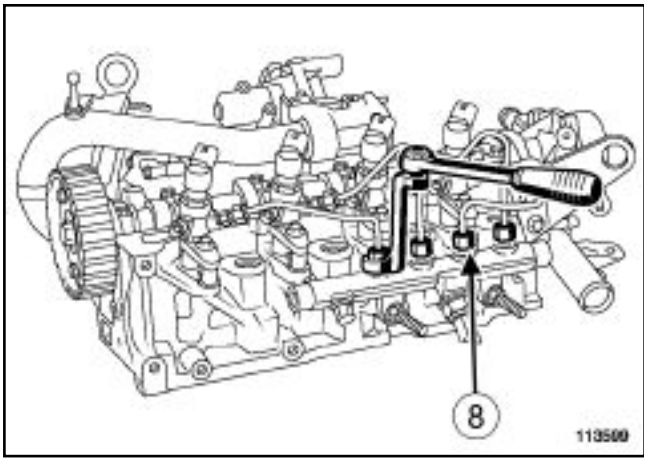

113599

Loosen the high-pressure pipe nuts on the rail side using the **(Mot. 1566)** or a pipe wrench.

Note:

When loosening the high-pressure pipe nuts, it is essential to hold the injector intermediate union with a wrench *(9)* .

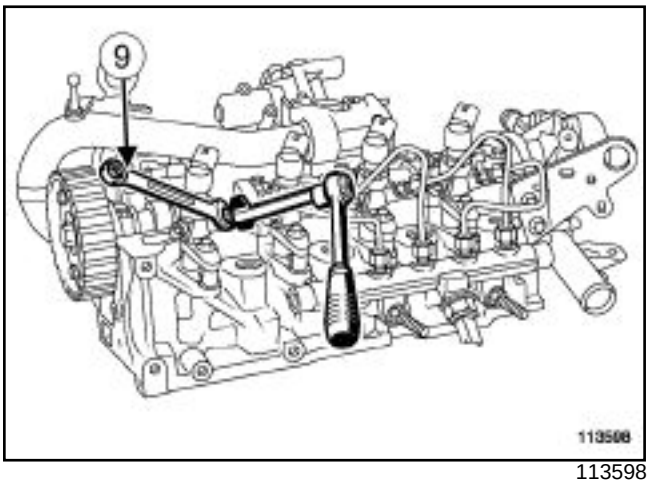

113598

Loosen the high-pressure pipe nuts on the injector side using the **(Mot. 1566)** or a pipe wrench, while holding the intermediate union with an open-jawed spanner.

Fit the correct blanking plugs.

Note:

It is essential to mark the injectors relative to their cylinders using an indelible pencil.

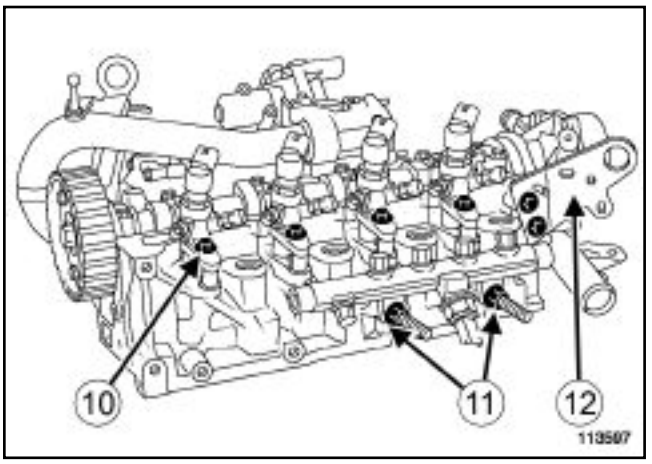

113597

Remove:

- the mounting bolts from the engine lifting eye (**12**) (timing end),
- the engine lifting eye,
- the high-pressure pump mounting nuts (**11**) ,
- the high-pressure rail,
- the injector bracket bolts (**10**) ,
- the injectors.

K9K, and 732 or 764

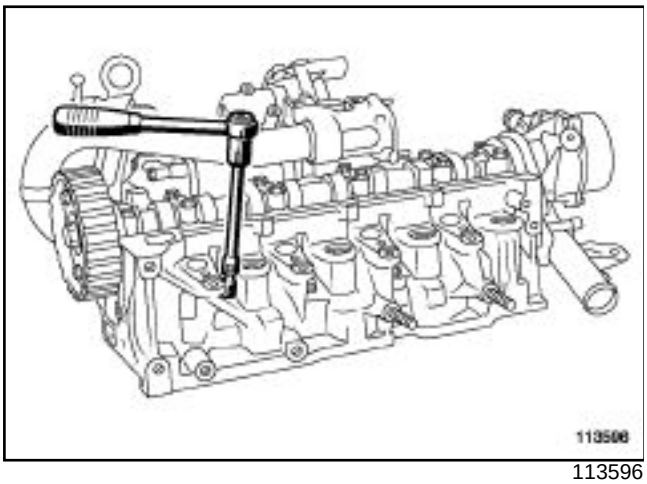

113596

Remove the heater plugs using a wrench with hinge,

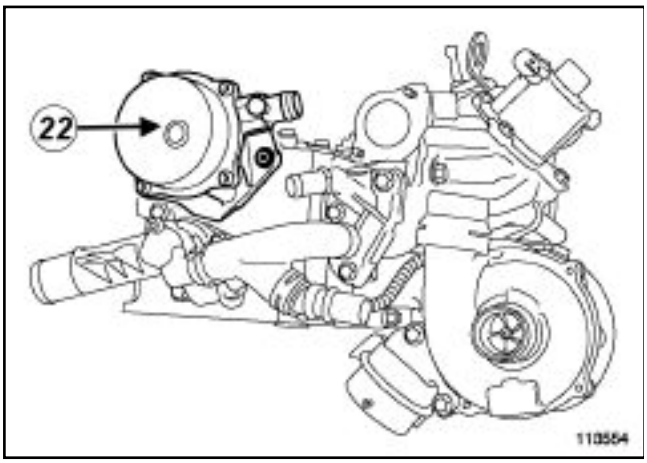

113554

Remove:

- the mounting bolts from the vacuum pump (**22**) ,
- the vacuum pump.

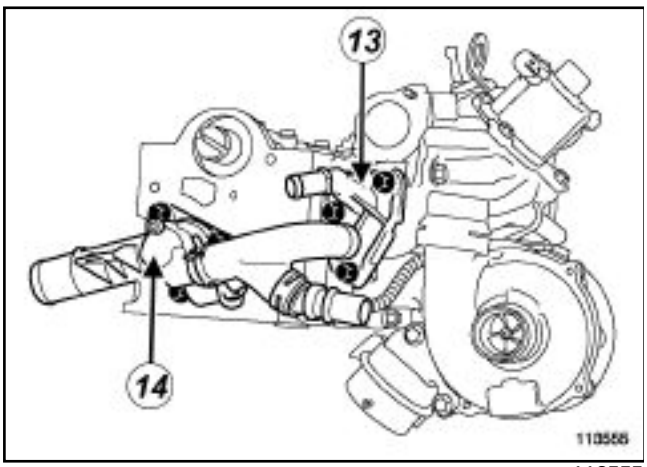

113555

Remove:

- the EGR exchanger cover bolts (**13**) ,
- the EGR exchanger cover,
- the cylinder head coolant outlet unit bolts (**14**) ,
- the cylinder head coolant outlet unit

Remove the camshaft pulley.

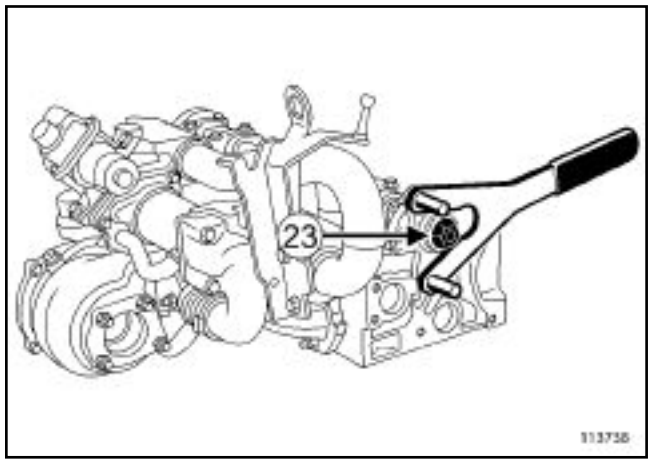

113738

Immobilise the camshaft pulley hub using the **(Mot. 799-01)** .

Remove:

- the mounting nut (**23**) from the camshaft pulley hub,
- the camshaft pulley hub.

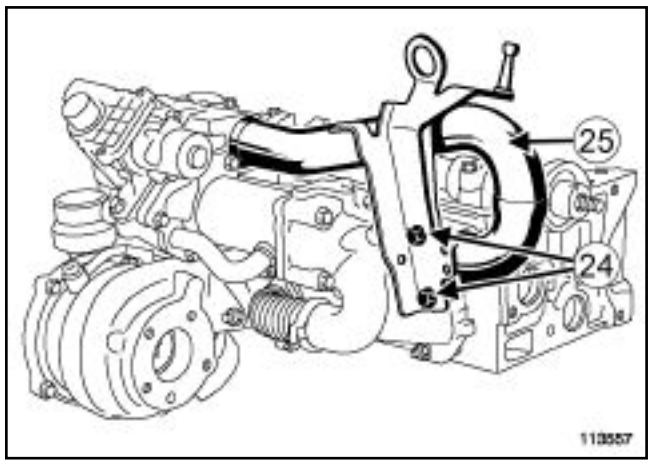

113557

Remove:

- the mounting bolts (**24**) from the engine lifting eye (timing end),
- the engine lifting eye (timing end),
- the inlet duct.

K9K, and 732 or 764

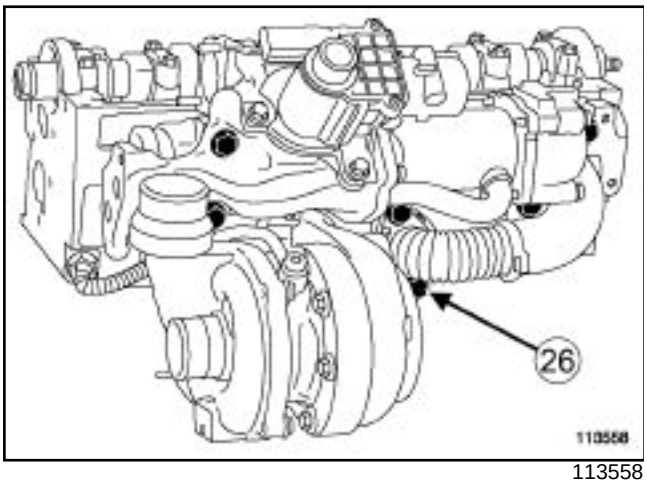

113558

Remove:

- the six mounting bolts (**26**) from the EGR valve-exchanger assembly,
- the EGR valve-exchanger assembly.

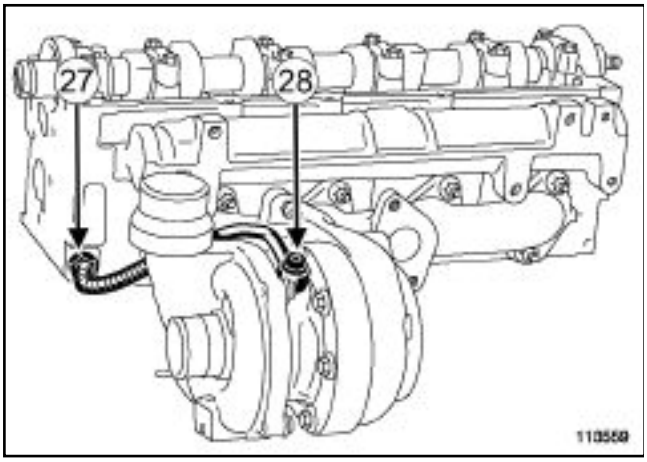

113559

Loosen the mounting nut (**27**) from the turbocharger oil supply pipe (cylinder head end).

Remove:

- the mounting nut (**28**) from the turbocharger oil supply pipe (turbocharger end),
- the turbocharger oil supply pipe.

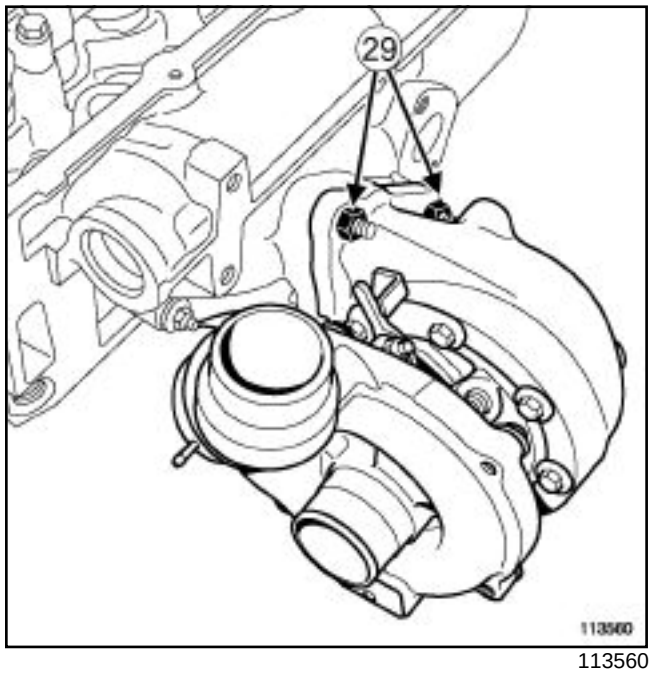

113560

Remove:

- the three turbocharger mounting nuts (**29**) ,
- the turbocharger.

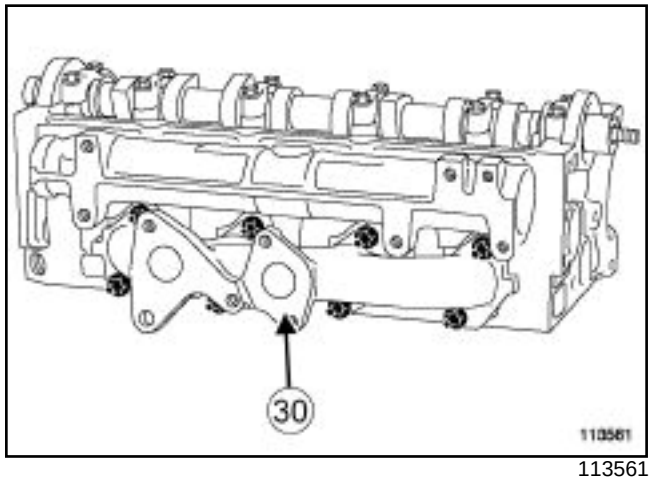

113561

Remove:

- the mounting nuts from the exhaust manifold (**30**) ,
- the exhaust manifold.

K9K, and 732 or 764

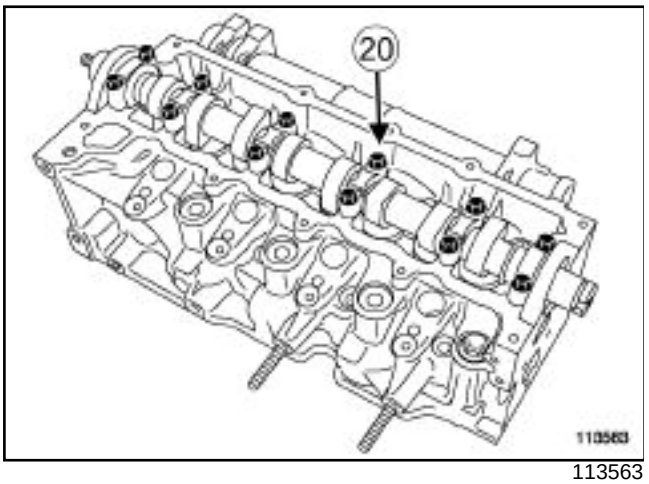

113563

Remove:

- the mounting bolts (**20**) from the camshaft bearing caps,
- the camshaft bearing caps.

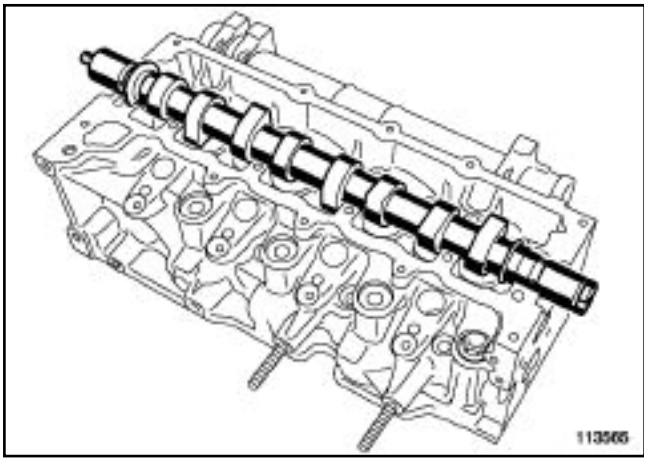

113565

Remove the camshaft.

Note:

It is essential to mark the valve pushrods relative to their cylinders using an indelible pencil.

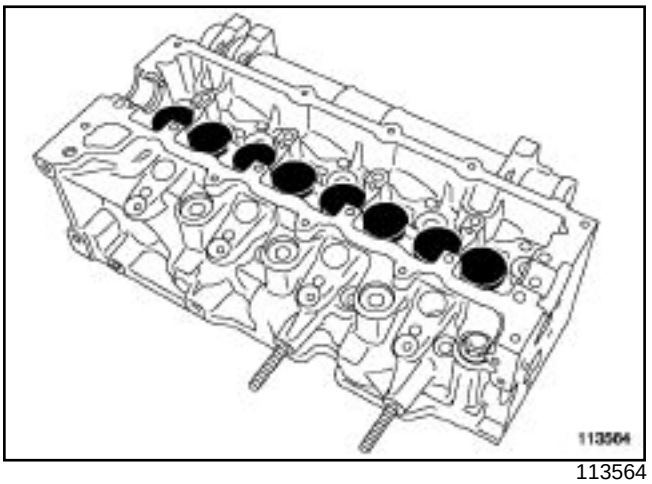

113564

Remove the valve pushrods.

K9K, and 732 or 764

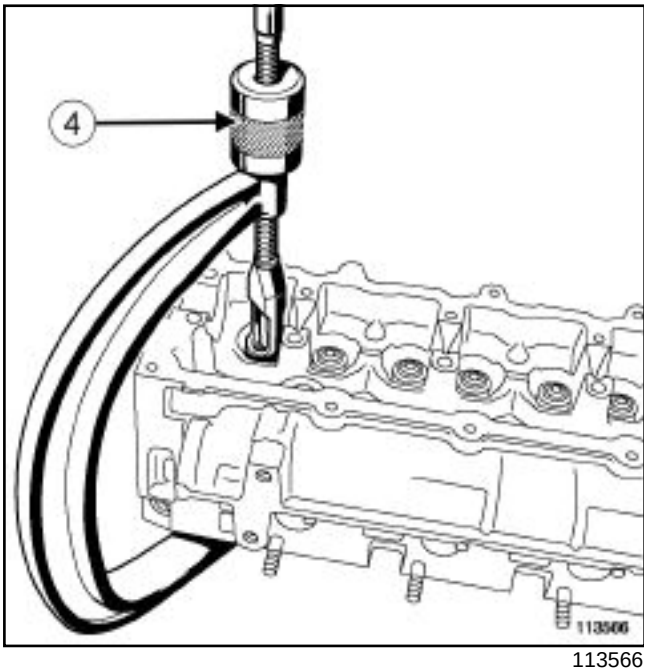

113566

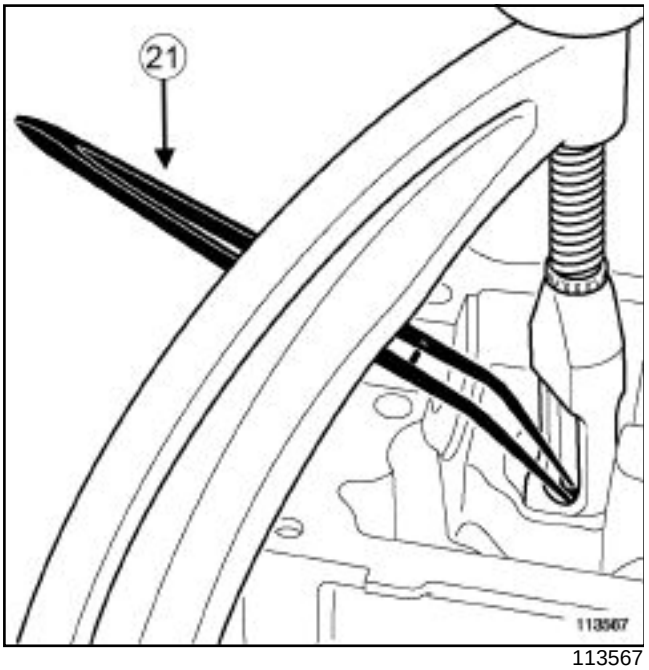

113567

Compress the valve springs using the **(Mot. 1502)** (**4**) or a valve wrench.

Remove:

- the cotters using tweezers ***(21)*** ,
- the valve spring upper cups,
- the valve springs,
- the valves.

Upper engine: Cleaning

Special tooling required	
Mot. 1729	Pin wrench for removing the EGR valve.
Mot. 1757	EGR solenoid valve actuator.

I - RECOMMENDATIONS FOR REPAIR

IMPORTANT

Do not scratch the aluminium sealing surfaces.

Wear goggles.

Wear gloves during the operation.

WARNING

Do not allow this product to drip on to the paintwork.

Clean the cylinder head carefully to prevent foreign bodies from entering the oil supply and return galleries.

Failure to follow this advice could lead to the blocking of the various oil inlet galleries, which would quickly result in engine damage.

When cleaning parts, it is essential to not knock the parts against each other, or their mating faces may be damaged and therefore their adjustments may be altered, which could damage the engine.

Cleaning recommendation for the EGR solenoid valve :

- do not wet the electrical part of the solenoid valve with the cleaning product.
- keep the solenoid valve tilted with the connector at the top.
- only use brushes with plastic or non-corrosive metal (brass) bristles.
- cleaning using hard or corrosive tools (e.g: screwdriver) may damage the valves or their shafts, and lead to leaking valves with a consequent loss of power. Or a loss of the upper valve leading to destruction of the engine.

II - PARTS AND CONSUMABLES FOR THE REPAIR

Consumables

- Décapjoint, part no. **77 01 405 952** ,
- Grey sanding pad, part no. **77 01 405 943** .
- Carburettor cleaner, part no. **77 11 171 437** ,

III - EQUIPMENT REQUIRED

- Protective goggles,
- Protective gloves,
- Wooden spatula,
- Brushes with plastic or non-scratch metal (brass) bristles,
- Compressed air gun,
- Cleaning fountain,
- Cleaning bench.

IV - CLEANING THE UPPER ENGINE

Apply the **Décapjoint** product to the sections to be cleaned.

Leave for around ten minutes.

Remove residues with a wooden spatulas

Finish cleaning the parts using a grey polishing pad.

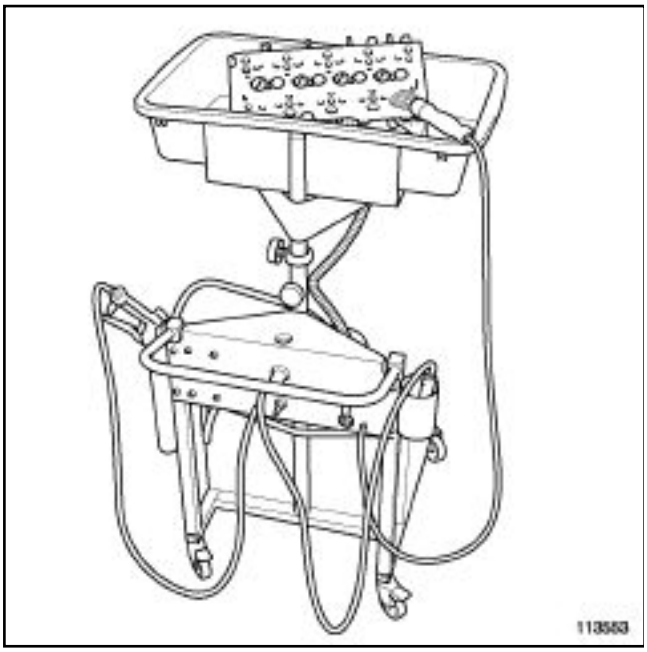

113553

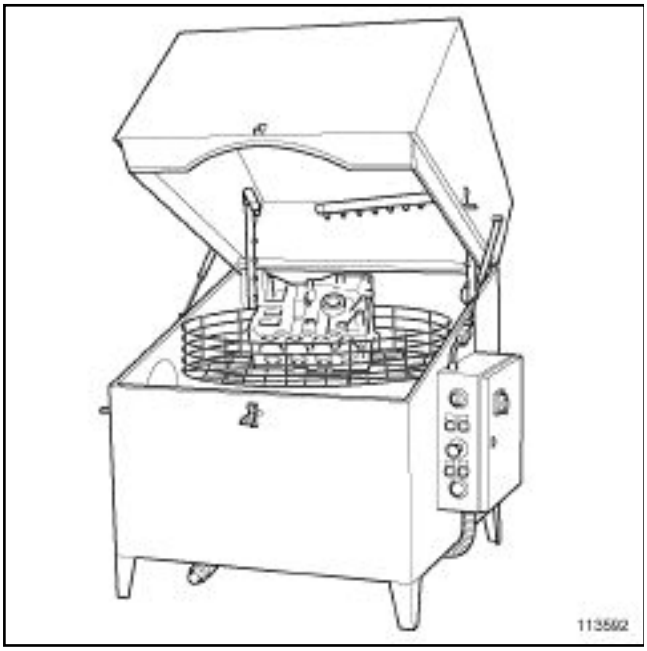

113592

Wash the cylinder head parts using a cleaning fountain or a heated cleaning bath.

V - CLEANING THE EGR SOLENOID VALVE

K9K, and 260 or 270 or 272 or 700 or 702 or 704 or 706 or 710 or 712 or 722 or 728 or 729 or 750 or 752

Place the exhaust gas recirculation unit in a vice with clamping jaws.

Remove the EGR solenoid valve mounting bolts.

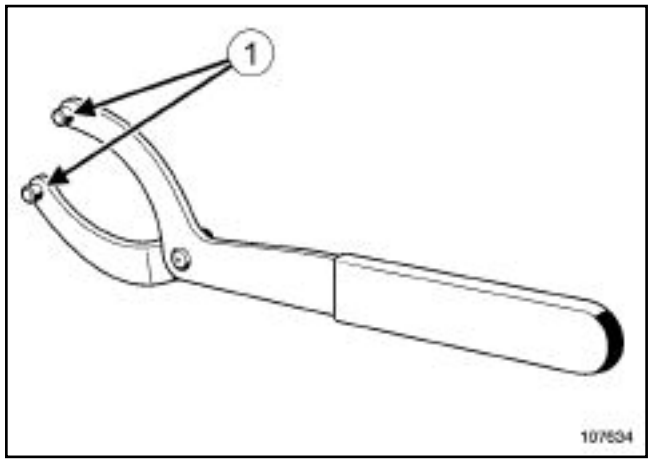

107634

Fully insert the spigots (**1**) of tool **(Mot. 1729)** in the mounting holes of the EGR solenoid valve.

Remove the EGR solenoid valve, with small rotating movements to detach the EGR solenoid valve from its housing.

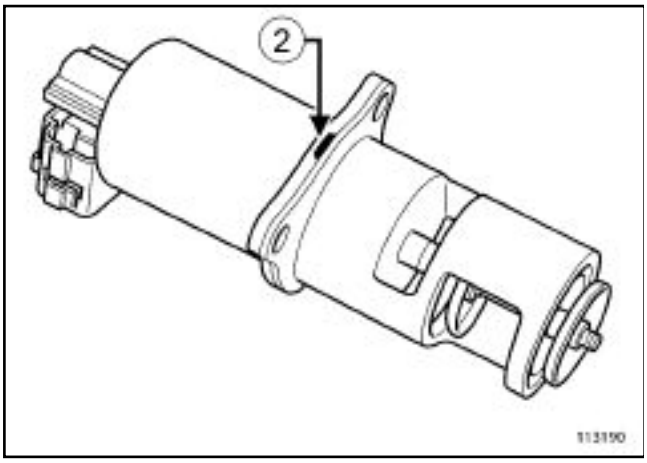

113190

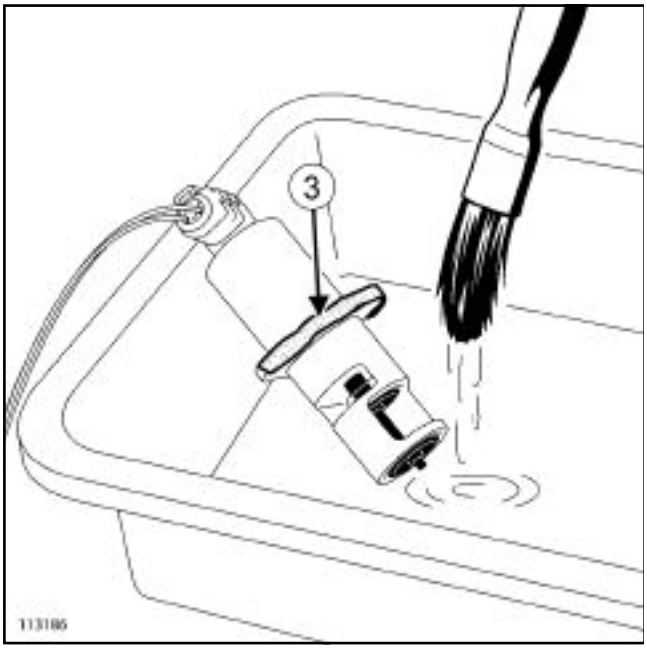

113186

Protect the vent holes (**2**) of the solenoid valve using adhesive tape (**3**) .

Freely wet the mechanical part only of the EGR solenoid valve with cleaning fluid, while brushing the EGR solenoid valve for **1 min** .

Note:

The EGR solenoid valve actuator tool can be used to check the solenoid valve.

An indicator will sound in case of:

- incorrect connection of the tool to the solenoid valve,
- solenoid valve short circuit,
- break in the solenoid valve circuit.

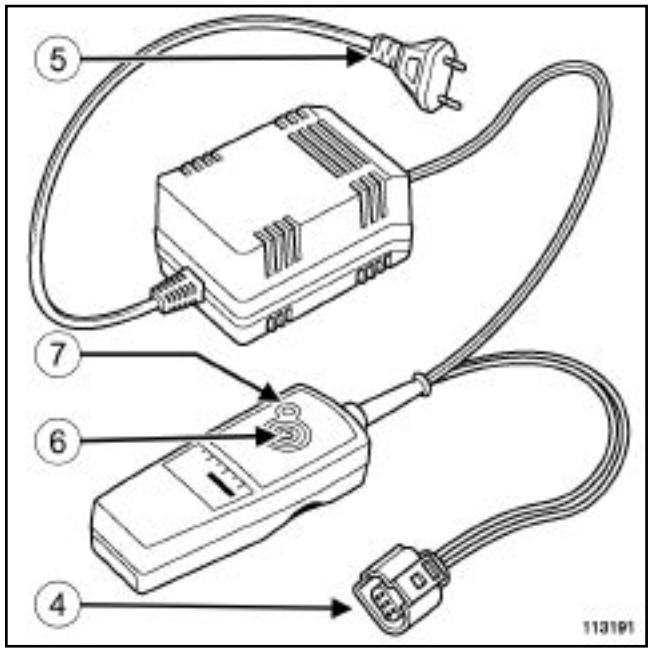

113191

Connect:

- the connector (**4**) of the **(Mot. 1757)** to the solenoid valve,
- the adaptor (**5**) of the **(Mot. 1757)** to a power supply.

Briefly press the button ***(6)*** to open the solenoid valve valves.

Note:

In the open position (with power to the solenoid valve) the warning light ***(7)*** is on.

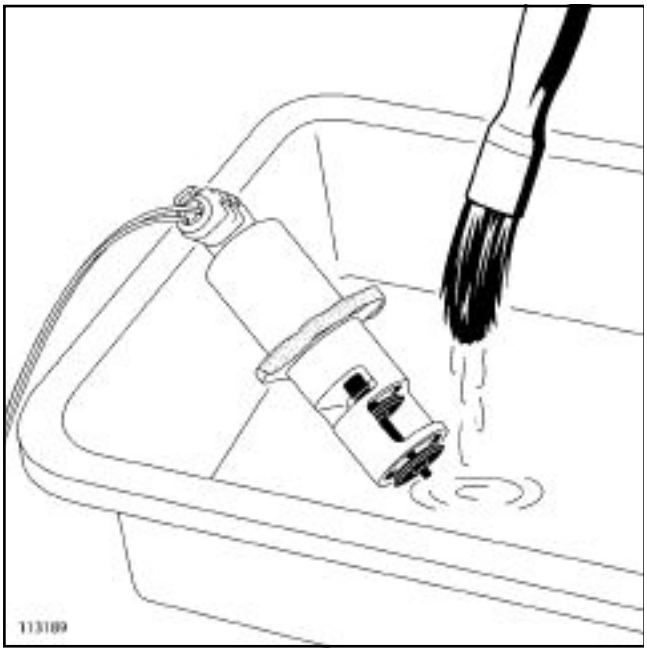

113189

Clean the mechanical part of the solenoid valve by simultaneously scrubbing and drenching with cleaning product for **2 min** , paying particular attention to:

- the valve seats,
- the surfaces of the valves,
- the shaft guide of the valves.

Briefly press the button ***(6)*** to close the solenoid valve valves.

Start an open/close cycle of the solenoid valve using the **(Mot. 1757)** keeping the button pressed ***(6)*** .

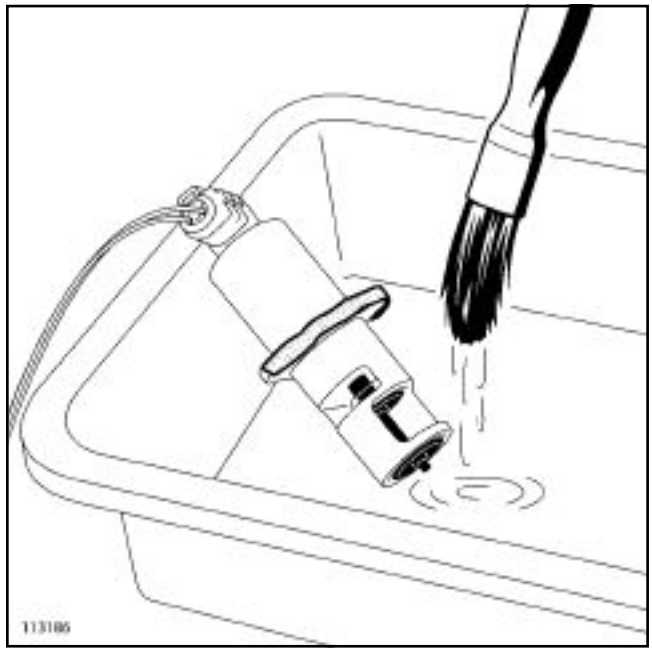

113186

Clean the mechanical section of the solenoid valve (during the open/close cycle) by scrubbing and drenching with cleaning product (simultaneously), paying attention to:

- the valve seats,
- the surfaces of the valves,
- the shaft guide of the valves.

Briefly press the button ***(6)*** to open the solenoid valve valves.

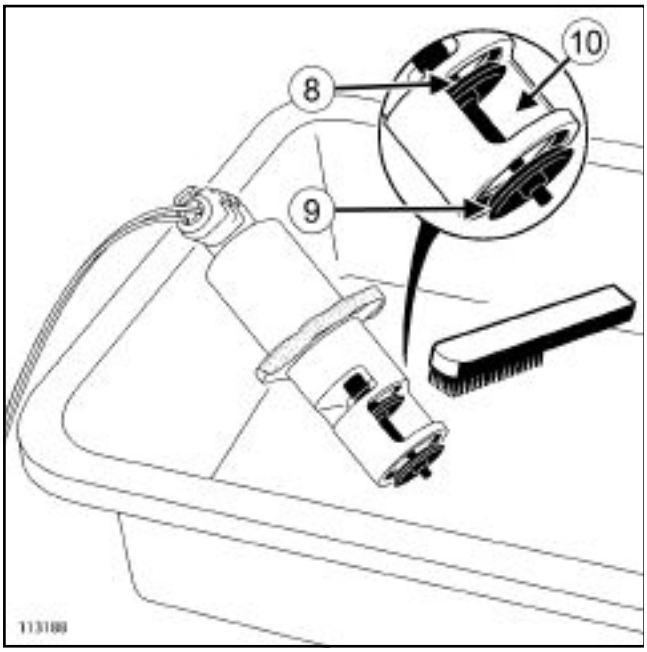

113188

Scrub the upper valve (**9**) over its entire surface and circumference.

Scrub the part of the lower valve (**8**) which is accessible through the window (**10**) .

Hold the upper valve (**9**) .

Quarter turn the valve.

Scrub the part of the lower valve (**8**) which is accessible through the window (**10**) .

Continue until the valve has been cleaned over its entire circumference.

Briefly press the button ***(6)*** to close the solenoid valve valves.

Run the open/close cycle of the solenoid valve twice using the **(Mot. 1757)** keeping the button pressed ***(6)*** .

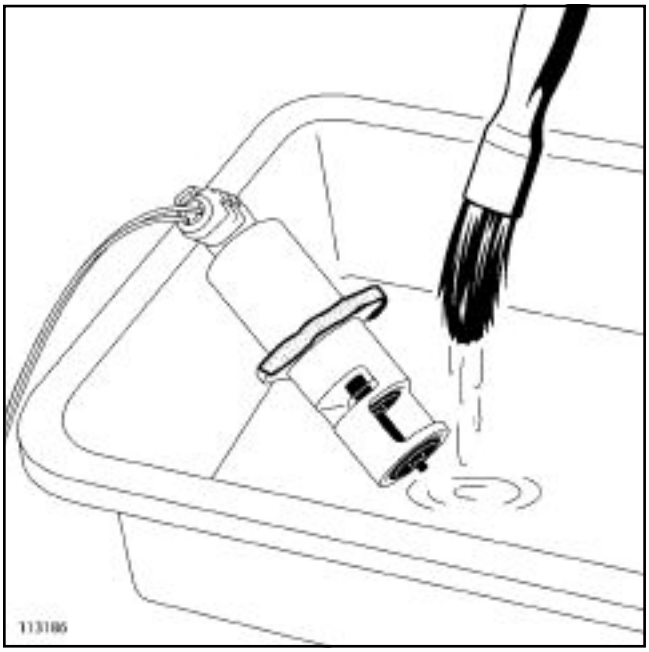

113186

Clean the mechanical part of the solenoid valve (during the open/close cycle) by scrubbing and drenching with cleaning product (simultaneously), paying attention to:

- the valve seats,

- the surfaces of the valves,

- the shaft guide of the valves.

Check there are no bristles from the brush in the solenoid valve.

Briefly press the button ***(6)*** to open the solenoid valve valves.

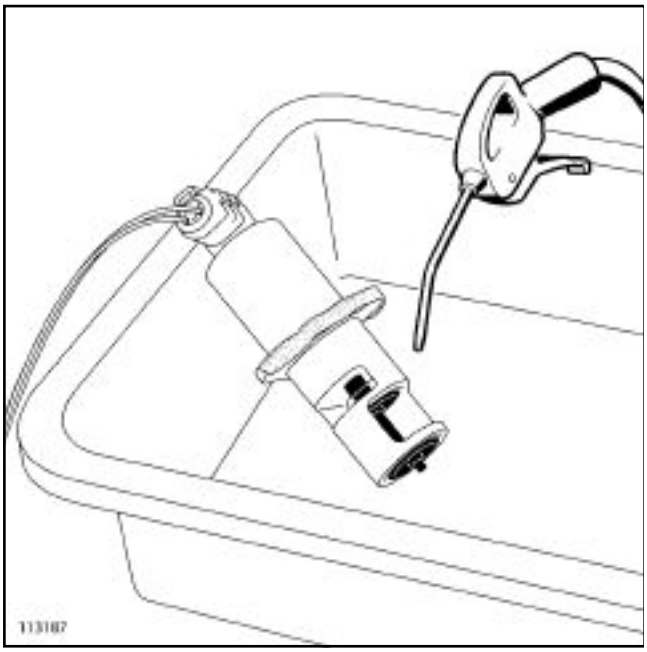

113187

Blow the solenoid valve dry using a compressed air gun.

Briefly press the button ***(6)*** to close the solenoid valve valves.

Remove the adhesive tape from the vent holes of the solenoid valve.

Special tooling required	
Mot. 588	Cylinder block liner clamps.
Mot. 251-01	Dial gauge support.
Mot. 252-01	Dial gauge support thrust plate.

I - RECOMMENDATIONS FOR REPAIR

> **WARNING**
> Parts should be clean before examining and testing them.

II - EQUIPMENT REQUIRED

- Torque wrench and cylinder head bolt tightening gauge (angular measuring type),
- Torque/angle wrench,
- Radial play measuring tape.
- Tool for checking the valve spring loading
- Pressure/vacuum pump
- Sliding calliper,
- Depth gauge
- Mortice gauge,
- Micrometer,
- Dial gauge,
- Body jig bench and a pair of v-blocks.
- Magnetic holder,
- Multimeter,
- The valve stem seal fitting kit,
- The cylinder head test tools,
- Set of shims,
- Cylinder head rule.

III - CHECKING THE UPPER ENGINE

1 - Check height of cylinder head

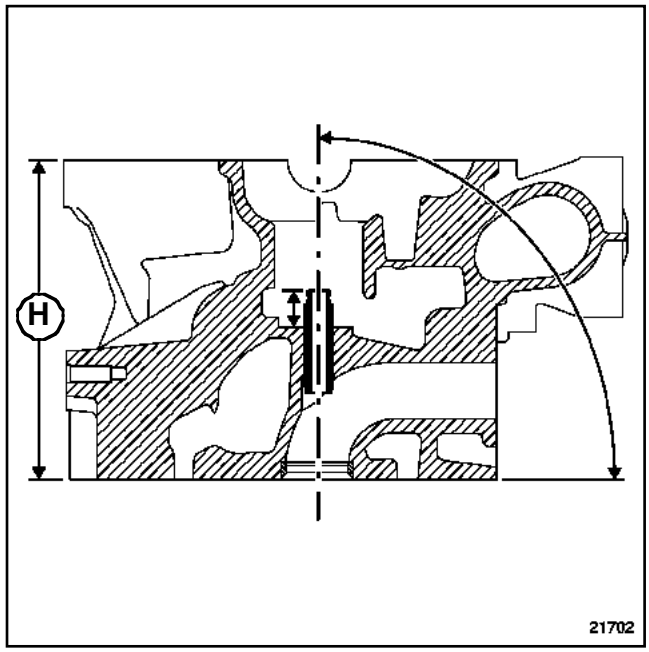

21702

Measure the height of the cylinder head (**H**) which should be **127 mm** using a mortice gauge.

2 - Checking the cylinder head gasket face

Use a cylinder head adjuster and set of feeler gauges to check the gasket face bow.

Maximum distortion: **0.05 mm**

The cylinder head cannot be adjusted.

3 - Checking the cylinder head seal

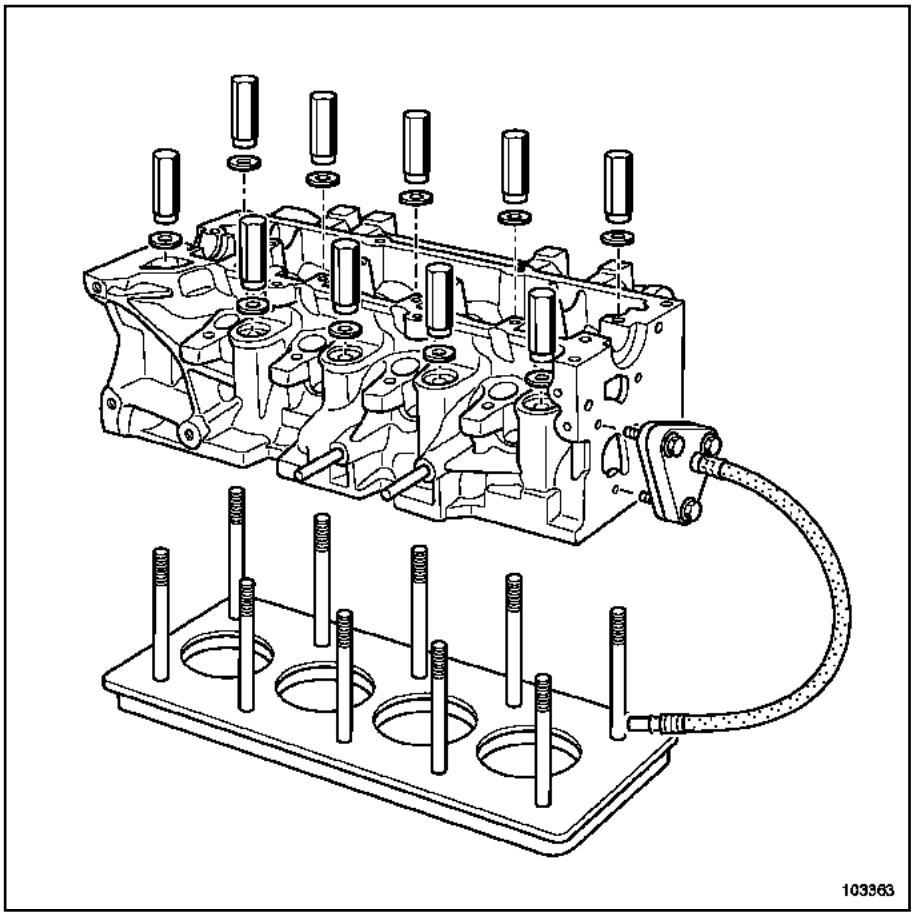

103363

Test the cylinder head for possible cracks with the cylinder head test kit.

For the use of the cylinder head test unit (see **Technical Note 2781E**).

4 - Cam height checks

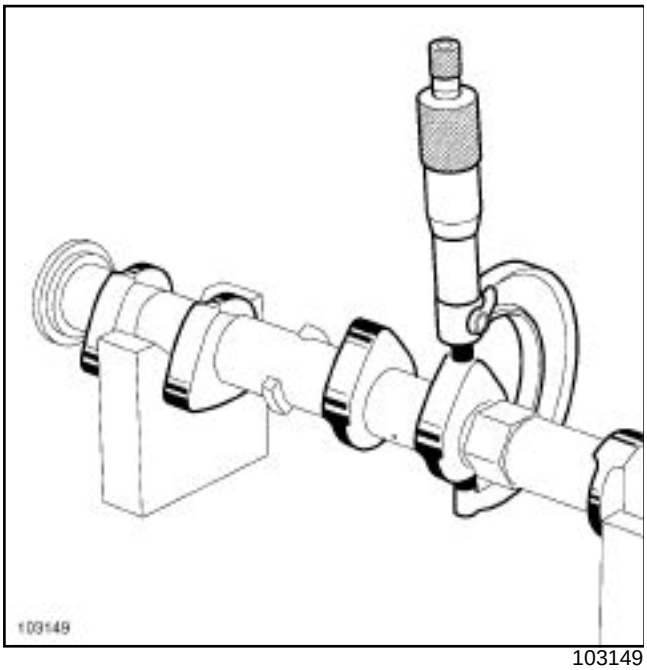

103149

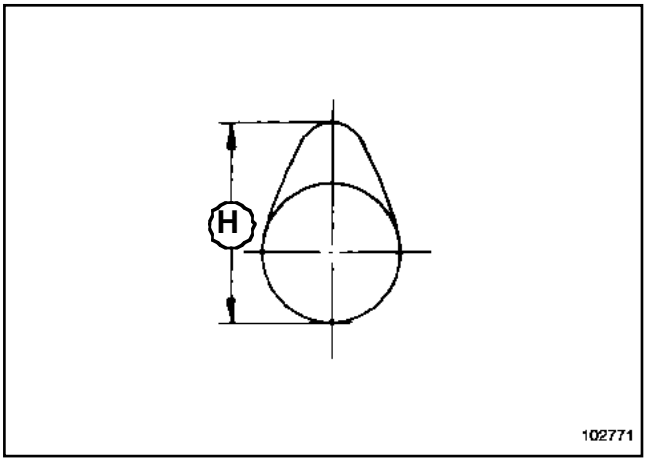

102771

Position camshaft bearings 2 and 4 on the v-blocks.

Using a micrometer, measure the height of the cams (**H**) which should be:

- Inlet: **44.015 ± 0.03 mm** ,
- Exhaust: **44.595 ± 0.03 mm** .

5 - Check the camshaft bearing diameters

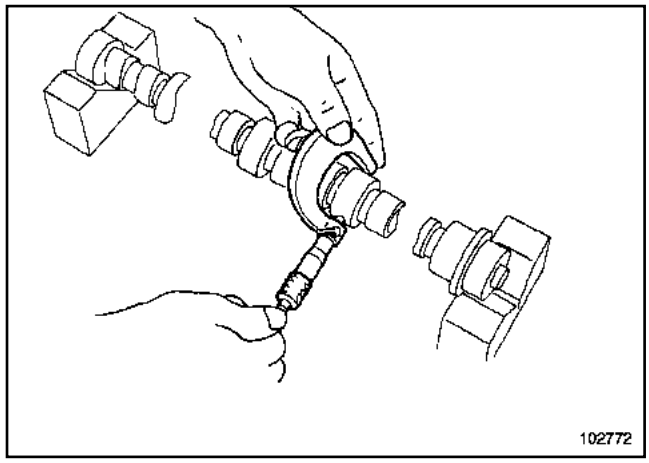

102772

Using a micrometer, measure the external diameter of each camshaft bearing:

- bearing nos. 1,2,3,4,5: **24.9895 ± 0.0105 mm** ,
- bearing no. 6: **27.9895 ± 0.0105 mm** .

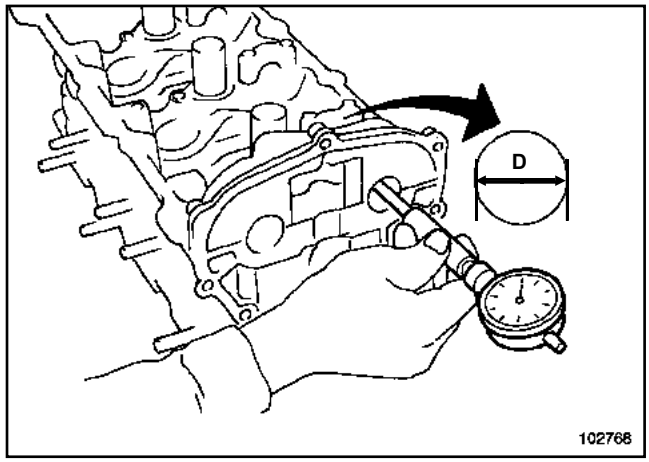

102768

Using a micrometer, measure the internal diameter of each cylinder head bearing:

- bearings No.1, 2, 3, 4, 5: **25.05 ± 0.01 mm** ,
- bearing No.6: **28.05 ± 0.01 mm** .

6 - Checking camshaft end play

Refit the camshaft.

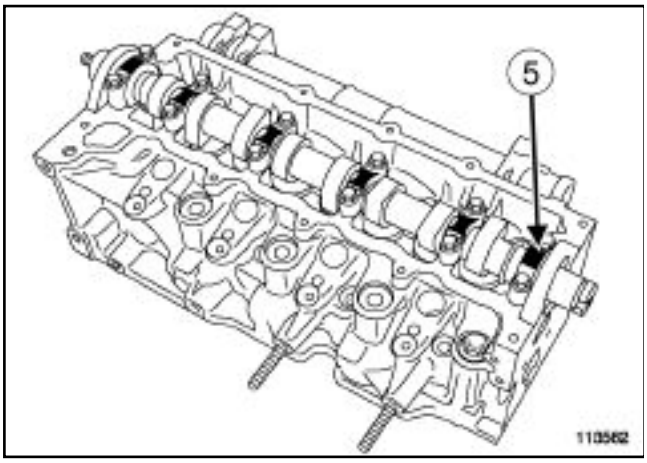

113562

Refit the camshaft bearing caps (observing their original positions, bearing No. 1 (**5**) engine flywheel end).

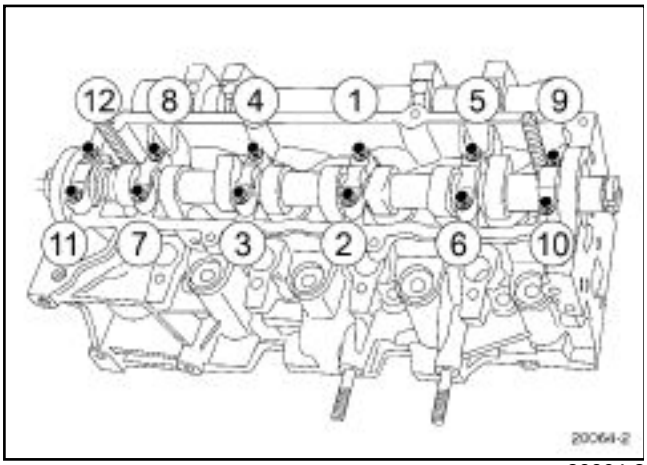

20064-2

Tighten to torque and in order **the crankshaft bearing cap mounting bolts (11 Nm)** .

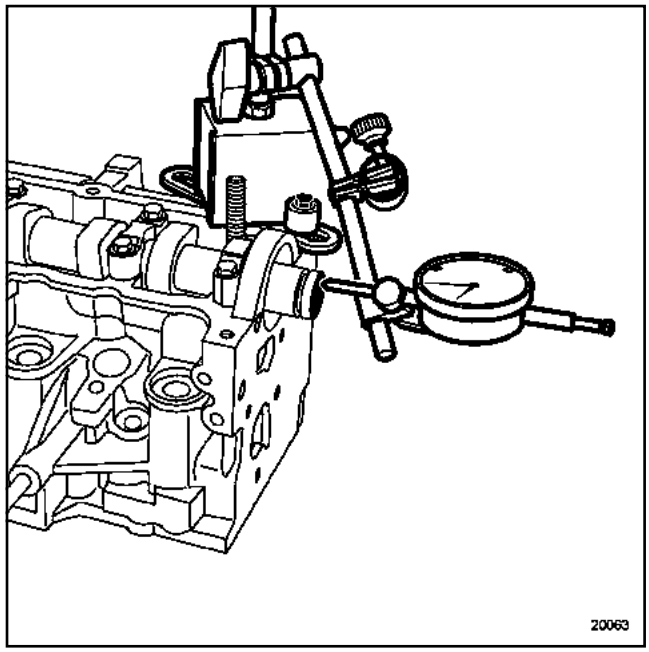

20063

Place the **(Mot. 588)** on the cylinder head, fixing it using the rocker cover bolt and a cross piece with dimensions as follows:

- external diameter **18 mm** ,

- internal diameter **9 mm** ,

- height **15 mm** .

Fix the magnetic holder to the cylinder head.

Using a dial gauge, measure the longitudinal gap which should be between **0.08 and 0.178 mm** .

Remove:

- the camshaft bearing caps,

- the camshaft.

7 - Checking the camshaft diametric clearance

Remove any oil that may be on the camshaft bearings and the camshaft bearing caps.

Refit the camshaft.

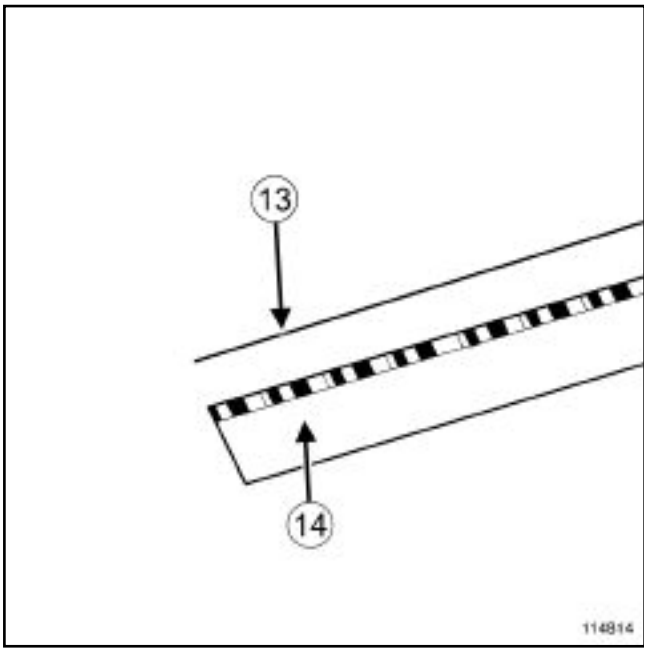

114814

Cut pieces of measuring wire (**13**) .

Place the wire in the camshaft shaft.

> Note:
>
> Do not allow the camshaft to turn during the operation in order to avoid distorting the measurement.

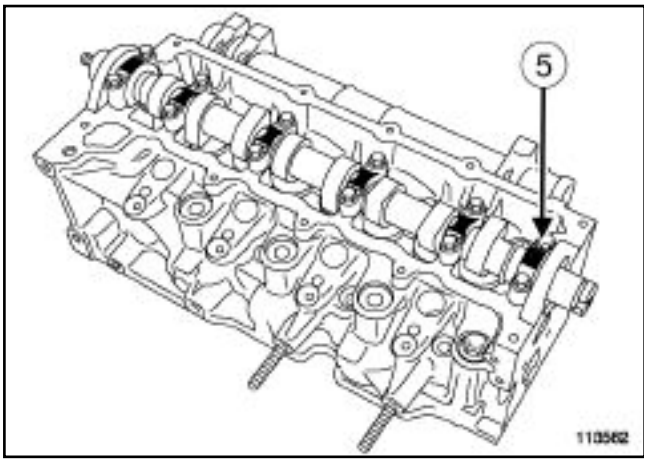

113562

Refit the camshaft bearing caps (observing their original positions, bearing No. 1 (**5**) engine flywheel end).

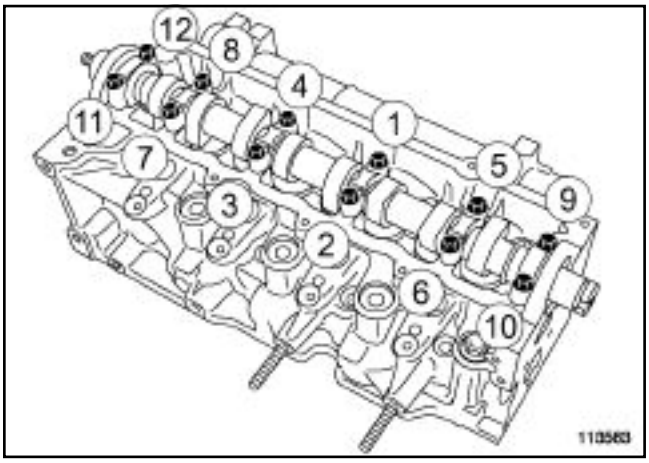

113563

Tighten to torque and in order **the crankshaft bearing cap mounting bolts (11 Nm)** .

Remove:

- the camshaft bearing caps,

- the camshaft.

Measure the flattening of the clearance measuring wire using the packaging paper ***(14)*** .

Check the value of the diametric clearance which should be between **0.04 and 0.081 mm** .

Clean any traces of measuring wire off the camshaft and the camshaft bearing caps.

8 - Checking the radial deviation of the camshaft

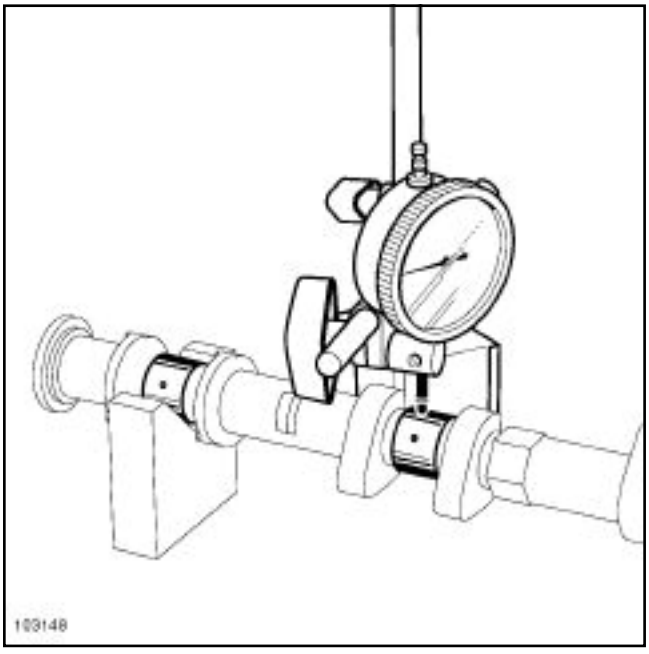

103148

Position camshaft bearings 2 and 4 on the v-blocks.

Position a dial gauge vertically on camshaft bearing 3.

Turn the camshaft by hand.

Measure the radial deviation which should not be in excess of **0.05 mm** .

9 - Checking the valves

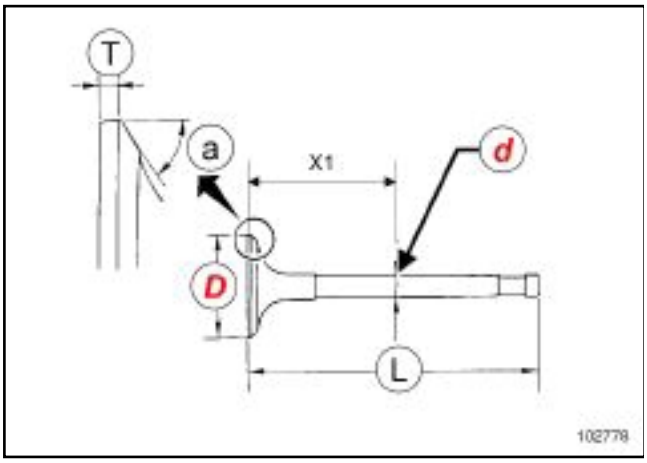

102778

Measure the valve stem diameter (**D**) at (**X1**) :

- Inlet: **5.977 ± 0.008 mm** at (**X1**) = **41 mm** ,
- Exhaust: **5.963 ± 0.008 mm** at (**X1**) = **41 mm** ,

Measure the valve head diameter (**D**) :

- Inlet: **33.5 ± 0.12 mm** ,
- Exhaust: **29 ± 0.12 mm** .

Measure the valve length (**L**) :

- Inlet: **100.95 ± 0.22 mm** ,
- Exhaust: **100.75 ± 0.22 mm** .

Measure the seat angle (**A**) :

- Inlet: **90°** ,
- Exhaust: **90°** .

Thickness (**T**) of the valve head:

- Inlet: **1 mm** ,
- Exhaust: **1 mm** .

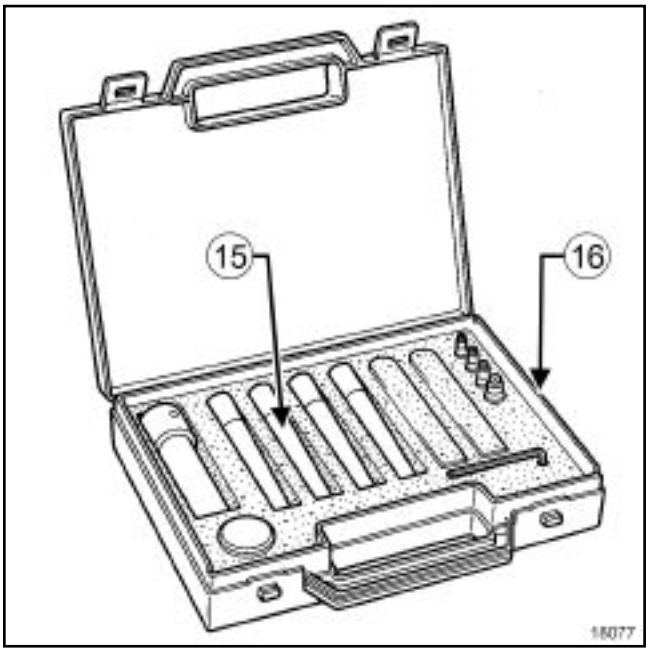

18077

Insert **(without forcing)** the valve in the guide tube (**15**) (with the same diameter as the valve) of the valve stem seal fitting set (**16**) to check:

- that the valve is not twisted,
- that the end of the valve (wedge end) is not strained.

10 - Checking the clearance between the valve and the guide

The clearance between the valve and the guide can be checked in two different ways.

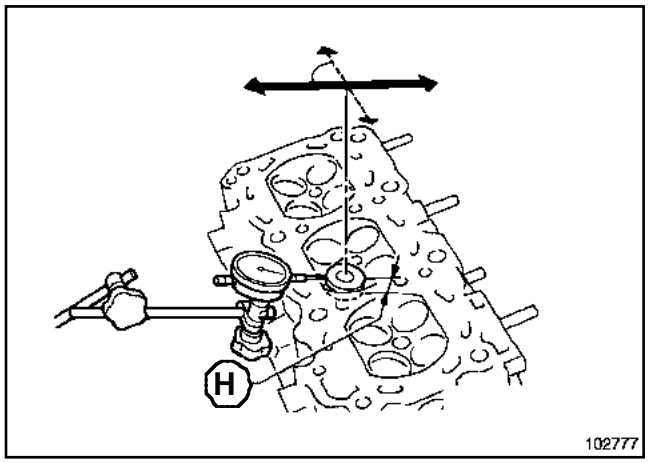

102777

Press the head of the valve to a height (**H**) of **25mm** , then, using a dial gauge, take the measurement in the direction of the arrows, keeping to an angle of

90° to the camshaft shaft. The clearance between the valve and the guide is equal to half the measured value.

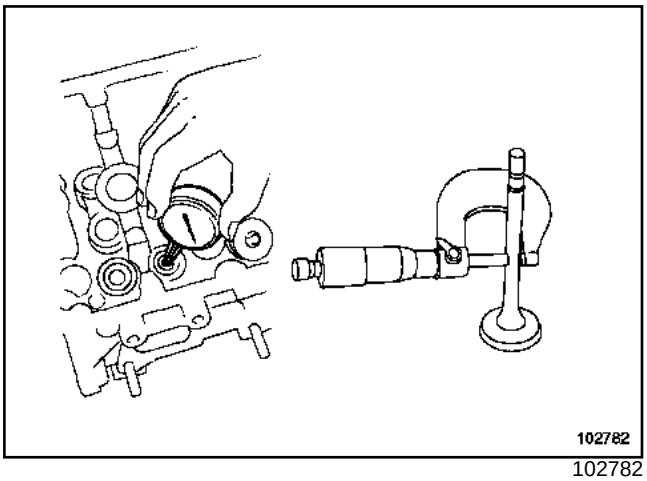

102782

Or using a micrometer measure the external diameter of the valve stem and interior diameter of the valve guide.

Clearance between the valve and the valve guide should be:

- Inlet: **0.02 to 0.05 mm** ,
- Exhaust: **0.03 to 0.063 mm** .

11 - Valve recess

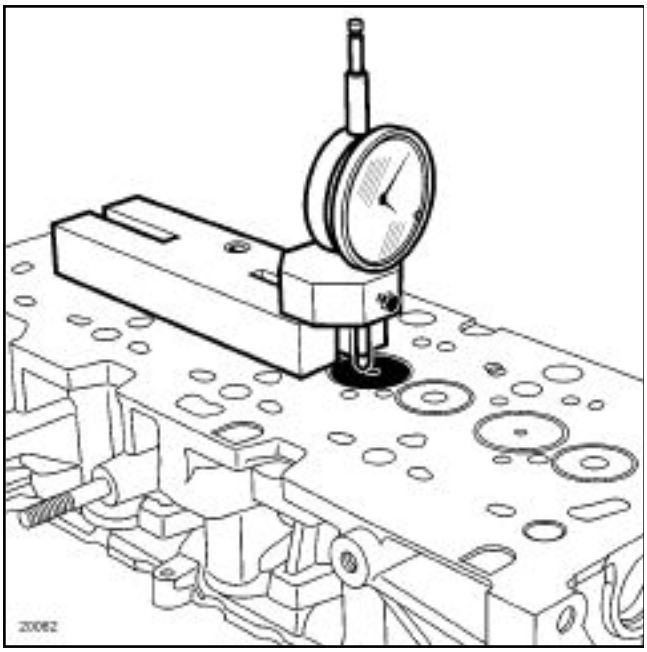

20062

Check the valve recess using **(Mot. 251-01)** , **(Mot. 252-01)** and a dial gauge, which should be **0 ± 0.07 mm** .

12 - Checking the valve springs

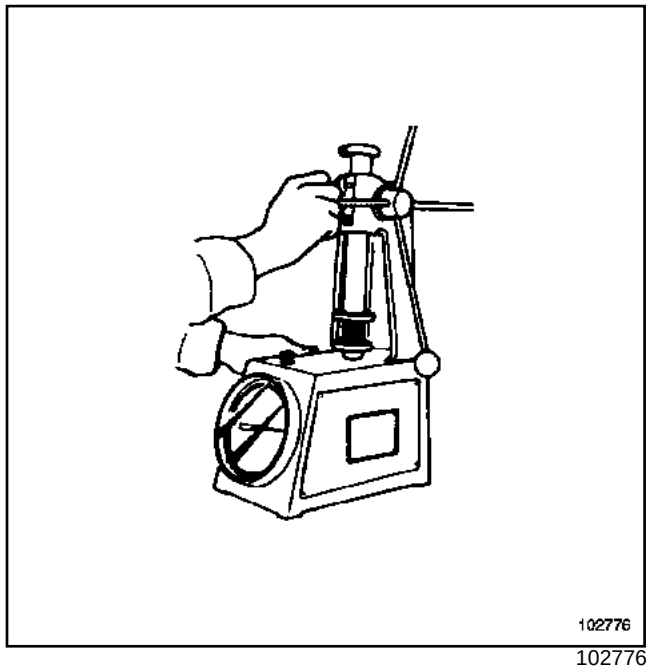

102776

Checking the calibration of the springs.

Length under load:

- **230 ± 12 N** : **33.80 mm** ,
- **500 ± 23 N** : **24.80 mm** .

Length of coiled seals: **23.40 mm** .

Wire diameter: **3.45 mm** .

Internal diameter:

- at the base of the spring **18.80 ± 0.2 mm** ,
- at the top of the spring **14.10 ± 0.2 mm** ,

External diameter:

- at the base of the spring **25.70 ± 0.2 mm** ,
- at the top of the spring **21 ± 0.2 mm** ,

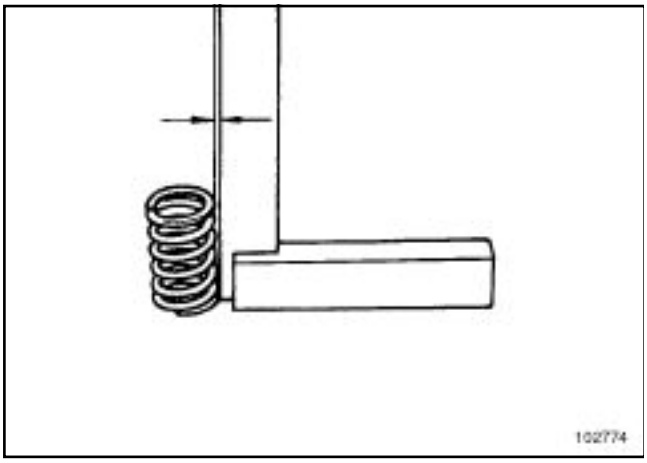

102774

Check that the perpendicularity of the spring is not in excess of **1.2 mm** .

13 - Valve pushrod

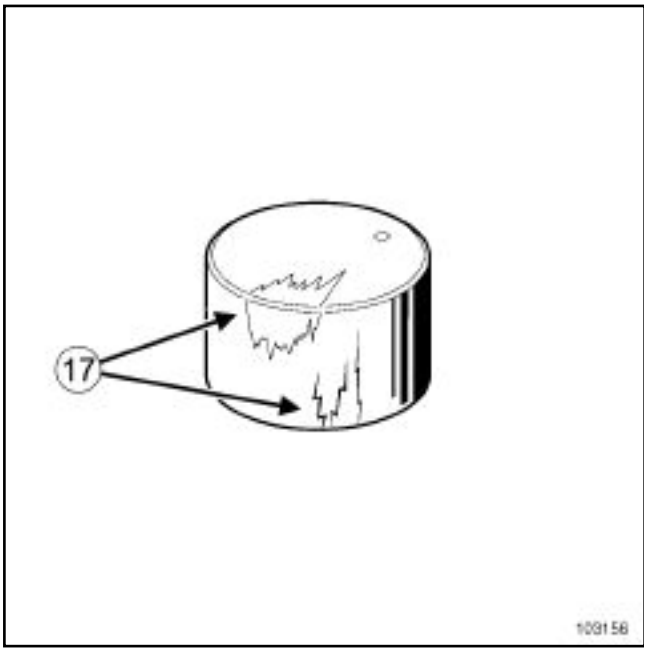

103156

Check the condition of the tappet (worn or coating cracked (**17**)).

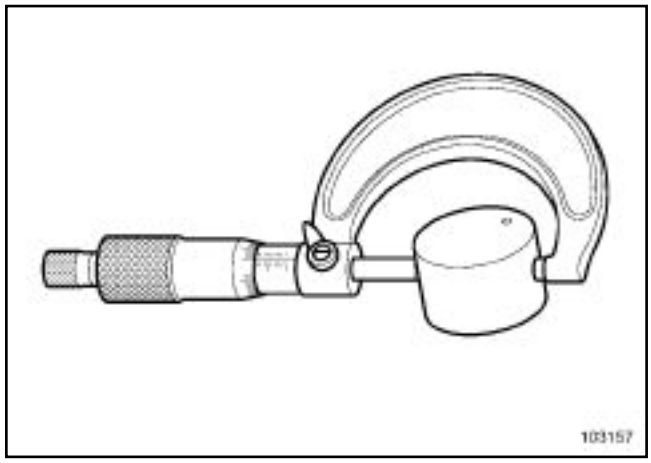

103157

Measure the external diameter of the tappet using a micrometer **34.975 ± 0.01 mm** .

14 - Turbocharger

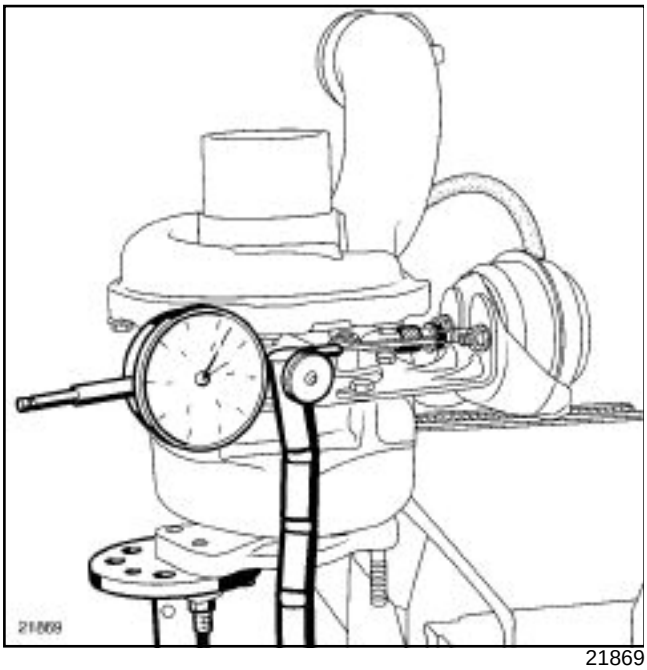

21869

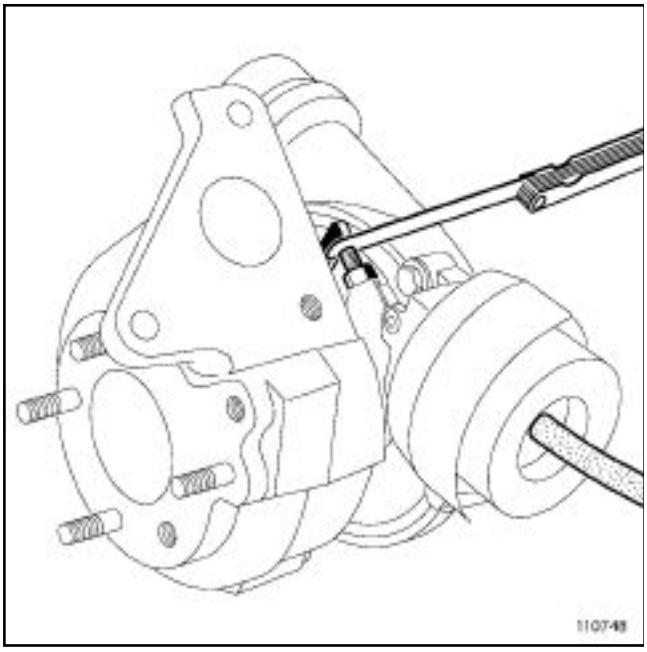

110748

Check the turbocharger pressure valve.

Use a magnetic holder fitted with a dial gauge or a set of shims positioned at the end of the regulating valve stem or between the regulating valve stem and the valve guard (in the axis of the stem).

Progressively apply pressure or a vacuum to the regulation valve using a pressure/vacuum pump (see **10A**, **Engine and lower engine assembly**, **Upper engine: Specifications**, page **10A-28**) .

15 - Heater plugs

Check the resistance of the plug using a multimeter. The resistance should be **0.6 ω** .

K9K, and 260 or 270 or 272 or 700 or 702 or 704 or 706 or 710 or 712 or 722 or 724 or 728 or 729 or 750 or 752 or 760 or 762 or 790

Special tooling required	
Mot. 1511-01	Valve stem seal fitting tool adapter.
Mot. 1335	Pliers for removing valve stem seals.
Mot. 1502	Valve lifting tool for removing valves.
Mot. 799-01	Timing gear wheel immobiliser.
Mot. 856-02	Dial gauge support.
Mot. 252-01	Dial gauge support thrust plate.
Mot. 1632	Tool for fitting PTFE camshaft seal
Mot. 1567	Long nose pliers for EGR duct clips.
Mot. 1746	Offset spanner for tightening high pressure pump pipes.
Mot. 1566	Spanner for removing high pressure pipes.

Tightening torques ▽	
the crankshaft bearing cap mounting bolts	**11 ± 1.1 Nm**
the camshaft pulley mounting stud	**12 ± 2 Nm**
the crankshaft bearing cap mounting bolts	**11 ± 1.1 Nm**
the mounting nut for the camshaft pulley	**30 ± 3 Nm + 86° ± 6°**
exhaust manifold mounting nuts	**26 ± 2.6 Nm**
EGR recirculation unit mounting bolts	**21 ± 2.1 Nm**
the inlet duct mounting bolt	**21 ± 2.1 Nm**

Tightening torques ▽	
the engine lifting eye mounting bolts (timing end)	**M8 to 21 ± 2.1 Nm or M6 to 10 ± 1 Nm**
the cylinder head coolant outlet unit mounting bolts	**11 ± 1.1 Nm**
the vacuum pump bolts	**21 ± 2.1 Nm**
the heater plugs	**15 ± 1.5 Nm**
the engine lifting eye mounting bolts (flywheel end)	**13 ± 1.3 Nm**
the injector bracket bolts	**28 ± 2.8 Nm**
the high-pressure pump mounting bolts	**21 ± 2.1 Nm**
injector rail mounting nuts	**28 ± 2.8 Nm**
the pump-rail high-pressure pipe nuts	**24 ± 2.4 or 38 ± 3.8 Nm**
the rail-injectors high-pressure pipe nuts	**24 ± 2.4 or 38 ± 3.8 Nm**

I - RECOMMENDATIONS FOR REPAIR

IMPORTANT

It is essential to follow the cleanliness guidelines (see **Engine: Precautions during repair**).

Wear latex gloves while using the cleaning product.

K9K, and 260 or 270 or 272 or 700 or 702 or 704 or 706 or 710 or 712 or 722 or 724 or 728 or 729 or 750 or 752 or 760 or 762 or 790

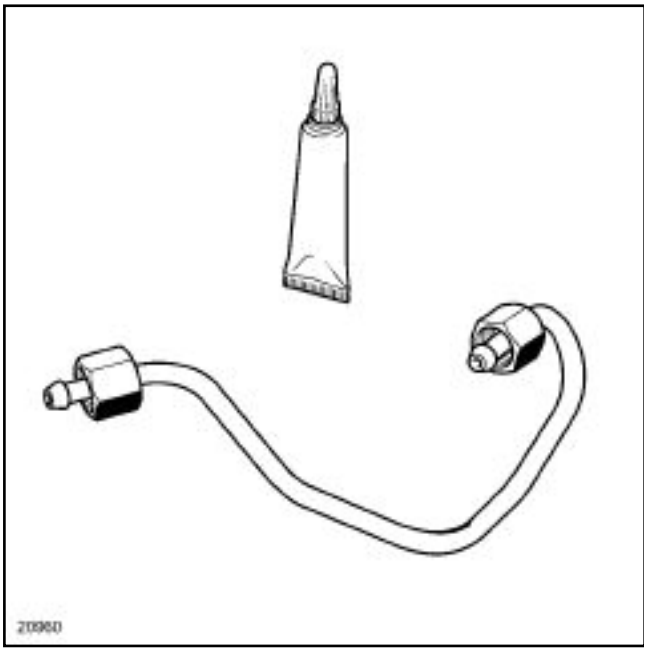

20960

WARNING

Before fitting a new high-pressure pipe, lightly lubricate the nut threads with oil from the applicator provided with the new part.

Be careful not to allow oil into the high-pressure pipe.

Do not lubricate high-pressure pipes supplied without an applicator; these pipes are self-lubricating.

Do not remove the blanking plugs from each component until the last moment.

Do not blast with compressed air once the fuel circuit is open, otherwise impurities may enter the system.

Tighten to torque (**38 ± 3.8 Nm**) the pump-rail and rail-injectors high-pressure pipes, part nos.:

- **77 01 207 025**
- **77 01 207 026**
- **77 01 207 027**
- **77 01 207 028**
- **77 01 207 029**

For the high-pressure pipes with the remaining part nos, tighten to a torque of (**24 ± 2.4 Nm**).

Applying excess sealant could cause it to be squeezed out when parts are tightened. A mixture of sealant and fluid could damage certain components (engine, radiator, etc.)

The sealing surfaces must be clean, dry and free from grease (avoid finger marks).

The gaskets must always be replaced.

The camshaft pulley mounting stud must be replaced if it comes loose as the camshaft pulley is removed.

Do not grease the valve stem seals.

II - PARTS AND CONSUMABLES FOR THE REPAIR

Parts always to be replaced

- Camshaft pulley nut,
- Camshaft seal (timing end),
- The injector heat protection washers,
- High-pressure pipes,
- The vacuum pump seal,

K9K, and 260 or 270 or 272 or 700 or 702 or 704 or 706 or 710 or 712 or 722 or 724 or 728 or 729 or 750 or 752 or 760 or 762 or 790

- The cylinder head coolant outlet unit seal,
- The exhaust manifold gasket,
- The inlet tube gasket,
- The exhaust gas recirculation pipe,
- The EGR solenoid valve seal,
- Valve stem seals

Consumables

- Loctite 518, part no. **77 01 421 162** ,
- Degreasing agent, part no. **77 11 224 559** .

III - EQUIPMENT REQUIRED

- Latex protective gloves,
- high-pressure pipes valve wrench,
- Tweezers,
- Wrench for the high-pressure pipes,
- Crow foot wrench,
- Wrench with hinge for heater plugs,
- Roller-type stud removal tool
- The valve stem seal fitting kit,
- Dial gauge,
- Magnetic holder,
- Torque/angle wrench,
- Torque wrench
- Cylinder head bolt tightening gauge (angular measuring type).

K9K, and 260 or 270 or 272 or 700 or 702 or 704 or 706 or 710 or 712 or 722 or 724 or 728 or 729 or 750 or 752 or 760 or 762 or 790

IV - REASSEMBLING THE CYLINDER HEAD

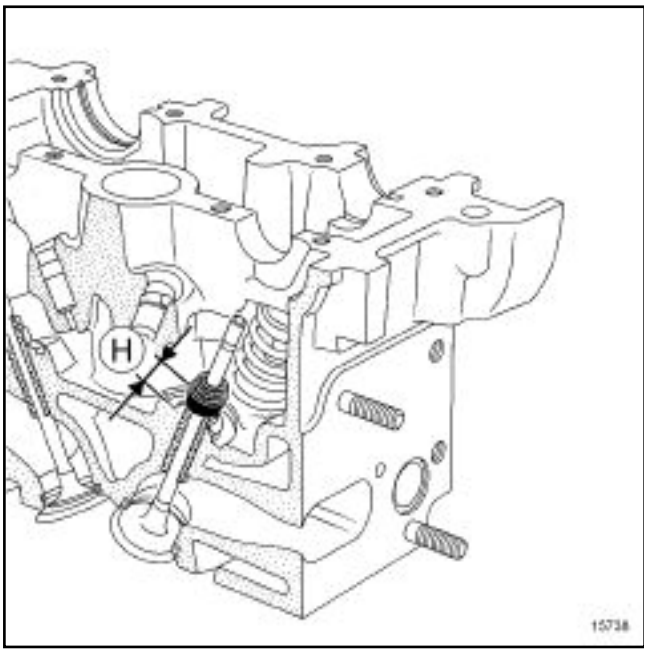

15738

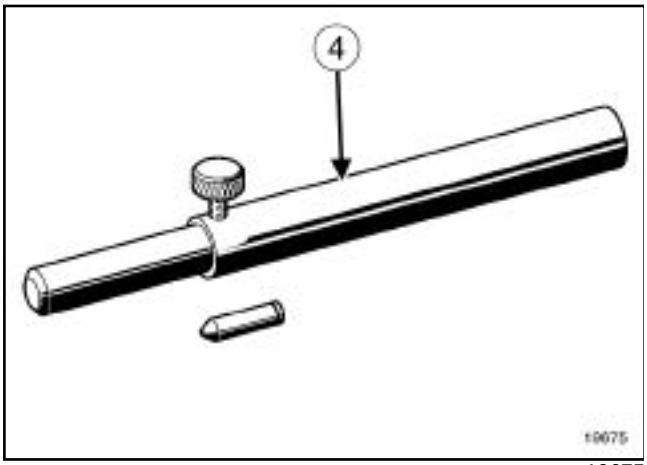

19675

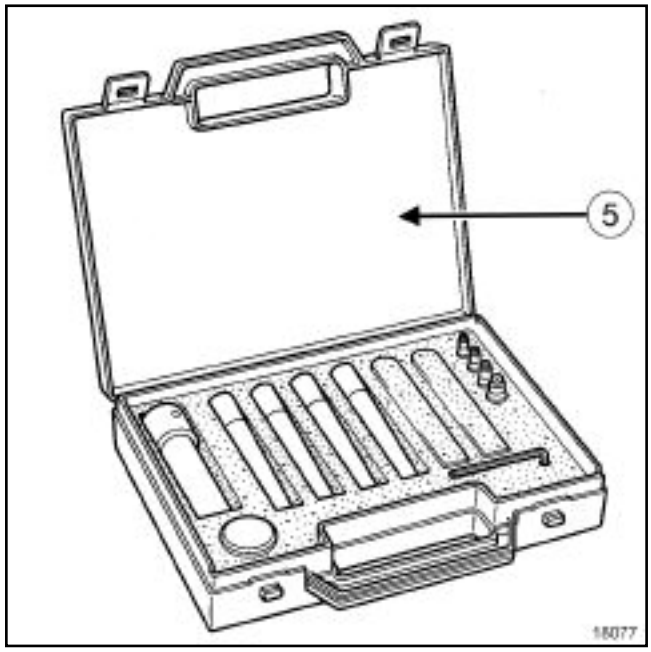

18077

Note:

Before removing the valve stem seals, it is essential to note the position *(H)* of the old seals on the inlet side, then the exhaust side as the fitting dimension of the seals may be different between the inlet and the exhaust.

Fit a valve.

Compare dimension (**H**) of an old seal with the cylinder head using the **(Mot. 1511-01)** (**4**) or the valve stem seal fitting kit (**5**) .

Note:

The internal diameter of the pushrod *(1)* should be identical to that of the valve; In addition, the bottom of the pushrod must be snug against the metal upper section of the valve stem seal.

K9K, and 260 or 270 or 272 or 700 or 702 or 704 or 706 or 710 or 712 or 722 or 724 or 728 or 729 or 750 or 752 or 760 or 762 or 790

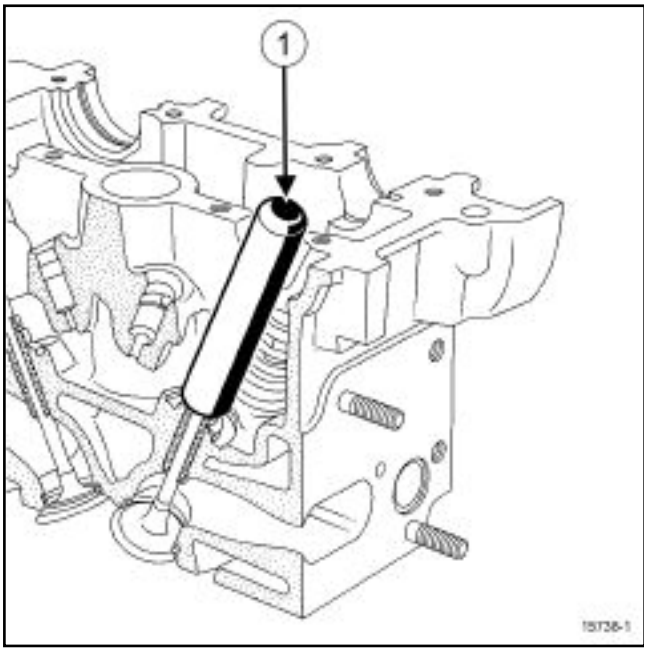

15738-1

Place the pushrod (**1**) over the valve stem seal.

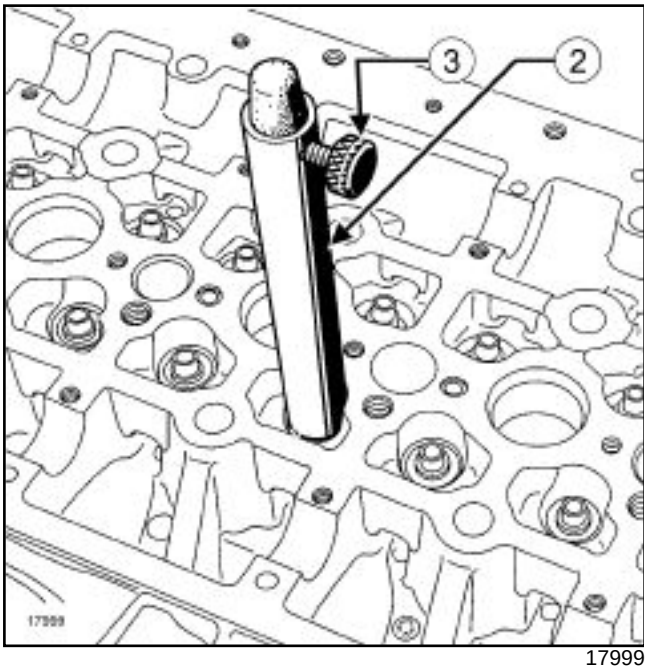

17999

Fit the guide tube (**2**) above the pushrod until it comes into contact with the cylinder head.

Lock the pushrod with the wheel (**3**) .

Remove the guide tube-pushrod assembly, being careful not to loosen the wheel.

Remove:

- the valve,
- the valve stem seals (inlet end then exhaust end) using the **(Mot. 1335)** .

Apply engine oil to the inside of the valve guide.

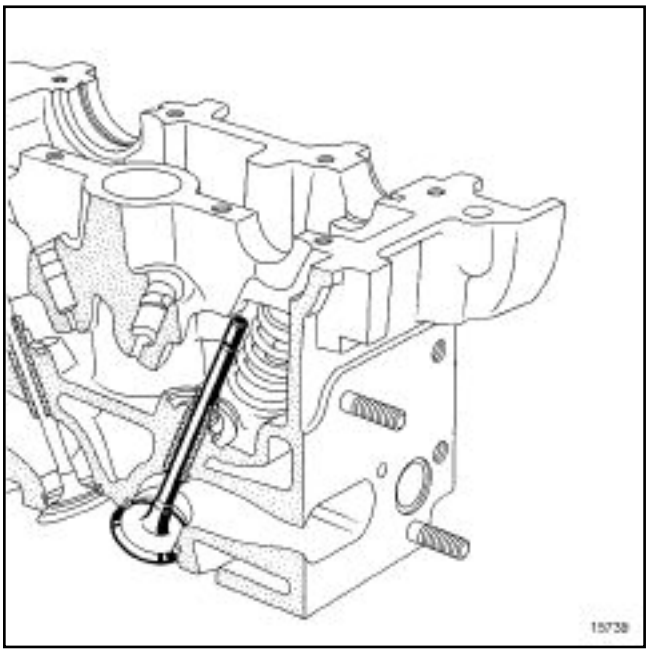

15739

Place the valve in the cylinder head.

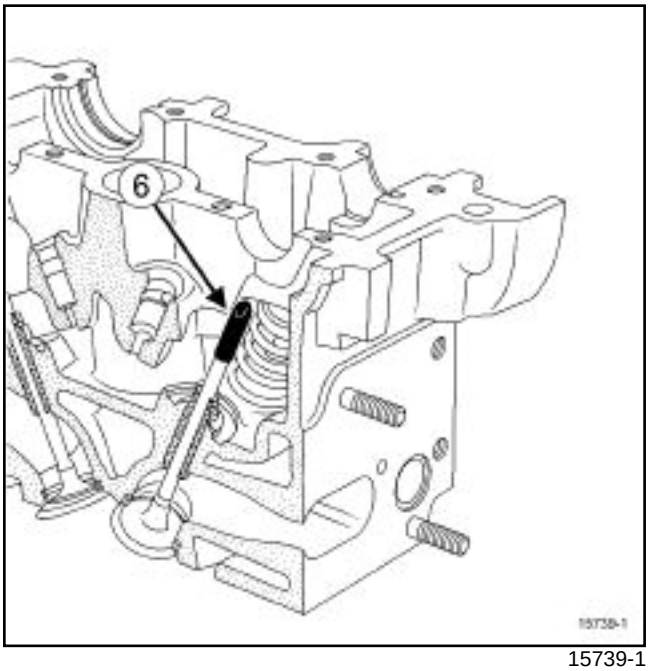

15739-1

Place the valve insert (**6**) on the valve stem (the diameter of the valve insert should be identical to that of the valve stem).

K9K, and 260 or 270 or 272 or 700 or 702 or 704 or 706 or 710 or 712 or 722 or 724 or 728 or 729 or 750 or 752 or 760 or 762 or 790

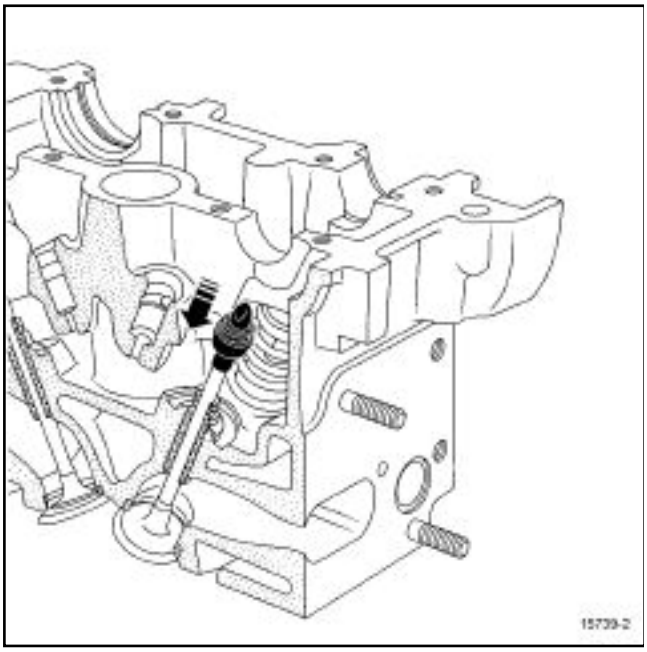

15739-2

Keep the valve pressed against its seat.

Mount the valve stem seal (not lubricated) over the valve insert.

Push the valve stem seal until it goes past the valve insert.

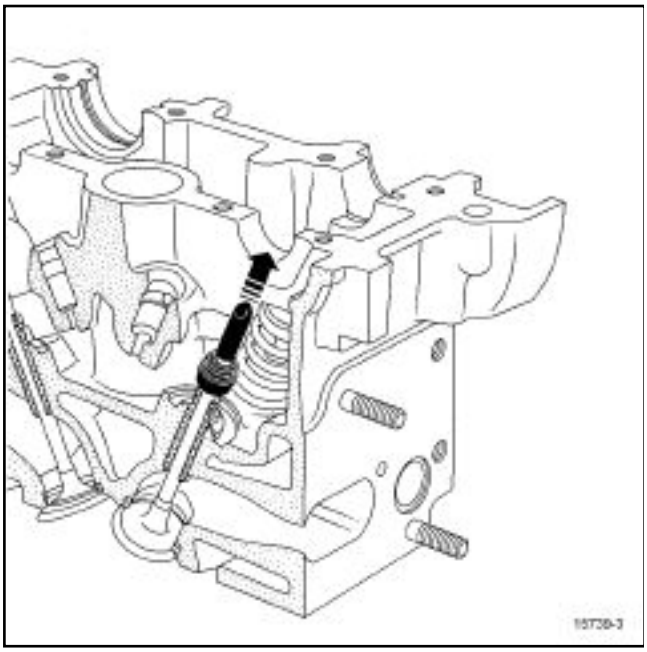

15739-3

Remove the valve insert.

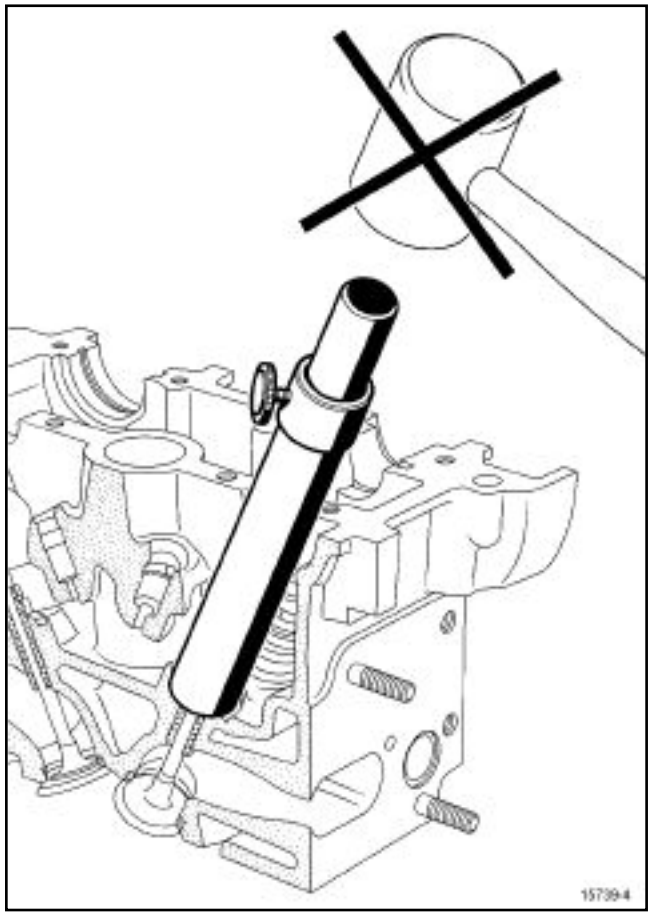

15739-4

Fit the guide tube-pushrod assembly on the valve stem seal.

Push home the valve stem seal by gently striking the pushrod with the palm of the hand, until the guide tube makes contact with the cylinder head.

Repeat the preceding operations on all the inlet and exhaust valves.

K9K, and 260 or 270 or 272 or 700 or 702 or 704 or 706 or 710 or 712 or 722 or 724 or 728 or 729 or 750 or 752 or 760 or 762 or 790

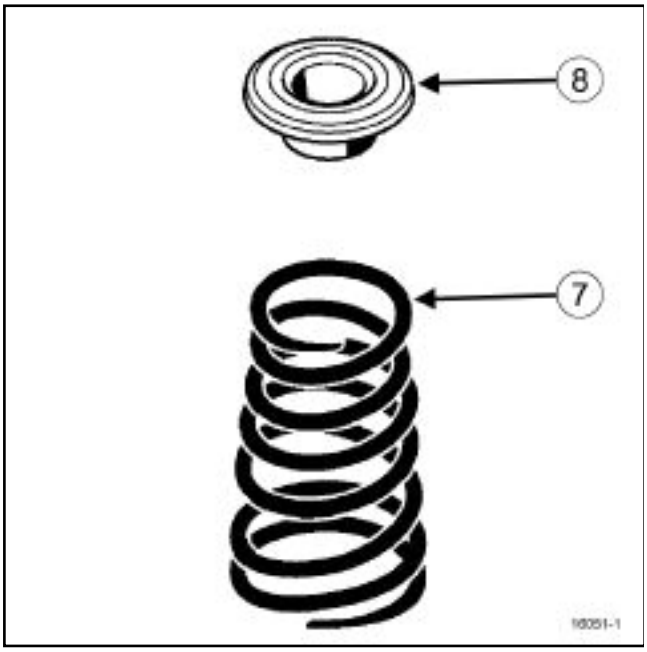

16051-1

Refit:

- the valve springs, positioning the conical part (**7**) of the spring at the top,
- the valve spring upper cups (**8**) ,

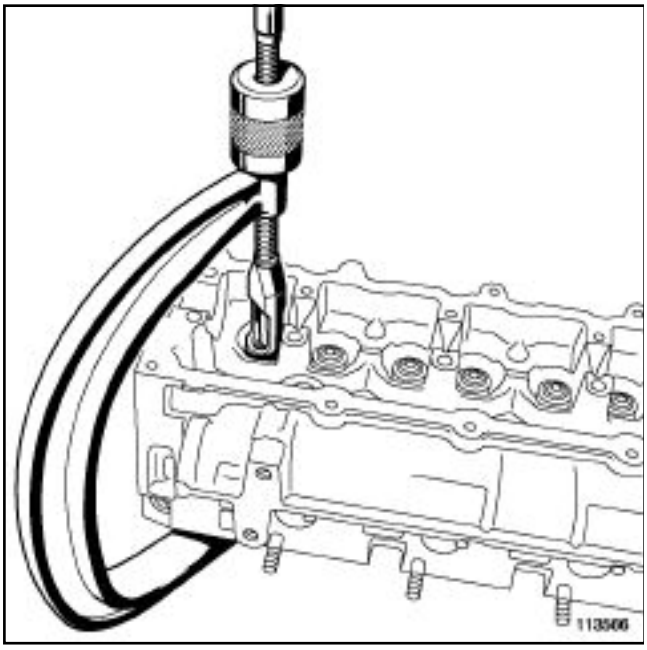

113566

Compress the valve springs using the **(Mot. 1502)** or a valve wrench.

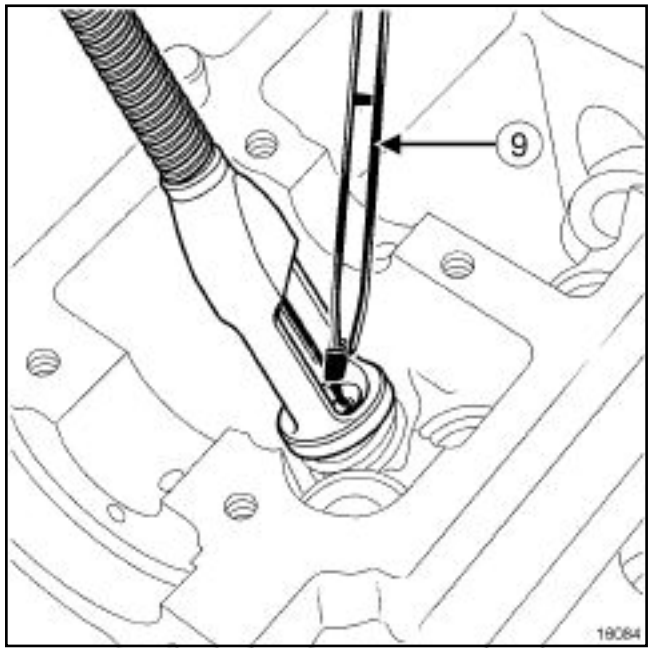

16084

Refit the cotters using tweezers.

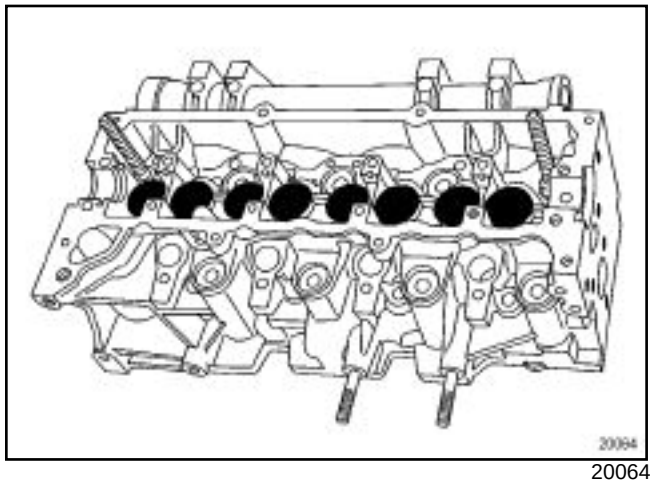

20064

Refit the pushrods observing their original position.

Oil the valve pushrods and the camshaft bearings with engine oil.

K9K, and 260 or 270 or 272 or 700 or 702 or 704 or 706 or 710 or 712 or 722 or 724 or 728 or 729 or 750 or 752 or 760 or 762 or 790

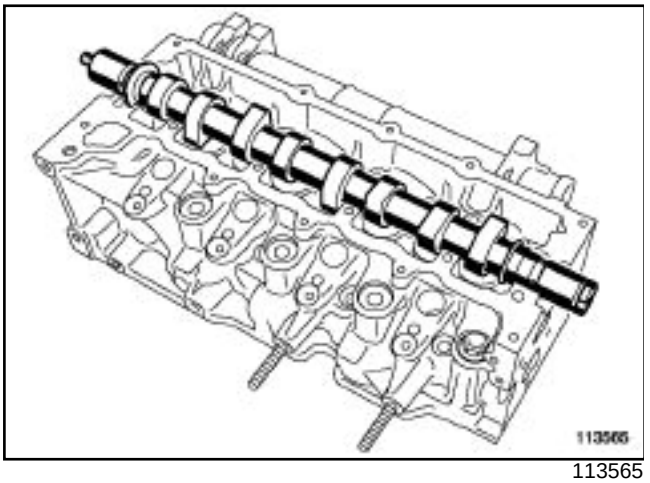

113565

Refit the camshaft.

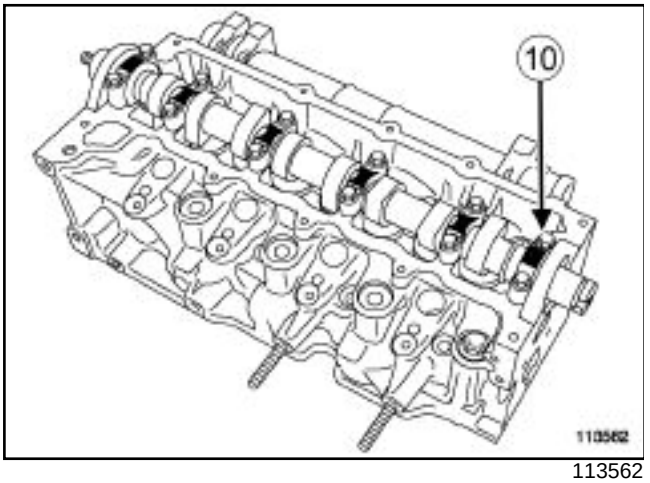

113562

Refit the camshaft bearing caps (observing their original positions, bearing No. 1 (**10**) engine flywheel end).

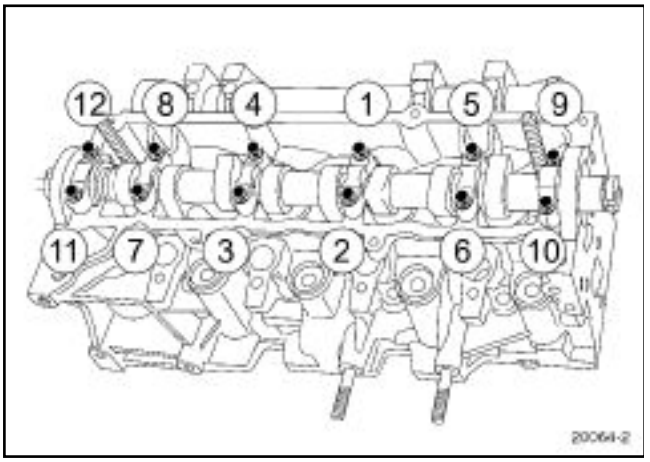

20064-2

Tighten to torque and in order **the crankshaft bearing cap mounting bolts (11 ± 1.1 Nm)** .

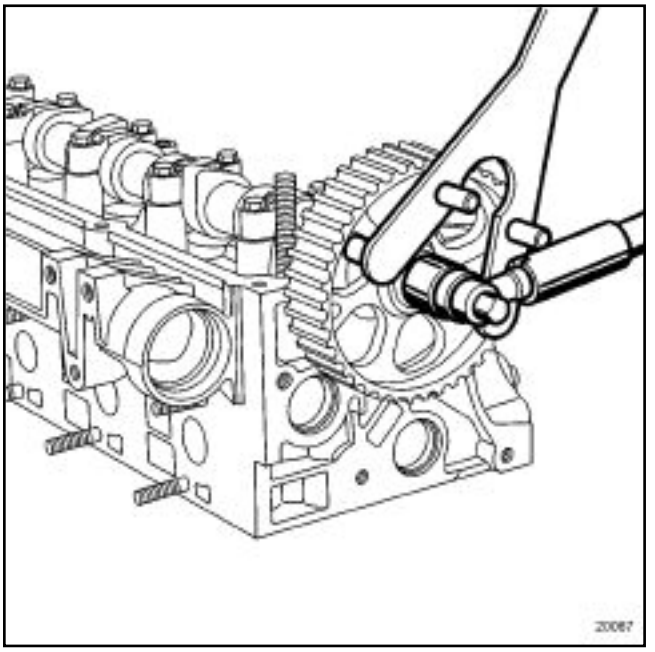

20067

Refit:

- the camshaft pulley,

- the old exhaust camshaft pulley mounting nut.

Tighten to torque **the mounting nut for the camshaft pulley (15 ± 1.5 Nm)** , blocking the camshaft pulley with the **(Mot. 799-01)** .

Check and adjust the valve clearances following the procedure below.

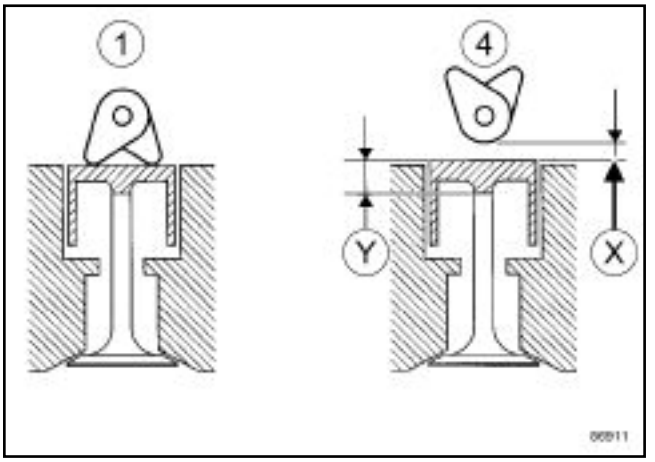

86911

Position the cylinder valves (**1**) in the end of exhaust stroke, beginning of inlet stroke position.

Measure the valve clearance (**X**) of the cylinder (**4**) using a set of shims.

- inlet valve clearance **0.20 mm** ,

- exhaust valve clearance **0.40 mm** ,

K9K, and 260 or 270 or 272 or 700 or 702 or 704 or 706 or 710 or 712 or 722 or 724 or 728 or 729 or 750 or 752 or 760 or 762 or 790

Note the clearance values.

Repeat the above operations on the other cylinders:

- position cylinder No. **3** at an angle and measure the clearance of cylinder No. **2** ,
- position cylinder No. **4** at an angle and measure the clearance of cylinder No. **1** ,
- position cylinder No. **2** at an angle and measure the clearance of cylinder No. **3** ,

Compare the values noted with the specified values.

Remove:

- the nut from the camshaft pulley,
- the camshaft pulley,
- the camshaft bearing caps,
- the camshaft,
- the pushrod(s) which are outside of permitted tolerance values, noting their original position.

Undertake the following installation to determine the class of thickness of the valve pushrod.

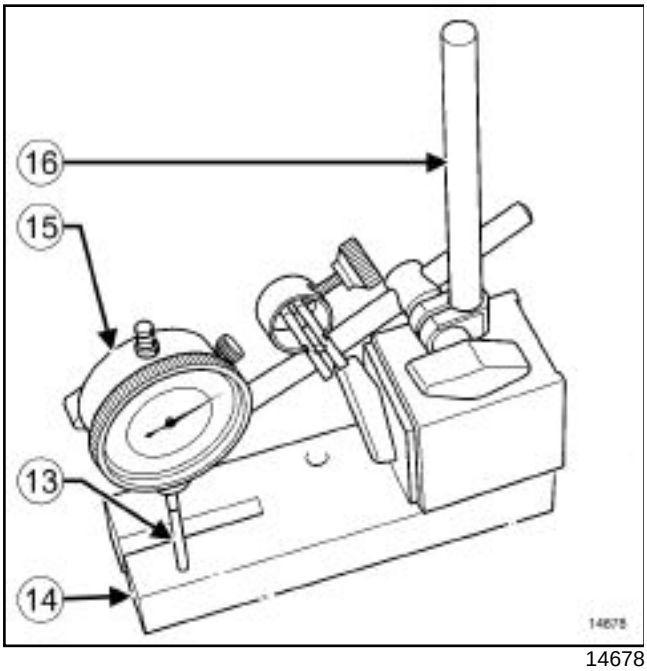

14678

Screw the extension piece (**13**) of the **(Mot. 856-02)** to a dial gauge (**15**) .

Fix the dial gauge (**15**) to a magnetic holder (**16**) .

Mount the dial gauge-magnetic holder assembly on the plate (**14**) of the tool **(Mot. 252-01)** .

Calibrate the dial gauge.

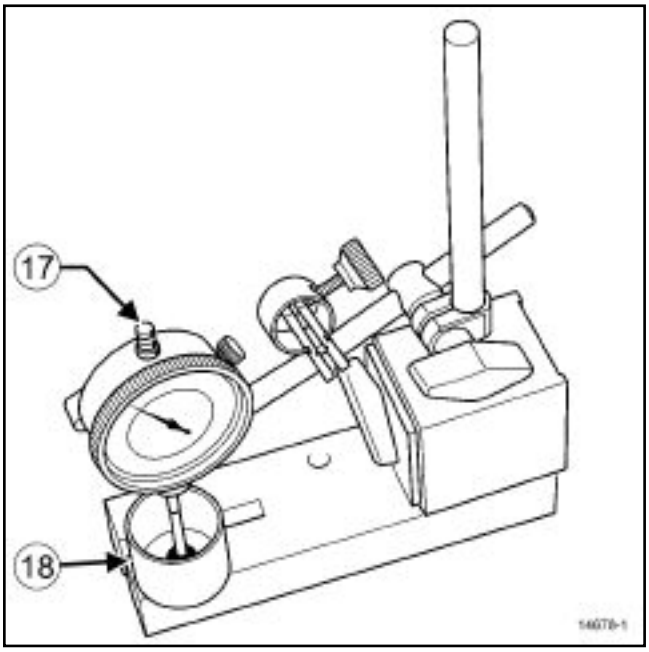

14678-1

Lift the top piece (**17**) of the dial gauge (without changing the position of the dial gauge-magnetic holder assembly).

Mount the valve pushrod (**18**) to be measured on the plate of the **(Mot. 252-01)** .

Take the measurement ***(Y)*** .

Repeat the preceding operations for the other valve pushrods to be measured.

Refit the new valve pushrod(s) in the cylinder head.

Check that the camshaft pulley mounting stud has not come loose. If so, the stud must be replaced following the procedure described below.

Place the camshaft in a vice fitted with a clamping jaw.

K9K, and 260 or 270 or 272 or 700 or 702 or 704 or 706 or 710 or 712 or 722 or 724 or 728 or 729 or 750 or 752 or 760 or 762 or 790

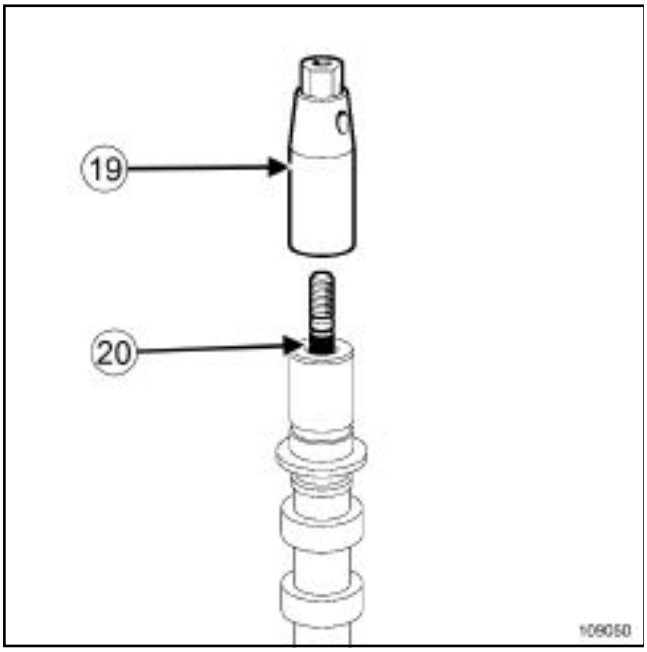

109050

Remove the piston rings using a roller-type stud removal tool (**19**) .

Clean the threaded hole of the camshaft carefully to prevent foreign bodies from entering the latter.

Fit the new stud on the camshaft (precoated section ***(20)*** on the camshaft side).

Tighten to torque **the camshaft pulley mounting stud (12 ± 2 Nm)** using a roller-type stud removal tool ***(19)*** .

Oil the top of the valve pushrods and the camshaft bearings with engine oil.

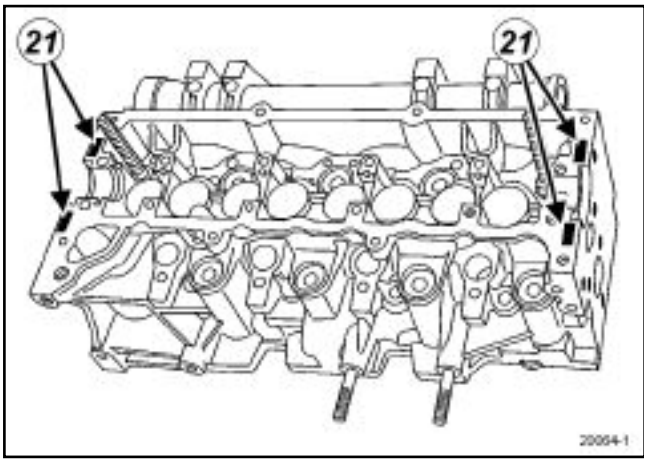

20064-1

Degrease the surfaces of the camshaft bearing gaskets nos. 1 and 6 (**21**) using degreaser.

Apply four beads of **LOCTITE 518** of a width of **1 mm** to camshaft bearings nos. 1 and 6 (**21**) .

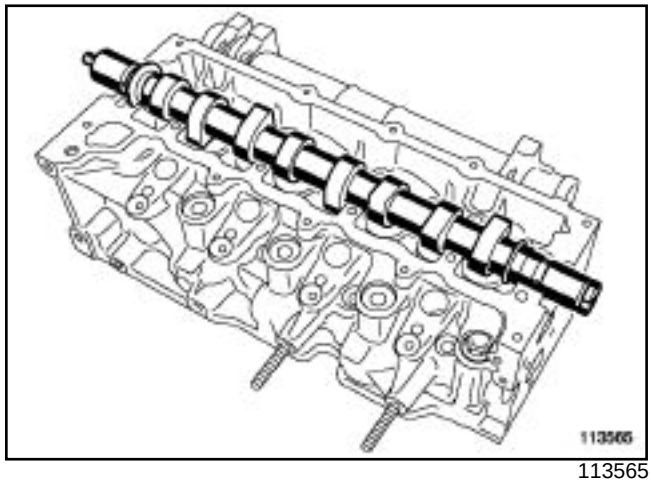

113565

Refit the camshaft.

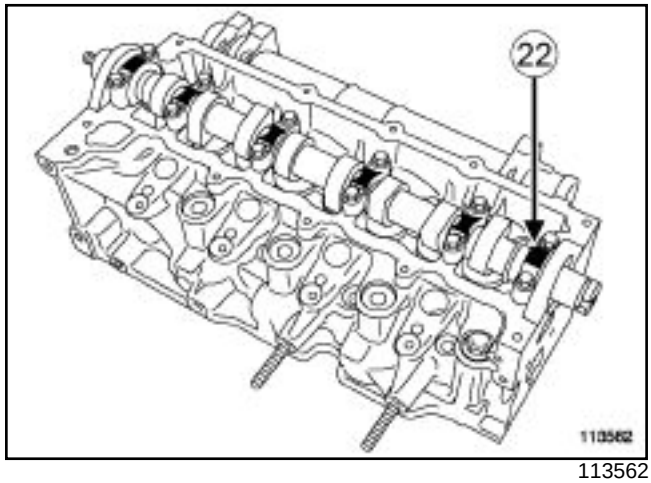

113562

Refit the camshaft bearing caps (observing their original positions, bearing No. 1 (**22**) engine flywheel end).

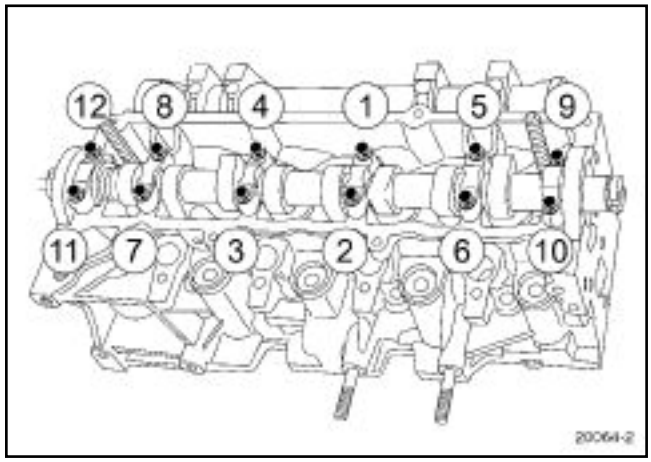

20064-2

Tighten to torque and in order **the crankshaft bearing cap mounting bolts (11 ± 1.1 Nm)** .

K9K, and 260 or 270 or 272 or 700 or 702 or 704 or 706 or 710 or 712 or 722 or 724 or 728 or 729 or 750 or 752 or 760 or 762 or 790

Apply degreaser to:

- the end of the camshaft at the timing end,
- the housing on the cylinder head of the camshaft gasket.

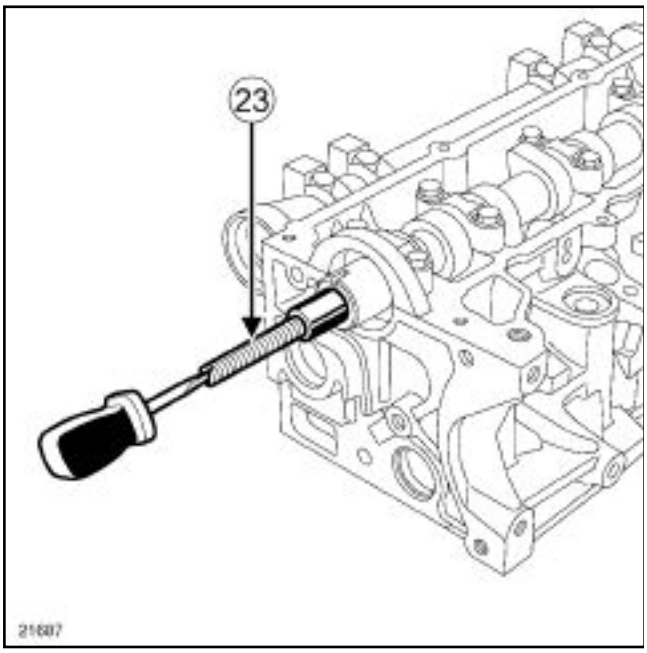

21687

Screw the shoulder stud (**23**) of the **(Mot. 1632)** onto the mounting stud of the camshaft pulley.

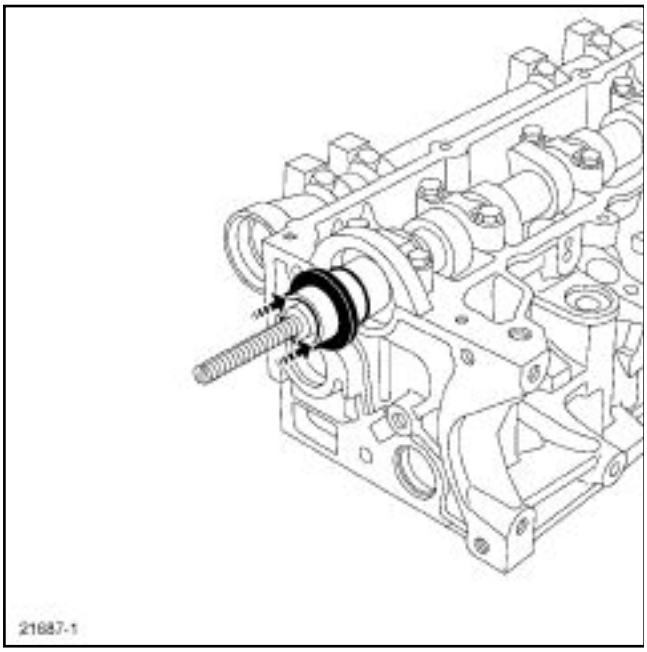

21687-1

Refit the camshaft gasket.

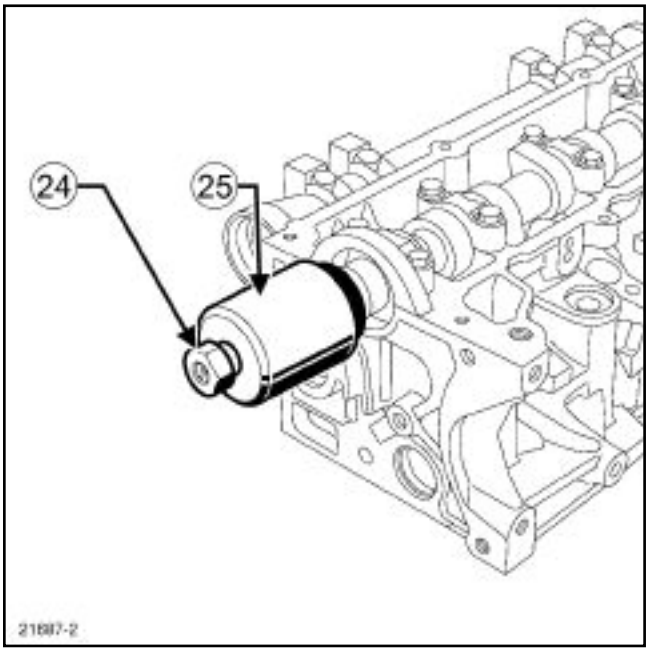

21687-2

Position the cover (**25**) and collar nut (**24**) of the **(Mot. 1632)** .

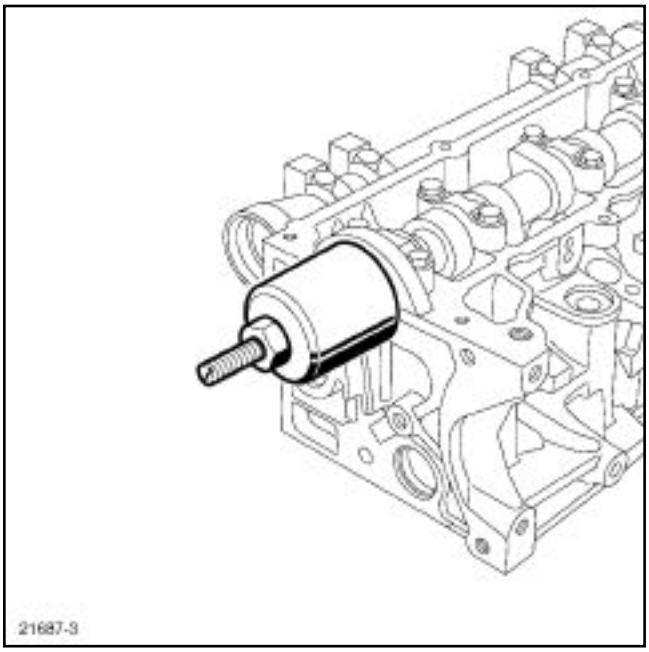

21687-3

Screw on the collar nut until the cover touches the cylinder head.

Remove:

- the collar nut,
- the cap,
- the shoulder stud.

K9K, and 260 or 270 or 272 or 700 or 702 or 704 or 706 or 710 or 712 or 722 or 724 or 728 or 729 or 750 or 752 or 760 or 762 or 790

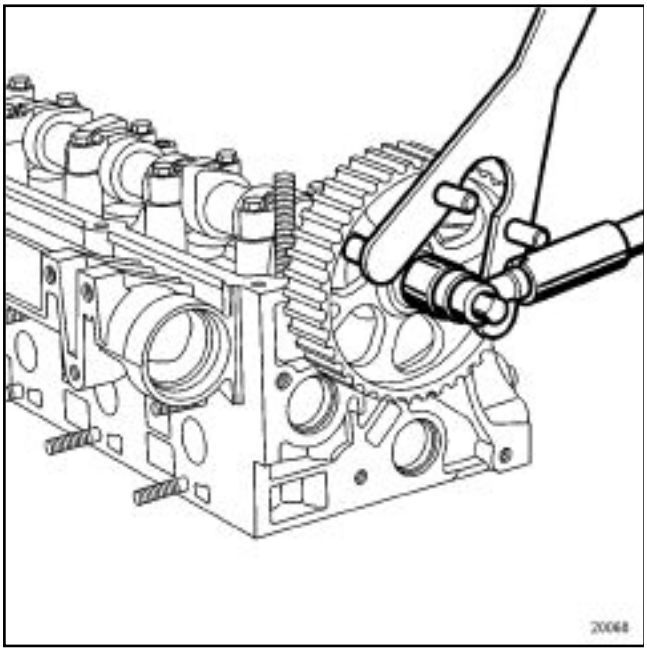

20068

Refit:

- the camshaft pulley,
- the new camshaft pulley mounting nut.

Tighten to torque and angle **the mounting nut for the camshaft pulley (30 ± 3 Nm + 86° ± 6°)** , blocking the camshaft pulley with the **(Mot. 799-01)** .

Using degreaser, degrease the surfaces of the exhaust manifold and cylinder head gaskets at the exhaust end.

Refit:

- a new turbocharger-exhaust manifold gasket,
- the exhaust manifold,
- the exhaust manifold mounting nuts.

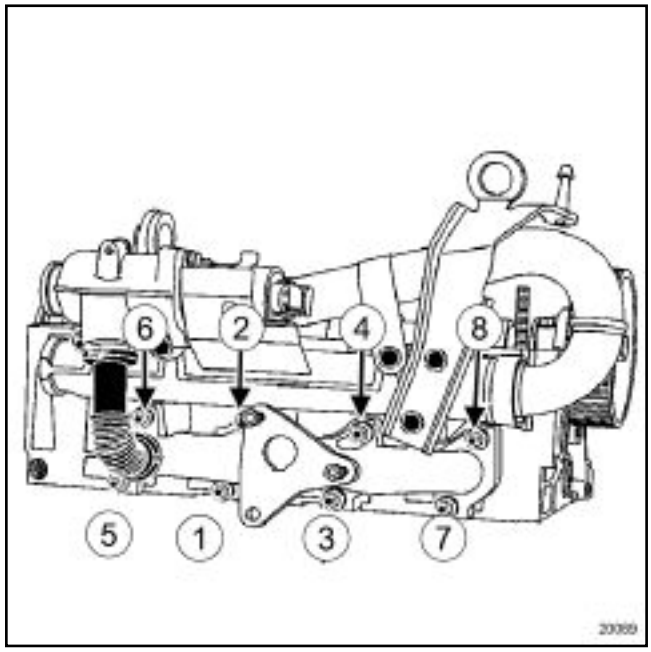

20069

Tighten to torque and in order the **exhaust manifold mounting nuts (26 ± 2.6 Nm)** .

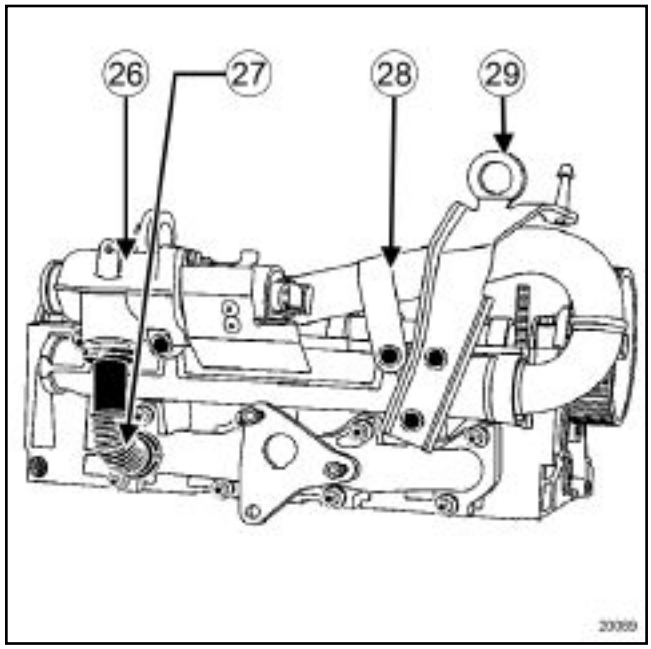

20069

Refit:

- the EGR recirculation unit (**26**) without tightening the bolts,
- the exhaust gas recirculation pipe (**27**) ,
- the mounting clips of the exhaust gas recirculation pipe.

Tighten the clips of the exhaust gas recirculation pipe using the **(Mot. 1567)** .

K9K, and 260 or 270 or 272 or 700 or 702 or 704 or 706 or 710 or 712 or 722 or 724 or 728 or 729 or 750 or 752 or 760 or 762 or 790

Tighten to torque the **EGR recirculation unit mounting bolts (21 ± 2.1 Nm)** .

Refit:

- a new seal on the inlet duct,
- the inlet duct ***(28)*** ,
- the engine lifting eye ***(29)*** (timing end).

Tighten to torque:

- **the inlet duct mounting bolt (21 ± 2.1 Nm)** ,
- **the engine lifting eye mounting bolts (timing end) (M8 to 21 ± 2.1 Nm or M6 to 10 ± 1 Nm)** .

Using degreaser, degrease the seal surfaces where the vacuum pump enters and at the cylinder head coolant outlet.

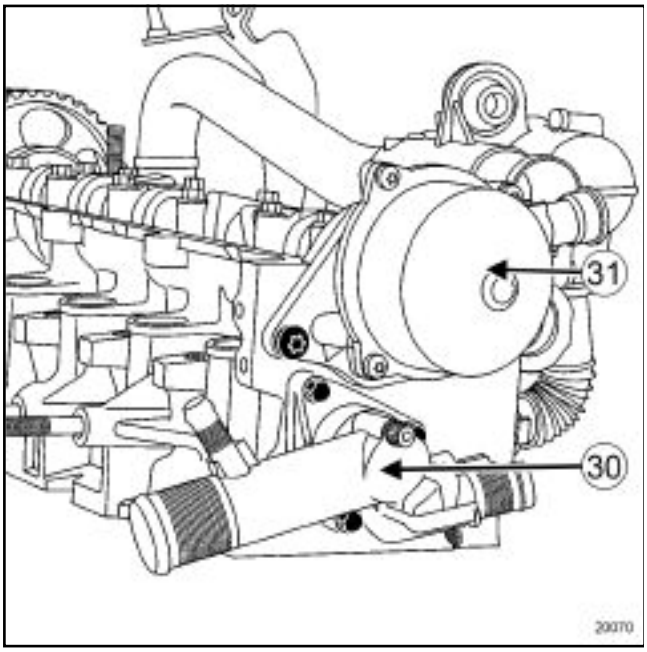

20070

Refit:

- the cylinder head coolant outlet unit (**30**) fitted with a new seal,
- the vacuum pump (**31**) fitted with a new seal.

Tighten to torque:

- **the cylinder head coolant outlet unit mounting bolts (11 ± 1.1 Nm)** ,
- **the vacuum pump bolts (21 ± 2.1 Nm)** .

Refit the heater plugs.

Tighten to torque **the heater plugs (15 ± 1.5 Nm)** using a wrench with hinge.

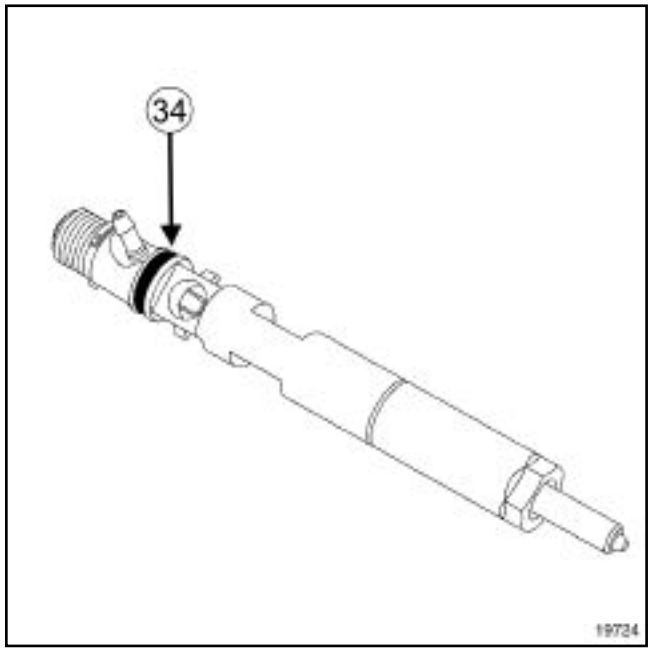

19724

Note:

If one or more injectors are replaced, note the alphanumeric code (C2I) (**34**) and the number of the cylinder on which it is fitted.

K9K, and 260 or 270 or 272 or 700 or 702 or 704 or 706 or 710 or 712 or 722 or 724 or 728 or 729 or 750 or 752 or 760 or 762 or 790

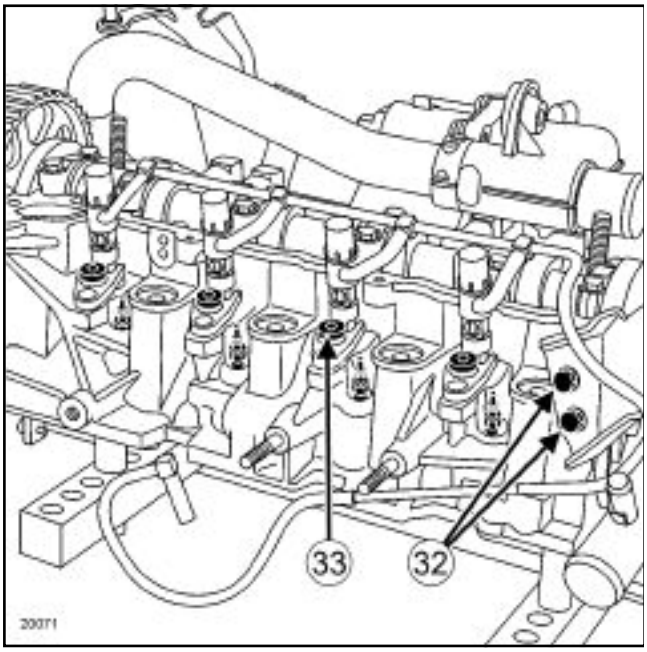

20071

Refit:

- engine lifting eye (flywheel end),
- the new heat protection washers,
- the injectors (observing their positions),
- the injector brackets.

Tighten to torque:

- **the engine lifting eye mounting bolts (flywheel end) (13 ± 1.3 Nm)** (**32**) ,
- **the injector bracket bolts (28 ± 2.8 Nm)** (**33**) .

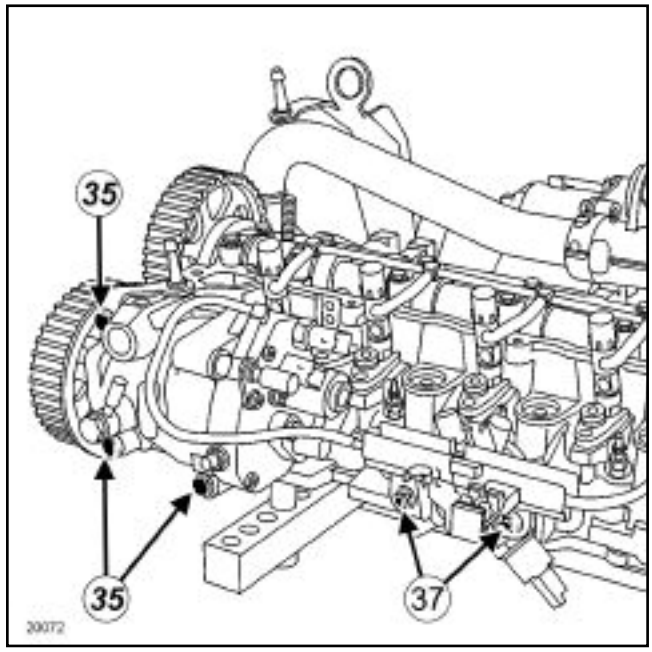

20072

Refit:

- the high-pressure pump,
- the injector rail **(without tightening the nuts)** .

Tighten to torque **the high-pressure pump mounting bolts (21 ± 2.1 Nm)** .

Note:

Do not lubricate high-pressure pipes **supplied without an applicator; these pipes are self-lubricating.**

K9K, and 260 or 270 or 272 or 700 or 702 or 704 or 706 or 710 or 712 or 722 or 724 or 728 or 729 or 750 or 752 or 760 or 762 or 790

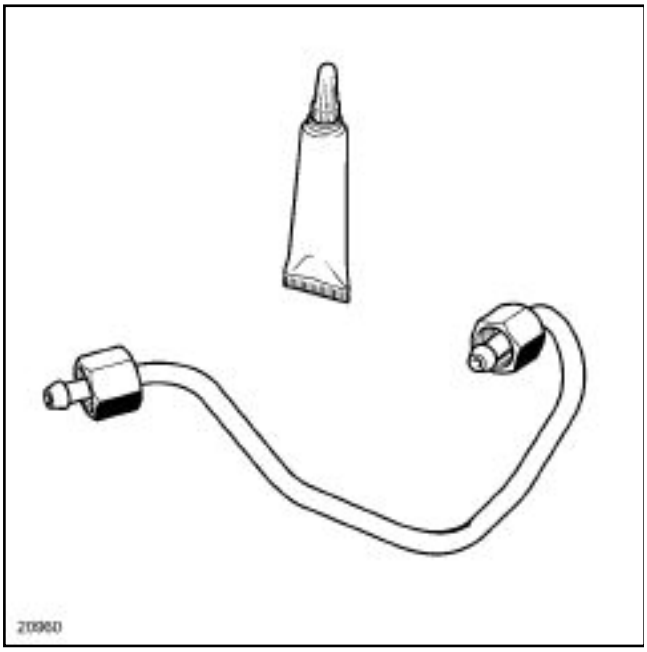

20960

Lightly lubricate the nut threads with oil from the applicator supplied with the new part, taking care not to insert it in the pipe.

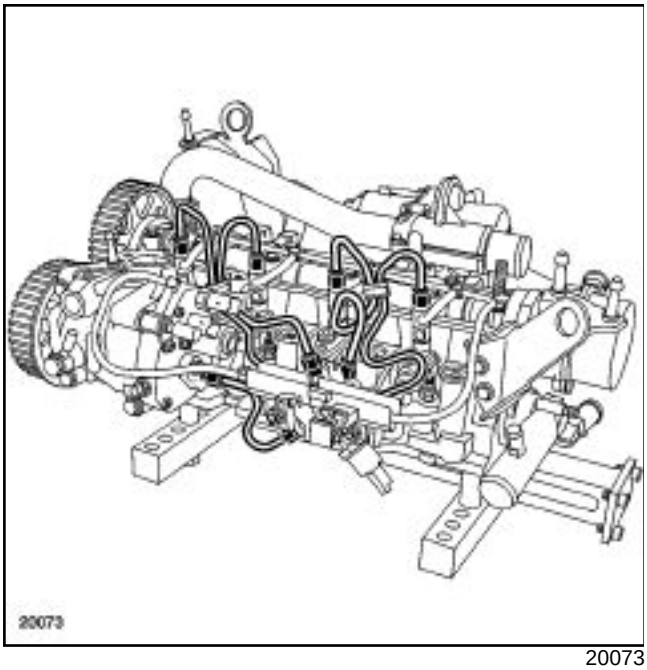

20073

Insert the high-pressure pipe olive in the injector high-pressure inlet taper.

Insert the high-pressure pipe olive in the rail high-pressure outlet taper.

Finger tighten the high-pressure pipe nuts, starting with the one located on the injector end.

Lightly tighten the nuts of the high-pressure pipes.

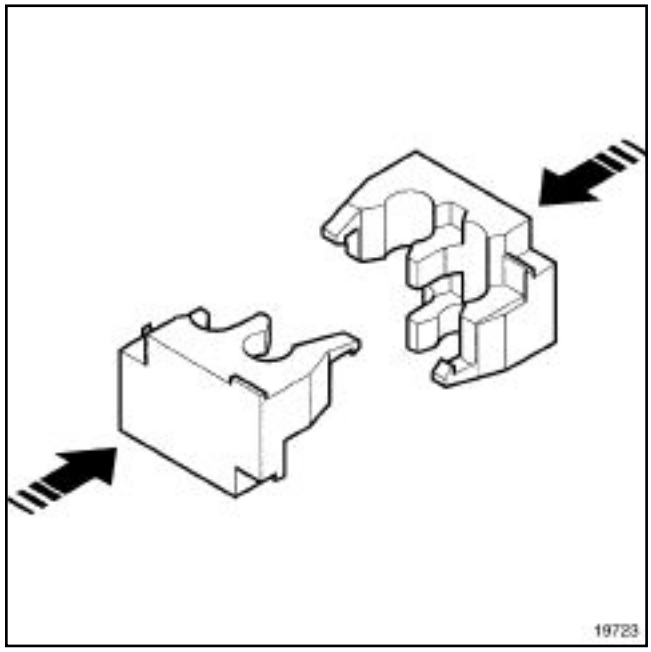

19723

Fit the new clip provided with the new high-pressure pipe.

Tighten to torque the **injector rail mounting nuts (28 ± 2.8 Nm)** .

Note:

Completely tighten one high-pressure pipe before moving to the next one.

Tighten to torque and in order (according to the part no. of the pipe) **the pump-rail high-pressure pipe nuts (24 ± 2.4 or 38 ± 3.8 Nm)** :

- high-pressure pump side, using the **(Mot. 1746)** or a crow foot wrench,
- injector rail side, using the **(Mot. 1746)** or a crow foot wrench,

Tighten to torque and in order (according to the part no. of the pipe) **the rail-injectors high-pressure pipe nuts (24 ± 2.4 or 38 ± 3.8 Nm)** :

- injector side using the **(Mot. 1566)** or with a wrench for high-pressure pipes.
- injector rail side, using the **(Mot. 1566)** or a crow foot wrench,

K9K, and 274 or 276 or 714 or 716 or 718 or 766 or 768

Special tooling required	
Mot. 1511-01	Valve stem seal fitting tool adapter.
Mot. 1335	Pliers for removing valve stem seals.
Mot. 1502	Valve lifting tool for removing valves.
Mot. 799-01	Timing gear wheel immobiliser.
Mot. 856-02	Dial gauge support.
Mot. 252-01	Dial gauge support thrust plate.
Mot. 1632	Tool for fitting PTFE camshaft seal
Mot. 1567	Long nose pliers for EGR duct clips.
Mot. 1746	Offset spanner for tightening high pressure pump pipes.
Mot. 1566	Spanner for removing high pressure pipes.

Tightening torques ▽	
the crankshaft bearing cap mounting bolts	**11 ± 1.1 Nm**
the camshaft pulley mounting stud	**12 ± 2 Nm**
the crankshaft bearing cap mounting bolts	**11 ± 1.1 Nm**
exhaust manifold mounting nuts	**26 ± 2.6 Nm**
turbocharger mounting nuts	**26 ± 2.6 Nm**
the turbocharger oil supply pipe mounting bolt (turbocharger end)	**23 ± 2.3 Nm**
the turbocharger oil supply pipe mounting nut (cylinder head end)	**collar nut 35 ± 3.5 Nm or no collar nut 23 ± 2.3 Nm**

Tightening torques ▽	
EGR valve-exchanger mounting bolts	**25 ± 2.5 Nm**
mounting bolts of the exhaust gas recirculation pipe	**35 ± 3.5 Nm**
engine lifting eye mounting bolts (timing end)	**21 ± 2.1 Nm**
camshaft pulley hub nut	**30 ± 3 Nm + 86° ± 6°**
the cylinder head coolant outlet bolt	**11 ± 1.1 Nm**
the EGR exchanger cover mounting bolt	**12 ± 1.2 Nm**
vacuum pump mounting bolts	**21 ± 2.1 Nm**
the heater plugs	**15 ± 1.5 Nm**
the engine lifting eye mounting bolts (flywheel end)	**13 ± 1.3 Nm**
the injector bracket bolts	**28 ± 2.8 Nm**
high-pressure pump mounting bolts	**21 ± 2.1 Nm**
injector rail mounting nuts	**28 ± 2.8 Nm**
the pump-rail high-pressure pipe nuts	**24 ± 2.4 or 38 ± 3.8 Nm**
the rail-injectors high-pressure pipe nuts	**24 ± 2.4 or 38 ± 3.8 Nm**

I - RECOMMENDATIONS FOR REPAIR

IMPORTANT

It is essential to follow the cleanliness guidelines (see **Engine: Precautions during repair**).

Wear latex gloves while using the cleaning product.

K9K, and 274 or 276 or 714 or 716 or 718 or 766 or 768

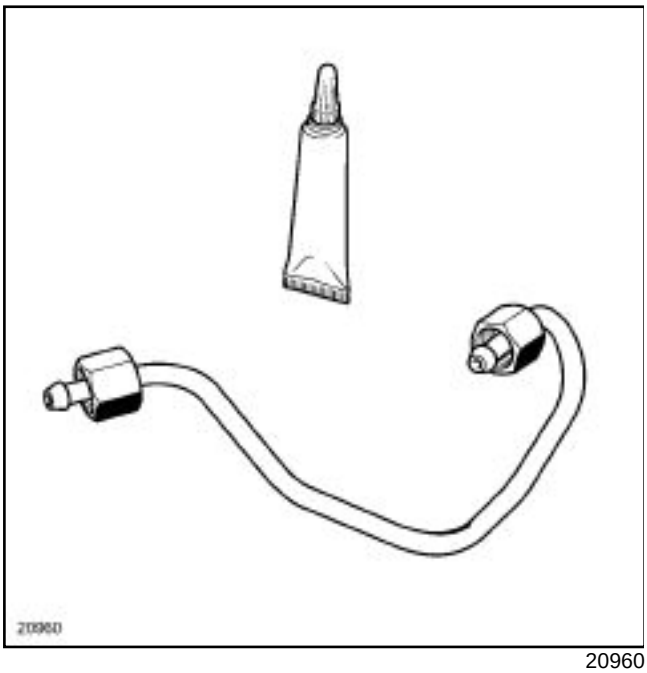

20960

WARNING

Before fitting a new high-pressure pipe, lightly lubricate the nut threads with oil from the applicator provided with the new part.

Be careful not to allow oil into the high-pressure pipe.

Do not lubricate high-pressure pipes supplied without an applicator; these pipes are self-lubricating.

Do not remove the blanking plugs from each component until the last moment.

Do not blast with compressed air once the fuel circuit is open, otherwise impurities may enter the system.

Tighten to torque (**38 ± 3.8 Nm**) the pump-rail and rail-injectors high-pressure pipes, part nos.:

- **77 01 207 025**
- **77 01 207 026**
- **77 01 207 027**
- **77 01 207 028**
- **77 01 207 029**

For the high-pressure pipes with the remaining part nos, tighten to torque (**24 ± 2.4 Nm**).

Applying excess sealant could cause it to be squeezed out when parts are tightened. A mixture of sealant and fluid could damage certain components (engine, radiator, etc.)

The sealing surfaces must be clean, dry and free from grease (avoid finger marks).

The gaskets must always be replaced.

The camshaft pulley mounting stud must be replaced if it comes loose as the camshaft pulley is removed.

Do not grease the valve stem seals.

II - PARTS AND CONSUMABLES FOR THE REPAIR

Parts always to be replaced

- Camshaft pulley nut,
- Camshaft seal (timing end),
- The injector heat protection washers,
- High-pressure pipes,
- The EGR exchanger cover seal,
- The vacuum pump seal,

K9K, and 274 or 276 or 714 or 716 or 718 or 766 or 768

- The cylinder head coolant outlet unit seal,
- The exhaust manifold gasket,
- The turbocharger seal
- The inlet duct gasket,
- The exhaust gas recirculation pipe,
- The EGR solenoid valve seal,
- Valve stem seals

Consumables

- Loctite 518 part no. **77 01 421 162** ,
- High-resistance bolt locking product, part no. **77 11 230 112** ,
- Degreasing agent, part no. **77 11 224 559** .

III - EQUIPMENT REQUIRED

- Latex protective gloves,
- Valve wrench,
- Tweezers,
- Wrench for the high-pressure pipes,
- Crow foot wrench,
- Wrench with hinge for heater plugs,
- Roller-type stud removal tool
- Oil can,
- The valve stem seal fitting kit,
- Dial gauge,
- Magnetic holder,
- Torque/angle wrench,
- Torque wrench
- Cylinder head bolt tightening gauge (angular measuring type).

K9K, and 274 or 276 or 714 or 716 or 718 or 766 or 768

IV - REASSEMBLING THE CYLINDER HEAD

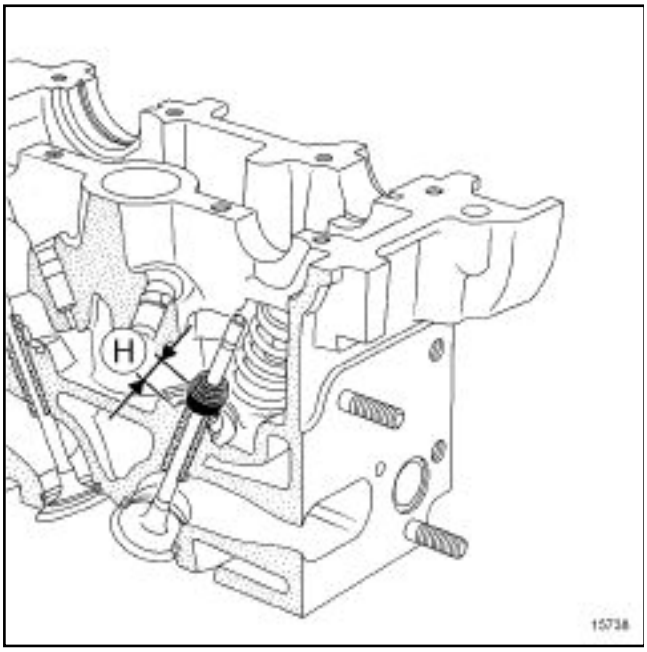

15738

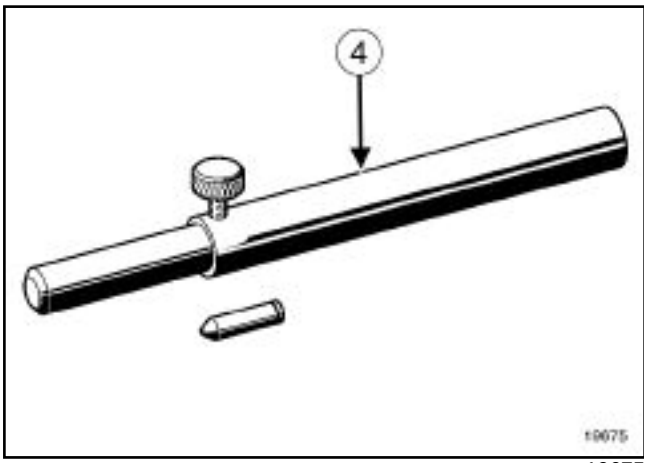

19675

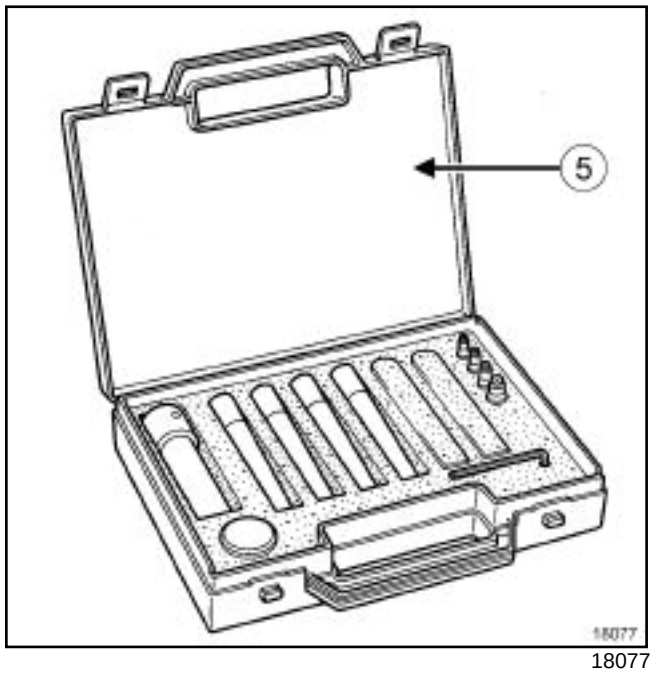

18077

Note:

Before removing the valve stem seals, it is essential to note the position *(H)* of the old seals on the inlet side, then the exhaust side, as the fitting dimensions of the seals may be different between the inlet and the exhaust.

Fit a valve.

Compare dimension (**H**) of an old seal with the cylinder head using the **(Mot. 1511-01)** (**4**) or the valve stem seal fitting kit (**5**) .

Note:

The internal diameter of the pushrod *(1)* should be identical to that of the valve; In addition, the bottom of the pushrod must be snug against the metal upper section of the valve stem seal.

K9K, and 274 or 276 or 714 or 716 or 718 or 766 or 768

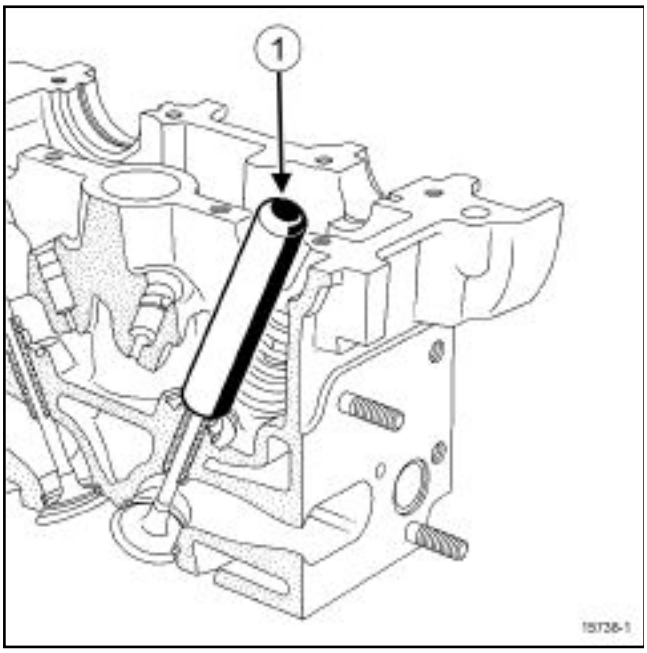

15738-1

Place the pushrod (**1**) over the valve stem seal.

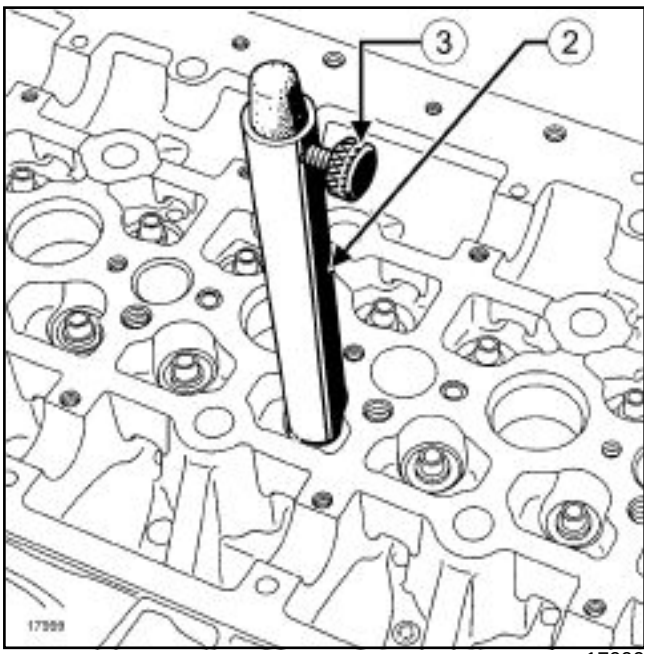

17999

Fit the guide tube (**2**) above the pushrod until it comes into contact with the cylinder head.

Lock the pushrod with the wheel (**3**) .

Remove the guide tube-pushrod assembly, being careful not to loosen the wheel.

Remove:

- the valve,
- the valve stem seals (inlet end then exhaust end) using the **(Mot. 1335)** .

Apply engine oil to the inside of the valve guide.

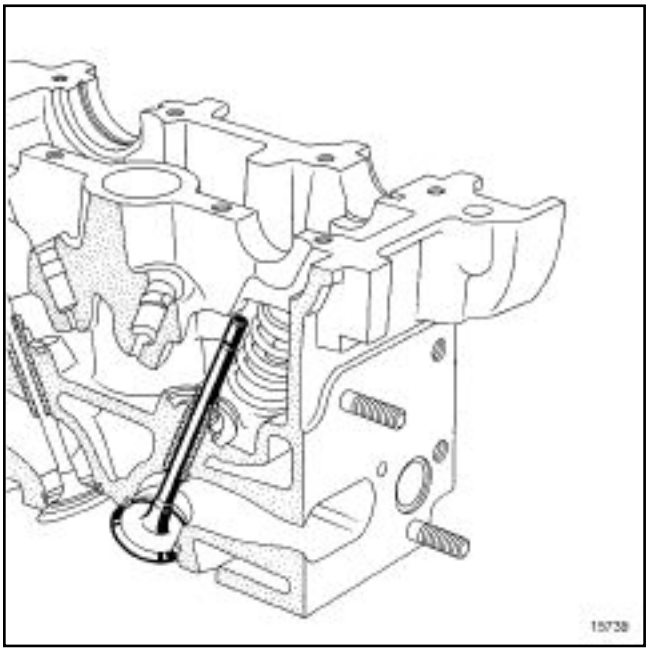

15739

Place the valve in the cylinder head.

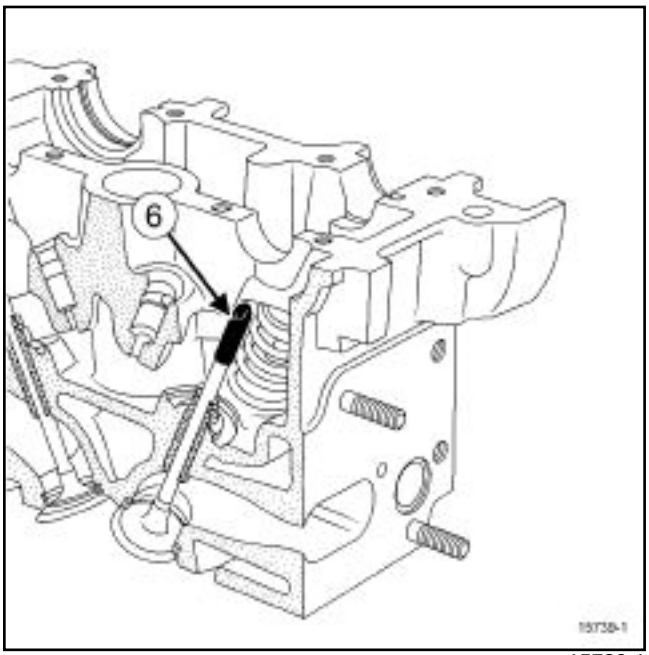

15739-1

Place the valve insert (**6**) on the valve stem (the diameter of the valve insert should be identical to that of the valve stem).

K9K, and 274 or 276 or 714 or 716 or 718 or 766 or 768

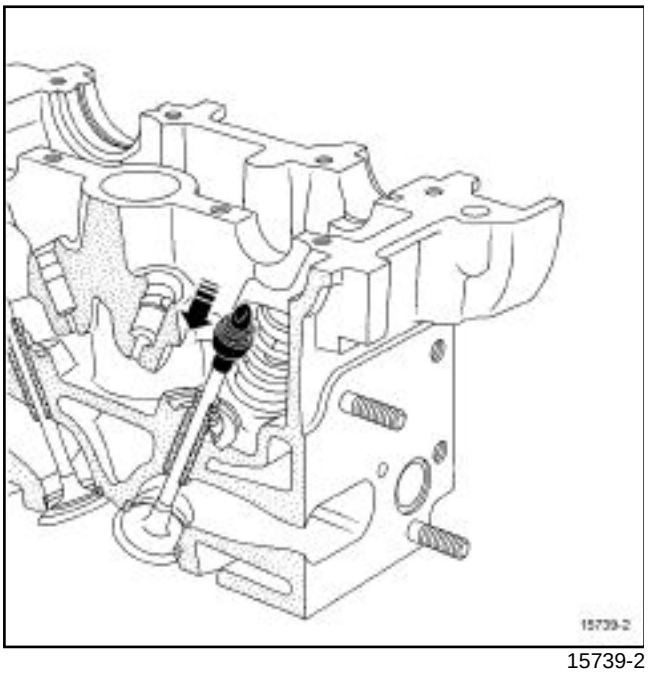

15739-2

Keep the valve pressed against its seat.

Mount the valve stem seal (not lubricated) over the valve insert.

Push the valve stem seal until it goes past the valve insert.

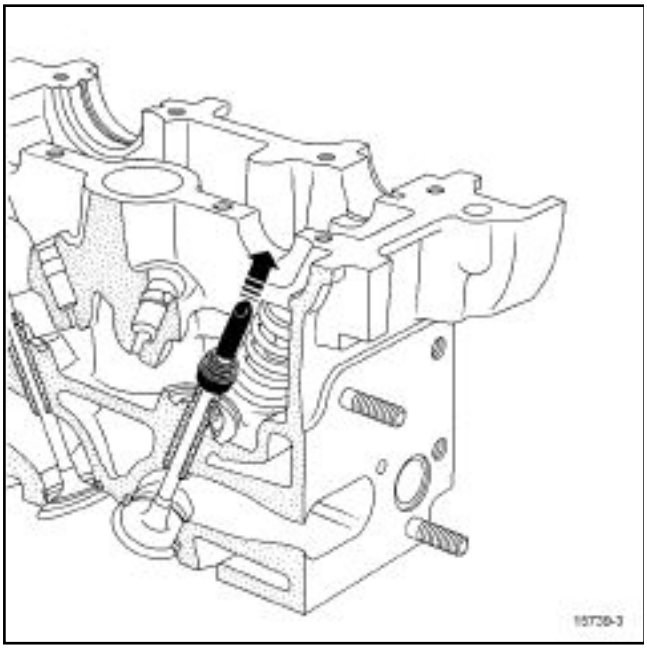

15739-3

Remove the valve insert.

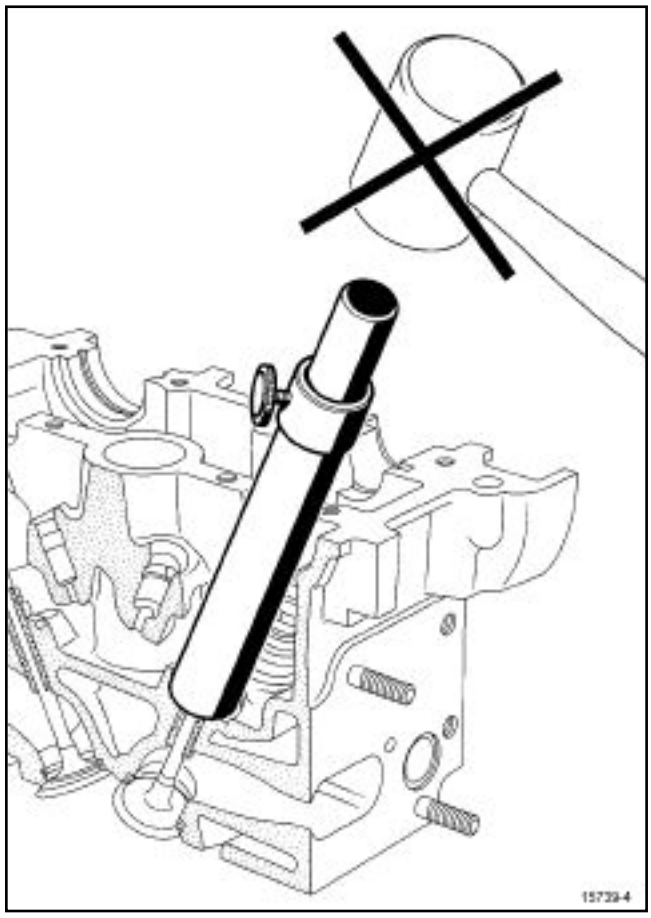

15739-4

Fit the guide tube-pushrod assembly on the valve stem seal.

Push home the valve stem seal by gently striking the pushrod with the palm of the hand, until the guide tube makes contact with the cylinder head.

Repeat the preceding operations on all the inlet and exhaust valves.

K9K, and 274 or 276 or 714 or 716 or 718 or 766 or 768

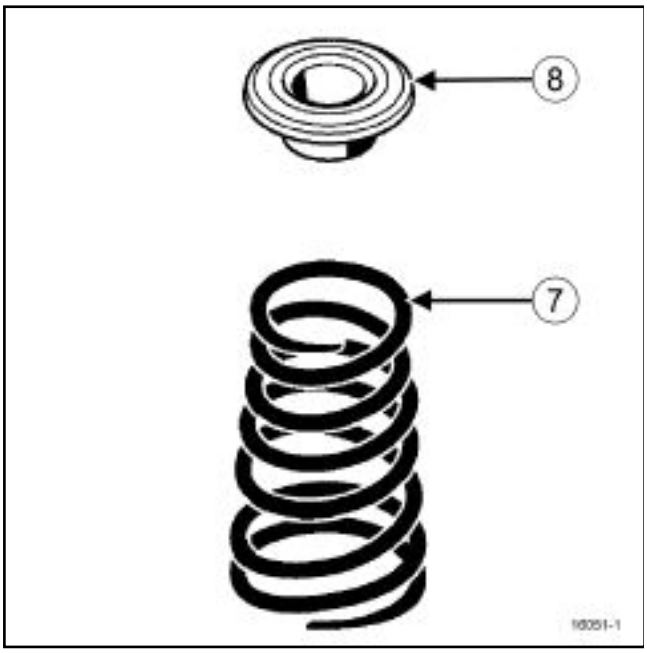

16051-1

Refit:

- the valve springs, positioning the conical part (**7**) of the spring at the top,
- the valve spring upper cups (**8**) ,

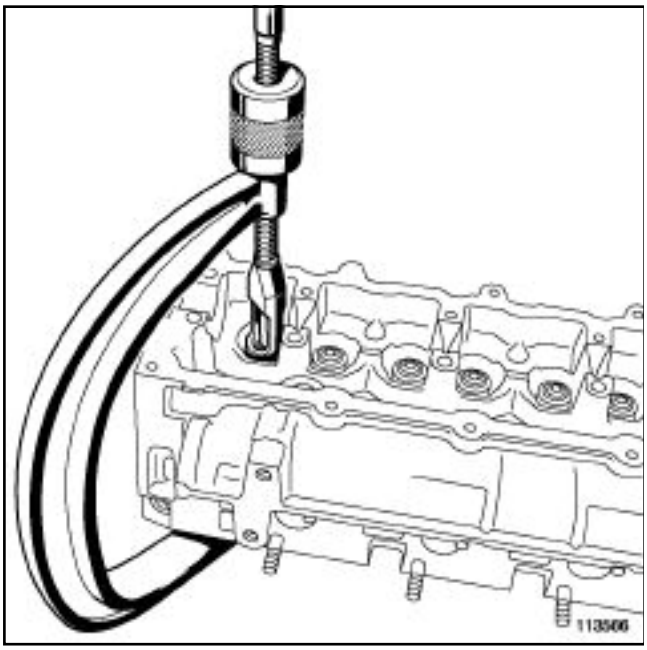

113566

Compress the valve springs using the **(Mot. 1502)** or a valve wrench.

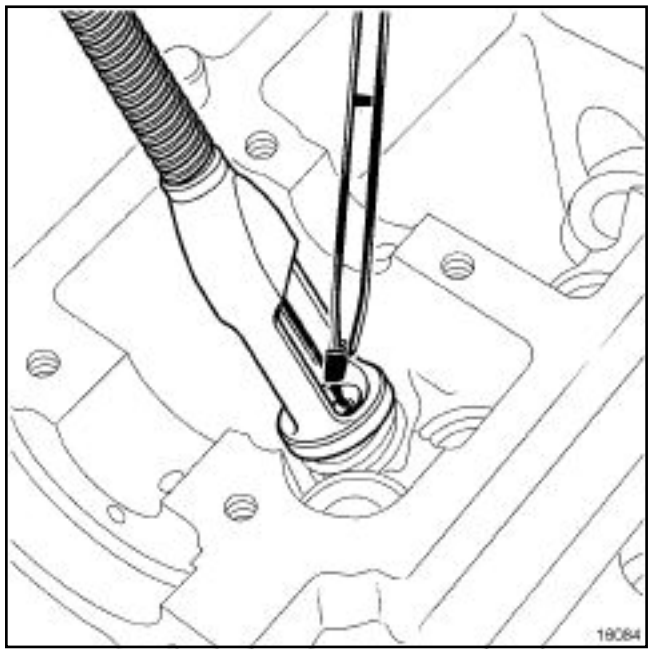

16084

Refit the cotters using tweezers.

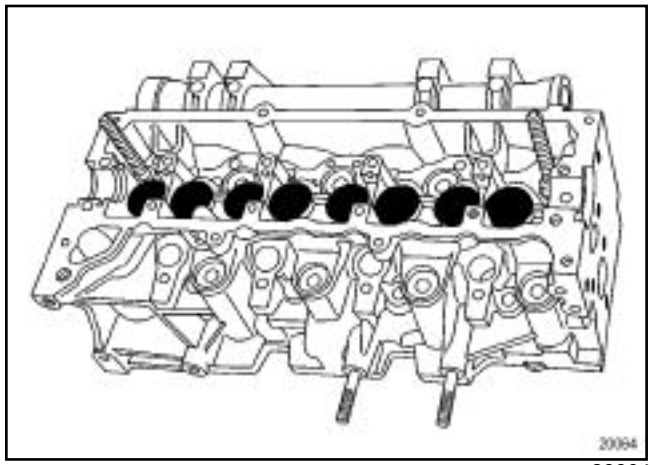

20064

Refit the pushrods observing their original position.

Oil the valve pushrods and the camshaft bearings with engine oil.

K9K, and 274 or 276 or 714 or 716 or 718 or 766 or 768

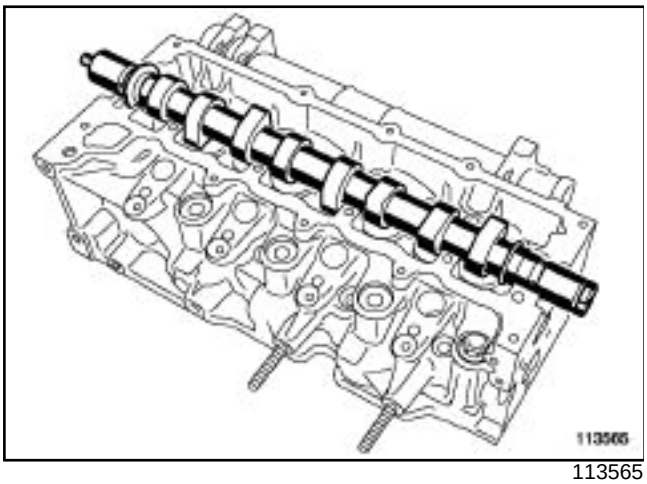

113565

Refit the camshaft.

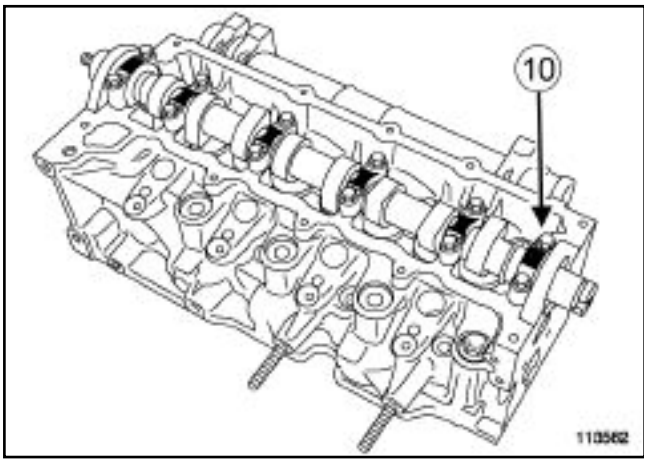

113562

Refit the camshaft bearing caps (observing their original positions, bearing No. 1 (**10**) engine flywheel end).

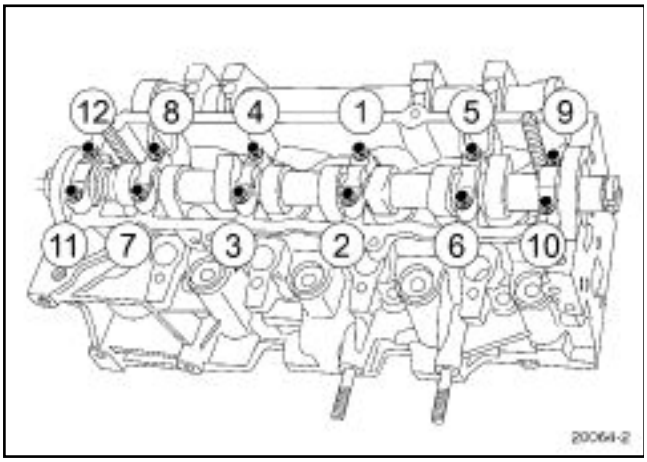

20064-2

Tighten to torque and in order **the crankshaft bearing cap mounting bolts (11 ± 1.1 Nm)** .

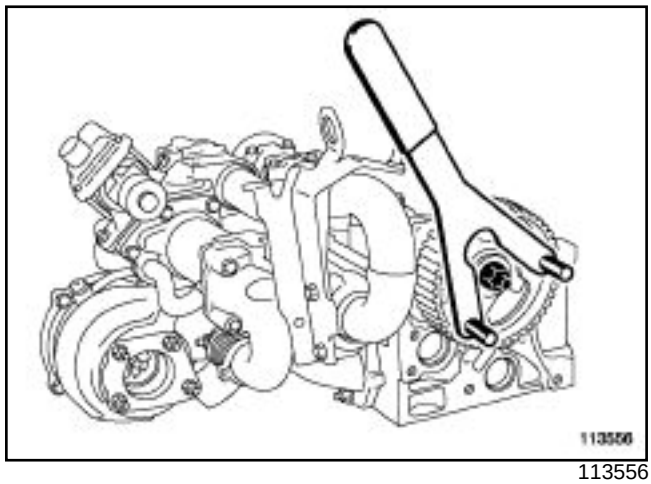

113556

Refit:

- the camshaft pulley hub,
- the camshaft pulley,
- the old exhaust camshaft pulley mounting nut.

Tighten to torque **the mounting nut for the camshaft pulley (15 ± 1.5 Nm)** , blocking the camshaft pulley with the **(Mot. 799-01)** .

Check and adjust the valve clearances following the procedure below.

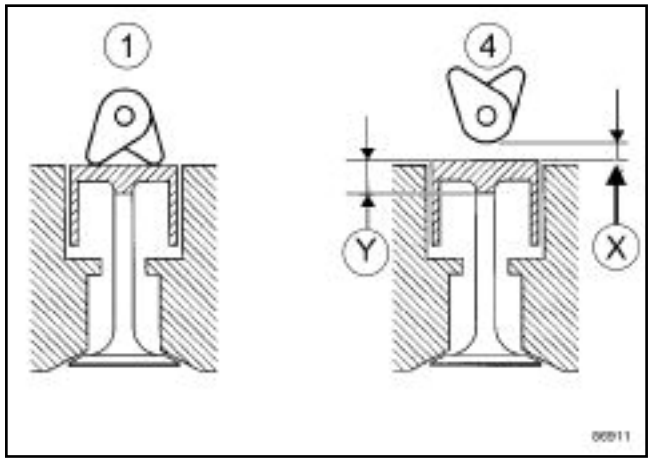

86911

Position the cylinder valves (**1**) in the end of exhaust stroke, beginning of inlet stroke position.

Measure the valve clearance (**X**) of the cylinder (**4**) using a set of shims.

- inlet valve clearance **0.20 mm** ,
- exhaust valve clearance **0.40 mm** ,

Note the clearance values.

Repeat the above operations on the other cylinders:

- position cylinder No. **3** at an angle and measure the clearance of cylinder No. **2** ,

K9K, and 274 or 276 or 714 or 716 or 718 or 766 or 768

- position cylinder No. **4** at an angle and measure the clearance of cylinder No. **1** ,
- position cylinder No. **2** at an angle and measure the clearance of cylinder No. **3** ,

Compare the values noted with the specified values.

Remove:

- the nut from the camshaft pulley,
- the camshaft pulley,
- the camshaft pulley hub,
- the camshaft bearing caps,
- the camshaft,
- the pushrod(s) which are outside of permitted tolerance values, noting their original position.

Undertake the following installation to determine the class of thickness of the valve pushrod.

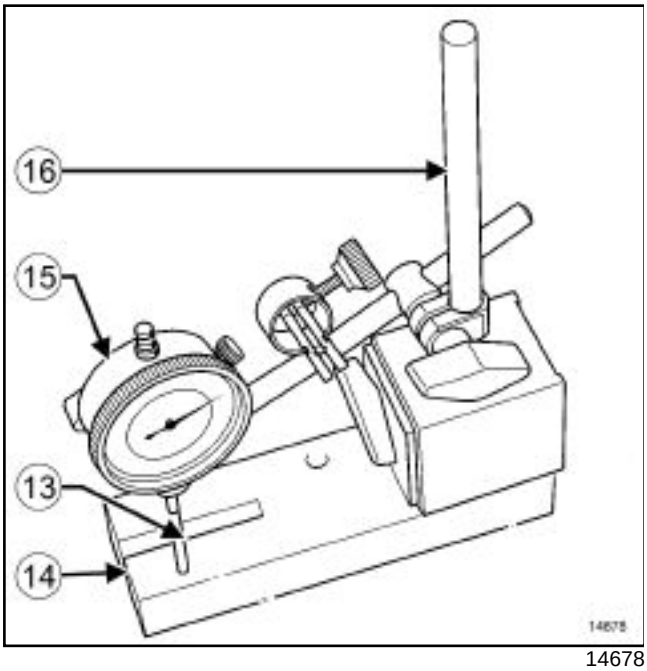

14678

Screw the extension piece (**13**) of the **(Mot. 856-02)** to a dial gauge (**15**) .

Fix the dial gauge (**15**) to a magnetic holder (**16**) .

Mount the dial gauge-magnetic holder assembly on the plate (**14**) of the tool **(Mot. 252-01)** .

Calibrate the dial gauge.

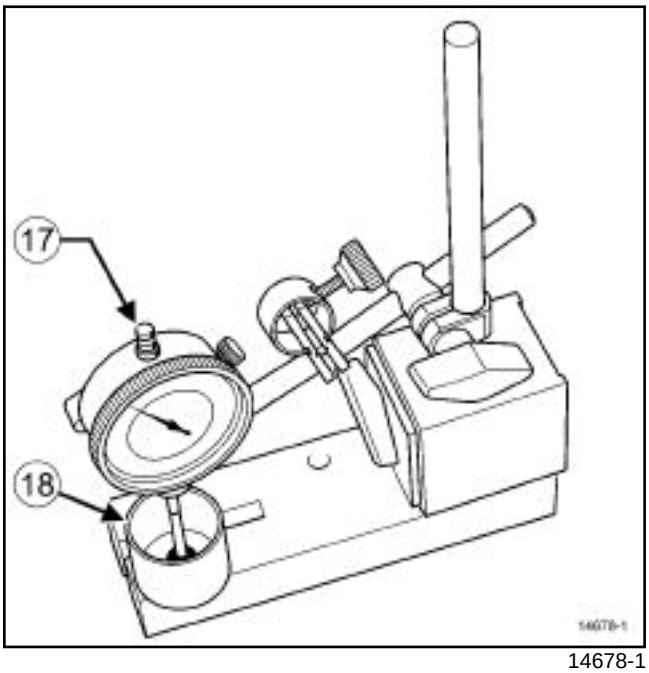

14678-1

Lift the top piece (**17**) of the dial gauge (without changing the position of the dial gauge-magnetic holder assembly).

Mount the valve pushrod (**18**) to be measured on the plate of the **(Mot. 252-01)** .

Take the measurement ***(Y)*** .

Repeat the preceding operations for the other valve pushrods to be measured.

Fit the new valve pushrod(s) in the cylinder head.

Check that the camshaft pulley mounting stud has not come loose. If so, the stud must be replaced following the procedure described below.

Place the camshaft in a vice fitted with a clamping jaw.

K9K, and 274 or 276 or 714 or 716 or 718 or 766 or 768

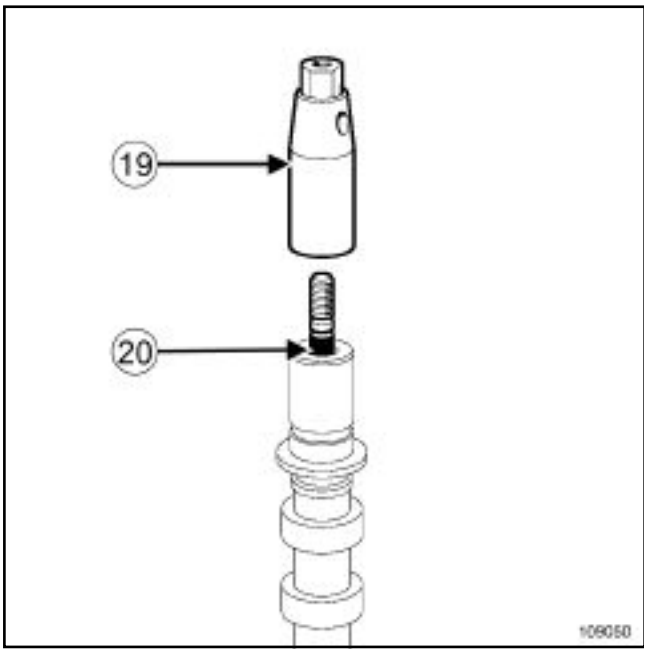

109050

Remove the piston rings using a roller-type stud removal tool (**19**) .

Clean the threaded hole of the camshaft carefully to prevent foreign bodies from entering the latter.

Fit the new stud on the camshaft (precoated section ***(20)*** on the camshaft side).

Tighten to torque **the camshaft pulley mounting stud (12 ± 2 Nm)** using a roller-type stud removal tool ***(19)*** .

Oil the top of the valve pushrods and the camshaft bearings with engine oil.

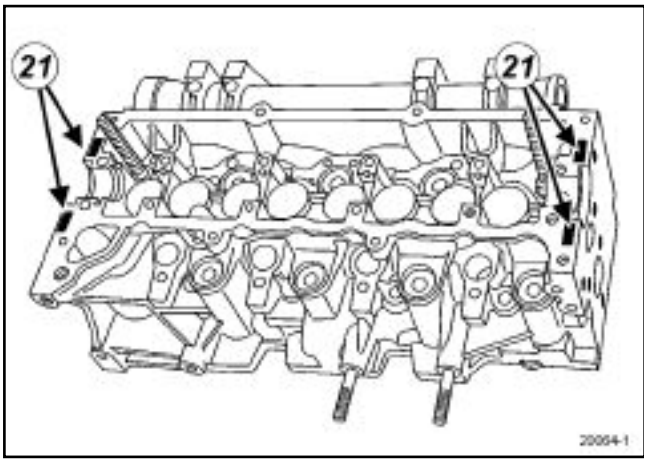

20064-1

Degrease the surfaces of the camshaft bearing gaskets nos. 1 and 6 (**21**) using degreaser.

Apply four beads of **LOCTITE 518** of a width of **1 mm** to camshaft bearings nos. 1 and 6 (**21**) .

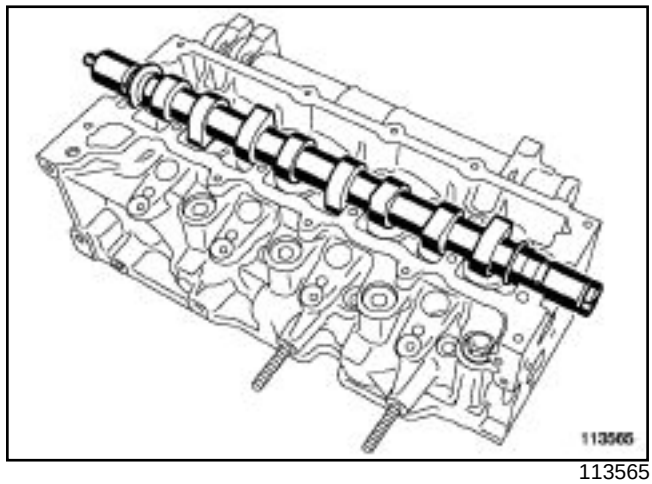

113565

Refit the camshaft.

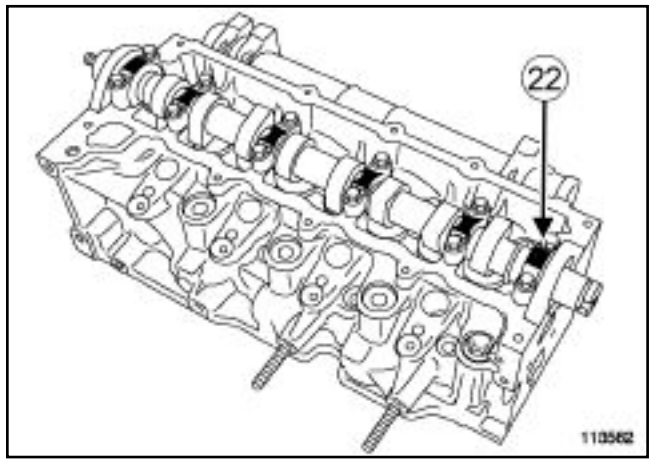

113562

Refit the camshaft bearing caps (observing their original positions, bearing No. 1 (**22**) engine flywheel end).

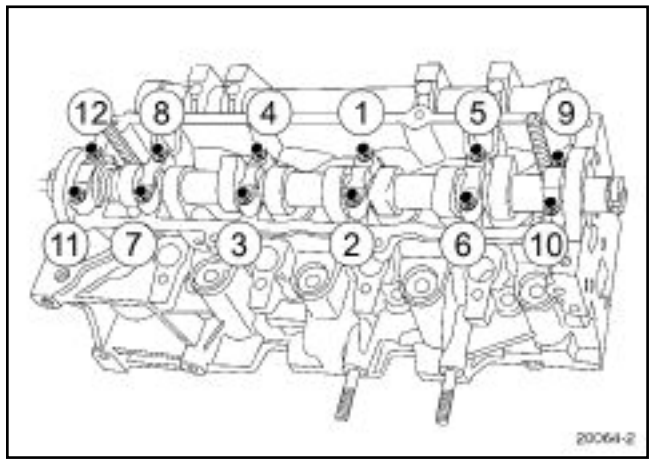

20064-2

Tighten to torque and in order **the crankshaft bearing cap mounting bolts (11 ± 1.1 Nm)** .

K9K, and 274 or 276 or 714 or 716 or 718 or 766 or 768

Apply degreaser to:

- the end of the camshaft at the timing end,
- the housing on the cylinder head of the camshaft gasket.

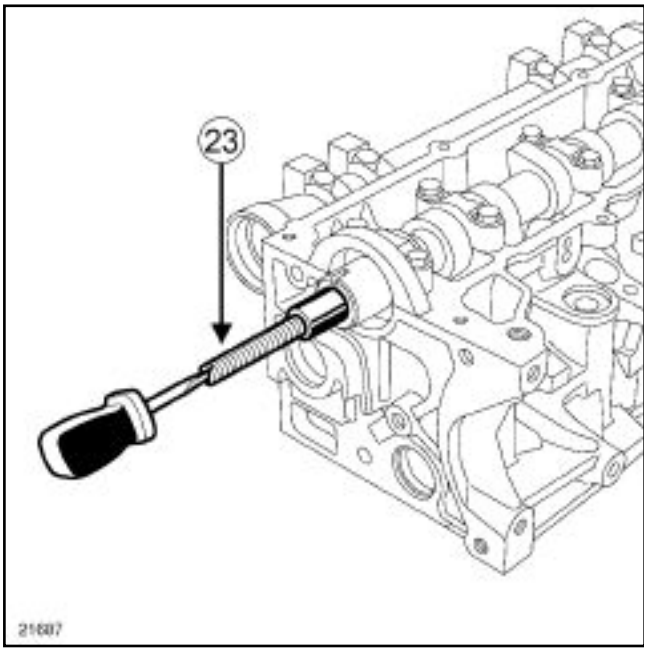

21687

Screw the shouldered stud (**23**) of the **(Mot. 1632)** onto the mounting stud of the camshaft pulley.

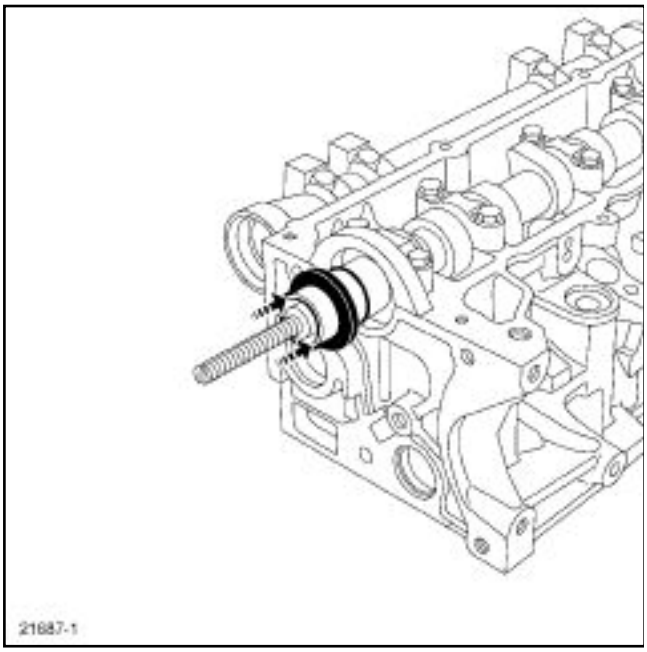

21687-1

Refit the camshaft gasket.

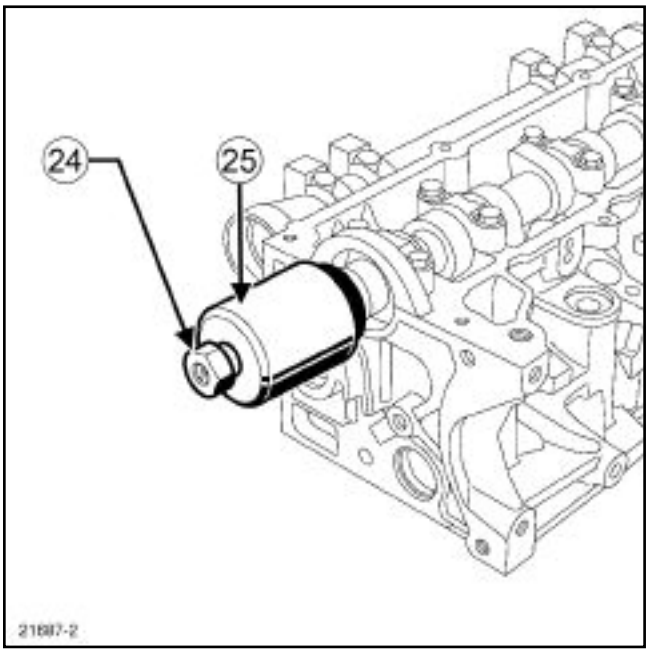

21687-2

Position the cover (**25**) and collar nut (**24**) of the **(Mot. 1632)** .

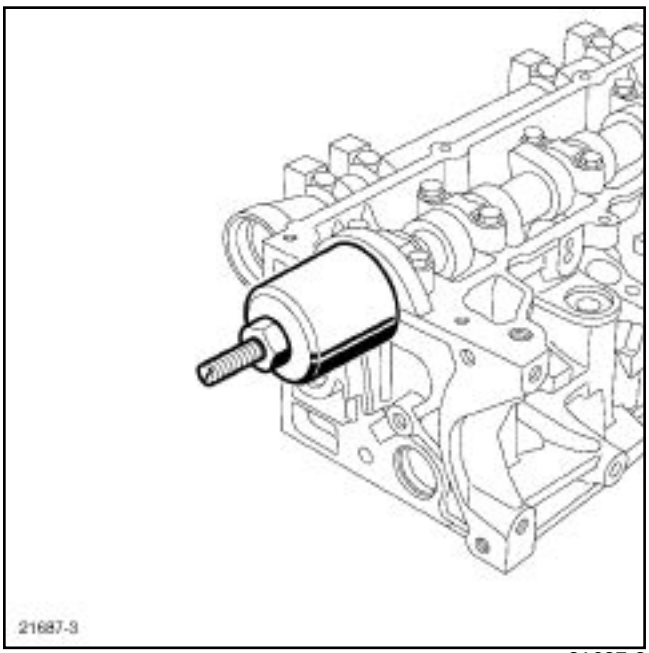

21687-3

Screw on the collar nut until the cover touches the cylinder head.

Remove:

- the collar nut,
- the cap,
- the collared stud.

Using degreaser, degrease the surfaces of the exhaust manifold and cylinder head gaskets at the exhaust end.

K9K, and 274 or 276 or 714 or 716 or 718 or 766 or 768

Refit:

- a new exhaust manifold gasket,
- the exhaust manifold,
- the exhaust manifold mounting nuts.

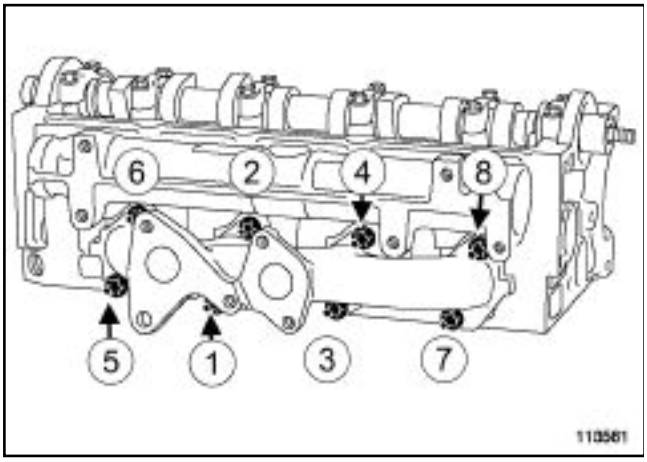

113561

Tighten to torque and in order the **exhaust manifold mounting nuts (26 ± 2.6 Nm)** .

Using degreaser, degrease the surfaces of the exhaust manifold (where the turbocharger enters) and the turbocharger gaskets.

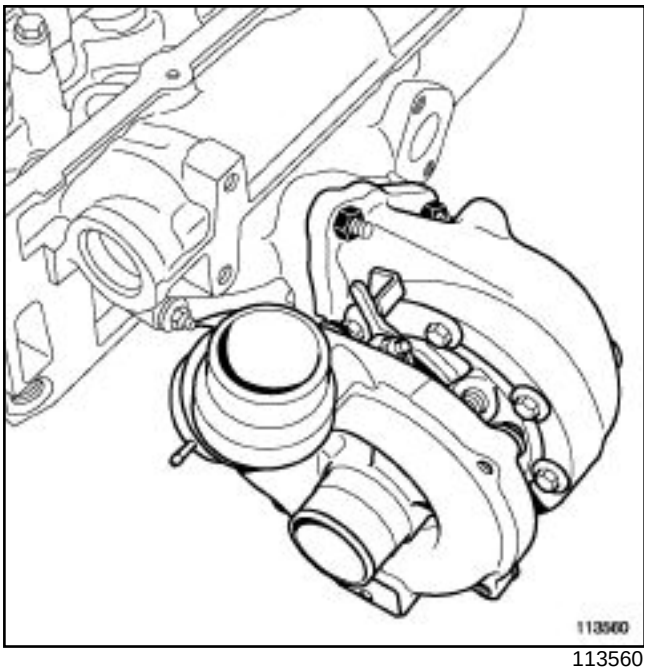

113560

Refit:

- the new turbocharger seal,
- the turbocharger.
- the turbocharger mounting nuts.

Tighten to torque the **turbocharger mounting nuts (26 ± 2.6 Nm)** .

Put a little engine oil from an oil can in the oil circuit of the turbocharger.

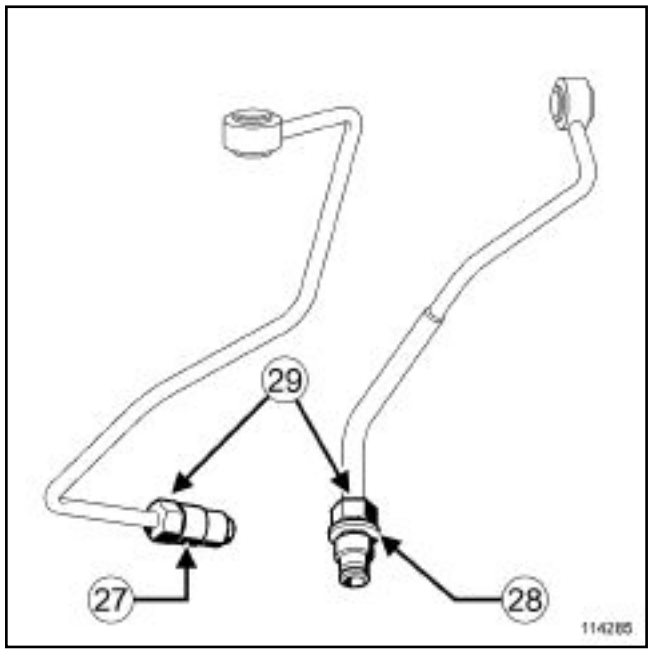

114285

Note:

These two turbocharger oil supply pipes may be used on the same engine. The tightening torque of the end pieces (**29**) on the cylinder head is different, depending on the following:

- if the end piece is **shouldered** (**28**) , in this case there will be no need to place the high-resistance bolt locking product on the end piece thread,
- if the end piece is **not shouldered** (**27**) , in this case it is essential to place the high-resistance bolt locking product on the end piece thread,

K9K, and 274 or 276 or 714 or 716 or 718 or 766 or 768

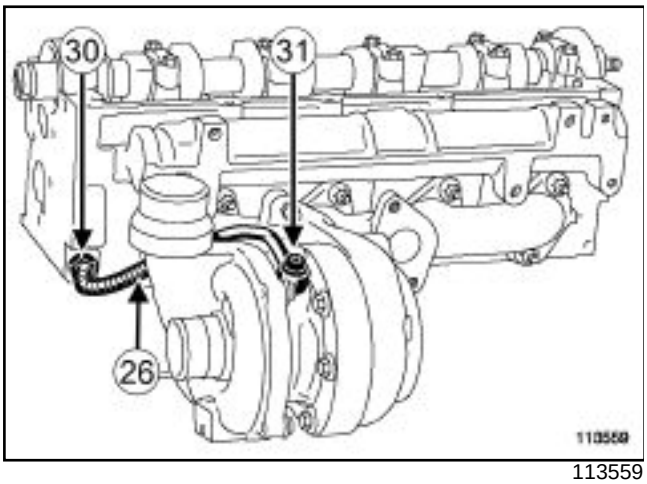

113559

Refit the turbocharger oil supply pipe (**26**) .

Screw on:

- the nut (**30**) on the cylinder head,
- the bolt (**31**) on the turbocharger.

Tighten to torque:

- **the turbocharger oil supply pipe mounting bolt (turbocharger end) (23 ± 2.3 Nm)** ,
- **the turbocharger oil supply pipe mounting nut (cylinder head end) (collar nut 35 ± 3.5 Nm or no collar nut 23 ± 2.3 Nm)** .

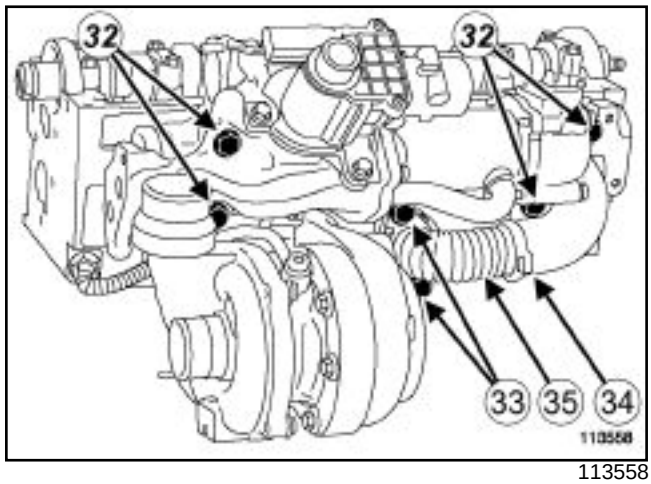

113558

Refit:

- the EGR valve-exchanger assembly,
- the mounting bolts (**32**) (without tightening them) of the EGR valve-exchanger.

Tighten to torque the **EGR valve-exchanger mounting bolts (25 ± 2.5 Nm)** . (**32**)

Refit:

- the new exhaust gas recirculation pipe (**35**) fitted with its new snap-on clip (**34**) ,
- the mounting bolts (**33**) of the exhaust gas recirculation pipe.

Adjust the exhaust gas recirculation pipe in relation to the cooler support.

Lock the snap-on clip of the exhaust gas recirculation pipe using the **(Mot. 1567)** .

Tighten to torque the **mounting bolts of the exhaust gas recirculation pipe (35 ± 3.5 Nm)** (**33**) .

Fit the new O-ring seals to the inlet pipe.

K9K, and 274 or 276 or 714 or 716 or 718 or 766 or 768

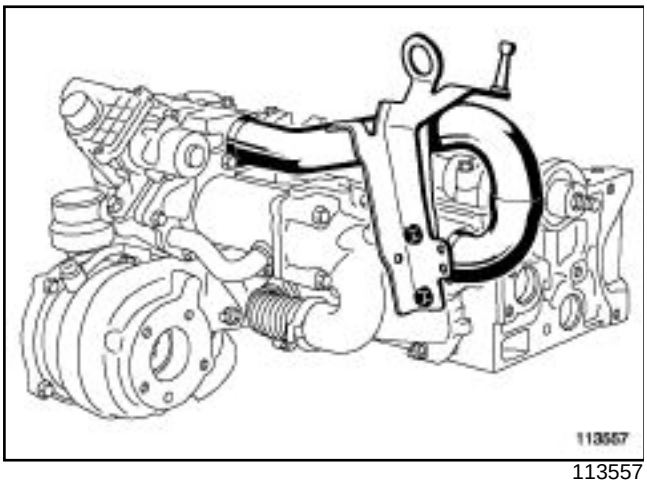

113557

Refit:

- the inlet duct,
- the engine lifting eye (timing end),
- the engine lifting eye mounting bolts.

Tighten to torque the **engine lifting eye mounting bolts (timing end) (21 ± 2.1 Nm)** .

Refit:

- the camshaft pulley hub,
- the new exhaust camshaft pulley hub mounting nut.

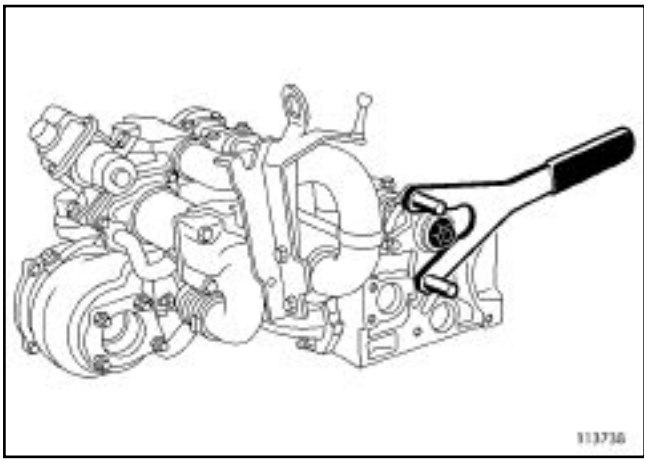

113738

Immobilise the hub using the **(Mot. 799-01)** .

Tighten to torque and angle the **camshaft pulley hub nut (30 ± 3 Nm + 86° ± 6°)** .

Refit the camshaft pulley (without tightening the mounting bolts).

Using degreaser, degrease the surfaces of the seals where the vacuum pump enters, the cylinder head coolant outlet and the EGR exchanger cover.

Fit new seals to the cylinder head coolant outlet and the EGR exchanger cover.

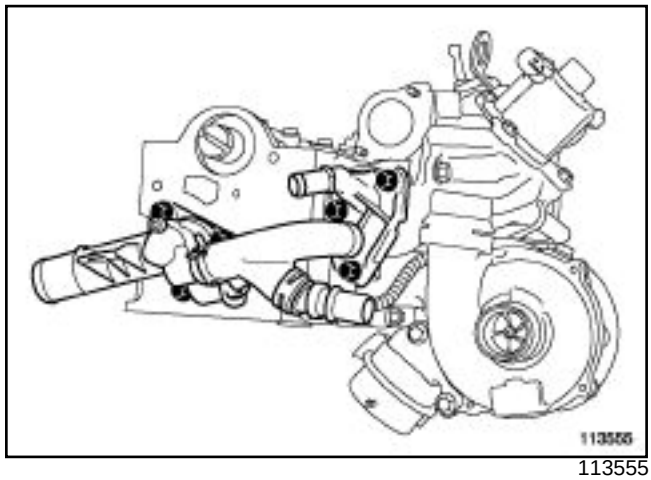

113555

Refit:

- the cylinder head coolant outlet unit-EGR exchanger cover assembly,
- the cylinder head coolant outlet unit mounting bolts,
- the EGR exchanger cover mounting bolts.

Tighten to torque:

- **the cylinder head coolant outlet bolt (11 ± 1.1 Nm)** ,
- **the EGR exchanger cover mounting bolt (12 ± 1.2 Nm)** .

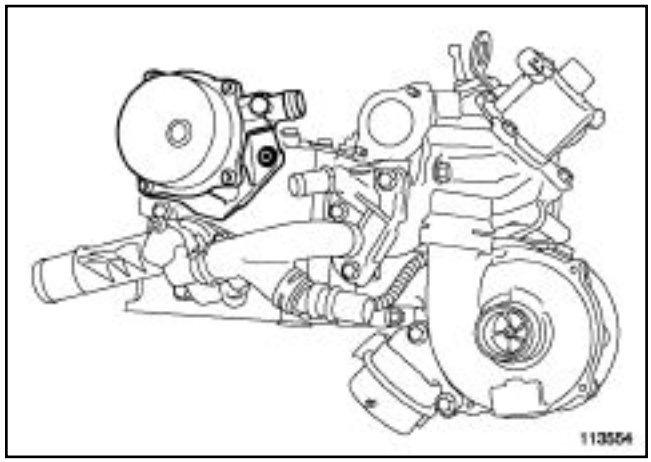

113554

Refit:

- the vacuum pump,
- the vacuum pump mounting bolts,

Tighten to torque the **vacuum pump mounting bolts (21 ± 2.1 Nm)** .

Refit the heater plugs.

K9K, and 274 or 276 or 714 or 716 or 718 or 766 or 768

Tighten to torque **the heater plugs (15 ± 1.5 Nm)** using a wrench with hinge.

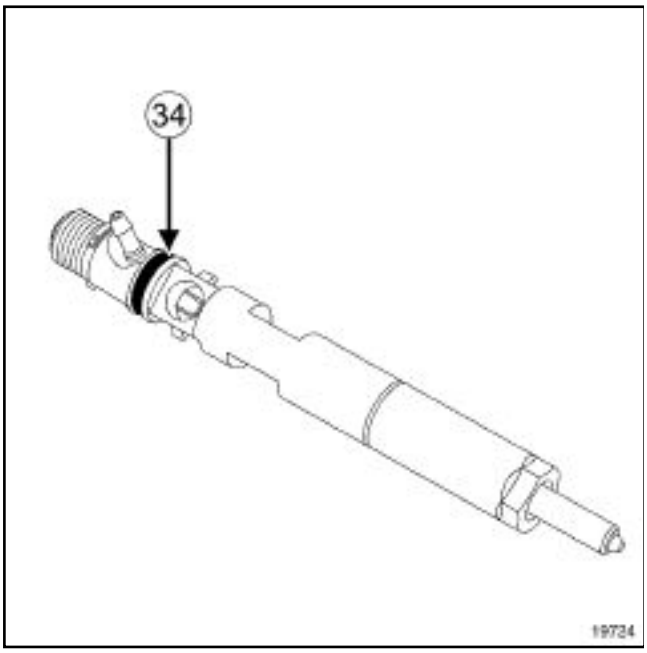

19724

Note:

If one or more injectors are replaced, note the alphanumeric code (C2I) (**34**) and the number of the cylinder on which it is fitted.

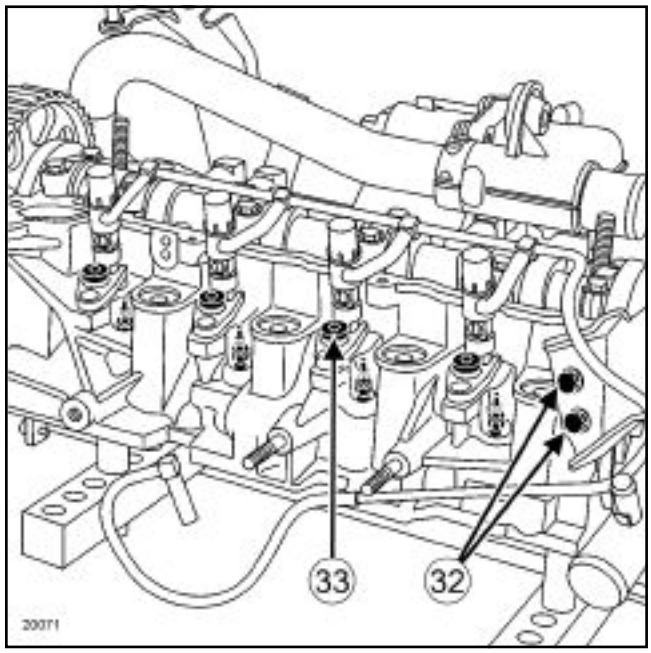

20071

Refit:

- the engine lifting eye (flywheel end),
- the new heat protection washers,
- the injectors (observing their positions),
- the injector brackets.

Tighten to torque:

- **the engine lifting eye mounting bolts (flywheel end) (13 ± 1.3 Nm)** (**32**) ,
- **the injector bracket bolts (28 ± 2.8 Nm)** (**33**) .

K9K, and 274 or 276 or 714 or 716 or 718 or 766 or 768

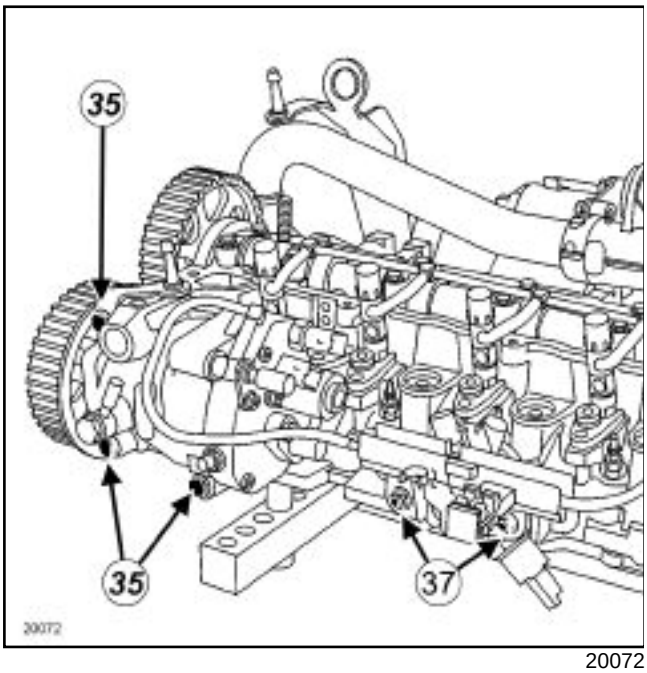

20072

Refit:

- the high-pressure pump,
- the injector rail **(without tightening the nuts)** ,

Tighten to torque the **high-pressure pump mounting bolts (21 ± 2.1 Nm)** .

Note:

Do not lubricate high-pressure pipes **supplied without an applicator; these pipes are self-lubricating.**

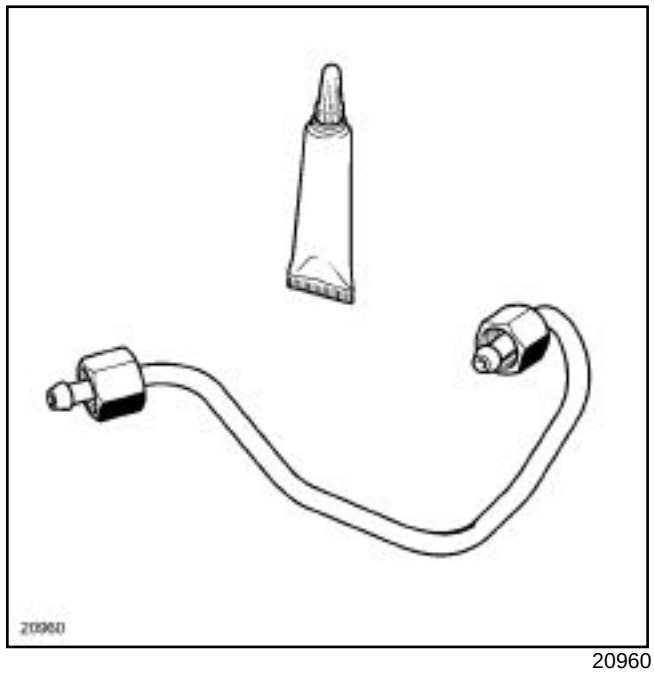

20960

Lightly lubricate the nut threads with oil from the applicator supplied with the new part, taking care not to insert it in the pipe.

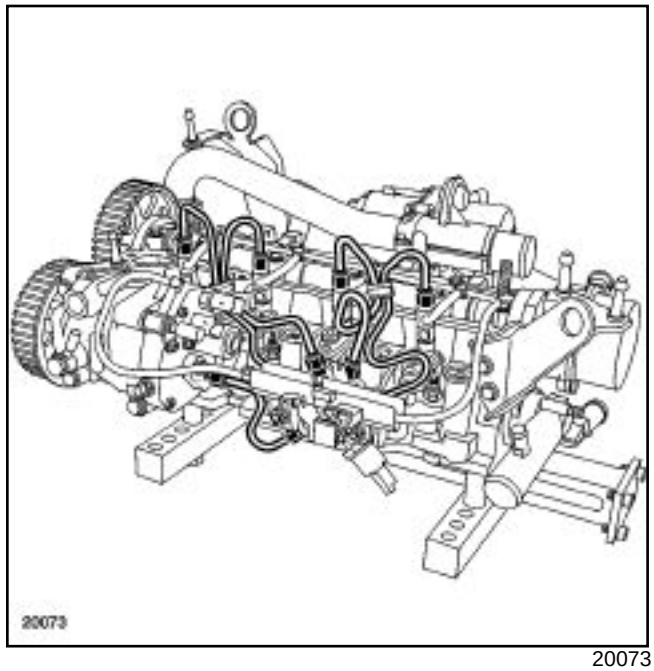

20073

Insert the high-pressure pipe olive in the injector high-pressure inlet taper.

Insert the high-pressure pipe olive in the rail high-pressure outlet taper.

Finger tighten the high-pressure pipe nuts, starting with the one located on the injector end.

Lightly tighten the nuts of the high-pressure pipes.

K9K, and 274 or 276 or 714 or 716 or 718 or 766 or 768

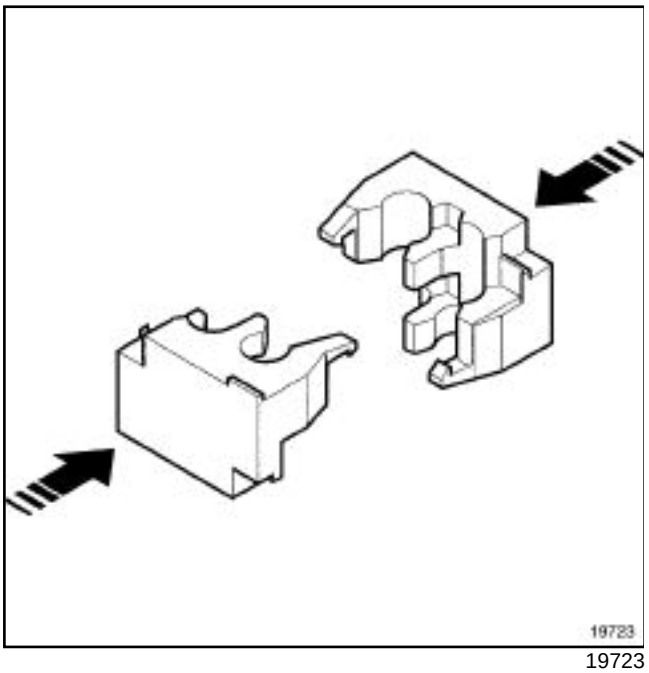

19723

Fit the new clip provided with the new high-pressure pipe.

Tighten to torque the **injector rail mounting nuts (28 ± 2.8 Nm)** .

Note:

Completely tighten one high-pressure pipe before moving to the next one.

Tighten to torque and in order (according to the part no. of the pipe) **the pump-rail high-pressure pipe nuts (24 ± 2.4 or 38 ± 3.8 Nm)** :

- the high-pressure pump side, using the **(Mot. 1746)** or a crow foot wrench,
- the injector rail side, using the **(Mot. 1746)** or a crow foot wrench,

Tighten to torque and in order (according to the part no. of the pipe) **the rail-injectors high-pressure pipe nuts (24 ± 2.4 or 38 ± 3.8 Nm)** :

- the injector side using the **(Mot. 1566)** or with a wrench for high-pressure pipes.
- the injector rail side, using the **(Mot. 1566)** or a crow foot wrench,

K9K, and 732 or 764

Special tooling required	
Mot. 1511-01	Valve stem seal fitting tool adapter.
Mot. 1335	Pliers for removing valve stem seals.
Mot. 1502	Valve lifting tool for removing valves.
Mot. 799-01	Timing gear wheel immobiliser.
Mot. 856-02	Dial gauge support.
Mot. 252-01	Dial gauge support thrust plate.
Mot. 1632	Tool for fitting PTFE camshaft seal
Mot. 1567	Long nose pliers for EGR duct clips.
Mot. 1566	Spanner for removing high pressure pipes.
Mot. 1746	Offset spanner for tightening high pressure pump pipes.

Tightening torques ▽	
the crankshaft bearing cap mounting bolts	**11 ± 1.1 Nm**
the camshaft pulley mounting stud	**12 ± 2 Nm**
crankshaft bearing cap mounting bolts	**11 ± 1.1 Nm**
exhaust manifold mounting nuts	**26 ± 2.6 Nm**
turbocharger mounting nuts	**26 ± 2.6 Nm**
the turbocharger oil supply pipe mounting bolt (turbocharger end)	**23 ± 2.3 Nm**
the turbocharger oil supply pipe mounting nut (cylinder head end)	**35 ± 3.5 Nm**

Tightening torques ▽	
EGR valve-exchanger mounting bolts	**25 ± 2.5 Nm**
mounting bolts of the exhaust gas recirculation pipe	**35 ± 3.5 Nm**
engine lifting eye mounting bolts (timing end)	**21 ± 2.1 Nm**
camshaft pulley hub nut	**30 ± 3 Nm + 86° ± 6°**
the cylinder head coolant outlet unit bolt	**11 ± 1.1 Nm**
the EGR exchanger cover mounting bolt	**12 ± 1.2 Nm**
vacuum pump mounting bolts	**21 ± 2.1 Nm**
the heater plugs	**15 ± 1.5 Nm**
the injector bracket mounting bolts	**30 ± 3 Nm**
injector rail mounting nuts	**28 ± 2.8 Nm**
the rail-injectors high-pressure pipe nuts	**24 ± 2.4 or 38 ± 3.8 Nm**
high-pressure pump mounting bolts	**21 ± 2.1 Nm**
the rail-injectors high-pressure pipe nuts	**24 ± 2.4 or 38 ± 3.8 Nm**
high-pressure protector bolts and nuts	**21 ± 2.1 Nm**

I - RECOMMENDATIONS FOR REPAIR

IMPORTANT

It is essential to follow the cleanliness guidelines (see **Engine: Precautions during repair**).

Wear latex gloves while using the cleaning product.

K9K, and 732 or 764

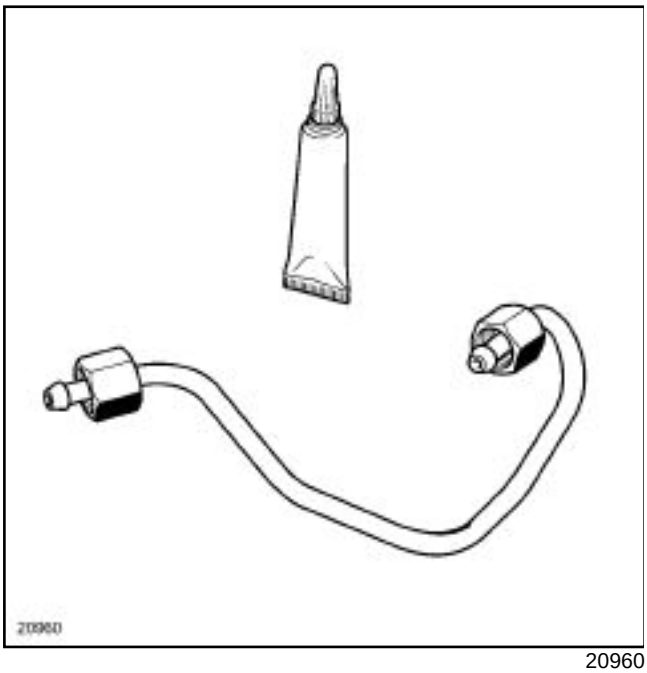

20960

WARNING

Before fitting a new high-pressure pipe, lightly lubricate the nut threads with oil from the applicator provided with the new part.

Be careful not to allow oil into the high-pressure pipe.

Do not lubricate high-pressure pipes supplied without an applicator; these pipes are self-lubricating.

Do not remove the blanking plugs from each component until the last moment.

Do not blast with compressed air once the fuel circuit is open, otherwise impurities may enter the system.

Tighten to torque (**38 ± 3.8 Nm**) the pump-rail and rail-injectors high-pressure pipes, part nos.:

- **77 01 207 025**
- **77 01 207 026**
- **77 01 207 027**
- **77 01 207 028**
- **77 01 207 029**

For the high-pressure pipes with the remaining part nos, tighten to a torque of (**24 ± 2.4 Nm**).

Applying excess sealant could cause it to be squeezed out when parts are tightened. A mixture of sealant and fluid could damage certain components (engine, radiator, etc.)

The sealing surfaces must be clean, dry and free from grease (avoid finger marks).

The gaskets must always be replaced.

The camshaft pulley mounting stud must be replaced if it comes loose as the camshaft pulley is removed.

Do not grease the valve stem seals.

II - PARTS AND CONSUMABLES FOR THE REPAIR

Parts always to be replaced

- Camshaft pulley nut,
- Camshaft seal (timing end),
- The injector heat protection washers,
- high-pressure pipes,
- The EGR exchanger cover seal,
- The vacuum pump seal,

K9K, and 732 or 764

- The cylinder head coolant outlet unit seal,
- The exhaust manifold gasket,
- The turbocharger seal
- The inlet tube gasket,
- The exhaust gas recirculation pipe,
- The EGR solenoid valve seal,
- Valve stem seals

Consumables

- Loctite 518, part no. **77 01 421 162** ,
- High-resistance bolt locking product, part no. **77 11 230 112** ,
- Degreasing agent, part no. **77 11 224 559** .

III - EQUIPMENT REQUIRED

- Latex protective gloves,
- Valve wrench,
- Tweezers,
- Wrench for the high-pressure pipes,
- Crow foot wrench,
- Wrench with hinge for heater plugs,
- Roller-type stud removal tool
- Oil can,
- The valve stem seal fitting kit,
- Dial gauge,
- Magnetic holder,
- Torque/angle wrench,
- Torque wrench
- Cylinder head bolt tightening gauge (angular measuring type).

IV - REASSEMBLING THE CYLINDER HEAD

K9K, and 732 or 764

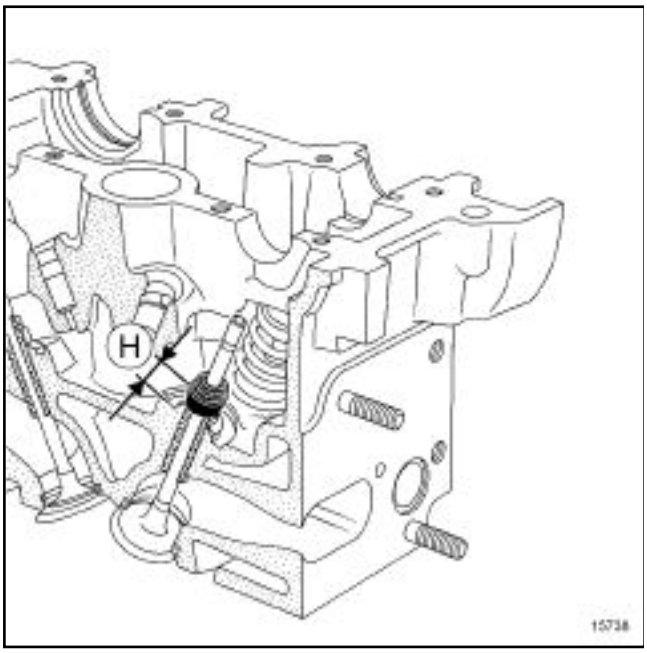

15738

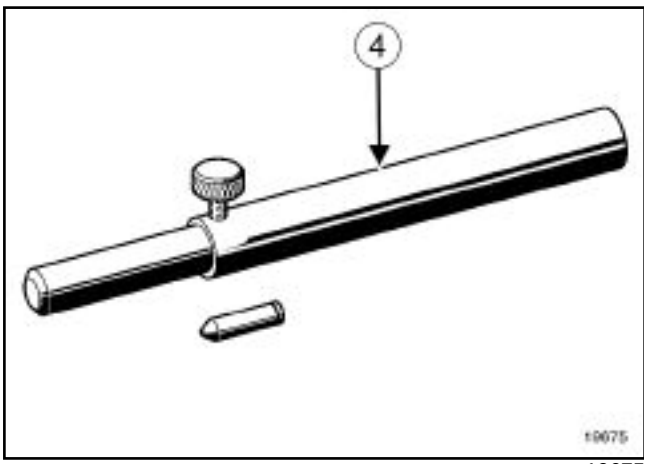

19675

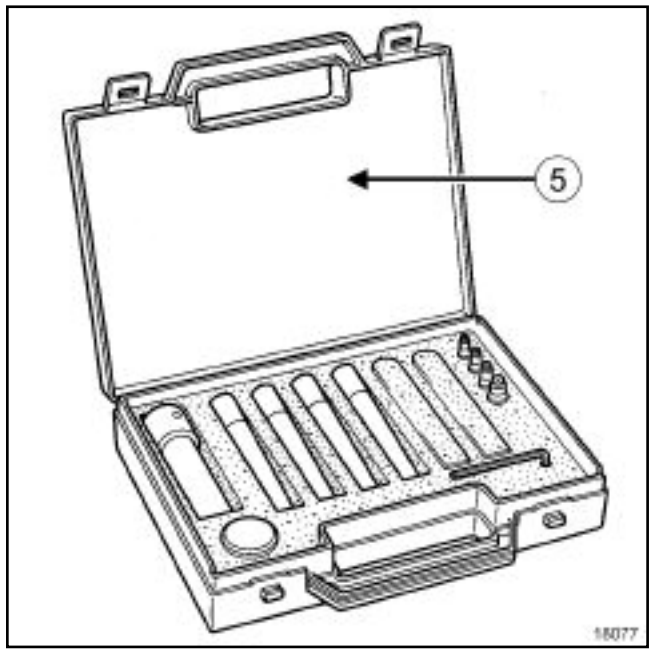

18077

Note:

Before removing the valve stem seals, it is essential to note the position *(H)* of the former seals on the inlet side, then the exhaust side as the fitting dimension of the seals may be different between the inlet and the exhaust.

Fit a valve.

Compare the dimension (**H**) of an old seal with the cylinder head using the **(Mot. 1511-01)** (**4**) or the valve stem seal fitting set (**5**) .

Note:

The internal diameter of the pushrod *(1)* should be identical to that of the valve; In addition, the bottom of the pushrod must be snug against the metal upper section of the valve stem seal.

K9K, and 732 or 764

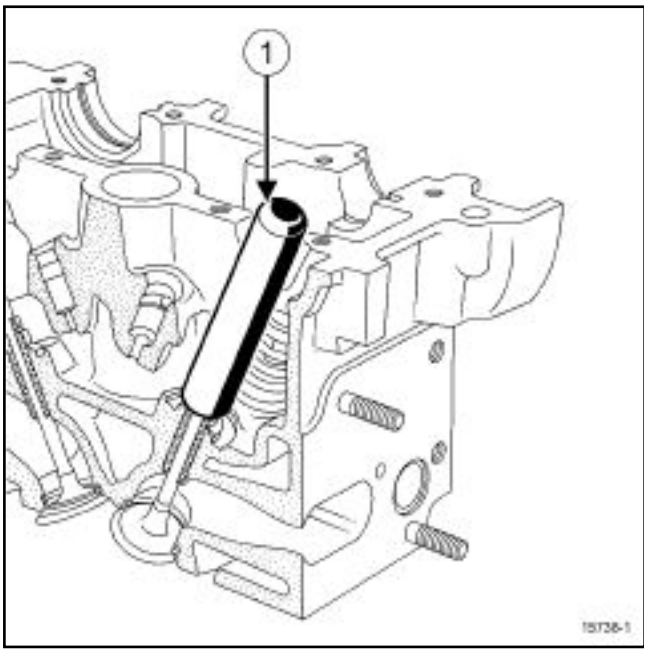

15738-1

Place the pushrod (**1**) over the valve stem seal.

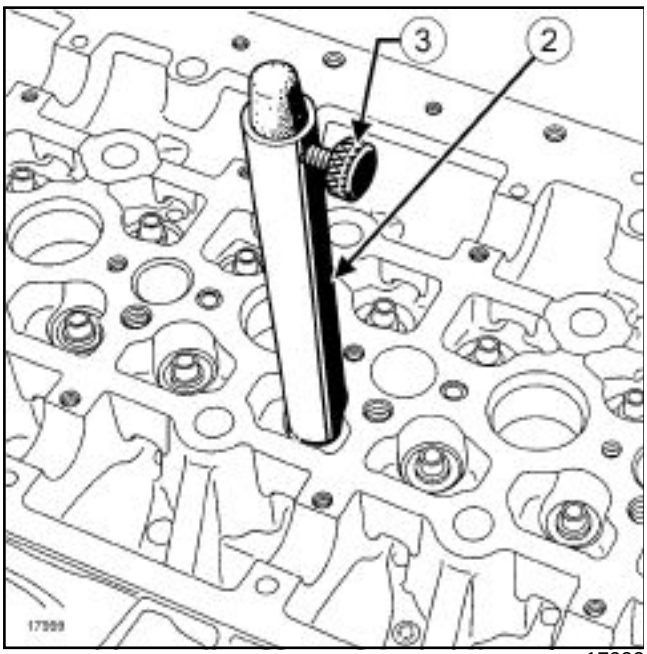

17999

Fit the guide tube (**2**) above the pushrod until it comes into contact with the cylinder head.

Lock the pushrod with the wheel (**3**) .

Remove the guide tube-pushrod assembly, being careful not to loosen the wheel.

Remove:

- the valve,
- the valve stem seals (inlet end then exhaust end) using the **(Mot. 1335)** .

Apply engine oil to the inside of the valve guide.

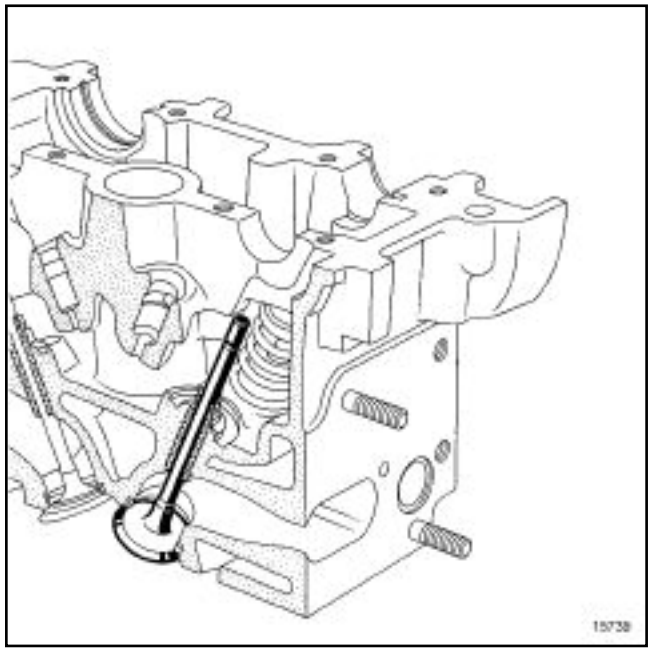

15739

Place the valve in the cylinder head.

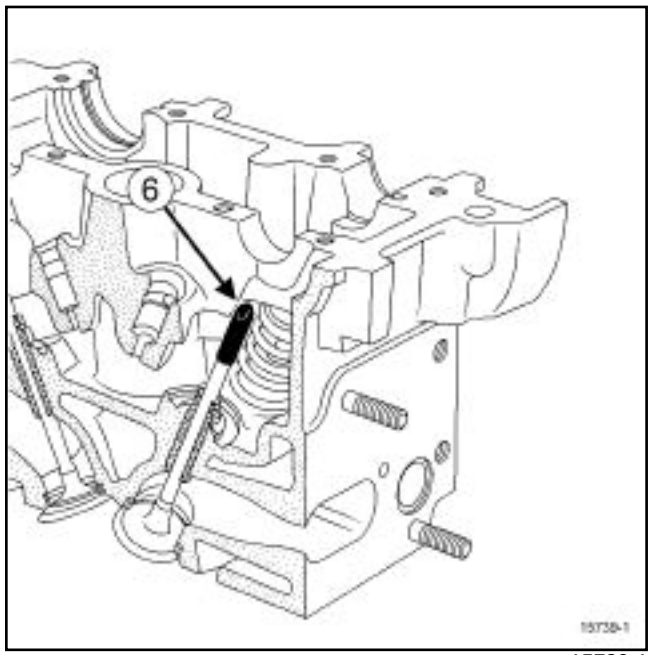

15739-1

Place the valve insert (**6**) on the valve stem (the diameter of the valve insert should be identical to that of the valve stem).

K9K, and 732 or 764

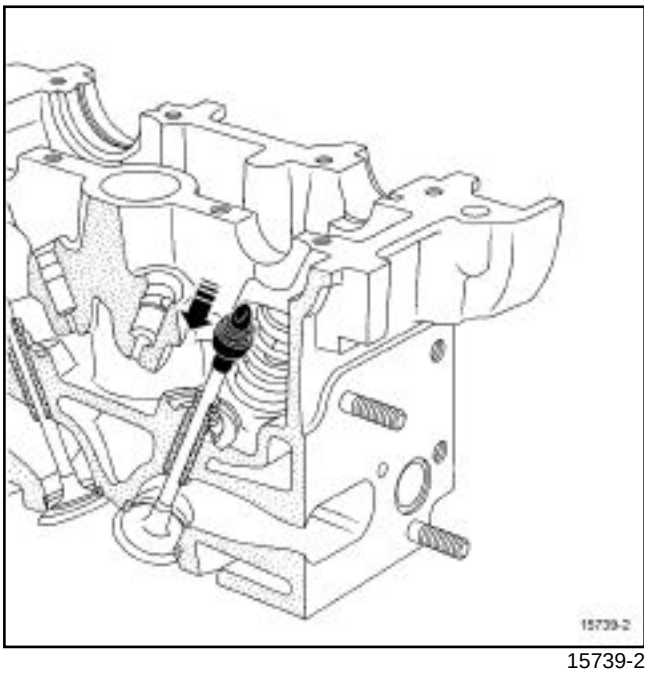

15739-2

Keep the valve pressed against its seat.

Mount the valve stem seal (not lubricated) over the valve insert.

Push the valve stem seal until it goes past the valve insert.

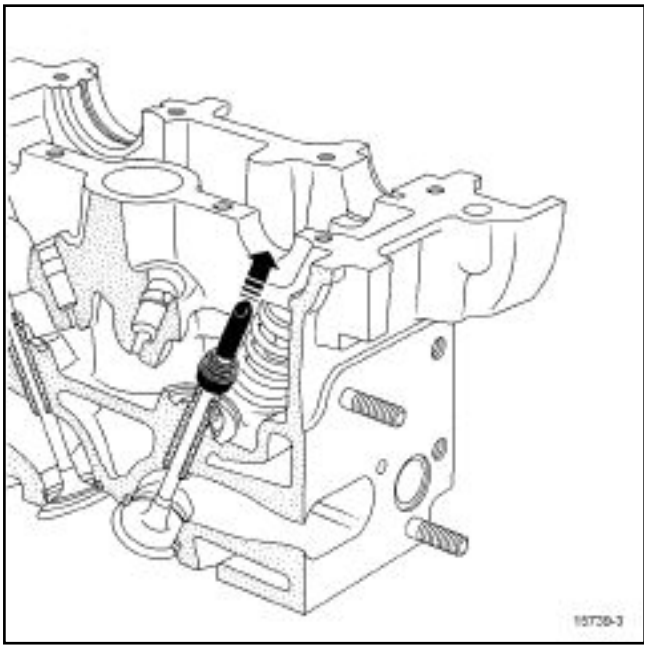

15739-3

Remove the valve insert.

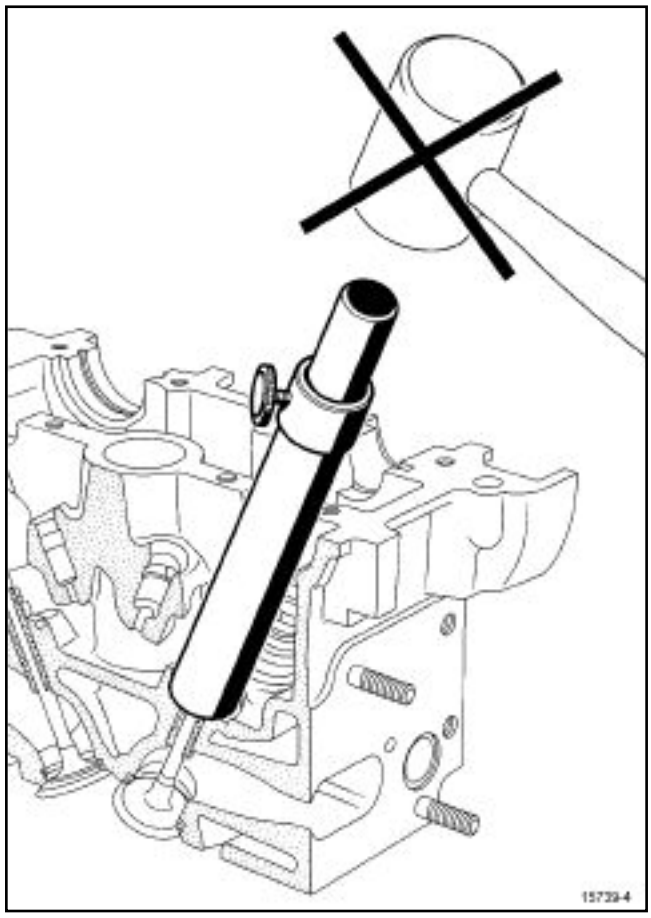

15739-4

Fit the guide tube-pushrod assembly on the valve stem seal.

Push home the valve stem seal by gently striking the pushrod with the palm of the hand, until the guide tube makes contact with the cylinder head.

Repeat the preceding operations on all the inlet and exhaust valves.

K9K, and 732 or 764

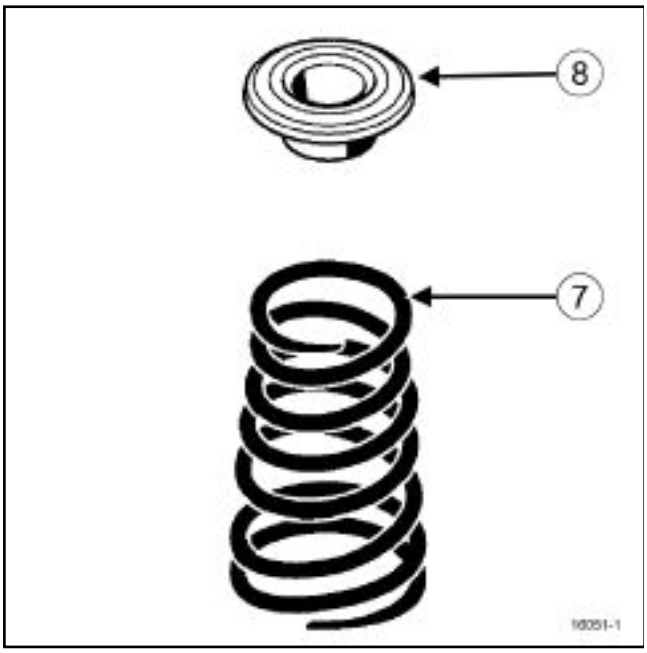

16051-1

Refit:

- the valve springs, positioning the conical part (**7**) of the spring at the top,
- the valve spring upper cups (**8**) .

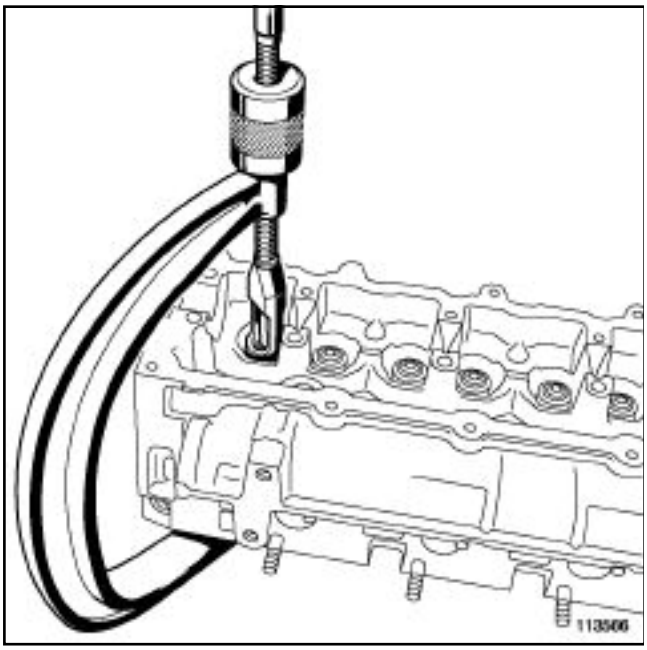

113566

Compress the valve springs using the **(Mot. 1502)** or a valve wrench.

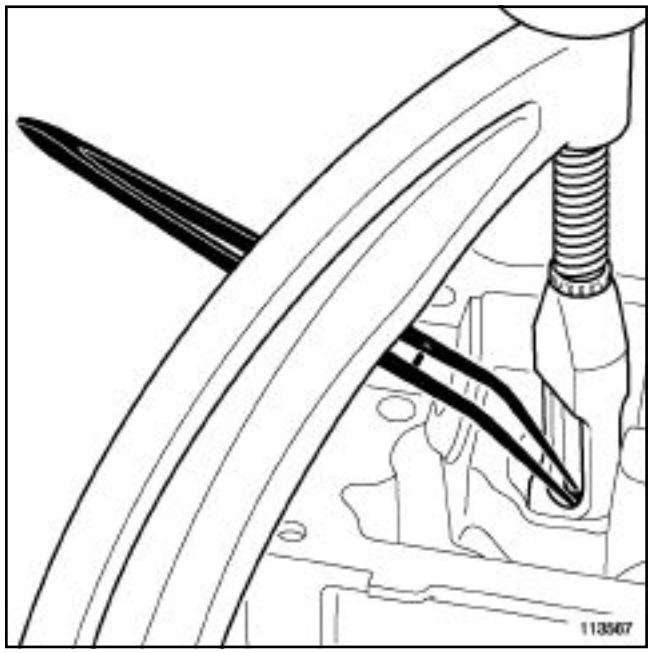

113567

Refit the cotters using tweezers.

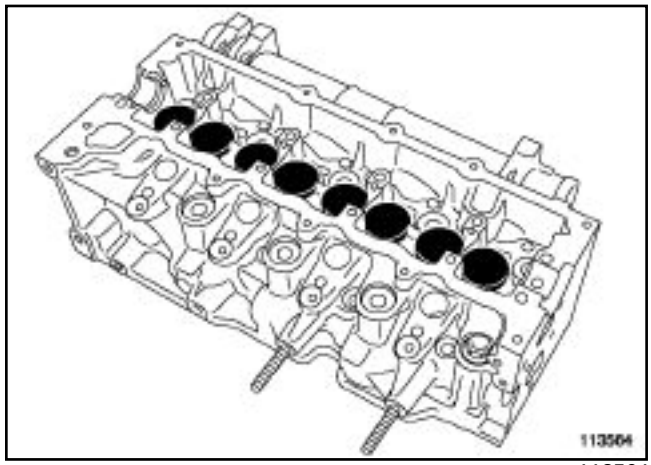

113564

Refit the pushrods observing their original position.

Lubricate the valve pushrods and the camshaft bearings with engine oil.

K9K, and 732 or 764

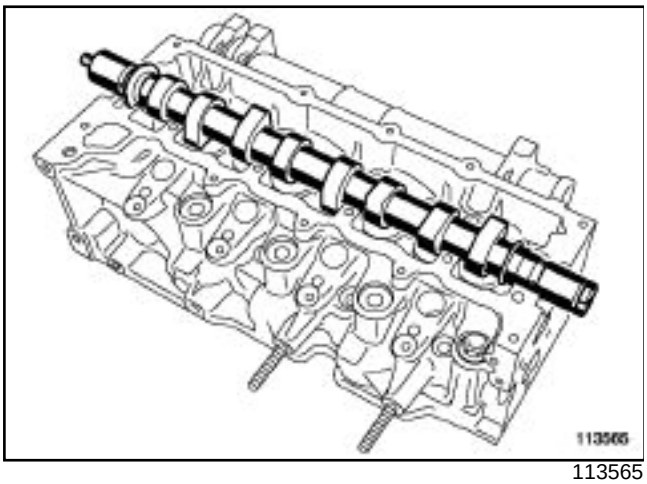

113565

Refit the camshaft.

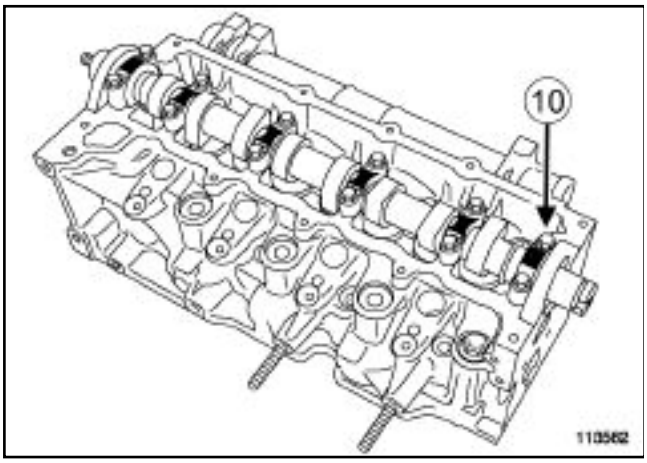

113562

Refit the camshaft bearing caps (observing their original positions, bearing No. 1 (**10**) engine flywheel end).

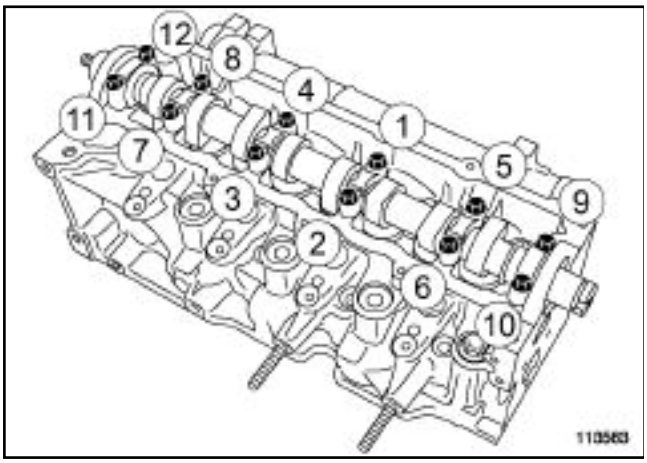

113563

Tighten to torque and in order **the crankshaft bearing cap mounting bolts (11 ± 1.1 Nm)** .

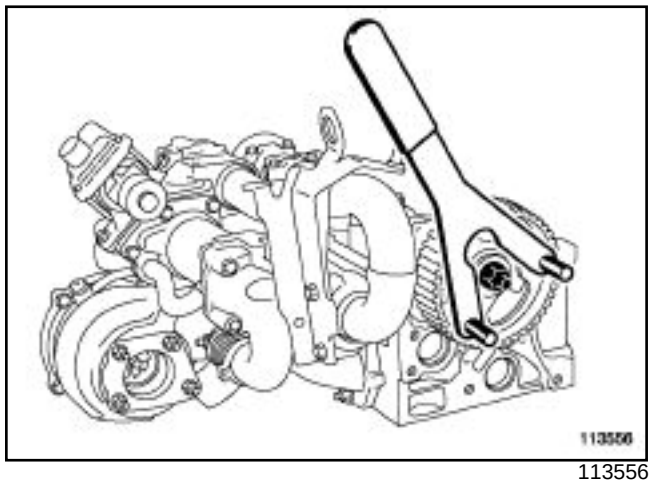

113556

Refit:

- the camshaft pulley hub,
- the camshaft pulley,
- the old camshaft pulley mounting nut.

Tighten to torque **the mounting nut for the camshaft pulley (15 ± 1.5 Nm)** , blocking the camshaft pulley with the **(Mot. 799-01)** .

Check and adjust the valve clearance following the procedure below.

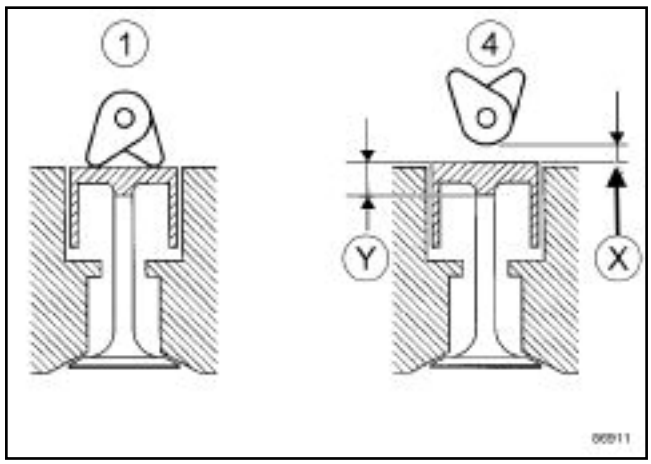

86911

Position the cylinder valves (**1**) in the end of exhaust stroke, beginning of inlet stroke position.

Measure the valve clearance (**X**) of the cylinder (**4**) using a set of shims:

- inlet valve clearance **0.20 mm** ,
- exhaust valve clearance **0.40 mm** ,

Note the clearance values.

Repeat the above operations on the other cylinders:

- position cylinder No. **3** at an angle and measure the clearance of cylinder No. **2** ,

K9K, and 732 or 764

- position cylinder No. **4** at an angle and measure the clearance of cylinder No. **1** ,
- position cylinder No. **2** at an angle and measure the clearance of cylinder No. **3** ,

Compare the values noted with the specified values.

Remove:

- the nut from the camshaft pulley,
- the camshaft pulley,
- the camshaft pulley hub,
- the camshaft bearing caps,
- the camshaft,
- the pushrod(s) which are outside of permitted tolerance values, noting their original position.

Undertake the following installation to determine the class of thickness of the valve pushrod.

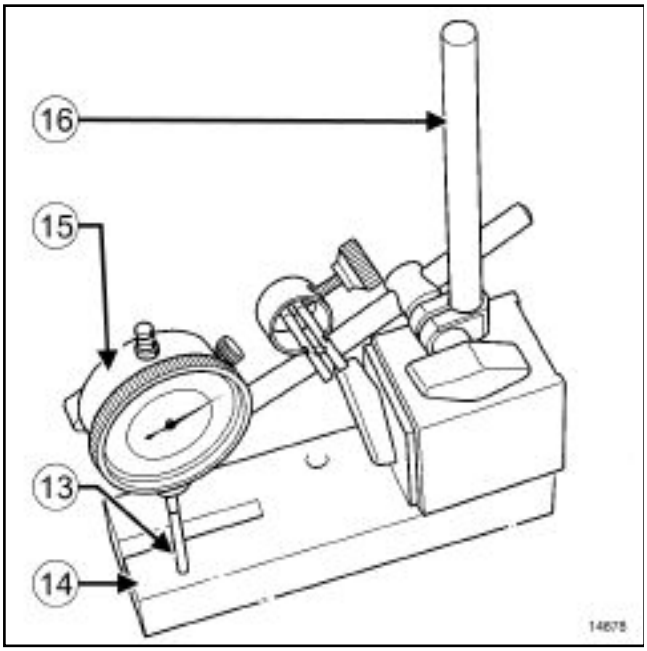

14678

Screw the extension piece (**13**) of the **(Mot. 856-02)** to a dial gauge (**15**) .

Fix the dial gauge (**15**) to a magnetic holder (**16**) .

Mount the dial gauge-magnetic holder assembly on the plate (**14**) of the **(Mot. 252-01)** .

Calibrate the dial gauge.

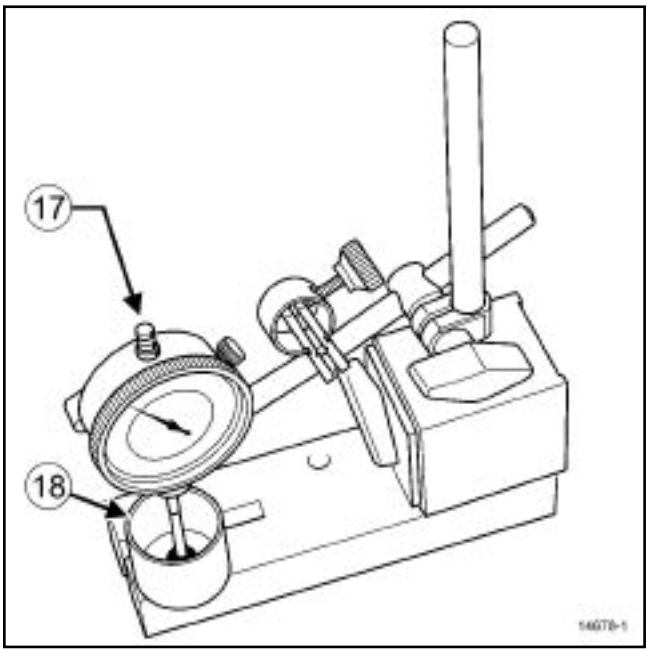

14678-1

Lift the top piece (**17**) of the dial gauge (without changing the position of the dial gauge-magnetic holder assembly).

Mount the valve pushrod (**18**) to be measured on the plate of the **(Mot. 252-01)** .

Take the measurement ***(Y)*** .

Repeat the preceding operations for the other valve pushrods to be measured.

Fit the new valve pushrod(s) in the cylinder head.

Check that the camshaft pulley mounting stud has not come loose. If so, the stud must be replaced following the procedure described below.

Place the camshaft in a vice fitted with a clamping jaw.

K9K, and 732 or 764

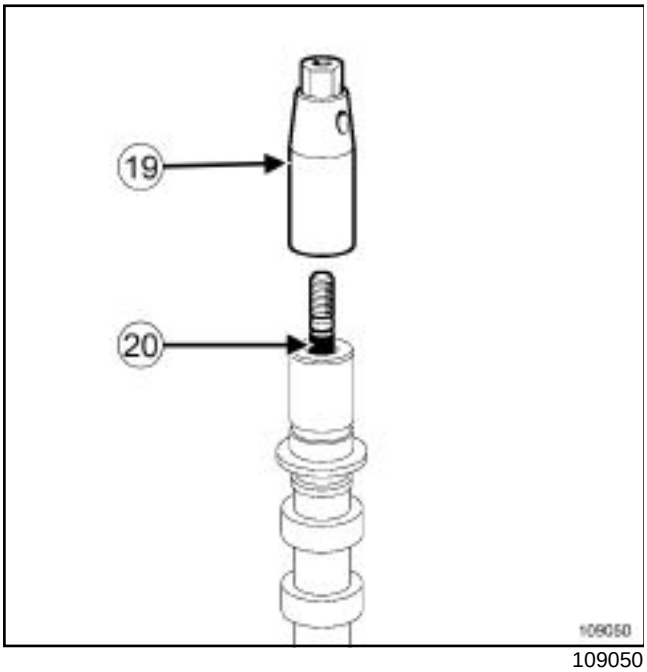

109050

Remove the piston rings using a roller-type stud removal tool (**19**) .

Clean the threaded hole of the camshaft carefully to prevent foreign bodies from entering the latter.

Fit the new stud on the camshaft (precoated section ***(20)*** on the camshaft side).

Tighten to torque **the camshaft pulley mounting stud (12 ± 2 Nm)** using a roller-type stud removal tool ***(19)*** .

Oil the top of the valve pushrods and the camshaft bearings with engine oil.

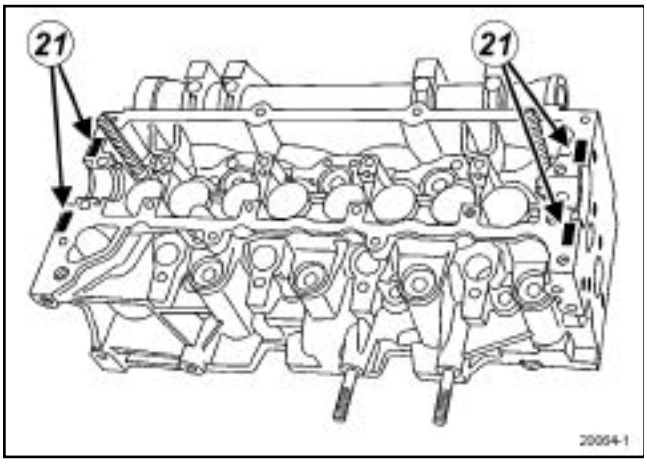

20064-1

Degrease the surfaces of the camshaft bearing gaskets nos. 1 and 6 (**21**) using degreaser.

Apply four beads of **LOCTITE 518** of a width of **1 mm** to camshaft bearings nos. 1 and 6 (**21**) .

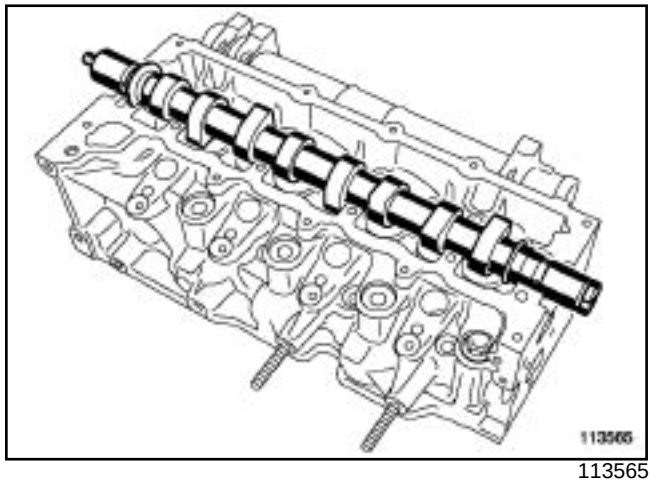

113565

Refit the camshaft.

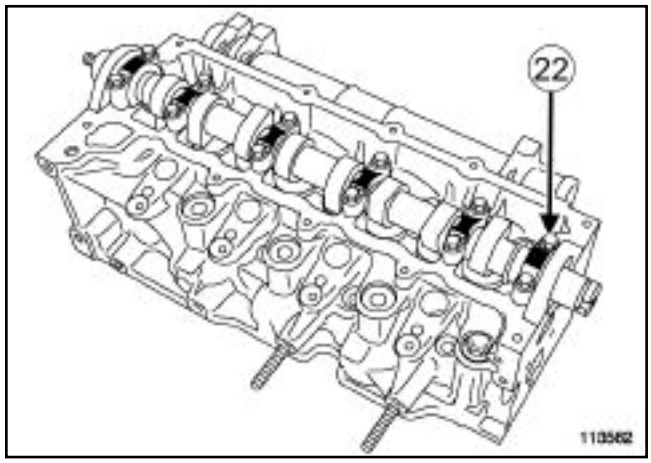

113562

Refit the camshaft bearing caps (observing their original positions, bearing No. 1 (**22**) engine flywheel end).

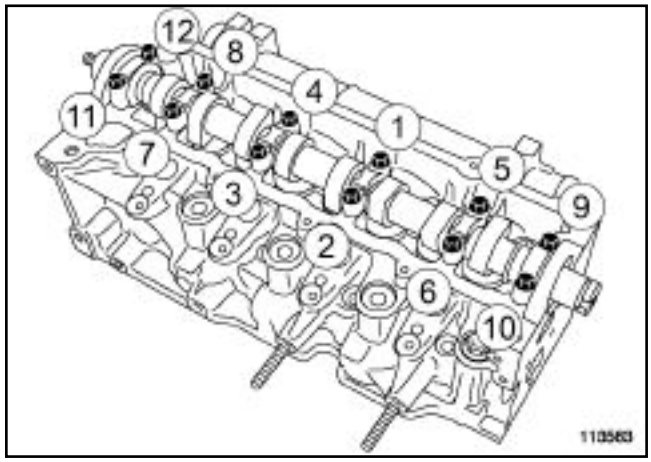

113563

Tighten to torque and in order the **crankshaft bearing cap mounting bolts (11 ± 1.1 Nm)** .

K9K, and 732 or 764

Apply degreaser to:

- the end of the camshaft at the timing end,
- the housing on the cylinder head of the camshaft gasket.

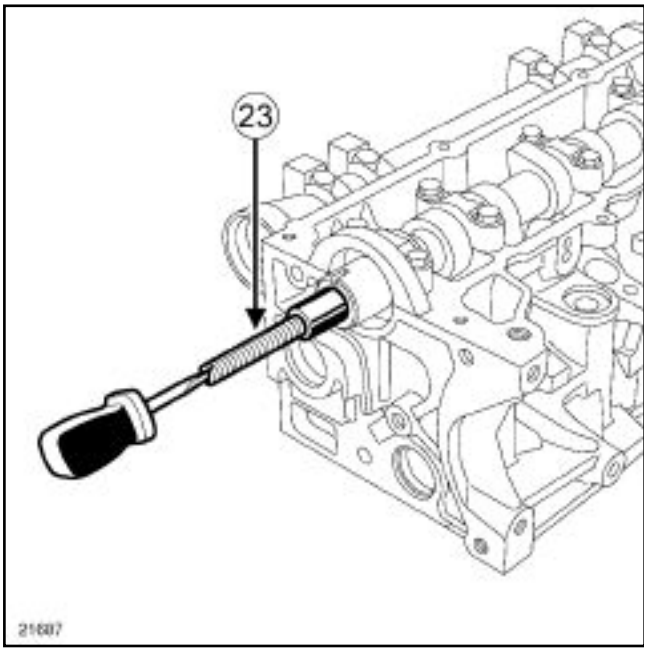

21687

Screw the shoulder stud (**23**) of the **(Mot. 1632)** onto the mounting stud of the camshaft pulley.

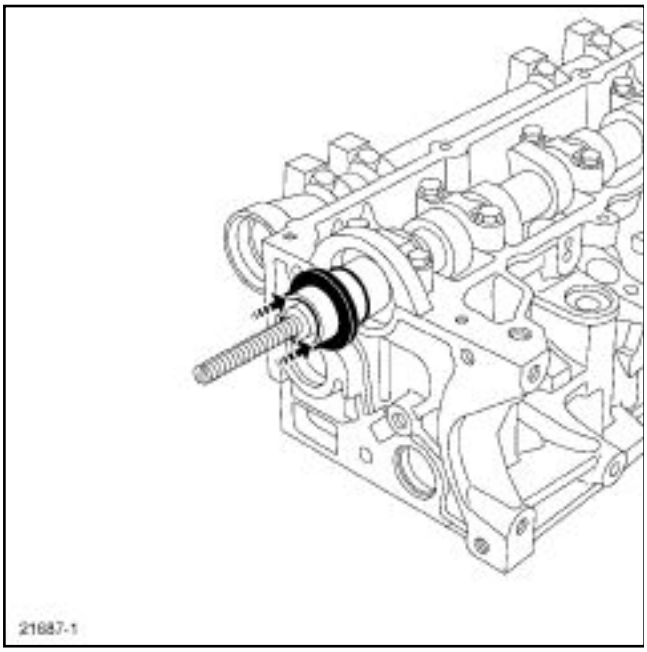

21687-1

Refit the camshaft gasket.

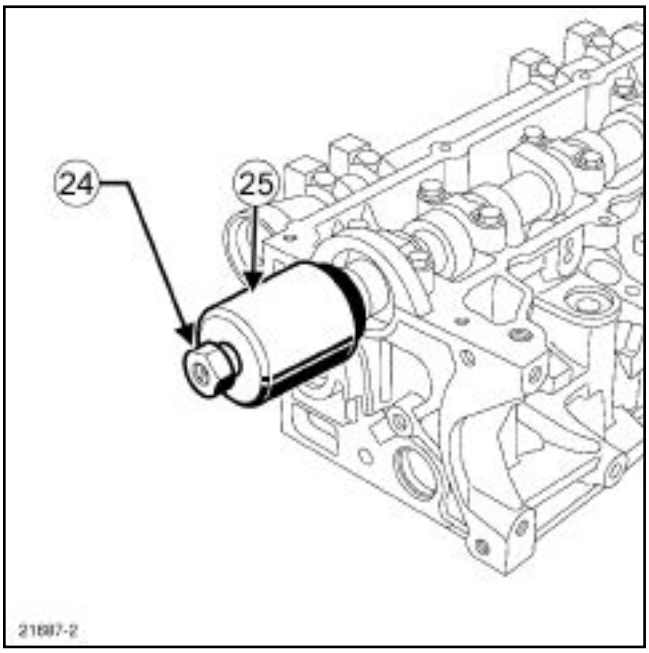

21687-2

Position the cover (**25**) and collar nut (**24**) of the tool **(Mot. 1632)** .

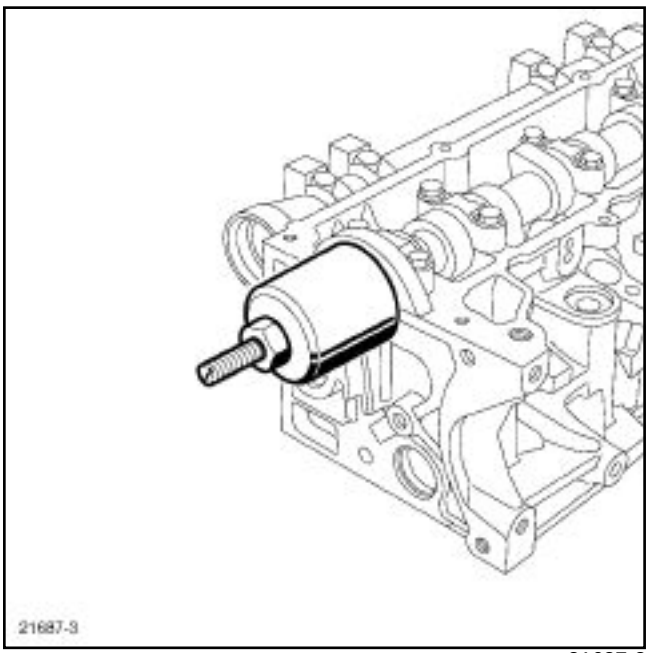

21687-3

Screw on the collar nut until the cover touches the cylinder head.

Remove:

- the collar nut,
- the cap,
- the shoulder stud.

Using degreaser, degrease the surfaces of the exhaust manifold and cylinder head gaskets at the exhaust end.

K9K, and 732 or 764

Refit:

- a new turbocharger-exhaust manifold gasket,
- the exhaust manifold,
- the exhaust manifold mounting nuts.

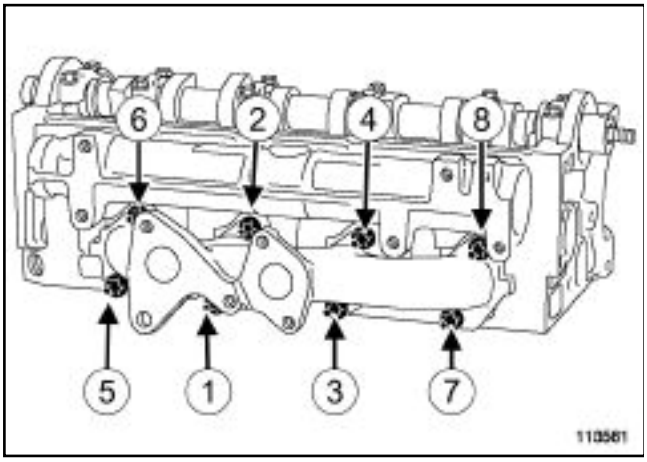

113561

Tighten to torque and in order the **exhaust manifold mounting nuts (26 ± 2.6 Nm)** .

Using degreaser, degrease the surfaces of the exhaust manifold (where the turbocharger enters) and the turbocharger gaskets.

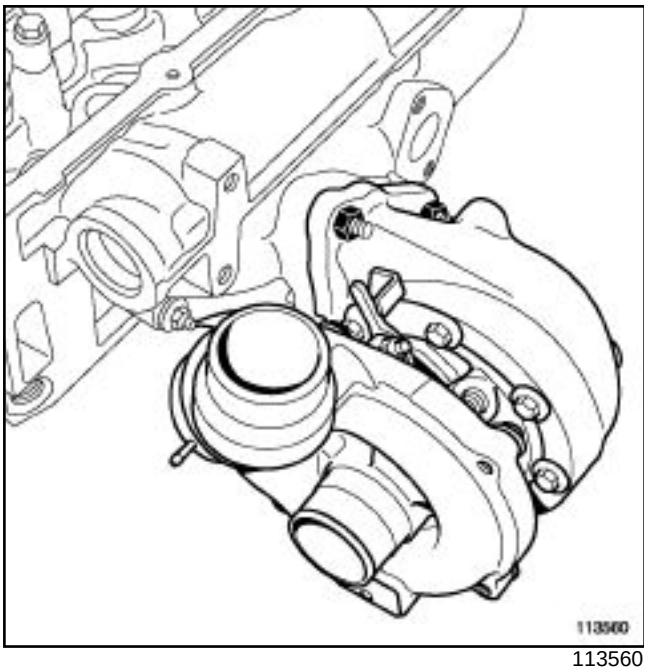

113560

Refit:

- the new turbocharger gaskets,
- the turbocharger.
- the turbocharger mounting nuts

Tighten to torque the **turbocharger mounting nuts (26 ± 2.6 Nm)** .

Put a little engine oil from an oil can in the oil circuit of the turbocharger.

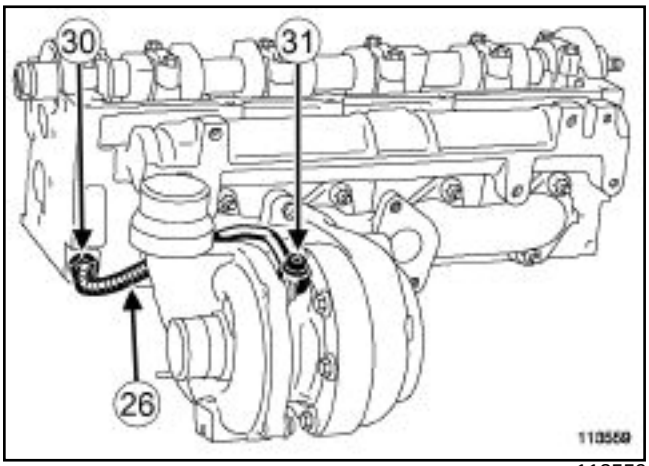

113559

Refit the turbocharger oil supply pipe (**26**) .

Screw:

- the cylinder head nut (**30**) ,
- the bolt (**31**) on the turbocharger.

Tighten to torque:

- **the turbocharger oil supply pipe mounting bolt (turbocharger end) (23 ± 2.3 Nm)** ,
- **the turbocharger oil supply pipe mounting nut (cylinder head end) (35 ± 3.5 Nm)** .

K9K, and 732 or 764

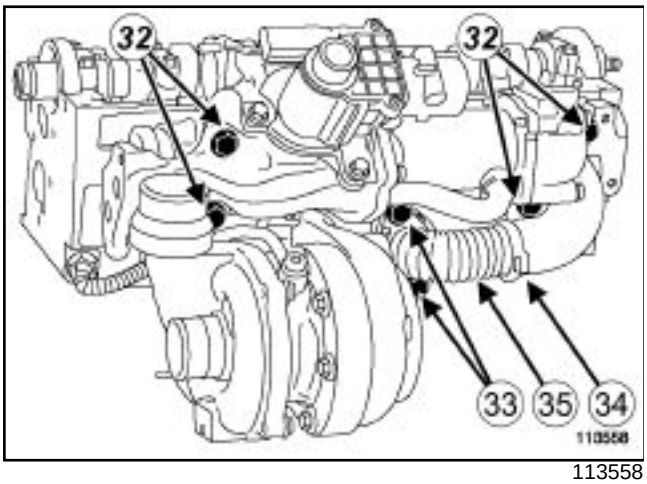

113558

Refit:

- the EGR valve-exchanger assembly,
- the mounting bolts (**32**) (without tightening them) of the EGR valve-exchanger.

Tighten to torque the **EGR valve-exchanger mounting bolts (25 ± 2.5 Nm)** . (**32**)

Refit:

- the new exhaust gas recirculation pipe (**35**) fitted with its new snap-on clip (**34**) ,
- the mounting bolts (**33**) of the exhaust gas recirculation pipe.

Adjust the exhaust gas recirculation pipe in relation to the cooler support.

Lock the snap-on clip of the exhaust gas recirculation pipe using the **(Mot. 1567)** .

Tighten to torque the **mounting bolts of the exhaust gas recirculation pipe (35 ± 3.5 Nm)** (**33**) .

Fit the new O-ring seals to the inlet pipe.

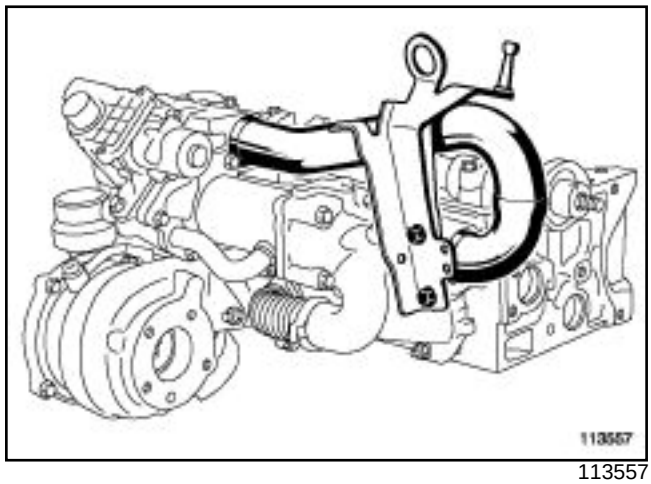
113557

Refit:

- the inlet duct,
- the engine lifting eye (timing end),
- the engine lifting eye mounting bolts.

Tighten to torque the **engine lifting eye mounting bolts (timing end) (21 ± 2.1 Nm)** .

Refit:

- the camshaft pulley hub,
- the new camshaft pulley hub mounting nut.

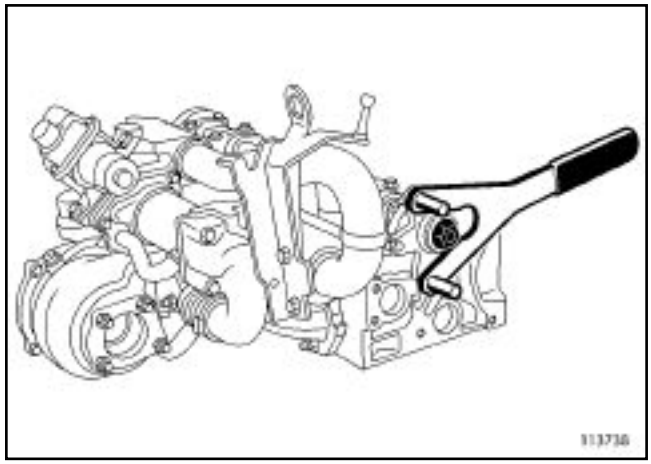
113738

Immobilise the hub using the **(Mot. 799-01)** .

Tighten to torque and angle the **camshaft pulley hub nut (30 ± 3 Nm + 86° ± 6°)** .

Refit the camshaft pulley (without tightening the mounting bolts).

Using degreaser, degrease the surfaces of the seals where the vacuum pump enters, the cylinder head coolant outlet and the EGR exchanger cover.

K9K, and 732 or 764

Refit new seals to the cylinder head coolant outlet and the EGR exchanger cover.

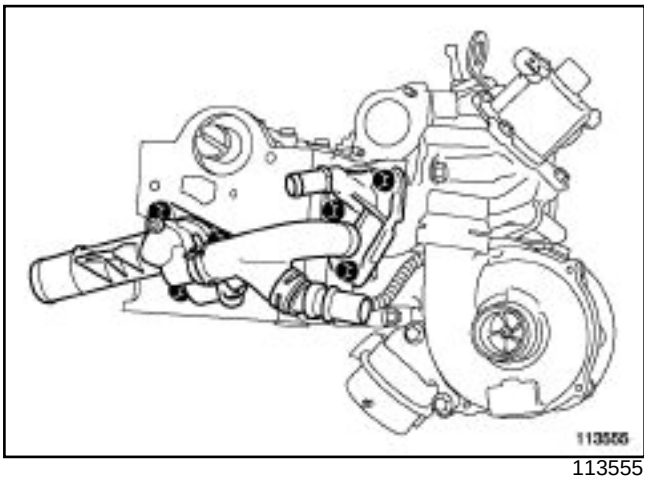

113555

Refit:

- the cylinder head coolant outlet unit-EGR exchanger cover assembly,
- the cylinder head coolant outlet unit mounting bolts,
- the EGR exchanger cover mounting bolts.

Tighten to torque:

- **the cylinder head coolant outlet unit bolt (11 ± 1.1 Nm)** ,
- **the EGR exchanger cover mounting bolt (12 ± 1.2 Nm)** .

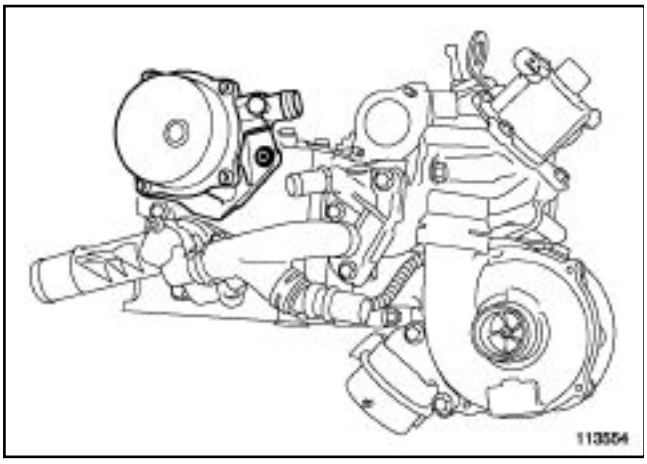

113554

Refit:

- the vacuum pump,
- vacuum pump mounting bolts,

Tighten to torque the **vacuum pump mounting bolts (21 ± 2.1 Nm)** .

Refit the heater plugs.

Tighten to torque **the heater plugs (15 ± 1.5 Nm)** using a hinged wrench.

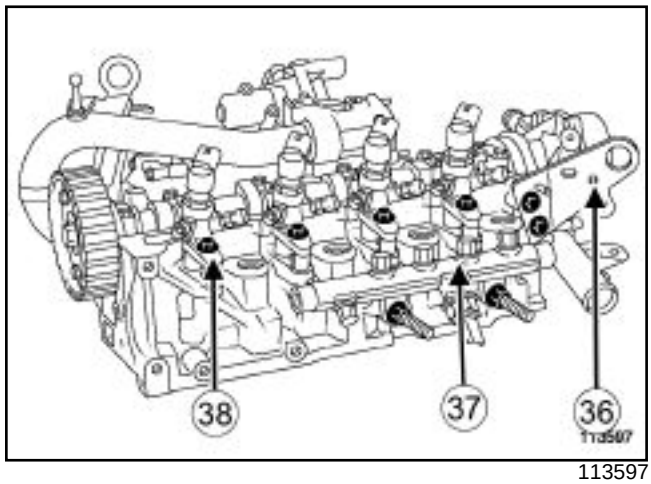

113597

Refit:

- engine lifting eye (flywheel end) (**36**) ,
- the injector rail **(without tightening the nuts)** ,
- the new heat protection washers,
- the injectors (observing their positions),
- the injector bracket spacer,
- the injector brackets,
- the injector bracket mounting bolts (**38**) .

Tighten to torque **the injector bracket mounting bolts (30 ± 3 Nm)** .

Note:

Do not lubricate high-pressure pipes **supplied without an applicator; these pipes are self-lubricating.**

K9K, and 732 or 764

20960

Lightly lubricate the nut threads with oil from the applicator supplied with the new part, taking care not to insert it in the pipe.

Insert the high-pressure pipe olive in the injector high-pressure inlet taper.

Insert the high-pressure pipe olive in the rail high-pressure outlet taper.

Finger tighten the high-pressure pipe nuts, starting with the one located on the injector end.

Lightly tighten the nuts of the high-pressure pipes.

Tighten to torque the **injector rail mounting nuts (28 ± 2.8 Nm)** .

Note:

Completely tighten one high-pressure pipe before moving to the next one.

Tighten to torque and in order (according to the part no. of the pipe) **the rail-injectors high-pressure pipe nuts (24 ± 2.4 or 38 ± 3.8 Nm)** :

- injector rail side, using the **(Mot. 1566)** or a crow foot wrench,
- injector side using the **(Mot. 1566)** or with a wrench for high-pressure pipes.

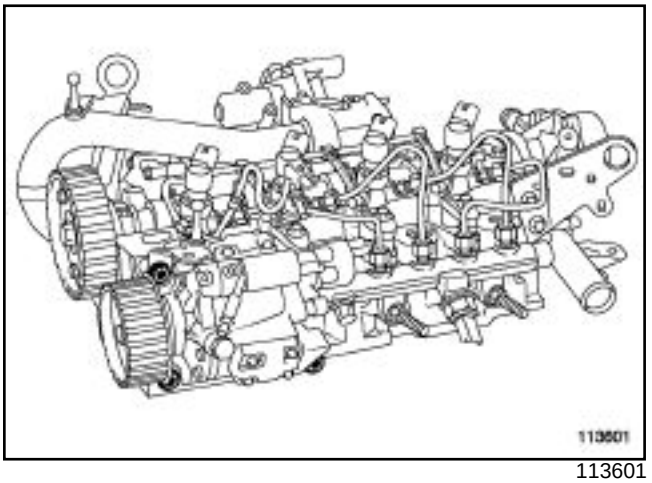

113601

Refit:

- the high-pressure pump,
- the mounting bolts of the high-pressure pump

Tighten to torque the **high-pressure pump mounting bolts (21 ± 2.1 Nm)** .

Note:

Do not lubricate high-pressure pipes **supplied without an applicator; these pipes are self-lubricating.**

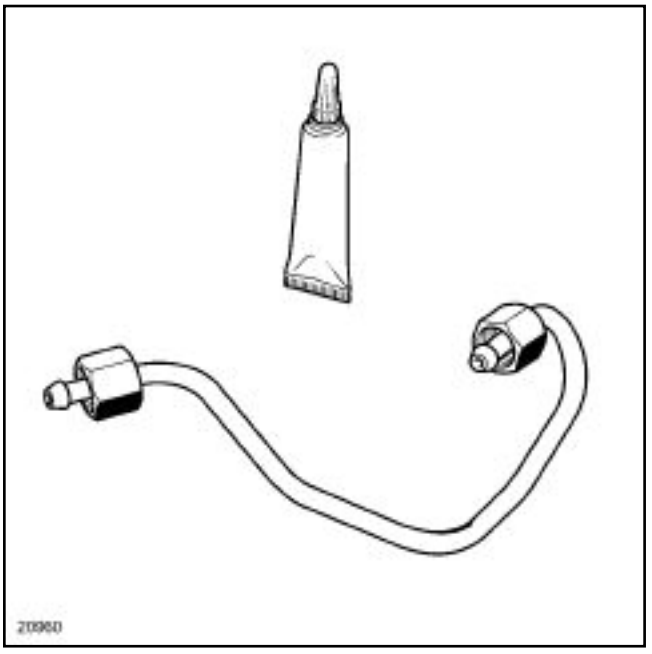

20960

Lightly lubricate the nut threads with oil from the applicator supplied with the new part, taking care not to insert it in the pipe.

Position the high-pressure pipe olive in the high-pressure spherical injector rail inlet.

K9K, and 732 or 764

Insert the high-pressure pipe olive in the high-pressure pump high-pressure outlet taper.

Finger tighten the high-pressure pipe nuts, starting with the one at the injector rail side.

Lightly tighten the nuts of the high-pressure pipes.

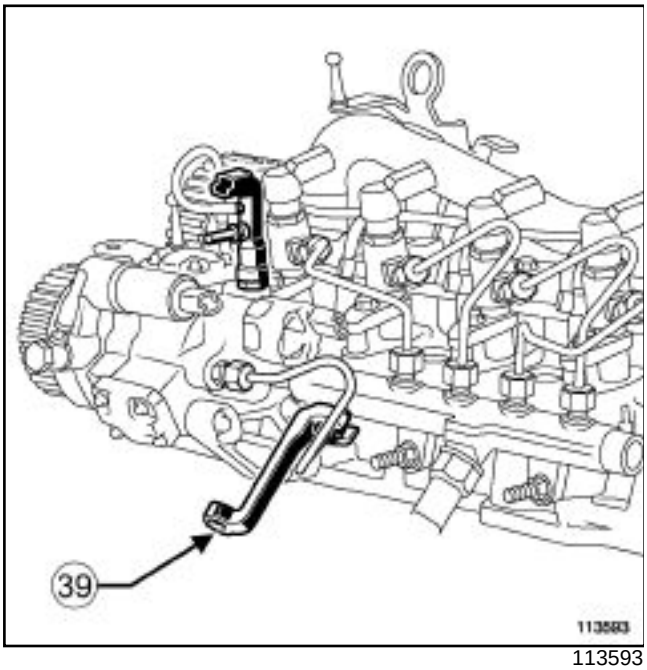

113593

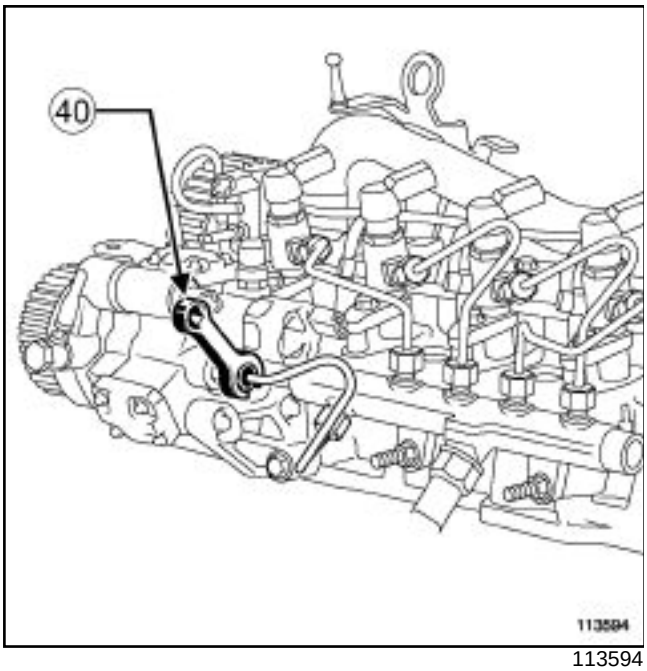

113594

Tighten to torque and in order (according to the part no. of the pipe) **the rail-injectors high-pressure pipe nuts (24 ± 2.4 or 38 ± 3.8 Nm)** :

- the injector rail side using the **(Mot. 1566)** (**39**) ,
- the high-pressure pump side using the **(Mot. 1746)** (**40**) .

Refit the fuel return pipe.

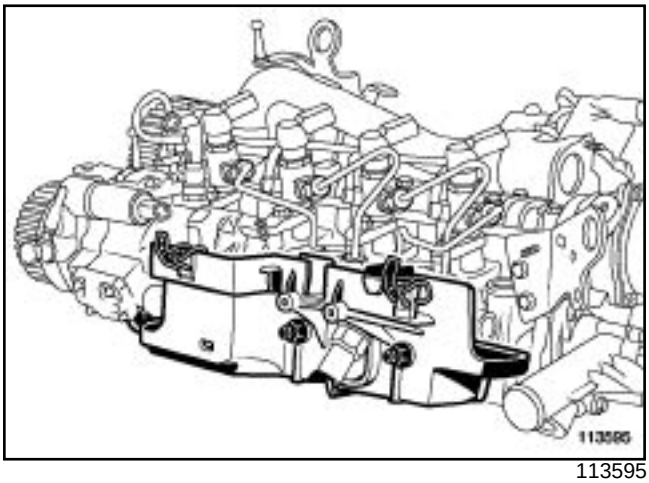

113595

Refit:

- the high-pressure protector,
- the mounting bolt and nuts of the high-pressure protector,

Tighten to torque the **high-pressure protector bolts and nuts (21 ± 2.1 Nm)** .

K9K, and 260 or 270 or 272 or 700 or 702 or 704 or 706 or 710 or 722 or 750 or 752 or 790

Special tooling required	
Mot. 582-01	Flywheel locking tool.
Mot. 1677	Flywheel locking tool.
Emb. 1596	24mm socket for removing/refitting clutch master cylinder.
Mot. 1329	Oil filter removing tool (76 mm diameter).

I - RECOMMENDATIONS FOR REPAIR

IMPORTANT
Wear protective gloves during every operation.

II - EQUIPMENT REQUIRED

- Wide, flat-blade screwdriver,
- Male torx socket.

III - STRIPPING THE CYLINDER BLOCK

1 - For engines fixed to the oil filter side

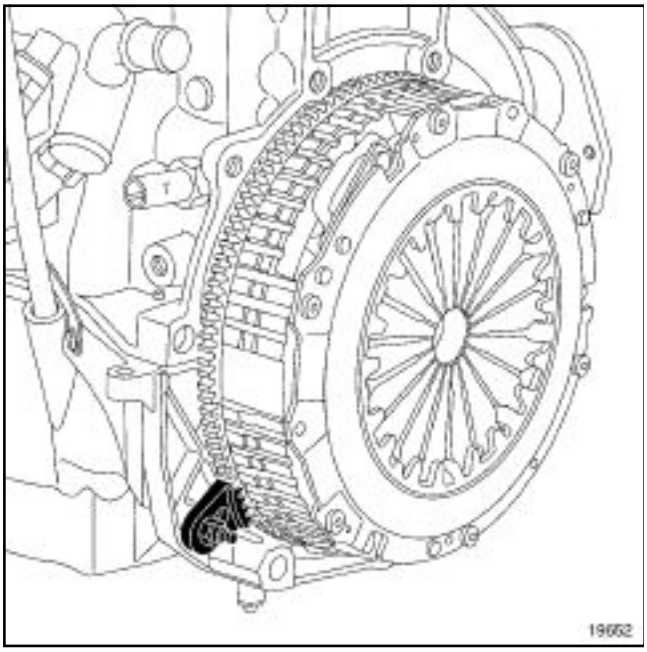

19652

Fit the engine flywheel lock **(Mot. 582-01)** or **(Mot. 1677)** .

Remove:

- the clutch mechanism mounting bolts,
- the clutch pressure plate,
- the clutch plate.

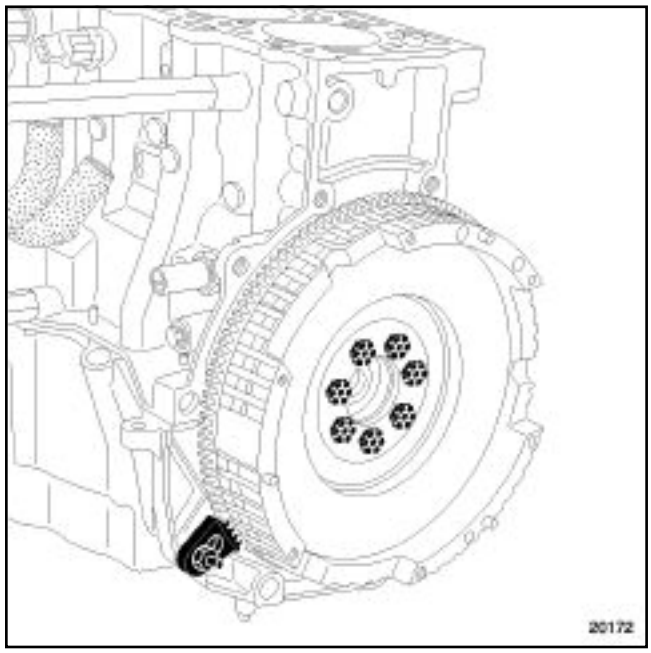

20172

Remove:

- the flywheel mounting bolts,
- the **(Mot. 582-01)** or **(Mot. 1677)** ,
- the flywheel.

K9K, and 260 or 270 or 272 or 700 or 702 or 704 or 706 or 710 or 722 or 750 or 752 or 790

2 - For engines fixed to the flywheel side

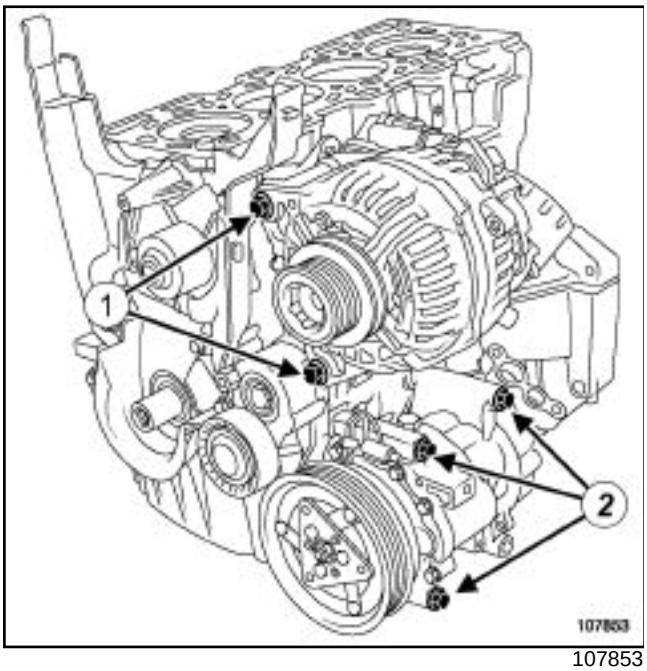

107853

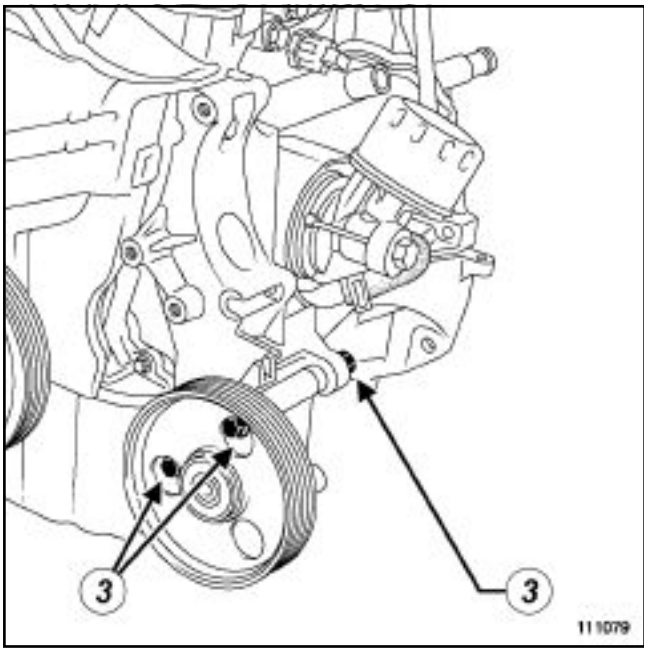

111079

Remove:

- the alternator mounting bolts (**1**) ,
- the alternator using a wide, flat-blade screwdriver (if necessary),
- the mounting bolts (**2**) of the air conditioning compressor (if fitted),
- the air conditioning compressor,
- the mounting bolts (**3**) of the power assisted steering pump or the dummy pulley (if fitted),
- the power assisted steering pump or the dummy pulley.

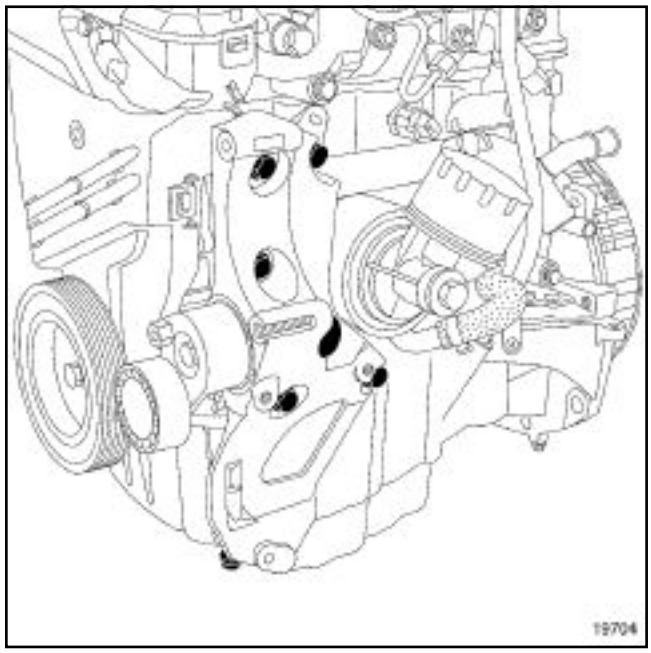

19704

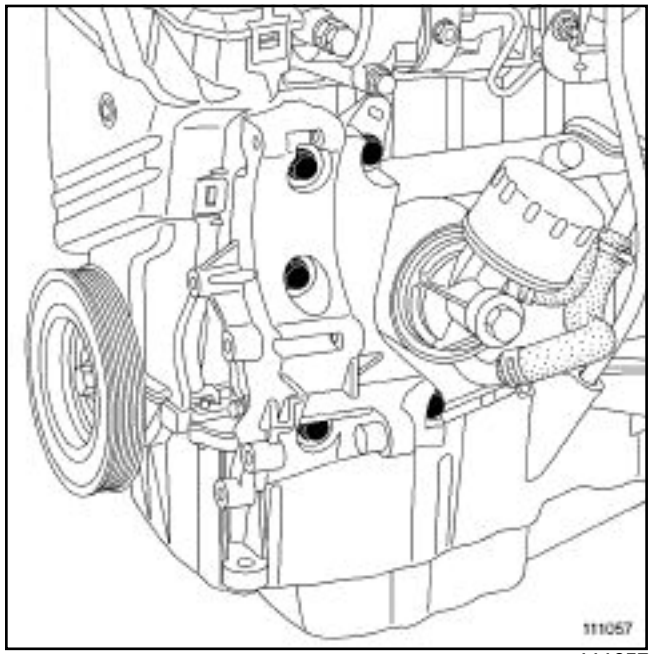

111057

Remove:

- the multifunction support mounting bolts,
- the multifunction support.

K9K, and 260 or 270 or 272 or 700 or 702 or 704 or 706 or 710 or 722 or 750 or 752 or 790

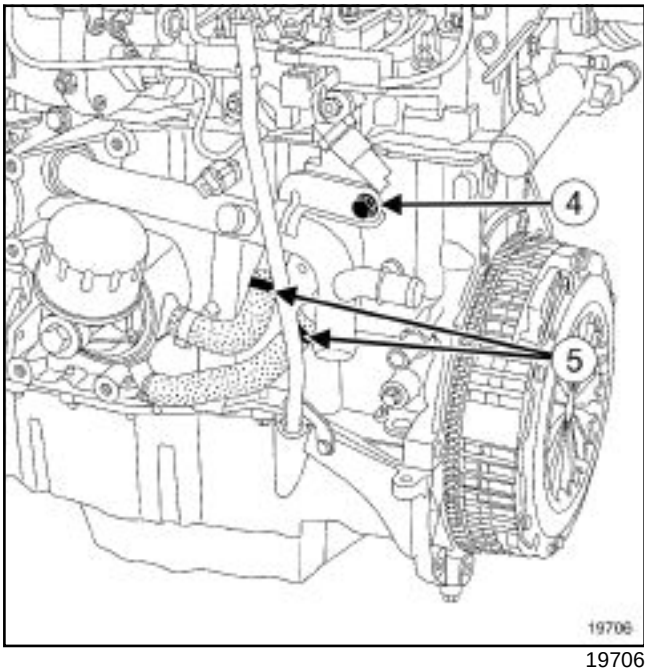

19706

Unclip the hose connections (**5**) of the coolant pump inlet pipe.

Remove:

- the mounting bolt (**4**) of the coolant pump inlet pipe,
- the coolant pump inlet pipe.

3 - For engines fixed to the oil filter side or the flywheel side

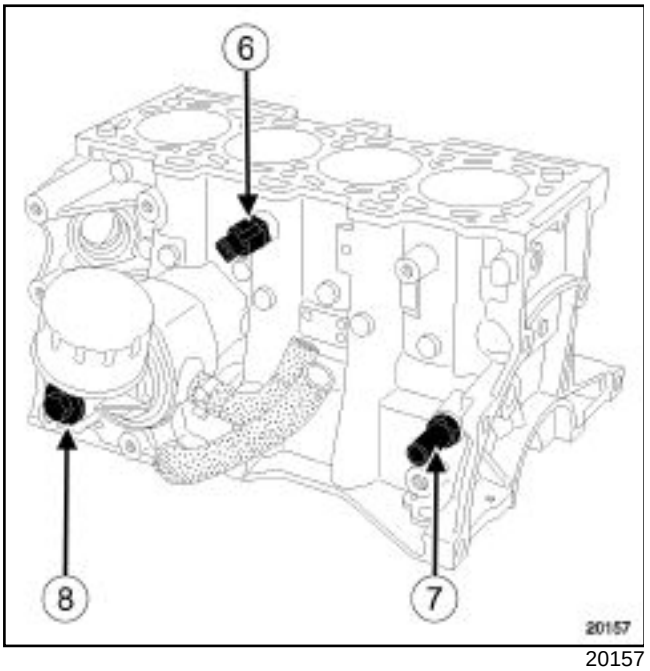

20157

Remove:

- the acceleration meter (**6**) using tool **(Emb. 1596)** ,
- the oil pressure sensor (**7**) ,
- the oil filter using the **(Mot. 1329)** ,
- the oil filter holder mounting bolt (**8**) ,

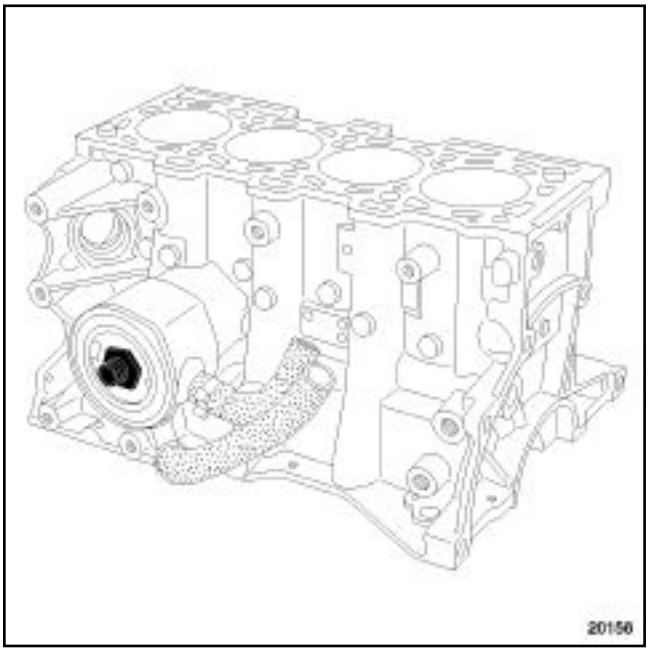

20156

Remove:

- the oil/coolant heat exchanger mounting bolt,
- the oil/coolant heat exchanger.

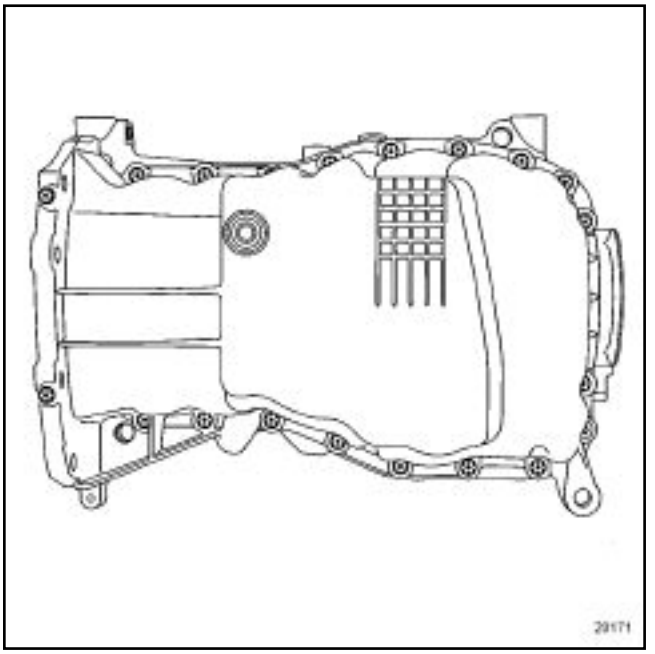

20171

Remove:

- the oil sump mounting bolts.
- the engine oil sump.

K9K, and 260 or 270 or 272 or 700 or 702 or 704 or 706 or 710 or 722 or 750 or 752 or 790

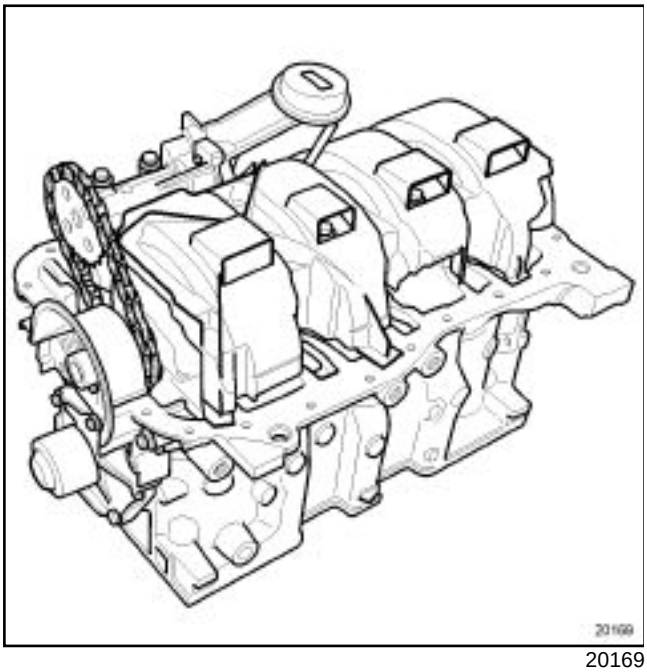

20169

Remove the oil splash plate.

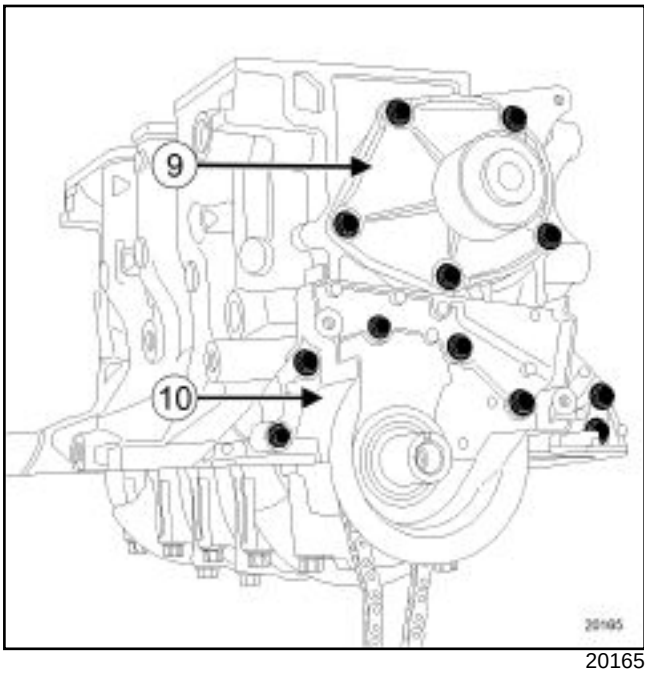

20165

Remove:

- the coolant pump mounting bolts (**9**) ,
- the coolant pump,
- the crankshaft nose closure panel mounting bolt (**10**) ,
- the crankshaft nose closure panel

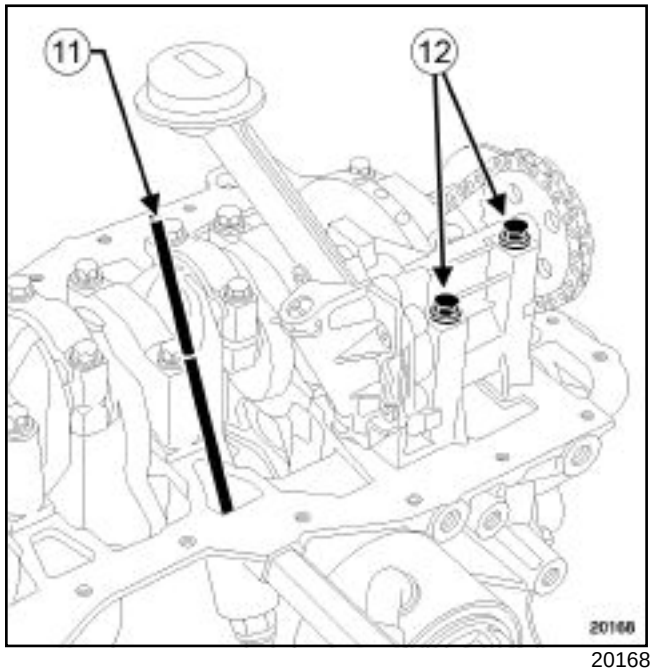

20168

Remove:

- the oil level sensor (**11**) ,
- the oil pump mounting bolts (**12**) ,
- the oil pump.

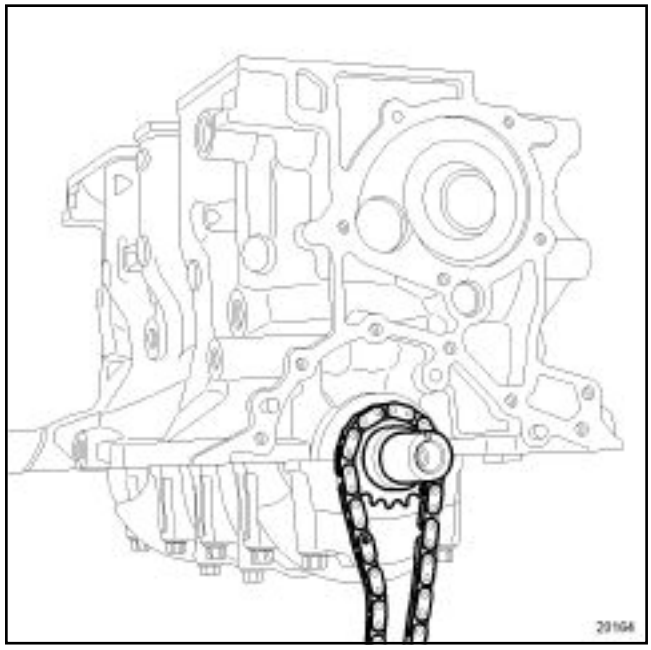

20164

Remove:

- the oil pump chain,
- the oil pump drive sprocket.

K9K, and 274 or 276 or 712 or 714 or 716 or 718 or 724 or 728 or 729 or 760 or 762 or 766 or 768

Special tooling required	
Mot. 1677	Flywheel locking tool.
Mot. 1329	Oil filter removing tool (76 mm diameter).
Emb. 1596	24 mm socket for removing/refitting clutch master cylinder.

I - RECOMMENDATIONS FOR REPAIR

IMPORTANT
Wear protective gloves during every operation.

II - EQUIPMENT REQUIRED

- Wide, flat-blade screwdriver,
- Male torx socket.

III - STRIPPING THE CYLINDER BLOCK

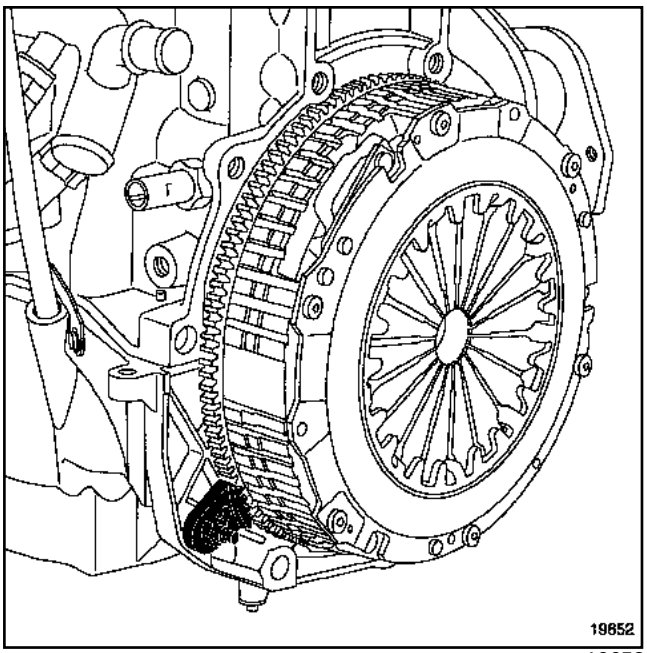

19652

Fit the engine flywheel lock **(Mot. 1677)** .

Remove:

- the clutch mechanism mounting bolts,
- the clutch pressure plate,
- the clutch plate.

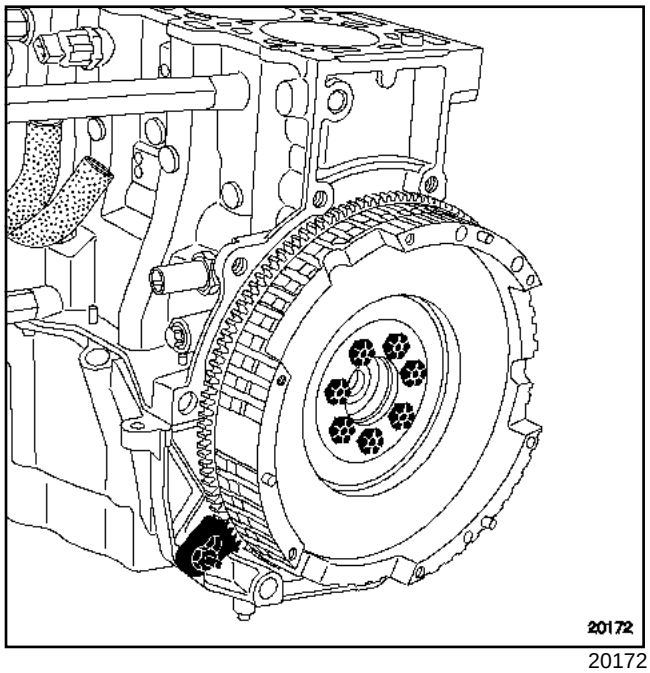

20172

Remove:

- the flywheel mounting bolts,
- **(Mot. 1677)** ,
- the flywheel.

K9K, and 274 or 276 or 712 or 714 or 716 or 718 or 724 or 728 or 729 or 760 or 762 or 766 or 768

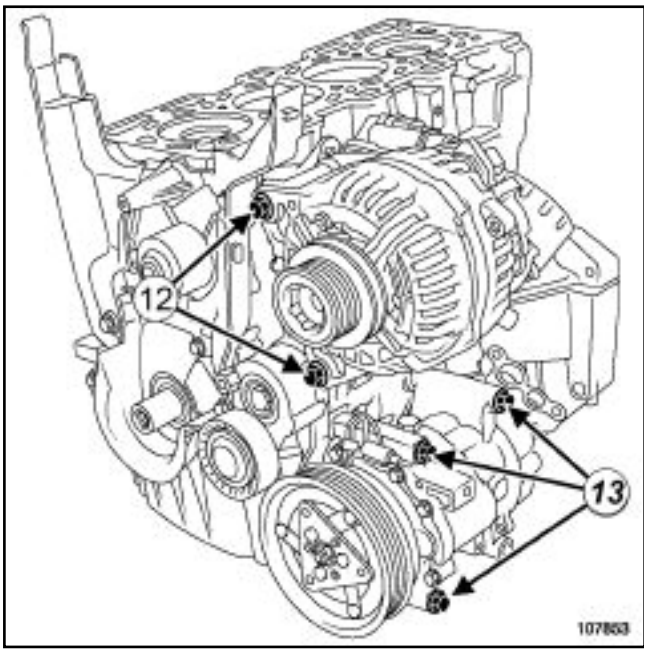

107853

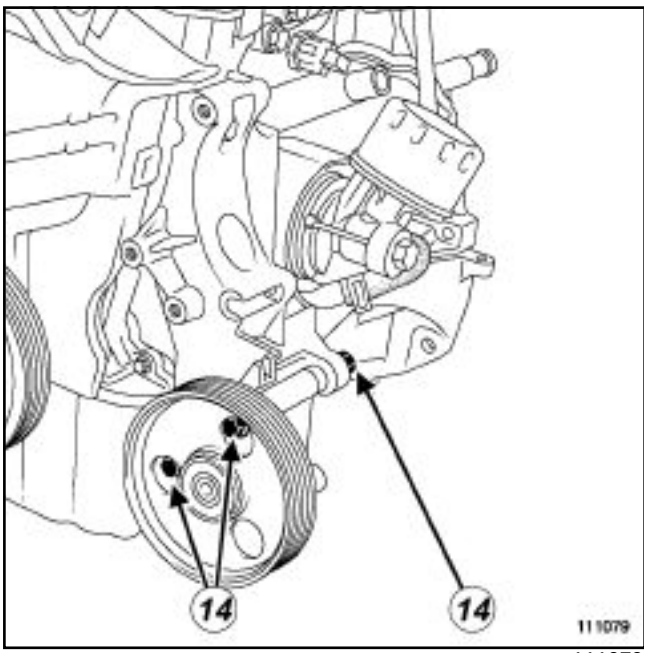

111079

Remove:

- the alternator mounting bolts (**12**) ,
- the alternator using a wide flat-blade screwdriver (if necessary),
- the mounting bolts (**13**) of the air conditioning compressor (if fitted),
- the air conditioning compressor,
- the mounting bolts (**14**) of the power assisted steering pump or the dummy pulley if fitted,
- the power assisted steering pump or the dummy pulley.

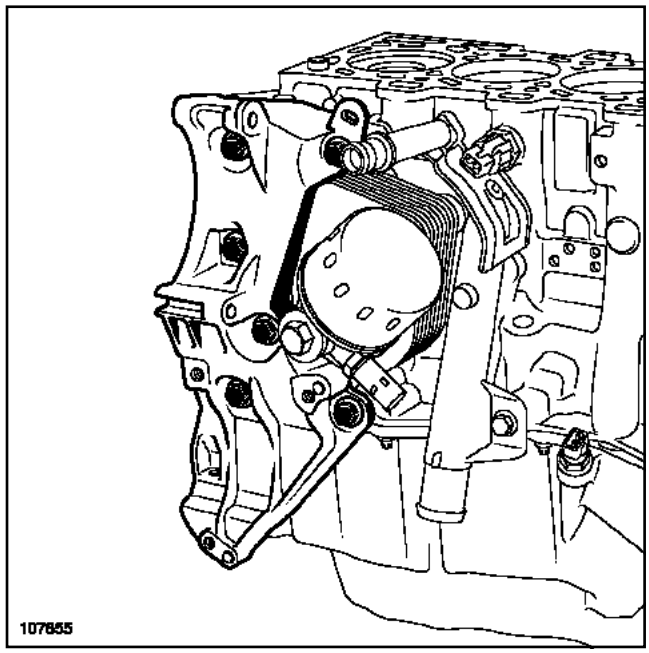

107855

Remove:

- the multifunction support mounting bolts,
- the multifunction support.

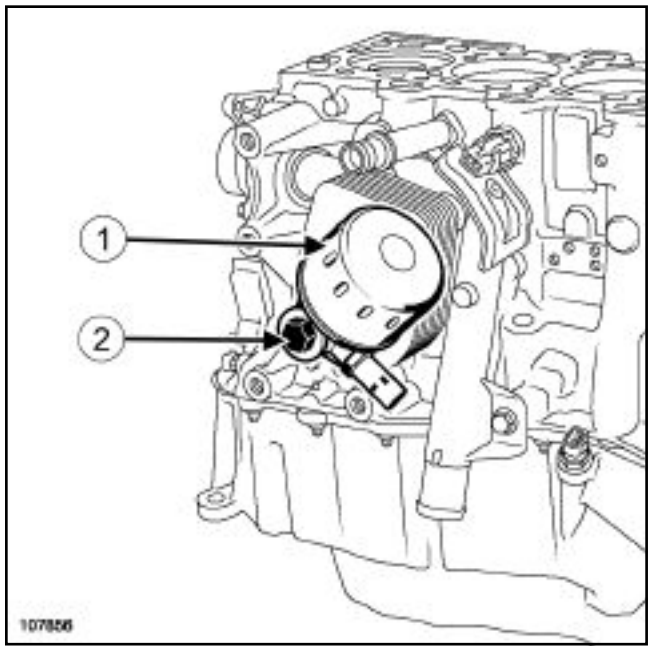

107856

Remove:

- the oil filter (**1**) using the **(Mot. 1329)** ,
- the oil filter holder mounting bolt (**2**) ,
- the oil filter holder.

K9K, and 274 or 276 or 712 or 714 or 716 or 718 or 724 or 728 or 729 or 760 or 762 or 766 or 768

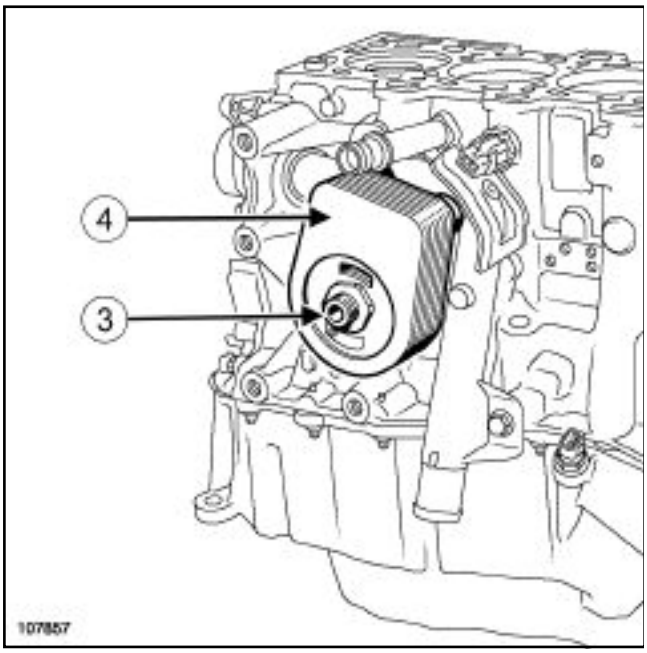

107857

Remove:

- the mounting bolt (**3**) from the oil/coolant heat exchanger,
- the oil/coolant heat exchanger (**4**) .

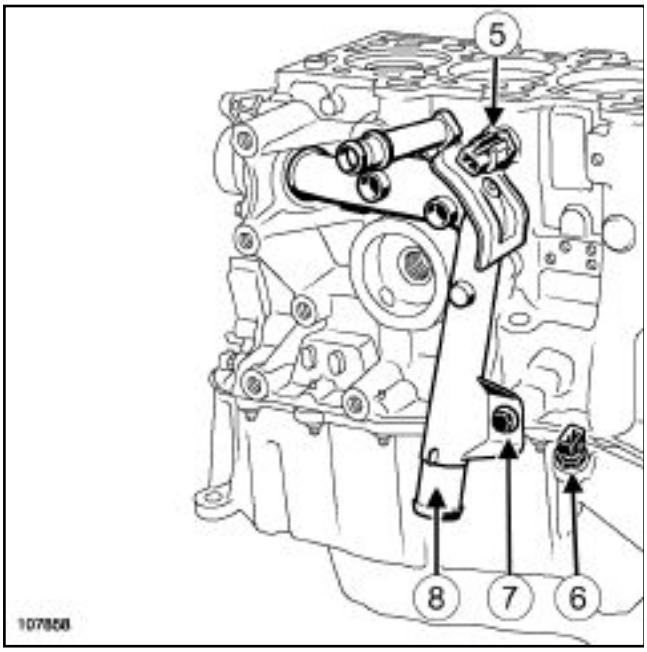

107858

Remove:

- the acceleration meter (**5**) using the **(Emb. 1596)** ,
- the oil level sensor (**6**) ,
- the mounting bolt (**7**) of the coolant pump inlet pipe,
- the coolant pump inlet pipe (**8**) .

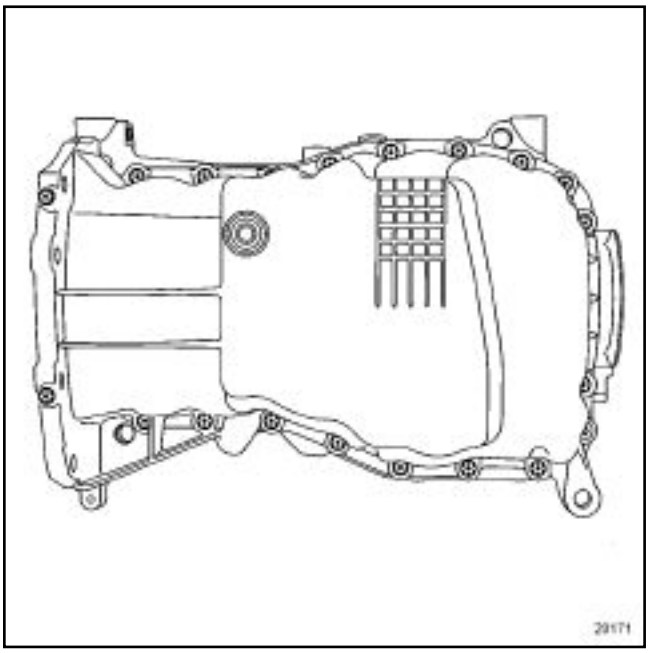

20171

Remove:

- the engine oil sump mounting bolts,
- the engine oil sump.

K9K, and 712 or 728

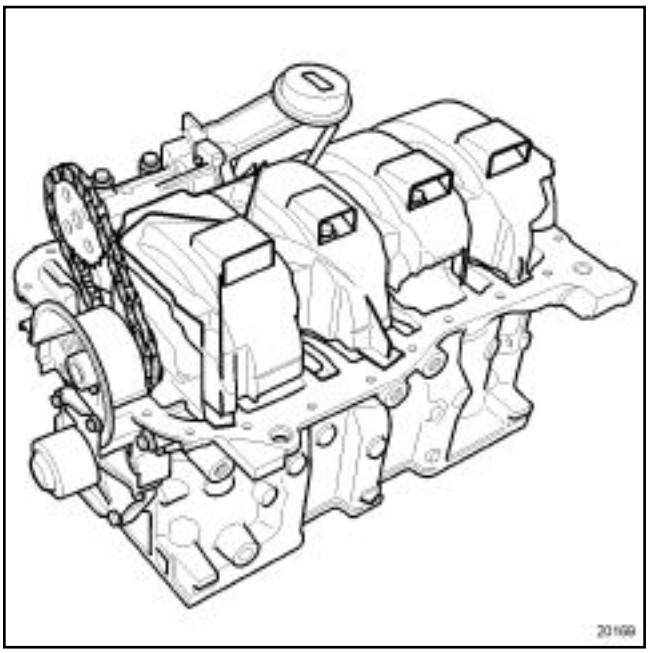

20169

Remove the oil splash plate.

K9K, and 274 or 276 or 712 or 714 or 716 or 718 or 724 or 728 or 729 or 760 or 762 or 766 or 768

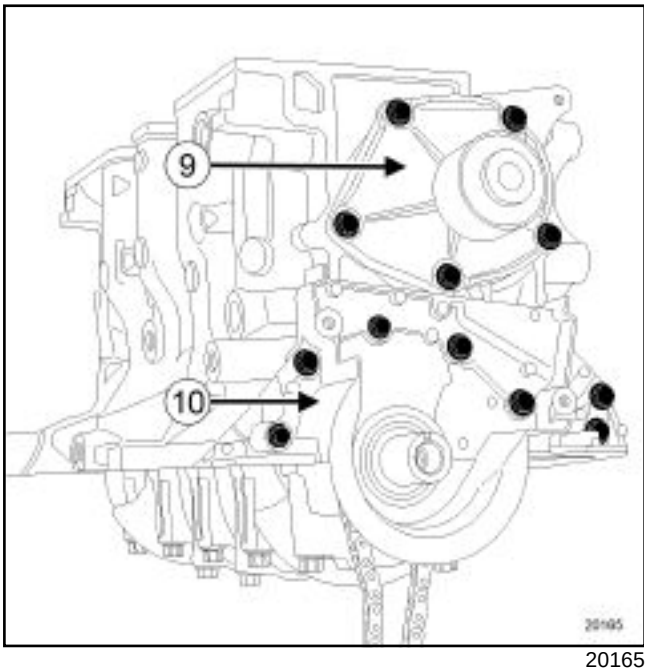

20165

Remove:

- the coolant pump mounting bolts (**9**) ,
- the coolant pump,
- the crankshaft nose closure panel mounting bolt (**10**) ,
- the crankshaft nose closure panel

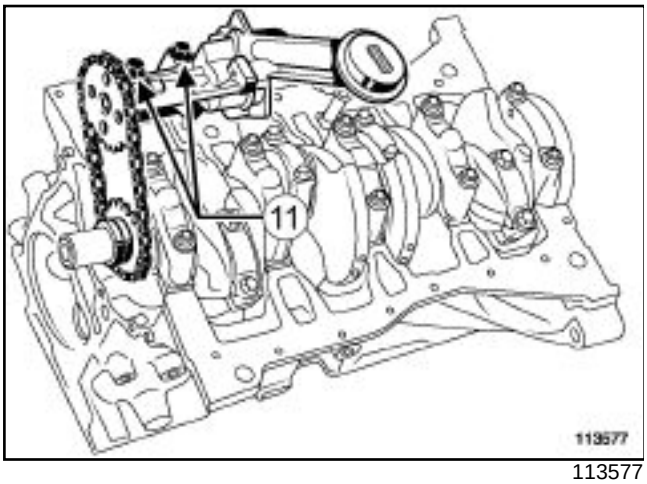

113577

Remove:

- the oil pump mounting bolts (**11**) ,
- the oil pump.

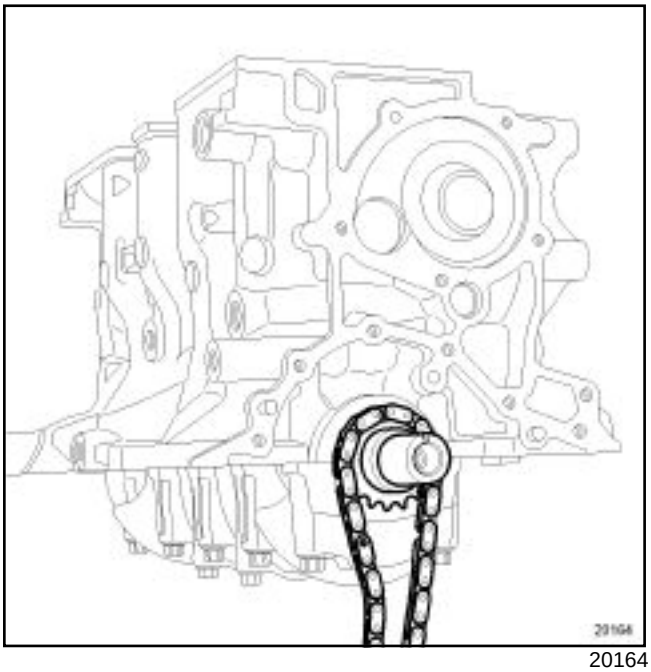

20164

Remove:

- the oil pump chain,
- the oil pump drive sprocket.

K9K, and 732 or 764

Special tooling required	
Mot. 1329	Oil filter removing tool (76 mm diameter).
Mot. 1677	Flywheel locking tool.

I - RECOMMENDATIONS FOR REPAIR

IMPORTANT
Wear protective gloves during every operation.

II - EQUIPMENT REQUIRED

- Wide, flat-blade screwdriver,
- Male torx socket.

III - STRIPPING THE CYLINDER BLOCK

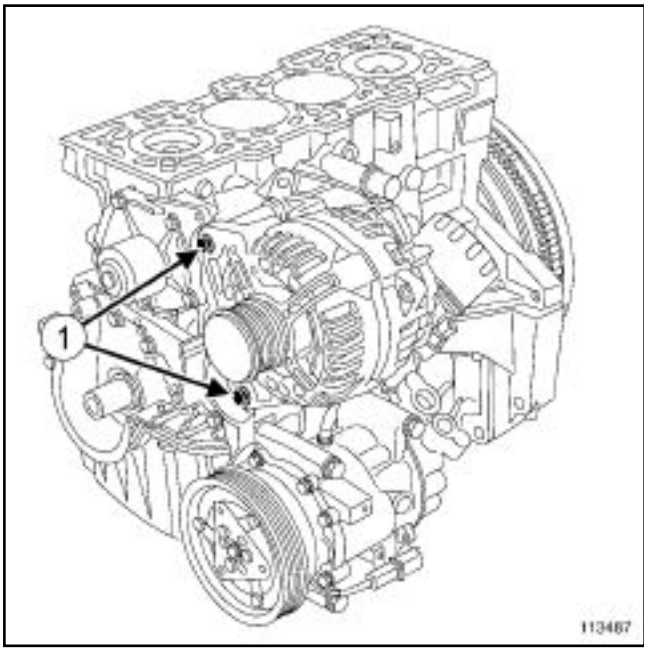

113487

Remove:

- the alternator mounting bolts (**1**) ,
- the alternator using a wide flat-blade screwdriver (if necessary),

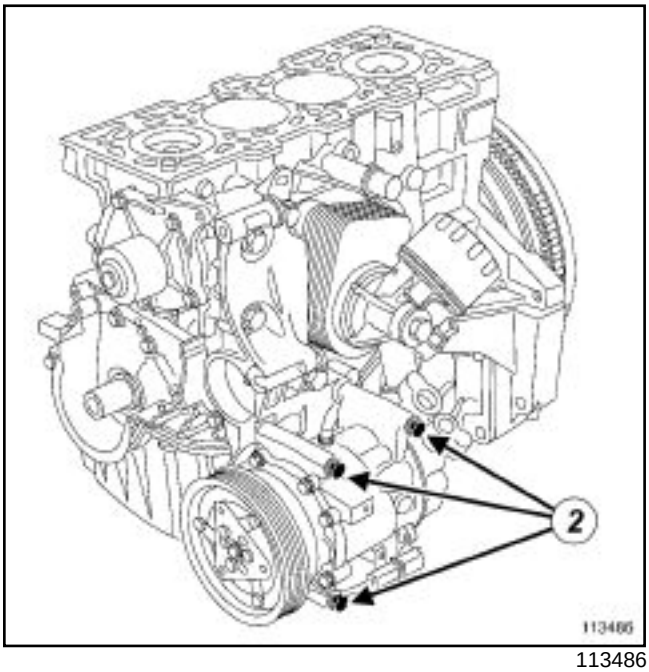

113486

Remove:

- the air conditioning compressor mounting bolts,
- the air conditioning compressor.

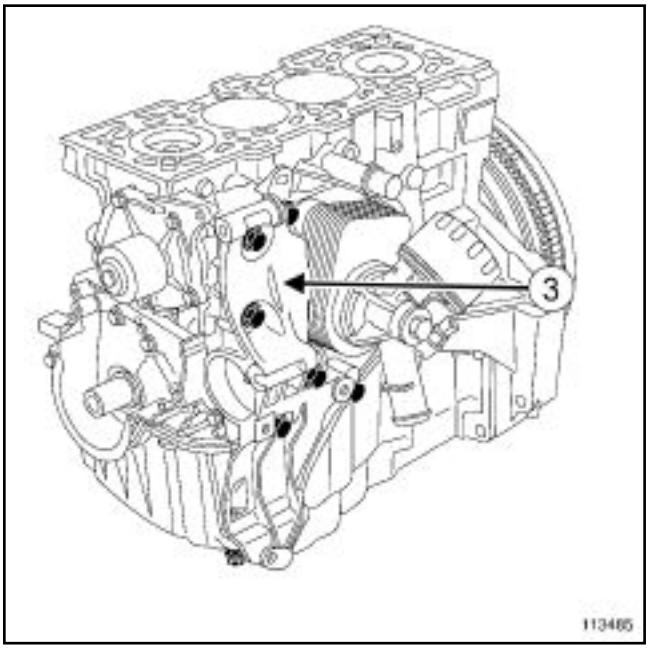

113485

Remove:

- the multifunction support mounting bolts,
- the multifunction support (**3**) .

K9K, and 732 or 764

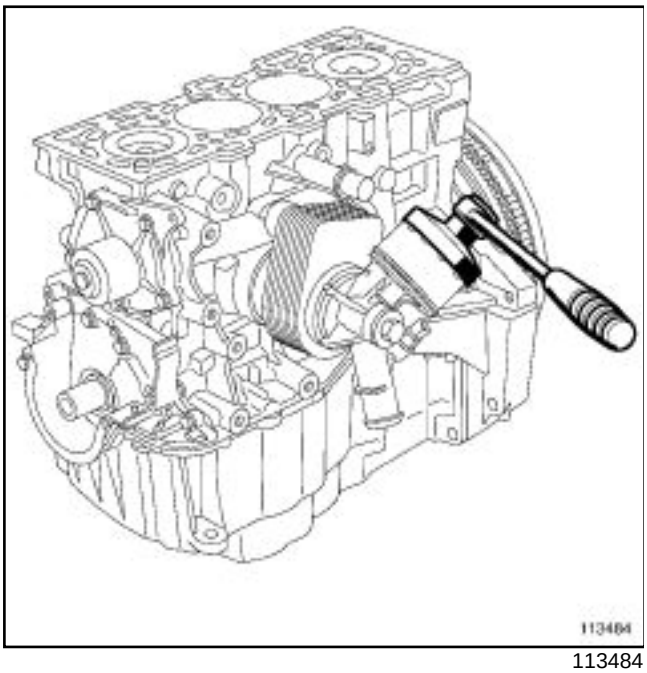

113484

Remove the oil filter using the **(Mot. 1329)** .

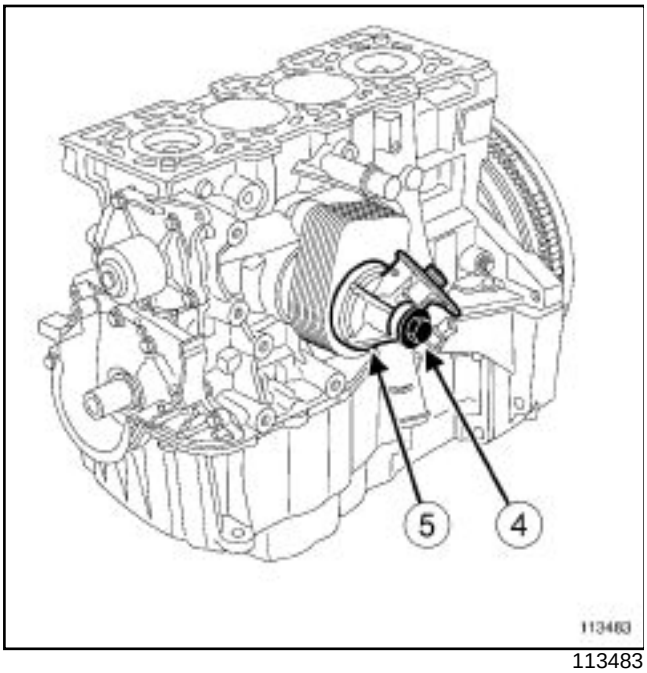

113483

Remove:

- the oil filter holder mounting bolt (**4**) ,
- the oil filter holder (**5**) .

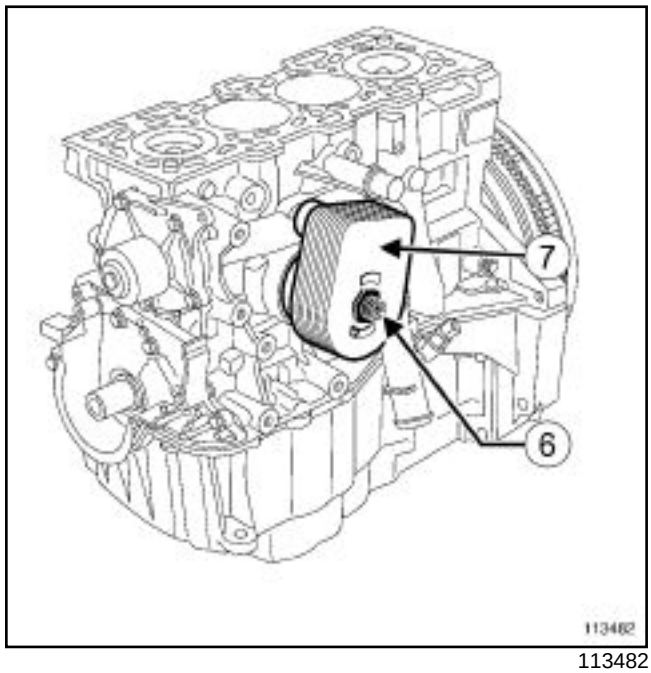

113482

Remove:

- the mounting bolt (**6**) from the oil/coolant heat exchanger,
- the oil/coolant heat exchanger (**7**) .

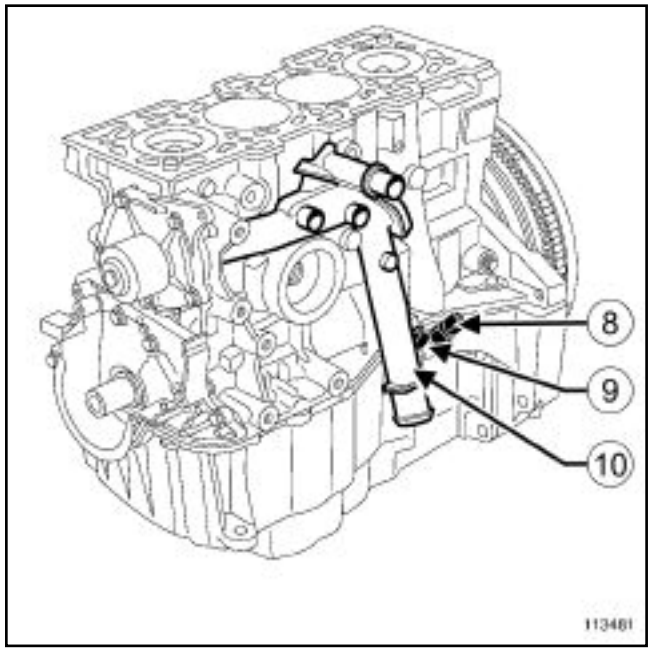

113481

Remove:

- the oil level sensor (**8**) ,
- the mounting bolt (**9**) of the coolant pump inlet pipe,
- the coolant pump inlet pipe (**10**) .

K9K, and 732 or 764

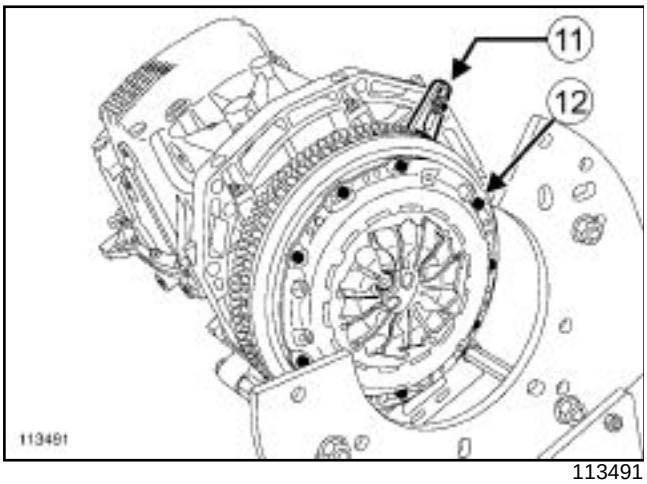

113491

Fit the engine flywheel lock **(Mot. 1677)** (**11**) .

Remove:

- the mounting bolts (**12**) of the clutch pressure plate, using a male torx socket,
- the clutch pressure plate,
- the friction plate.

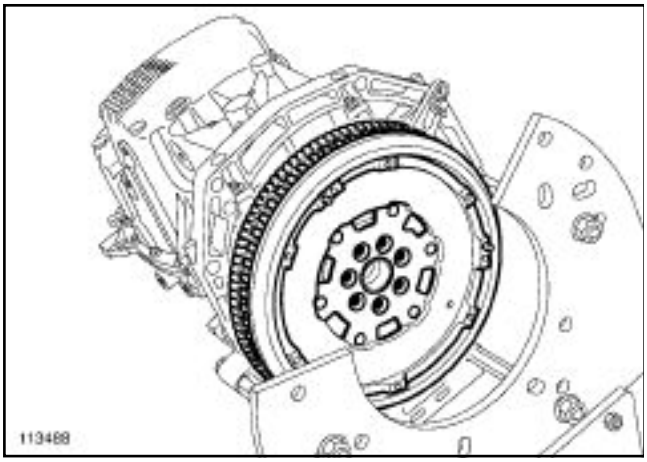

113488

Remove:

- the mounting bolts of the flywheel, using a male torx socket,
- the flywheel block **(Mot. 1677)** ,
- the flywheel.

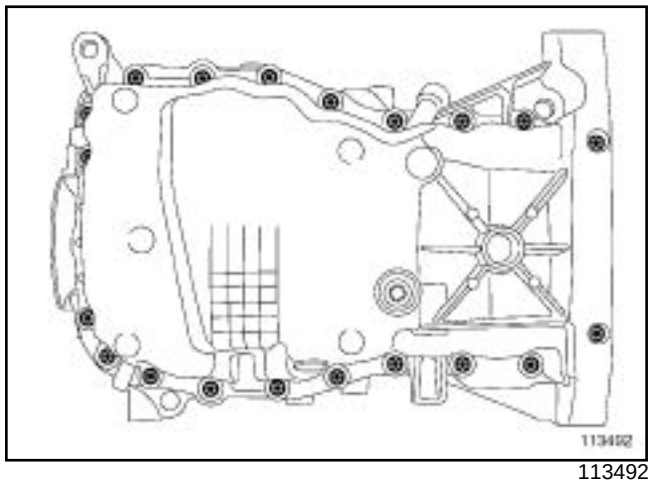

113492

Remove:

- the engine oil sump mounting bolts,
- the engine oil sump.

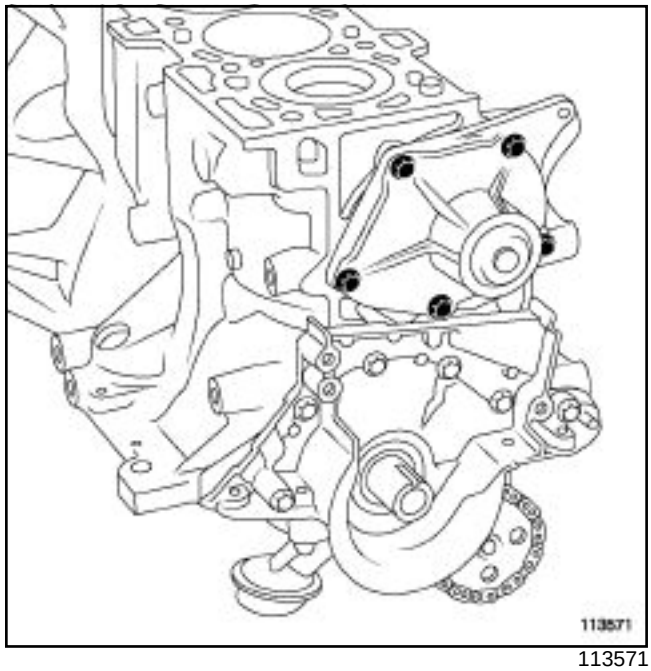

113571

Remove:

- the coolant pump mounting bolts,
- the coolant pump.

K9K, and 732 or 764

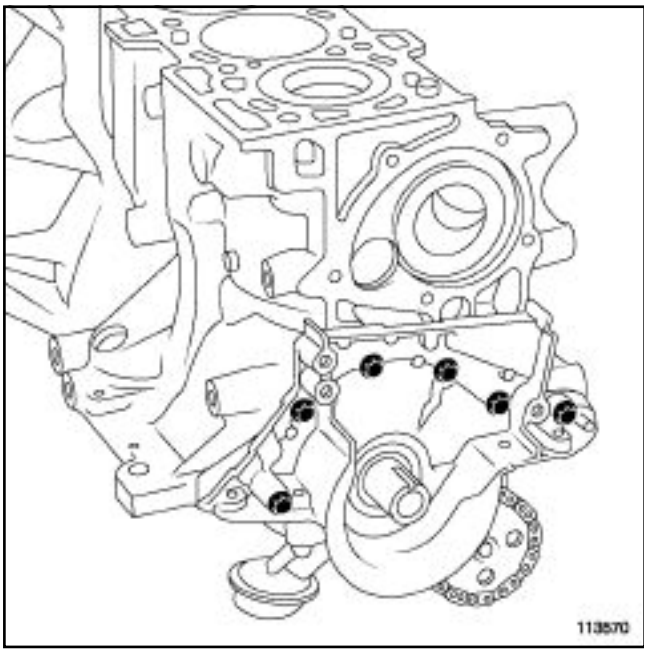

113570

Remove:

- the crankshaft nose closure panel mounting bolt,
- the crankshaft nose closure panel.

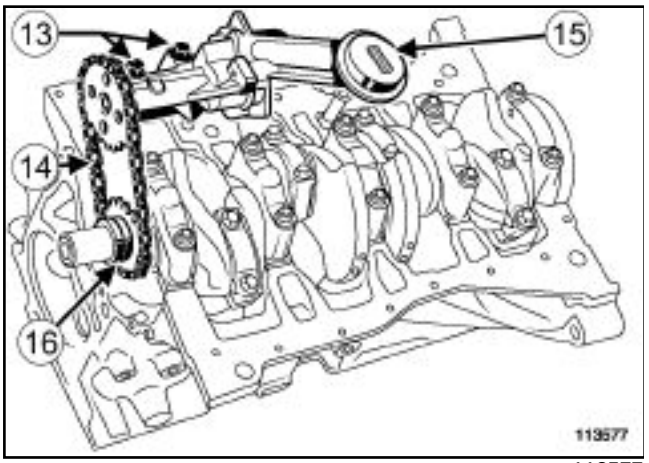

113577

Remove:

- the oil pump mounting bolts (**13**) ,
- the oil pump (**15**) ,
- the oil pump chain (**14**) ,
- the oil pump drive sprocket (**16**) .

I - RECOMMENDATIONS FOR REPAIR

IMPORTANT
Wear protective gloves during every operation.

WARNING
Do not use a punch or an etching tool to mark the con rod caps to match their bodies, to prevent incipient breakage of the con rod.

Use an indelible marker pen.

Note:

It is essential to mark:

- the position of the crankshaft bearings as the class may be different for each bearing,
- the height class of the pistons in relation to the cylinders,
- the gudgeon pin in relation to the piston.

II - EQUIPMENT REQUIRED

- Indelible pencil,
- Female torx socket.
- Mallet,
- Roll pin punch (**10 mm** in diameter).
- Male Allen key (**10 mm**),
- Piston ring compressor,
- Flat-blade screwdriver,

III - REMOVING THE ROTATING PARTS

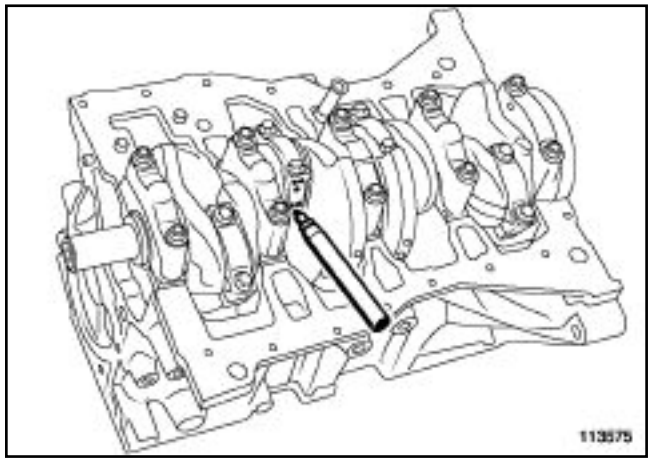

113575

Mark the con rod caps in relation to their bodies using an indelible pencil.

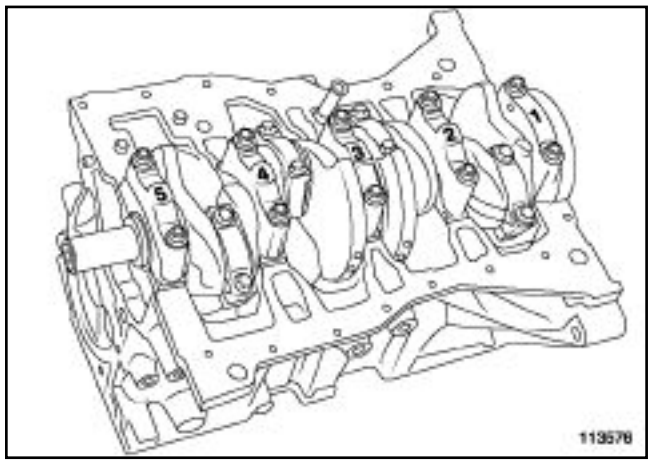

113576

Mark the crankshaft bearing caps (bearing No. 1 at the flywheel end) with an indelible pencil.

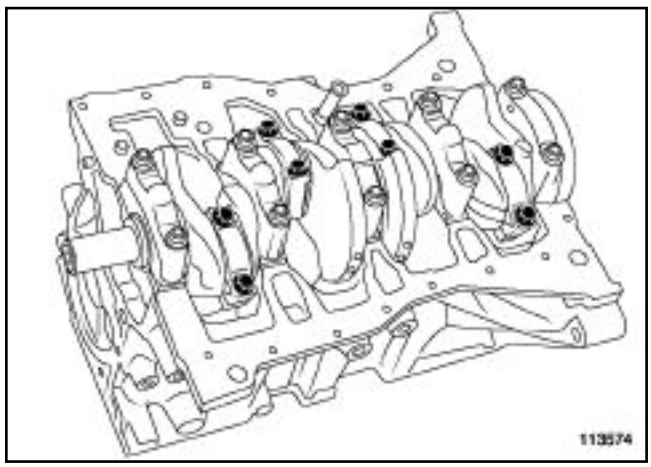

113574

Remove:

- the con rod cap mounting bolts.
- the con rod caps,

- the con rod-piston assemblies.

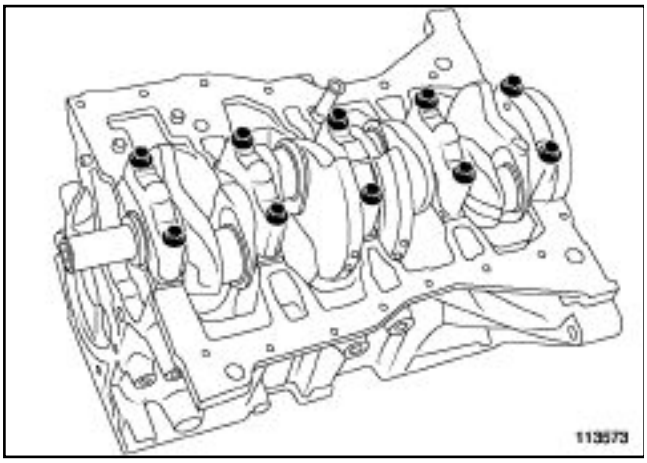

113573

Remove:

- the crankshaft bearing cap mounting bolts.
- the crankshaft bearing caps.

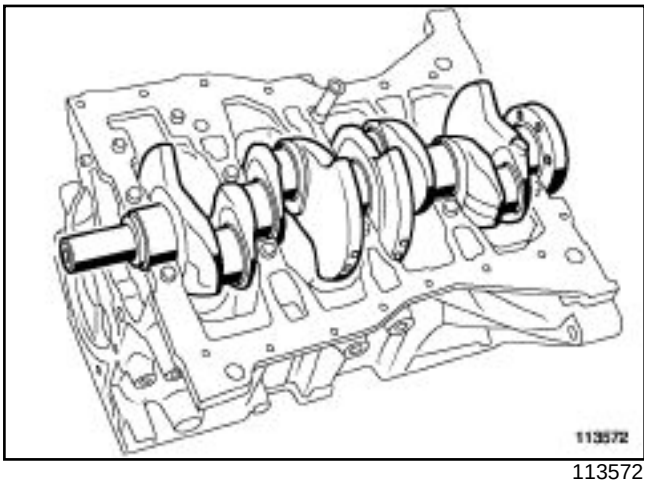

113572

Remove the crankshaft.

Remove the thrust washer from the crankshaft.

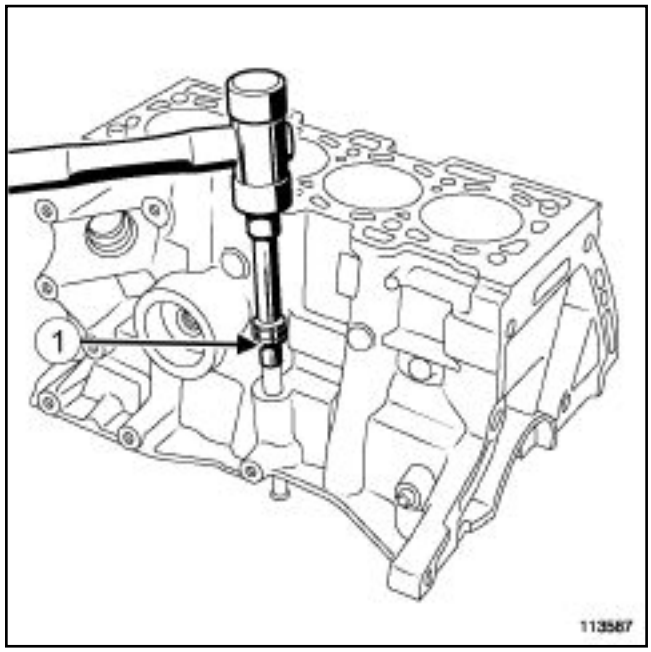

113587

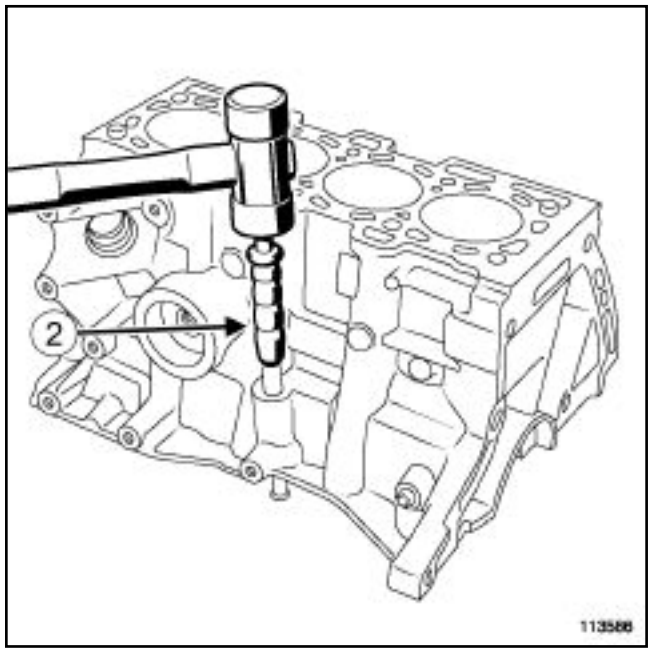

113586

Remove the dipstick guide tube (if the cylinder block is fitted with one) using a **10mm** (**1**) Allen key or a **10mm** (**2**) pin punch.

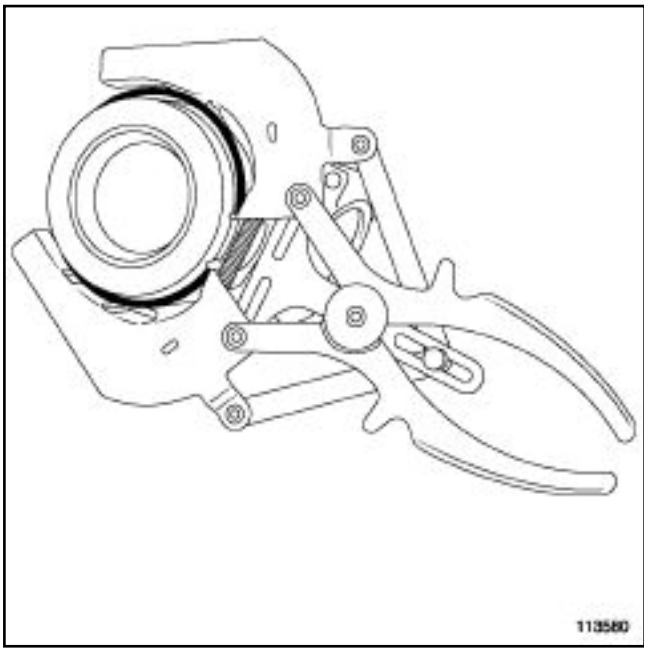

113580

Remove the piston rings using a piston ring compressor.

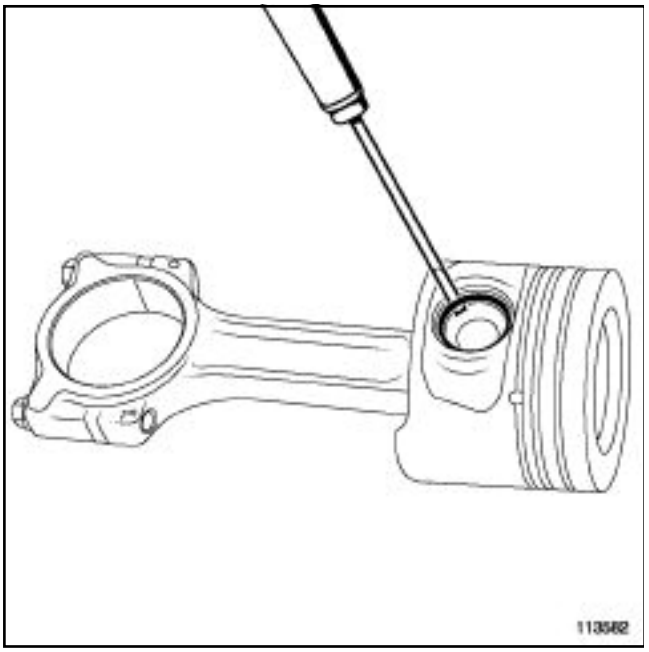

113582

Remove the circlip using a flat-blade screwdriver.

Mark the gudgeon pins in relation to the pistons using an indelible pencil.

Remove the gudgeon pin.

Special tooling required	
Mot. 1485-01	Tool for removing piston coolers.
Emb. 880	Pin extractor.

I - RECOMMENDATIONS FOR REPAIR

IMPORTANT

Wear:

- goggles,
- protective gloves during the whole operation.

WARNING

Do not withdraw the ball of the piston base cooling nozzle, to prevent swarf falling into the oil circuit.

II - EQUIPMENT REQUIRED

- Drill bit **7 mm in diameter**
- Allen key (**6 mm**),
- Brush,
- Protective goggles,
- Compressed air gun.

III - REMOVING THE PISTON BASE COOLING JETS

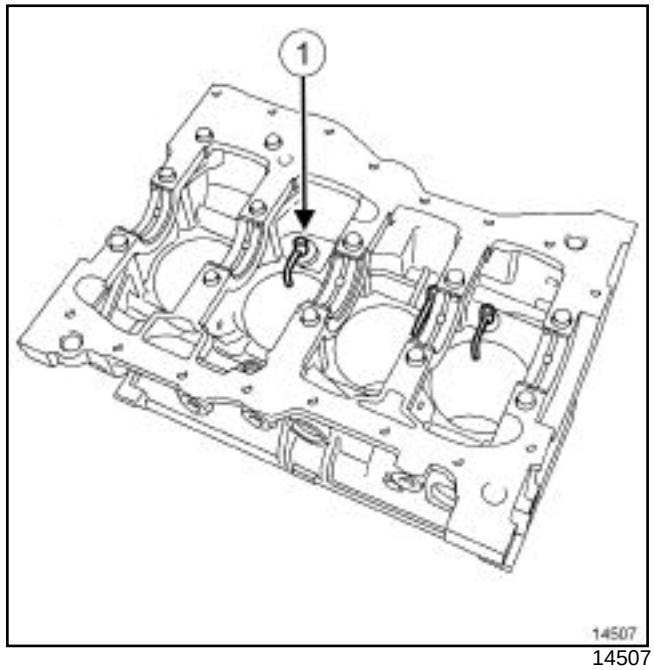

14507

Drill the piston base cooling jets (**1**) using a **7 mm** diameter drill bit.

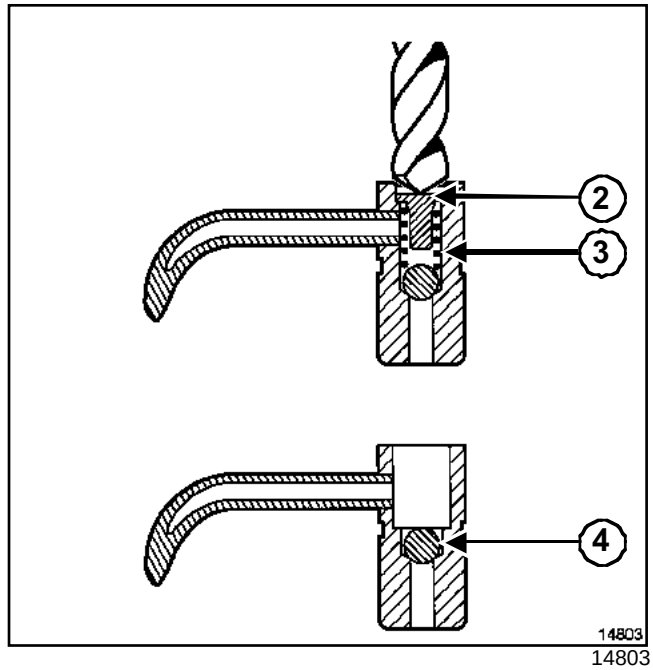

14803

Note:

Do not remove the ball (**4**) .

Remove:

- the spring stop (**2**) ,
- the spring (**3**) .

Wear protective goggles.

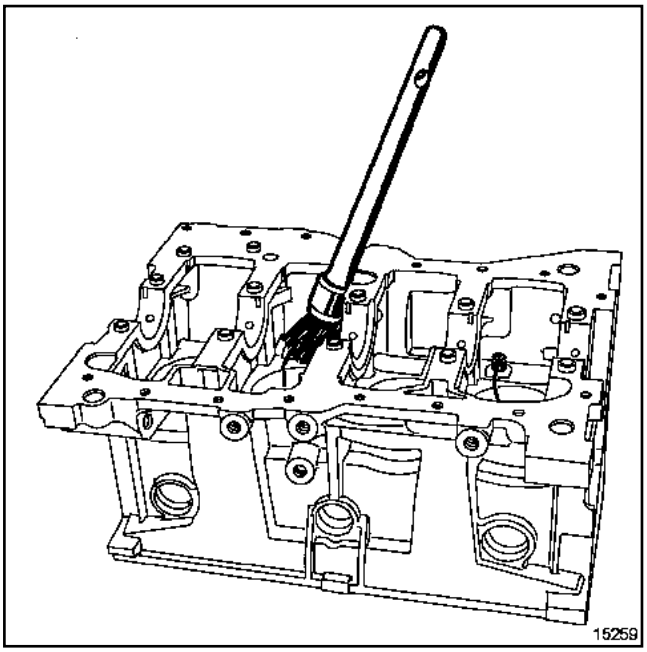

15259

Move any swarf using a brush and compressed air gun.

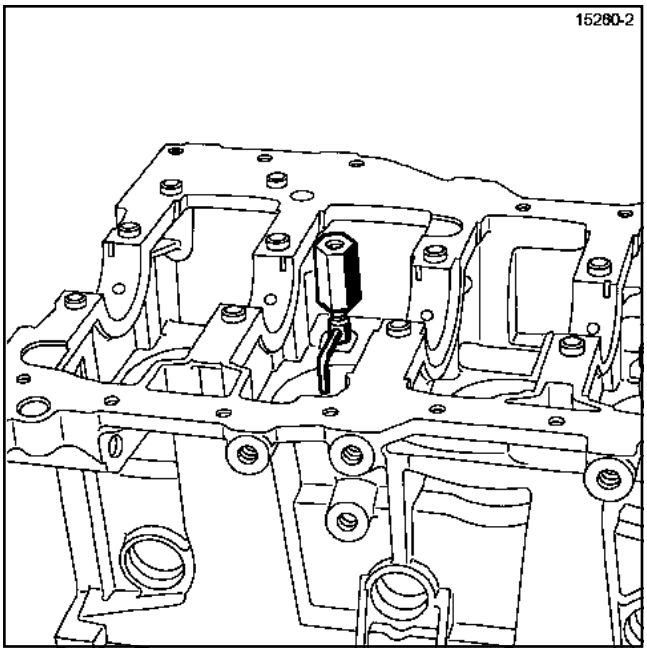

15260-2

Screw the **(Mot. 1485-01)** into the drilled jet with a **6 mm** Allen key, which should slide into the tool.

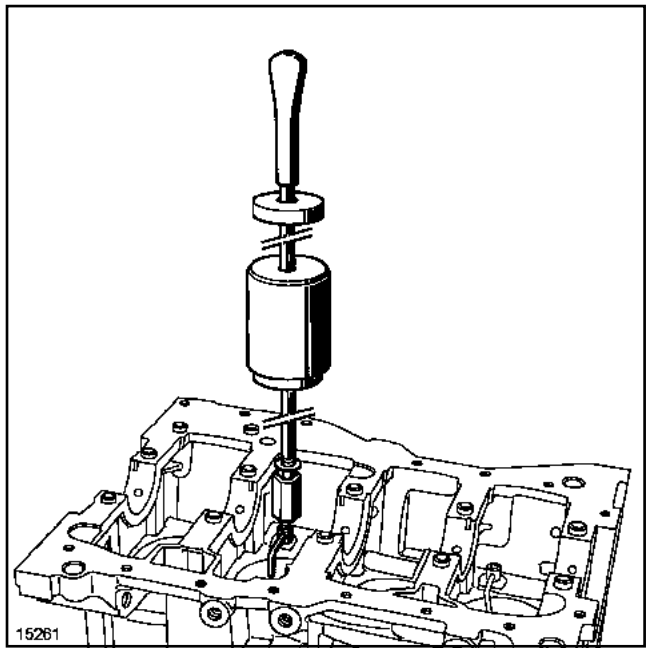

15261

Screw the large slide hammer **(Emb. 880)** on the **(Mot. 1485-01)** .

Remove the piston base cooling jets.

Special tooling required	
Mot. 923	Engine lifting ring.

I - RECOMMENDATIONS FOR REPAIR

IMPORTANT

Do not scratch the aluminium sealing surfaces.

Wear goggles.

Wear gloves during the operation.

WARNING

Do not allow this product to drip on to the paintwork.

Clean the cylinder block components carefully to prevent foreign bodies from entering the oil supply and return galleries.

Failure to follow this advice could lead to the blocking of the various oil inlet galleries, which would quickly result in engine damage.

When cleaning parts, it is essential to not knock the parts against each other, or their mating faces may be damaged and therefore their adjustments may be altered, which could damage the engine.

II - PARTS AND CONSUMABLES FOR THE REPAIR

Consumables

- Décapjoint, part no. **77 01 405 952** ,
- Grey sanding pad, part no. **77 01 405 943** .

III - EQUIPMENT REQUIRED

- Protective goggles,
- Protective gloves,
- Wooden spatula,
- Compressed air gun,
- Load positioner,
- Workshop hoist,
- Cleaning fountain,
- Cleaning bench.

IV - CLEANING THE CYLINDER BLOCK

Apply the **DÉCAPJOINT** product to the sections to be cleaned.

Leave for around ten minutes.

Remove residues with a wooden spatula.

Finish cleaning the parts using a grey polishing pad.

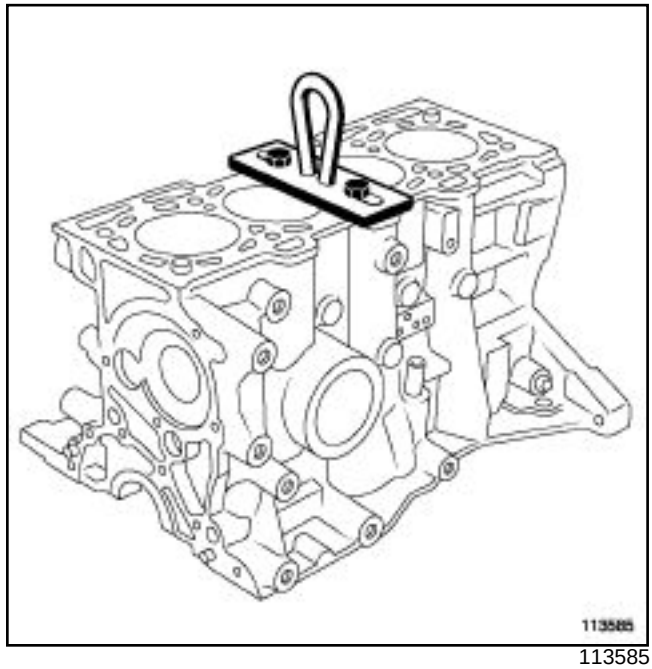

113585

Position the **(Mot. 923)** on the cylinder block.

Remove the cylinder block from the engine stand using a load positioner and a workshop hoist.

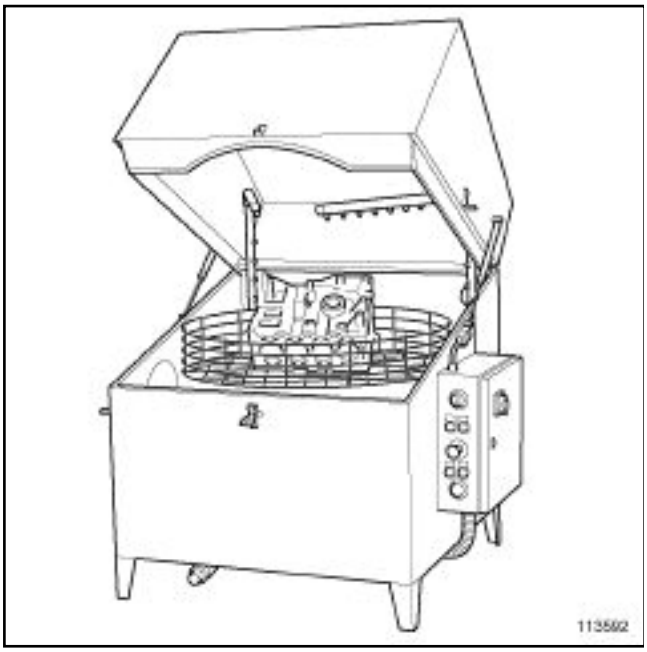

113592

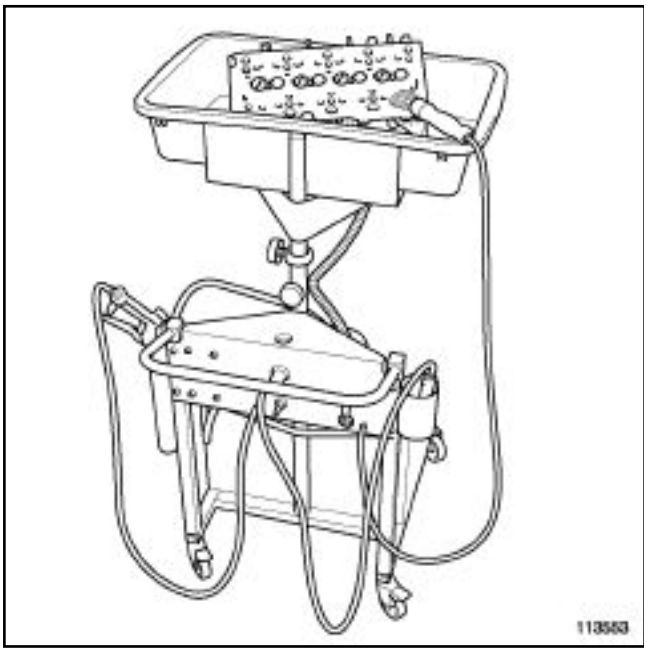

113553

Wash the cylinder block parts using a cleaning fountain or a heated cleaning bath.

Special tooling required	
Mot. 1493-01	Crankshaft bearing centring tool.
Mot. 1492-03	Tool for fitting main bearing shells.
Mot. 1492	Tool for fitting main bearing shells.

I - RECOMMENDATIONS FOR REPAIR

WARNING

Parts should be clean before examining and testing them.

No adjustment is authorised to the cylinder block or the crankshaft.

II - PARTS AND CONSUMABLES FOR THE REPAIR

Consumables

- Degreasing agent, part no. **77 11 224 559** .

III - EQUIPMENT REQUIRED

- Torque wrench and cylinder head bolt tightening gauge (angular measuring type),
- Torque/angle wrench,
- Radial play measuring tape.
- Sliding calliper,
- Micrometer,
- Dial gauge,
- Body jig bench and a pair of v-blocks.
- Magnetic holder,
- Set of shims,
- Cylinder head rule.

IV - CYLINDER BLOCK CHECK

1 - Checking the cylinder block gasket face

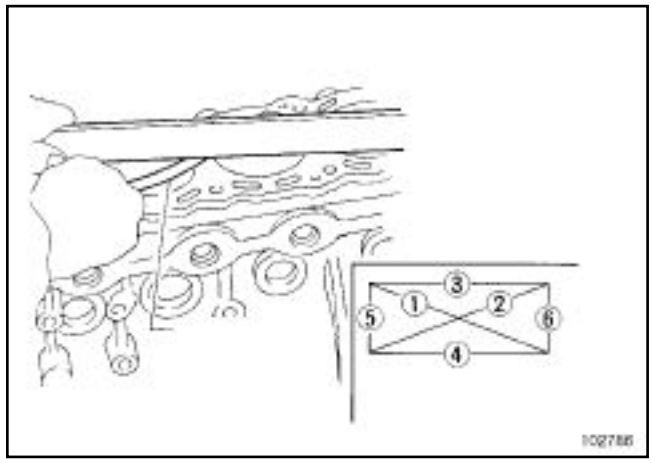

102786

Use a cylinder head adjuster and set of shims to check the seal face bow.

Maximum deformation: **0.03 mm** .

2 - Checking the diameter of the crankshaft bearings on the cylinder block

Refit the crankshaft bearing caps, fitting cap no. **1** at the flywheel end.

Torque and angle tighten **the main bearing cap mounting bolts (25 ± 2.5 Nm + 47° ± 6)** .

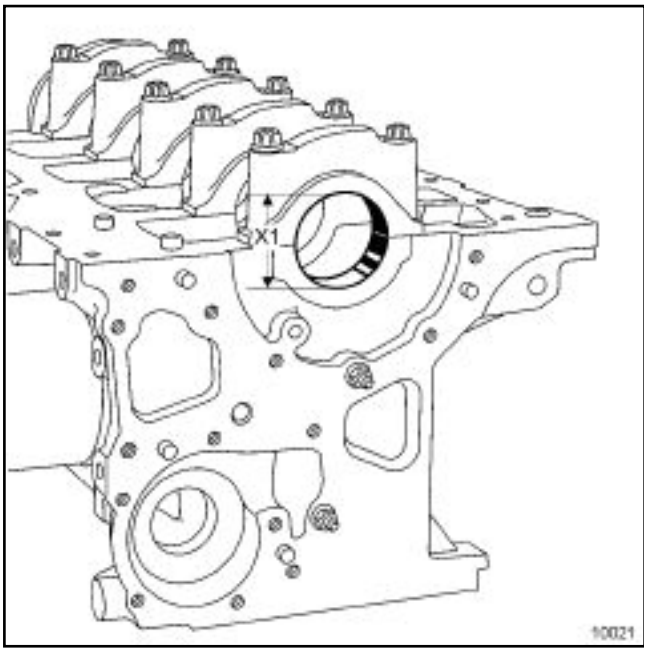

10021

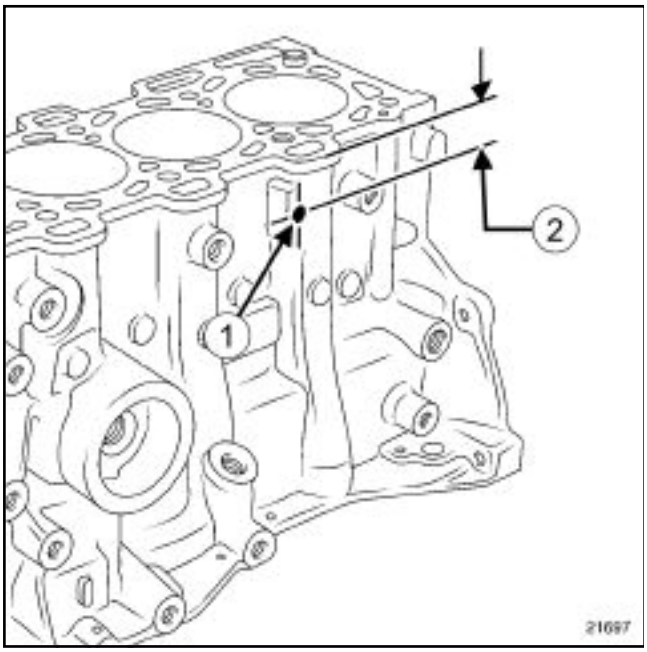

21697

Note:

The hole (**1**) defines the diameter category of the crankshaft bearings on the cylinder block.

It is only possible to have one diameter category of crankshaft bearings on one engine.

Measure the dimension (**2**) to identify the diameter category of the crankshaft bearings on the cylinder block.

(2) = **33 mm** :

- the diameter category is **1** ,
- the diameter of the crankshaft bearings on the cylinder block is **51.936 to 51.942 mm excl.** .

(2) = **43 mm** :

- the diameter category is **2** ,
- the diameter of the crankshaft bearings on the cylinder block is **51.942 incl. to 51.949 mm** .

Remove the crankshaft bearing caps.

3 - Check the diameter of the crankshaft journals

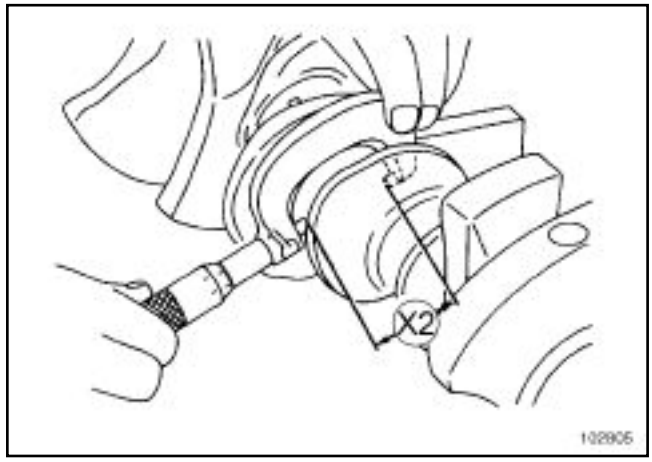

102805

Measure the diameter of the journals using a micrometer (**X2**) .

Marking one

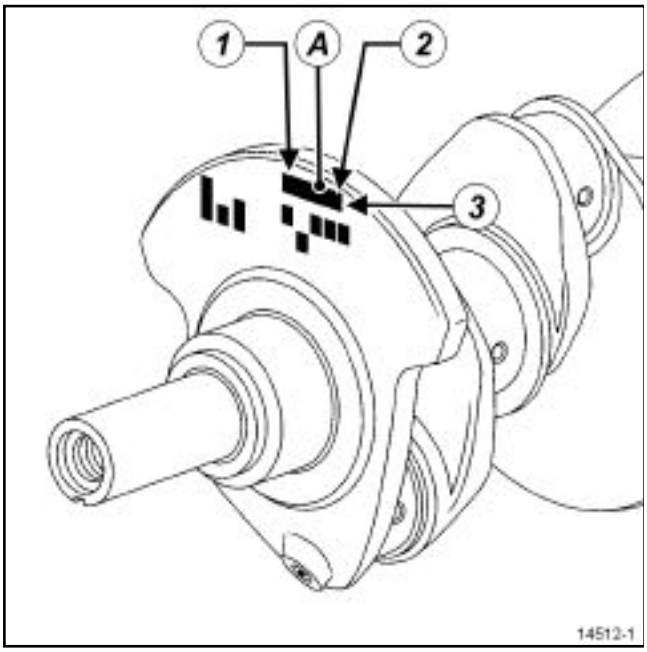

14512-1

Marking two

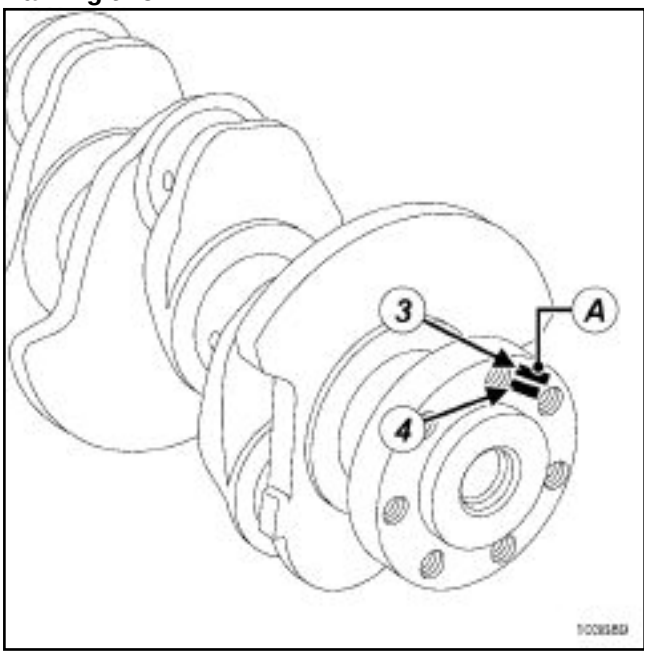

103689

Detail of marking "A".

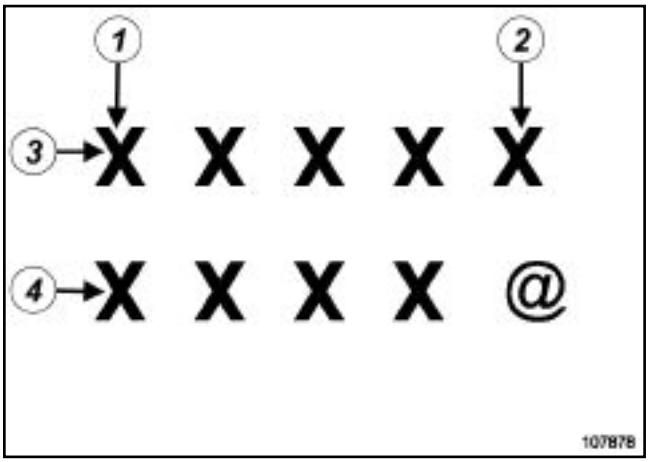

107878

(**1**)	diameter category of journal no.1, flywheel end,
(**2**)	diameter category of journal no.5, timing end,
(**3**)	line indicating the diameter class of the journals,
(**4**)	line indicating the diameter class of the crankpins.

The marks of journal category **A, G, K, R,W** correspond to a diameter of **47.990 to 47.997 mm excl.** ,

The marks of journal category **B, H, L, S, Y** correspond to a diameter of **47.997 incl. to 48.003 mm excl.** ,

The marks of journal category **C, J, O, T, Z** correspond to a diameter of **48.003 incl. to 48.010 mm excl.** ,

4 - Check the diameter of the crankshaft crankpins

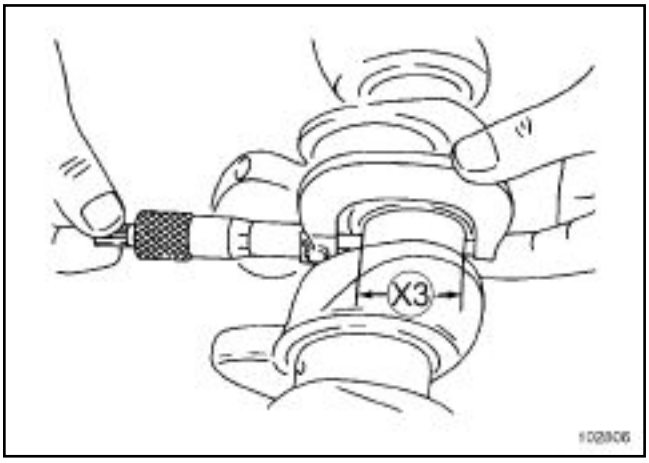

102806

Using a micrometer, measure the diameter of the crankpins (**X3**) which should be **43.97 ± 0.01 mm** .

5 - Check for deformation of the contact surface of the crankshaft flywheel

Position the crankshaft on the v-blocks

Place the dial gauge at the base of the crankshaft.

Measure the deformation of the contact surface of the flywheel which should not be greater than **0.6 mm** .

6 - Checking the crankshaft lateral clearance

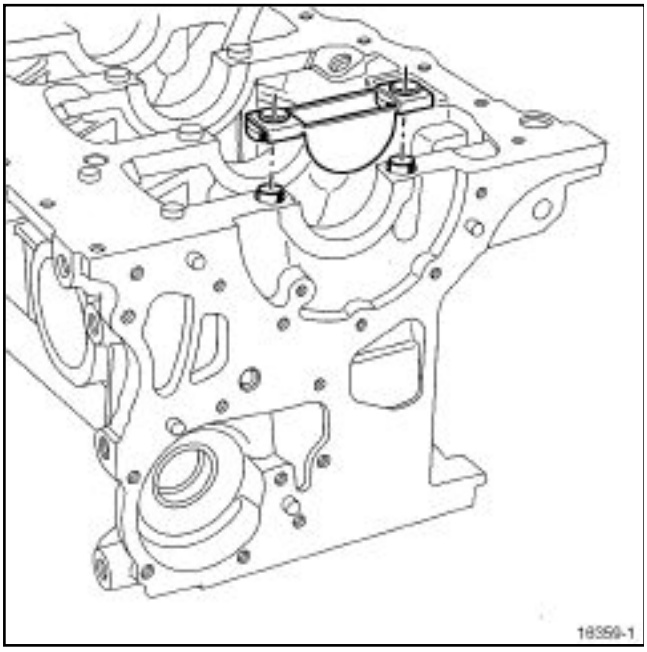

16359-1

Position the **(Mot. 1493-01)** on the cylinder block.

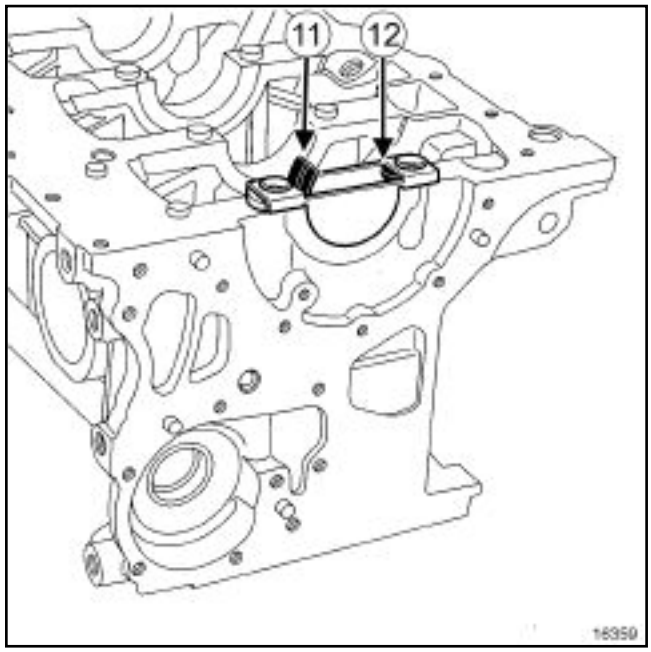

16359

Mount the grooved bearing shell on the **(Mot. 1493-01)** .

Press at (**11**) on the bearing until it is in contact with the tool at (**12**) .

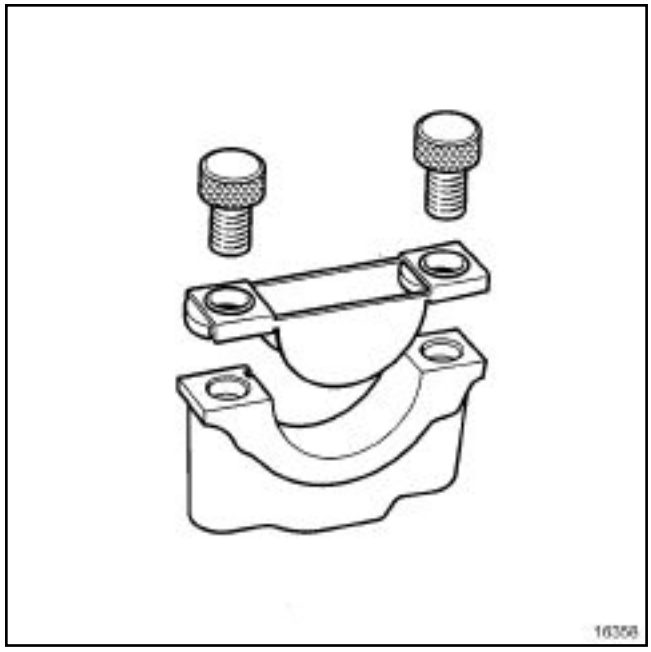

16358

Position the **(Mot. 1493-01)** on the crankshaft bearing cap.

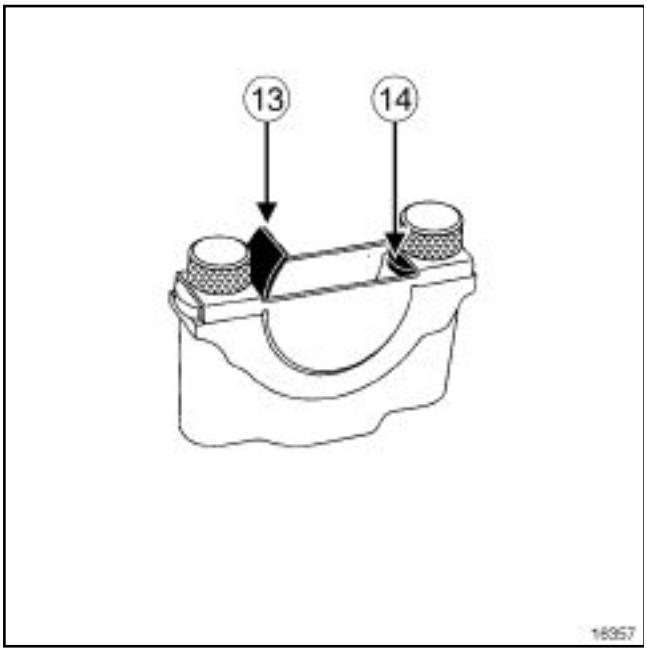

16357

Fit the non grooved bearing shell into the **(Mot. 1493-01)** .

Press at (**13**) on the bearing until it is in contact with the tool at (**14**) .

Lubricate:

- the crankshaft bearing shells (only the surface in contact with the crankshaft).
- the crankshaft journals.

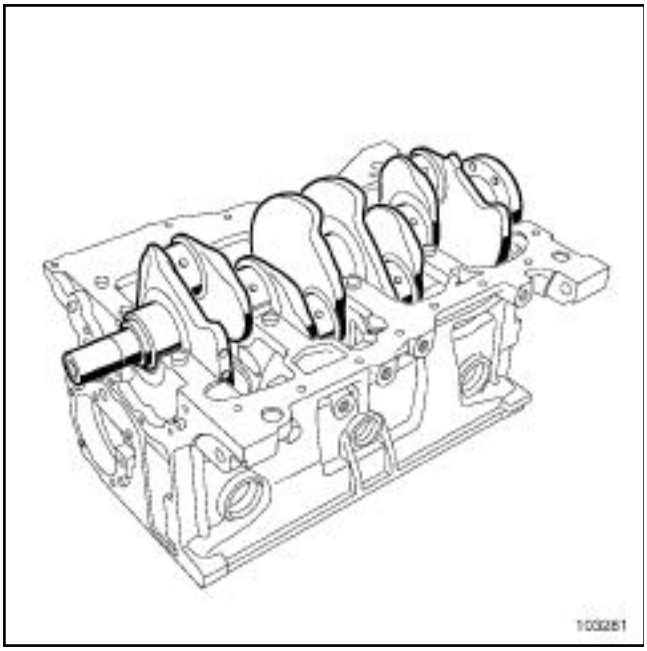

103281

Refit:

- the crankshaft,
- the crankshaft thrust washer on bearing **No.3** , positioning the grooves of the thrust washers at the crankshaft end.

Refit the crankshaft bearing caps (positioning bearing cap No. 1 at the flywheel end).

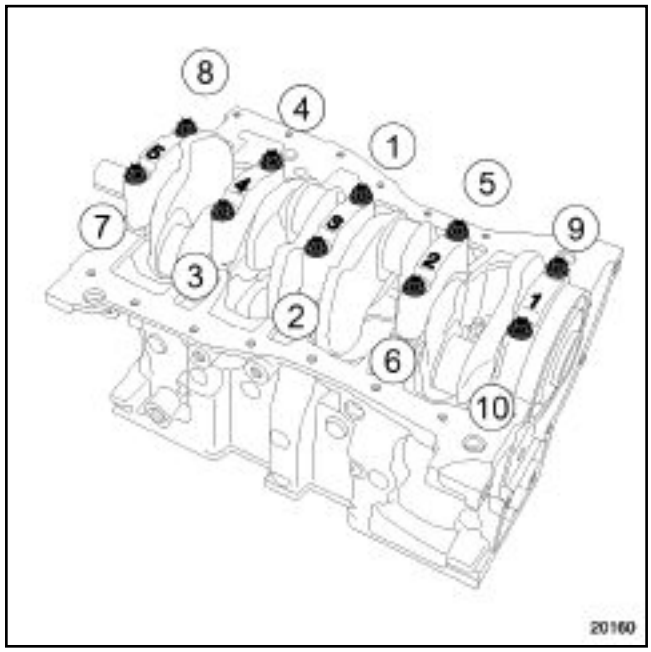

20160

Torque and angle tighten in order **the crankshaft bearing cap mounting bolts (25 ± 2.5 Nm + 47° ± 6°)** .

Check that the crankshaft turns freely, with no resistance.

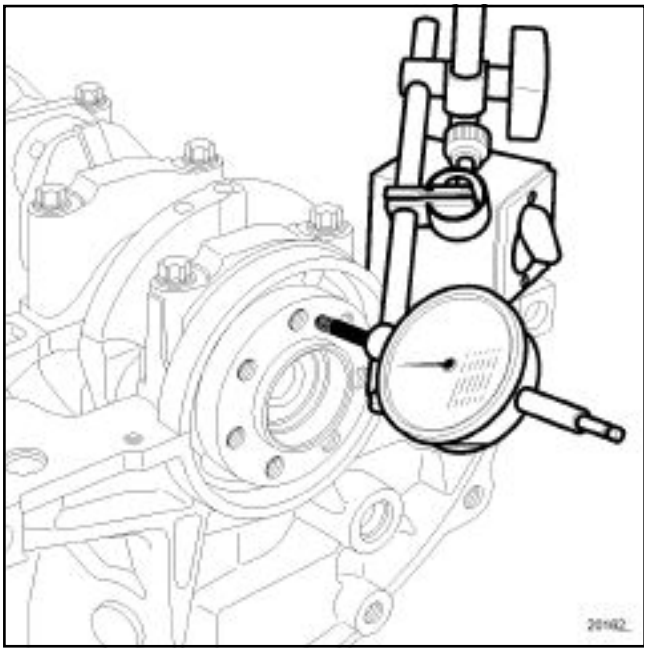

20162

Check the lateral clearance of the crankshaft, which must be:

- without thrust washer wear: **0.045 to 0.252 mm** ,
- with thrust washer wear: **0.045 to 0.852 mm** .

Remove:

- the crankshaft bearing caps,
- the crankshaft.

7 - Checking the crankshaft diametric clearance

> Note:
>
> Never turn the crankshaft during the operation.

Remove any oil that may be on the crankshaft journals and cylinder block bearings.

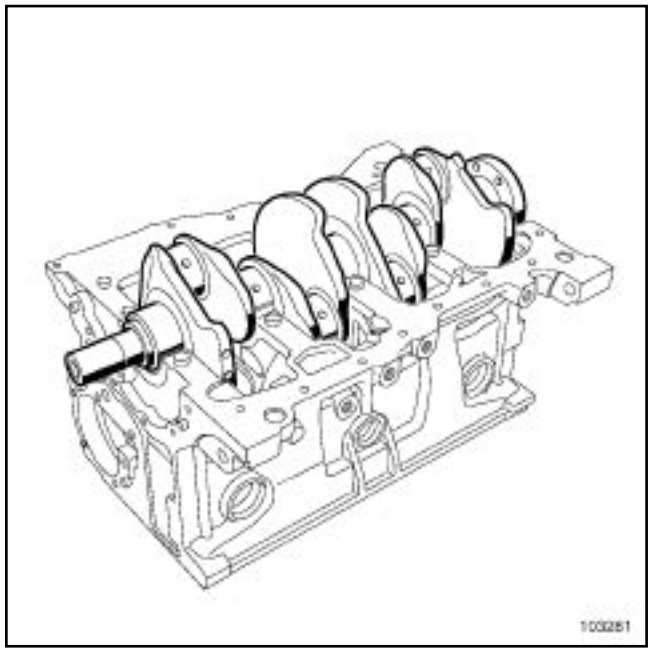

103281

Refit:

- the crankshaft,
- the crankshaft thrust washer on bearing **No.3** (grooves at crankshaft end).

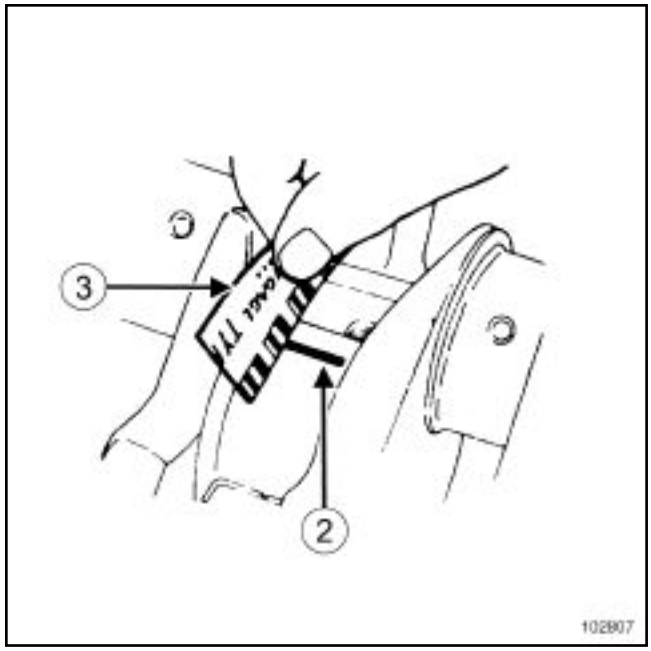

102807

Cut bits of wire (**2**) to measure the clearance.

Insert the wire into the axis of the crankshaft journals (avoiding the bearing lubrication holes).

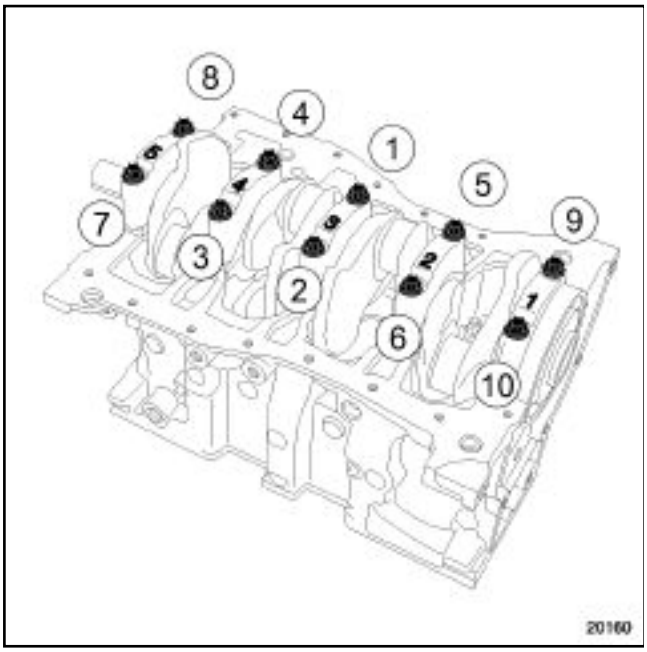

20160

Refit the crankshaft bearing caps, fitting **No.1** at the flywheel end.

Torque and angle tighten in order **the crankshaft bearing cap mounting bolts (25 ± 2.5 Nm + 47° ± 6°)** .

Remove:

- the crankshaft bearing caps,
- the crankshaft.

Measure the flattening of the clearance measuring wire using packaging paper **(3)** .

Check the clearance value, which must be between **0.010 and 0.054 mm** .

Clean any traces of measuring wire off the crankshaft and the bearing shells using degreasing agent.

8 - Checking the centre distance of the con rod

The distance between the small end and big end of the con rod should be **133.75 mm** .

9 - Checking the centre distance of the con rod

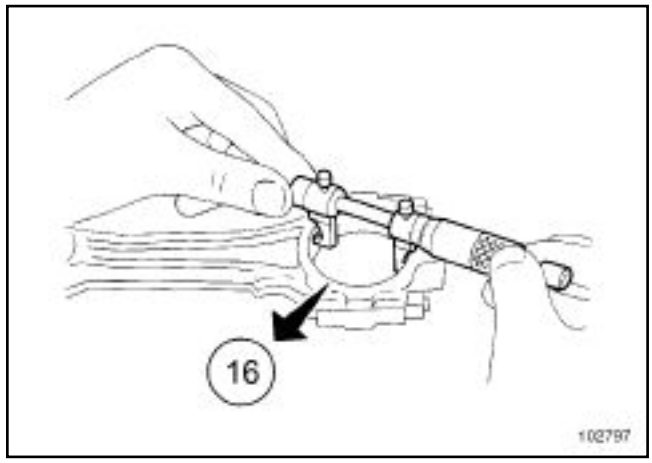

102797

Using a micrometer, measure the diameter of the big end, which should be **47.619 ± 0.009 mm** .

10 - Checking the diameter of the con rod small end

Using a micrometer, measure the diameter of the con rod small end (with ring):

- For engines K9K 260-700-702-704-710-722 manufactured up to 25/11/2002 the diameter should be **25.019 ± 0.006 mm** ,
- For engines K9K 260-700-702-704-710-722 from 25/11/2002 and engines K9K 270-272-274-276-706-712-714-716-718-724-728-729-732-750-752-760-762-764-766-768-790-792, the diameter should be between **26.019 ± 0.006 mm** .

11 - Checking the diametric clearance of the big ends

> Note:
>
> Never turn the crankshaft during the operation.

Remove any oil that may be on the crankshaft journals and cylinder block bearings.

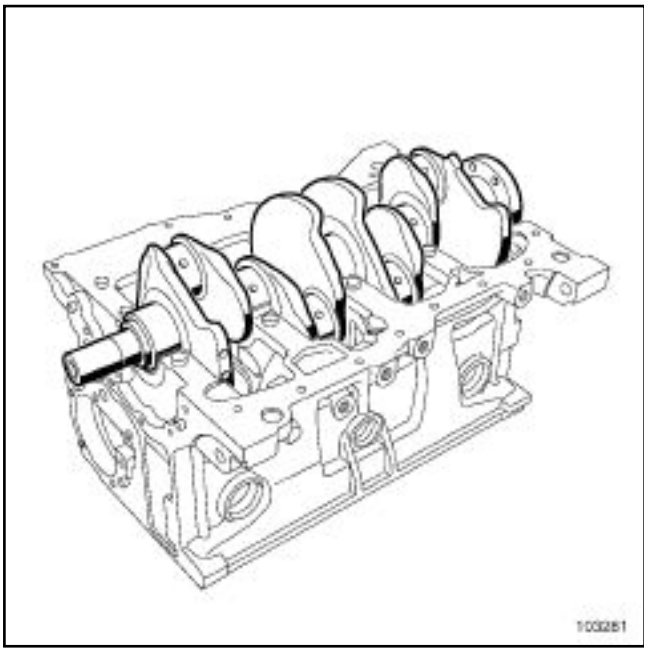

103281

Refit:

- the crankshaft,
- the crankshaft thrust washers on bearing **No.3** (grooves at crankshaft end).

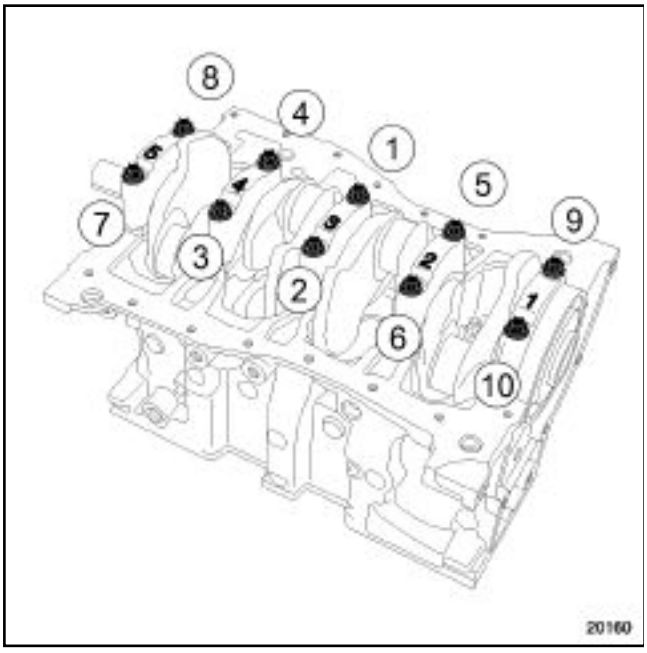

20160

Refit the crankshaft bearing caps, fitting **No.1** at the flywheel end.

Torque and angle tighten in order **the crankshaft bearing cap mounting bolts (25 ± 2.5 Nm + 47° ± 6°)** .

Refitting the con rod bearings on the con rod body.

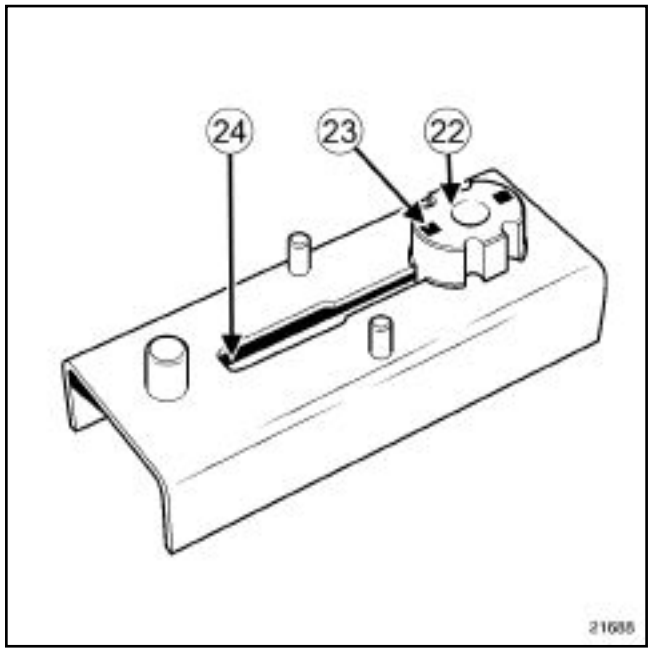

21688

Slide the bearing support (**22**) (positioning the marking "A" (**23**) as indicated in the diagram) of the **(Mot. 1492-03)** in the groove (**24**) of the tool block **(Mot. 1492)** .

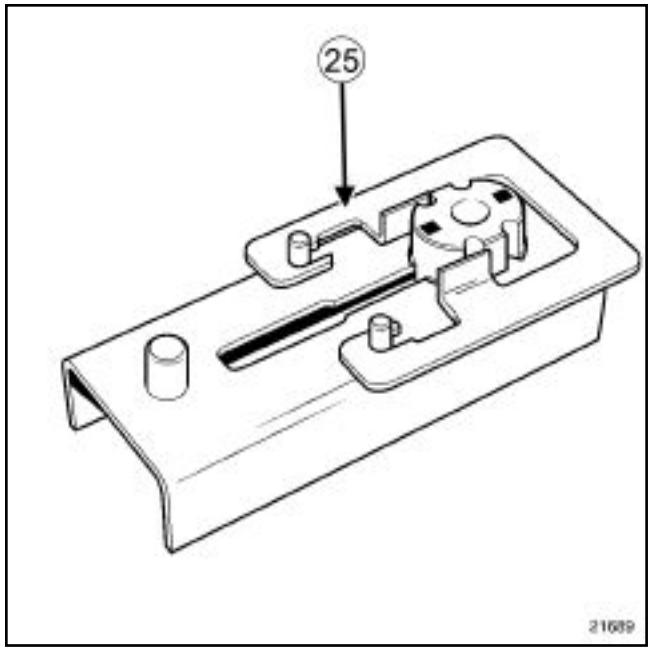

21689

Place the rail (**25**) of the **(Mot. 1492-03)** on the base.

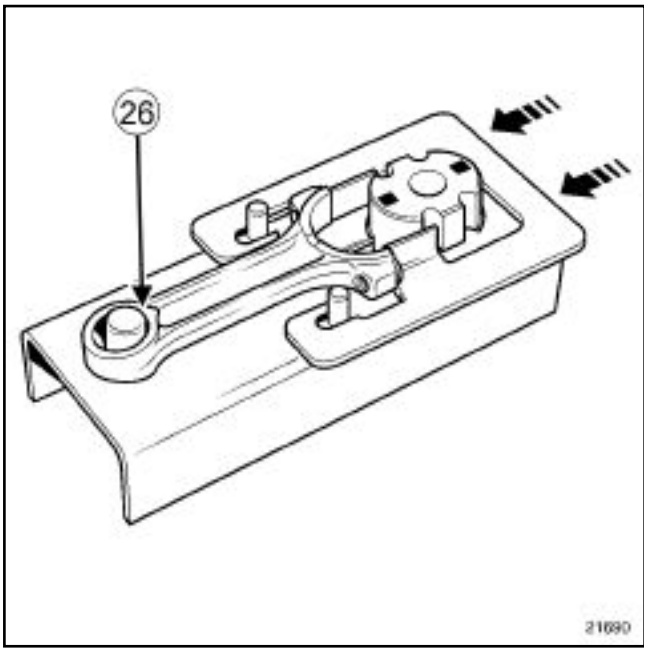

21690

Mount the con rod body on the base.

Check that the lower part (**26**) of the small end is in contact with the centring pin.

Push the rail (in the direction shown by the arrow) until the rail presses against the con rod end.

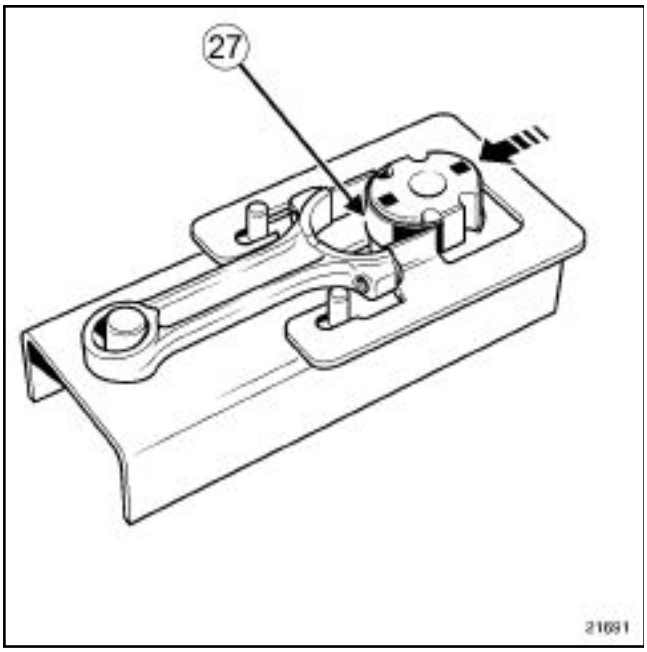

21691

Mount the bearing shell (**27**) (with a width of **20.625 mm** on the bearing shell support.

Push the bearing shell support in the direction shown by the arrow.

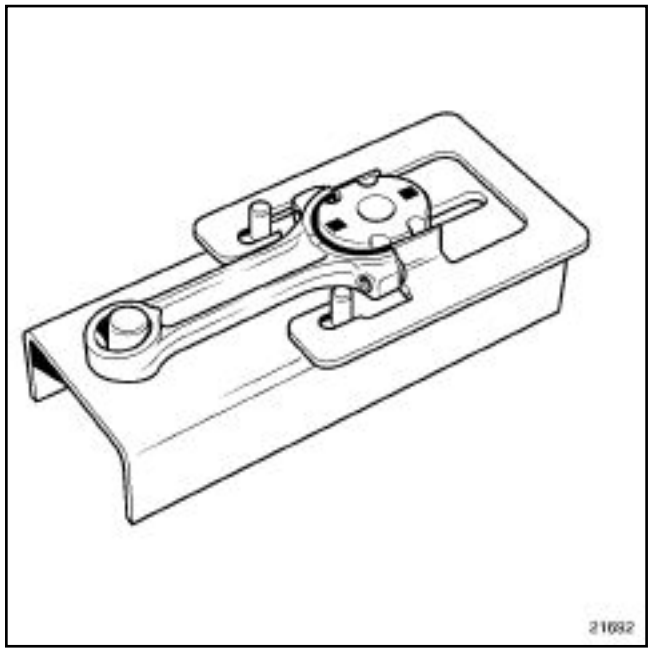

21692

Bring the bearing shell support to the end of the con rod body base.

Remove the support shell from the con rod body.

Repeat the operation for the other con rod bodies.

Refitting the con rod bearings on the con rod cap.

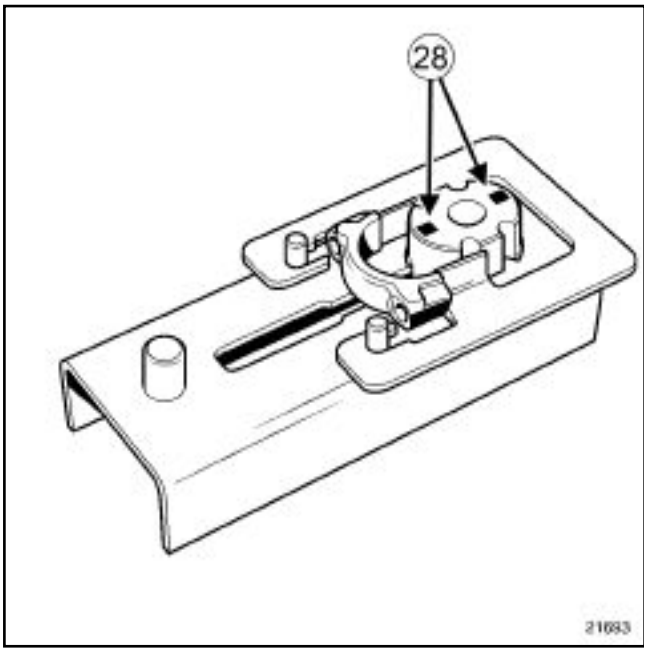

21693

Position the bearing shell support, aligning the marking "A" or "B" (**28**) on the side of the cap as follows:

- a bearing shell width of **20.625 mm** corresponds to "A",
- a bearing shell width of **17.625 mm** corresponds to "B",

Mount the con rod cap on the base.

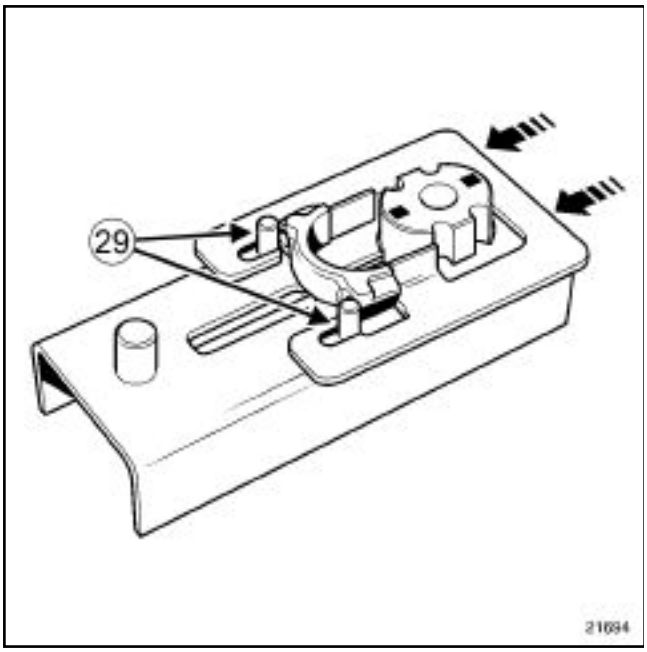

21694

Push the rail in the direction shown by the arrow until the con rod cap presses against the pins (**29**) on the base.

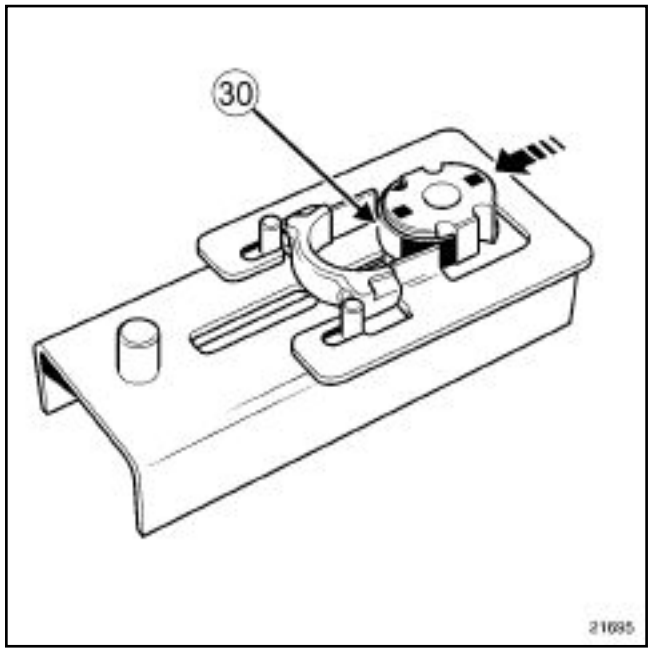

21695

Mount the bearing shell (**30**) on the bearing shell support.

Push the bearing shell support in the direction shown by the arrow.

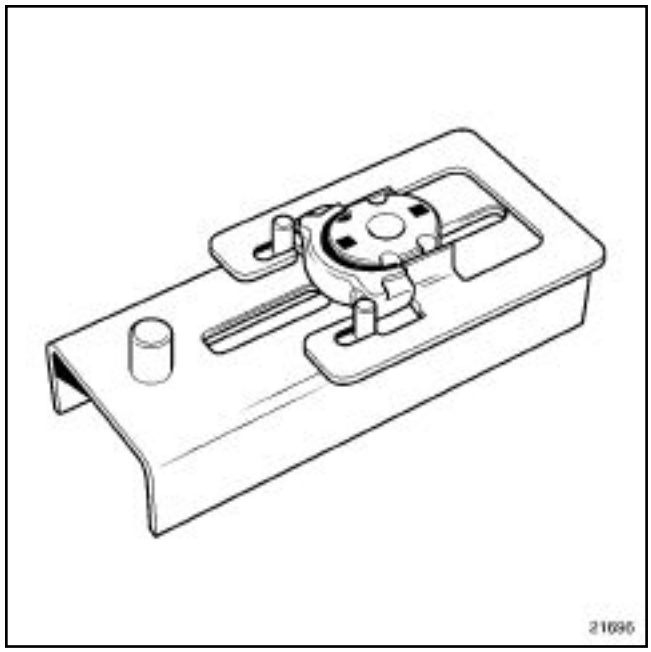

21696

Bring the bearing shell support to the end of the con rod cap base.

Remove the bearing shell from the con rod cap.

Repeat the operation for the other con rod caps.

Using an indelible pencil, mark the gudgeon pin position in relation to the piston.

Lubricate gudgeon pin with engine oil.

Check that the gudgeon pin slides and turns freely in the piston.

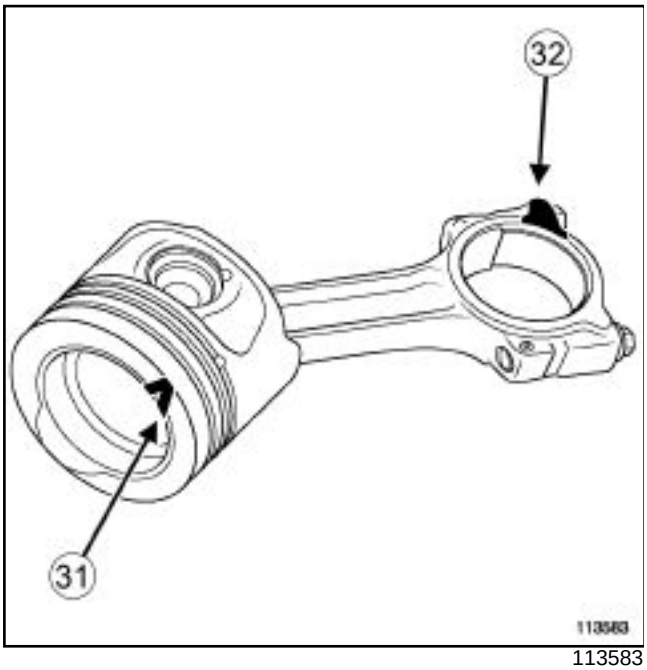

113583

Position the mark **"V"** (**31**) of the piston and the flat surface (**32**) of the con rod cap as indicated in the illustration.

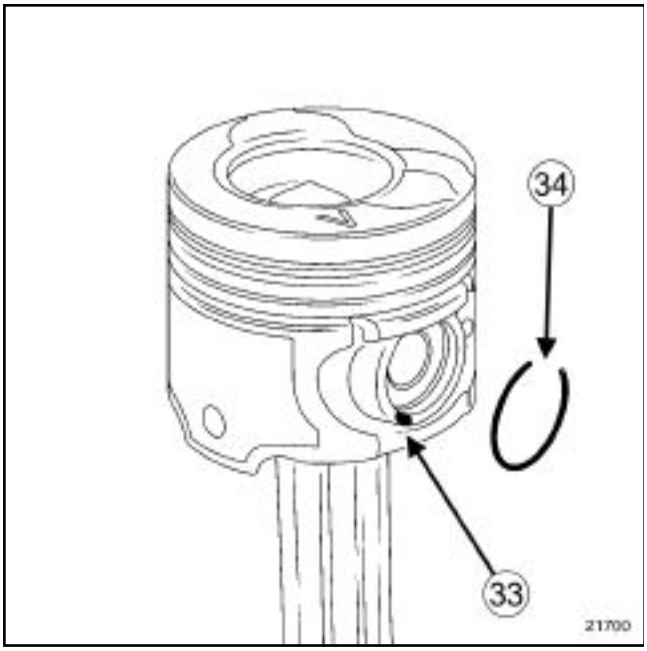

21700

Refit the circlip of the gudgeon pin, positioning the opening (**34**) of the circlip opposite the notch (**33**) .

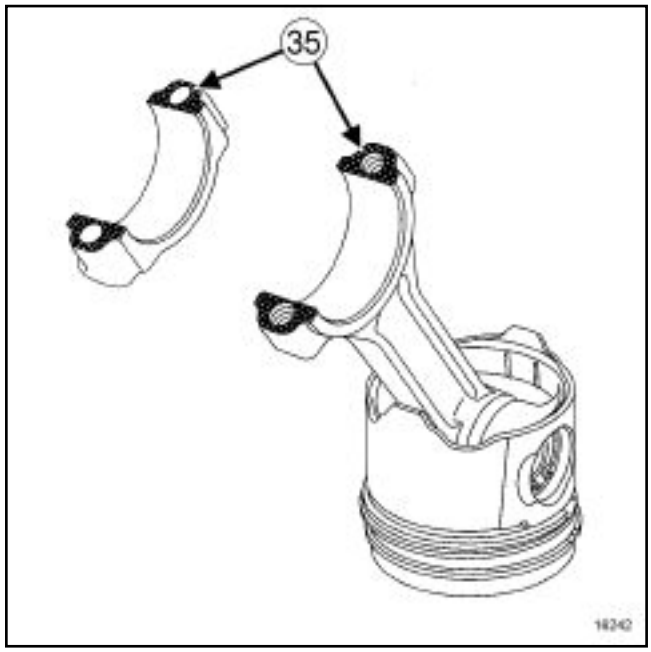

16242

Using degreasing agent, degrease the contact surfaces (**35**) between the cap and body of the con rod.

Note:

Ensure that the piston matches the cylinder block barrel (No.1 at flywheel end) .

Ensure the correct con rod-piston orientation, positioning the "V" engraved on the piston crown towards the flywheel .

Refit the con rod-piston assembly (without piston rings) onto the cylinder block.

Mount the con rod heads on the crankshaft crankpins.

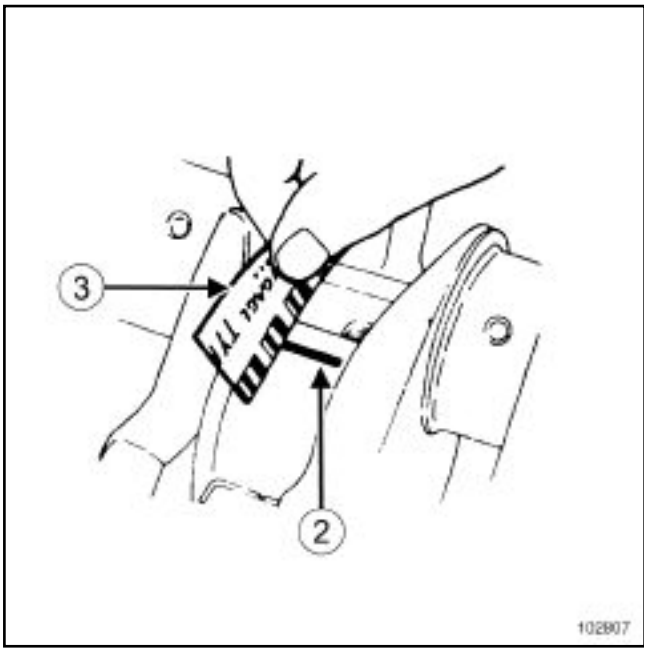

102807

Cut bits of wire (**2**) used to measure the clearance.

Insert the wire into the axis of the crankshaft crankpins (avoiding the bearing lubrication holes).

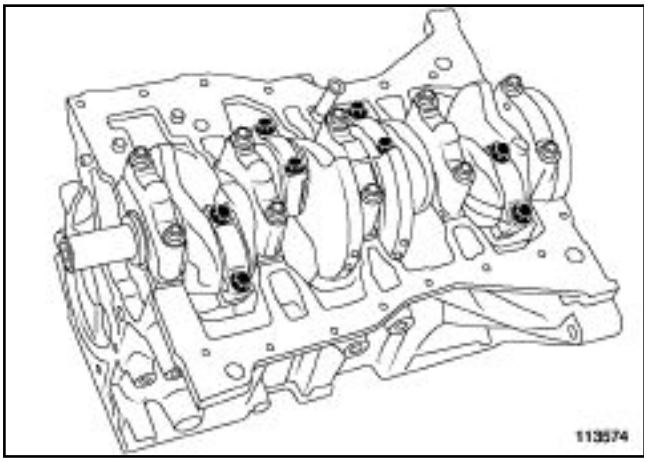

113574

Refit:

- the con rod caps, ensuring correct matching,
- the con rod cap mounting bolts.

Torque and angle tighten **the con rod cap mounting bolts (20 ± 2 Nm + 45° ± 6)** .

Remove:

- the con rod caps,
- the con rod-piston assembly.

Measure the flattening of the clearance measuring wire using packaging paper **(3)** .

Check the clearance value, which must be between **0.010 and 0.064 mm** .

Clean any traces of measuring wire off the crankshaft and the bearing shells using degreasing agent.

Remove:

- the crankshaft bearing caps,
- the con rod pistons,
- the crankshaft.

12 - Checking the thickness of the piston rings

Measure the thickness of the piston rings using a micrometer.

- the compression ring must be **2 mm -0.01 / -0.03** .
- the sealing ring must be **2 mm -0.01 / -0.03** .
- the scraper ring must be **2.5 mm -0.01 / -0.03** .

13 - Checking the clearance between the piston grooves and the piston rings

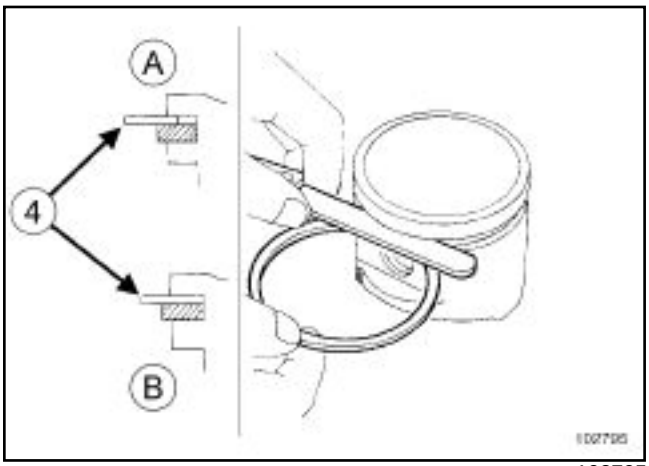

102795

Measure the clearance between the piston grooves and piston rings using a set of shims (**4**) .

- (**A**) : Set of shims incorrectly positioned,
- (**B**) : Set of shims correctly positioned.

The compression ring clearance must be **0.10 to 0.12 mm** .

The clearance for the sealing ring must be **0.08 to 0.10 mm** .

the scraper ring clearance must be **0.03 to 0.05 mm** .

If the clearance is not within tolerance, replace the piston-gudgeon pin assembly, or the piston rings.

14 - Checking clearance at the ring section

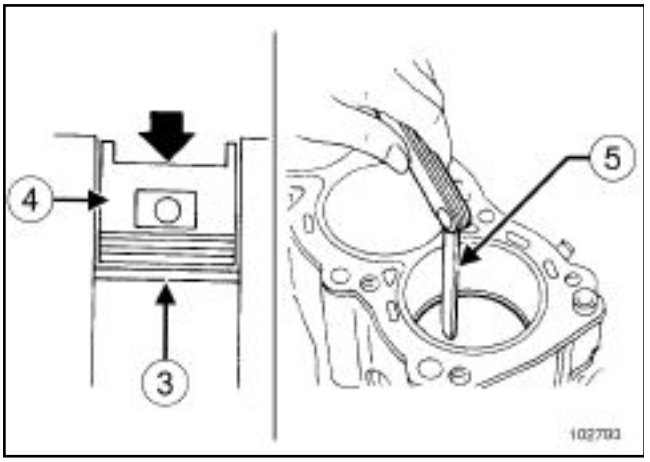

102793

Position the ring (**3**) in the cylinder

Push the piston ring (**3**) to the centre of the cylinder using the piston (**4**) .

Measure the piston ring end clearance using a set of shims (**5**) .

- Compression ring end clearance must be **0.20 to 0.35 mm** ,
- Sealing ring end clearance must be **0.70 to 0.90 mm** .
- Oil control ring end clearance should be **0.25 to 0.50 mm** .

15 - Checking the piston diameter

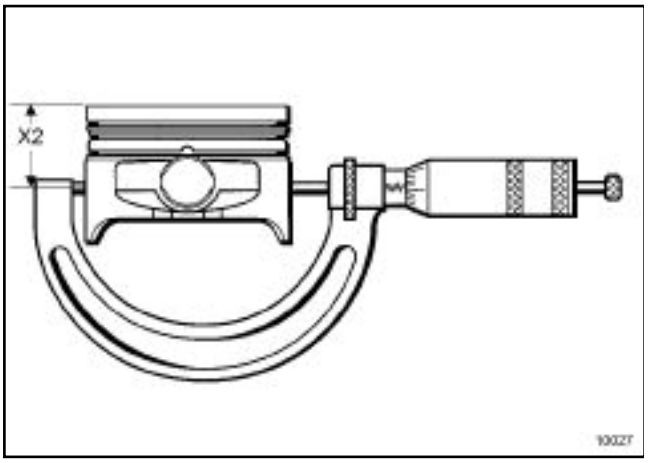

10027

The piston diameter should be measured at height (**X2**) = **56 mm** .

The diameter of the piston must be:

- **75.949 ± 0.007 mm** for engines K9K 260-270-272-274-700-702-704-706-710-714-716-722-750-752-762-768-790-792,
- **75.945 ± 0.007 mm** for engines K9K 276-712-718-724-728-729-732-760-764-766.

16 - Checking the coolant pump

Check that there is no play nor resistance at the coolant pump.

Special tooling required	
Mot. 1494	Tool for reftting piston coolers.

I - RECOMMENDATIONS FOR REPAIR

IMPORTANT
Wear protective gloves during every operation.

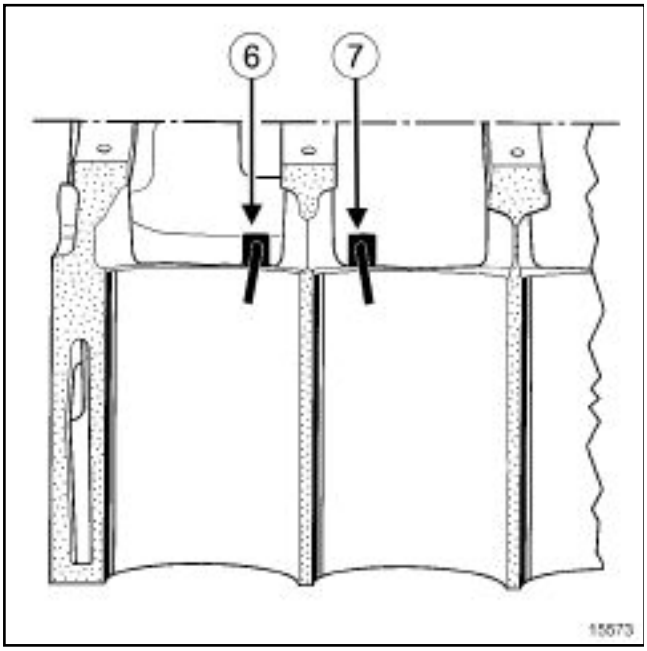

15573

(**6**) orientation of the piston base cooling jets for cylinders 2 and 4,

(**7**) orientation of the piston base cooling jets for cylinders 1 and 3,

WARNING
Check the orientation of the base of the piston base cooling jet which should be aimed towards the centre of the cylinder.

II - PARTS AND CONSUMABLES FOR THE REPAIR

Parts always to be replaced

- the piston base cooling jets,

III - EQUIPMENT REQUIRED

- A hammer.

IV - REFITTING THE PISTON BASE COOLING JETS

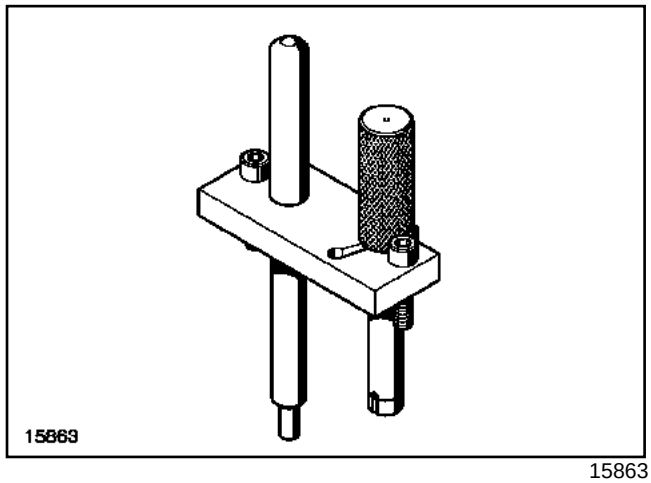

15863

The piston base cooling jets must be replaced using the **(Mot. 1494)** .

1 - Fitting the jets for cylinders 1 and 3

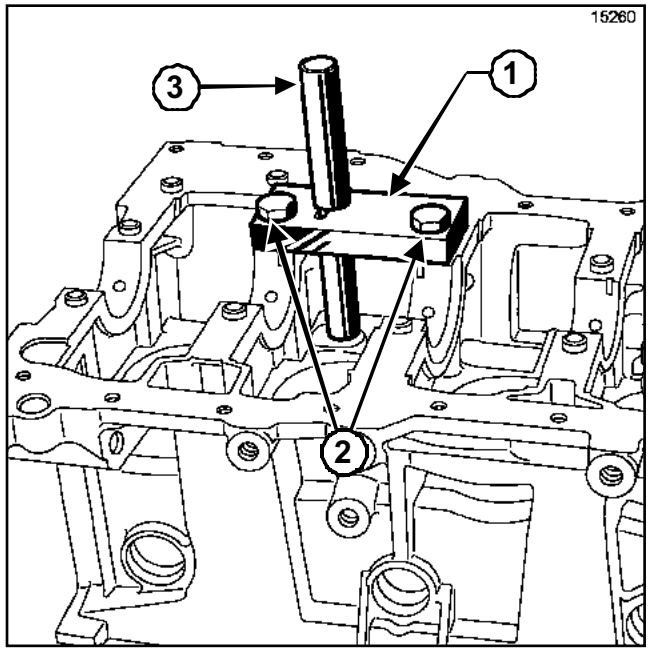

15260

Position plate (**1**) of tool **(Mot. 1494)** on the cylinder block without tightening the two bolts (**2**) .

Place the guide rod (**3**) in the plate (**1**) .

Position the end of the guide rod in the hole of the piston base cooling jet to centre the plate (**1**) .

Lock the two bolts (**2**) .

Remove the guide rod.

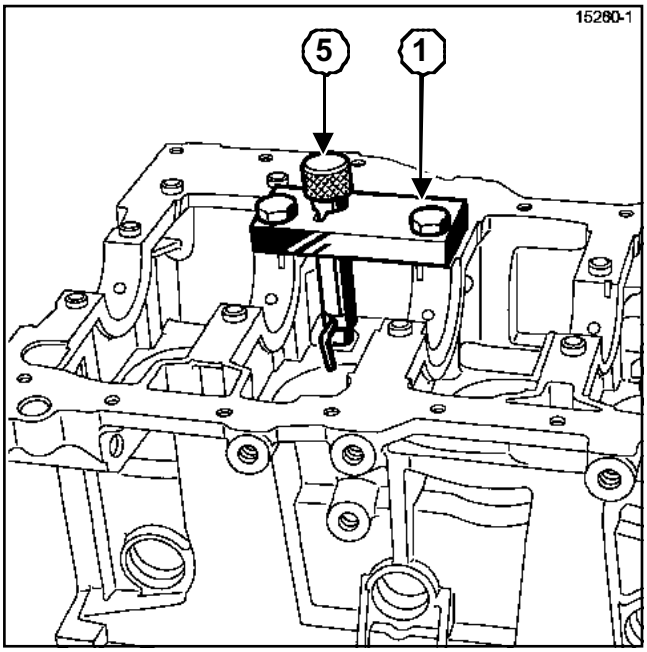

15260-1

Insert the pushrod in place of the guide rod.

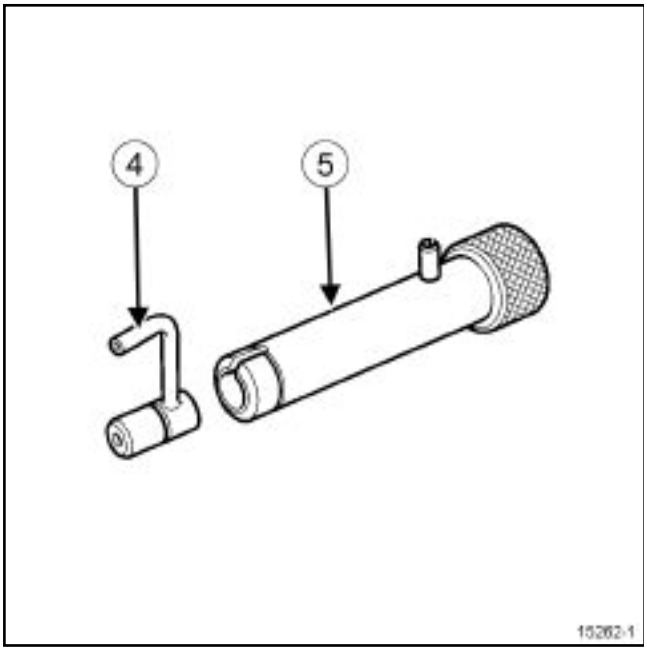

15262-1

Insert the jet (**4**) into the pushrod (**5**) .

Using a hammer, tap the pushrod down until the pushrod collar ***(5)*** is touching the plate ***(1)*** .

2 - Fitting the jets for cylinders 2 and 4

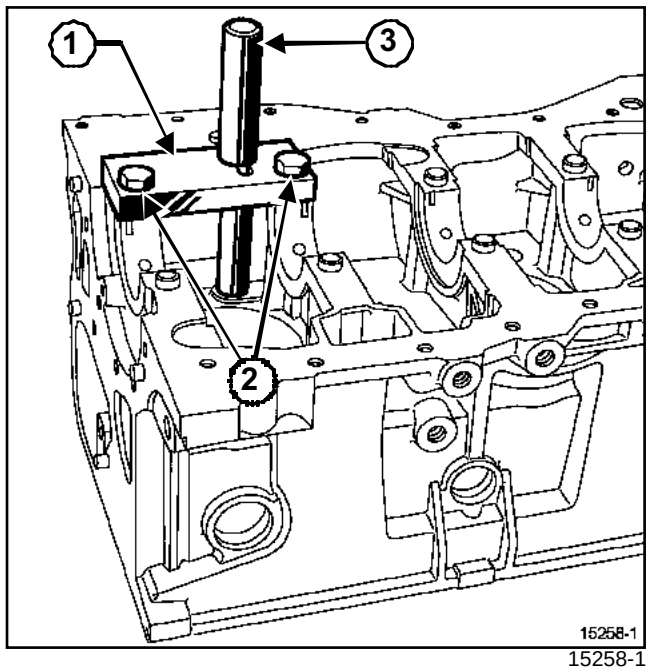

15258-1

Position plate (**1**) of the **(Mot. 1494)** on the cylinder block without tightening the two bolts (**2**) .

Place the guide rod (**3**) in the plate (**1**) .

Position the end of the guide rod in the hole of the piston base cooling jet to centre the plate (**1**) .

Tighten the two bolts (**2**) .

Remove the guide rod.

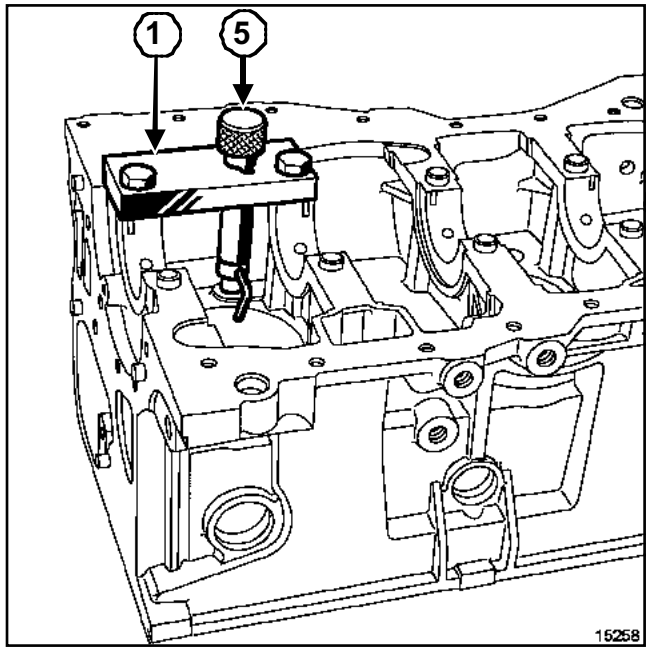

15258

Insert the pushrod in place of the guide rod.

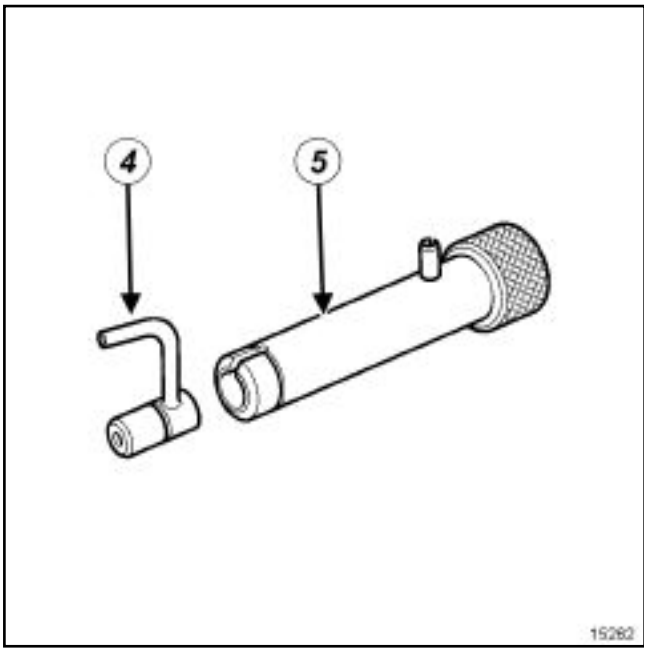

15262

Insert the jet (**4**) into the pushrod (**5**) .

Using a hammer, tap the pushrod down until the pushrod collar ***(5)*** is touching the plate ***(1)*** .

Remove the **(Mot. 1494)** from the cylinder block.

Special tooling required	
Mot. 1493-01	Crankshaft bearing centring tool.
Mot. 1319-01	Gauge for measuring height of crankpins.
Mot. 1489	TDC locating pin.
Mot. 1319	Gauge for measuring height of crankpins.
Mot. 1492	Tool for fitting main bearing shells.
Mot. 1492-03	Tool for fitting main bearing shells.
Mot. 252-01	Dial gauge support thrust plate.
Mot. 251-01	Dial gauge support.

Tightening torques ▽	
the crankshaft bearing cap mounting bolts	**25 ± 2.5 Nm + 47° ± 6°**
the con rod cap mounting bolts	**20 ± 2 Nm + 45° ± 6°**

I - RECOMMENDATIONS FOR REPAIR

IMPORTANT
Wear protective gloves during every operation.

WARNING
The sealing surfaces must be clean, dry and free from grease (avoid finger marks).

Applying excess sealant could cause it to be squeezed out when parts are tightened. A mixture of sealant and fluid could damage certain components (engine, radiator, etc.)

The con rod caps are positioned on the con rod body using the irregularities on the parting line.

Impacts or foreign bodies between the contact surfaces between the caps - con rod body could lead to a breakage of the con rod in the short term.

II - PARTS AND CONSUMABLES FOR THE REPAIR

Parts always to be replaced

- Con rod cap bolts,
- Crankshaft bearing cap bolts.

Consumables

- Loctite 518, part no. **77 01 421 162** ,
- Degreasing agent, part no. **77 11 224 559** .

III - EQUIPMENT REQUIRED

- Female torx socket.
- Allen key (**8 mm**),
- Oil can,
- Dial gauge,
- Flat-blade screwdriver,
- Indelible pencil,
- Piston ring compressor,
- Piston mounting ring,
- Torque/angle wrench,
- Torque wrench
- Cylinder head bolt tightening gauge (angular measuring type),
- Mallet,

IV - REFITTING THE ROTATING PARTS

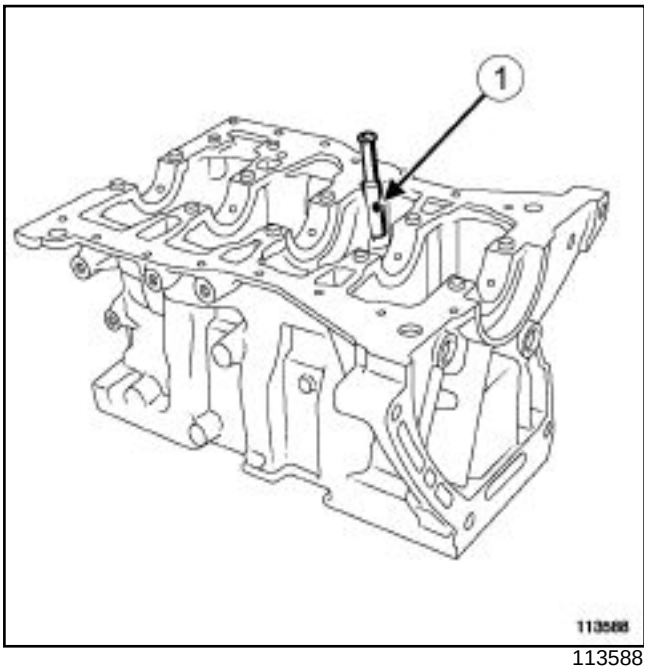

113588

Replace the dipstick guide tube in the cylinder block (if the cylinder block is fitted with one), aligning the orifice (**1**) of the dipstick guide tube as indicated in the diagram.

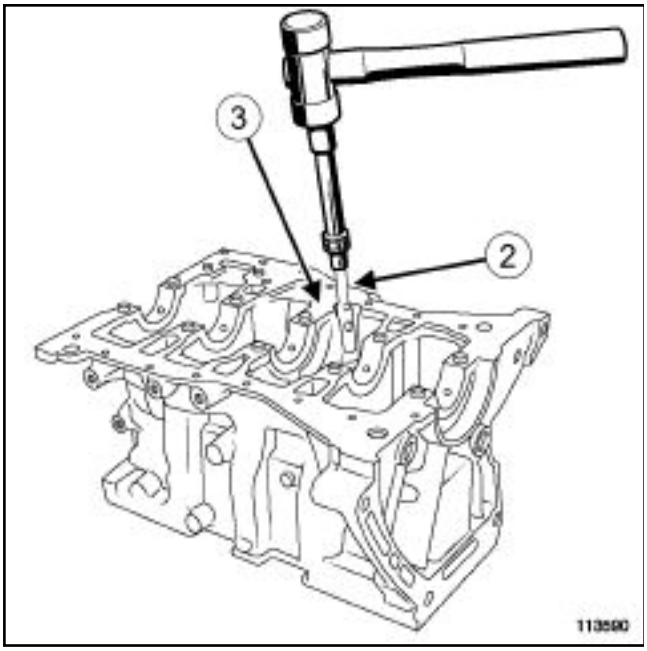

113590

Insert the dipstick guide tube using an **8 mm** male Allen key, until the dipstick guide tube extends by **43 mm** (the end) (**2**) over the sealing surface (**3**) of the cylinder block.

Ensure that the crankshaft bearing journals are matched up with the crankshaft bearings on the cylinder block (see **10A**, **Engine and lower engine assembly**, **Engine peripherals: Specifications**, page **10A-36**) .

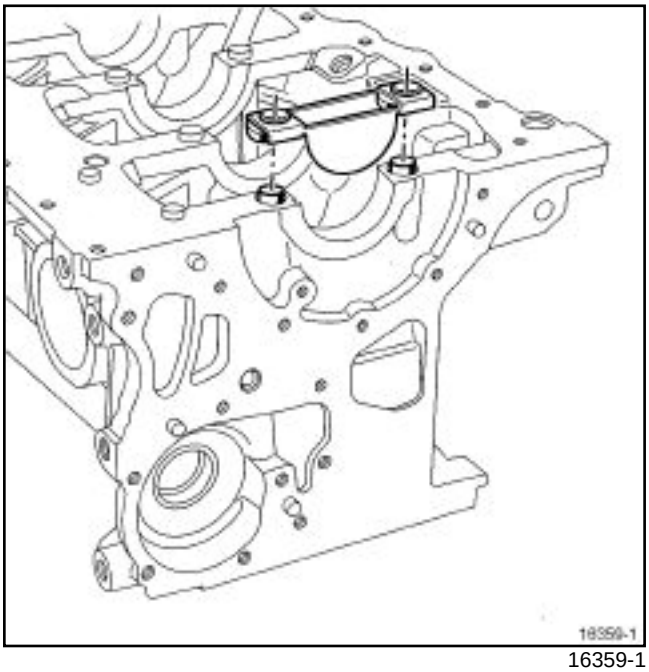

16359-1

Position the **(Mot. 1493-01)** on the cylinder block.

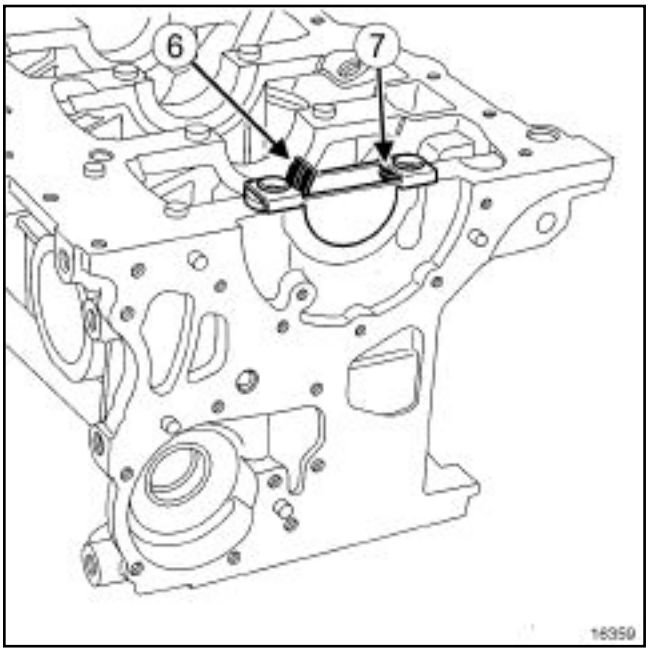

16359

Mount the bearing shell **(grooved)** (**6**) in the **(Mot. 1493-01)** .

Push on the bearing until it is pressed against the stop (**7**) .

Repeat this process for other bearings.

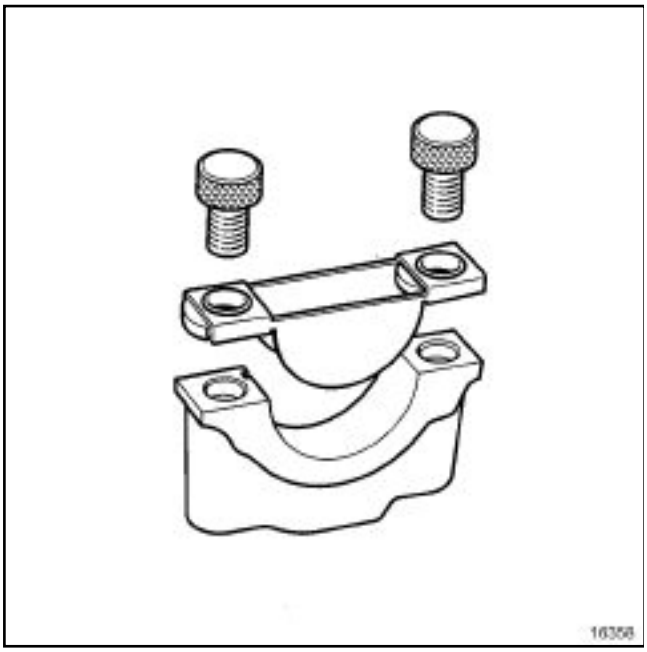

16358

Position the **(Mot. 1493-01)** on the crankshaft bearing cap.

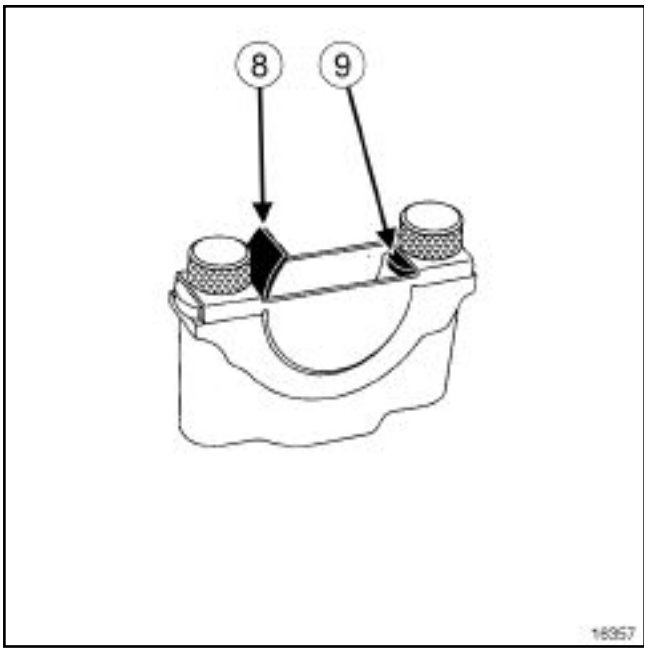

16357

Place the bearing shell **(non-grooved)** (**8**) in the **(Mot. 1493-01)** .

Push on the bearing until it is pressed against the stop (**9**) .

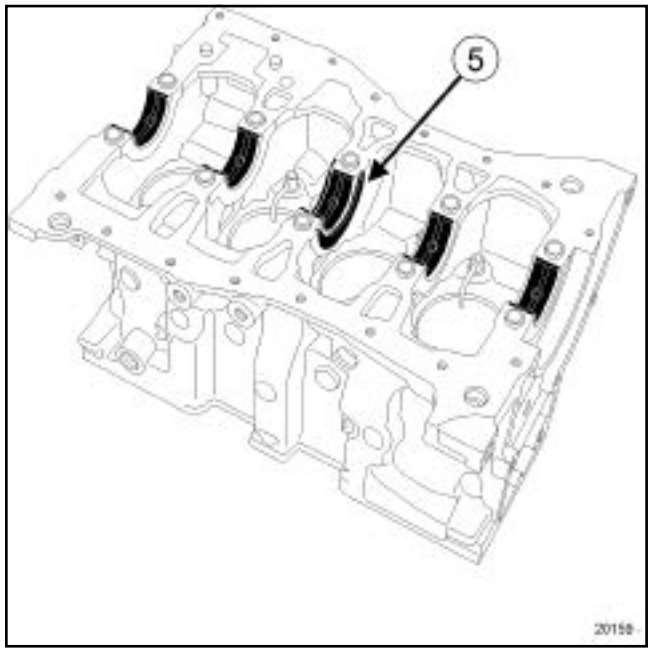

20159

Refit the crankshaft thrust washers **positioning the grooves of the shims at crankshaft end** .

Oil the crankshaft bearing shells with engine oil (only the side of the bearing shell that comes in contact with the crankshaft).

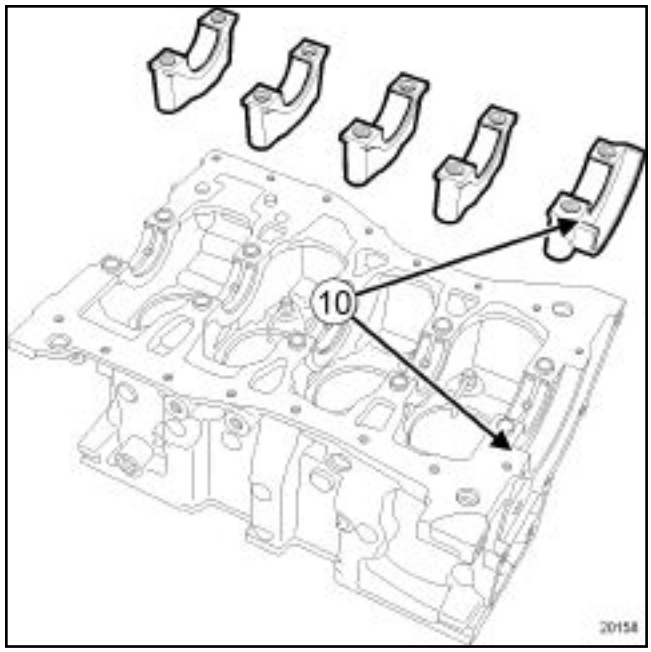

20158

Degrease the surfaces of the seals (**10**) of the cylinder block and the crankshaft bearing cap No. 1 using degreaser.

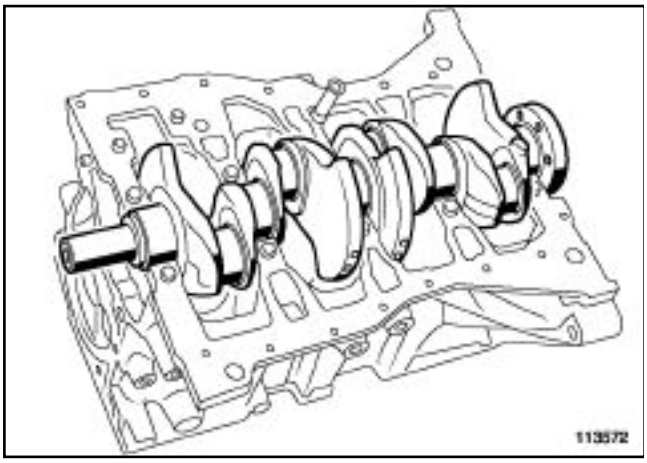

113572

Refit the crankshaft.

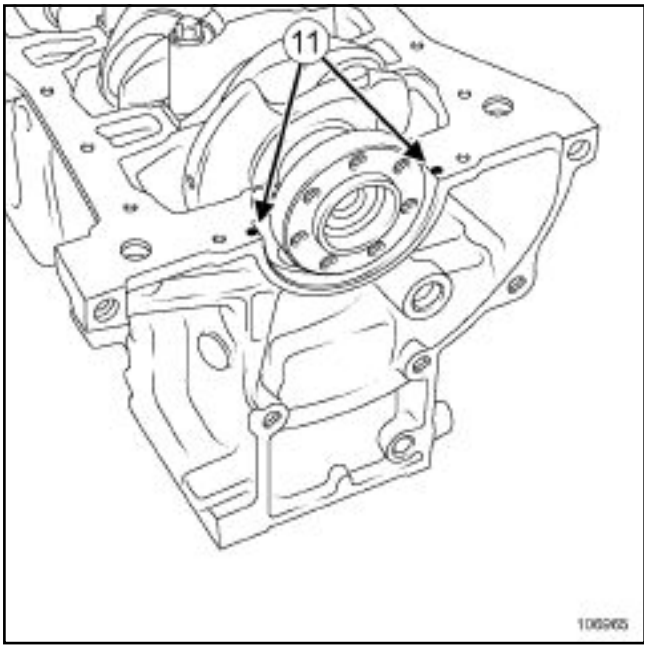

106965

Apply two drops (**11**) of **LOCTITE 518** of a diameter of **4 mm** to camshaft bearing no. 1.

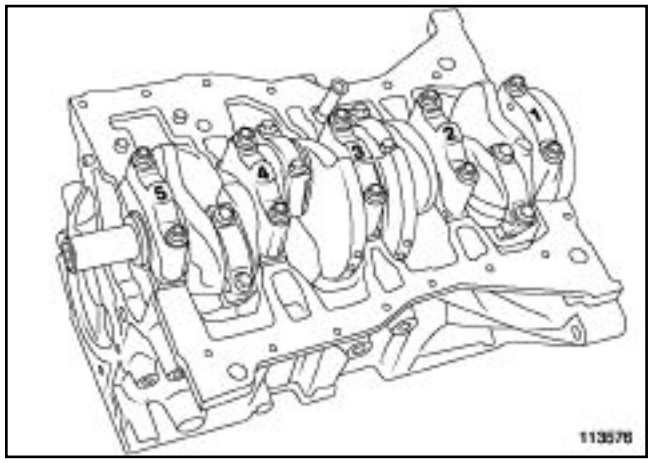

113576

Refit the crankshaft bearing caps, ensuring that they are correctly positioned.

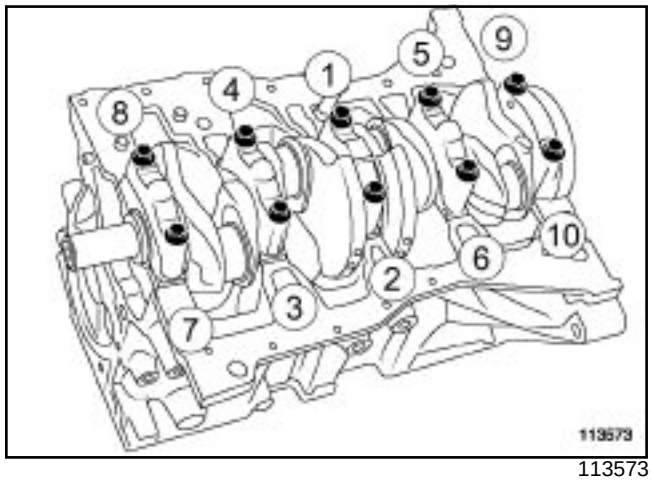

113573

Refit the new crankshaft bearing cap mounting bolts.

Tighten to torque in order and to angle **the crankshaft bearing cap mounting bolts (25 ± 2.5 Nm + 47° ± 6°)** .

Check that the crankshaft turns freely, with no resistance.

Note:

If replacing the con rods, the Parts Department will only supply con rods with a small end diameter of **26 mm** .

It is therefore essential to check that the gudgeon pin is **26 mm** in diameter.

It is essential to determine the height of the crankpin ***(X1)*** in the event of having to replace the con rods, crankshaft, cylinder block.

The height ***(X1)*** represents the distance between the crankpin at TDC and the surface of the seal on the combustion face of the cylinder block.

This measurement enables the piston class to be determined.

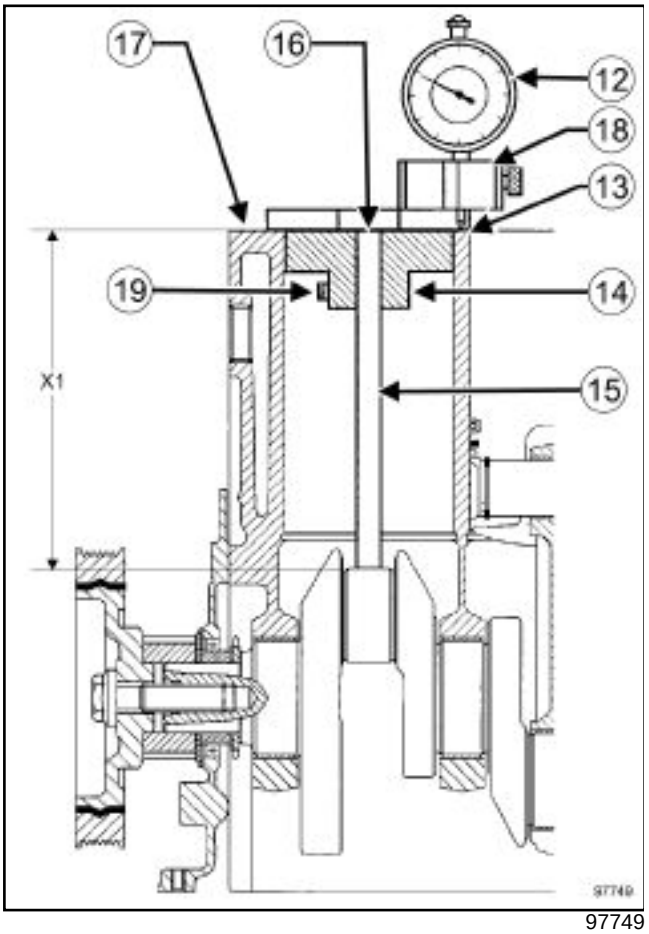

97749

Measuring the crankpin height for cylinders 1 and 4:

Insert the appropriate depth gauge of tool **(Mot. 1319-01)** (**15**) in the dummy piston (**14**) of the tool, **(Mot. 1319-01)** lining up the light of the depth gauge opposite the locking bolt (**19**) .

Tighten the locking bolt (**19**) .

Check that the depth gauge slides freely in the dummy piston.

Set the crankshaft at Top Dead Centre using the **(Mot. 1489)** .

Position the dummy piston ***(14)*** of the the **(Mot. 1319-01)** fitted with the depth gauge in cylinder No. 1.

Position the depth gauge ***(15)*** of the tool, **(Mot. 1319-01)** pressing on the crankshaft crankpin.

Place the dial gauge holder ***(18)*** of the **(Mot. 1319)** with dial gauge in place on the dummy piston ***(14)*** .

Calibrate the dial gauge ***(12)*** on the cylinder block, setting the mid-point between points ***(13)*** and ***(17)*** .

Slide the dial gauge holder to the centre ***(16)*** of the depth gauge ***(15)*** .

Measure the protrusion or recess of the depth gauge.

Note the value.

Carry out the same procedure for cylinder No. 4.

Measuring the crankpin height for cylinders 2 and 3:

Position approximately the crankpin for crankshaft No. 2 at Top Dead Centre.

Place the dummy piston-depth gauge assembly into cylinder No. 2.

Place the dial gauge holder, with dial gauge in place, in the centre of the depth gauge.

Gently turn the crankshaft to determine the crankpin top dead centre.

Calibrate the dial gauge ***(12)*** on the cylinder block, setting the mid-point between points ***(13)*** and ***(17)*** .

Slide the dial gauge holder to the centre ***(16)*** of the depth gauge ***(15)*** .

Measure the protrusion or recess of the depth gauge.

Note the value.

Carry out the same procedure for cylinder No. 3.

Determine the class of piston

Add or subtract the values obtained of the length of the depth gauge in order to determine the dimension ***(X1)*** .

For example:

- length of depth gauge = **153.989 mm** ,
- measured protrusion (of the length of the depth gauge beyond the cylinder block) = **0.65 mm** ,
- the dimension ***(X1)*** = **153.989** - **0.65** = **153.339 mm** (in the event of a recess, the figures must be added).

Determine **the height of the gudgeon pin** using the following formulae:

- For engines fitted with a gudgeon pin of diameter **25 mm** use formula (***(X1)*** - **111.535** = the height of the gudgeon pin),

- For engines fitted with a gudgeon pin of diameter **26 mm** use formula (***(X1)*** - **111.576** = the height of the gudgeon pin),

Refer to the height classes table for the gudgeon pins in order to choose the correct piston class (see **10A**, **Engine and lower engine assembly**, **Engine peripherals: Specifications**, page **10A-36**) .

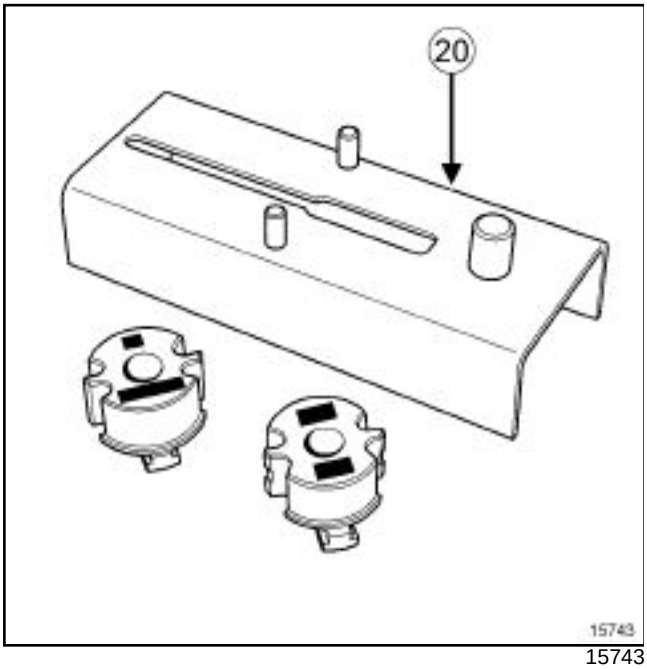

15743

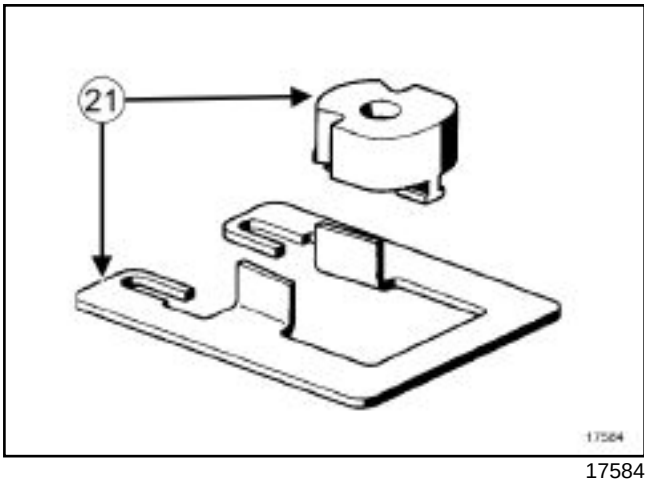

17584

Fit the con rod bearings using the **(Mot. 1492)** (**20**) and **(Mot. 1492-03)** (**21**) .

Refitting the con rod bearings on the con rod body.

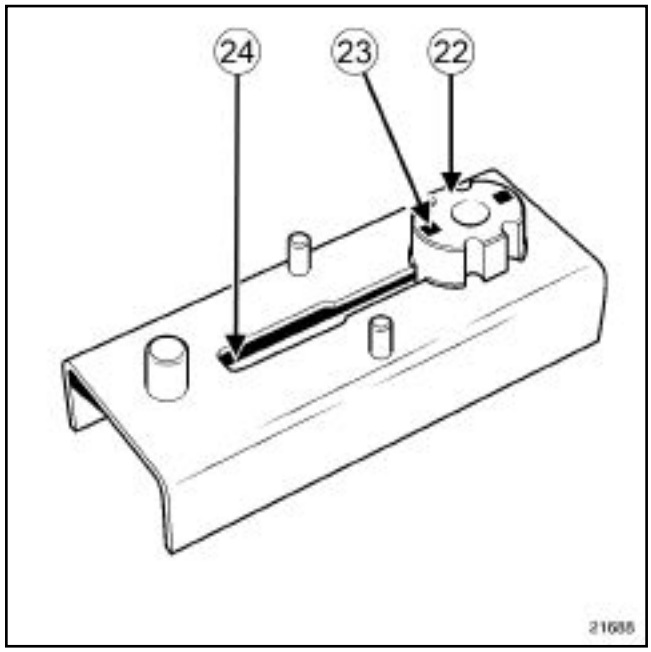

21688

Slide the bearing support (**22**) (positioning the marking "A" (**23**) as indicated in the diagram) of the tool **(Mot. 1492-03)** in the groove (**24**) of the tool base **(Mot. 1492)** .

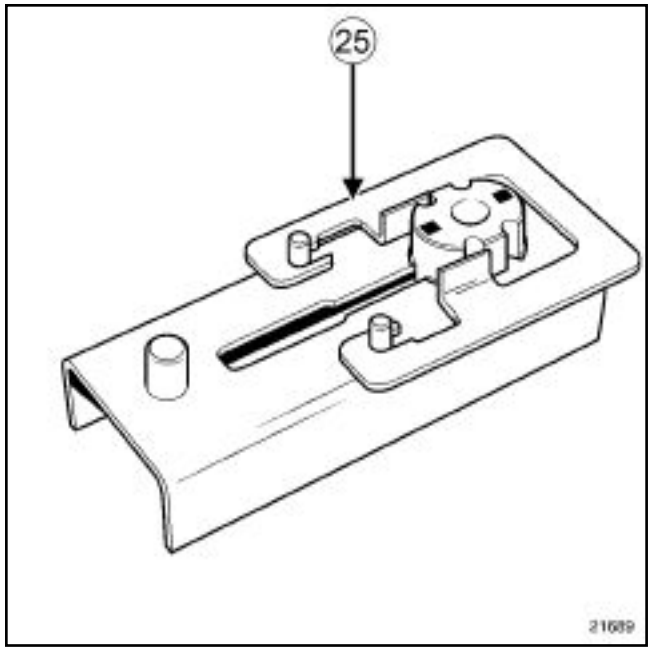

21689

Place the rail (**25**) of the tool **(Mot. 1492-03)** on the base.

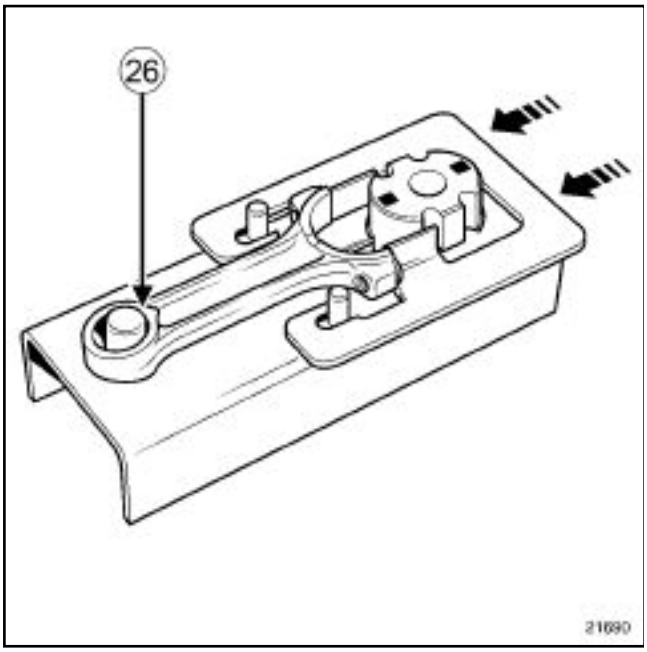

21690

Mount the con rod body on the base.

Check that the lower part (**26**) of the small end is in contact with the centring pin.

Push the rail (in the direction shown by the arrow) until the rail presses against the con rod end.

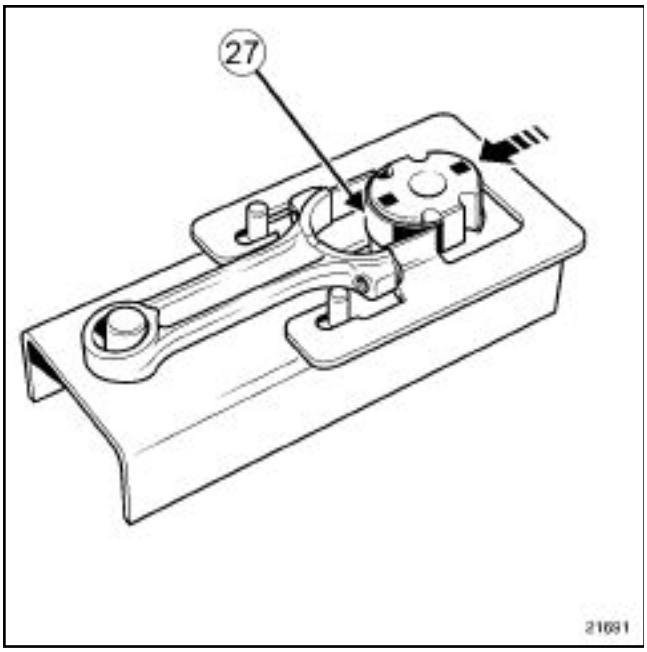

21691

Mount the bearing shell (**27**) (with a width of **20.625 mm** on the bearing shell support.

Push the bearing shell support in the direction shown by the arrow.

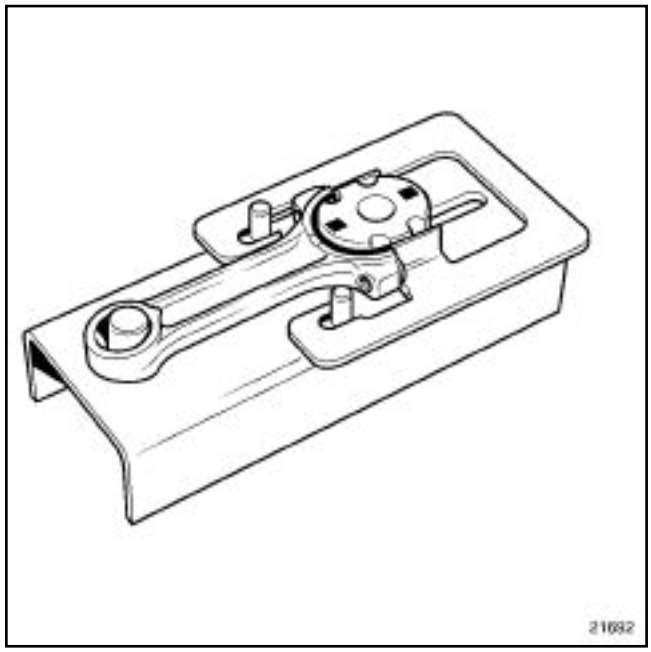

21692

Bring the bearing shell support to the end of the con rod body base.

Remove the support shell from the con rod body.

Repeat the operation for the other con rod bodies.

Refitting the con rod bearings on the con rod cap.

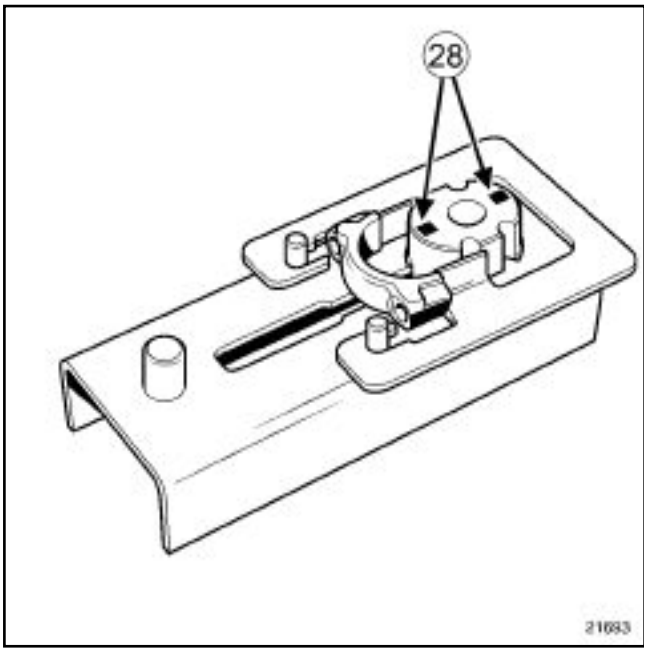

21693

Position the bearing shell support, aligning the marking "A" or "B" (**28**) on the side of the cap as follows:

- a bearing shell width of **20.625 mm** corresponds to "A",
- a bearing shell width of **17.625 mm** corresponds to "B",

Mount the con rod cap on the base.

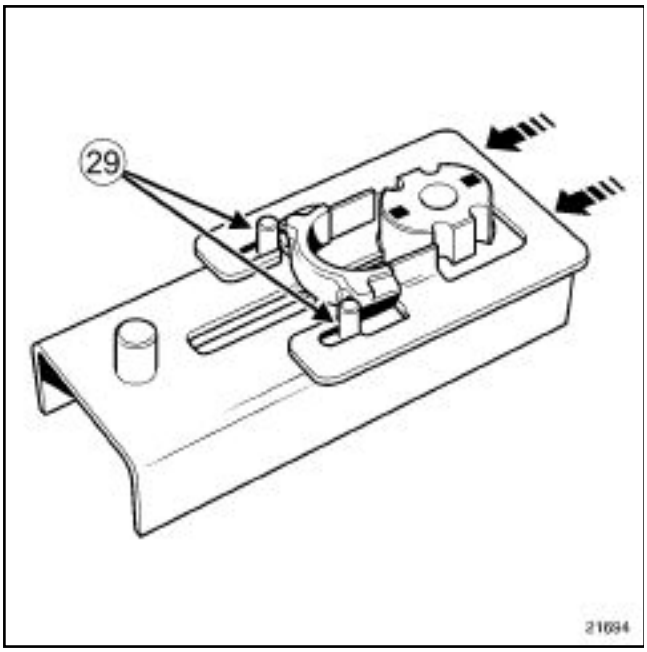

21694

Push the rail in the direction shown by the arrow until the con rod cap presses against the pins (**29**) on the base.

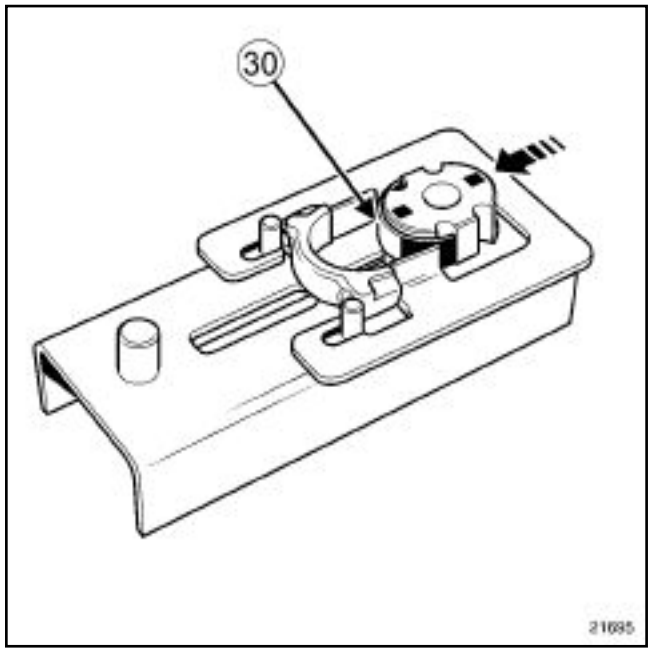

21695

Mount the bearing shell (**30**) on the bearing shell support.

Push the bearing shell support in the direction shown by the arrow.

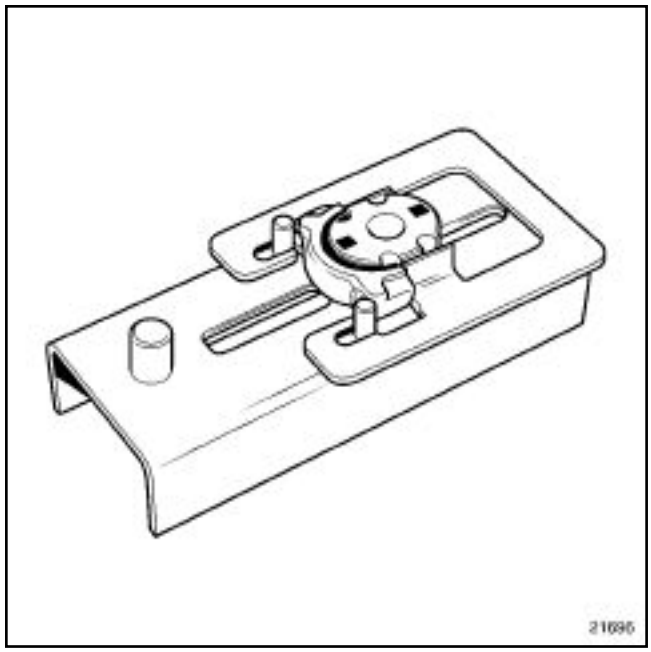

21696

Bring the bearing shell support to the end of the con rod cap base.

Remove the bearing shell from the con rod cap.

Repeat the operation for the other con rod caps.

Using an indelible pencil, mark the gudgeon pin position in relation to the piston.

Lubricate gudgeon pin with engine oil.

Check that the gudgeon pin slides and turns freely in the piston.

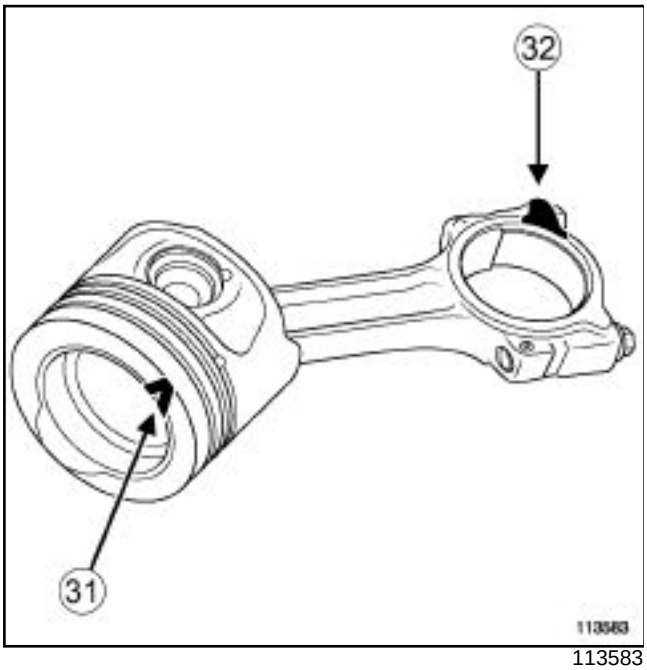

113583

Position the mark **"V"** (**31**) of the piston and the flat surface (**32**) of the con rod cap as indicated in the illustration.

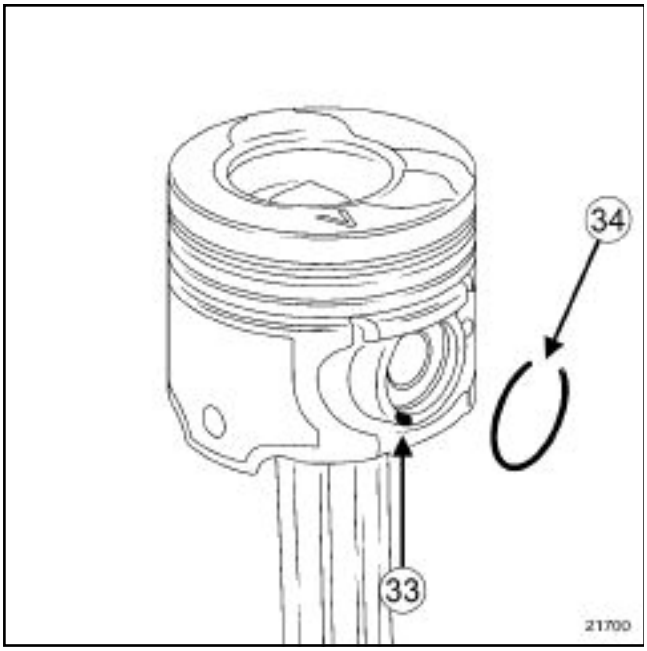

21700

Refit the circlip of the gudgeon pin, positioning the opening (**34**) of the circlip opposite the notch (**33**) .

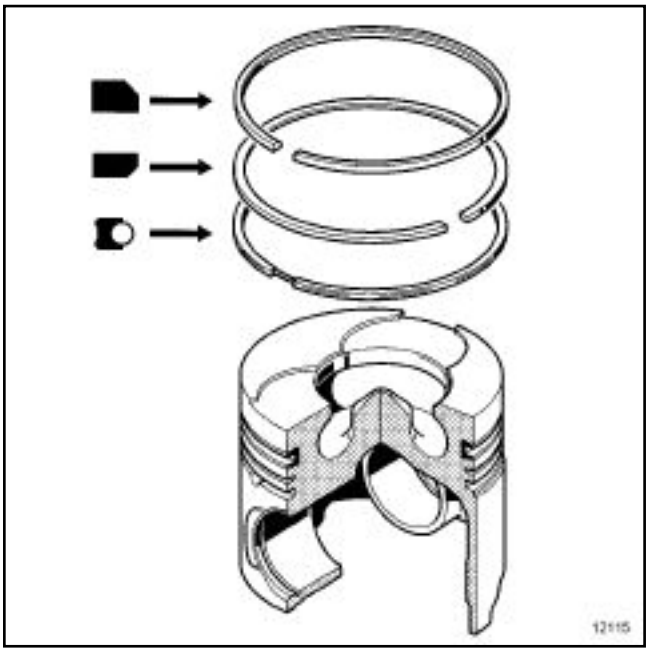

12115

Note:

Ensure the rings are fitted the right way round, with the word **TOP** pointing upwards.

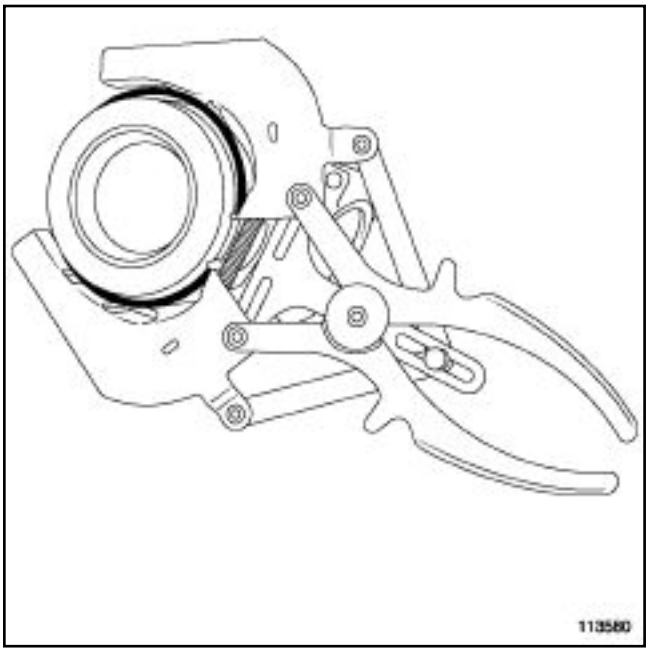

113580

Refit the piston rings using a piston ring compressor.

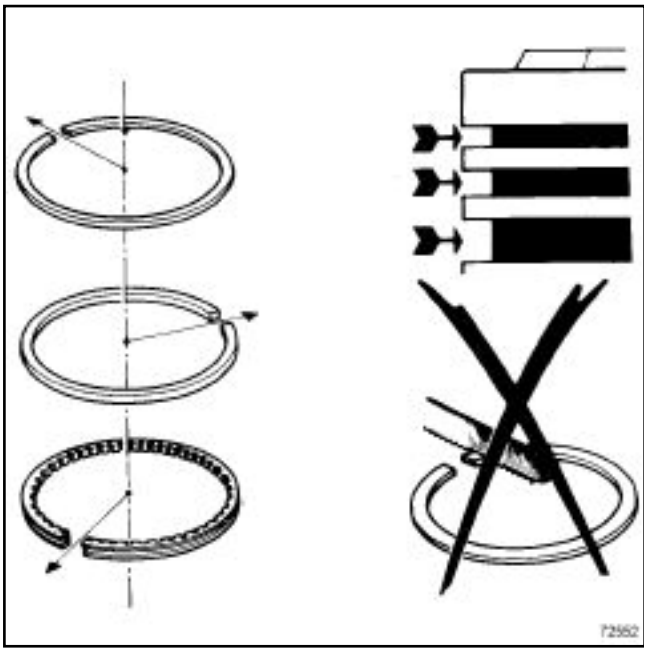

72552

Fit the shoes such that the gaps are equally spaced around the piston.

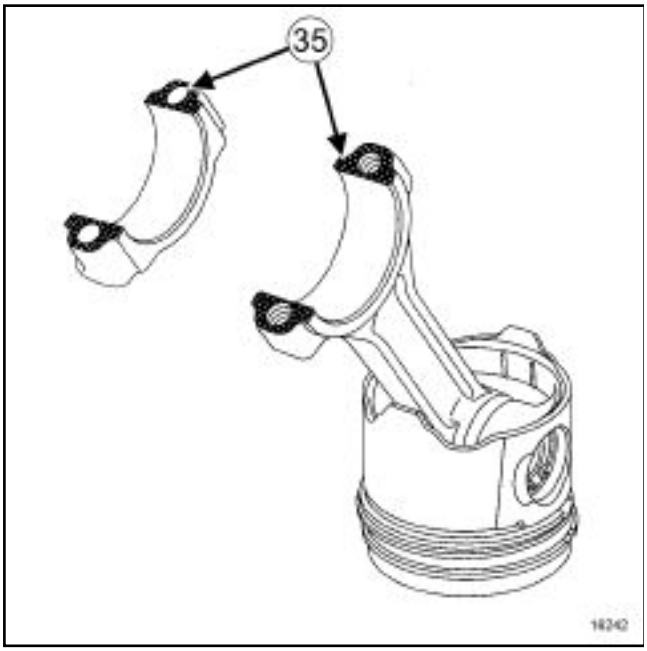

16242

Using degreasing agent, degrease the contact surfaces (**35**) between the cap and body of the con rod.

Lubricate with engine oil:

- the cylinder block barrels,
- the piston rings,
- the piston skirts,
- the crankshaft crankpins.

Note:

Ensure that the piston matches the cylinder block barrel (No.1 at flywheel end) .

Ensure the correct con rod-piston orientation, positioning the "V" engraved on the piston crown towards the flywheel .

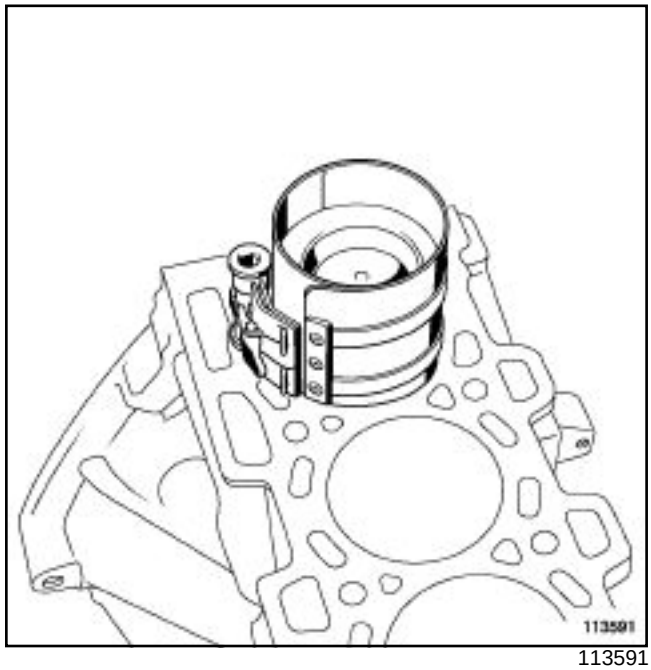

113591

Refit the con rod-piston assembly using a piston assembly ring.

Mount the con rod heads on the crankshaft crankpins.

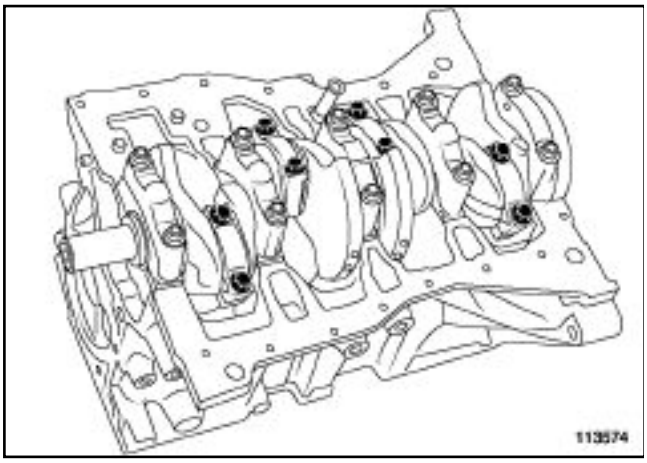

113574

Refit:

- the con rod caps, ensuring correct matching,

- the new con rod cap mounting bolts.

Torque and angle tighten **the con rod cap mounting bolts (20 ± 2 Nm + 45° ± 6°)** .

Check that the running gear turns freely, with no resistance.

Clean the piston crowns.

Set the crankshaft at Top Dead Centre.

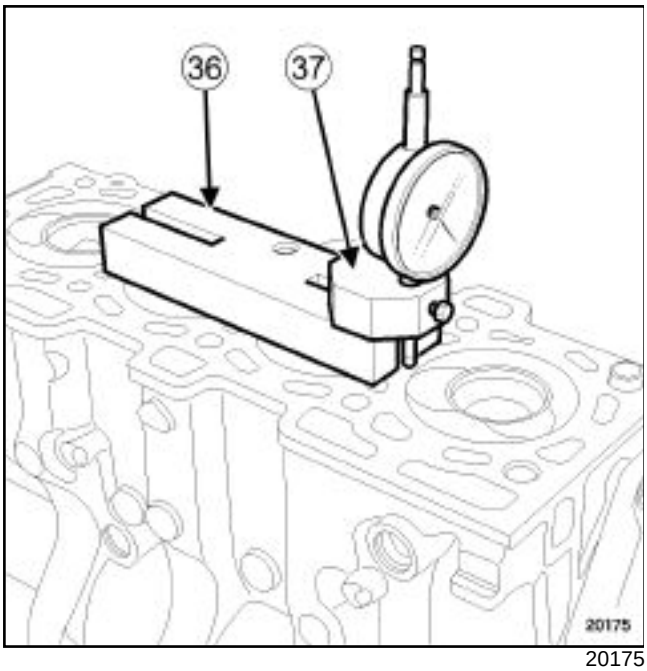

20175

Mount the contact plate of the **(Mot. 252-01)** (**36**) on the cylinder block.

Mount the dial gauge support **(Mot. 251-01)** (**37**) , with a dial gauge, on the pressure plate.

Note:

The measurement is taken along the longitudinal axis of the crankshaft to eliminate play due to the movement of the piston .

Calibrate the dial gauge on the cylinder block.

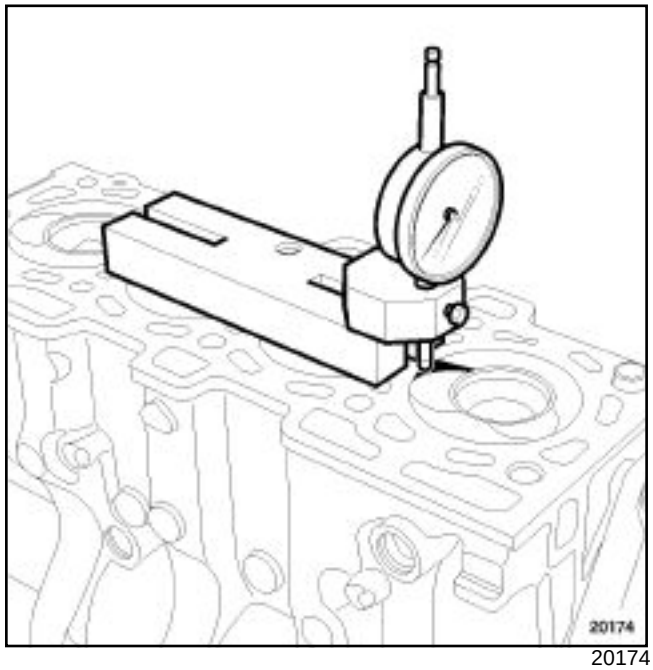

20174

Measure the recess **(the sensor of the dial gauge should not be in a valve gap)** of the piston which should be:

- For engines **K9K 260-700-702-704-710-722 fitted with a gudgeon pin 25 mm in diameter** the recess is **0.192 ± 0.093 mm** ,

- For engines **K9K 260-270-272-700-702-704-706-710-722-750-752-790 fitted with a gudgeon pin 26 mm in diameter** the recess is **0.154 ± 0.130 mm** ,

- For engines **K9K 274-276-712-714-716-718-724-728-729-732-760-766-768-792-762-764 fitted with a gudgeon pin 26 mm in diameter** the recess is **0.159 ± 0.129 mm** ,

For cylinders No. 2 and No. 3, it is essential to find the Top Dead Centre of the piston before taking the recess measurement.

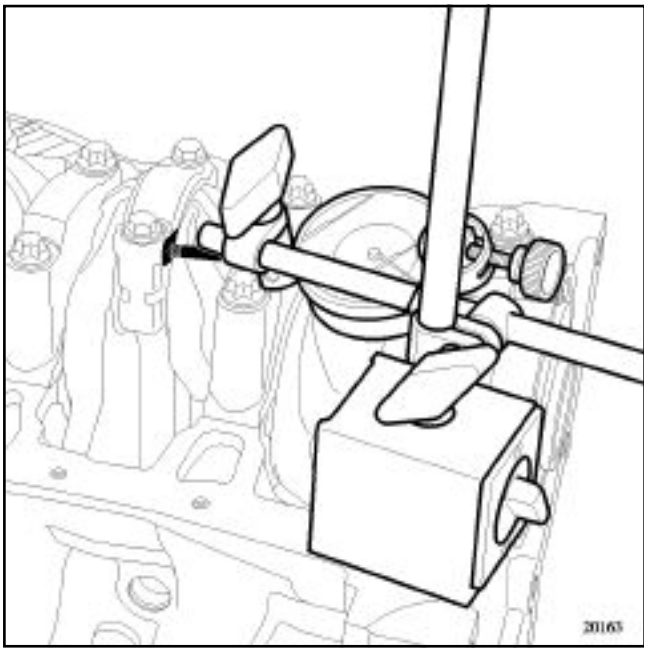

20163

Check the longitudinal clearance of the big ends, which must be between **0.205 and 0.467 mm** .

K9K, and 260 or 270 or 272 or 700 or 702 or 704 or 706 or 710 or 722 or 750 or 752 or 790

Special tooling required	
Mot. 1018	Sump plug tool.
Mot. 1586	Tool for fitting PTFE crankshaft seal, timing end.
Mot. 1714	Adapter for fitting PTFE crankshaft seal, timing end.
Mot. 1585	Tool for fitting PTFE crankshaft seal, flywheel end.
Emb. 1596	24 mm socket for removing/refitting clutch master cylinder.
Mot. 1329	Oil filter removing tool (76 mm diameter).
Mot. 923	Engine lifting ring.
Mot. 582-01	Flywheel locking tool.
Mot. 1677	Flywheel locking tool.
Emb. 1780	Set of clutch disc centring mandrels.

Tightening torques ▽	
the oil pump mounting bolts	**25 ± 2.5 Nm**
the oil level sensor	**25 ± 2.5 Nm**
the crankshaft nose closure unit mounting bolts	**11 ± 1.1 Nm**
the coolant pump mounting bolts	**11 ± 1.1 Nm**
the engine oil sump mounting bolts	**14 ± 1.4 Nm**
the drain plug of the engine oil sump	**20 ± 2 Nm**
the coolant pump pipe mounting bolt	**22 ± 2.2 Nm**
the coolant / oil heat exchanger mounting bolt	**45 ± 4.5 Nm**

Tightening torques ▽	
the oil filter holder mounting bolt	**45 ± 4.5 Nm**
the acceleration meter	**20 ± 2 Nm**
the oil pressure switch	**30 ± 3 to 35 ± 3.5 Nm**
the oil filter	**14 ± 2 Nm**
the multifunction support mounting bolts (from 1 to 6 or from 1 to 5)	**44 ± 4.4 Nm**
multifunction support mounting bolt (7)	**21 ± 2.1 Nm**
the mounting bolts of the power assisted steering pump or the dummy pulley	**21 ± 2.1 Nm**
the air conditioning compressor mounting bolts	**21 ± 2.1 Nm**
the alternator mounting bolts	**21 ± 2.1 Nm**
the coolant / oil heat exchanger mounting bolt	**45 ± 4.5 Nm**
the oil filter holder mounting bolt	**45 ± 4.5 Nm**
the acceleration meter	**20 ± 2 Nm**
the oil pressure switch	**30 ± 3 to 35 ± 3.5 Nm**
oil filter	**14 ± 2 Nm**
flywheel mounting bolts	**55 ± 5.5 Nm**
the clutch mechanism mounting bolts	**M6 to 14 ± 1.4 Nm and bolts M7 to 20 ± 2 Nm**

I - RECOMMENDATIONS FOR REPAIR

IMPORTANT
Wear protective gloves during every operation.

K9K, and 260 or 270 or 272 or 700 or 702 or 704 or 706 or 710 or 722 or 750 or 752 or 790

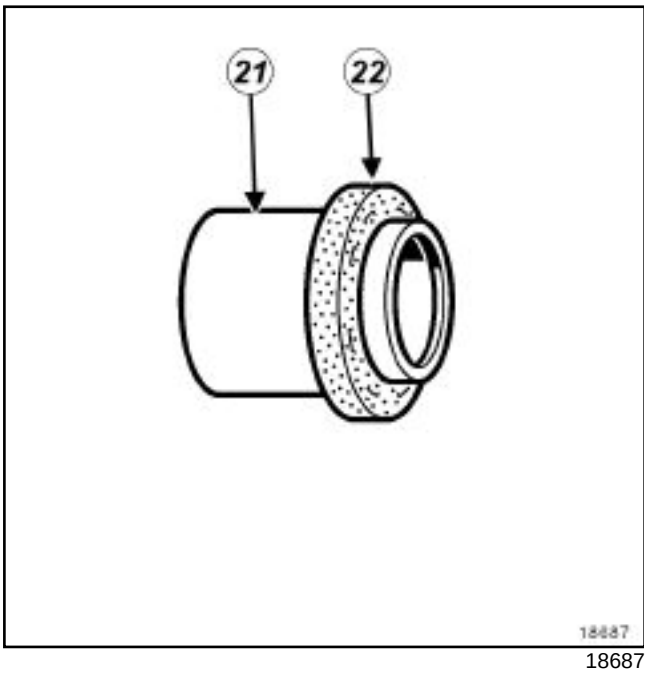

18687

WARNING

This type of seal is very delicate. When handling, it is essential to hold the protective piece (**21**) . It is strictly forbidden to touch seal (**22**) ; this is to prevent any oil leaks once the oil seal is fitted to the engine.

The sealing surfaces must be clean, dry and free from grease (avoid finger marks).

Applying excess sealant could cause it to be squeezed out when parts are tightened. A mixture of sealant and fluid could damage certain components (engine, radiator, etc.)

II - PARTS AND CONSUMABLES FOR THE REPAIR

Parts always to be replaced

- The crankshaft nose closure unit seal,
- The coolant pump seal,
- The oil sump mounting seal,
- The clutch mechanism (if necessary),
- The friction disc (if necessary),
- Flywheel mounting bolt
- The coolant pump inlet pipe seal,
- The oil/coolant heat exchanger seals,
- The crankshaft seal, timing end,
- The crankshaft seal, flywheel end,
- Oil filter,
- The seal of the drain plug of the engine oil sump.

Consumables

- Degreasing agent, part no. **77 11 224 559** .
- Silicone adhesive sealant, part no. **77 11 227 484** ,
- High-resistance bolt locking product, part no. **77 11 230 112** ,

III - EQUIPMENT REQUIRED

- Torque/angle wrench,
- Torque wrench
- Cylinder head bolt tightening gauge (angular measuring type),
- Rule,
- Male triangular drive drain plug spanner **8 mm** ,
- Male torx socket.
- Oil can,
- Workshop hoist.

IV - REASSEMBLING THE CYLINDER BLOCK

Put a little engine oil from an oil can in the oil pump via the oil sump filter.

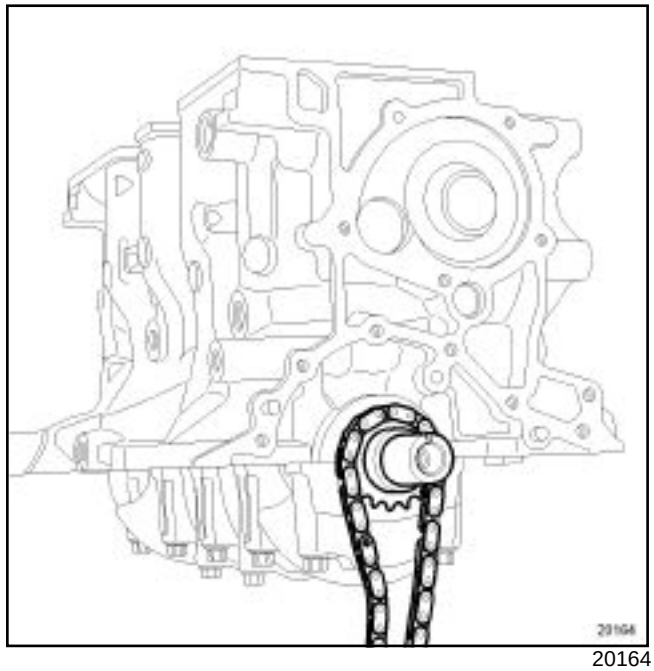

20164

Refit:

- the oil pump drive sprocket,
- the oil pump chain.

K9K, and 260 or 270 or 272 or 700 or 702 or 704 or 706 or 710 or 722 or 750 or 752 or 790

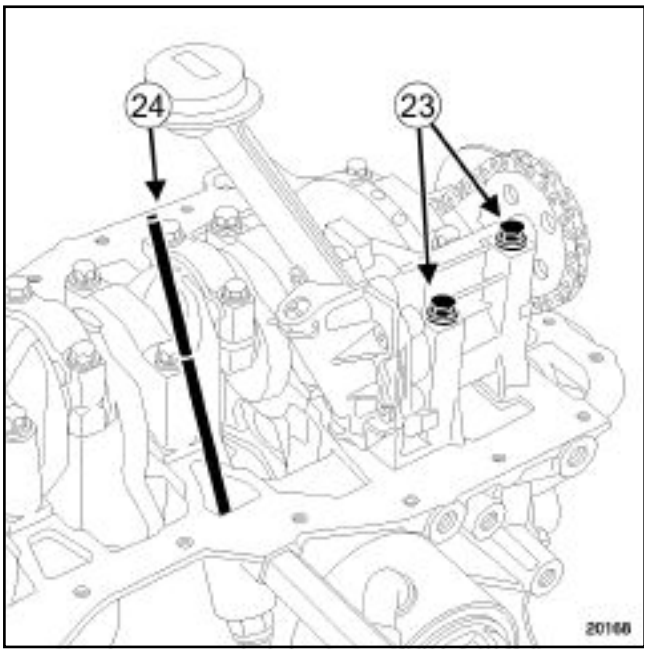

20168

Refit:

- the oil pump,
- the oil pump mounting bolts (**23**) ,
- the oil level sensor (**24**) .

Tighten to torque:

- **the oil pump mounting bolts (25 ± 2.5 Nm)** ,
- **the oil level sensor (25 ± 2.5 Nm)** .

Apply degreaser to:

- the crankshaft nose closure panel,
- the coolant pump,
- the surface of the seal of the crankshaft nose closure unit on the cylinder block,
- the surface of the coolant pump seal on the cylinder block.

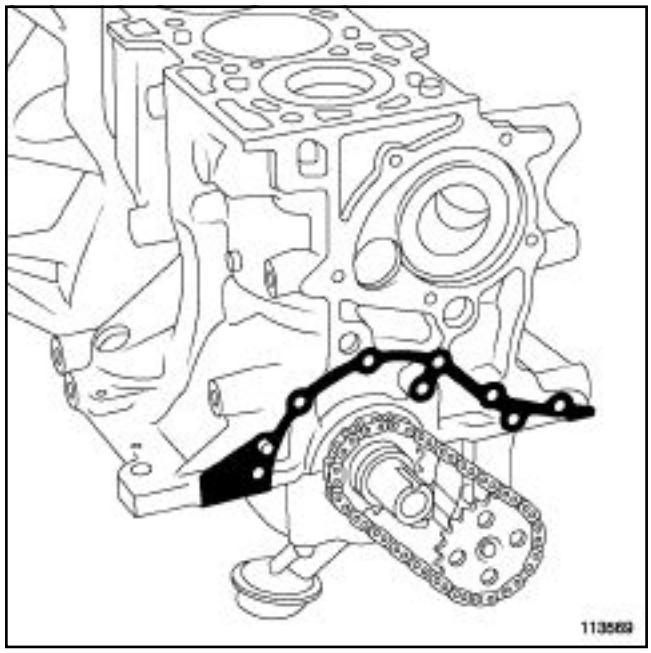

113569

Fit a new seal to the crankshaft nose closure unit.

Check for the centring dowels on the crankshaft nose closure unit.

K9K, and 260 or 270 or 272 or 700 or 702 or 704 or 706 or 710 or 722 or 750 or 752 or 790

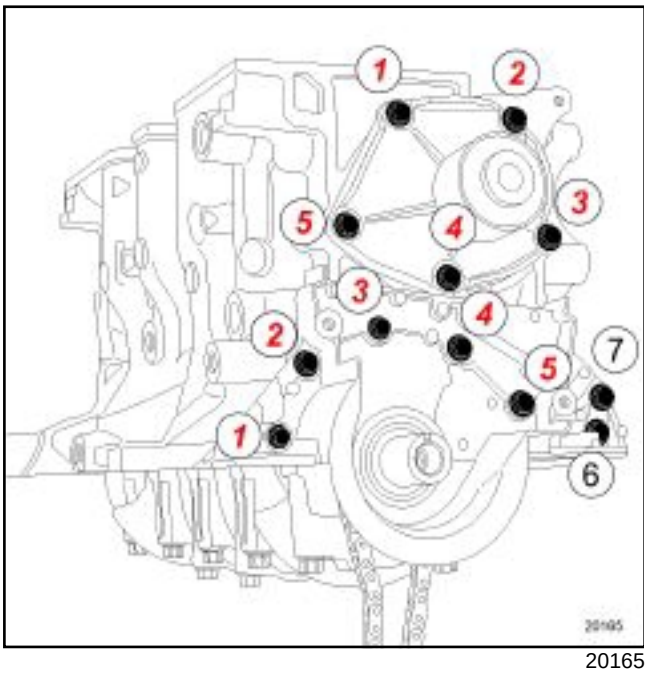

20165

Refit:

- the crankshaft nose closure unit,
- the crankshaft nose closure unit mounting bolt,

Tighten to torque and in order **the crankshaft nose closure unit mounting bolts (11 ± 1.1 Nm)** .

Apply a drop of **HIGH-RESISTANCE BOLT LOCKING PRODUCT** to the coolant pump mounting bolts.

Refit:

- the coolant pump fitted with a new seal,
- the coolant pump mounting bolts.

Tighten to torque and in order **the coolant pump mounting bolts (11 ± 1.1 Nm)** .

Using degreaser, degrease the seal surfaces of the lower part of the cylinder block and the oil sump.

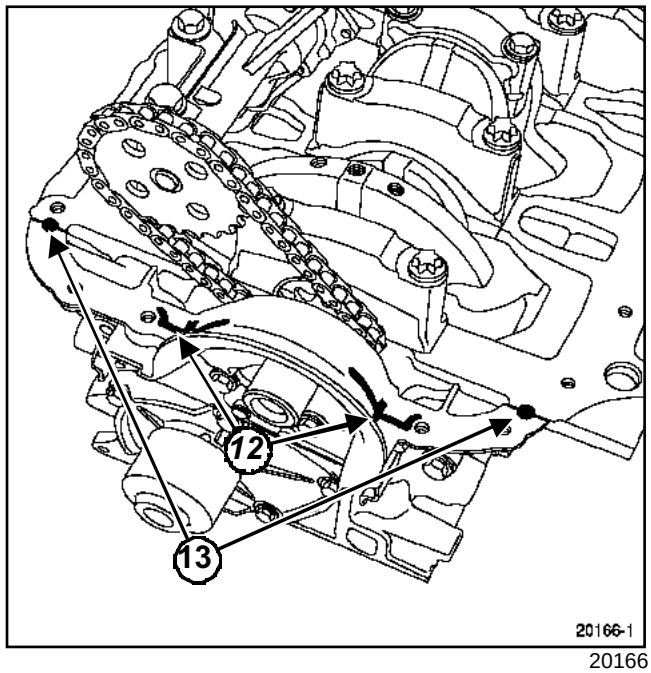

20166

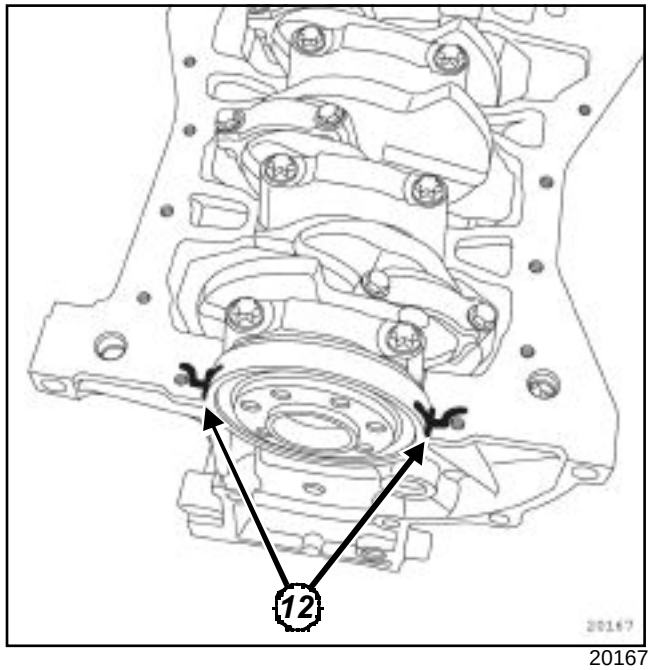

20167

Apply:

- four beads (**12**) of **SILICONE ADHESIVE SEALANT** with a diameter of **5 mm** ,
- two points (**13**) of **SILICONE ADHESIVE SEALANT 5 mm** in diameter, at the connection between the crankshaft nose closure panel and the cylinder block.

K9K, and 260 or 270 or 272 or 700 or 702 or 704 or 706 or 710 or 722 or 750 or 752 or 790

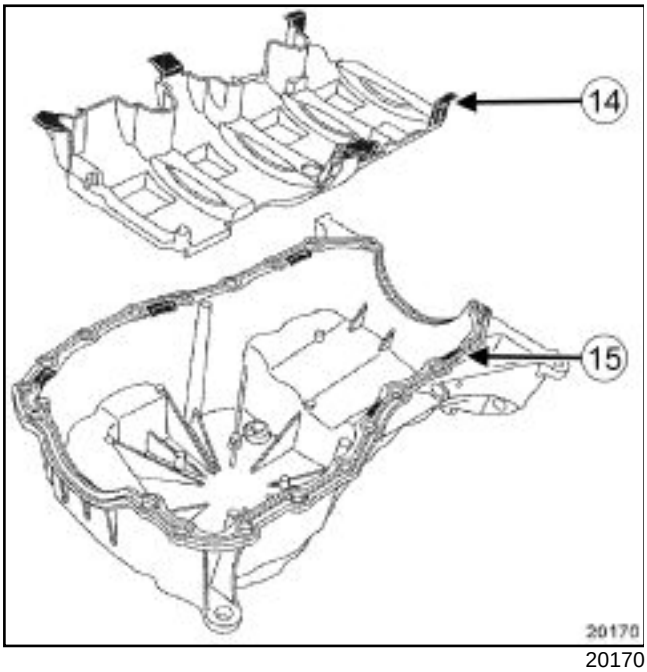

20170

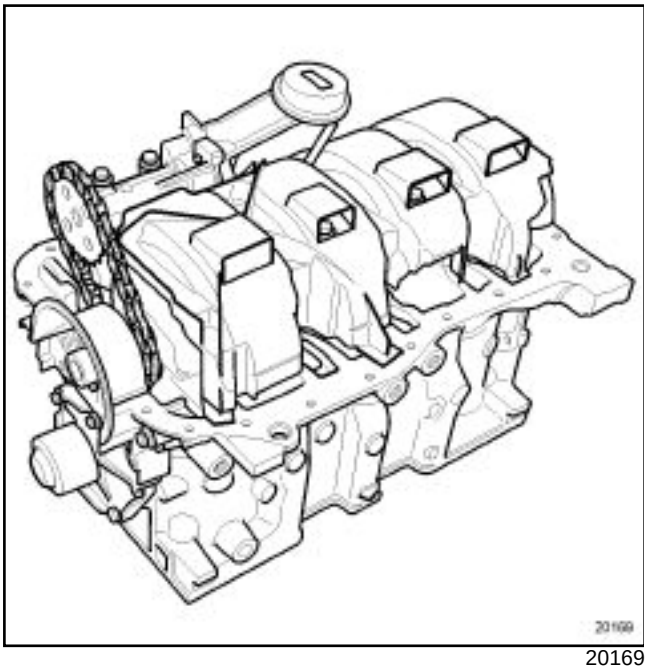

20169

When refitting the engine oil sump check that the lugs (**14**) of the oil splash plate are correctly positioned facing the grooves (**15**) .

Refit the oil splash plate.

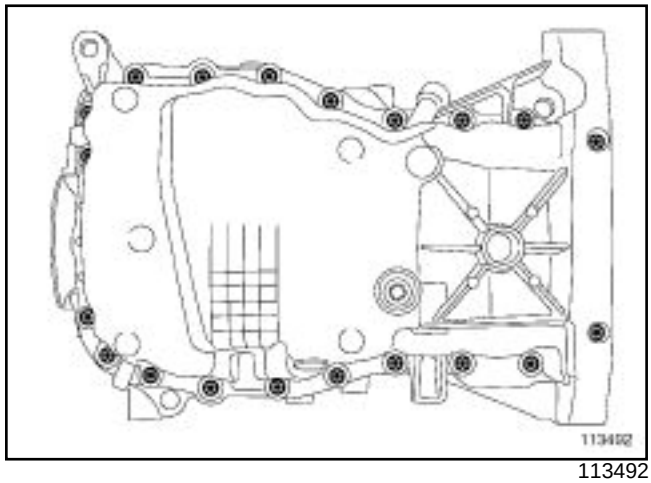

113492

Refit:

- the oil sump mounting seal,
- the engine oil sump,
- the oil sump mounting bolts,

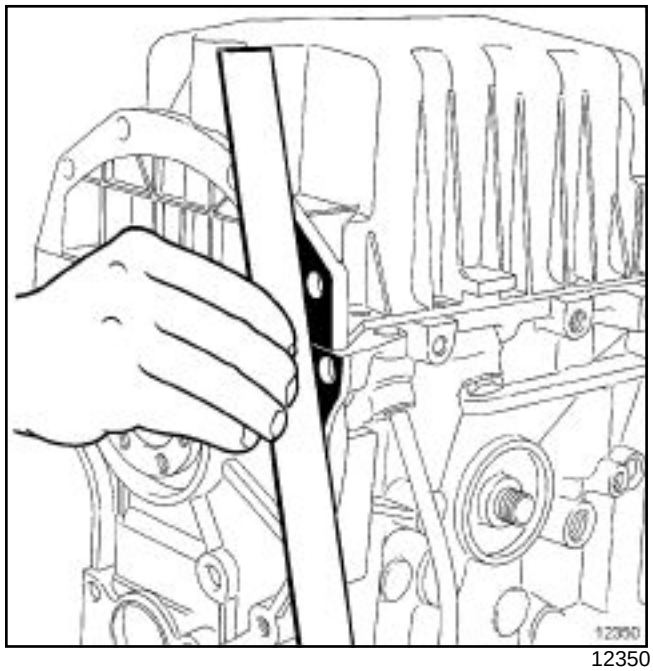

12350

Using a ruler, align the engine oil sump with the cylinder block.

K9K, and 260 or 270 or 272 or 700 or 702 or 704 or 706 or 710 or 722 or 750 or 752 or 790

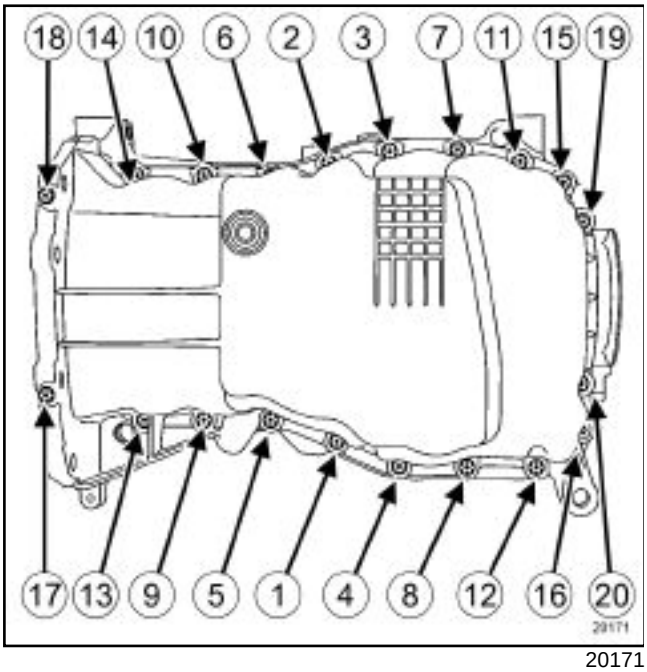

20171

Tighten to torque and in order **the engine oil sump mounting bolts (14 ± 1.4 Nm)** .

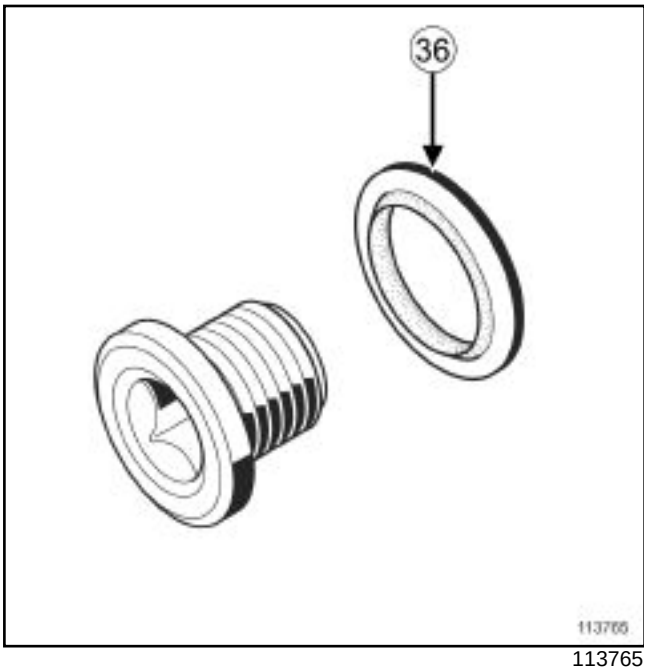

113765

Refit:

- a seal (**36**) on the drain plug of the engine oil sump,
- the drain plug of the engine oil sump, using the **(Mot. 1018)** .

Tighten to torque **the drain plug of the engine oil sump (20 ± 2 Nm)** .

Using degreaser, degrease the seal mating face on the crankshaft and the crankshaft nose closure unit.

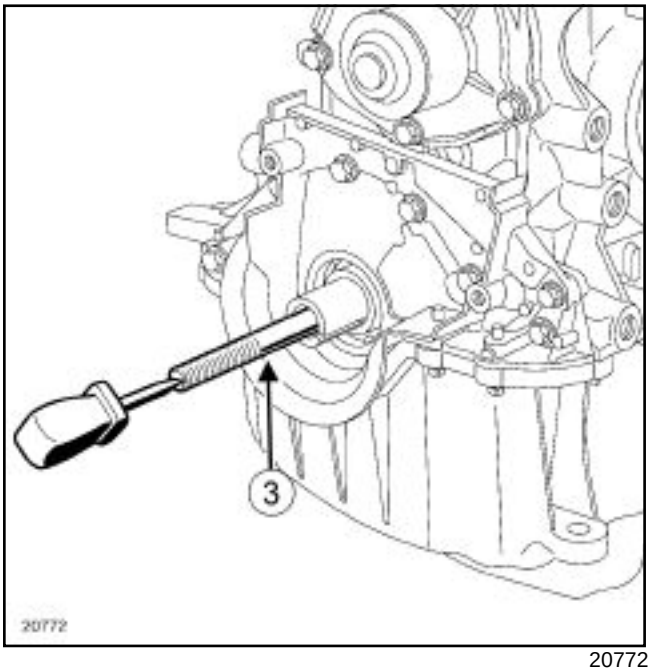

20772

Tighten the threaded rod (**3**) :

- of tool **(Mot. 1586)** in the crankshaft with an internal thread of **M12** ,
- of tool **(Mot. 1714)** in the crankshaft with an internal thread of **M14** ,

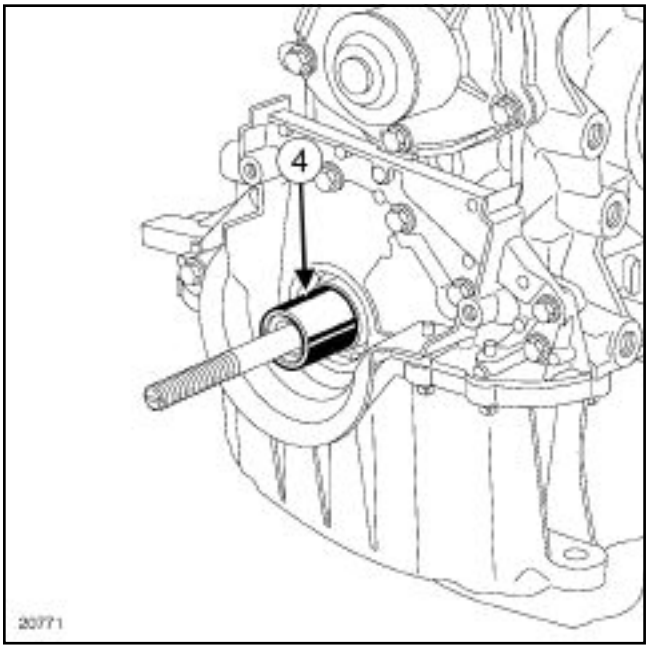

20771

Insert the spacer (**4**) of tool **(Mot. 1586)** in the crankshaft.

K9K, and 260 or 270 or 272 or 700 or 702 or 704 or 706 or 710 or 722 or 750 or 752 or 790

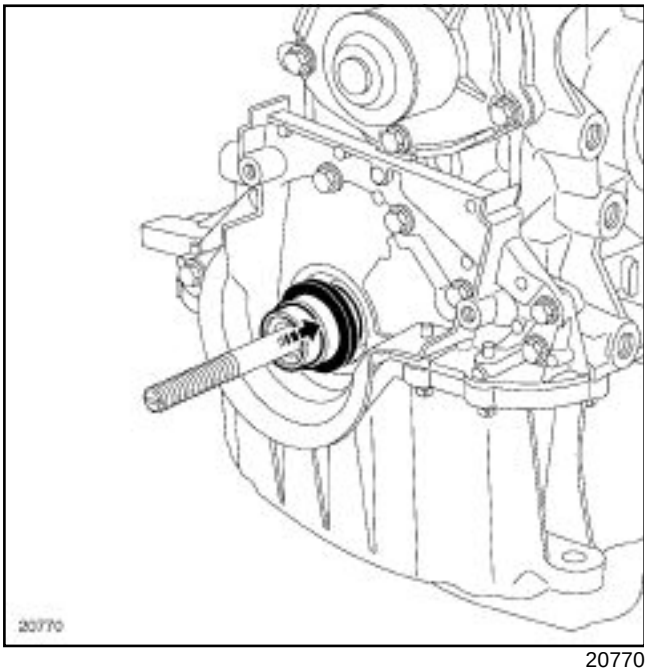

20770

Fit the protector with the new seal in place on the spacer, taking care not to touch the seal.

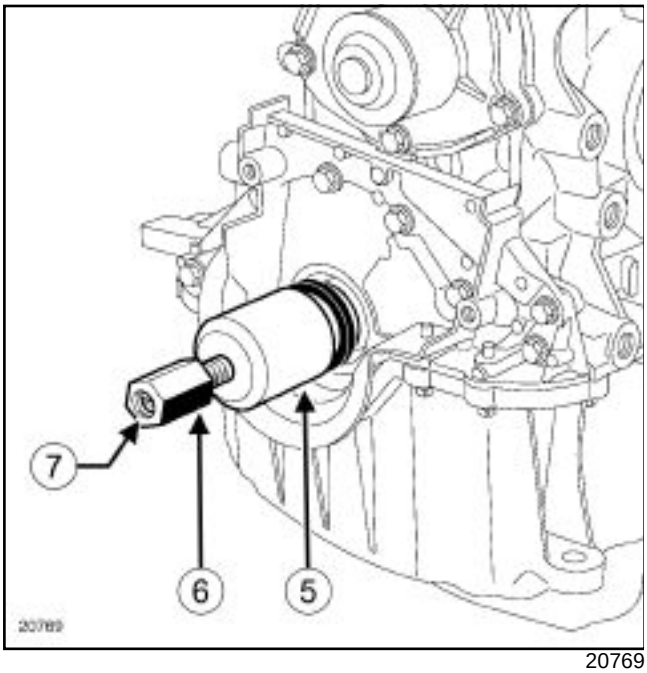

20769

Fit cover (**5**) and nut (**6**) (with the thread (**7**) of the nut towards the outside of the engine).

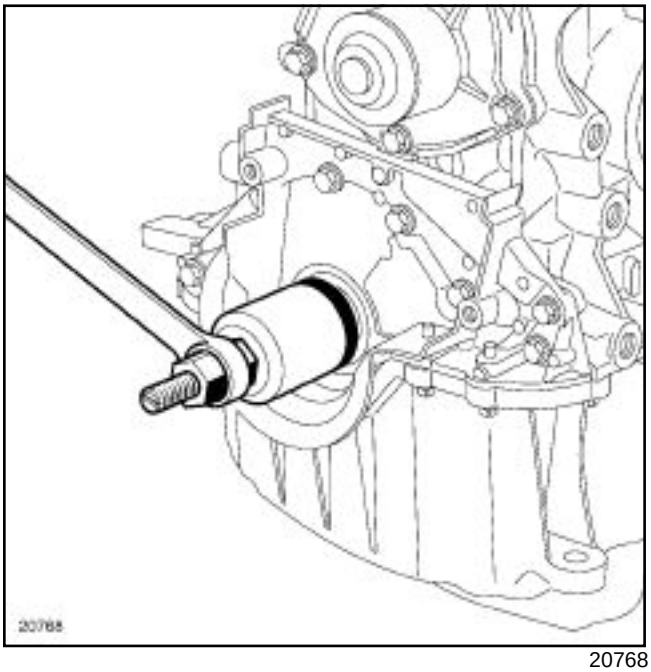

20768

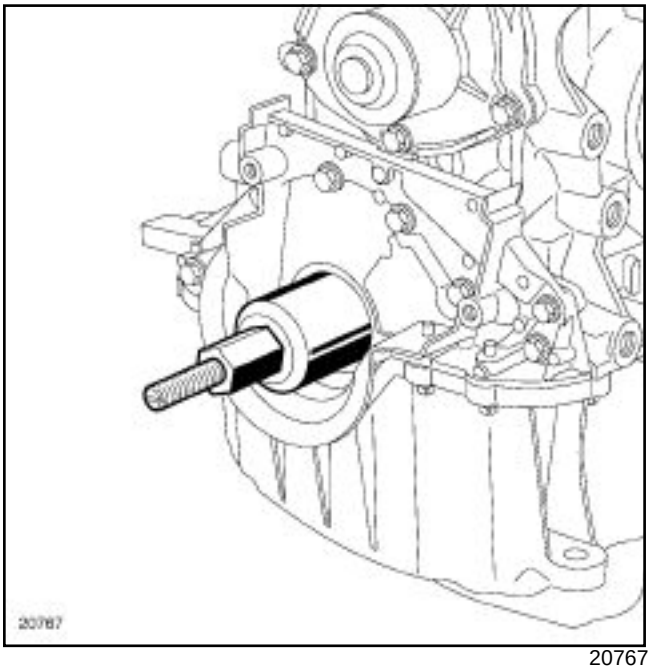

20767

Screw on the nut until the cover touches the spacer.

K9K, and 260 or 270 or 272 or 700 or 702 or 704 or 706 or 710 or 722 or 750 or 752 or 790

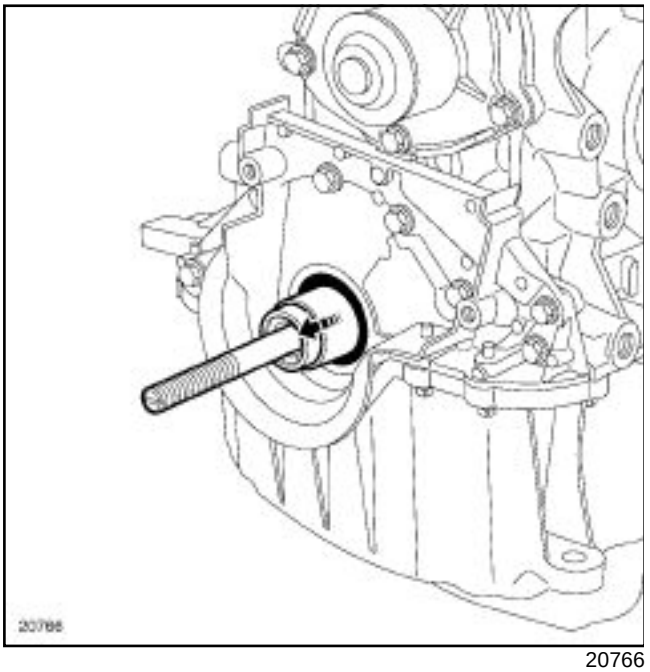

20766

Remove:

- the nut,
- the cap,
- the protector,
- the spacer,
- the threaded rod.

Using degreaser, degrease the seal mating face on the crankshaft and the cylinder block (flywheel end).

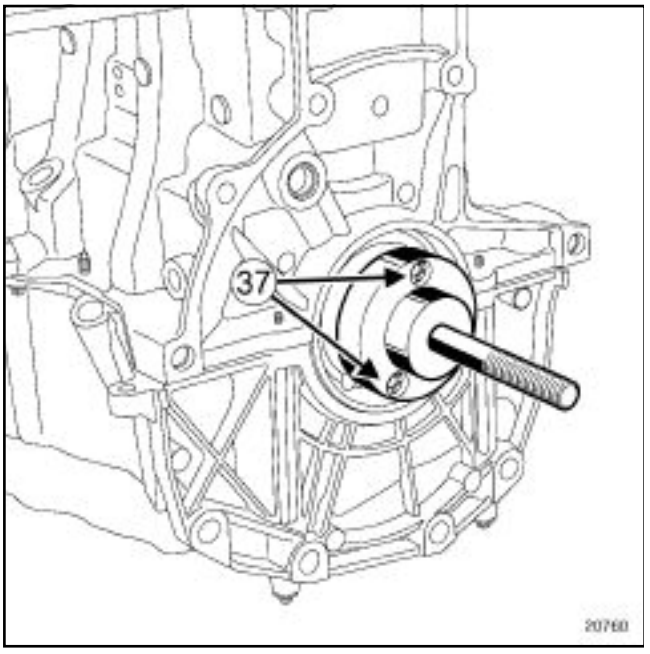

20760

Mount tool **(Mot. 1585)** on the crankshaft, securing it using bolts (**37**) .

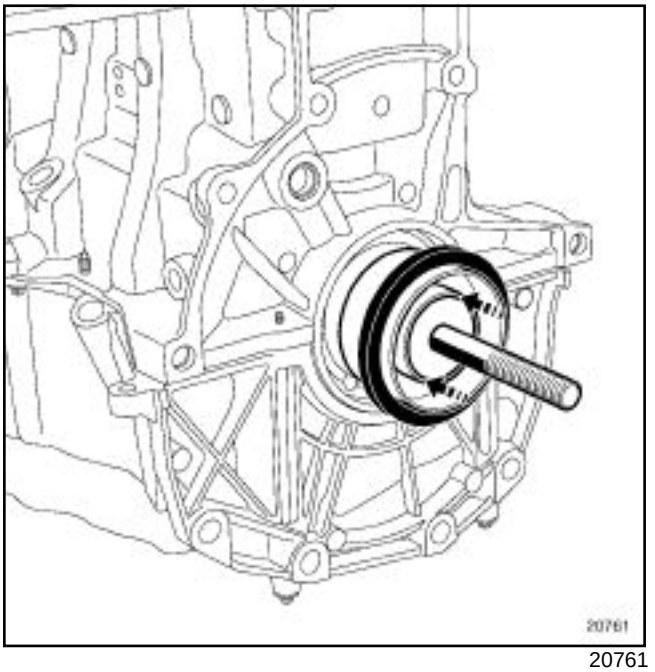

20761

Fit the protector with its seal in place on tool, **(Mot. 1585)** taking care not to touch the seal.

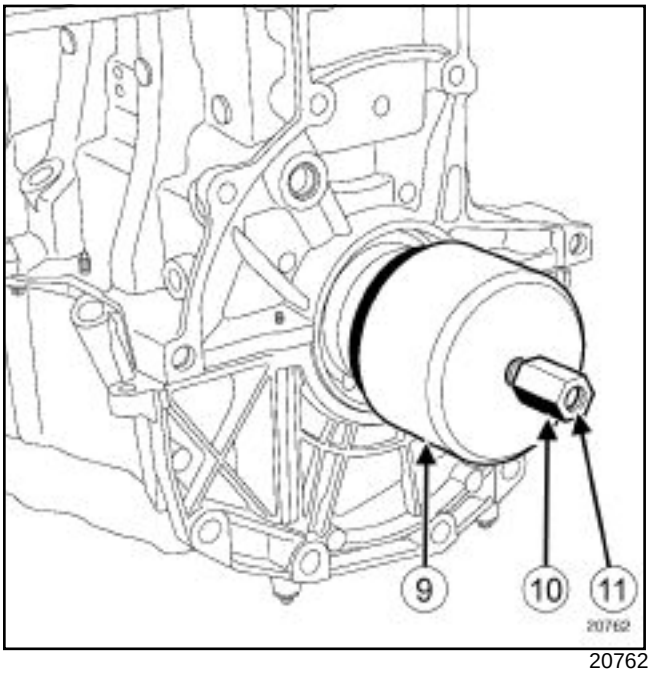

20762

Fit cover (**9**) and nut (**10**) (with the thread (**11**) of the nut towards the outside of the engine).

K9K, and 260 or 270 or 272 or 700 or 702 or 704 or 706 or 710 or 722 or 750 or 752 or 790

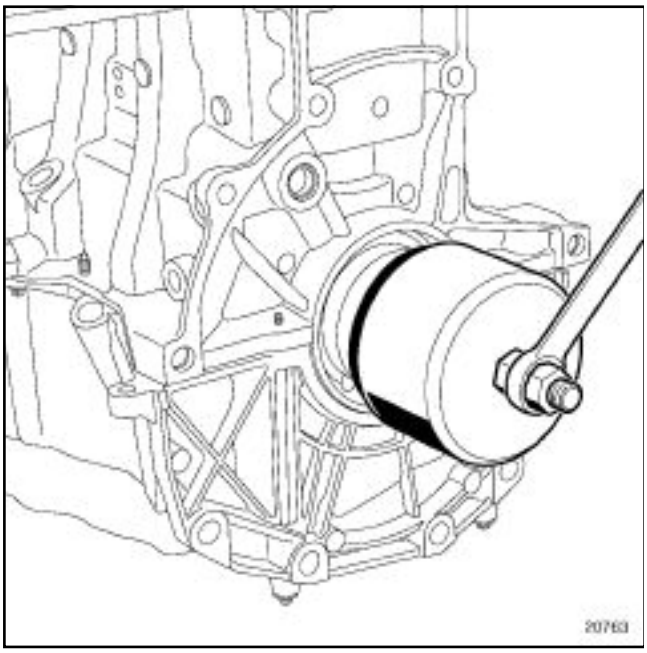

20763

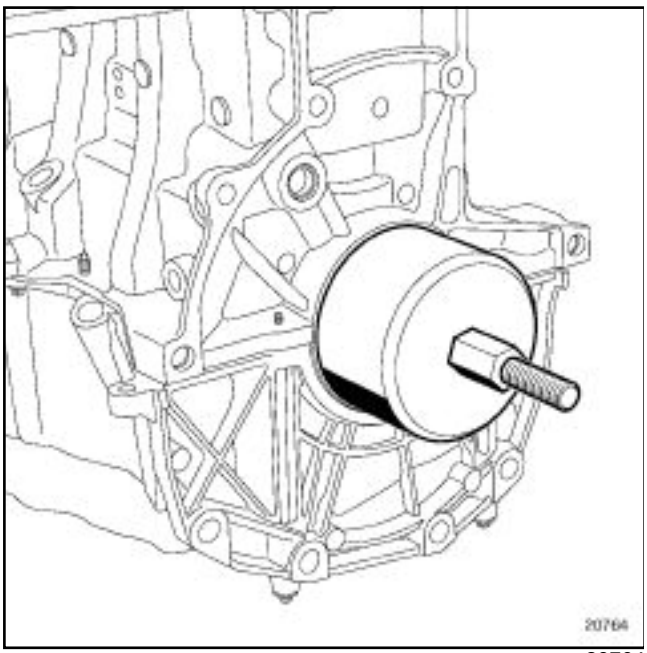

20764

Screw on the nut until the cover touches the cylinder block.

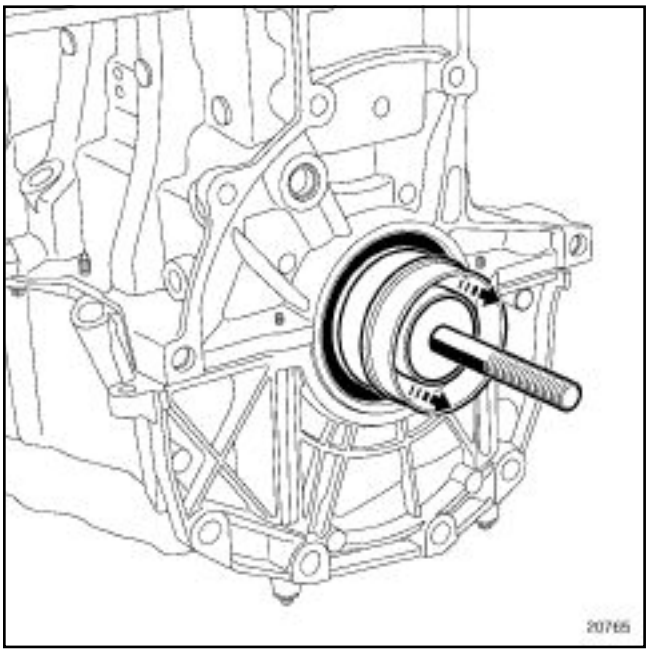

20765

Remove:

- the nut,
- the cap,
- the protector,
- the base.

Using degreaser, degrease the seal mating face of the cylinder block where it receives the coolant / oil heat exchanger.

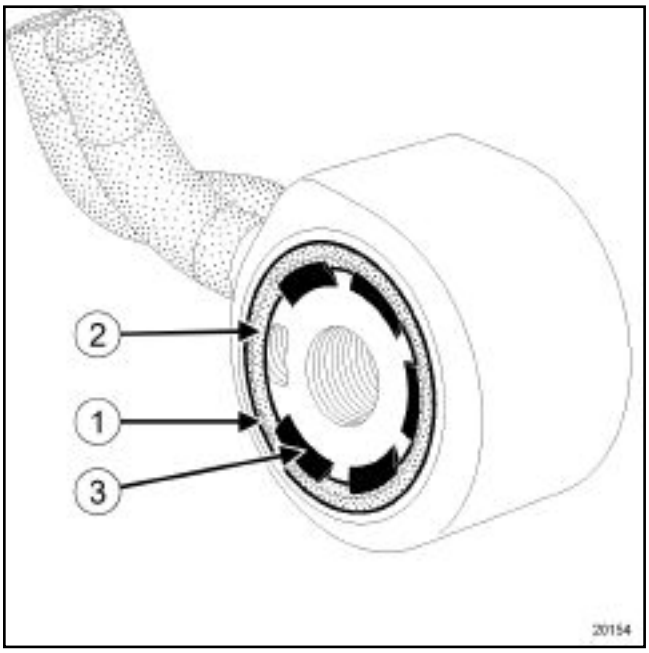

20154

Replace the seal (**1**) of the coolant / oil heat exchanger, positioning the lip (**2**) of the joint behind the tabs (**3**) of the coolant / oil heat exchanger.

K9K, and 260 or 270 or 272 or 700 or 702 or 704 or 706 or 710 or 722 or 750 or 752 or 790

1 - For engines fixed to the flywheel side

Refit a new o-ring seal to the coolant pump inlet pipe.

Put a little soapy water on the o-ring seal of the coolant pump inlet pipe.

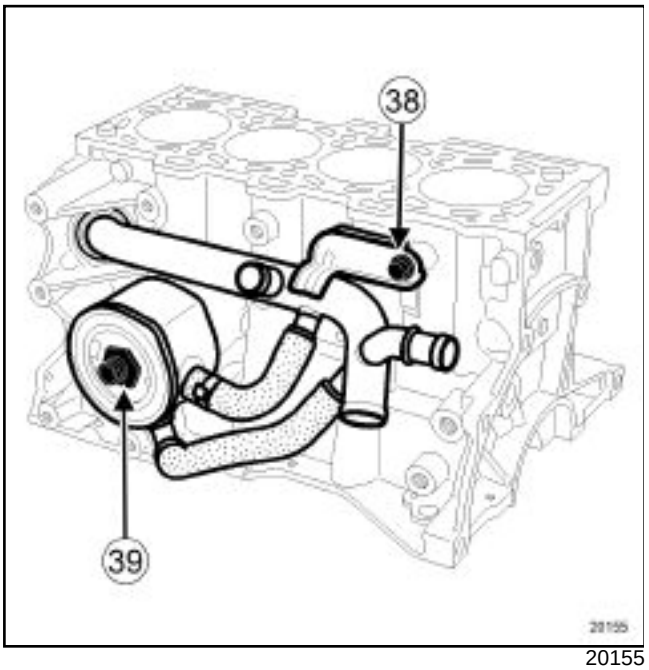

20155

Refit:

- the coolant pump inlet pipe,
- the mounting bolt (**38**) of the coolant pump inlet pipe,

Tighten to torque **the coolant pump pipe mounting bolt (22 ± 2.2 Nm)** .

Position the coolant / oil heat exchanger (fitted with its coolant hoses), enclosing the coolant hoses in the inlet pipe of the coolant pump, in order to position correctly the coolant / oil heat exchanger.

Apply two drops of **HIGH-RESISTANCE BOLT LOCKING PRODUCT** to the coolant / oil heat exchanger mounting bolt.

Refit:

- the coolant / oil heat exchanger,
- the mounting bolt (**39**) of the oil / coolant heat exchanger,

Tighten to torque **the coolant / oil heat exchanger mounting bolt (45 ± 4.5 Nm)** .

Using degreaser, degrease the seal mating face of the coolant / oil heat exchanger where it receives the oil filter holder.

K9K, and 260 or 270 or 272 or 700 or 702 or 704 or 706 or 710 or 722 or 750 or 752 or 790

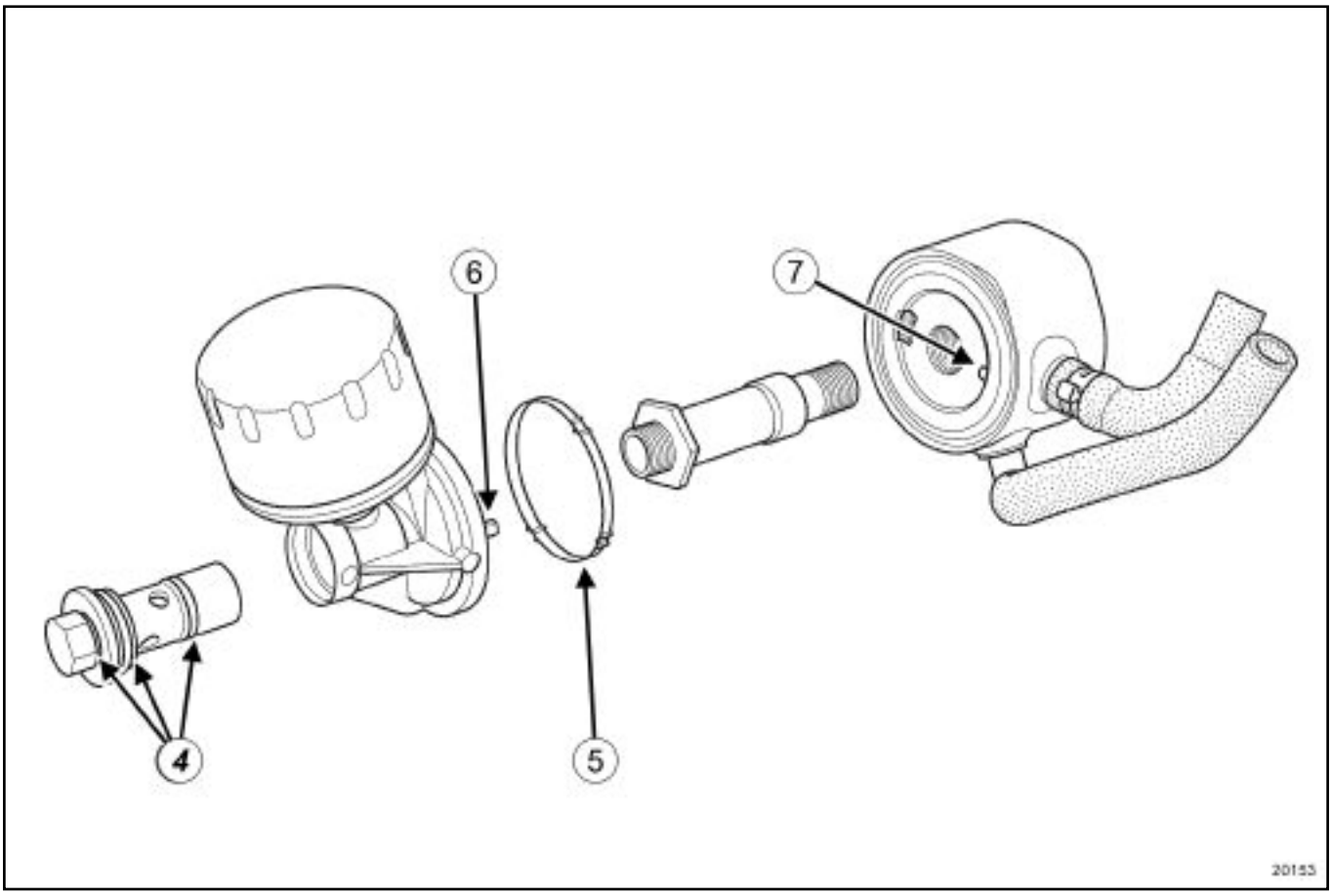

20153

Replace the seals (**4**) and (**5**) .

Refit the oil filter holder, positioning the lug (**6**) in the hole (**7**) on the coolant / oil heat exchanger.

K9K, and 260 or 270 or 272 or 700 or 702 or 704 or 706 or 710 or 722 or 750 or 752 or 790

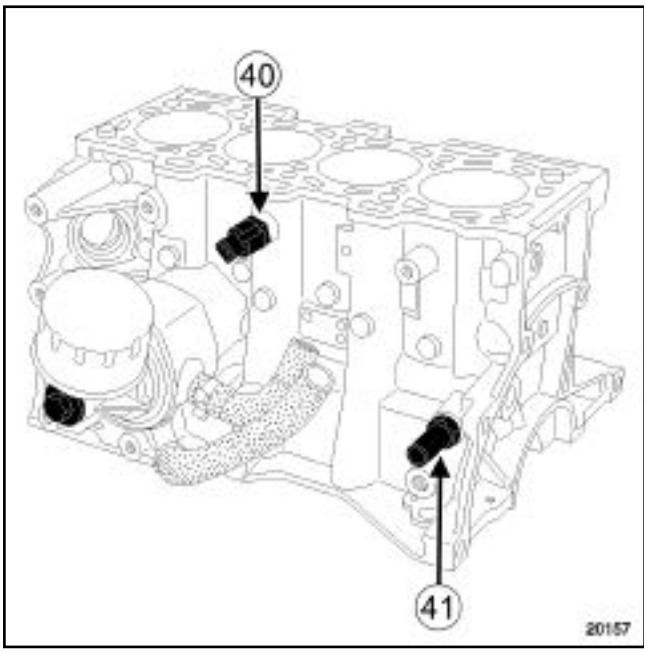

20157

Refit:

- the acceleration meter (**40**) ,
- the oil pressure switch (**41**) .

Tighten to torque:

- **the oil filter holder mounting bolt (45 ± 4.5 Nm)** ,
- **the acceleration meter (20 ± 2 Nm)** using the tool **(Emb. 1596)** ,
- **the oil pressure switch (30 ± 3 to 35 ± 3.5 Nm)** .

Lubricate the oil filter seal with new engine oil.

Refit the oil filter using the **(Mot. 1329)** .

Tighten to torque **the oil filter (14 ± 2 Nm)** .

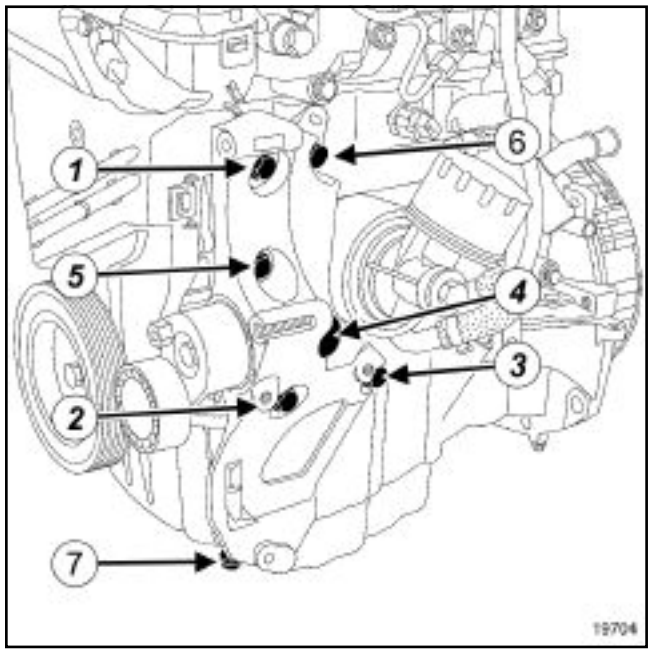

19704

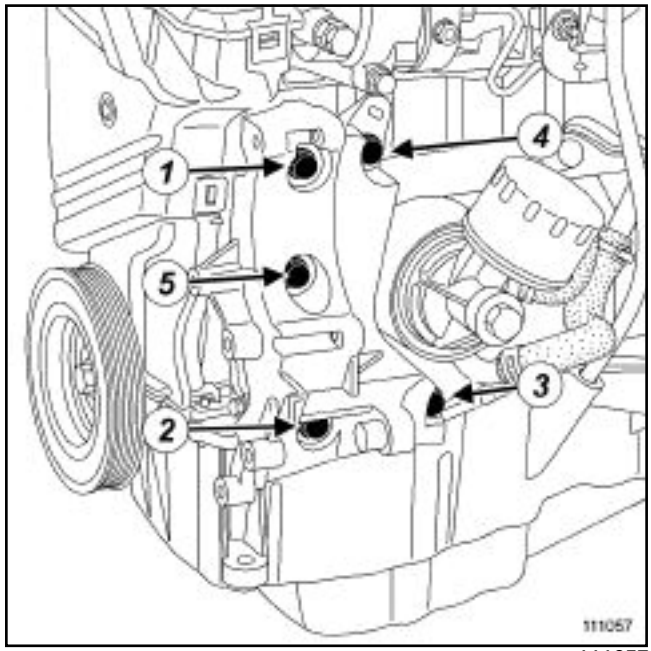

111057

Refit:

- the multifunction support,
- the multifunction support mounting bolts.

Tighten to torque and in order **the multifunction support mounting bolts (from 1 to 6 or from 1 to 5) (44 ± 4.4 Nm)** .

Torque tighten the **multifunction support mounting bolt (7) (21 ± 2.1 Nm)** .

K9K, and 260 or 270 or 272 or 700 or 702 or 704 or 706 or 710 or 722 or 750 or 752 or 790

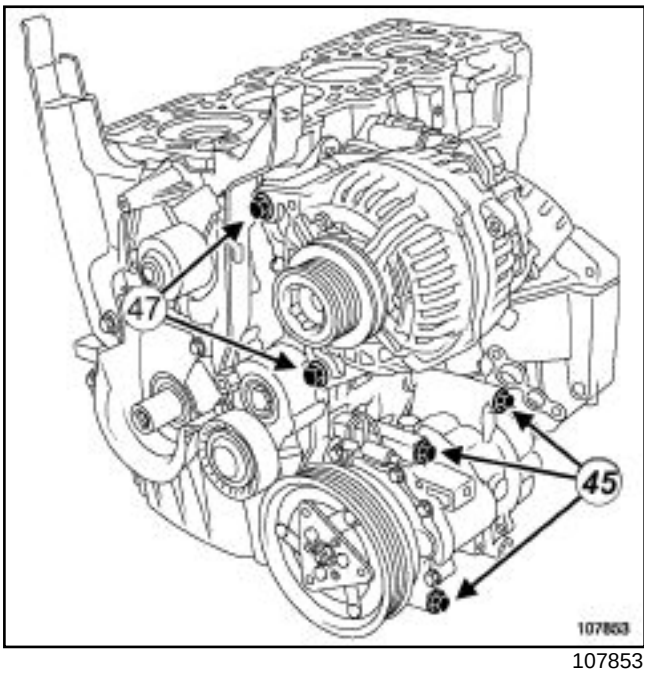

107853

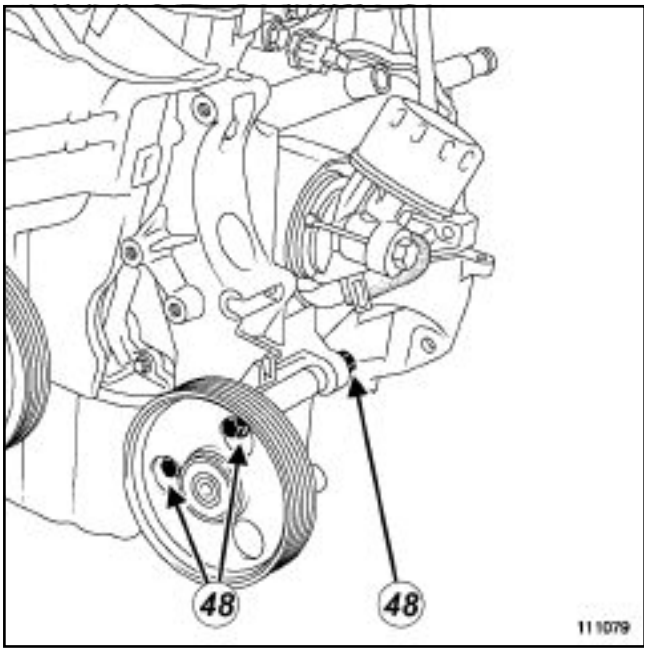

111079

Refit:

- the power assisted steering pump or the dummy pulley,
- the mounting bolts (**48**) of the power assisted steering pump or the dummy pulley,
- the air conditioning compressor (if fitted),
- the air conditioning compressor mounting bolts (**45**) ,
- the alternator,
- the alternator mounting bolts (**47**) .

Tighten to torque:

- **the mounting bolts of the power assisted steering pump or the dummy pulley (21 ± 2.1 Nm)** ,
- **the air conditioning compressor mounting bolts (21 ± 2.1 Nm)** ,
- **the alternator mounting bolts (21 ± 2.1 Nm)** .

2 - For engines fixed to the oil filter side

In order to position correctly the coolant / oil heat exchanger on the cylinder block it is essential to remove the cylinder block from the engine support using tool **(Mot. 923)** and a workshop hoist.

Remove the engine spindle from the cylinder block.

Refit:

- the coolant pump inlet pipe,
- the mounting bolt of the coolant pump inlet pipe.

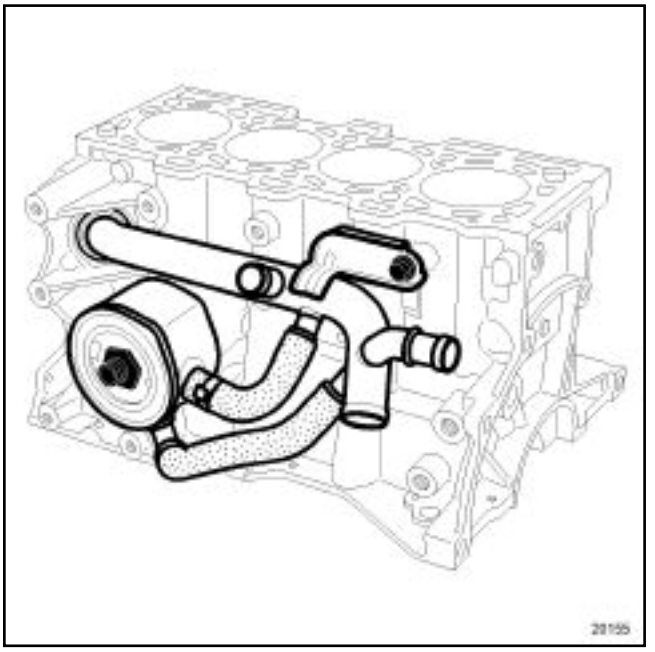

20155

Position the coolant / oil heat exchanger (fitted with its coolant hoses), enclosing the coolant hoses in the inlet pipe of the coolant pump, in order to position correctly the coolant / oil heat exchanger.

Apply two drops of **HIGH-RESISTANCE BOLT LOCKING PRODUCT** to the coolant / oil heat exchanger mounting bolt.

Tighten to torque **the coolant / oil heat exchanger mounting bolt (45 ± 4.5 Nm)** .

Using degreaser, degrease the seal mating face of the coolant / oil heat exchanger where it receives the oil filter holder.

K9K, and 260 or 270 or 272 or 700 or 702 or 704 or 706 or 710 or 722 or 750 or 752 or 790

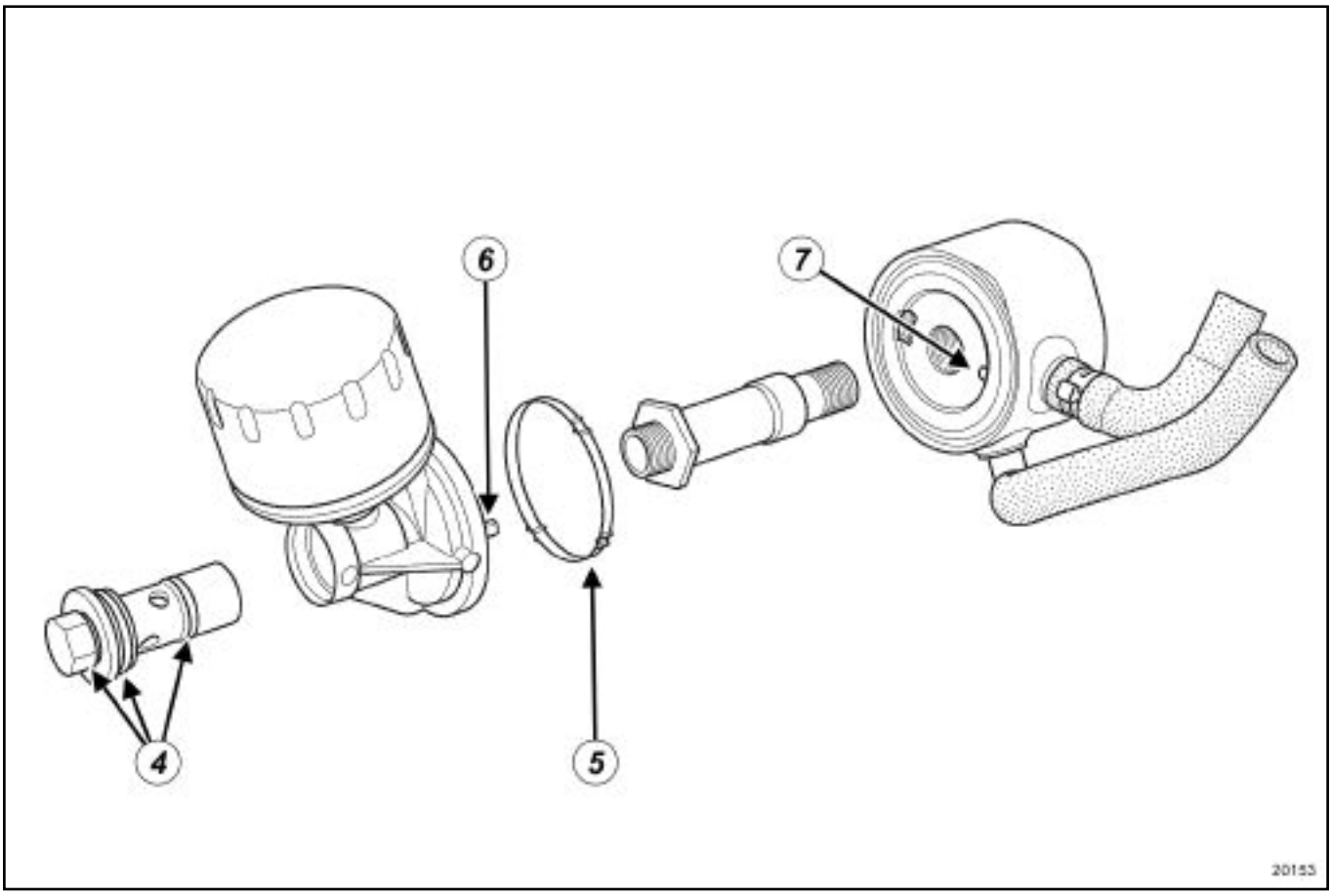

20153

Replace the seals (**4**) and (**5**) .

Refit the oil filter holder, positioning the lug (**6**) in the hole (**7**) on the coolant / oil heat exchanger.

K9K, and 260 or 270 or 272 or 700 or 702 or 704 or 706 or 710 or 722 or 750 or 752 or 790

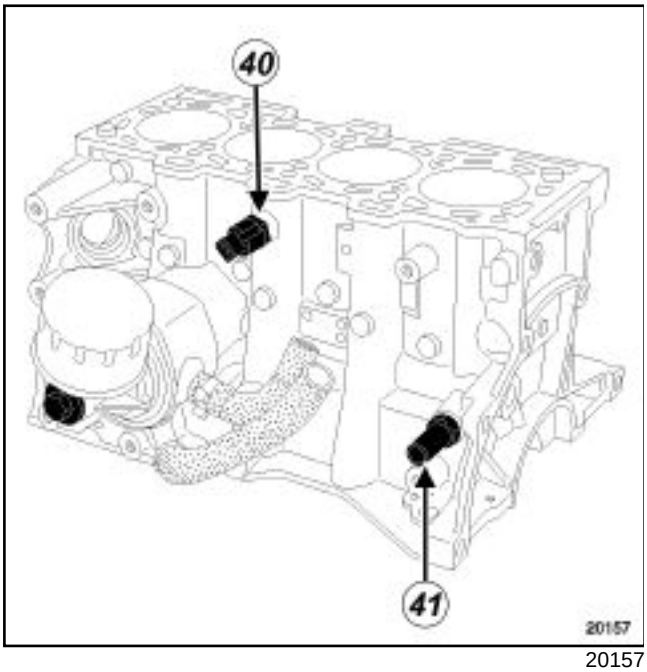

20157

Refit:

- the acceleration meter (**40**) ,
- the oil pressure switch (**41**) .

Tighten to torque:

- **the oil filter holder mounting bolt (45 ± 4.5 Nm)** ,
- **the acceleration meter (20 ± 2 Nm)** using the tool **(Emb. 1596)** ,
- **the oil pressure switch (30 ± 3 to 35 ± 3.5 Nm)** .

Remove the coolant pump inlet pipe.

Refit:

- the engine spindle onto the cylinder block.
- the cylinder block onto the engine support.

Lubricate the oil filter seal with new engine oil.

Refit the oil filter using the tool **(Mot. 1329)** .

Tighten to torque the **oil filter (14 ± 2 Nm)** .

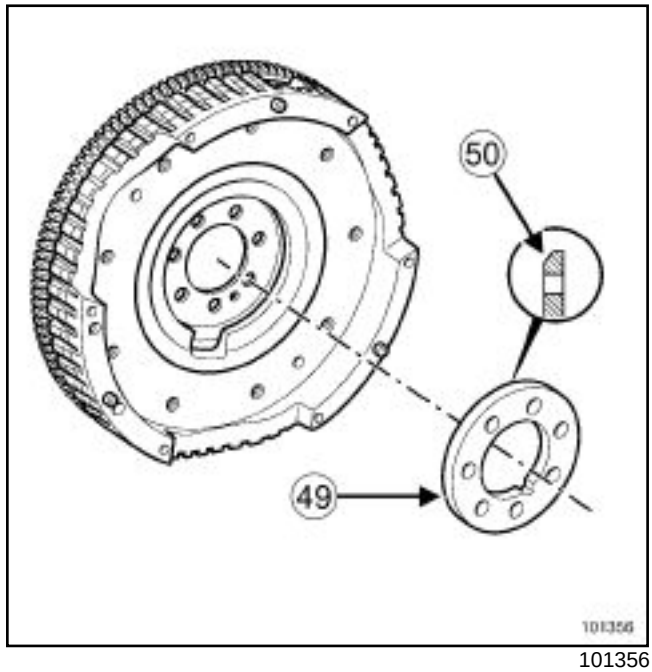

101356

Note:

Certain flywheels have a shim (49) . It is essential to position the chamfer (50) of the shim on the flywheel side .

K9K, and 260 or 270 or 272 or 700 or 702 or 704 or 706 or 710 or 722 or 750 or 752 or 790

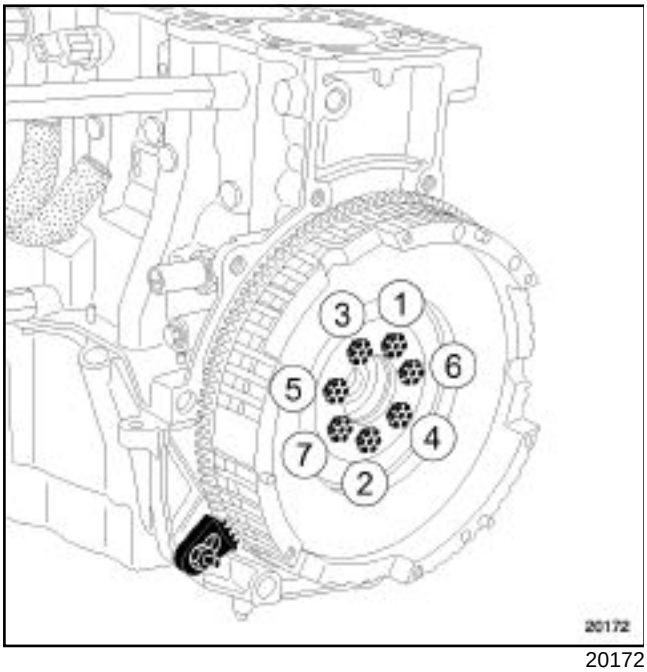

20172

Refit:

- the flywheel,
- the new flywheel mounting bolts,
- engine flywheel locking tool **(Mot. 582-01)** or **(Mot. 1677)** .

Tighten to torque and in order the **flywheel mounting bolts (55 ± 5.5 Nm)** .

Using degreasing agent, degrease the friction face on the flywheel.

Refit the friction disc (aligning it correctly).

Centre the friction disc using tool **(Emb. 1780)** .

Using degreasing agent, degrease the friction face on the clutch mechanism.

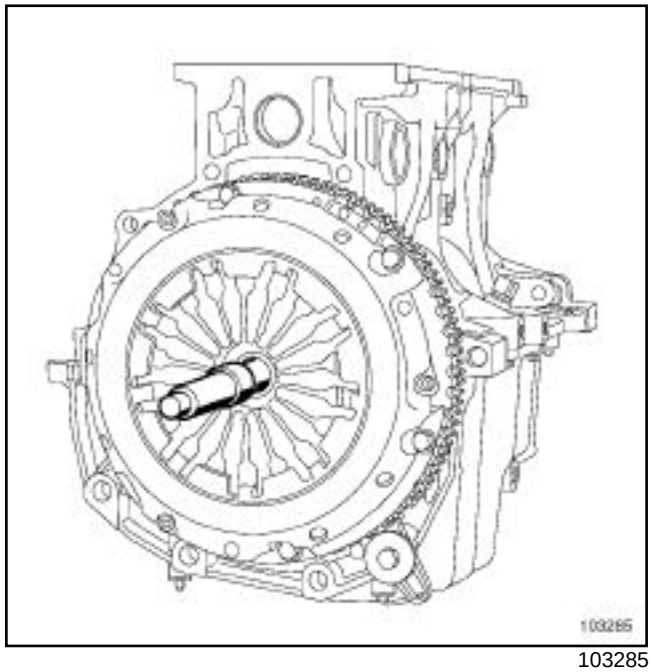

103285

Refit:

- the clutch pressure plate,
- the clutch mechanism mounting bolts.

Gradually tighten the mounting bolts of the clutch pressure plate.

Tighten to torque **the clutch mechanism mounting bolts (M6 to 14 ± 1.4 Nm and bolts M7 to 20 ± 2 Nm)** .

Remove engine flywheel locking tool **(Mot. 582-01)** or. **(Mot. 1677)** .

K9K, and 274 or 276 or 712 or 714 or 716 or 718 or 724 or 728 or 729 or 760 or 762 or 766 or 768

Special tooling required	
Mot. 1018	Sump plug tool.
Mot. 1586	Tool for fitting PTFE crankshaft seal, timing end.
Mot. 1714	Adapter for fitting PTFE crankshaft seal, timing end.
Mot. 1585	Tool for fitting PTFE crankshaft seal, flywheel end.
Emb. 1596	24 mm socket for removing/refitting clutch master cylinder.
Mot. 1329	Oil filter removing tool (76 mm diameter).
Mot. 1677	Flywheel locking tool.
Emb. 1780	Set of clutch disc centring mandrels.

Tightening torques ▽	
oil pump mounting bolts	**25 ± 2.5 Nm**
the crankshaft nose closure unit mounting bolts	**11 ± 1.1 Nm**
the coolant pump mounting bolts	**11 ± 1.1 Nm**
the engine oil sump mounting bolts	**14 ± 1.4 Nm**
the drain plug of the engine oil sump	**20 ± 2 Nm**
the coolant pump inlet pipe mounting bolt	**22 ± 2.2 Nm**
the oil level sensor	**25 ± 2.5 Nm**
the acceleration meter	**20 ± 2 Nm**
the coolant/oil heat exchanger mounting bolt	**45 ± 4.5 Nm**
oil filter holder mounting bolt	**45 ± 4.5 Nm**

Tightening torques ▽	
oil filter	**14 ± 2 Nm**
the multifunction support mounting bolts (1 to 6)	**44 ± 4.4 Nm**
multifunction support mounting bolt (7)	**21 ± 2.1 Nm**
the mounting bolts of the power assisted steering pump or the dummy pulley	**21 ± 2.1 Nm**
the air conditioning compressor mounting bolts	**21 ± 2.1 Nm**
the alternator mounting bolts	**21 ± 2.1 Nm**
flywheel mounting bolts	**55 ± 5.5 Nm**
the clutch mechanism mounting bolts	**M6 to 14 ± 1.4 Nm and bolts M7 to 20 ± 2 Nm**

I - RECOMMENDATIONS FOR REPAIR

IMPORTANT
Wear protective gloves during every operation.

K9K, and 274 or 276 or 712 or 714 or 716 or 718 or 724 or 728 or 729 or 760 or 762 or 766 or 768

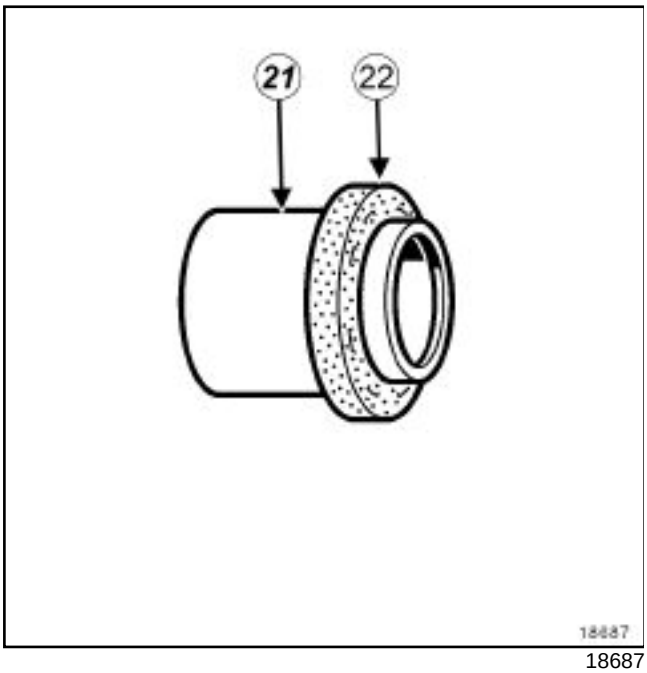

18687

WARNING

This type of seal is very delicate. When handling, it is essential to grip protective piece (**21**) . It is strictly forbidden to touch seal; (**22**) this is to prevent any oil leaks once the oil seal is fitted to the engine.

The sealing surfaces must be clean, dry and free from grease (avoid finger marks).

Applying excess sealant could cause it to be squeezed out when parts are tightened. A mixture of sealant and fluid could damage certain components (engine, radiator, etc.)

II - PARTS AND CONSUMABLES FOR THE REPAIR

Parts always to be replaced

- The crankshaft nose closure unit seal,
- The coolant pump seal,
- The oil sump mounting seal,
- The clutch mechanism (if necessary),
- The friction disc (if necessary),
- Flywheel mounting bolt
- The coolant pump inlet pipe seal,
- The oil/coolant heat exchanger seals,
- The crankshaft seal, timing end,
- The crankshaft seal, flywheel end,
- Oil filter,
- The seal of the drain plug of the engine oil sump.

Consumables

- Degreasing agent, part no. **77 11 224 559** .
- Silicone adhesive sealant, part no. **77 11 227 484** ,
- High-resistance bolt locking product, part no. **77 11 230 112** ,

III - EQUIPMENT REQUIRED

- Torque/angle wrench,
- Torque wrench
- Cylinder head bolt tightening gauge (angular measuring type),
- Rule,
- Male triangular drive drain plug spanner **8 mm** ,
- Male torx socket.
- Oil can,

IV - REASSEMBLING THE CYLINDER BLOCK

Put a little engine oil from an oil can in the oil pump via the oil sump filter.

20164

Refit:

- the oil pump drive sprocket,
- the oil pump chain.

K9K, and 274 or 276 or 712 or 714 or 716 or 718 or 724 or 728 or 729 or 760 or 762 or 766 or 768

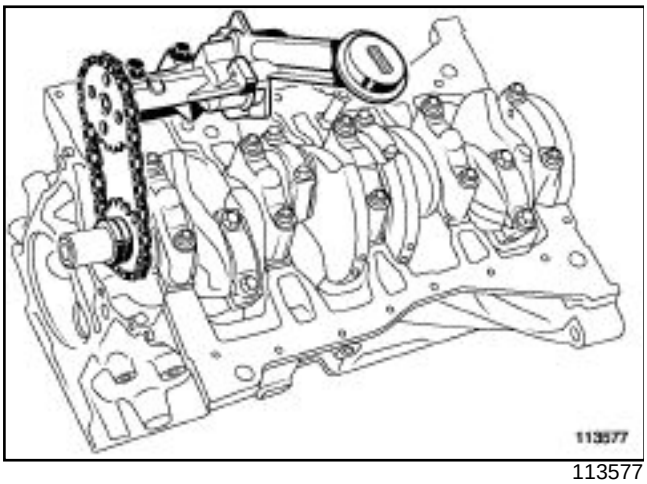

113577

Refit the oil pump.

Tighten to torque the **oil pump mounting bolts (25 ± 2.5 Nm)** .

Apply degreaser to:

- the crankshaft nose closure panel,
- the coolant pump,
- the surface of the seal of the crankshaft nose closure unit on the cylinder block,
- the surface of the coolant pump seal on the cylinder block.

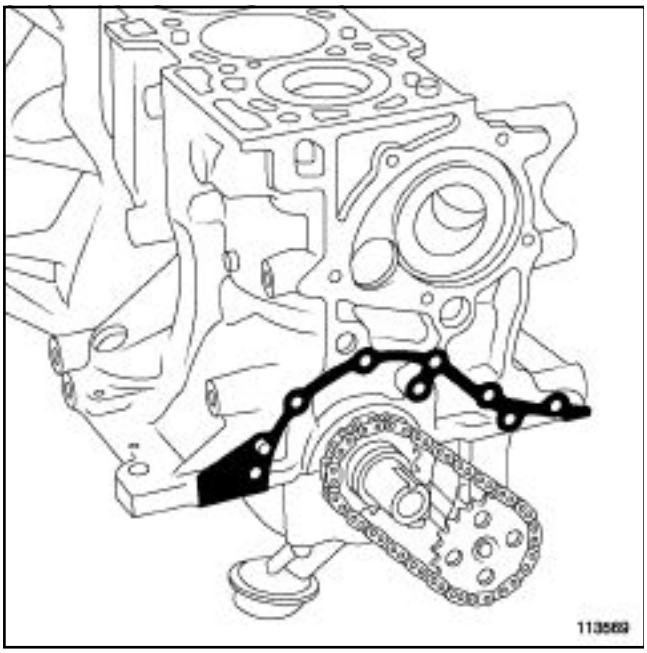

113569

Fit a new seal to the crankshaft nose closure unit.

Check for the centring dowels on the crankshaft nose closure unit.

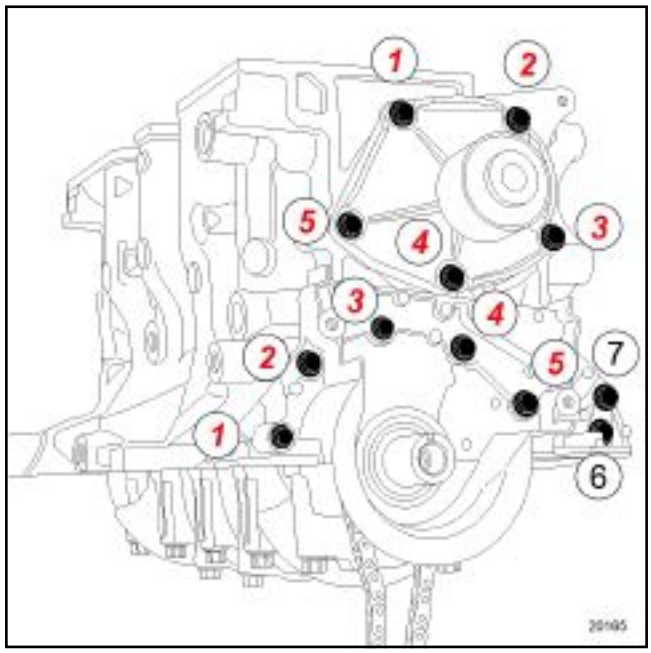

20165

Refit:

- the crankshaft nose closure panel,
- the crankshaft nose closure unit mounting bolt,

Tighten to torque and in order **the crankshaft nose closure unit mounting bolts (11 ± 1.1 Nm)** .

Apply a drop of **HIGH-RESISTANCE BOLT LOCKING PRODUCT** to the coolant pump mounting bolts.

Refit:

- the coolant pump fitted with a new seal,
- the coolant pump mounting bolts.

Tighten to torque and in order **the coolant pump mounting bolts (11 ± 1.1 Nm)** .

Using degreaser, degrease the seal surfaces of the lower part of the cylinder block and the oil sump.

K9K, and 274 or 276 or 712 or 714 or 716 or 718 or 724 or 728 or 729 or 760 or 762 or 766 or 768

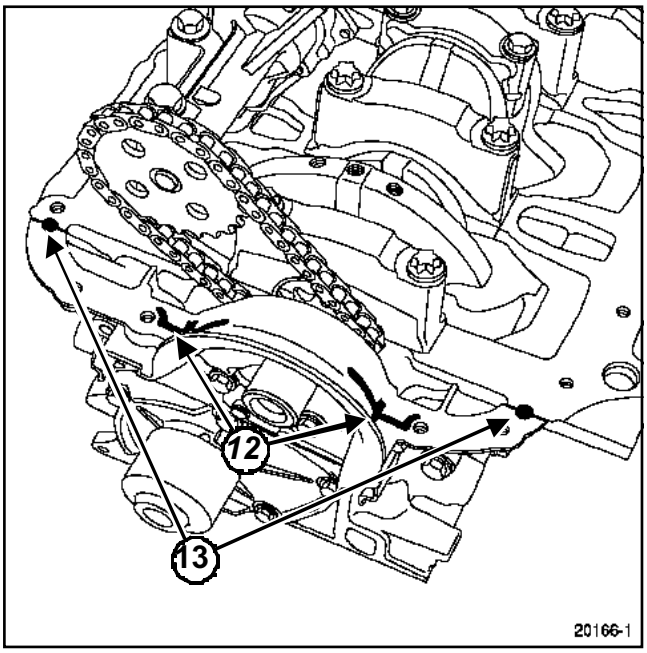

20166

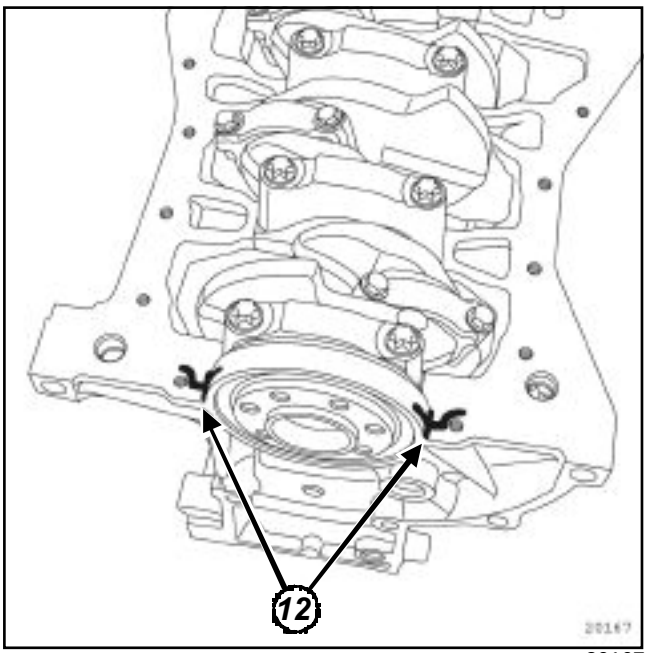

20167

Apply:

- four beads (**12**) of **SILICONE ADHESIVE SEALANT** with a diameter of **5 mm** ,
- two points (**13**) of **SILICONE ADHESIVE SEALANT 5 mm** in diameter, at the connection between the crankshaft nose closure panel and the cylinder block.

K9K, and 712 or 728

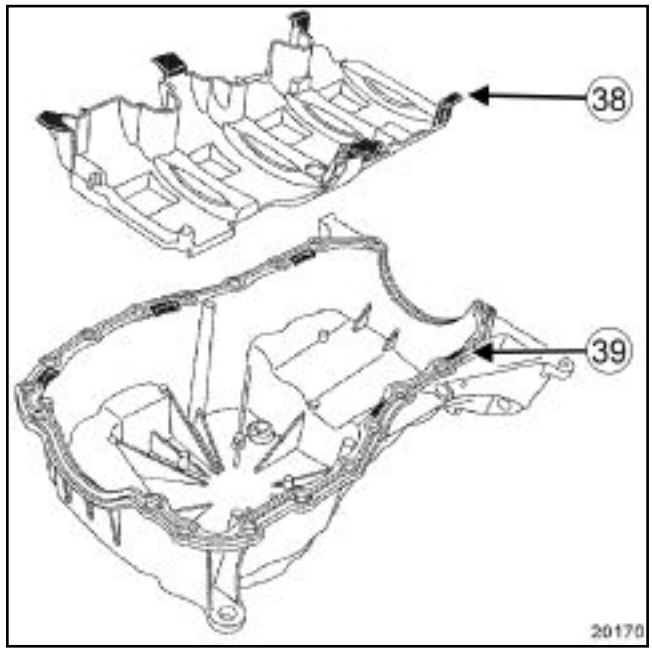

20170

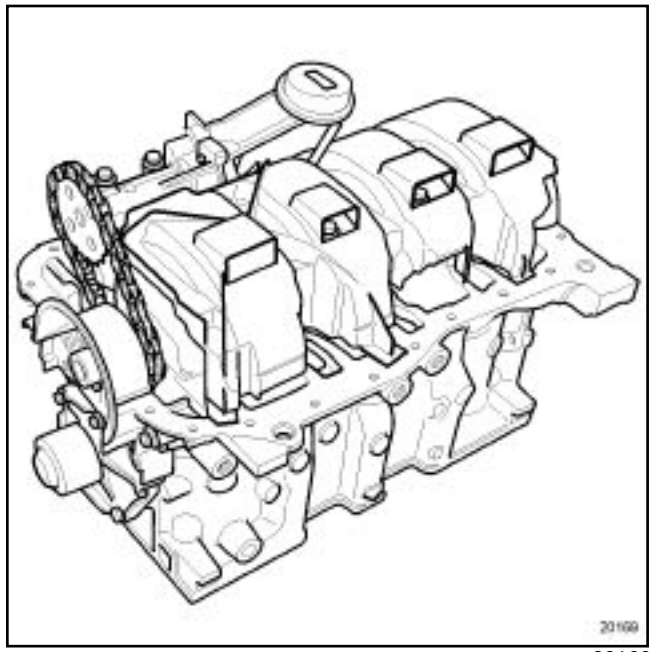
20169

When refitting the engine oil sump check that the tabs (**38**) of the oil splash plate are correctly positioned facing the grooves (**39**) .

Refit the oil splash plate.

K9K, and 274 or 276 or 712 or 714 or 716 or 718 or 724 or 728 or 729 or 760 or 762 or 766 or 768

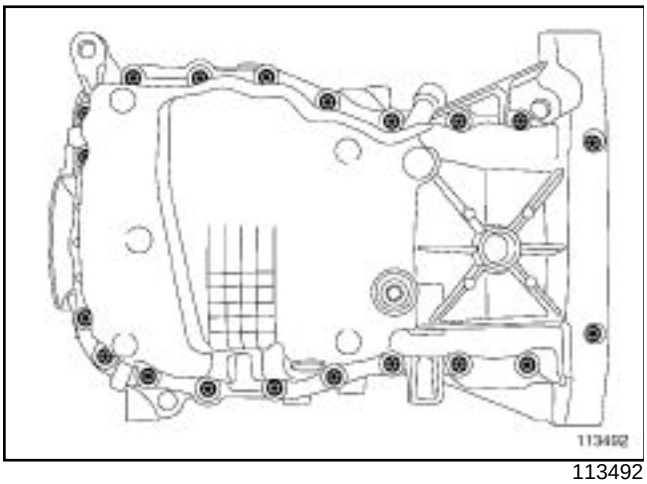

113492

Refit:

- the oil sump mounting seal,
- the engine oil sump,
- the oil sump mounting bolts,

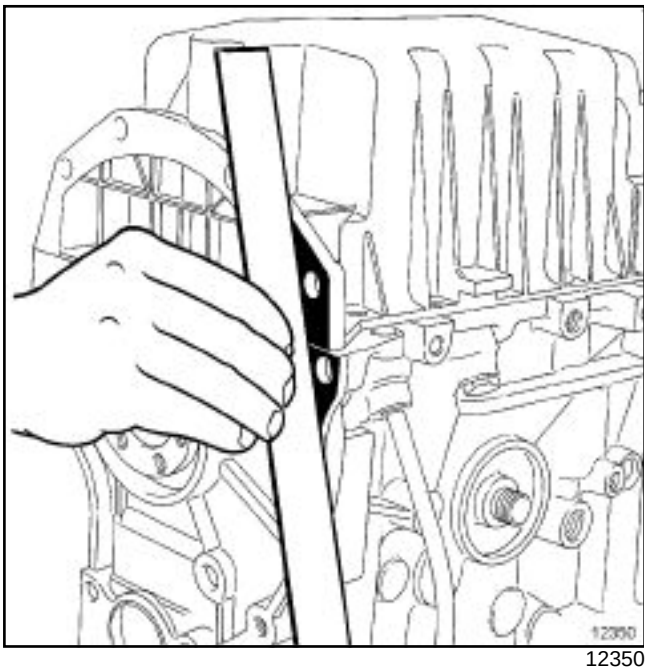

12350

Using a ruler, align the engine oil sump with the cylinder block.

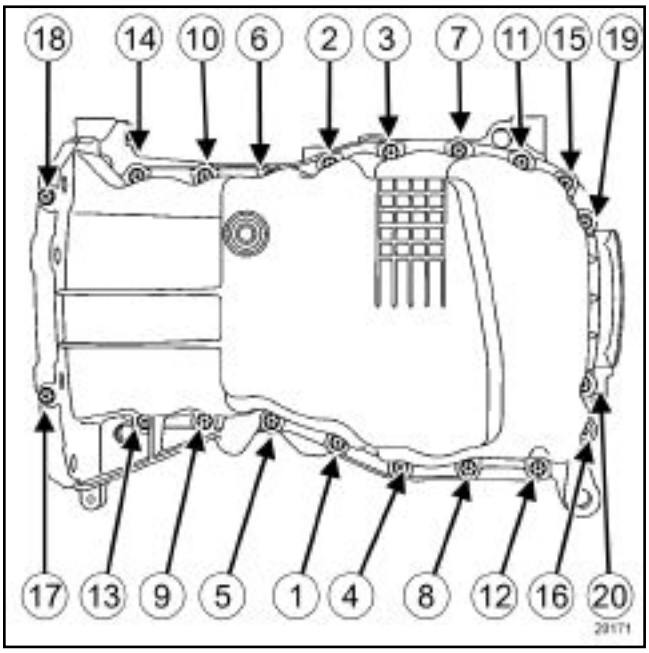

20171

Tighten to torque and in order **the engine oil sump mounting bolts (14 ± 1.4 Nm)** .

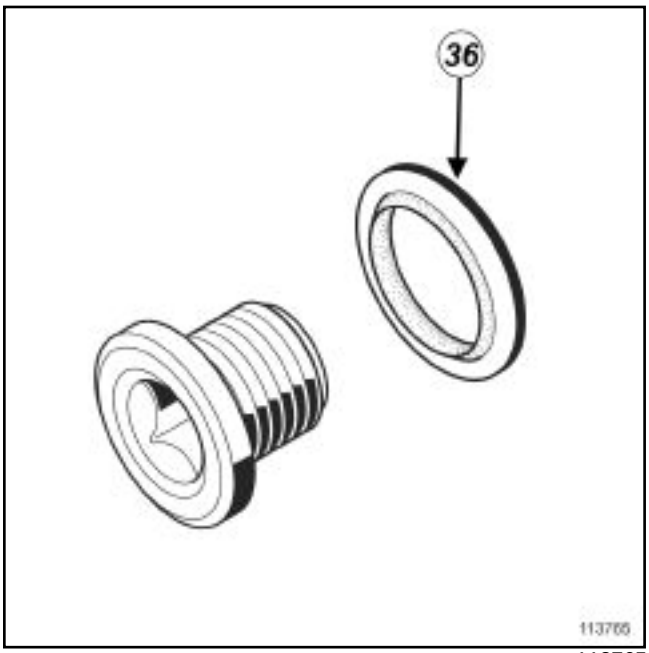

113765

Refit:

- a seal (**36**) on the drain plug of the engine oil sump,
- the drain plug of the engine oil sump, using the **(Mot. 1018)** .

Tighten to torque **the drain plug of the engine oil sump (20 ± 2 Nm)** .

Using degreaser, degrease the seal mating face on the crankshaft and the crankshaft nose closure unit.

K9K, and 274 or 276 or 712 or 714 or 716 or 718 or 724 or 728 or 729 or 760 or 762 or 766 or 768

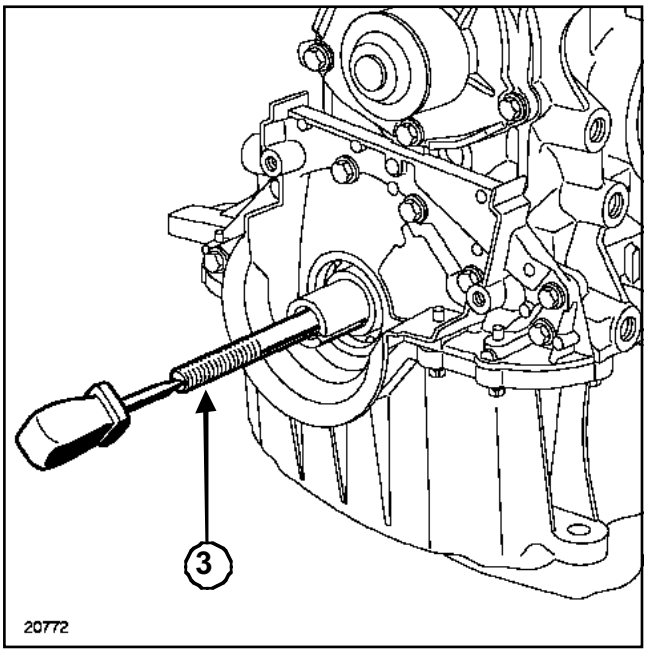

20772

Tighten the threaded rod (**3**) :

- of the **(Mot. 1586)** in the crankshaft with a **M12** thread hole,
- of the **(Mot. 1714)** in the crankshaft with a **M14** thread hole,

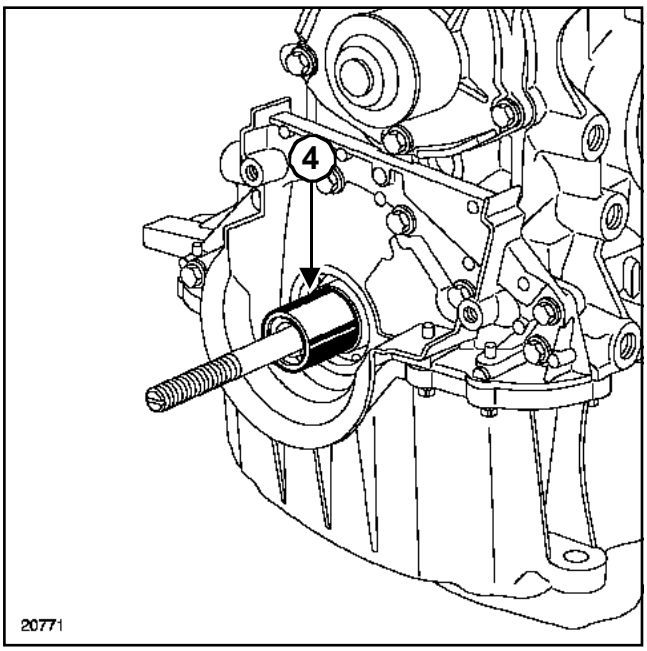

20771

Insert the spacer (**4**) of the **(Mot. 1586)** in the crankshaft.

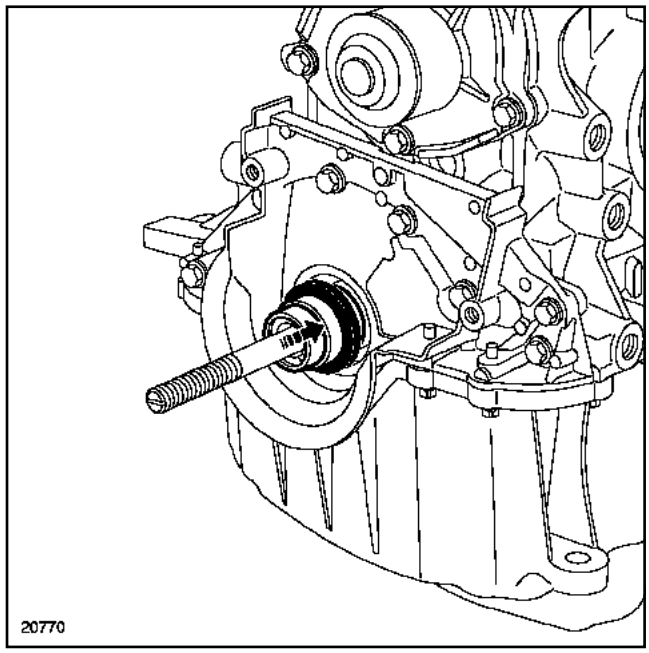

20770

Fit the protector with the new seal in place on the spacer, taking care not to touch the seal.

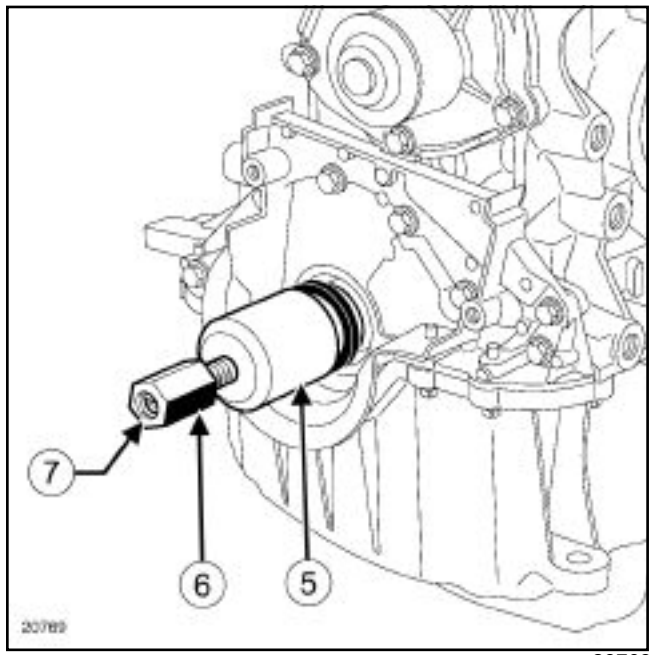

20769

Fit cover (**5**) and nut (**6**) (with the thread (**7**) of the nut towards the outside of the engine).

K9K, and 274 or 276 or 712 or 714 or 716 or 718 or 724 or 728 or 729 or 760 or 762 or 766 or 768

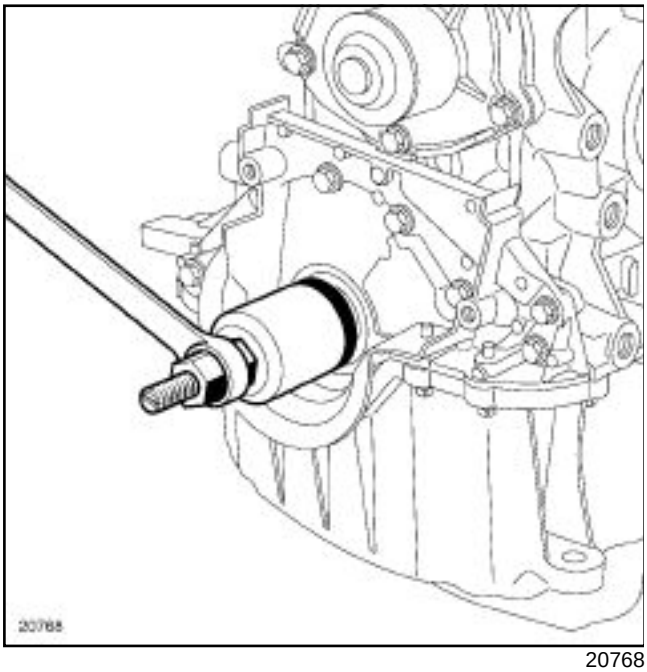

20768

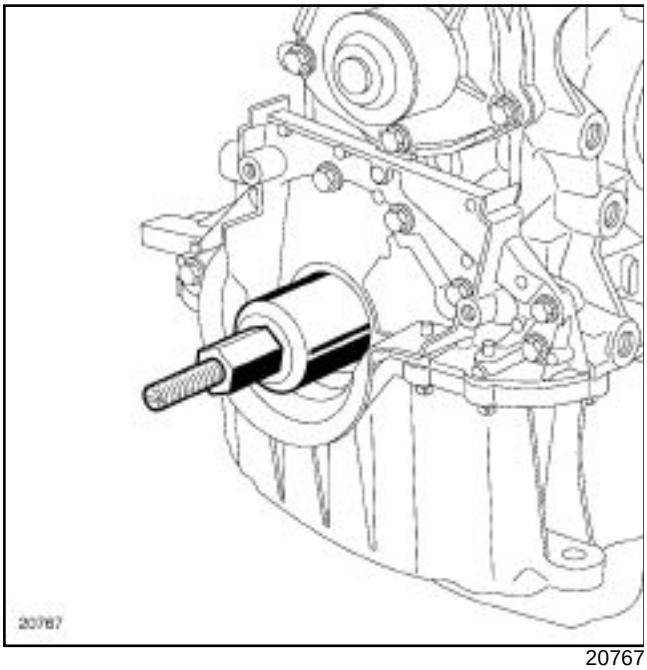

20767

Screw on the nut until the cover touches the spacer.

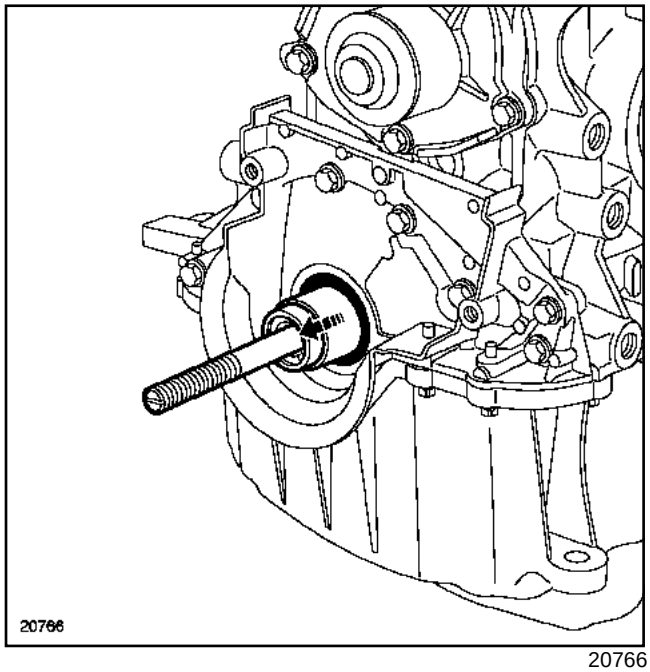

20766

Remove

- the nut,
- the cap,
- the protector,
- the spacer,
- the threaded rod.

Using degreaser, degrease the seal mating face on the crankshaft and the cylinder block (flywheel end).

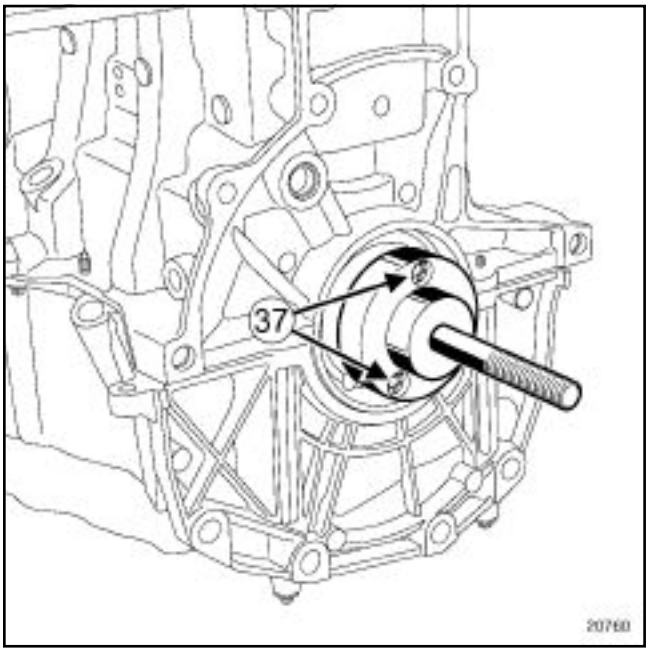

20760

Mount the **(Mot. 1585)** on the crankshaft, securing it using bolts (**37**) .

K9K, and 274 or 276 or 712 or 714 or 716 or 718 or 724 or 728 or 729 or 760 or 762 or 766 or 768

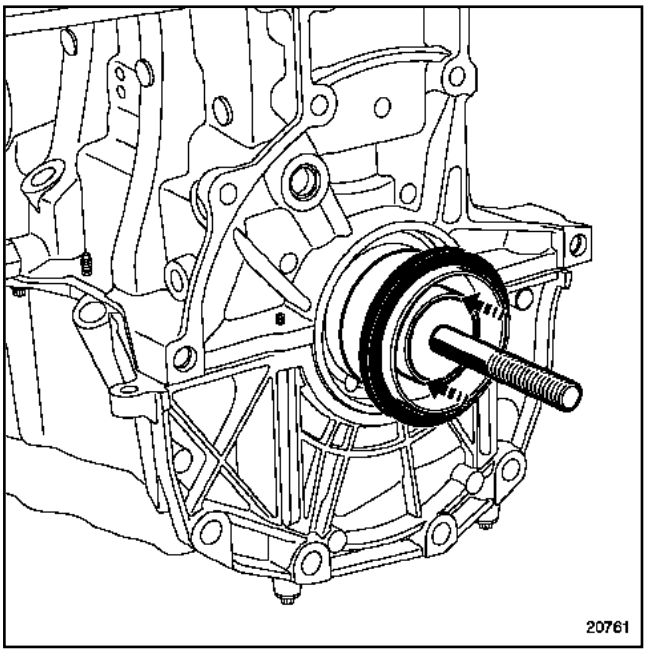

20761

Fit the protector with its seal in place on the **(Mot. 1585)** , taking care not to touch the seal.

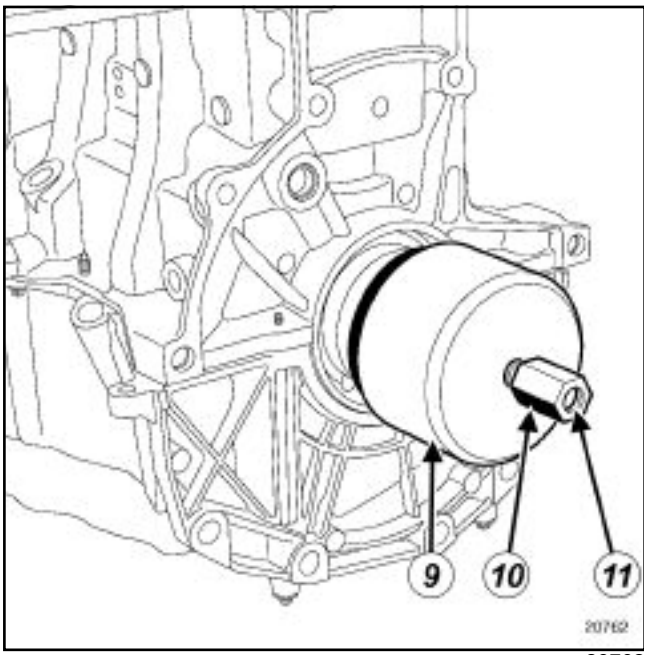

20762

Fit cover (**9**) and nut (**10**) (with the thread (**11**) of the nut towards the outside of the engine).

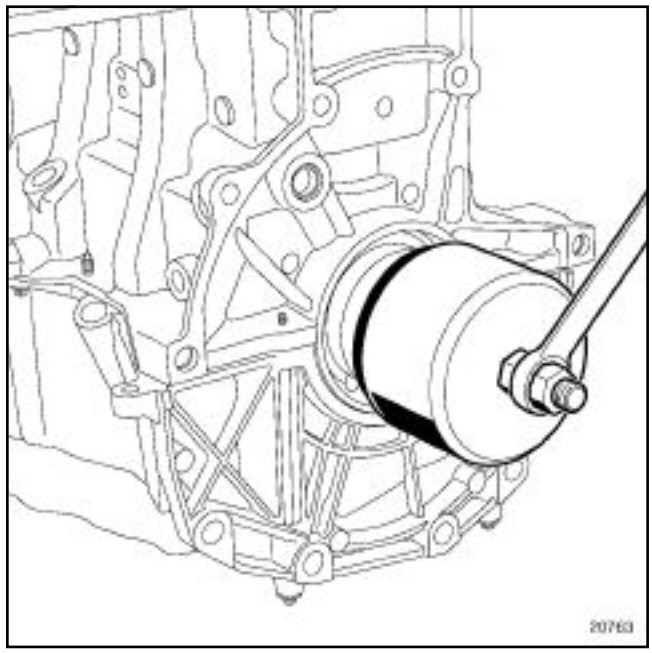

20763

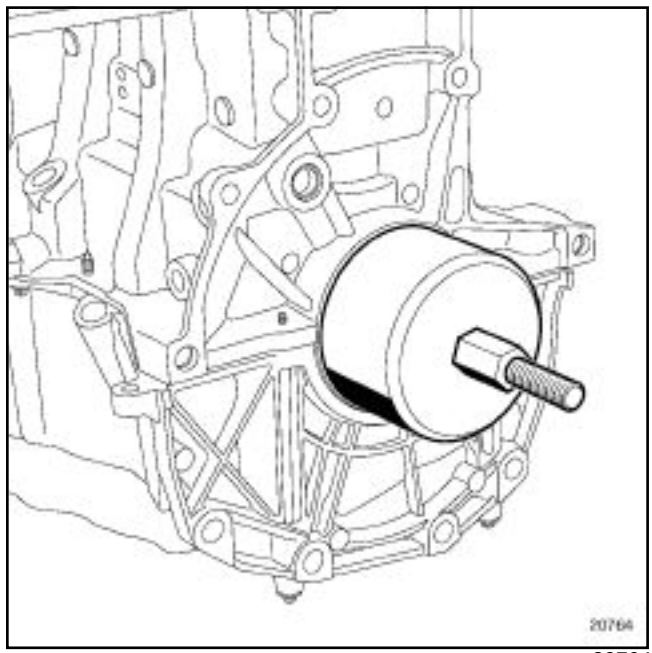

20764

Screw on the nut until the cover touches the cylinder block.

K9K, and 274 or 276 or 712 or 714 or 716 or 718 or 724 or 728 or 729 or 760 or 762 or 766 or 768

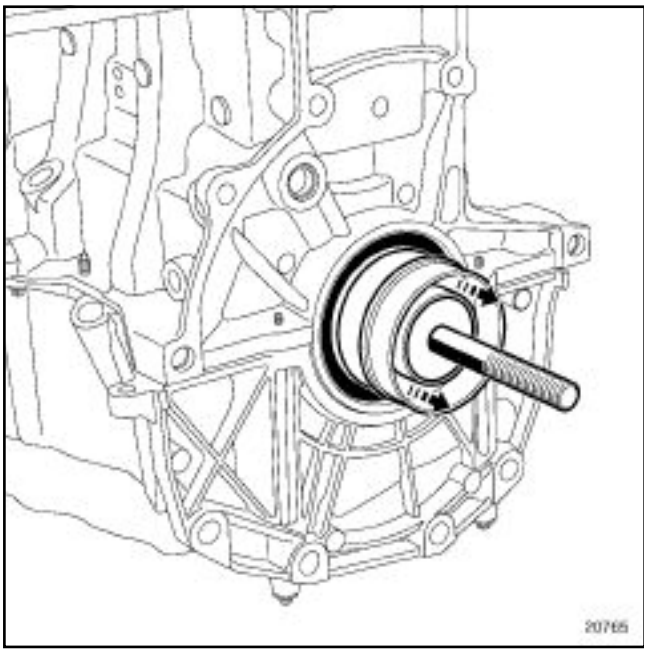

20765

Remove:

- the nut,
- the cap,
- the protector,
- the base.

Refit a new O-ring seal to the coolant pump inlet pipe.

Put a little soapy water on the O-ring seal of the coolant pump inlet pipe.

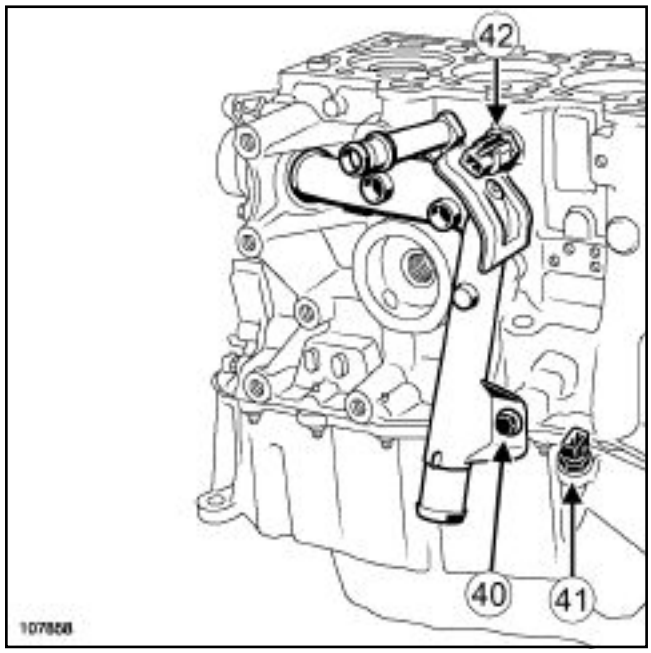

107858

Refit:

- the coolant pump inlet pipe,
- the mounting bolt (**40**) of the coolant pump inlet pipe,
- the oil level sensor (**41**) ,
- the acceleration meter (**42**) .

Tighten to torque:

- **the coolant pump inlet pipe mounting bolt (22 ± 2.2 Nm)** .
- **the oil level sensor (25 ± 2.5 Nm)** .
- **the acceleration meter (20 ± 2 Nm)** using the **(Emb. 1596)** .

Using degreaser, degrease the seal mating face of the cylinder block where it receives the coolant / oil heat exchanger.

K9K, and 274 or 276 or 712 or 714 or 716 or 718 or 724 or 728 or 729 or 760 or 762 or 766 or 768

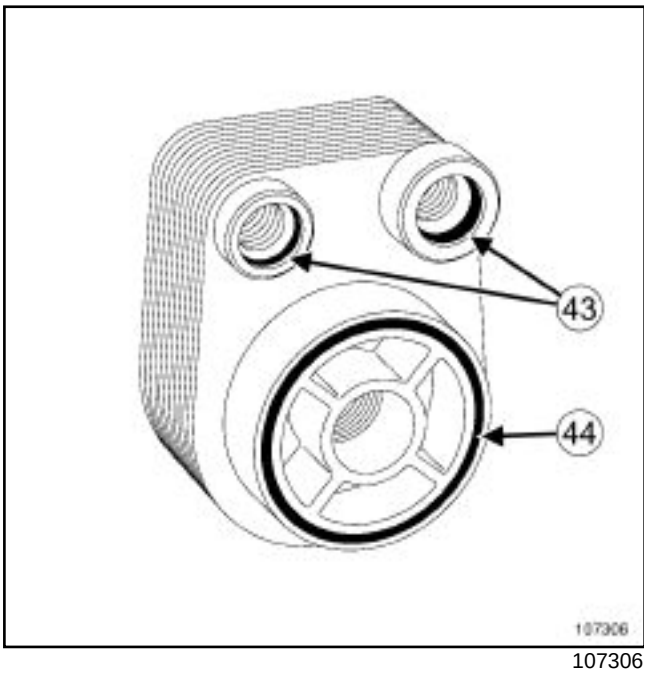

107306

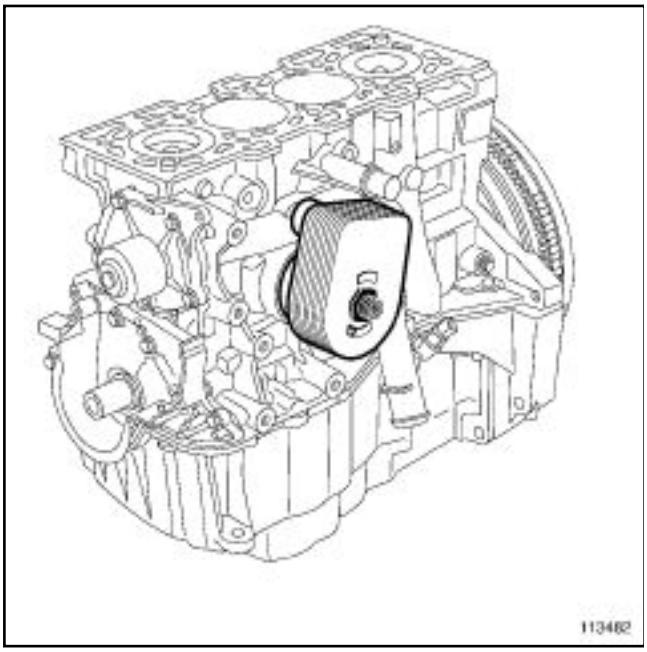

113482

Fit the new seals (**43**) and (**44**) on the coolant/oil heat exchanger.

Apply soapy water to the two seals (**43**) in contact with the inlet pipe of the coolant pump.

Apply two drops of **HIGH-RESISTANCE BOLT LOCKING PRODUCT** to the coolant/oil heat exchanger mounting bolt.

Refit:

- the coolant/oil heat exchanger,
- the mounting bolt of the oil/coolant heat exchanger,

Tighten to torque **the coolant/oil heat exchanger mounting bolt (45 ± 4.5 Nm)** .

Using degreaser, degrease the seal mating face of the coolant / oil heat exchanger where it receives the oil filter holder.

Refit:

- a new seal on the oil filter holder,
- a new seal on the oil filter holder mounting bolt.

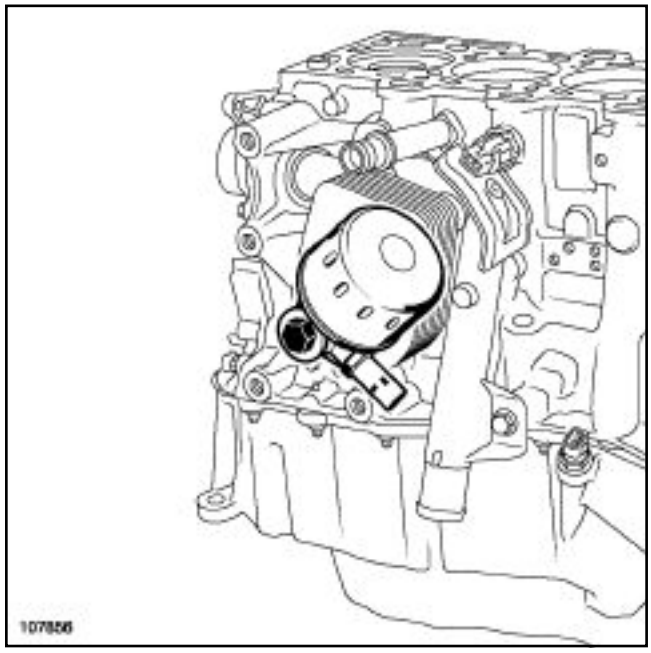

107856

Refit:

- the oil filter holder,
- the oil filter holder mounting bolt

Tighten to torque the **oil filter holder mounting bolt (45 ± 4.5 Nm)** .

Lubricate the oil filter seal with new engine oil.

Refit the oil filter using the **(Mot. 1329)** .

Tighten to torque the **oil filter (14 ± 2 Nm)** .

K9K, and 274 or 276 or 712 or 714 or 716 or 718 or 724 or 728 or 729 or 760 or 762 or 766 or 768

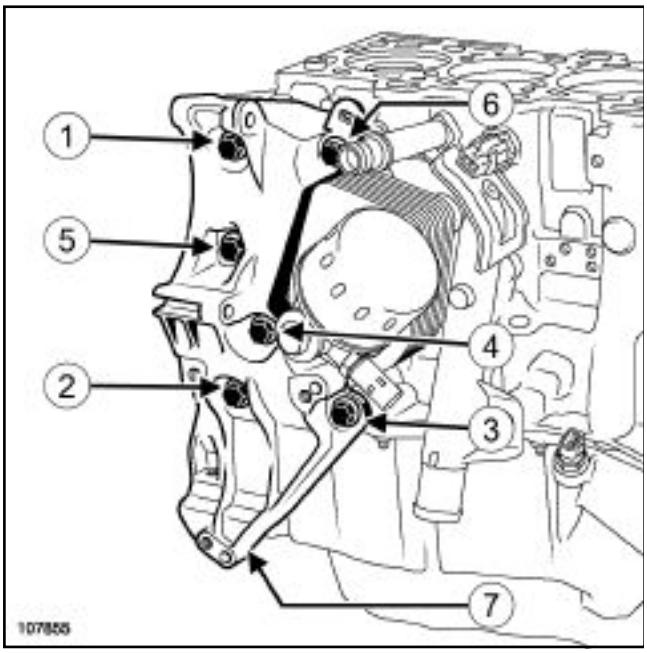

107855

Refit:

- the multifunction support,
- the multifunction support mounting bolts.

Tighten to torque and in order **the multifunction support mounting bolts (1 to 6) (44 ± 4.4 Nm)** .

Torque tighten the **multifunction support mounting bolt (7) (21 ± 2.1 Nm)** .

K9K, and 274 or 276 or 712 or 714 or 716 or 718 or 724 or 728 or 729 or 760 or 762 or 766 or 768

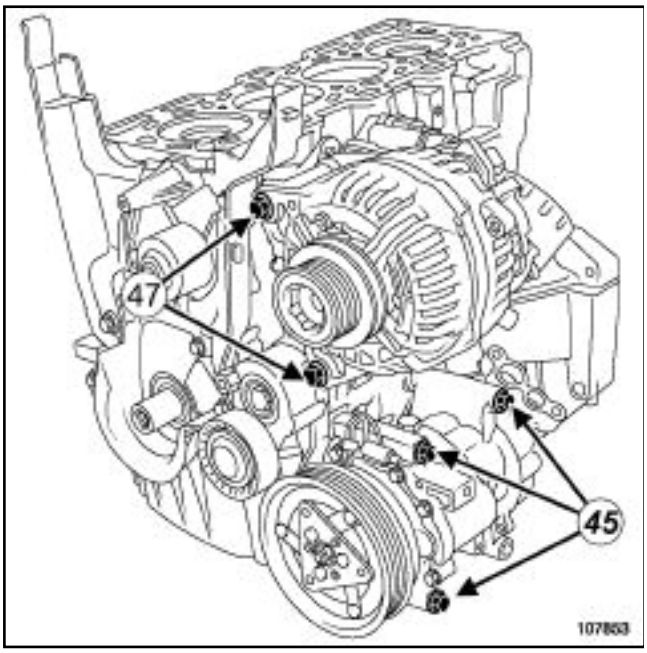

107853

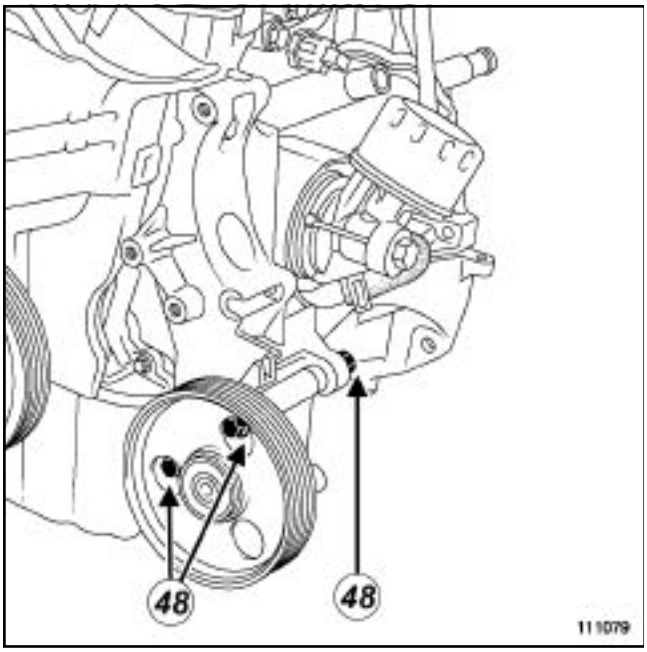

111079

Refit:

- the power assisted steering pump or the dummy pulley,
- the mounting bolts (**48**) of the power assisted steering pump or the dummy pulley,
- the air conditioning compressor (if fitted),
- the air conditioning compressor mounting bolts (**45**) ,
- the alternator,
- the alternator mounting bolts (**47**) .

Tighten to torque:

- **the mounting bolts of the power assisted steering pump or the dummy pulley (21 ± 2.1 Nm)** ,
- **the air conditioning compressor mounting bolts (21 ± 2.1 Nm)** ,
- **the alternator mounting bolts (21 ± 2.1 Nm)** .

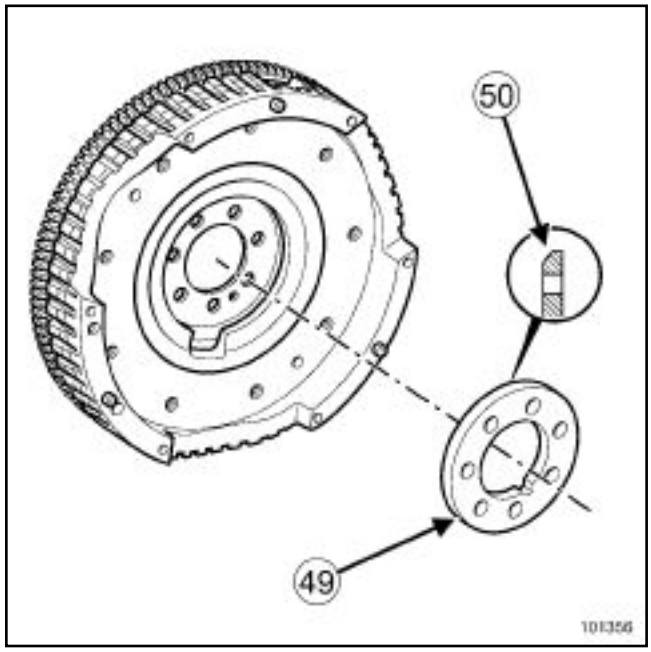

101356

Note:

Certain flywheels have a shim (**49**) . **It is essential to position the chamfer** (**50**) **of the shim on the flywheel side** .

K9K, and 274 or 276 or 712 or 714 or 716 or 718 or 724 or 728 or 729 or 760 or 762 or 766 or 768

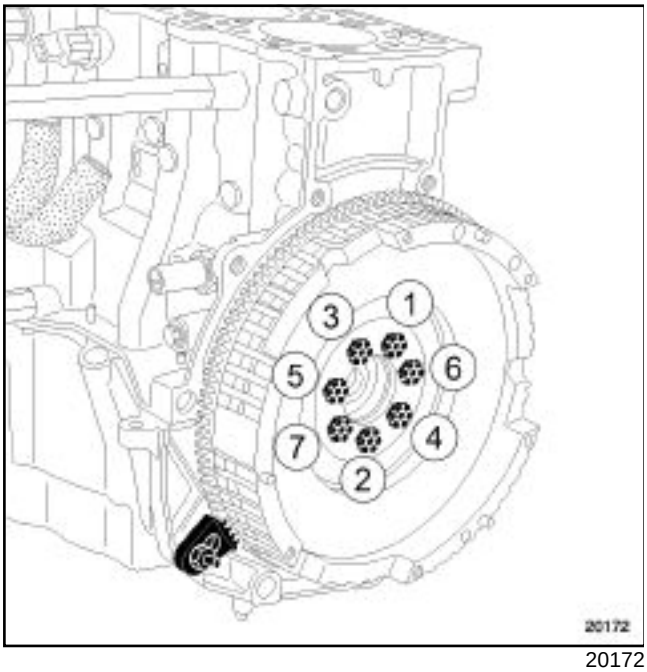

20172

Refit:

- the flywheel,
- the new flywheel mounting bolts,
- the engine flywheel locking tool **(Mot. 1677)** .

Tighten to torque and in order the **flywheel mounting bolts (55 ± 5.5 Nm)** .

Using degreasing agent, degrease the friction face on the flywheel.

Refit the friction plate (aligning it correctly).

Centre the friction plate using the **(Emb. 1780)** .

Using degreasing agent, degrease the friction face on the clutch mechanism.

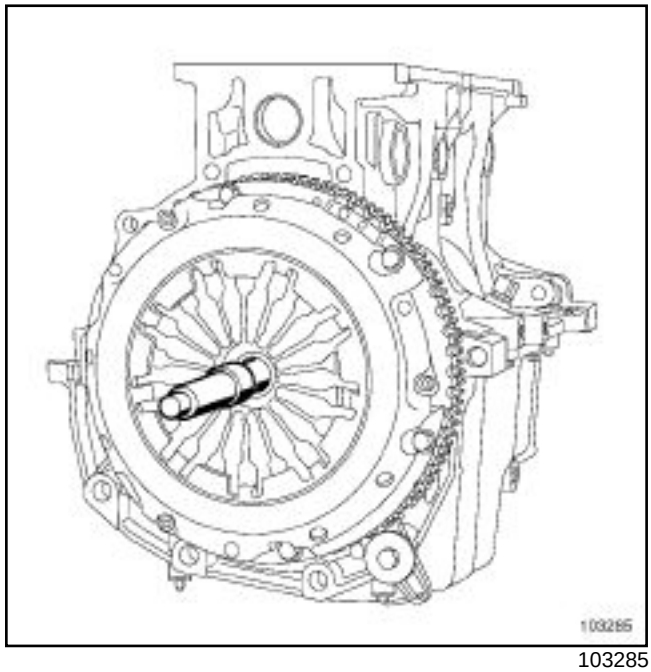

103285

Refit:

- the clutch pressure plate,
- the clutch mechanism mounting bolts.

Gradually tighten the mounting bolts of the clutch pressure plate.

Tighten to torque **the clutch mechanism mounting bolts (M6 to 14 ± 1.4 Nm and bolts M7 to 20 ± 2 Nm)** .

Remove flywheel immobiliser tool **(Mot. 1677)** .

K9K, and 732 or 764

Special tooling required	
Mot. 1018	Sump plug tool.
Mot. 1586	Tool for fitting PTFE crankshaft seal, timing end.
Mot. 1714	Adapter for fitting PTFE crankshaft seal, timing end.
Mot. 1585	Tool for fitting PTFE crankshaft seal, flywheel end.
Mot. 1677	Flywheel locking tool.
Emb. 1780	Set of clutch disc centring mandrels.
Emb. 1761	Clutch pressure plate removal/refitting kit
Mot. 1329	Oil filter removing tool (76 mm diameter).

Tightening torques ▽	
oil pump mounting bolts	**25 ± 2.5 Nm**
the crankshaft nose closure unit mounting bolts	**11 ± 1.1 Nm**
the coolant pump mounting bolts	**11 ± 1.1 Nm**
the engine oil sump mounting bolts	**14 ± 1.4 Nm**
the drain plug of the engine oil sump	**20 ± 2 Nm**
the flywheel mounting bolts	**2 ± 20 Nm + 36° ± 6°**
clutch mechanism bolt	**14 ± 1.4 Nm**
the clutch mechanism bolt	**14 ± 1.4 Nm**
the coolant pump inlet pipe mounting bolt	**22 ± 2.2 Nm**
the oil level sensor	**25 ± 2.5 Nm**

Tightening torques ▽	
the coolant/oil heat exchanger mounting bolt	**45 ± 4.5 Nm**
oil filter holder mounting bolt	**45 ± 4.5 Nm**
oil filter	**14 ± 2 Nm**
the multifunction support mounting bolts (1 to 6)	**44 ± 4.4 Nm**
multifunction support mounting bolt (7)	**21 ± 2.1 Nm**
air conditioning compressor mounting bolts	**21 ± 2.1 Nm**
the alternator mounting bolts	**21 ± 2.1 Nm**

I - RECOMMENDATIONS FOR REPAIR

IMPORTANT
Wear protective gloves during every operation.

K9K, and 732 or 764

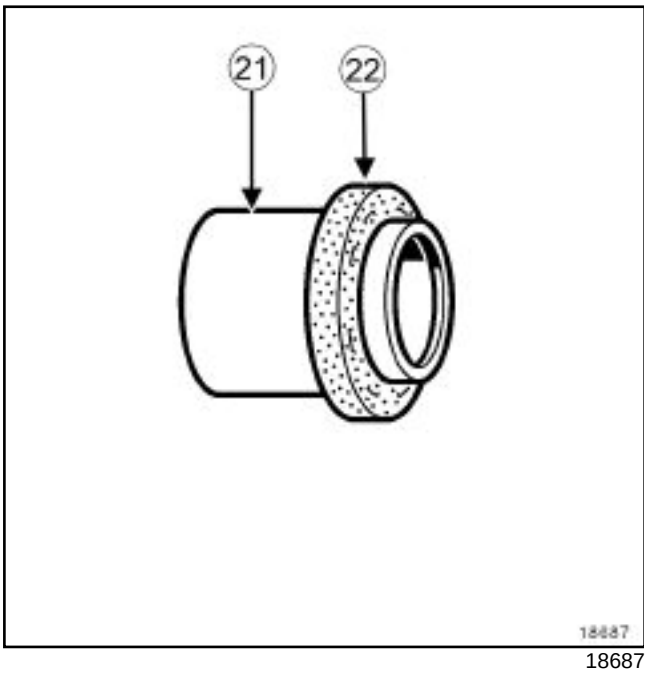

18687

WARNING

This type of seal is very delicate. When handling, it is essential to grip protective piece. (**21**) It is strictly forbidden to touch seal, (**22**) this is to prevent any oil leaks once the oil seal is fitted to the engine.

The sealing surfaces must be clean, dry and free from grease (avoid finger marks).

Applying excess sealant could cause it to be squeezed out when parts are tightened. A mixture of sealant and fluid could damage certain components (engine, radiator, etc.)

II - PARTS AND CONSUMABLES FOR THE REPAIR

Parts always to be replaced

- The crankshaft nose closure unit seal,
- The coolant pump seal,
- The oil sump mounting seal,
- The clutch mechanism (if necessary),
- The friction disc (if necessary),
- Flywheel mounting bolt
- The coolant pump inlet pipe seal,
- The oil / coolant heat exchanger seals,
- The crankshaft, timing end, mounting seal,
- The crankshaft, flywheel end, mounting seal,
- Oil filter,
- The seal of the drain plug of the engine oil sump.

Consumables

- Degreasing agent, part no. **77 11 224 559** .
- Silicone adhesive sealant, part no. **77 11 227 484** ,
- High-resistance bolt locking product, part no. **77 11 230 112** ,

III - EQUIPMENT REQUIRED

- Torque/angle wrench,
- Torque wrench
- Cylinder head bolt tightening gauge (angular measuring type),
- Ruler,
- Square section drain wrench, male **8 mm** ,
- Male torx socket.
- Oil can,

IV - REASSEMBLING THE CYLINDER BLOCK

Put a little engine oil from an oil can in the oil pump via the oil sump filter.

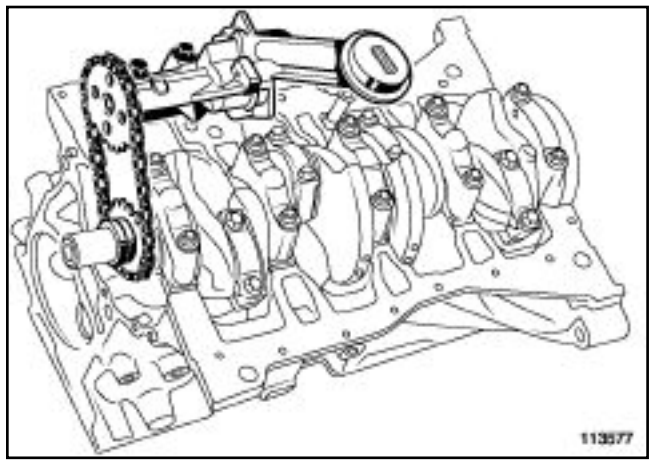

113577

Refit:

- the oil pump drive sprocket,
- the oil pump complete with its chain,
- the oil pump mounting bolts.

Tighten to torque the **oil pump mounting bolts (25 ± 2.5 Nm)** .

Apply degreaser to:

- the crankshaft nose closure panel,
- the coolant pump,

K9K, and 732 or 764

- the surface of the seal of the crankshaft nose closure unit on the cylinder block,
- the surface of the coolant pump seal on the cylinder block.

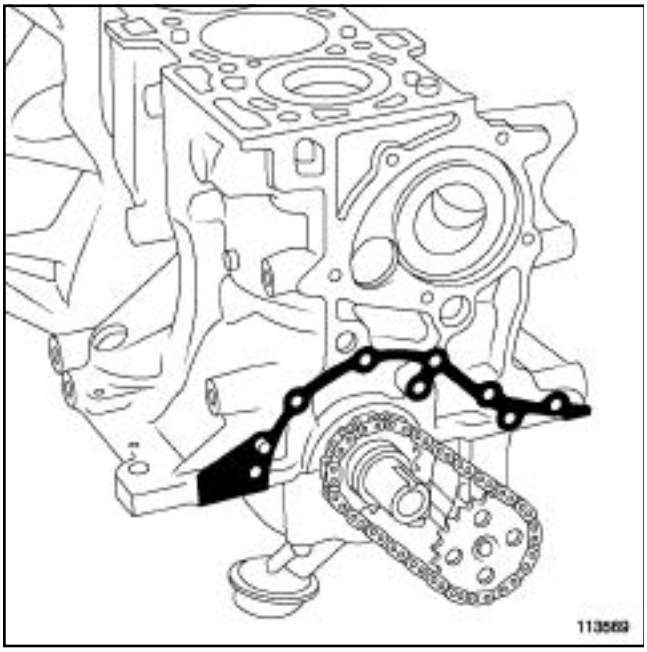

113569

Fit a new seal to the crankshaft nose closure unit.

Check for the centring dowels on the crankshaft nose closure unit.

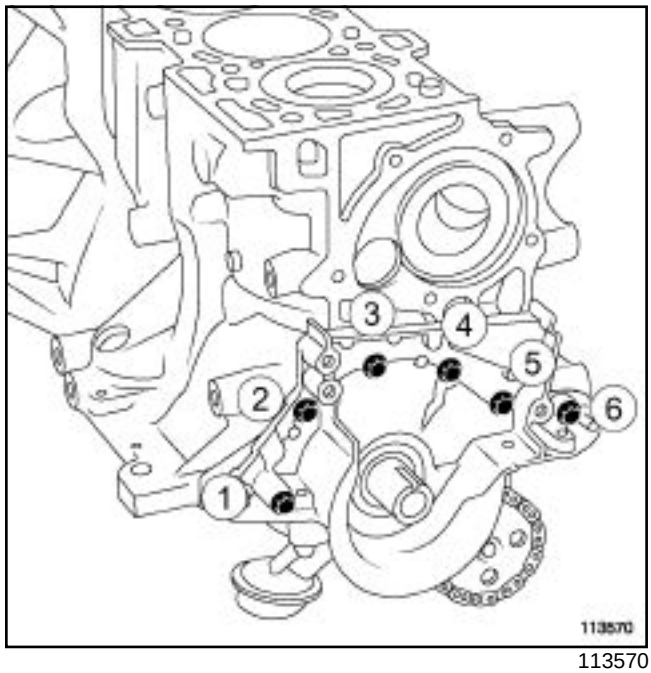

113570

Refit:

- the crankshaft nose closure panel,
- the crankshaft nose closure unit mounting bolt,

Tighten to torque and in order **the crankshaft nose closure unit mounting bolts (11 ± 1.1 Nm)** .

Apply a drop of **HIGH-RESISTANCE BOLT LOCKING PRODUCT** to the coolant pump mounting bolts.

K9K, and 732 or 764

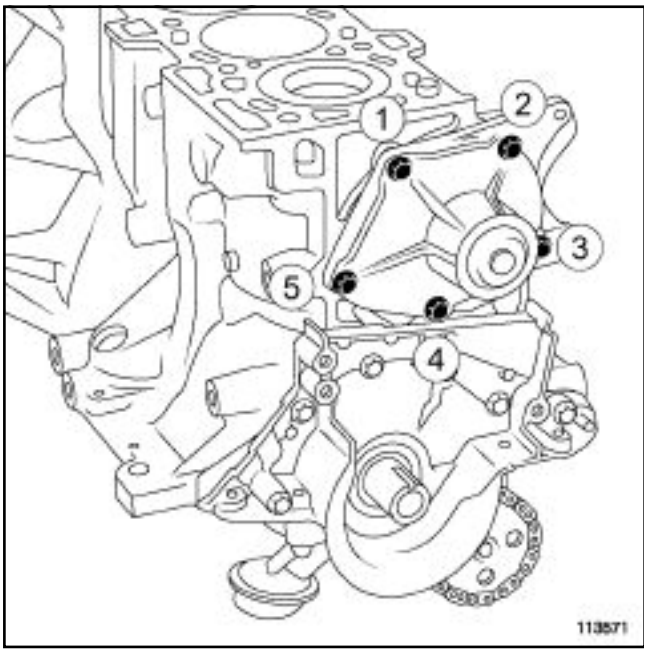

113571

Refit:

- the coolant pump fitted with a new seal,
- the coolant pump mounting bolts.

Tighten to torque and in order **the coolant pump mounting bolts (11 ± 1.1 Nm)** .

Using degreaser, degrease the seal surfaces of the lower part of the cylinder block and the oil sump.

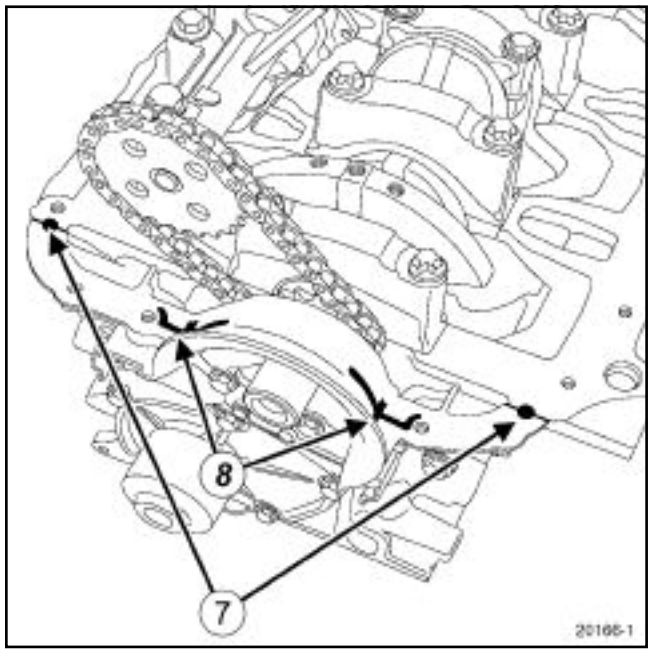

20166

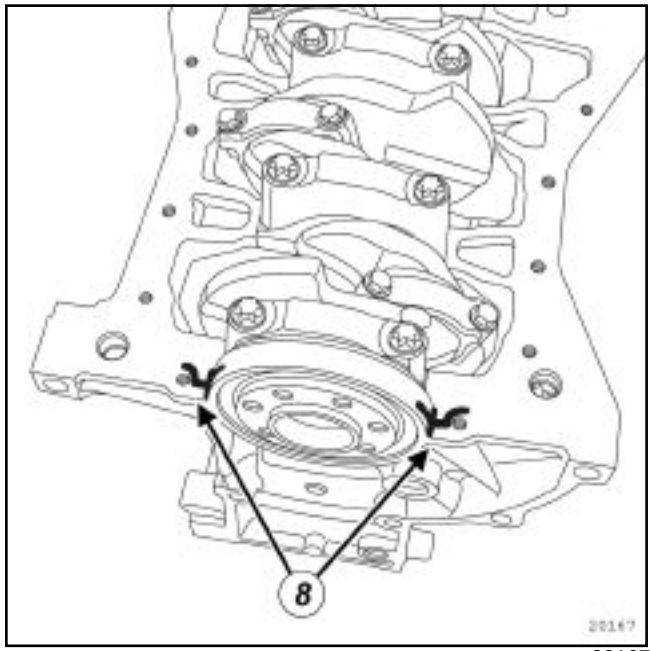

20167

Apply:

- four beads (**8**) of **SILICONE ADHESIVE SEALANT** with a diameter of **5 mm** ,
- two points (**7**) of **SILICONE ADHESIVE SEALANT 5 mm** in diameter, at the connection between the crankshaft nose closure panel and the cylinder block.

K9K, and 732 or 764

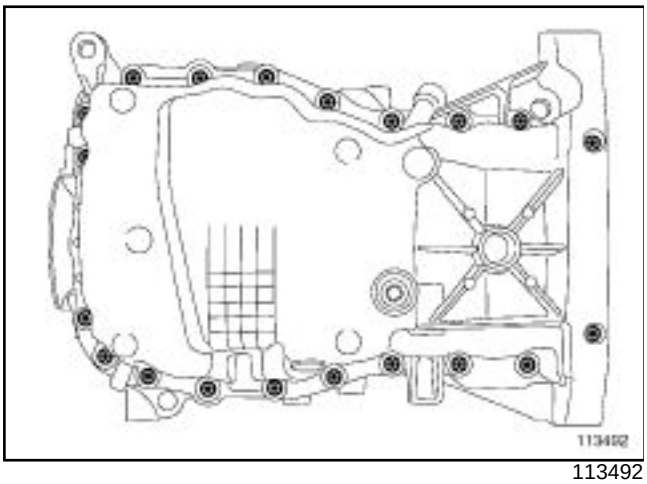

113492

Refit:

- the oil sump mounting seal,
- the engine oil sump,
- the oil sump mounting bolts,

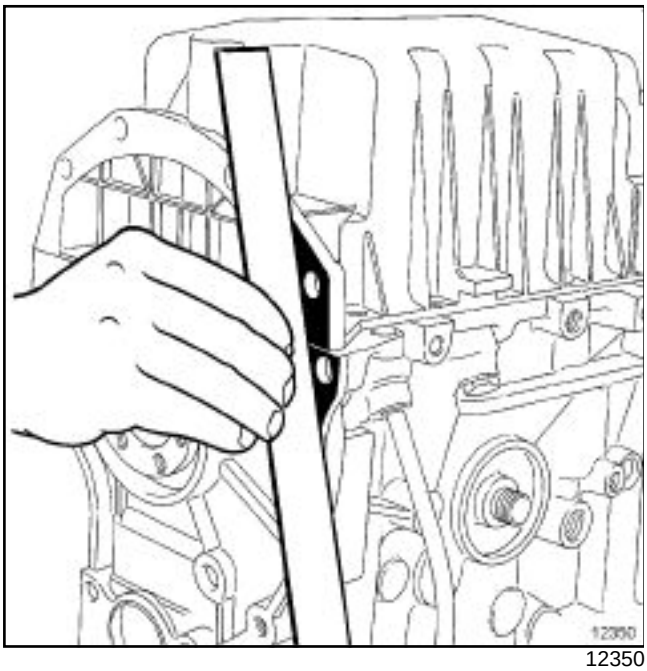

12350

Using a ruler, align the engine oil sump with the cylinder block.

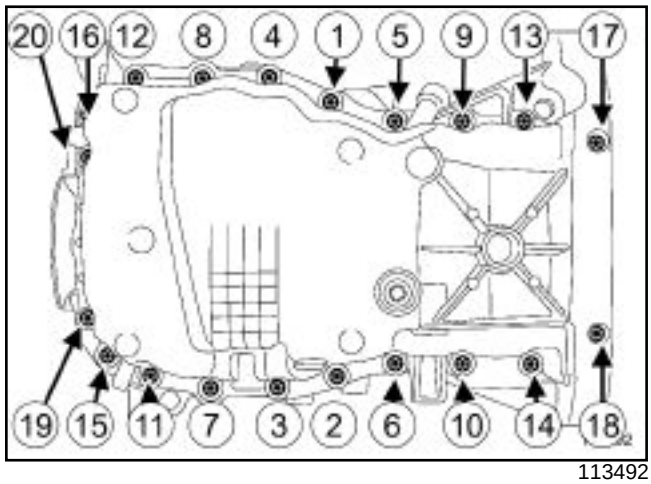

113492

Tighten to torque and in order **the engine oil sump mounting bolts (14 ± 1.4 Nm)** .

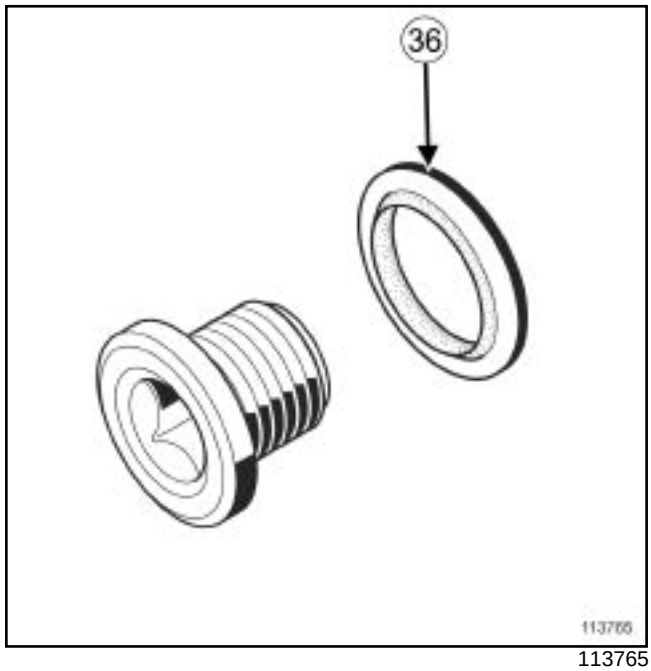

113765

Refit:

- a seal (**36**) on the drain plug of the engine oil sump,
- the drain plug of the engine oil sump, using the **(Mot. 1018)** .

Tighten to torque **the drain plug of the engine oil sump (20 ± 2 Nm)** .

Using degreaser, degrease the seal mating face on the crankshaft and the crankshaft nose closure unit.

K9K, and 732 or 764

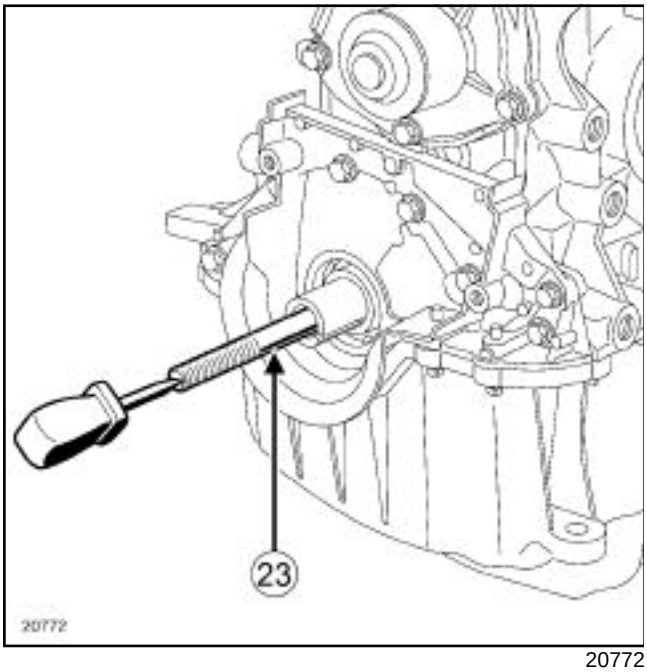

20772

Tighten the threaded rod (**23**) :

- of tool **(Mot. 1586)** in the crankshaft with an internal thread of **M12** ,
- of tool **(Mot. 1714)** in the crankshaft with an internal thread of **M14** ,

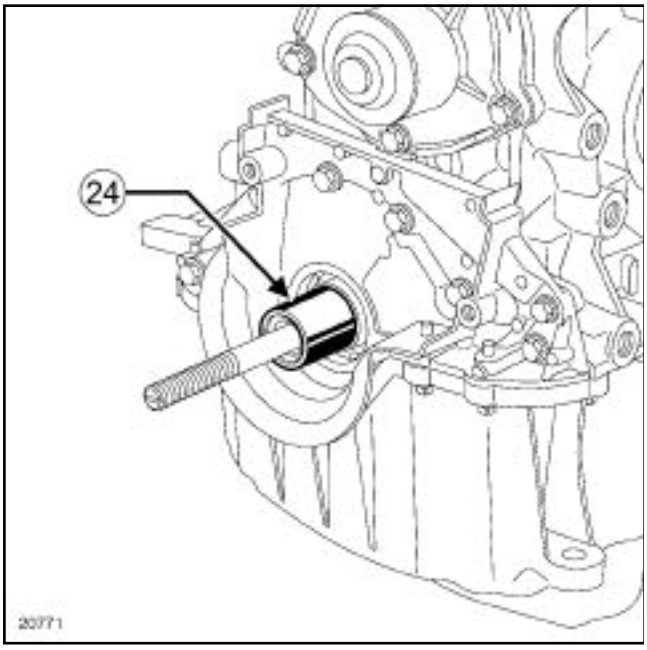

20771

Insert the spacer (**24**) of tool **(Mot. 1586)** in the crankshaft.

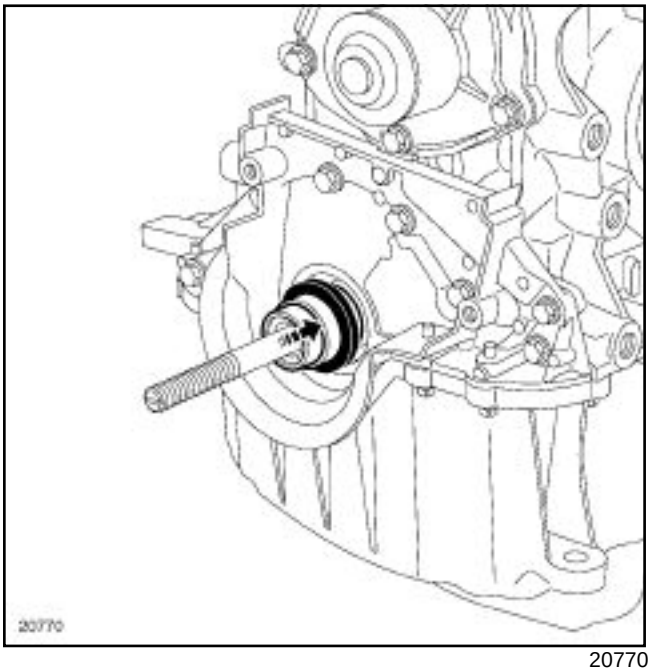

20770

Fit the protector with the new seal in place on the spacer, taking care not to touch the seal.

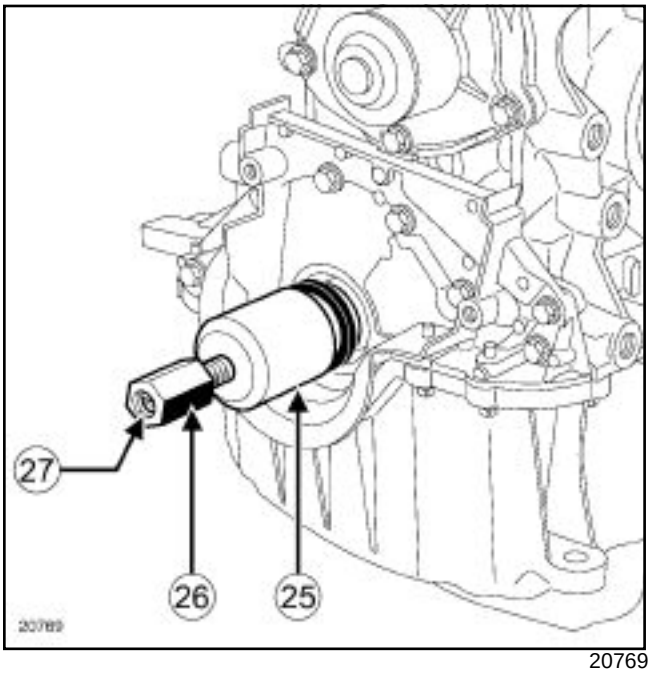

20769

Fit cover (**25**) and nut (**26**) (with the thread (**27**) of the nut towards the outside of the engine).

K9K, and 732 or 764

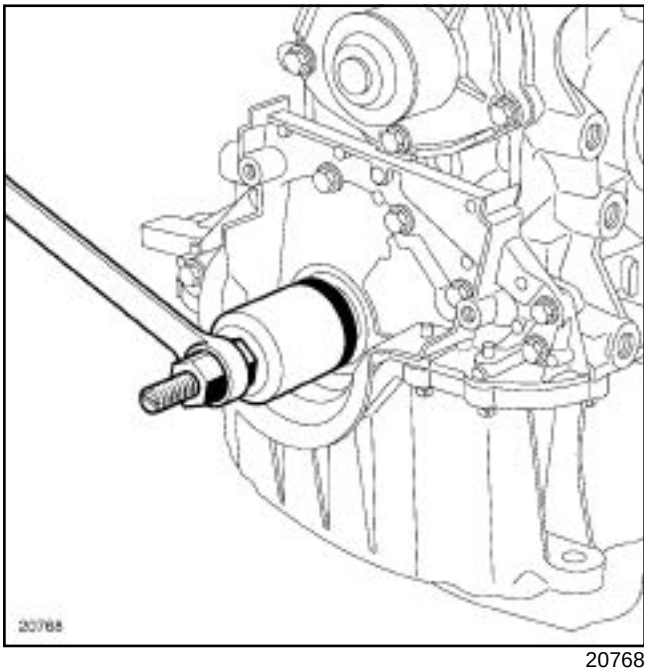

20768

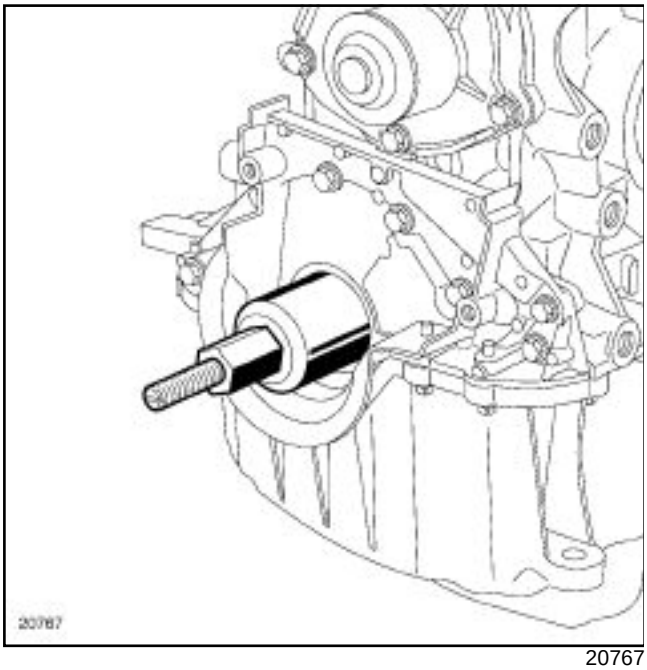

20767

Screw on the nut until the cover touches the spacer.

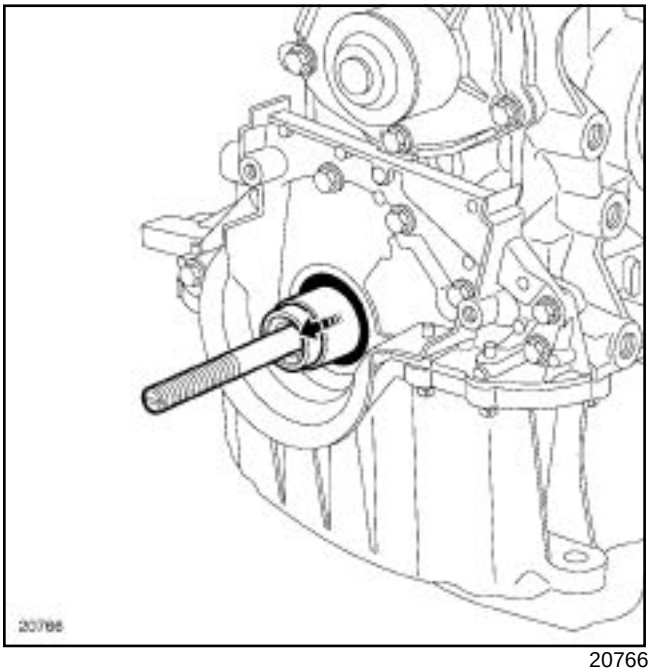

20766

Remove:

- the nut,
- the cap,
- the protector,
- the spacer,
- the threaded rod.

Using degreaser, degrease the seal mating face on the crankshaft and the cylinder block (flywheel end).

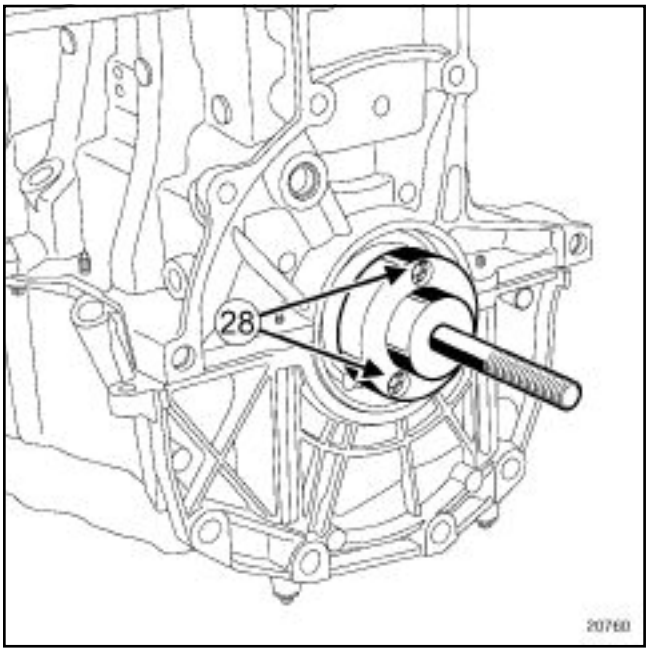

20760

Mount the **(Mot. 1585)** on the crankshaft, securing it using bolts (**28**) .

K9K, and 732 or 764

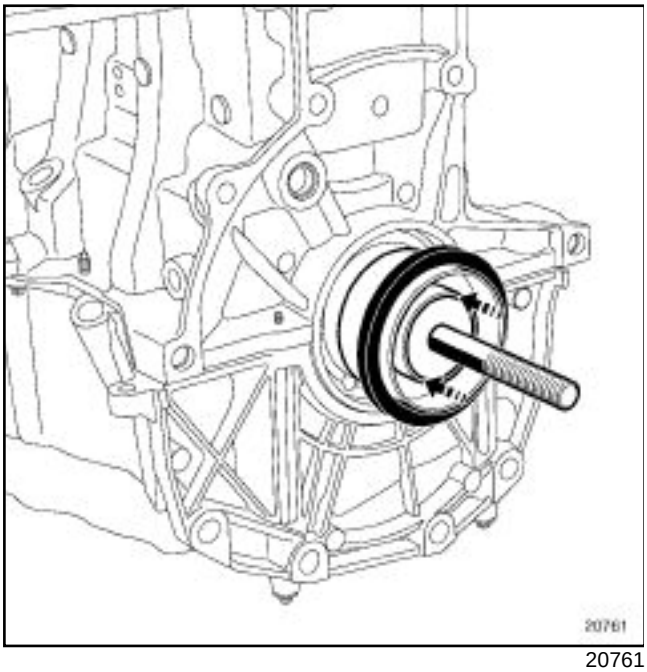

20761

Fit the protector with its seal in place on tool, **(Mot. 1585)** taking care not to touch the seal.

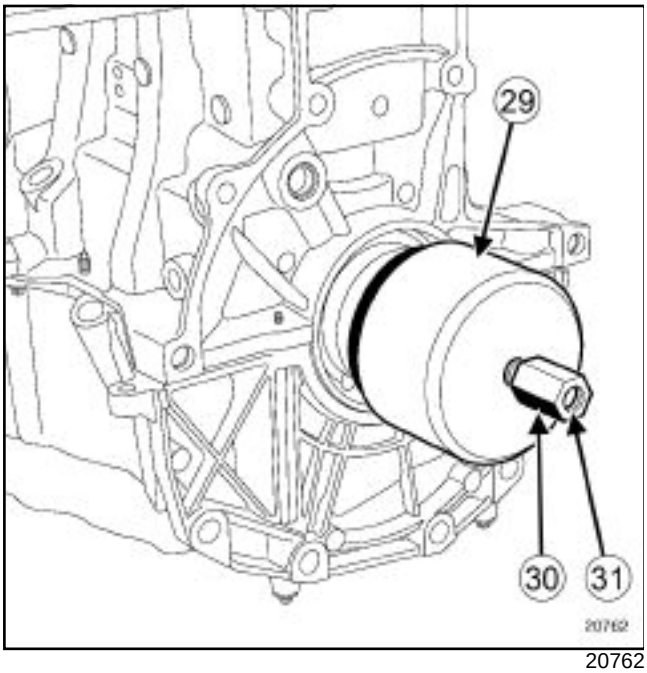

20762

Fit cover (**29**) and nut (**30**) (with the thread (**31**) of the nut towards the outside of the engine).

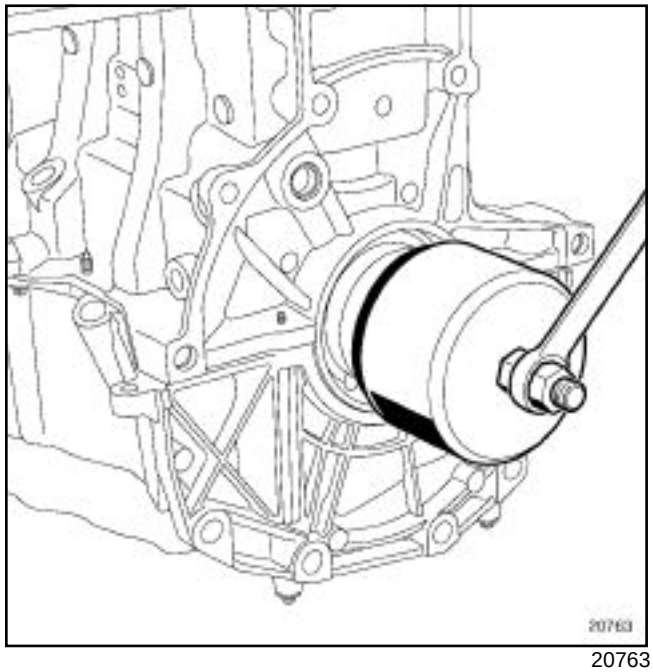

20763

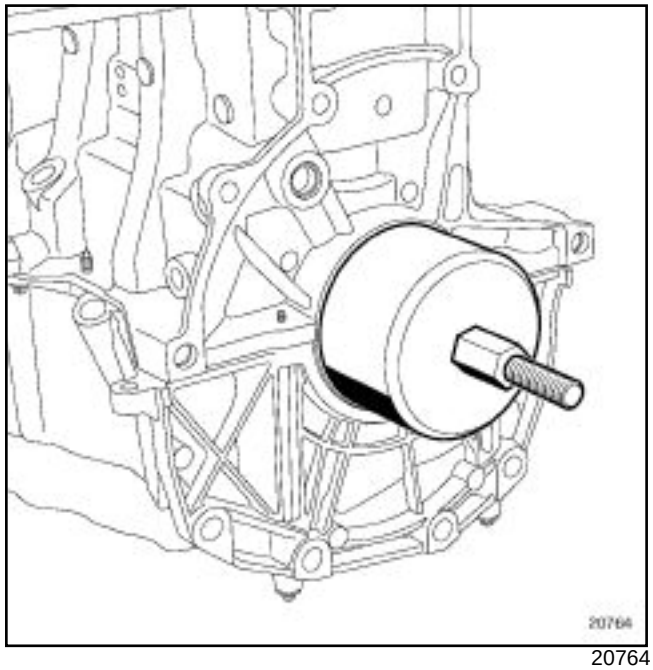

20764

Tighten the nut until the cover touches the cylinder block.

K9K, and 732 or 764

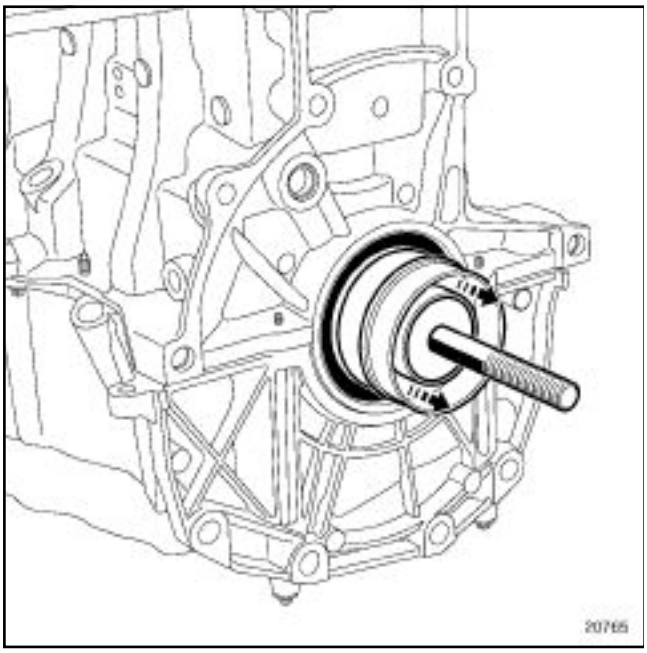

20765

Remove:

- the nut,
- the cap,
- the protector,
- the base.

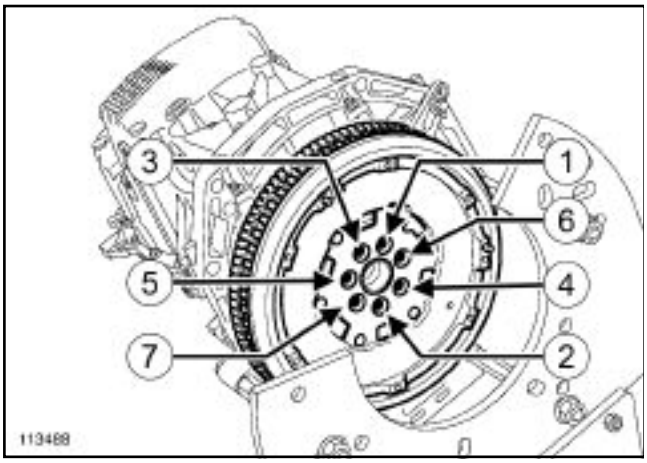

113488

Refit:

- the flywheel,
- the new flywheel mounting bolts,
- engine flywheel locking tool **(Mot. 1677)** .

Tighten to torque and in order **the flywheel mounting bolts (2 ± 20 Nm + 36° ± 6°)** .

Using degreasing agent, degrease the friction face on the flywheel.

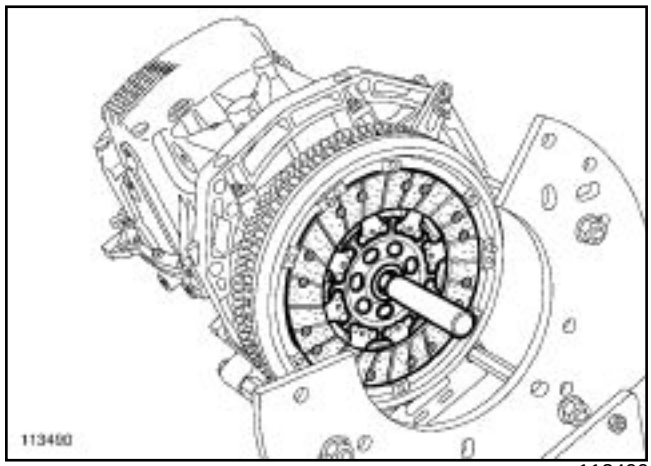

113490

Refit the friction disc (aligning it correctly).

Centre the friction disc using the **(Emb. 1780)** .

Using degreasing agent, degrease the friction face on the clutch mechanism.

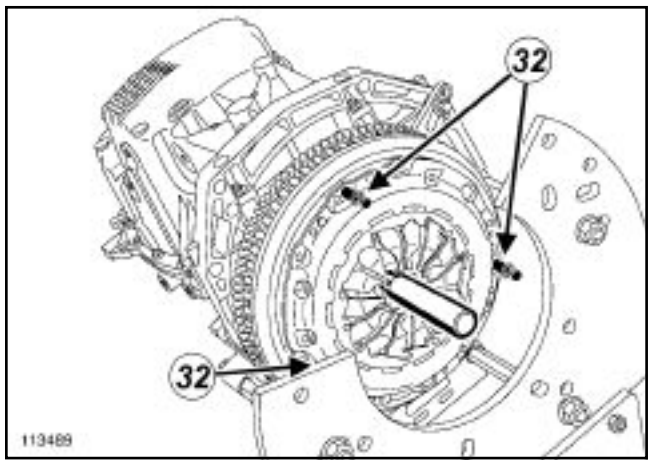

113489

Refit the clutch mechanism.

Position the mounting bolts of the clutch mechanism using tool **(Emb. 1761)** (**32**) .

Position the clutch mechanism flat against the flywheel, tightening the nuts of tool **(Emb. 1761)** .

Refit the clutch mechanism mounting bolts.

Tighten to torque the **clutch mechanism bolt (14 ± 1.4 Nm)** .

Remove the **(Emb. 1761)** .

Refit the three clutch mechanism mounting bolts.

Tighten to torque **the clutch mechanism bolt (14 ± 1.4 Nm)** .

Remove flywheel immobiliser tool **(Mot. 1677)** .

Refit a new o-ring seal to the coolant pump inlet pipe.

K9K, and 732 or 764

Put a little soapy water on the o-ring seal of the coolant pump inlet pipe.

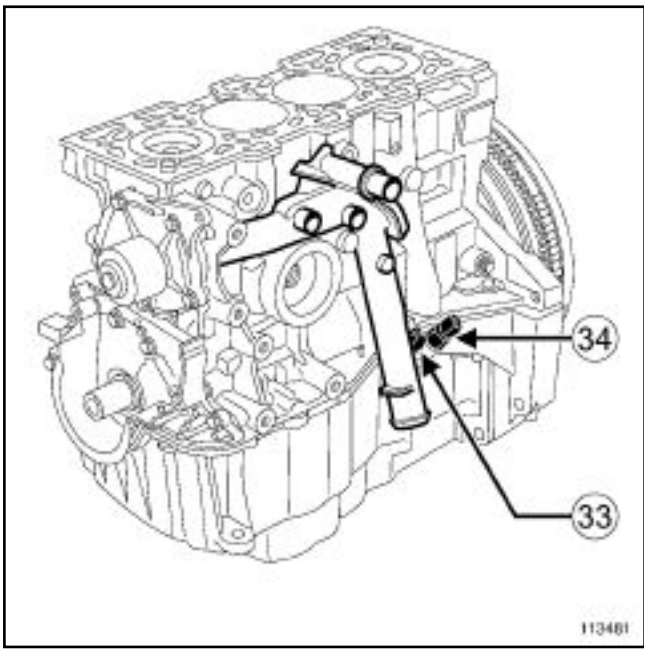

113481

Refit:

- the coolant pump inlet pipe,
- the mounting bolt (**33**) of the coolant pump inlet pipe,
- the oil level sensor (**34**) .

Tighten to torque:

- **the coolant pump inlet pipe mounting bolt (22 ± 2.2 Nm)** ,
- **the oil level sensor (25 ± 2.5 Nm)** .

Using degreaser, degrease the seal mating face of the cylinder block where it receives the coolant / oil heat exchanger.

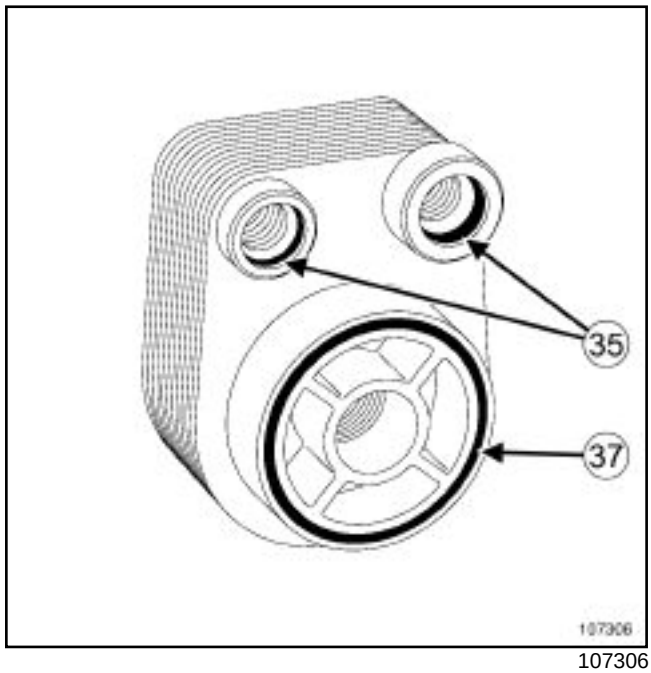

107306

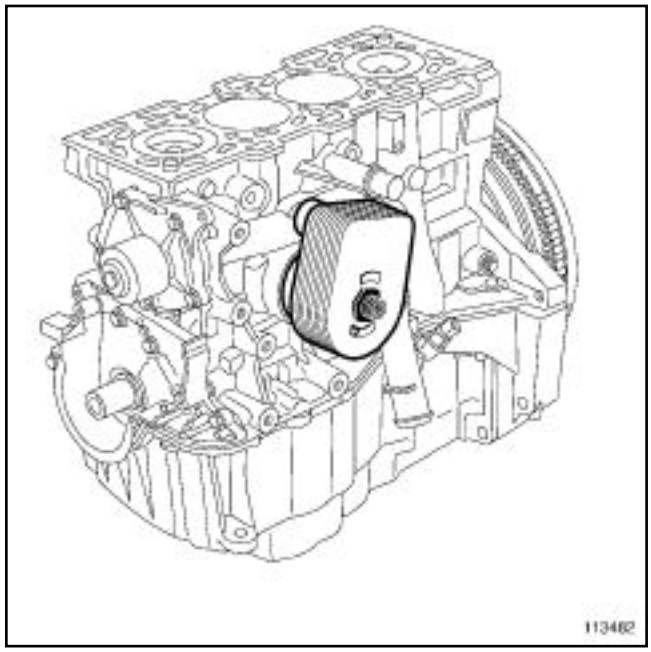

113482

Fit the new seals (**35**) and (**37**) on the coolant / oil heat exchanger.

Apply soapy water to the two seals (**35**) in contact with the inlet pipe of the coolant pump.

Apply two drops of **HIGH-RESISTANCE BOLT LOCKING PRODUCT** to the coolant / oil heat exchanger mounting bolt.

Refit:

- the coolant/oil heat exchanger,
- the mounting bolt of the oil/coolant heat exchanger,

K9K, and 732 or 764

Tighten to torque **the coolant/oil heat exchanger mounting bolt (45 ± 4.5 Nm)** .

Using degreaser, degrease the seal mating face of the coolant/oil heat exchanger where it receives the oil filter holder.

Refit:

- a new seal on the oil filter holder,
- a new seal on the oil filter holder mounting bolt.

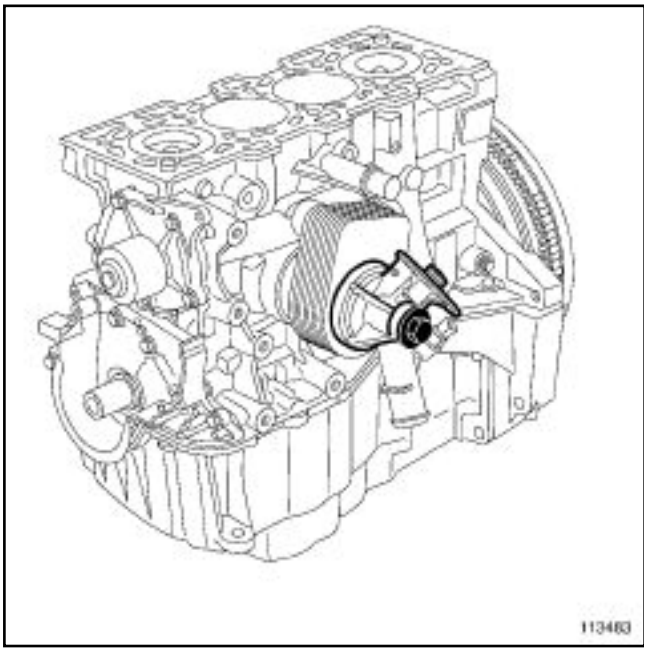

113483

Refit:

- the oil filter holder,
- the oil filter holder mounting bolt

Tighten to torque the **oil filter holder mounting bolt (45 ± 4.5 Nm)** .

Lubricate the oil filter seal with new engine oil.

Refit the oil filter using the **(Mot. 1329)** .

Tighten to torque the **oil filter (14 ± 2 Nm)** .

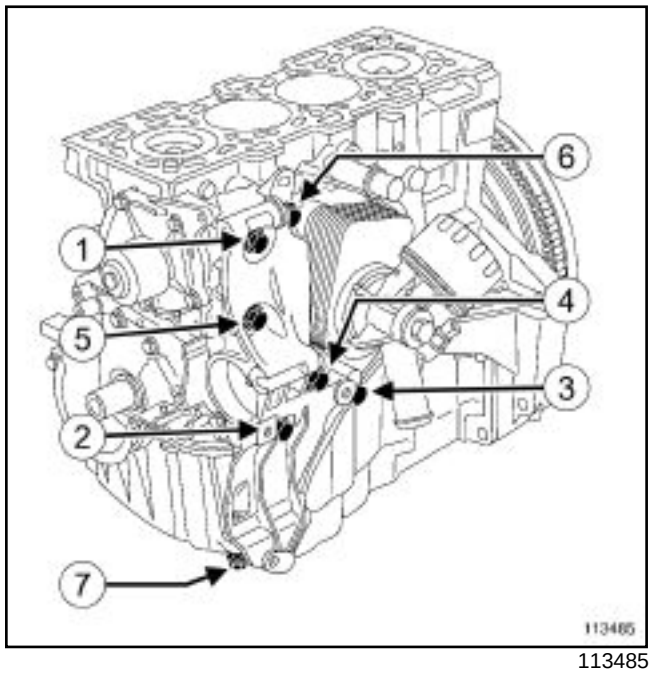

113485

Refit:

- the multifunction support,
- the multifunction support mounting bolts.

Tighten to torque and in order **the multifunction support mounting bolts (1 to 6) (44 ± 4.4 Nm)** .

Torque tighten the **multifunction support mounting bolt (7) (21 ± 2.1 Nm)** .

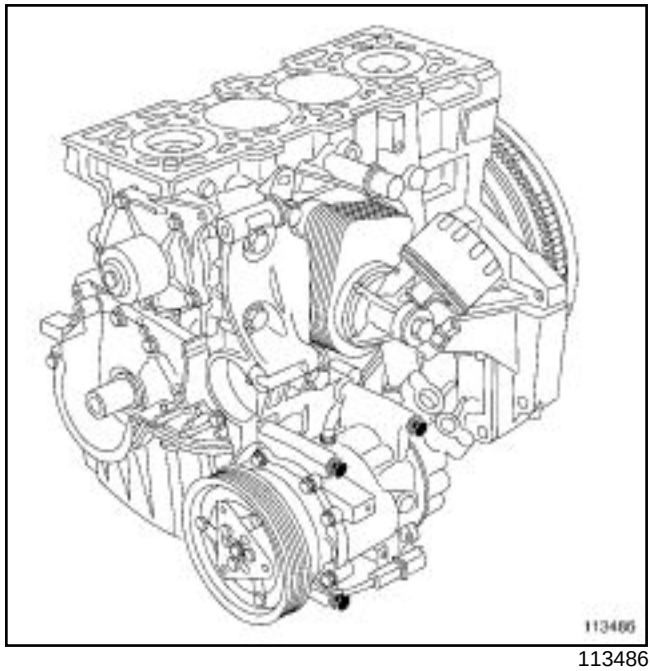

113486

Refit:

- the air conditioning compressor,
- the air conditioning compressor mounting bolts.

K9K, and 732 or 764

Tighten to torque the **air conditioning compressor mounting bolts (21 ± 2.1 Nm)** .

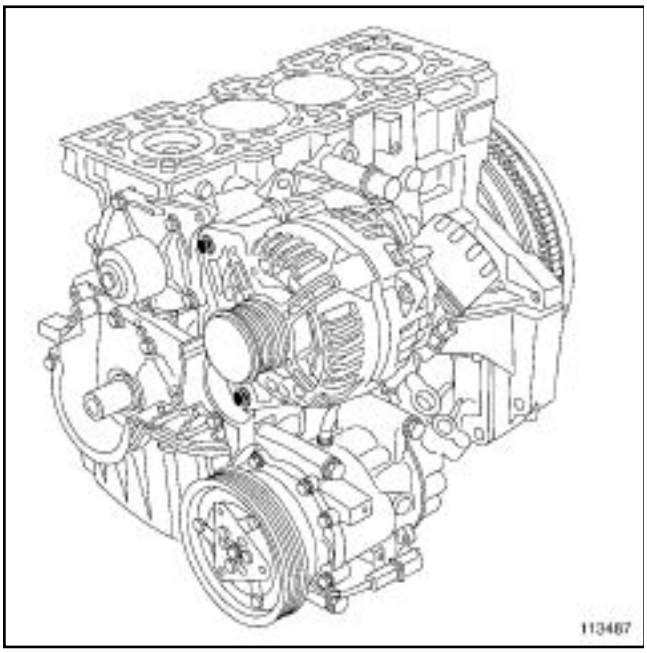

113487

Refit:

- the alternator,
- the alternator mounting bolts.

Tighten to torque **the alternator mounting bolts (21 ± 2.1 Nm)** .

K9K, and 260 or 270 or 272 or 700 or 702 or 704 or 706 or 710 or 712 or 722 or 724 or 728 or 729 or 750 or 752 or 760 or 762 or 790

Special tooling required	
Mot. 1430	Set of 5 crankshaft and camshaft pulley timing pins.
Mot. 1489	TDC locating pin.

Tightening torques ▽	
the cylinder head mounting bolts	**25 ± 2.5 Nm**
the cylinder head mounting bolts	**255° ± 10°**
the rocker cover bolts	**12 ± 1.2 Nm**
the turbocharger oil return pipe mounting bolts	**12 ± 1.2 Nm**
the turbocharger mounting nuts	**26 ± 2.6 Nm**
the catalytic converter stay mounting bolts on the engine	**44 ± 4.4 Nm**
the catalytic converter stay mounting bolts on the catalytic converter	**26 ± 2.6 Nm**
the mounting bolt of the turbocharger oil supply pipe (turbocharger end)	**23 ± 2.3 Nm**
the turbocharger oil supply pipe mounting nut (cylinder head end)	**collar nut 35 ± 3.5 Nm or no collar nut 23 ± 2.3 Nm**
the inner timing cover mounting bolts	**9 ± 0.9 Nm**
the tensioning roller bolt	**27 ± 2.7 Nm**
the crankshaft accessories pulley M12 mounting bolt	**60 ± 6 Nm + 100° ± 10°**
the crankshaft accessories pulley M14 mounting bolt	**120 ± 12 Nm + 95° ± 15°**

Tightening torques ▽	
the tensioning roller bolt	**27 ± 2.7 Nm**
the TDC pin plug cap	**20 ± 2 Nm**
the cylinder head suspended mounting bolts	**21 ± 2.1 Nm**
the high-pressure pump position sensor bolt	**8 ± 0.8 Nm**

I - RECOMMENDATIONS FOR THE REPAIR OF THE CYLINDER HEAD

IMPORTANT
Wear protective gloves during every operation.

WARNING
When handling the cylinder head gasket, it is essential to hold the cylinder head gasket by the part between barrels.

The sealing surfaces must be clean, dry and free from grease (avoid finger marks).

Applying excess sealant could cause it to be squeezed out when parts are tightened. A mixture of sealant and fluid could damage certain components (engine, radiator, etc.)

To obtain correct tightening of the cylinder head bolts, remove any oil from the cylinder head mounting holes using a syringe.

Do not retighten the cylinder head bolts after applying this procedure.

Do not grease the new cylinder head mounting bolts.

II - PARTS AND CONSUMABLES FOR THE REPAIR

Parts always to be replaced for the cylinder head

- The cylinder head gasket,
- The cylinder head bolts,
- The rocker cover gasket,
- The gasket between the exhaust manifold and the turbocharger,
- The seals on the turbocharger oil return pipe,

K9K, and 260 or 270 or 272 or 700 or 702 or 704 or 706 or 710 or 712 or 722 or 724 or 728 or 729 or 750 or 752 or 760 or 762 or 790

- The catalytic converter seal,

Consumables

- Degreasing agent, part no. **77 11 224 559** .
- High-resistance bolt locking product, part no. **77 11 230 112** ,
- Silicone adhesive sealant, part no. **77 11 227 484** .

III - EQUIPMENT REQUIRED FOR THE CYLINDER HEAD

- Torque/angle wrench,
- Torque wrench
- Cylinder head bolt tightening gauge (angular measuring type),
- Oil can,
- Female torx socket (**14**),
- Protective gloves.

IV - REFITTING THE CYLINDER HEAD

Position the pistons at mid-stroke.

Apply degreaser to:

- the combustion side of the cylinder head,
- the combustion face of the cylinder block.

Check for the cylinder head centring dowels on the cylinder block.

Refit the cylinder head gasket (positioning the TOP at the top) on the cylinder block.

Remove the cylinder head from the cylinder head support.

Refit:

- the cylinder head,
- the new cylinder head mounting bolts.

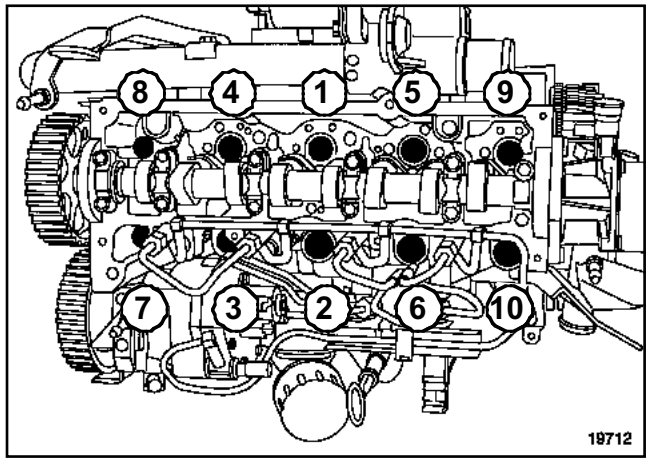

19712

Torque tighten in order **the cylinder head mounting bolts (25 ± 2.5 Nm)** .

Check that all the **cylinder head mounting bolts** are correctly tightened to **(25 ± 2.5 Nm)** .

Tighten in order and to torque **the cylinder head mounting bolts (255° ± 10°)** .

Using degreasing agent, degrease the surface of the rocker cover bearing on the cylinder head.

Fit a new seal on the rocker cover.

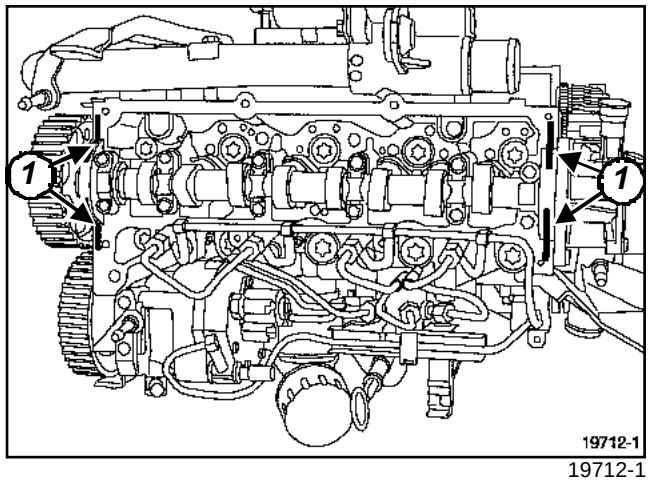

19712-1

Apply four beads (**1**) of **SILICONE SEALANT** with a diameter of **2 mm** .

Refit:

- the rocker cover,
- the rocker cover mounting bolts.

K9K, and 260 or 270 or 272 or 700 or 702 or 704 or 706 or 710 or 712 or 722 or 724 or 728 or 729 or 750 or 752 or 760 or 762 or 790

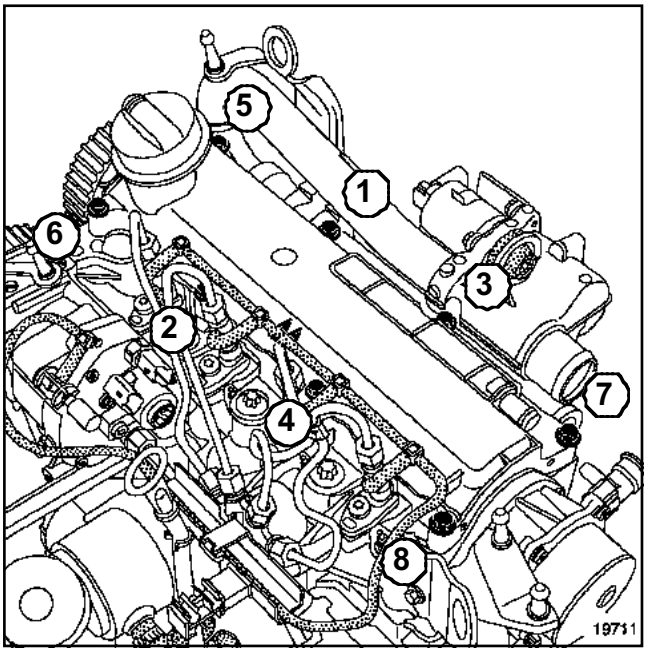

19711

Tighten to torque and in order **the rocker cover bolts (12 ± 1.2 Nm)** .

Fit the new seals on the turbocharger oil return pipe.

Lubricate the O-ring seals of the turbocharger oil return pipe with engine oil.

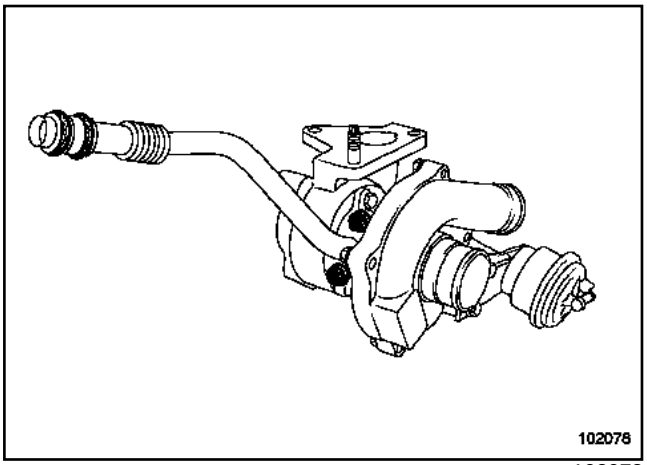

102078

Tighten to torque **the turbocharger oil return pipe mounting bolts (12 ± 1.2 Nm)** .

Fit a new seal between the exhaust manifold and the turbocharger.

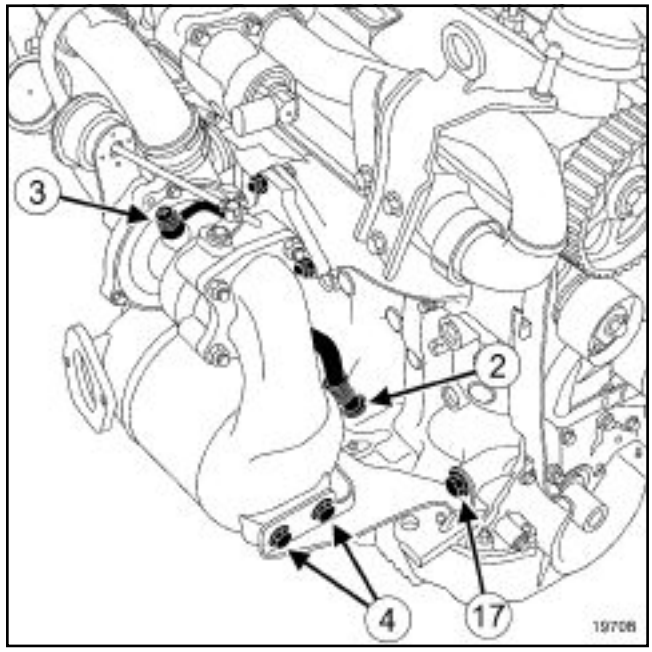

19708

Refit the turbocharger-catalytic converter assembly.

Fully insert the turbocharger oil return pipes on to the cylinder block at (**2**) .

Refit:

- the catalytic converter mounting stay,

- the catalytic converter stay mounting bolts.

Tighten to torque:

- **the turbocharger mounting nuts (26 ± 2.6 Nm)** ,

- **the catalytic converter stay mounting bolts on the engine (44 ± 4.4 Nm)** (**17**) ,

- **the catalytic converter stay mounting bolts on the catalytic converter (26 ± 2.6 Nm)** (**4**) ,

Put a little engine oil from an oil can in the oil circuit of the turbocharger.

K9K, and 260 or 270 or 272 or 700 or 702 or 704 or 706 or 710 or 712 or 722 or 724 or 728 or 729 or 750 or 752 or 760 or 762 or 790

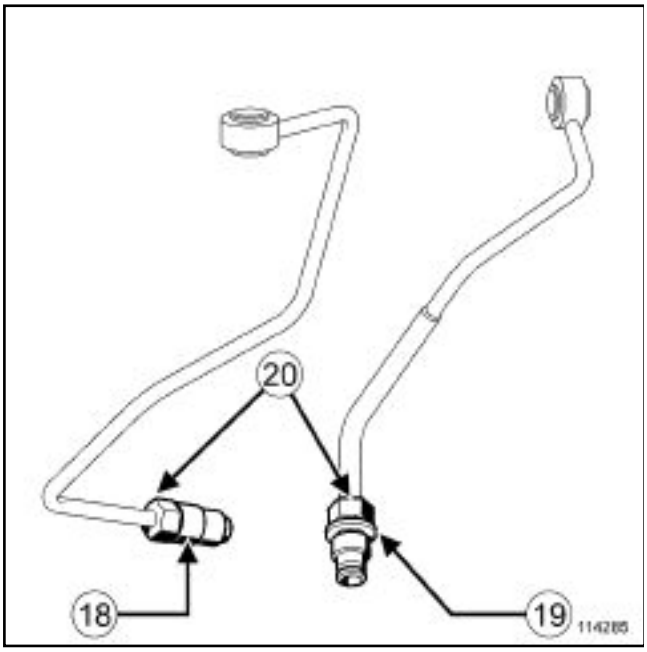

114285

Note:

These two turbocharger oil supply pipes may be used on the same engine. The tightening torque of the end pieces (**20**) on the cylinder head is different, depending on the following:

- if the end piece is **shouldered** (**19**) , in this case there will be no need to place the high-resistance bolt locking product on the end piece thread,
- if the end piece is **not shouldered** (**18**) , in this case it is essential to place the high-resistance bolt locking product on the end piece thread,

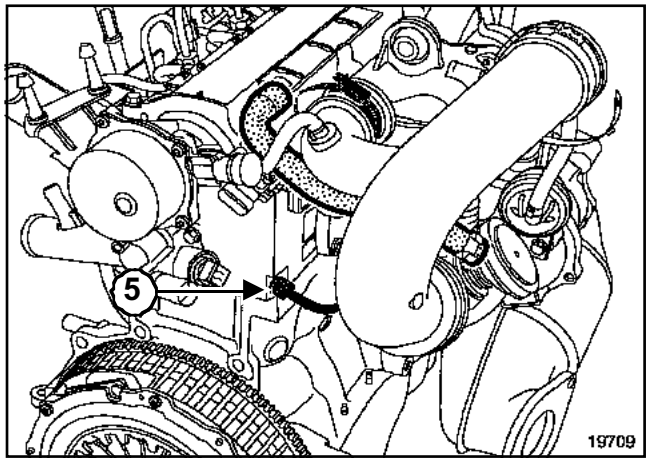

19709

Refit the turbocharger oil supply pipe.

Screw in place each mounting of the turbocharger oil supply pipe.

Tighten to torque:

- **the mounting bolt of the turbocharger oil supply pipe (turbocharger end) (23 ± 2.3 Nm)** at **(3)** ,
- **the turbocharger oil supply pipe mounting nut (cylinder head end) (collar nut 35 ± 3.5 Nm or no collar nut 23 ± 2.3 Nm)** at (**5**) .

Refit:

- the oil vapour rebreather pipe,
- the new turbocharger air ducts.

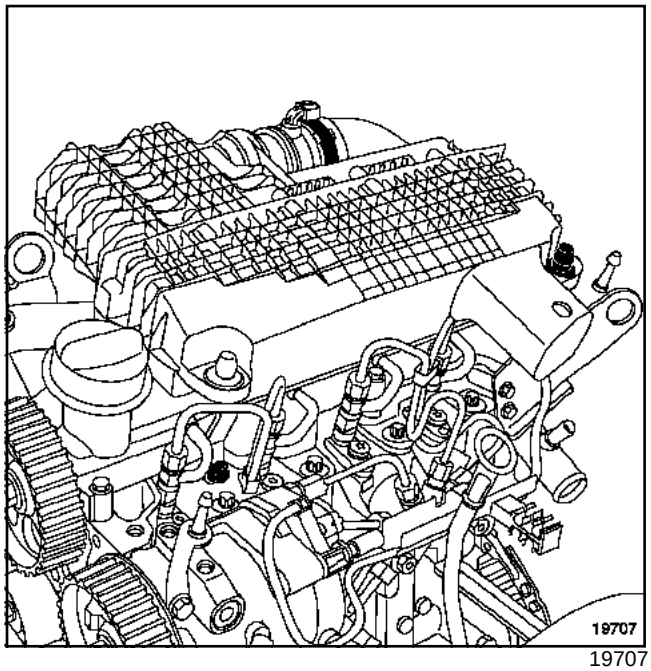

19707

Refit the air filter unit.

K9K, and 260 or 270 or 272 or 700 or 702 or 704 or 706 or 710 or 712 or 722 or 724 or 728 or 729 or 750 or 752 or 760 or 762 or 790

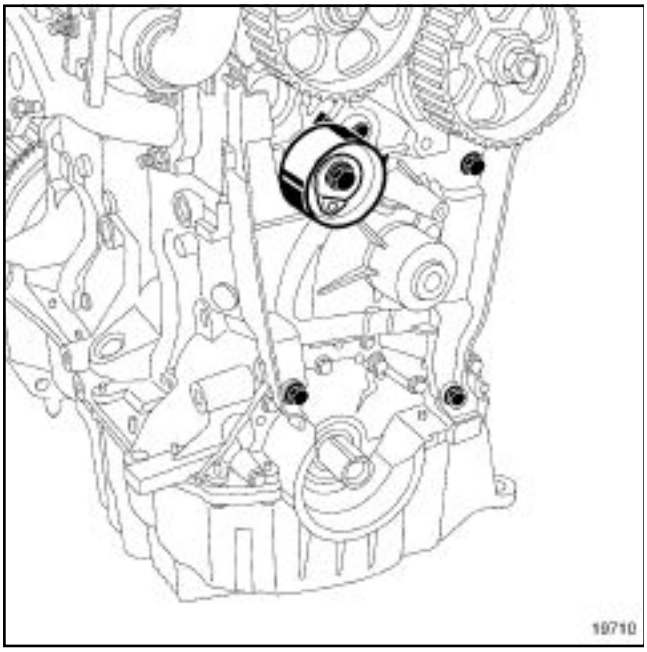

19710

Refit:

- the inner timing cover (moving the alternator if necessary),
- the inner timing cover mounting bolts.

Tighten to torque **the inner timing cover mounting bolts (9 ± 0.9 Nm)** .

V - RECOMMENDATIONS FOR THE REPAIR OF THE TIMING GEAR

IMPORTANT
Wear protective gloves during every operation.

WARNING
The belt must be replaced with a new one if it has been removed.

Never turn the engine in the opposite direction to its normal operating direction.

Do not run the engine without the accessories belt so as not to damage the crankshaft accessories pulley.

When replacing the belt, always replace the tensioning rollers and fixed rollers.

It is essential to remove the grease from the end of the crankshaft, the camshaft timing sprocket and the bearing face of the crankshaft accessories pulley. This is to avoid timing slippage.

VI - PARTS AND CONSUMABLES FOR THE REPAIR

Pièces à remplacer systématiquement pour la distribution

- Timing belt,
- Timing belt tensioning roller,
- Crankshaft accessories pulley bolt.

Ingrédients

- Silicone adhesive sealant, part no. **77 11 227 484**
- Degreasing agent, part no. **77 11 224 559** .

VII - EQUIPMENT REQUIRED FOR THE TIMING GEAR

- Protective gloves,
- Allen key (**6 mm**),
- Female torx socket (**14**),
- Offset spanner (**18 mm**),
- Torque/angle wrench,
- Torque wrench
- Cylinder head bolt tightening gauge (angular measuring type).

K9K, and 260 or 270 or 272 or 700 or 702 or 704 or 706 or 710 or 712 or 722 or 724 or 728 or 729 or 750 or 752 or 760 or 762 or 790

VIII - REFITTING THE TIMING BELT

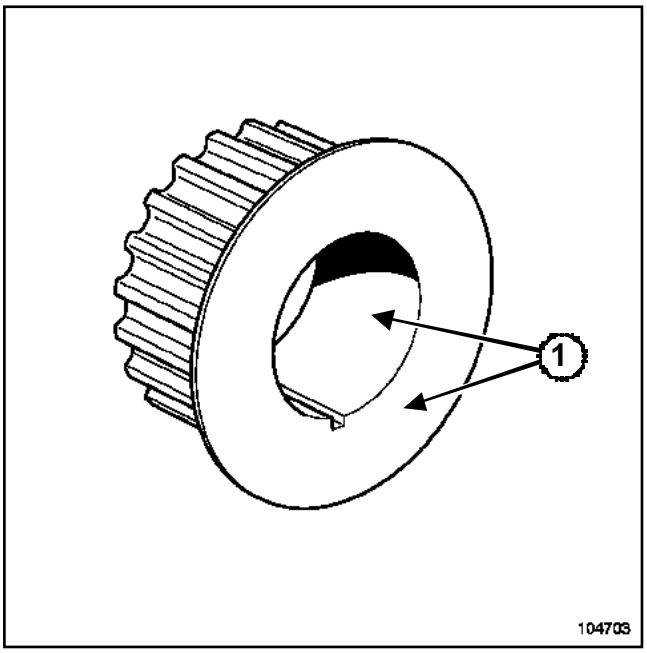

104703

Apply degreaser to:

- the end of the crankshaft (timing end),
- the timing sprocket bearing faces and bore at (**1**) ,
- the contact surfaces of the crankshaft accessories pulley.

K9K, and 260 or 270 or 272 or 700 or 702 or 704 or 706 or 710 or 712 or 722 or 724 or 728 or 729 or 750 or 752 or 760 or 762 or 790

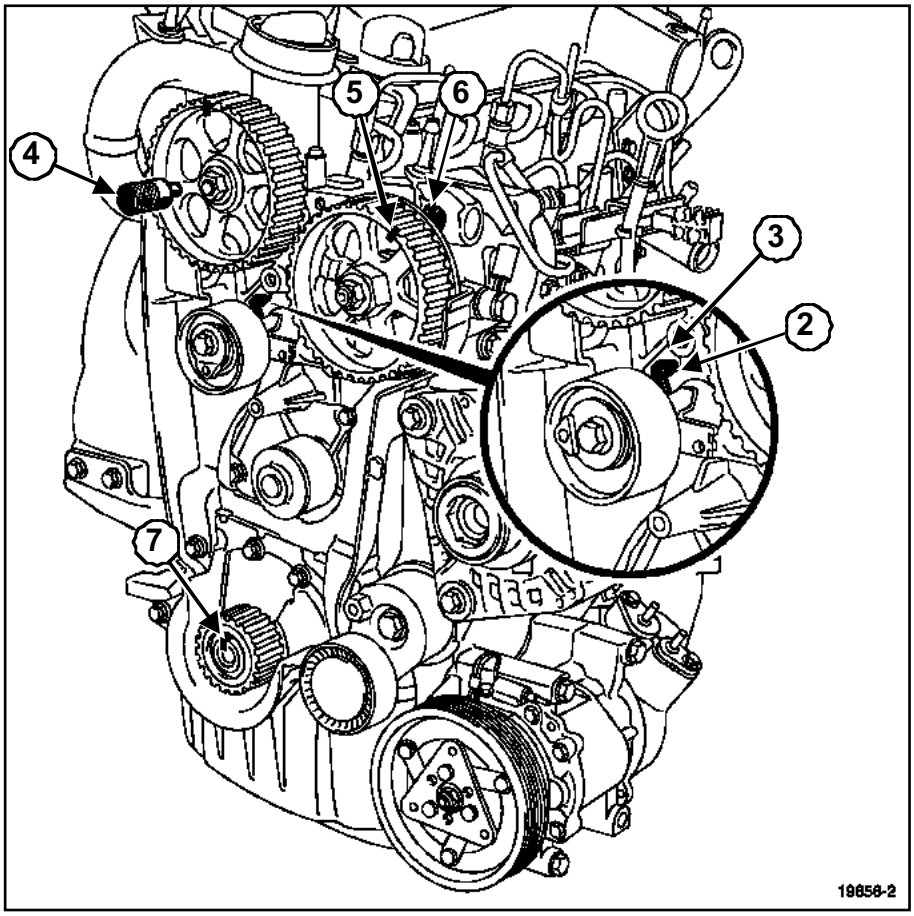

19656-2

Refit:

- the crankshaft timing sprocket,
- the timing tensioning roller.

Position the spigot (**2**) of the tensioning roller in the groove (**3**) of the cylinder head.

Insert pin **(Mot. 1430)** in the cylinder head and camshaft pulley holes at (**4**) . Turning the camshaft using an **18 mm** offset spanner, if necessary.

Check that high-pressure pump pulley marking (**5**) is opposite the bolt head (**6**) .

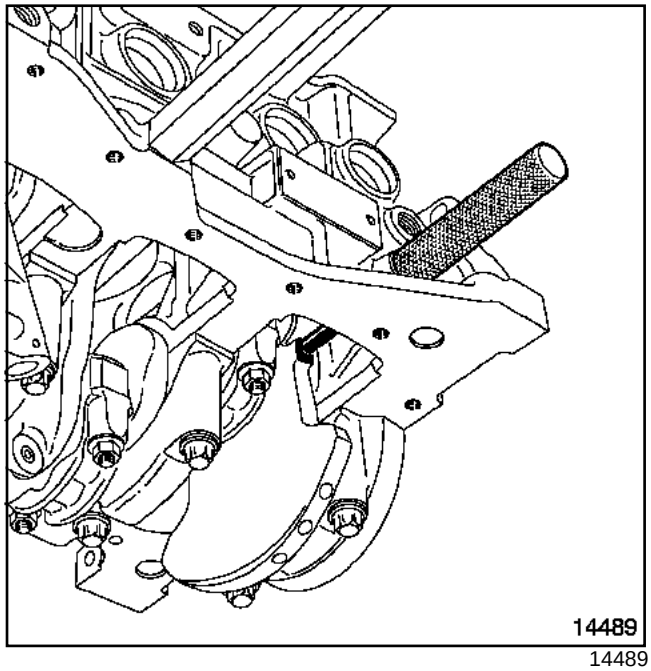

14489

Position the crankshaft so that is presses against the TDC setting pin **(Mot. 1489)** (crankshaft groove **(7)** must be at the top).

K9K, and 260 or 270 or 272 or 700 or 702 or 704 or 706 or 710 or 712 or 722 or 724 or 728 or 729 or 750 or 752 or 760 or 762 or 790

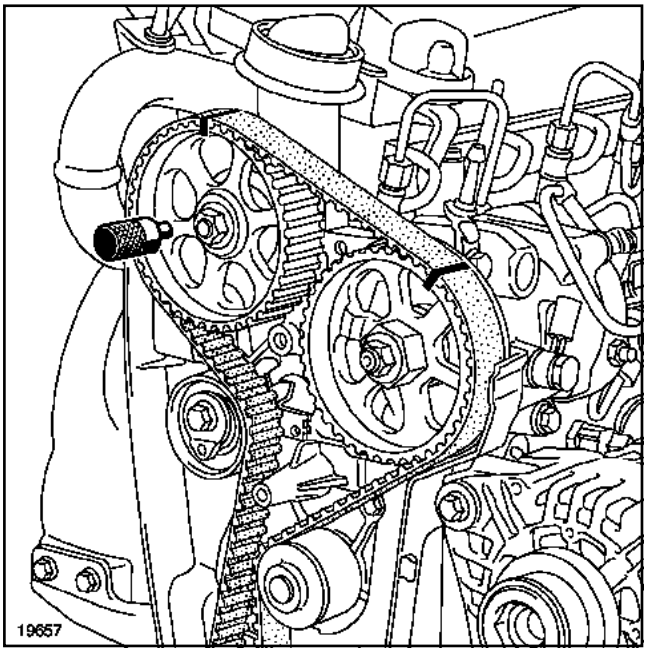

19657

Fit the timing belt, starting with the crankshaft sprocket, aligning the marks on the belt with those on the camshaft and high-pressure pump pulleys.

Note:

There must be 19 belt grooves between the marks of the high-pressure pump and camshaft pulleys.

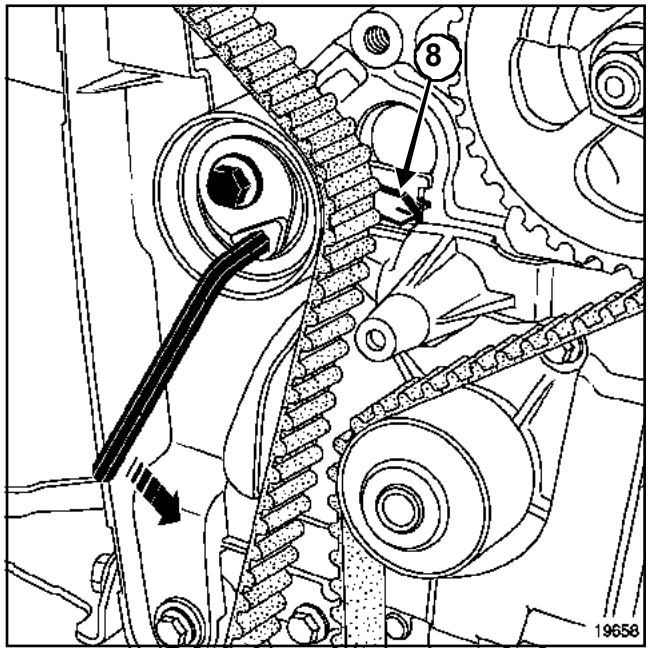

19658

Position the tensioning roller adjustable index marker (**8**) opposite the spigot, turning the eccentric cam anti-clockwise using a **6 mm** Allen key.

Torque tighten **the tensioning roller bolt (27 ± 2.7 Nm)** .

Refit the accessories crankshaft pulley with a new bolt.

Torque and angle tighten (crankshaft pressed against the TDC setting pin):

- **the crankshaft accessories pulley M12 mounting bolt (60 ± 6 Nm + 100° ± 10°)** ,
- **the crankshaft accessories pulley M14 mounting bolt (120 ± 12 Nm + 95° ± 15°)** ,

Remove the following tools:

- the camshaft pulley timing pin **(Mot. 1430)** ,
- the TDC setting pin **(Mot. 1489)** ,

K9K, and 260 or 270 or 272 or 700 or 702 or 704 or 706 or 710 or 712 or 722 or 724 or 728 or 729 or 750 or 752 or 760 or 762 or 790

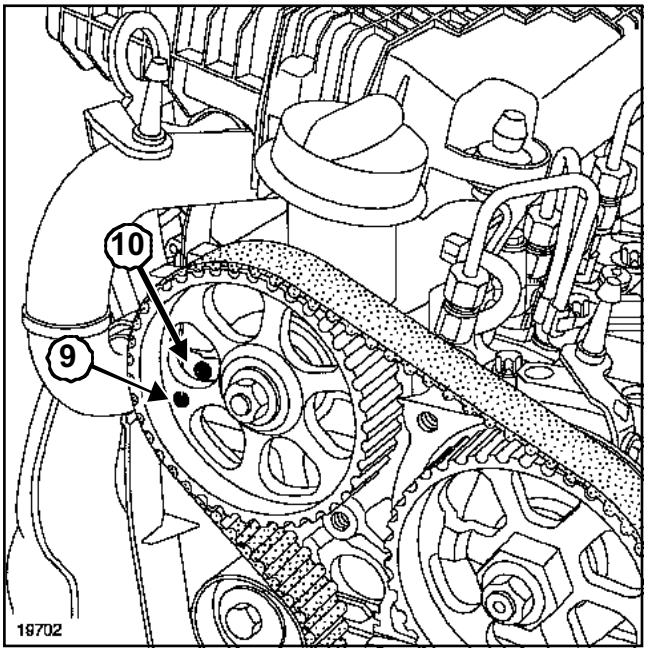

19702

Rotate the crankshaft twice in a clockwise direction (timing end) before the camshaft pulley hole (**9**) is opposite the cylinder head hole (**10**) .

Screw the TDC setting pin **(Mot. 1489)** into the cylinder block.

Bring the crankshaft slowly and smoothly against the TDC setting pin.

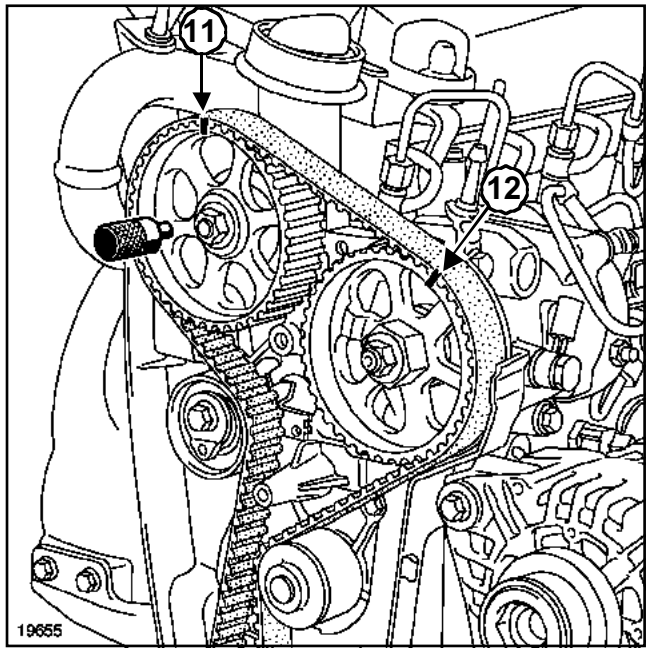

19655

Set the camshaft pulley using the **(Mot. 1430)** .

Note:

There must be **19 belt grooves** between the marks of the camshaft pulley (**11**) and the high-pressure pump pulley (**12**) .

Remove:

- the TDC setting pin **(Mot. 1489)** ,
- the Set of 5 timing pins for the camshaft and crankshaft pulleys **(Mot. 1430)** .

Note:

After two turns, the tensioning roller index markers may be in two different positions.

The rotation of the tensioning roller eccentric depends on the position.

K9K, and 260 or 270 or 272 or 700 or 702 or 704 or 706 or 710 or 712 or 722 or 724 or 728 or 729 or 750 or 752 or 760 or 762 or 790

First position

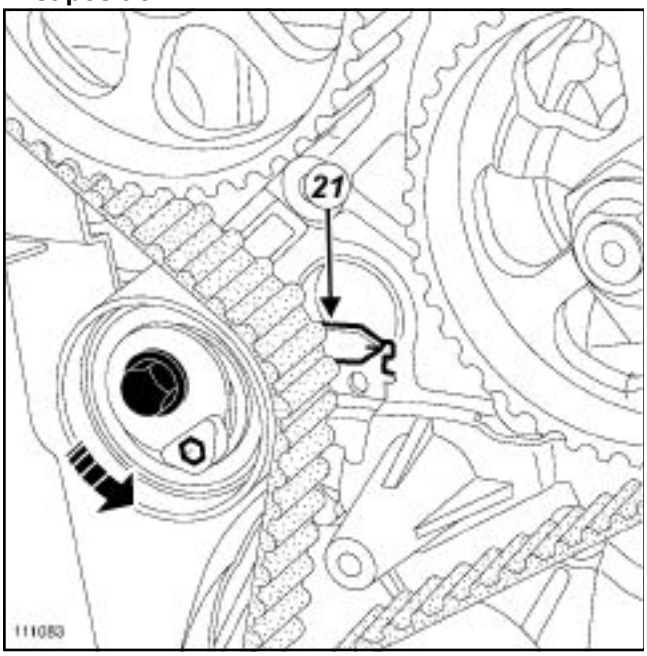

111083

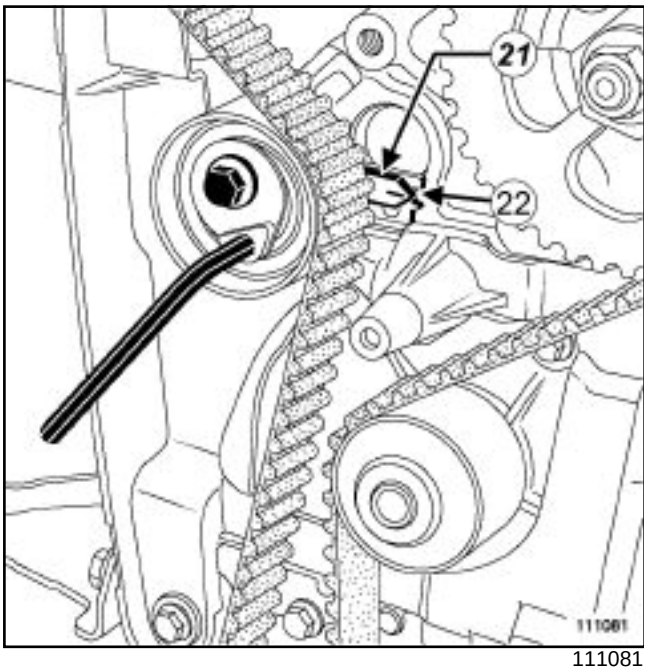

111081

Loosen the tensioning roller bolt by no more than one turn, holding it with a **6 mm** Allen key.

Gradually align the adjustable index marker (**21**) to the middle of the timing window, (**22**) turning the key anti-clockwise.

Second position

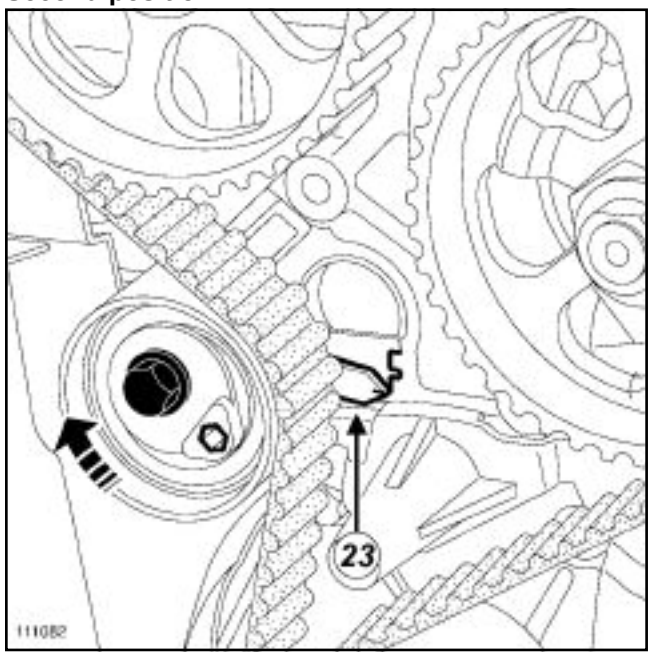

111082

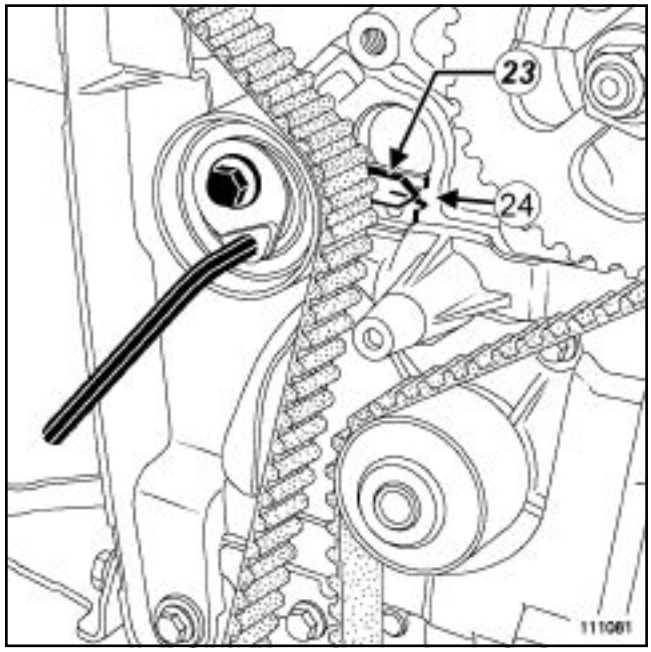

111081

Loosen the tensioning roller bolt by no more than one turn, holding it with a **6 mm** Allen key.

Gradually align the adjustable index marker (**23**) to the middle of the timing window, (**24**) turning the key clockwise.

Torque tighten **the tensioning roller bolt (27 ± 2.7 Nm)** .

Rotate the crankshaft clockwise through two revolutions (timing end), before the camshaft pulley hole is opposite the cylinder head hole.

K9K, and 260 or 270 or 272 or 700 or 702 or 704 or 706 or 710 or 712 or 722 or 724 or 728 or 729 or 750 or 752 or 760 or 762 or 790

Screw the TDC setting pin **(Mot. 1489)** into the cylinder block.

Bring the crankshaft slowly and smoothly against the TDC setting pin.

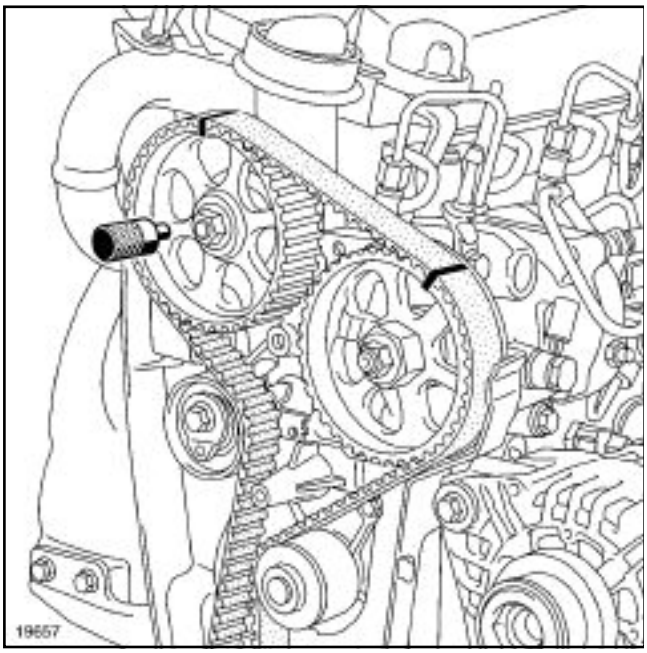

19657

Set the camshaft pulley using the **(Mot. 1430)** .

If this is not possible, repeat the timing belt refitting operation.

Remove the following tools:

- TDC setting pin **(Mot. 1489)** ,
- set of 5 timing pins for the camshaft and crankshaft pulleys **(Mot. 1430)** .

Place a drop of **ADHESIVE SILICONE SEALANT** on the threading of the TDC pin plug.

Tighten to torque **the TDC pin plug cap (20 ± 2 Nm)** .

Timing - cylinder head: Refitting

K9K, and 260 or 270 or 272 or 700 or 702 or 704 or 706 or 710 or 712 or 722 or 724 or 728 or 729 or 750 or 752 or 760 or 762 or 790

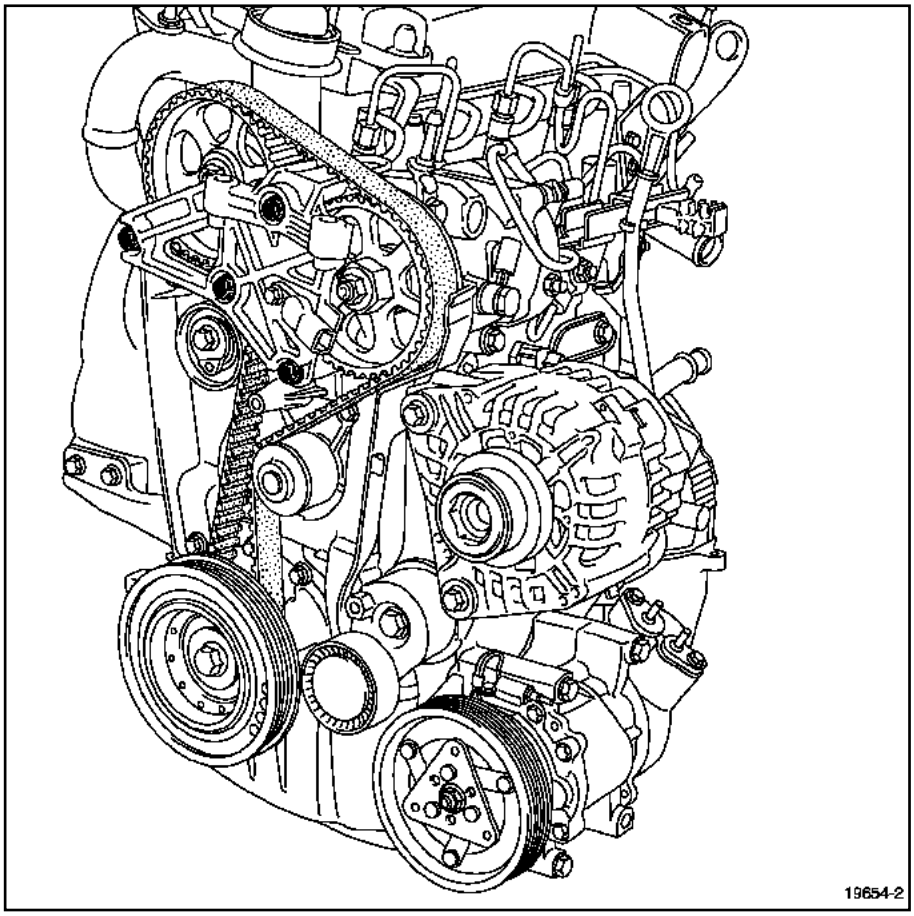

19654-2

Refit the cylinder head suspended mounting.

Tighten to torque **the cylinder head suspended mounting bolts (21 ± 2.1 Nm)** .

K9K, and 260 or 270 or 272 or 700 or 702 or 704 or 706 or 710 or 712 or 722 or 724 or 728 or 729 or 750 or 752 or 760 or 762 or 790

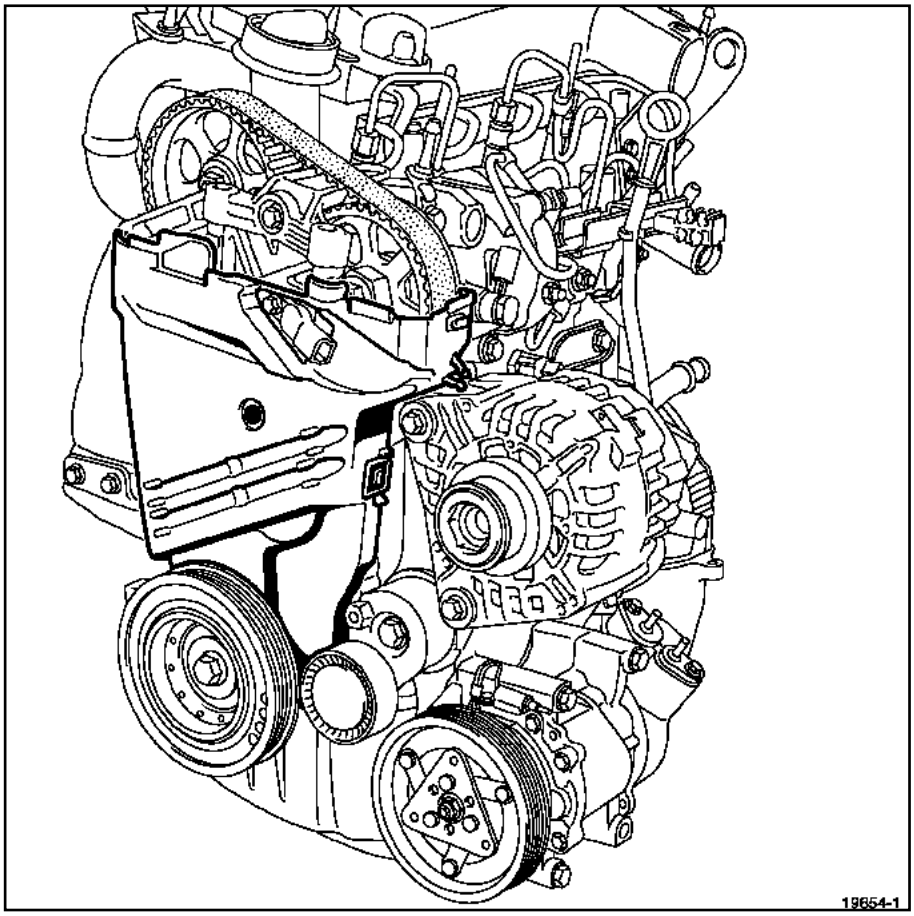

19654-1

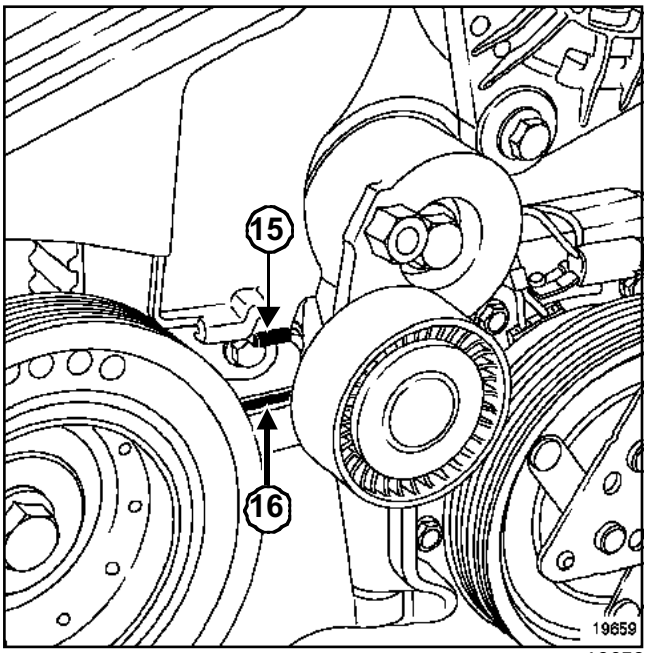

19659

Refit the timing cover, positioning tab (**15**) in lower timing cover opening. (**16**) .

K9K, and 260 or 270 or 272 or 700 or 702 or 704 or 706 or 710 or 712 or 722 or 724 or 728 or 729 or 750 or 752 or 760 or 762 or 790

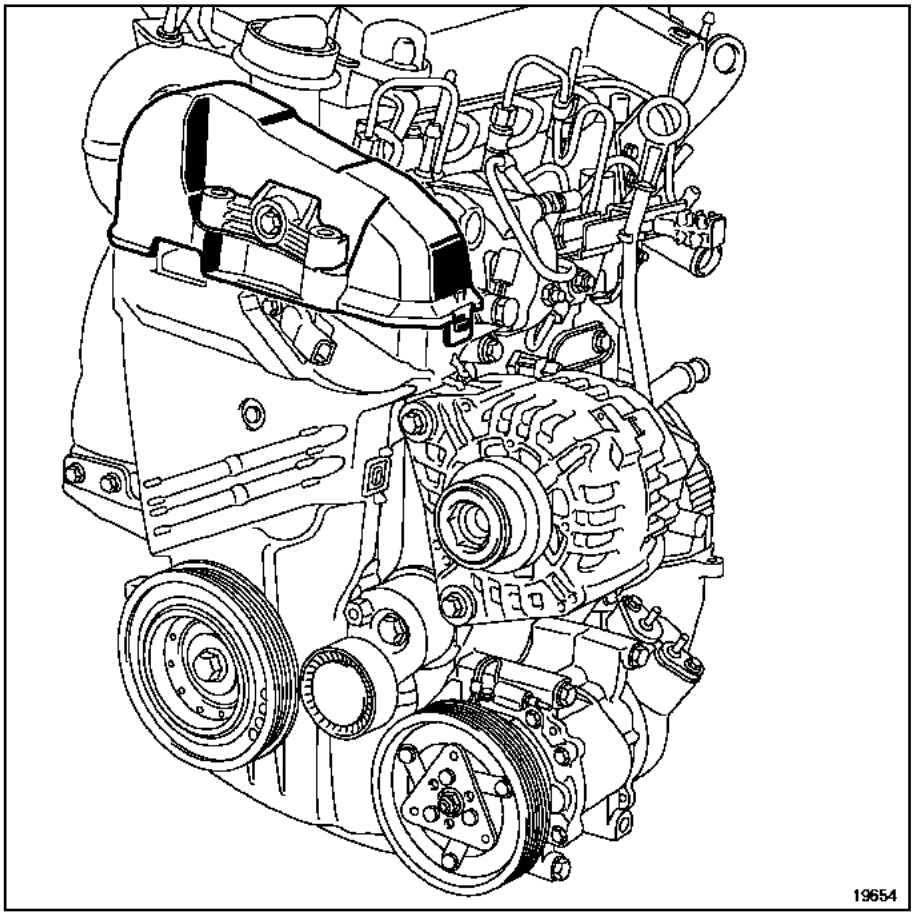

19654

Refit the high-pressure pump position sensor.

Tighten to torque **the high-pressure pump position sensor bolt (8 ± 0.8 Nm)** .

Refit the upper timing cover.

K9K, and 732 or 764

Special tooling required	
Mot. 1430	Set of 5 crankshaft and camshaft pulley timing pins.
Mot. 1489	TDC locating pin.

Tightening torques ▽	
cylinder head mounting bolts	**25 ± 2.5 Nm**
cylinder head mounting bolts	**255° ± 10°**
rocker cover mounting bolts	**12 ± 1.2 Nm**
dipstick guide mounting nuts	**10 ± 1 Nm**
damper valve mounting nuts	**12 ± 1.2 Nm**
turbocharger oil return pipe mounting bolts	**12 ± 1.2 Nm**
the nuts mounting the catalytic converter on the turbocharger	**26 ± 2.6 Nm**
the bolts mounting the catalytic converter stay on the engine	**44 ± 4.4 Nm**
the bolts mounting the catalytic converter stay on the catalytic converter	**26 ± 2.6 Nm**
inner timing cover mounting bolts	**9 ± 0.9 Nm**
tensioning roller bolt	**27 ± 2.7 Nm**
the camshaft pulley wheel bolts	**14 ± 1.4 Nm**
the tensioning roller bolt	**27 ± 2.7 Nm**
the camshaft pulley wheel bolts	**14± 1.4 Nm**
the crankshaft accessories pulley M14 bolt	**120 ± 12 Nm + 95° ± 15°**

Tightening torques ▽	
TDC pin plug	**20 ± 2 Nm**
cylinder head suspended mounting bolts	**21 ± 2.1 Nm**
cylinder head suspended mounting bolts	**21 ± 2.1 Nm**

I - RECOMMENDATIONS FOR REPAIRING THE CYLINDER HEAD

IMPORTANT
Wear protective gloves during every operation.

WARNING
When handling the cylinder head gasket, use the cylinder barrel to hold it.

The sealing surfaces must be clean, dry and free from grease (avoid finger marks).

Applying excess sealant could cause it to be squeezed out when parts are tightened. A mixture of sealant and fluid could damage certain components (engine, radiator, etc.)

To obtain correct tightening of the cylinder head bolts, remove any oil from the cylinder head mounting holes using a syringe.

Do not retighten the cylinder head bolts after applying this procedure.

Do not lubricate the new cylinder head bolts.

II - PARTS AND CONSUMABLES FOR THE REPAIR

Parts always to be replaced for the cylinder head

- The cylinder head gasket,
- The cylinder head bolts,
- The rocker cover gasket,
- The damper valve seal,
- The seals on the turbocharger oil return pipe,
- The catalytic converter seal.

Consumables

- Degreaser, part no. **77 11 224 559** ,
- Silicone adhesive sealant, part no. **77 11 227 484** .

K9K, and 732 or 764

III - EQUIPMENT REQUIRED FOR THE CYLINDER HEAD

- Torque/angle wrench,
- Torque wrench
- Cylinder head bolt tightening gauge (angular measuring type),
- Female torx socket (**14**),
- Protective gloves.

IV - REFITTING OF THE CYLINDER HEAD

Position the pistons at mid-stroke.

Apply degreaser to the:

- the combustion side of the cylinder head,
- the combustion face of the cylinder block.

Check for the cylinder head centring dowels on the cylinder block.

Refit the cylinder head gasket (positioning the TOP facing upwards) onto the cylinder block.

Remove the cylinder head from the cylinder head support.

Refit:

- the cylinder head,
- the new cylinder head mounting bolts.

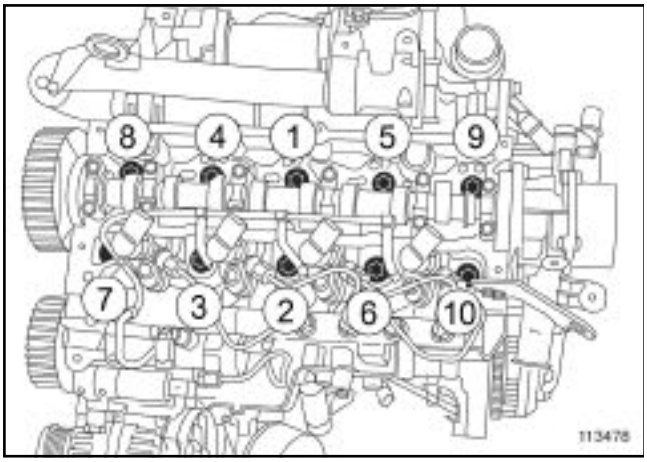

113478

Tighten to torque and in order the **cylinder head mounting bolts (25 ± 2.5 Nm)** .

Check that all the **cylinder head mounting bolts** are tightened to **(25 ± 2.5 Nm)** .

Angle tighten in order the **cylinder head mounting bolts (255° ± 10°)** .

Degrease the rocker cover sealing surface on the cylinder head.

Fit a new seal onto the rocker cover.

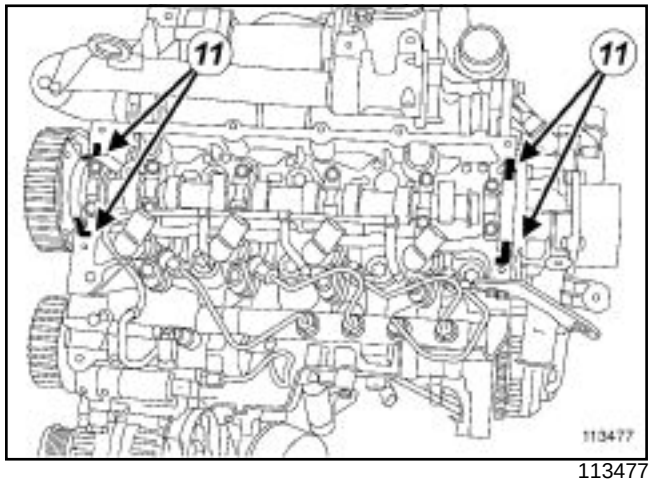

113477

Apply four beads (**11**) of **SILICONE ADHESIVE SEALANT** (**2 mm** in diameter).

Refit:

- the rocker cover,
- the rocker cover mounting bolts.

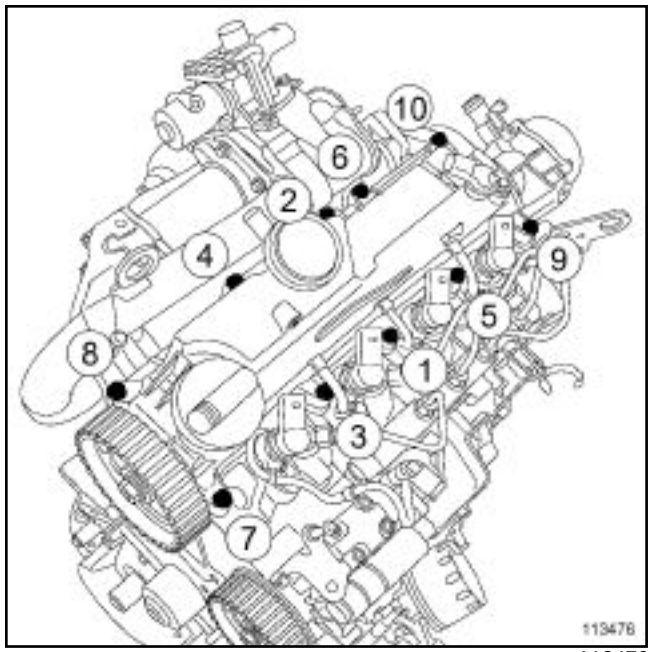

113476

Tighten to torque and in order the **rocker cover mounting bolts (12 ± 1.2 Nm)** .

K9K, and 732 or 764

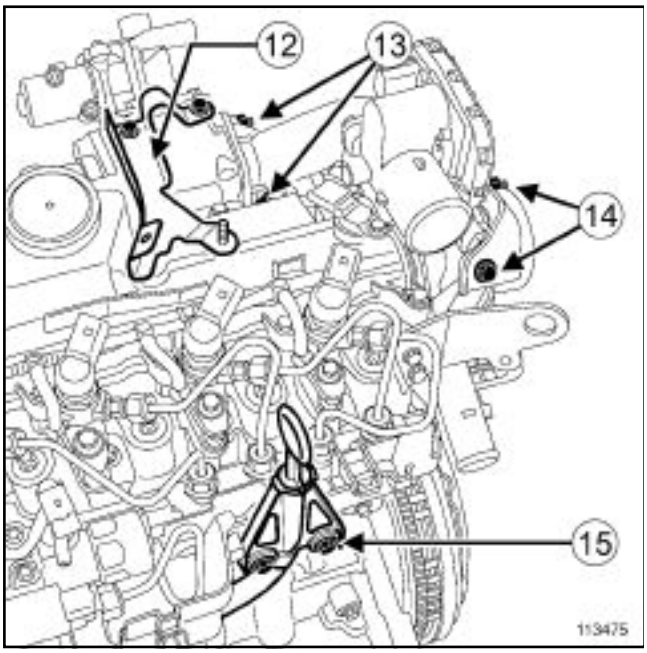

113475

Refit:

- the dipstick guide,
- the dipstick guide mounting nuts (**15**) .

Tighten to torque the **dipstick guide mounting nuts (10 ± 1 Nm)** .

Refit a new seal to the damper valve.

Refit:

- the damper valve,
- the damper valve mounting nuts (**13**) .

Tighten to torque the **damper valve mounting nuts (12 ± 1.2 Nm)** .

Refit:

- the damper valve mounting bracket,
- the mounting bolts securing the damper valve mounting bracket,
- the exhaust gas recirculation valve retaining bracket,
- the exhaust gas recirculation valve retaining bracket mounting bolts.

Fit the new seals onto the turbocharger oil return pipe.

Use engine oil to lubricate the turbocharger oil return pipe O-ring seals.

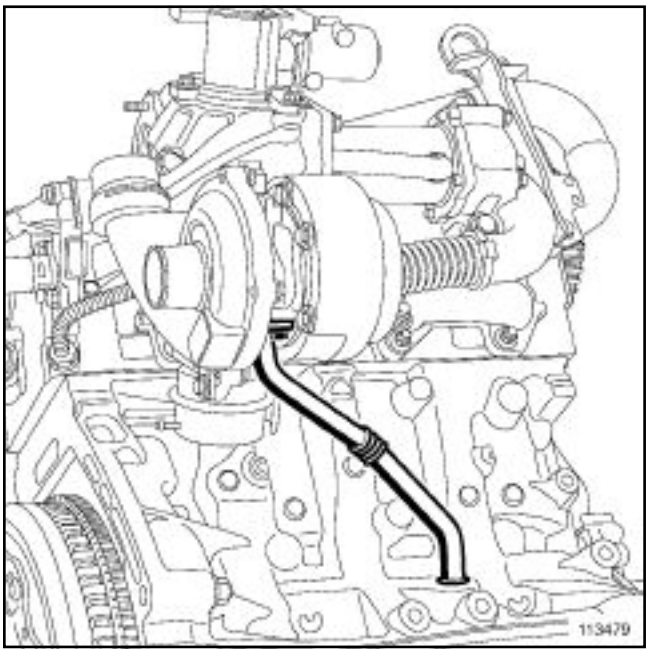

113479

Refit:

- the turbocharger oil return pipe,
- the turbocharger oil return pipe mounting bolts.

Tighten to torque the **turbocharger oil return pipe mounting bolts (12 ± 1.2 Nm)** .

Fit a new seal between the turbocharger and the catalytic converter.

K9K, and 732 or 764

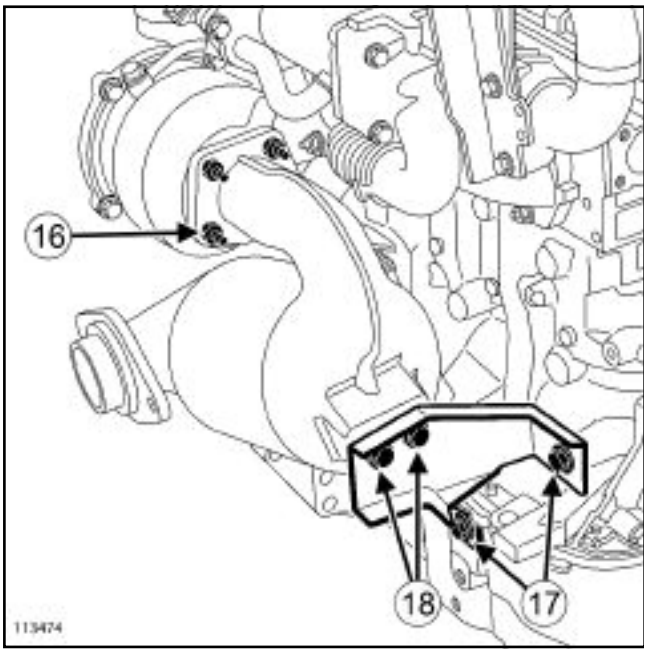

113474

Refit:

- the catalytic converter,
- the nuts mounting the catalytic converter on the turbocharger,
- the catalytic converter mounting stay,
- the catalytic converter stay mounting bolts.

Tighten to torque:

- **the nuts mounting the catalytic converter on the turbocharger (26 ± 2.6 Nm)** (**16**) ,
- **the bolts mounting the catalytic converter stay on the engine (44 ± 4.4 Nm)** (**17**) ,
- **the bolts mounting the catalytic converter stay on the catalytic converter (26 ± 2.6 Nm)** (**18**) .

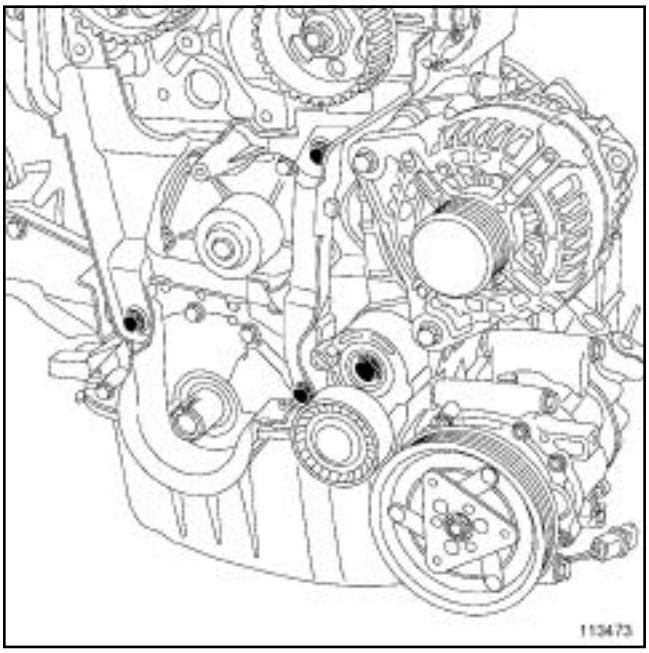

113473

Refit:

- the inner timing cover (tilting the alternator if necessary),
- the inner timing cover mounting bolts.

Tighten to torque the **inner timing cover mounting bolts (9 ± 0.9 Nm)** .

V - RECOMMENDATIONS FOR REPAIRING THE TIMING

IMPORTANT

Wear protective gloves during every operation.

WARNING

The belt must be replaced with a new one if it has been removed.

Never turn the engine in the opposite direction to its normal operating direction.

Do not run the engine without the accessories belt so as not to damage the crankshaft accessories pulley.

When replacing the belt, always replace the tensioning rollers and fixed rollers.

VI - PARTS AND CONSUMABLES

Parts always to be replaced for the timing

- Timing belt,

K9K, and 732 or 764

- Timing belt tensioning roller,
- Crankshaft accessories pulley bolt.

Consumables

- Silicone adhesive sealant, part no. **77 11 227 484**

VII - EQUIPMENT REQUIRED FOR THE TIMING BELT

- Protective gloves,
- Allen key (**6 mm**),
- Female torx socket (**14**),
- Offset wrench (**18 mm**),
- Torque/angle wrench,
- Torque wrench
- Cylinder head bolt tightening gauge (angular measuring type).

VIII - REFITTING THE TIMING BELT

Refit the crankshaft timing sprocket.

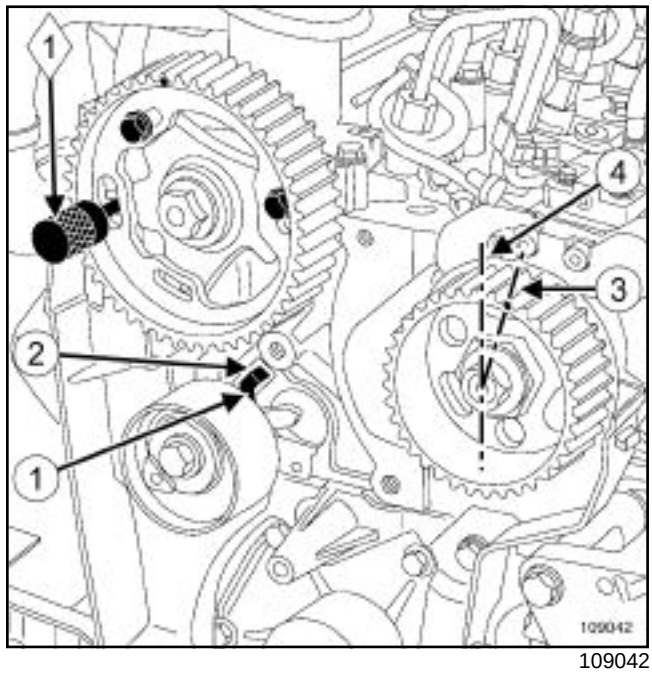

109042

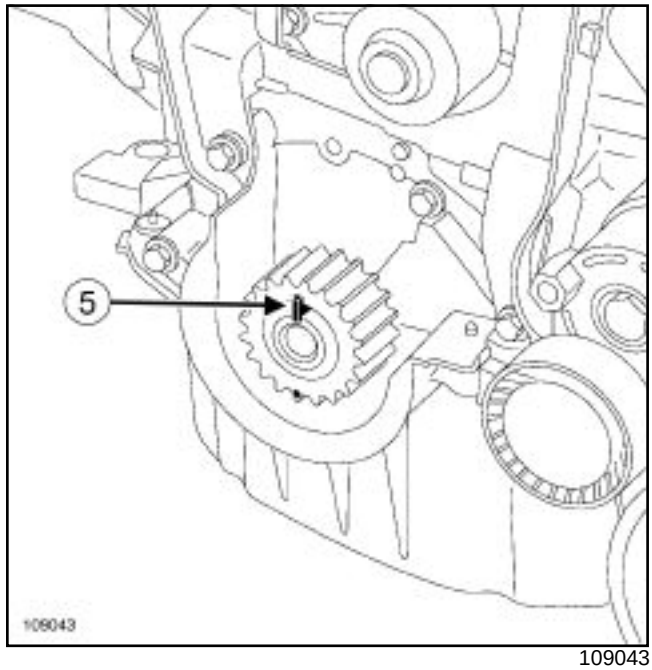

109043

Refit the timing tensioning roller.

Put the tensioning roller spigot (**1**) in the cylinder head groove (**2**) .

Engage the pin (**1**) **(Mot. 1430)** in the holes of the camshaft pulley and cylinder head, turning the camshaft using an **18 mm** offset wrench if necessary.

Check that the high-pressure pump mark (**3**) has shifted one tooth to the right of the vertical axle (**4**) .

K9K, and 732 or 764

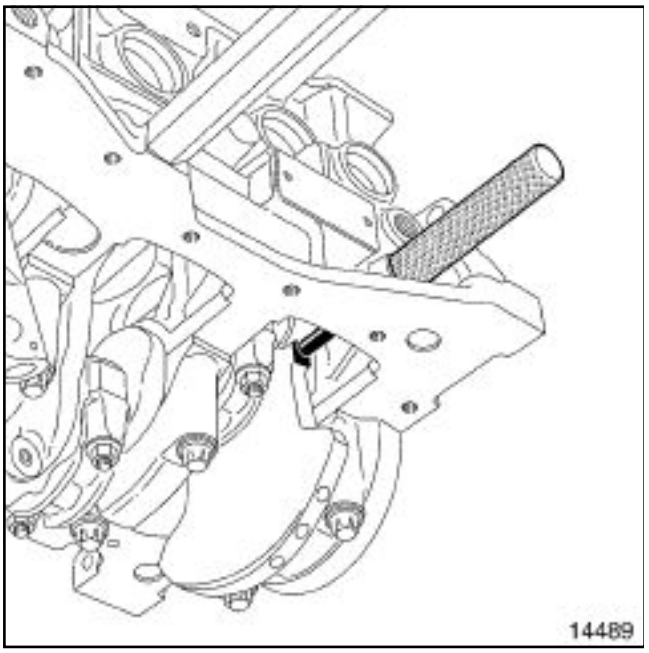

14489

Position the crankshaft so that it presses on the TDC setting pin **(Mot. 1489)** (the crankshaft timing sprocket cotter ***(5)*** must face upwards)

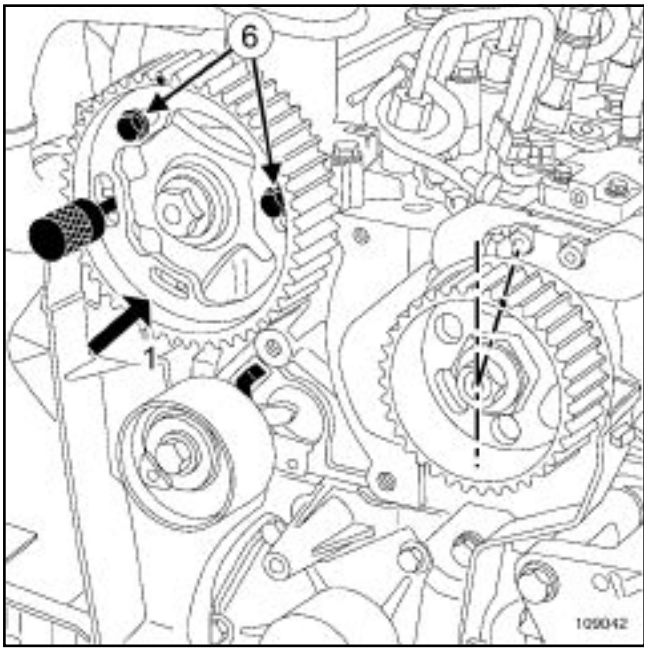

109042

Remove one bolt from the camshaft pulley wheel.

Loosen the two other camshaft pulley wheel bolts (**6**) by one turn.

K9K, and 732 or 764

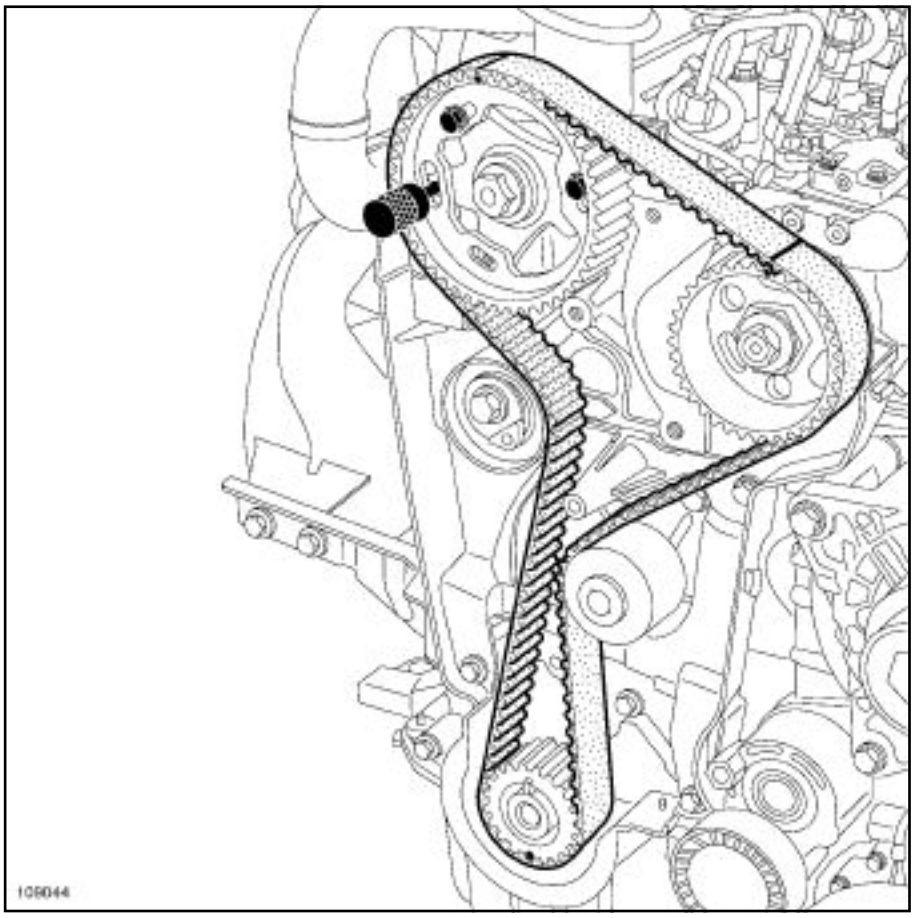

109044

Fit the timing belt, starting with the crankshaft sprocket, by aligning the marks on the belt with those on the crankshaft sprockets, the camshaft and the high-pressure pump.

note:

There should be 19 tooth belt grooves on the belt between the camshaft sprocket marks and the high-pressure pump, and 51 tooth belt grooves between the crankshaft sprockets and the high-pressure pump.

K9K, and 732 or 764

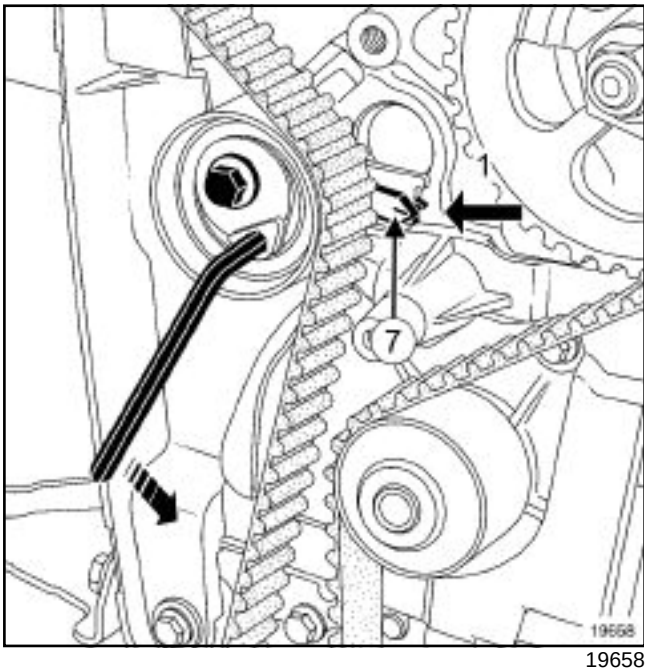

19658

Position the tensioning roller adjustable index (**7**) opposite the spigot, turning the eccentric cam anti-clockwise using a **6 mm** Allen key.

Tighten to torque the **tensioning roller bolt (27 ± 2.7 Nm)** .

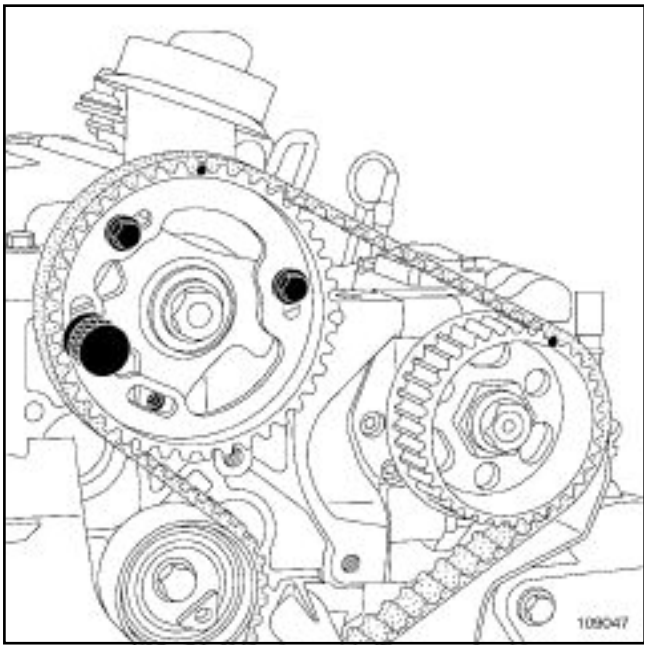

109047

Check that the camshaft pulley hub bolts are not fully up against the camshaft pulley wheel.

K9K, and 732 or 764

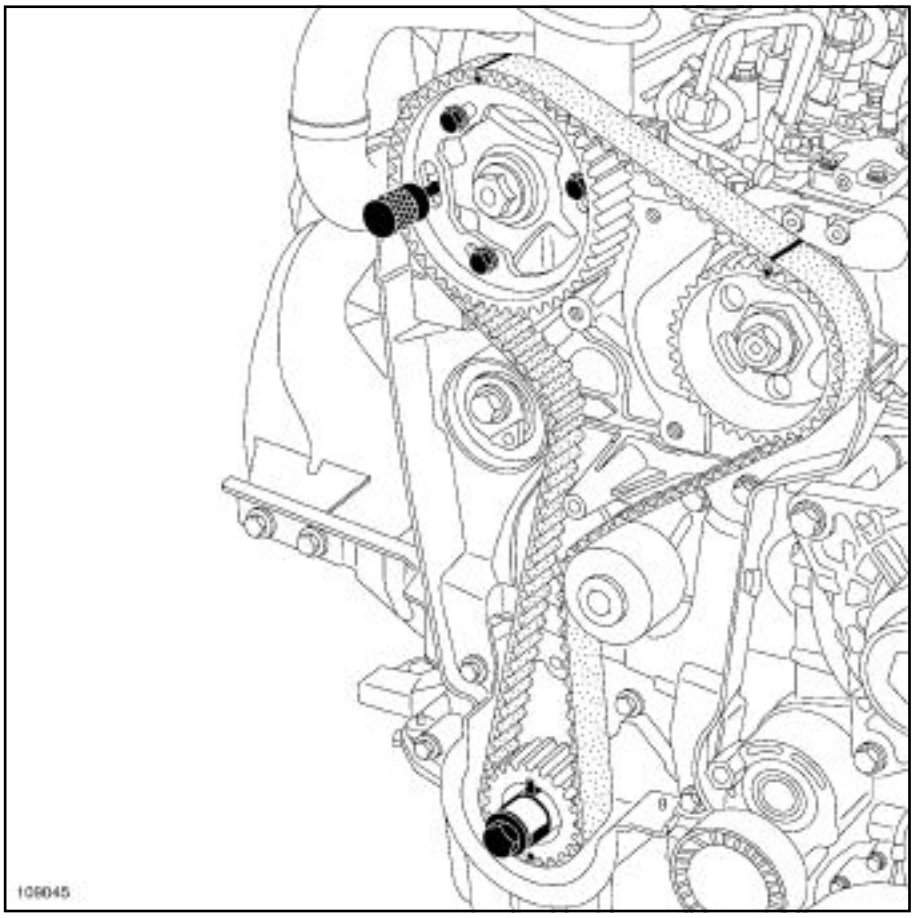

109045

Refit the bolt to the camshaft pulley wheel.

Tighten to torque **the camshaft pulley wheel bolts (14 ± 1.4 Nm)** .

Remove:

- the TDC setting pin **(Mot. 1489)** ,
- the set of 5 timing pins for the camshaft and crankshaft pulleys **(Mot. 1430)** .

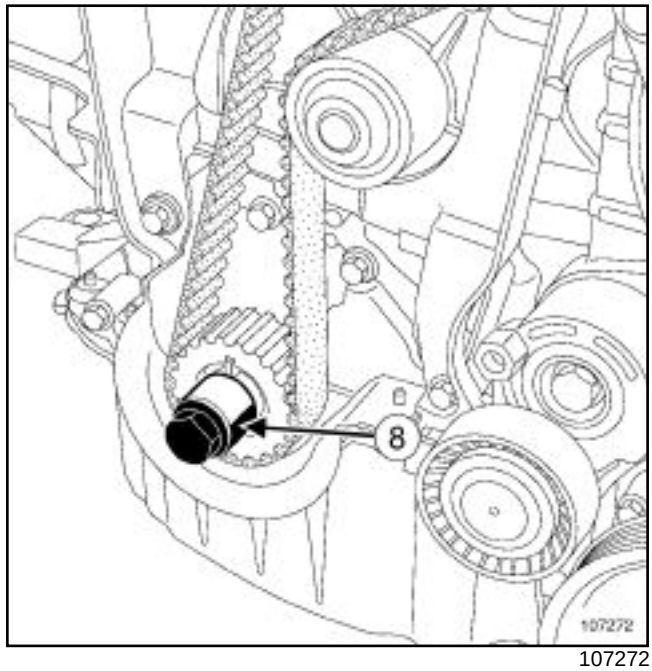

107272

Tighten the old crankshaft accessories pulley bolt fitted with a spacer (which does not cover the timing sprocket mark) (**8**) onto the crankshaft.

K9K, and 732 or 764

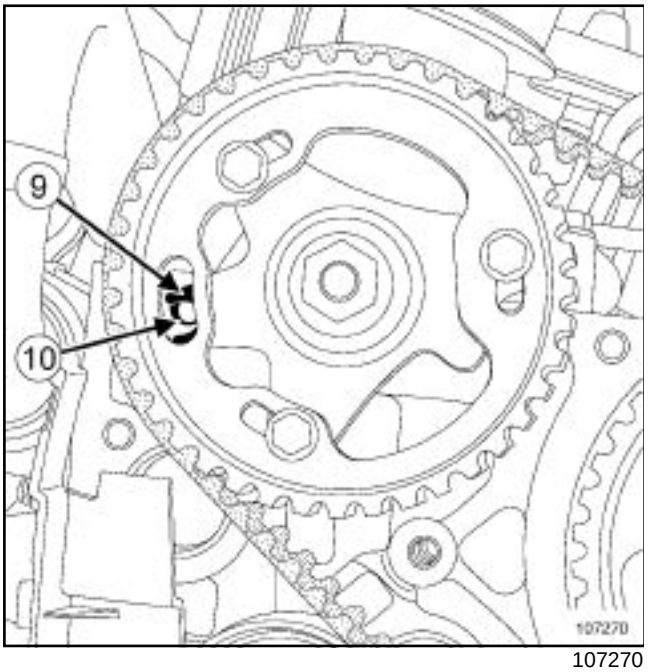

107270

Rotate the crankshaft clockwise through two revolutions (timing end), before the camshaft pulley hole (**9**) is opposite the cylinder head hole (**10**) .

Screw the TDC setting pin **(Mot. 1489)** into the cylinder block.

Bring the crankshaft slowly and smoothly against the TDC setting pin.

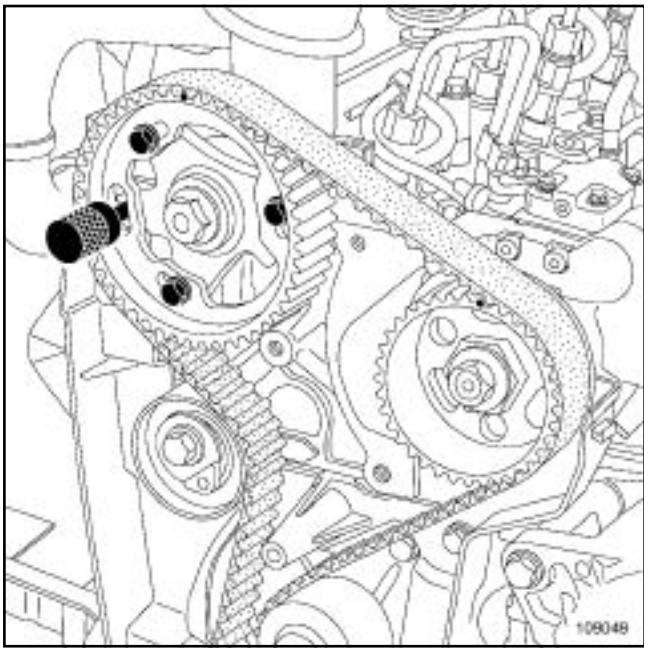

109049

Set the camshaft pulley using the **(Mot. 1430)** .

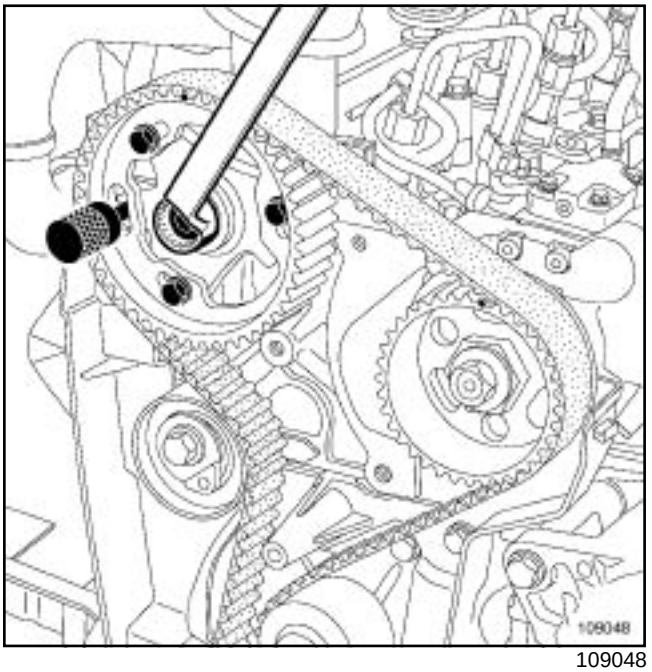

109048

If the pin **(Mot. 1430)** does not engage:

loosen the camshaft pulley wheel bolts by one turn,

Turn the camshaft pulley hub using an **18 mm** offset wrench to set the camshaft pulley hub timing.

Do not retighten the camshaft pulley wheel bolts.

K9K, and 732 or 764

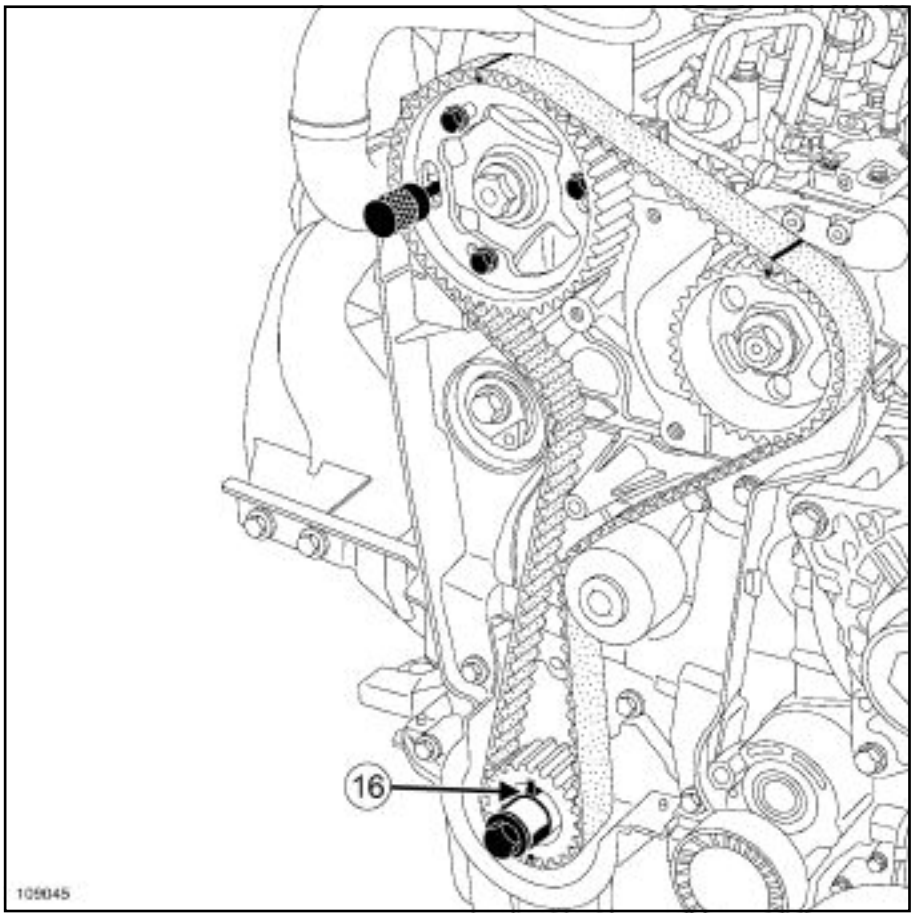

109045

Check that the crankshaft timing sprocket cotter (**16**) is positioned vertically at the top.

note:

After two turns, the tensioning roller index markers may be in two different positions.

The rotation of the tensioning roller eccentric depends on the position.

K9K, and 732 or 764

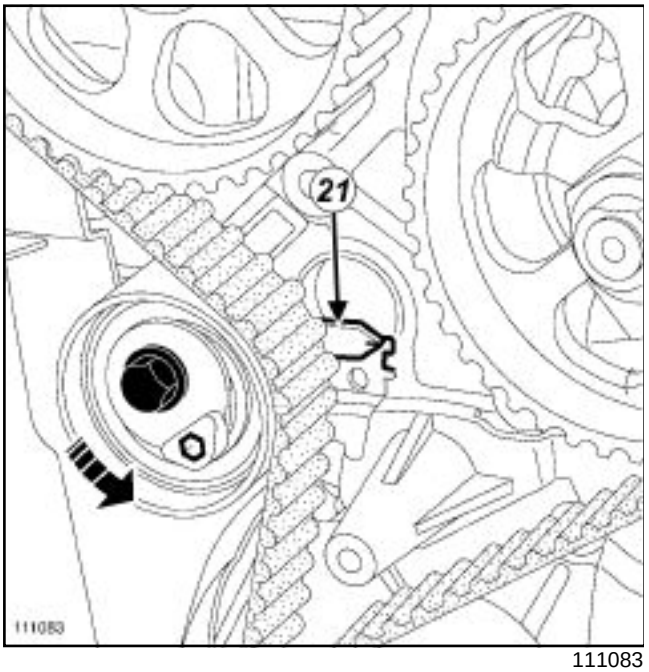

111083

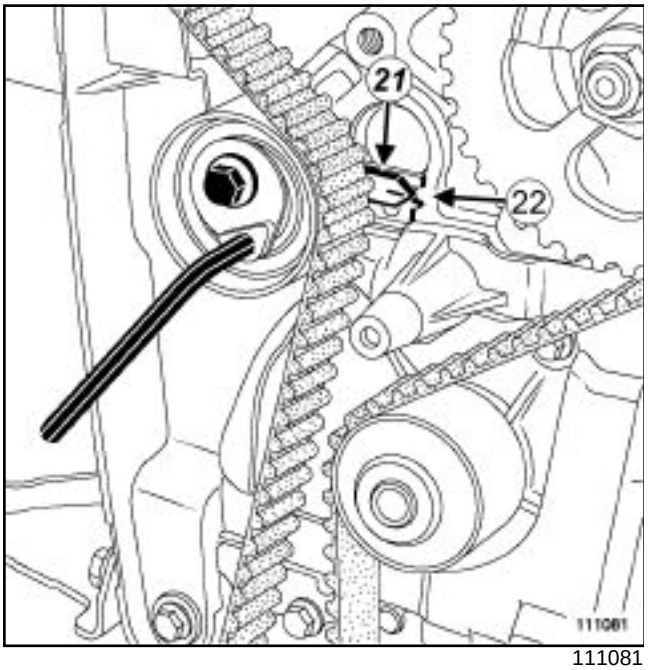

111081

Loosen the tensioning roller bolt by no more than one turn, holding it with a **6 mm** Allen key.

Gradually align the adjustable index (**21**) in the middle of the timing window (**22**) , turning the key anti-clockwise.

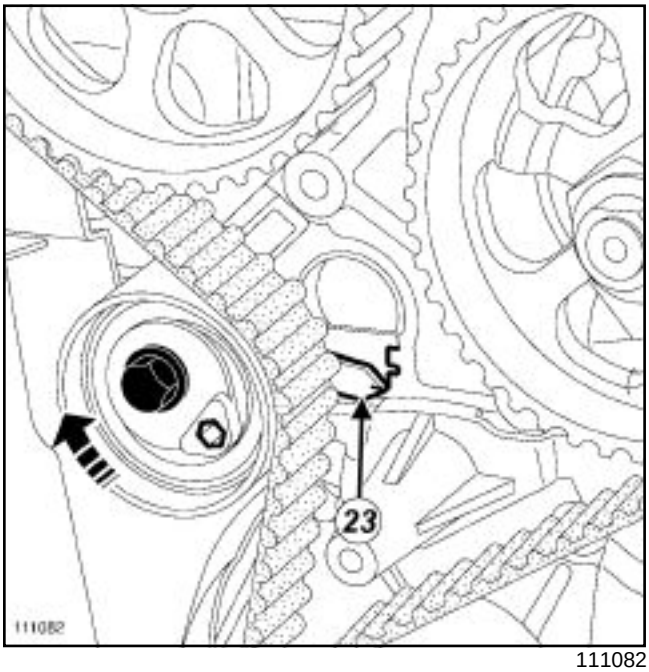

111082

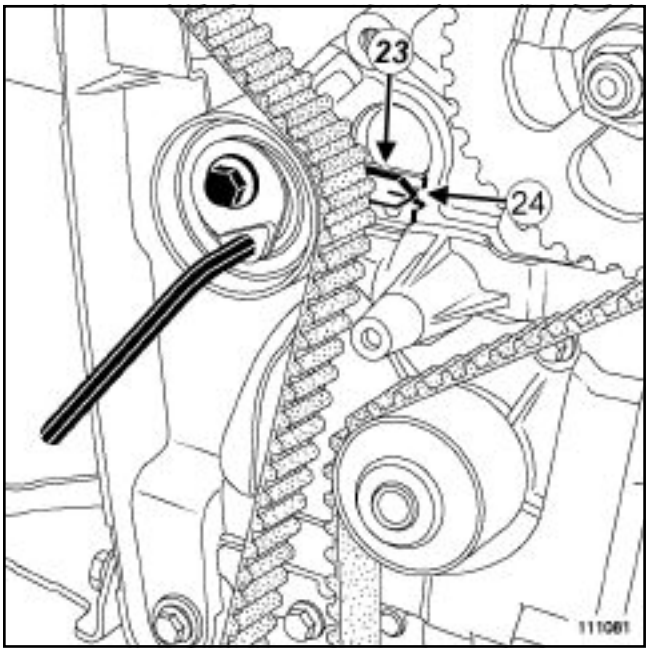

111081

Loosen the tensioning roller bolt by no more than one turn, holding it with a **6 mm** Allen key.

Gradually align the adjustable index (**23**) in the middle of the timing window (**24**) , turning the key clockwise.

Tighten to torque:

- **the tensioning roller bolt (27 ± 2.7 Nm)** ,
- **the camshaft pulley wheel bolts (14± 1.4 Nm)** .

Remove the following tools:

- TDC setting pin **(Mot. 1489)** ,

K9K, and 732 or 764

- the set of 5 timing pins for the camshaft and crankshaft pulleys **(Mot. 1430)** .

Rotate the crankshaft clockwise through two revolutions (timing end), before the camshaft pulley hole is opposite the cylinder head hole.

Screw the TDC setting pin **(Mot. 1489)** into the cylinder block.

Bring the crankshaft slowly and smoothly against the TDC setting pin.

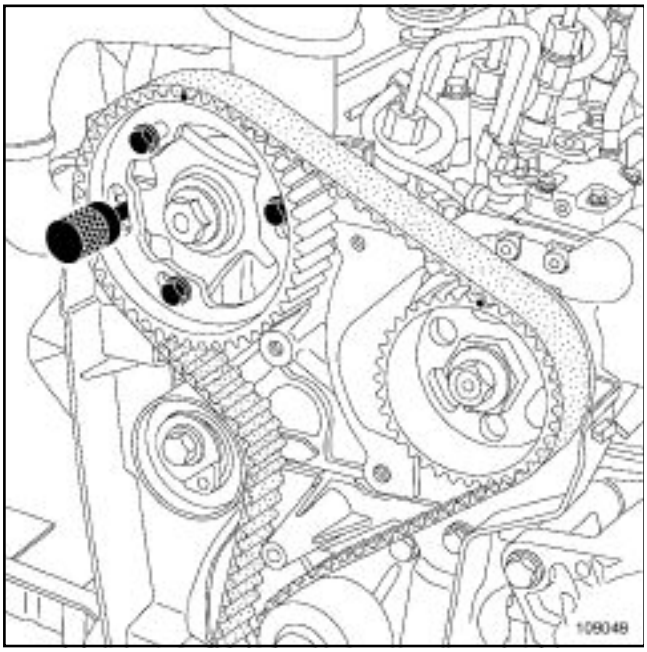

109049

Set the camshaft pulley using the **(Mot. 1430)** .

If this is not possible, repeat the timing belt refitting operation.

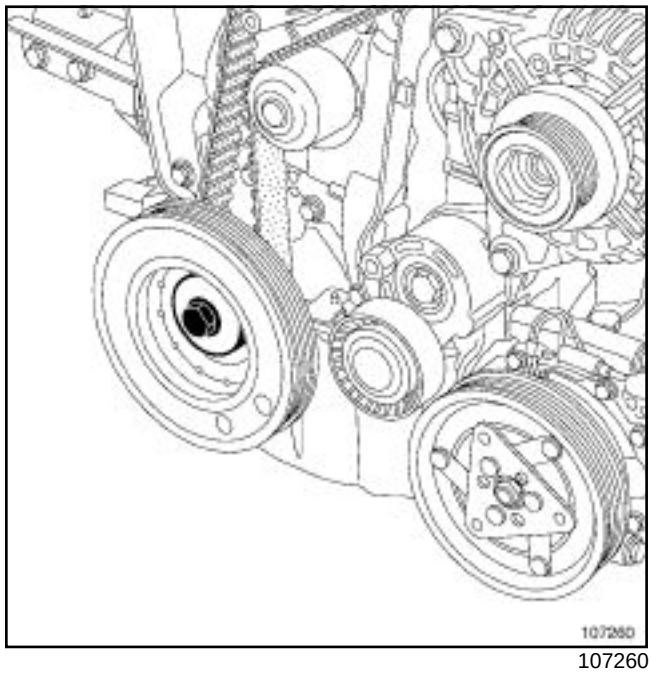

107260

Refit the accessories crankshaft pulley with a new bolt.

Tighten to torque and angle (crankshaft in contact with the TDC setting pin) **the crankshaft accessories pulley M14 bolt (120 ± 12 Nm + 95° ± 15°)** .

Remove the following tools:

- TDC setting pin **(Mot. 1489)** ,
- the set of 5 timing pins for the camshaft and crankshaft pulleys **(Mot. 1430)** .

Refit the TDC pin plug, coating the thread with **SILICONE ADHESIVE SEALANT** .

Tighten to torque the **TDC pin plug (20 ± 2 Nm)** .

K9K, and 732 or 764

K9K, and 732

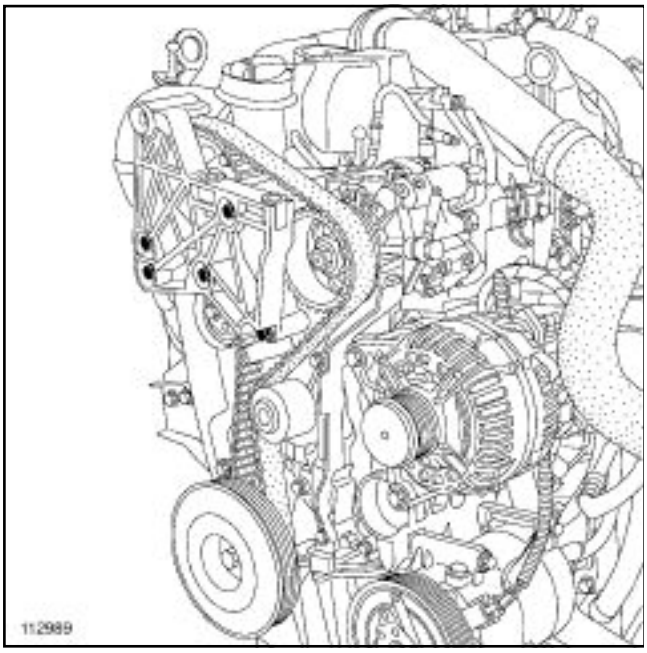

112989

Refit the cylinder head suspended mounting.

Tighten to torque the **cylinder head suspended mounting bolts (21 ± 2.1 Nm)** .

Timing - cylinder head: Refitting

K9K, and 732 or 764

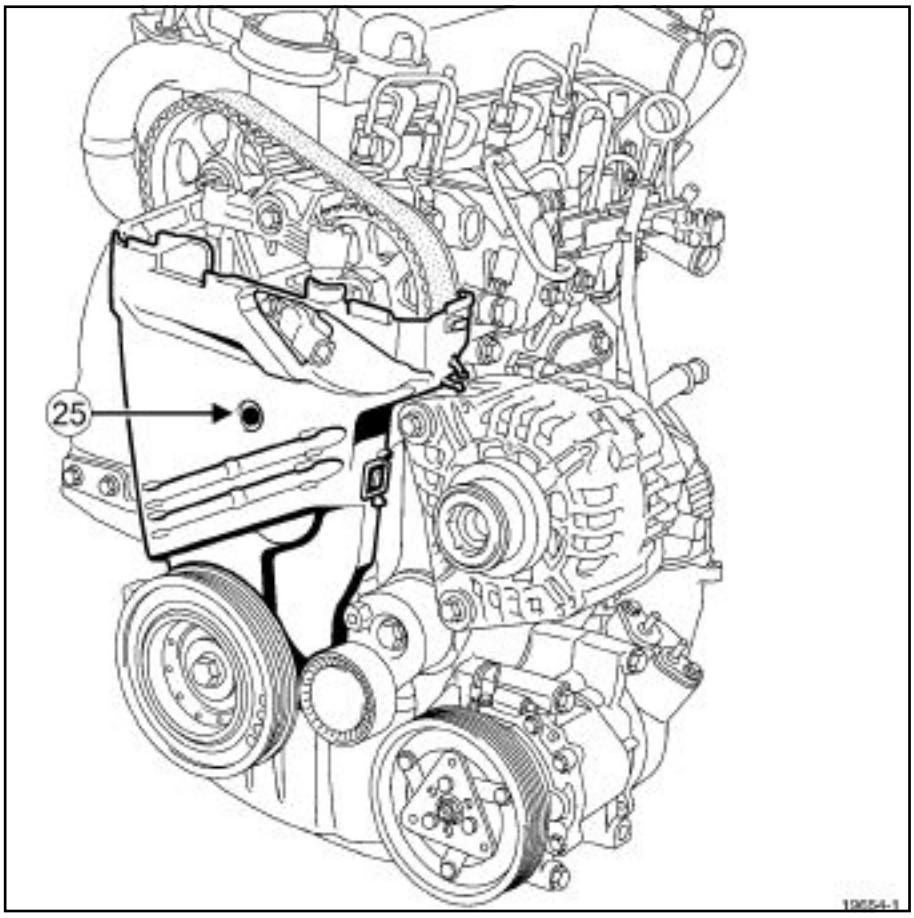

19654-1

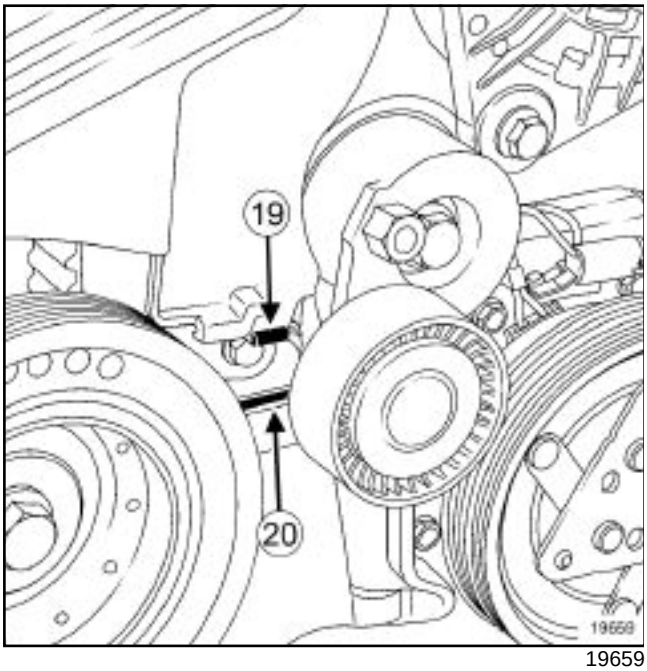

19659

Refit:

- the lower timing cover, positioning the tab (**19**) in the inner timing cover hole (**20**) ,
- the timing cover plastic bolt (**25**) .

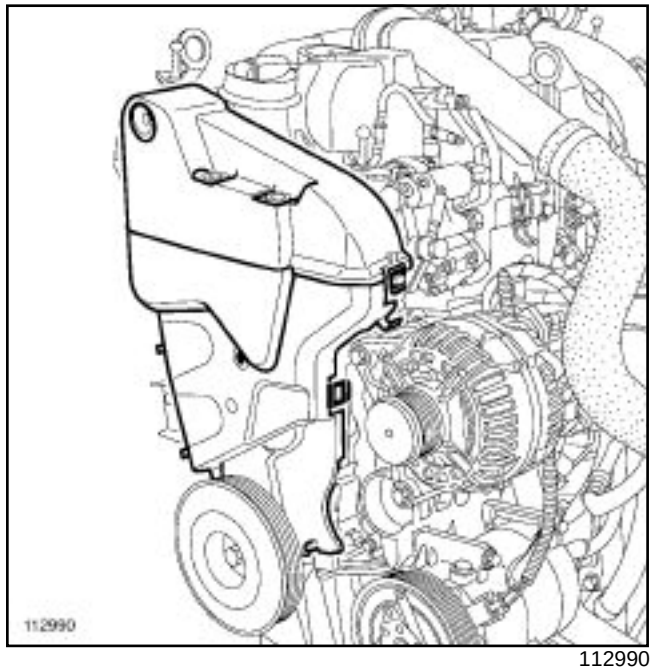

112990

Refit the upper timing cover.

K9K, and 732 or 764

K9K, and 764

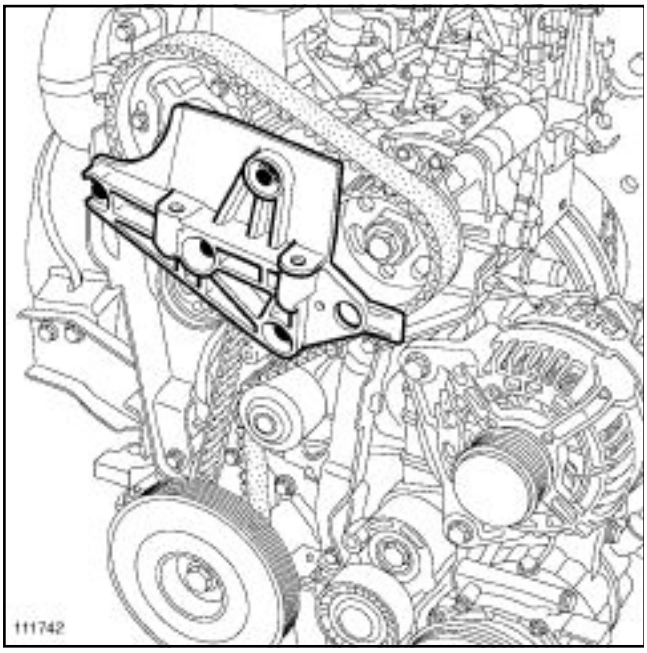

111742

Refit the cylinder head suspended mounting.

Tighten to torque the **cylinder head suspended mounting bolts (21 ± 2.1 Nm)** .

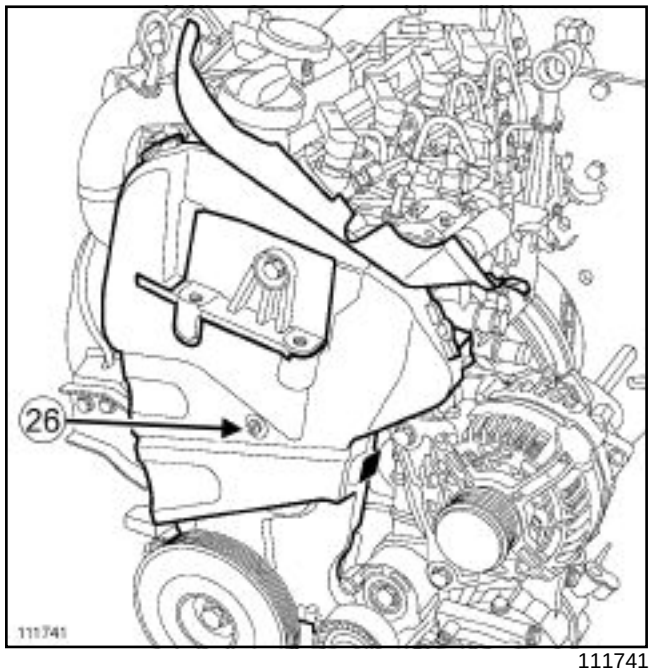

111741

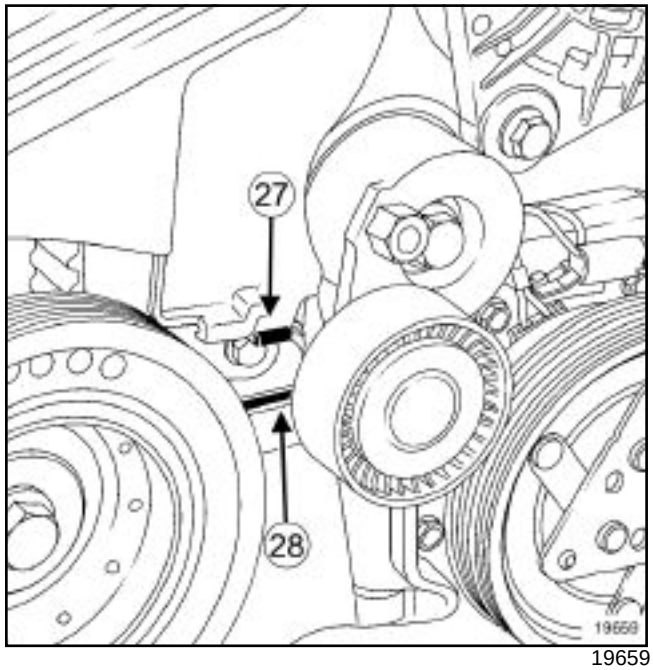

19659

Refit:

- the timing cover, positioning the tab (**27**) in the inner timing cover hole (**28**) ,
- the timing cover plastic bolt (**26**) .

Timing - cylinder head: Refitting

K9K, and 274 or 276 or 714 or 716 or 718 or 766 or 768

Special tooling required	
Mot. 1430	Set of 5 crankshaft and camshaft pulley timing pins.
Mot. 1489	TDC locating pin.

Tightening torques ▽	
cylinder head mounting bolts	**25 ± 2.5 Nm**
cylinder head mounting bolts	**255° ± 10°**
rocker cover mounting bolts	**12 ± 1.2 Nm**
turbocharger oil return pipe mounting bolts	**12 ± 1.2 Nm**
the nuts mounting the catalytic converter on the turbocharger	**26 ± 2.6 Nm**
the bolts mounting the catalytic converter stay on the engine	**44 ± 4.4 Nm**
the bolts mounting the catalytic converter stay on the catalytic converter	**26 ± 2.6 Nm**
oil vapour recirculation valve mounting nuts	**12 ± 1.2 Nm**
inner timing cover mounting bolts	**9 ± 0.9 Nm**
tensioning roller bolt	**27 ± 2.7 N.m**
the camshaft pulley wheel bolts	**14 ± 1.4 Nm**
the tensioning roller bolt	**27 ± 2.7 Nm**
the camshaft pulley wheel bolts	**14± 1.4 Nm**
the crankshaft accessories pulley M14 bolt	**120 ± 12 Nm + 95° ± 15°**
TDC pin plug	**20 ± 2 Nm**

Tightening torques ▽	
cylinder head suspended mounting bolts	**21 ± 2.1 Nm**
high-pressure pump position sensor bolt	**8 Nm**

I - RECOMMENDATIONS FOR REPAIRING THE CYLINDER HEAD

IMPORTANT
Wear protective gloves during every operation.

WARNING
When handling the cylinder head gasket, use the cylinder barrel to hold it.

The sealing surfaces must be clean, dry and free from grease (avoid finger marks).

Applying excess sealant could cause it to be squeezed out when parts are tightened. A mixture of sealant and fluid could damage certain components (engine, radiator, etc.)

To obtain correct tightening of the cylinder head bolts, remove any oil from the cylinder head mounting holes using a syringe.

Do not retighten the cylinder head bolts after applying this procedure.

Do not lubricate the new cylinder head bolts.

II - PARTS AND CONSUMABLES FOR THE REPAIR

Parts always to be replaced for the cylinder head

- The cylinder head gasket,
- The cylinder head bolts,
- The rocker cover gasket,
- The oil vapour recirculation valve seal,
- The seals on the turbocharger oil return pipe,
- The catalytic converter seal.

Consumables

- Degreaser, part no. **77 11 224 559** ,
- Silicone adhesive sealant, part no. **77 11 227 484** .

K9K, and 274 or 276 or 714 or 716 or 718 or 766 or 768

III - EQUIPMENT REQUIRED FOR THE CYLINDER HEAD

- Torque/angle wrench,
- Torque wrench
- Cylinder head bolt tightening gauge (angular measuring type),
- Female torx socket (**14**),
- Protective gloves.

IV - REFITTING OF THE CYLINDER HEAD

Position the pistons at mid-stroke.

Apply degreaser to:

- the combustion side of the cylinder head,
- the combustion face of the cylinder block.

Check for the cylinder head centring dowels on the cylinder block.

Refit the cylinder head gasket (positioning the TOP facing upwards) onto the cylinder block.

Remove the cylinder head from the cylinder head support.

Refit:

- the cylinder head,
- the new cylinder head mounting bolts.

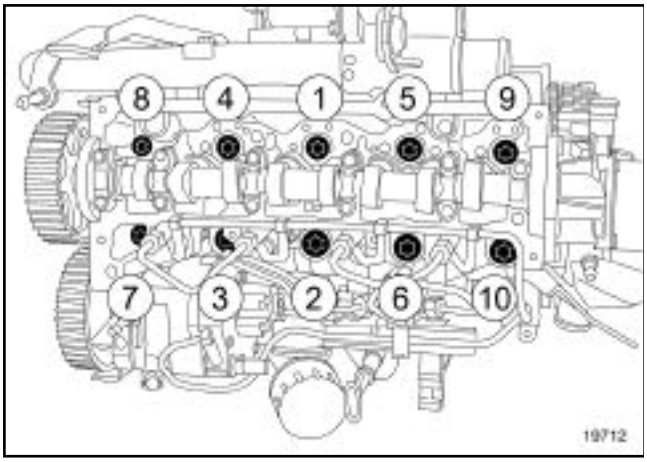

19712

Tighten to torque and in order the **cylinder head mounting bolts (25 ± 2.5 Nm)** .

Check that all the **cylinder head mounting bolts** are tightened to **(25 ± 2.5 Nm)** .

Angle tighten in order the **cylinder head mounting bolts (255° ± 10°)** .

Degrease the rocker cover sealing surface on the cylinder head.

Refit a new seal onto the rocker cover.

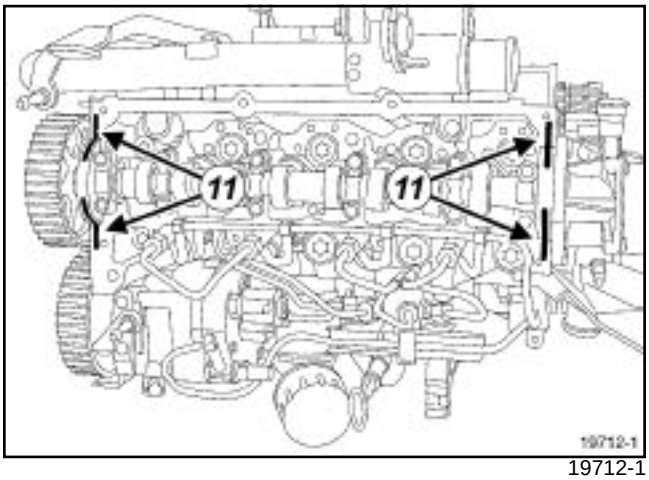

19712-1

Apply four beads (**11**) of **SILICONE ADHESIVE SEALANT** (**2 mms** in diameter).

Refit:

- the rocker cover,
- the rocker cover mounting bolts.

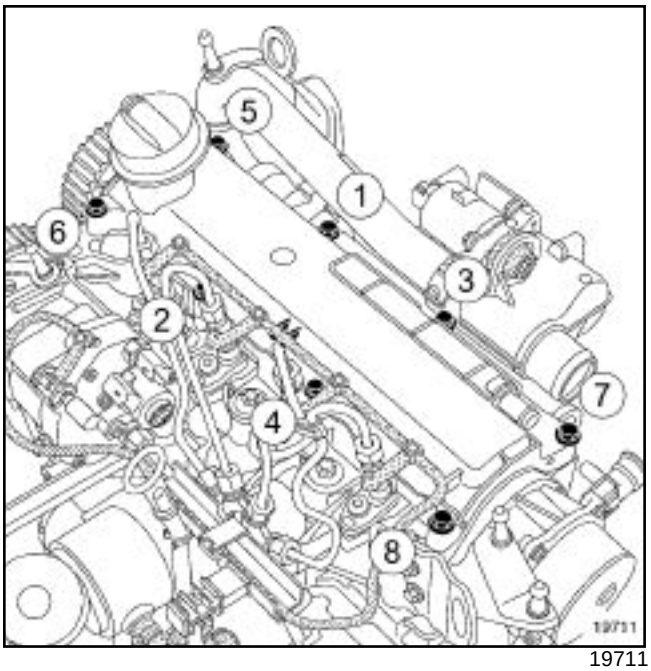

19711

Tighten to torque and in order the **rocker cover mounting bolts (12 ± 1.2 Nm)** .

Refit the dipstick guide tube.

Clip the fuel return pipe onto the rocker cover.

Fit the new seals onto the turbocharger oil return pipe.

K9K, and 274 or 276 or 714 or 716 or 718 or 766 or 768

Use engine oil to lubricate the turbocharger oil return pipe O-ring seals.

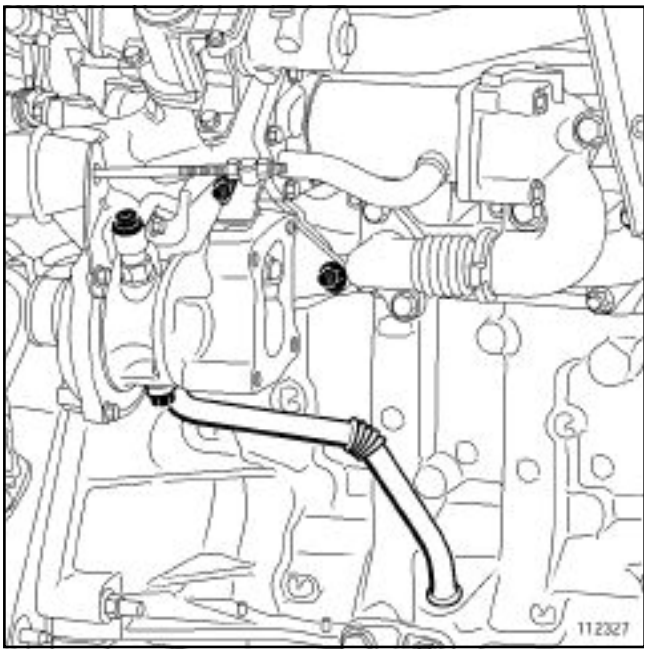

112327

Refit:

- the turbocharger oil return pipe,
- the turbocharger oil return pipe mounting bolts.

Tighten to torque the **turbocharger oil return pipe mounting bolts (12 ± 1.2 Nm)** .

Fit a new seal between the turbocharger and the catalytic converter.

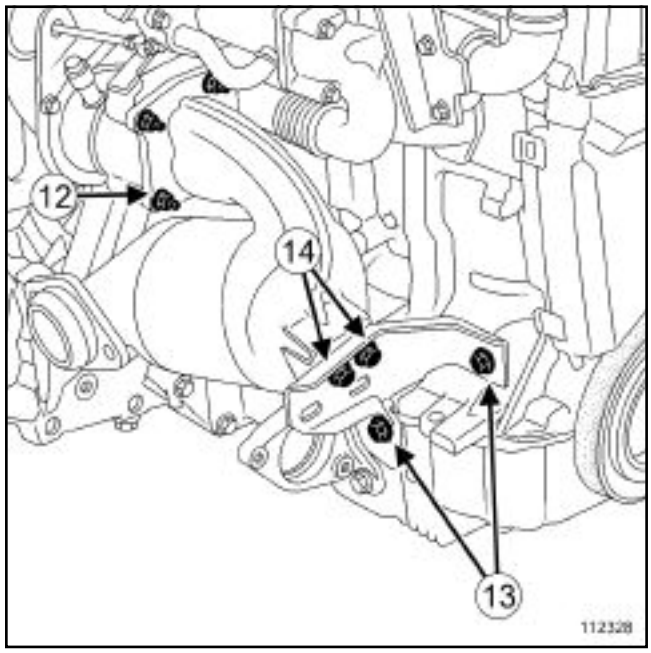

112328

Refit:

- the catalytic converter,
- the nuts mounting the catalytic converter on the turbocharger,
- the catalytic converter mounting stay,
- the catalytic converter stay mounting bolts.

Tighten to torque:

- **the nuts mounting the catalytic converter on the turbocharger (26 ± 2.6 Nm)** (**12**) ,
- **the bolts mounting the catalytic converter stay on the engine (44 ± 4.4 Nm)** (**13**) ,
- **the bolts mounting the catalytic converter stay on the catalytic converter (26 ± 2.6 Nm)** (**14**) .

K9K, and 274 or 276 or 714 or 716 or 718 or 766 or 768

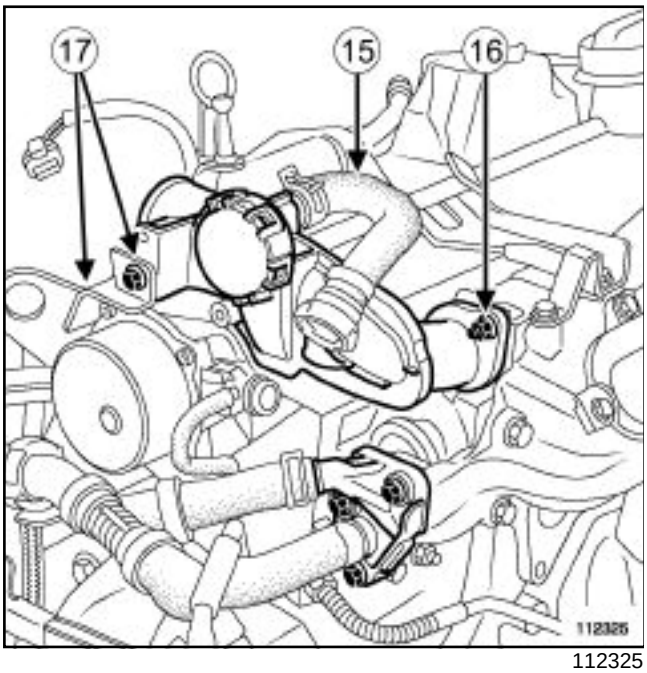

112325

Fit a new seal onto the oil vapour recirculation valve.

Refit:

- the oil vapour recirculation valve,
- the oil vapour recirculation valve mounting nuts (**16**) .

Tighten to torque the **oil vapour recirculation valve mounting nuts (12 ± 1.2 Nm)** .

Connect the oil vapour recirculation pipe (**15**) .

Refit:

- the oil vapour recirculation valve retaining bracket,
- the mounting bolts of the oil vapour recirculation valve retaining bracket.

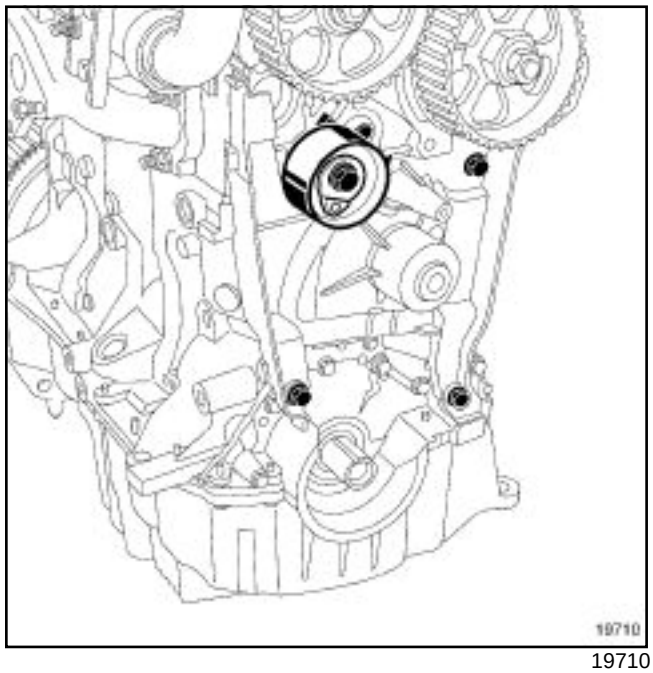

19710

Refit:

- the inner timing cover (tilting the alternator if necessary),
- the inner timing cover mounting bolts.

Tighten to torque the **inner timing cover mounting bolts (9 ± 0.9 Nm)** .

V - RECOMMENDATIONS FOR REPAIRING THE TIMING BELT

IMPORTANT

Wear protective gloves during every operation.

WARNING

The belt must be replaced with a new one if it has been removed.

Never turn the engine in the opposite direction to its normal operating direction.

Do not run the engine without the accessories belt so as not to damage the crankshaft accessories pulley.

When replacing the belt, always replace the tensioning rollers and fixed rollers.

K9K, and 274 or 276 or 714 or 716 or 718 or 766 or 768

VI - PARTS AND CONSUMABLES FOR THE REPAIR

Pièces à remplacer systématiquement pour la distribution

- Timing belt,
- Timing belt tensioning roller,
- Crankshaft accessories pulley bolt.

Ingrédients

- Silicone adhesive sealant, part no. **77 11 227 484**

VII - EQUIPMENT REQUIRED FOR THE TIMING BELT

- Protective gloves,
- Allen key (**6 mm**),
- Female torx socket (**14**),
- Offset wrench (**18 mm**),
- Torque/angle wrench,
- Torque wrench
- Cylinder head bolt tightening gauge (angular measuring type).

VIII - REFITTING THE TIMING

Refit the crankshaft timing sprocket.

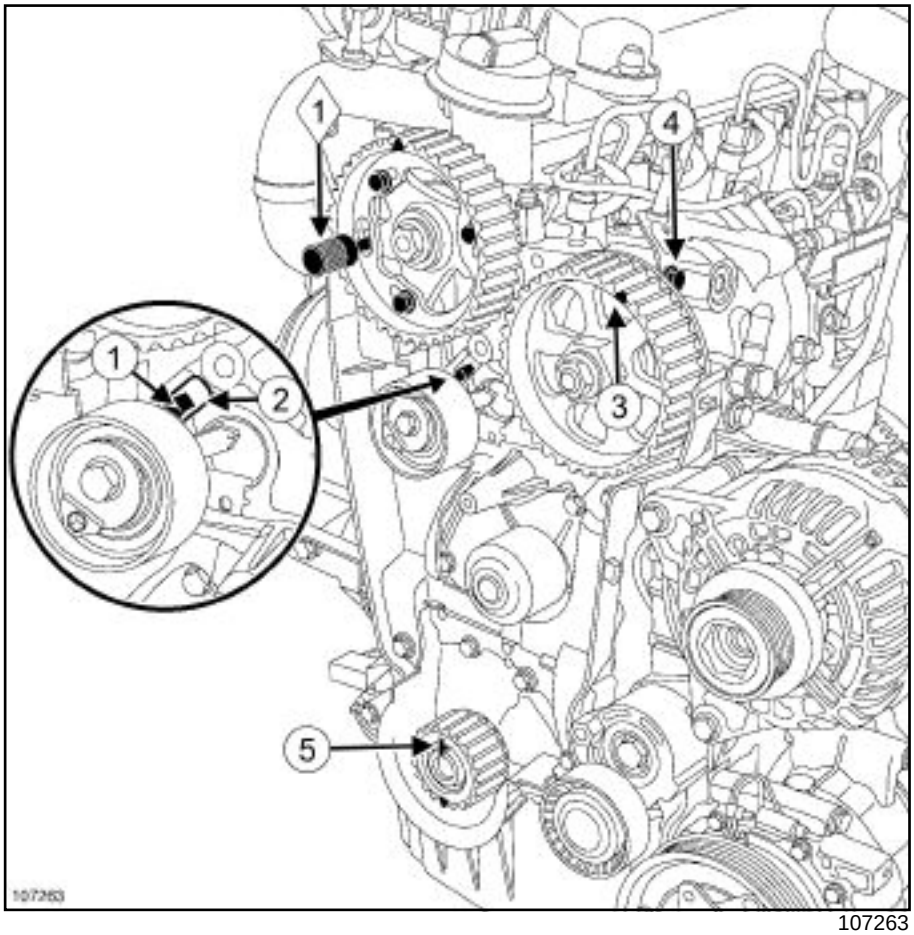

107263

Refit the timing tensioning roller.

Put the tensioning roller spigot (**1**) in the cylinder head groove (**2**) .

Engage the pin (**1**) **(Mot. 1430)** in the holes of the camshaft pulley and cylinder head, turning the camshaft using an **18 mm** offset wrench if necessary.

Check that the mark on the high-pressure pump (**3**) is opposite the bolt head (**4**) .

K9K, and 274 or 276 or 714 or 716 or 718 or 766 or 768

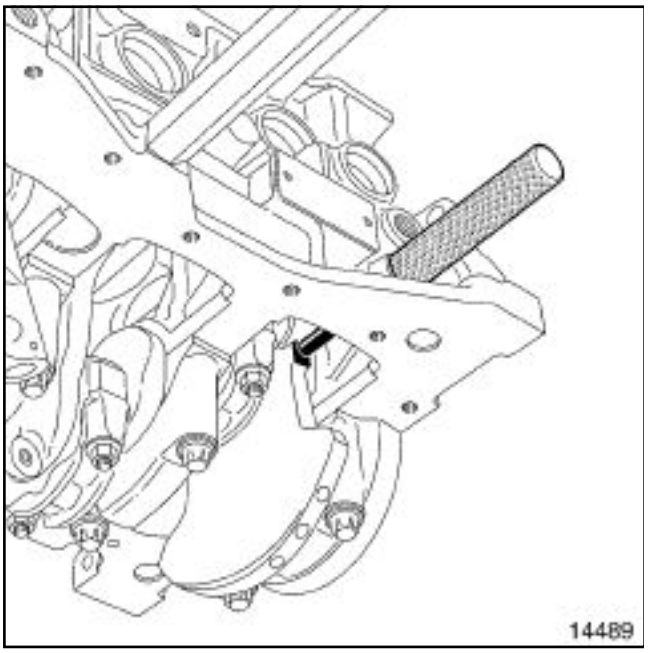

14489

Position the crankshaft so that it presses against the TDC setting pin **(Mot. 1489)** (the crankshaft sprocket cotter ***(5)*** must face upwards).

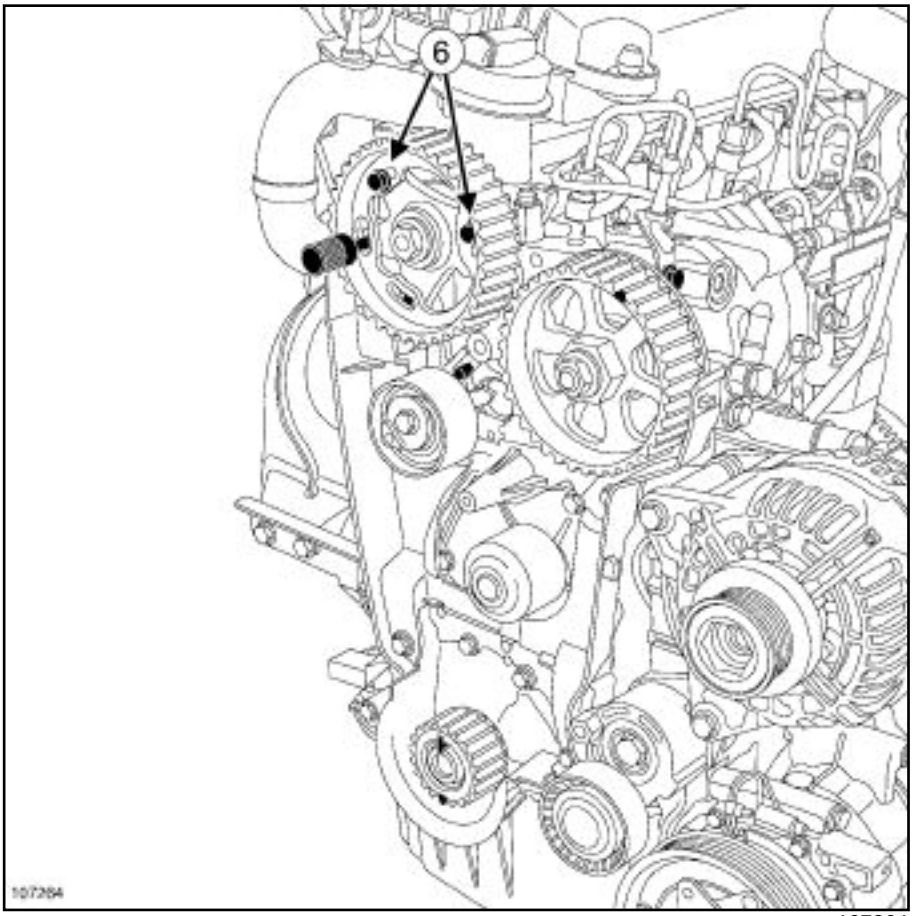

107264

Remove one bolt from the camshaft pulley wheel.

Loosen the two other camshaft pulley wheel bolts (**6**) by one turn.

K9K, and 274 or 276 or 714 or 716 or 718 or 766 or 768

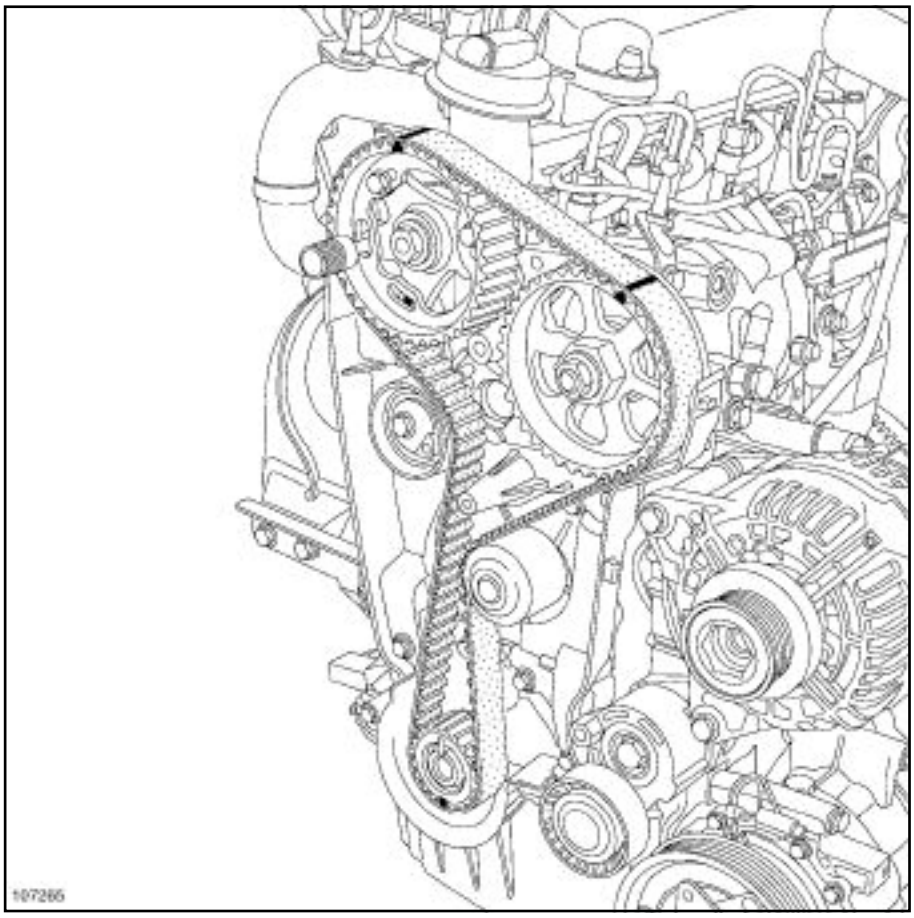

107265

Fit the timing belt, starting with the crankshaft sprocket, by aligning the marks on the belt with those on the crankshaft sprockets, the camshaft and the high-pressure pump.

note:

There should be 19 tooth belt grooves between the camshaft sprocket marks and the high-pressure pump, and 51 tooth valleys between the crankshaft sprockets and the high-pressure pump.

K9K, and 274 or 276 or 714 or 716 or 718 or 766 or 768

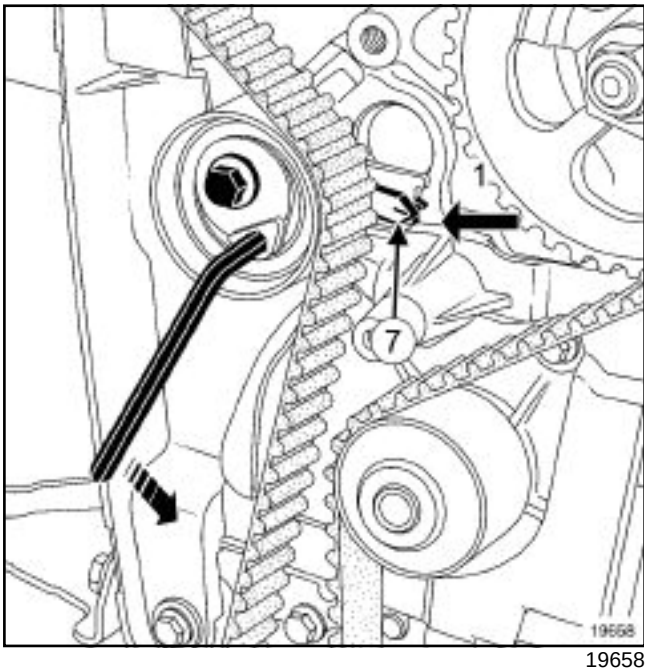

19658

Position the tensioning roller adjustable index (**7**) opposite the spigot, turning the eccentric cam anti-clockwise using a **6 mm** Allen key.

Tighten to torque the **tensioning roller bolt (27 ± 2.7 N.m)** .

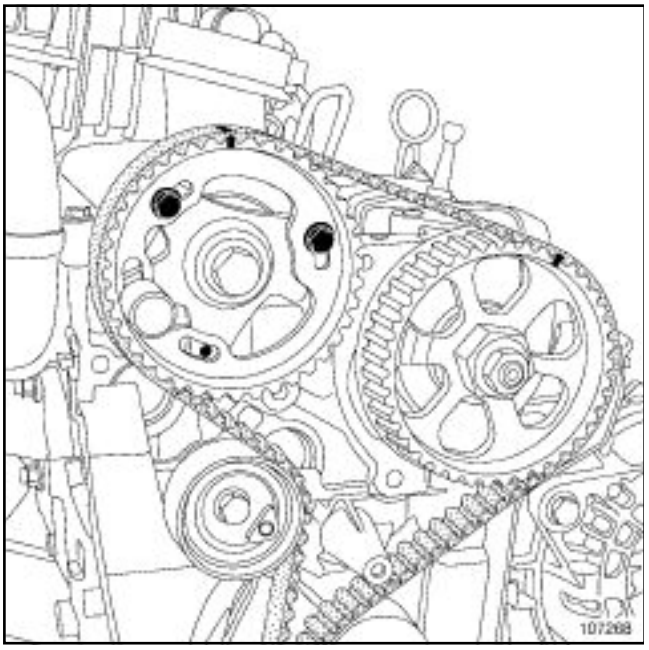

107268

Check that the camshaft pulley hub bolts are not fully up against the camshaft pulley wheel.

K9K, and 274 or 276 or 714 or 716 or 718 or 766 or 768

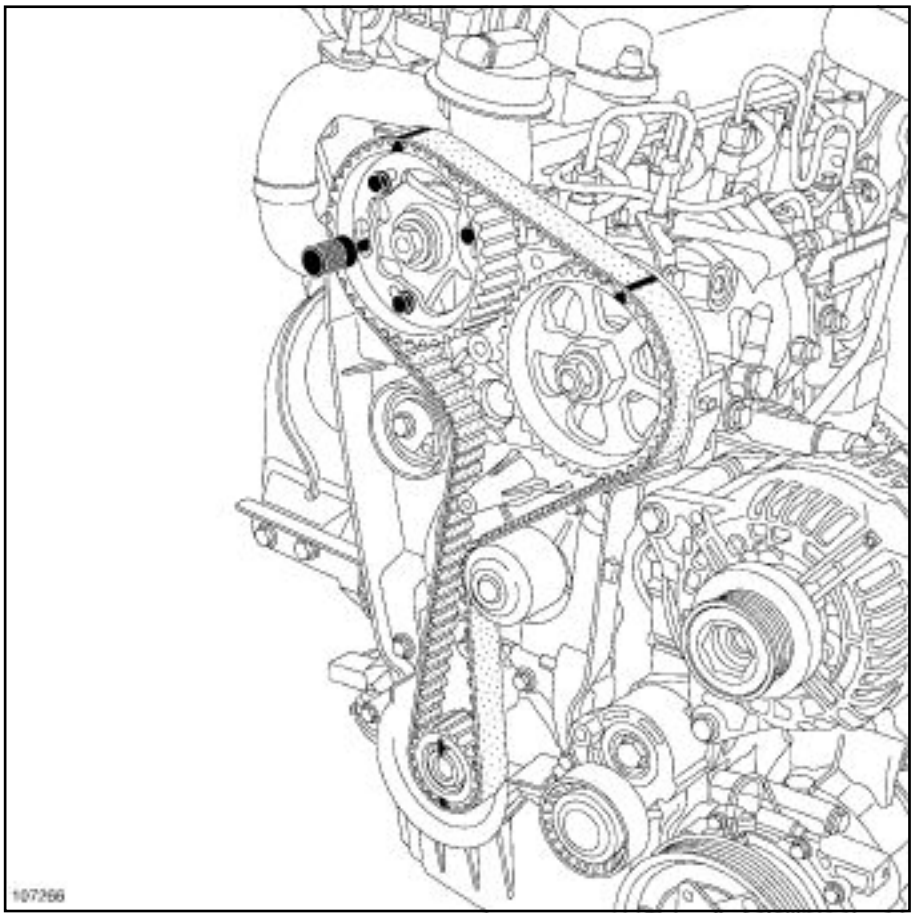

107266

Refit the bolt to the camshaft pulley wheel.

Tighten to torque **the camshaft pulley wheel bolts (14 ± 1.4 Nm)** .

Remove:

- the TDC setting pin **(Mot. 1489)** ,
- the set of 5 timing pins for the camshaft and crankshaft pulleys **(Mot. 1430)** .

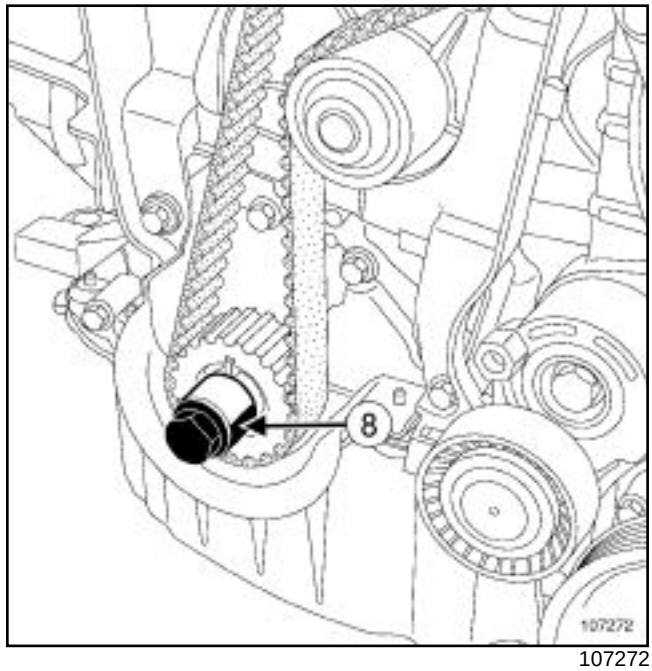

107272

Tighten the old crankshaft accessories pulley bolt fitted with a spacer (which does not cover the timing sprocket mark) (**8**) onto the crankshaft.

K9K, and 274 or 276 or 714 or 716 or 718 or 766 or 768

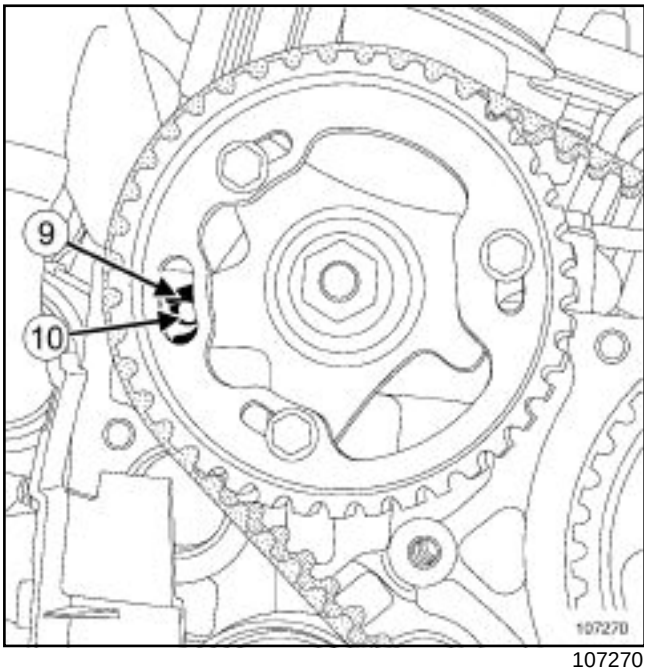

107270

Rotate the crankshaft clockwise through two revolutions (timing end), before the camshaft pulley hole (**9**) is opposite the cylinder head hole (**10**) .

Screw the TDC setting pin **(Mot. 1489)** into the cylinder block.

Bring the crankshaft slowly and smoothly against the TDC setting pin.

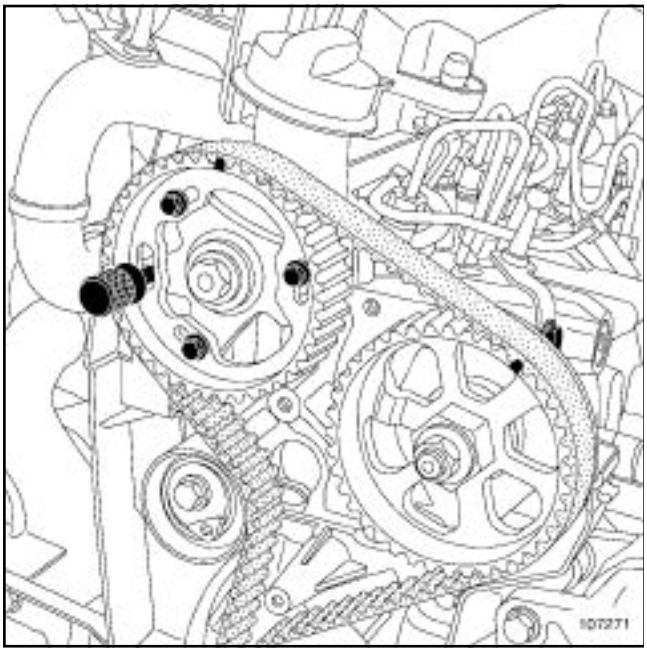

107271

Set the camshaft pulley using the **(Mot. 1430)** .

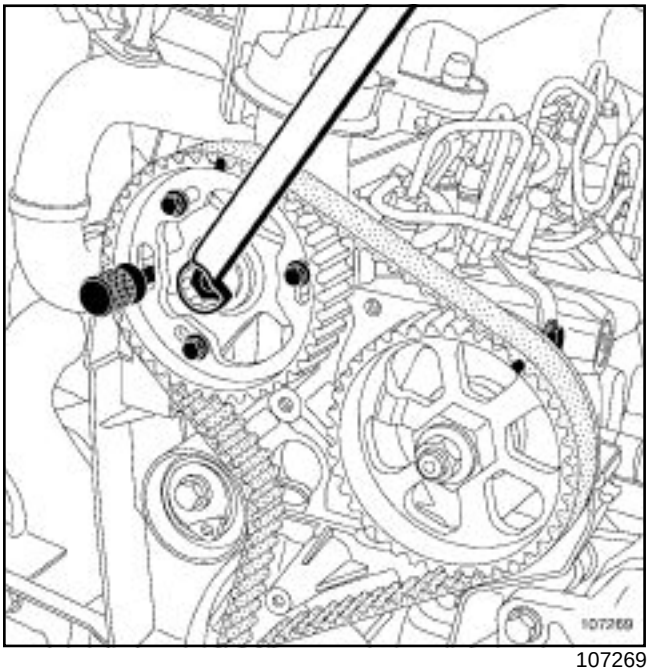

107269

If the pin **(Mot. 1430)** does not engage:

loosen the camshaft pulley wheel bolts by one turn at most,

Turn the camshaft pulley hub using an **18 mm** offset wrench to set the camshaft pulley hub timing.

Do not retighten the camshaft pulley wheel bolts.

K9K, and 274 or 276 or 714 or 716 or 718 or 766 or 768

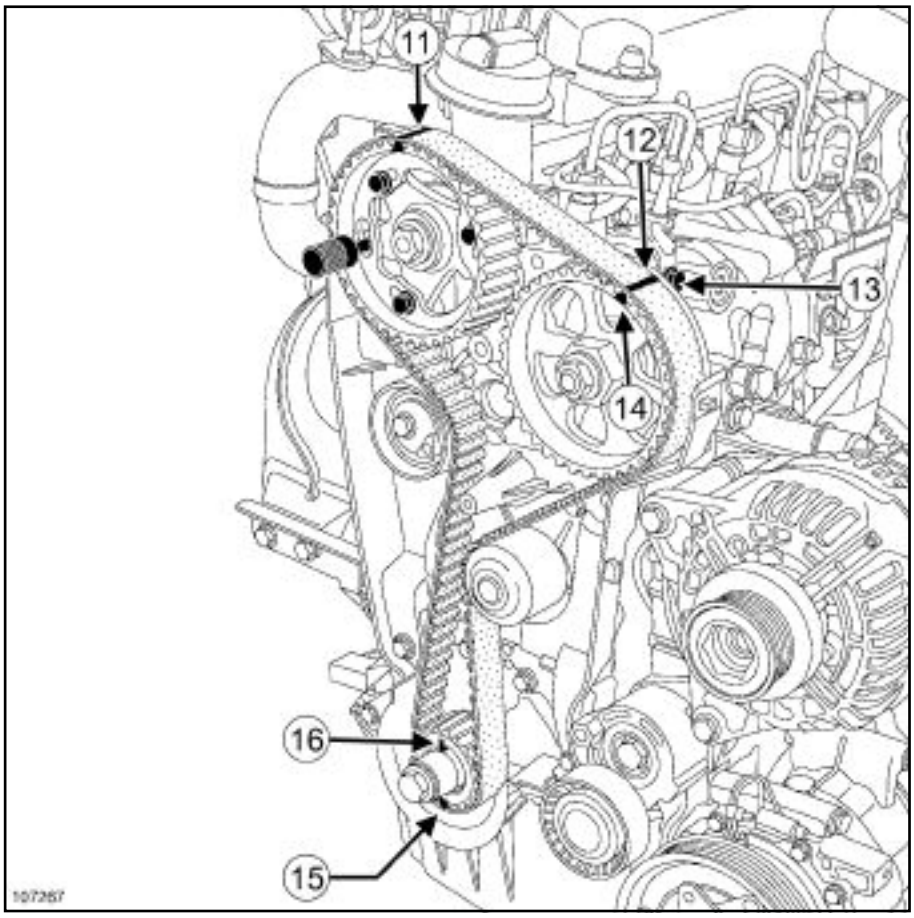

107267

Check:

- that the high-pressure pump sprocket mark (**14**) is opposite the bolt head (**13**) ,
- that the crankshaft timing sprocket cotter (**16**) is positioned vertically at the top,
- that there are 19 tooth belt grooves between the camshaft sprocket marks (**11**) and the high-pressure pump sprocket (**12**) ,
- that there are 51 tooth belt grooves between the crankshaft sprocket marks (**15**) and the high-pressure pump sprocket (**12**) .

note:

After two turns, the tensioning roller index markers may be in two different positions.

The rotation of the tensioning roller eccentric cam depends on the position.

K9K, and 274 or 276 or 714 or 716 or 718 or 766 or 768

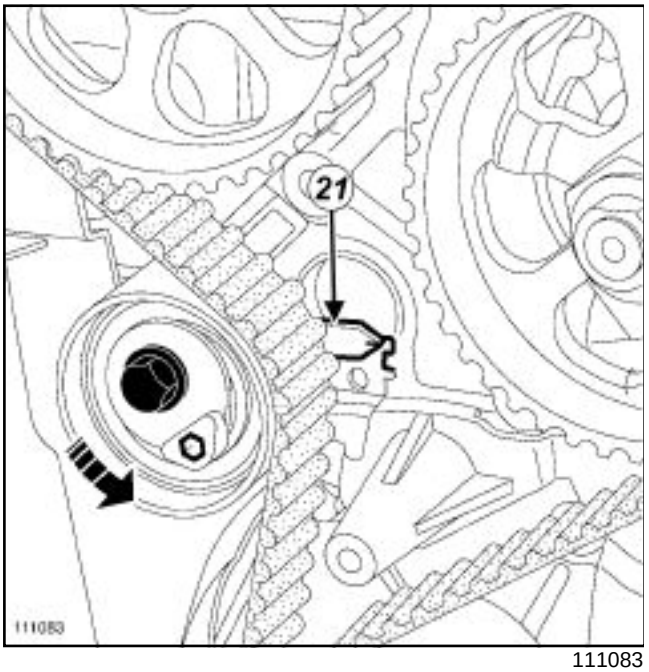

111083

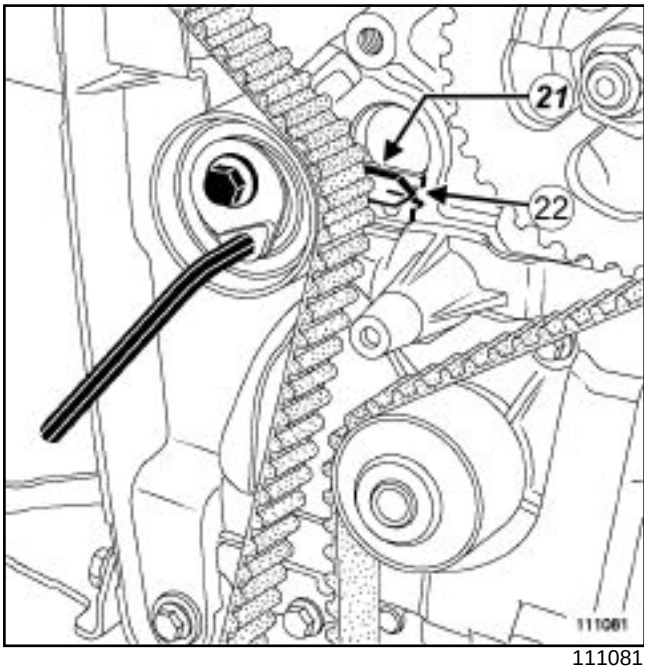

111081

Loosen the tensioning roller bolt by no more than one turn, holding it with a **6 mm** Allen key.

Gradually align the adjustable index (**21**) in the middle of the timing window (**22**) , turning the key anti-clockwise.

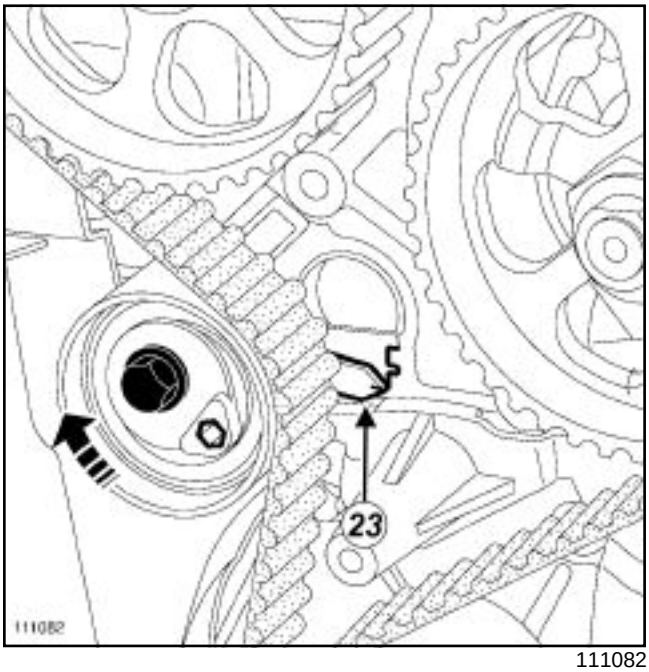

111082

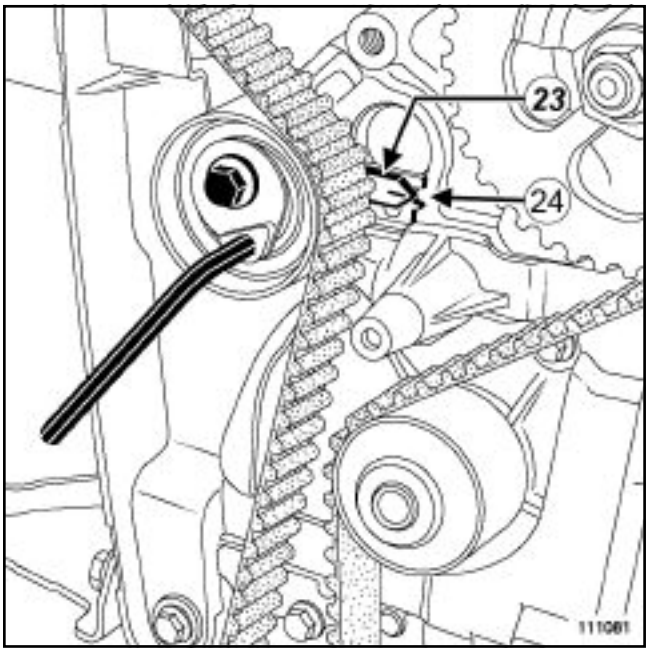

111081

Loosen the tensioning roller bolt by no more than one turn, holding it with a **6 mm** Allen key.

Gradually align the adjustable index (**23**) in the middle of the timing window (**24**) , turning the key clockwise.

Tighten to torque:

- **the tensioning roller bolt (27 ± 2.7 Nm)** ,
- **the camshaft pulley wheel bolts (14± 1.4 Nm)** .

Remove the following tools:

- TDC setting pin, **(Mot. 1489)**

K9K, and 274 or 276 or 714 or 716 or 718 or 766 or 768

- the set of 5 timing pins for the camshaft and crankshaft pulleys **(Mot. 1430)** .

Rotate the crankshaft clockwise through two revolutions (timing end), before the camshaft pulley hole is opposite the cylinder head hole.

Screw the TDC setting pin **(Mot. 1489)** into the cylinder block.

Bring the crankshaft slowly and smoothly into contact with the TDC setting pin.

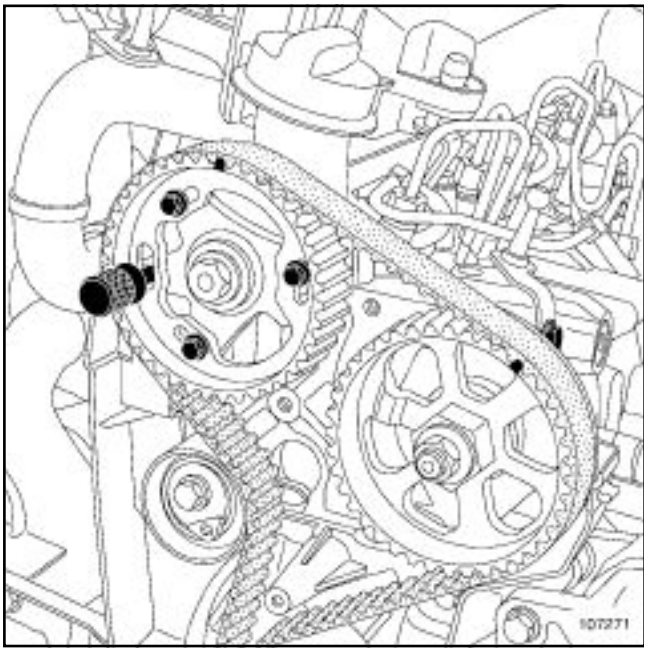

107271

Set the camshaft pulley using the **(Mot. 1430)** .

If this is not possible, repeat the timing belt refitting operation.

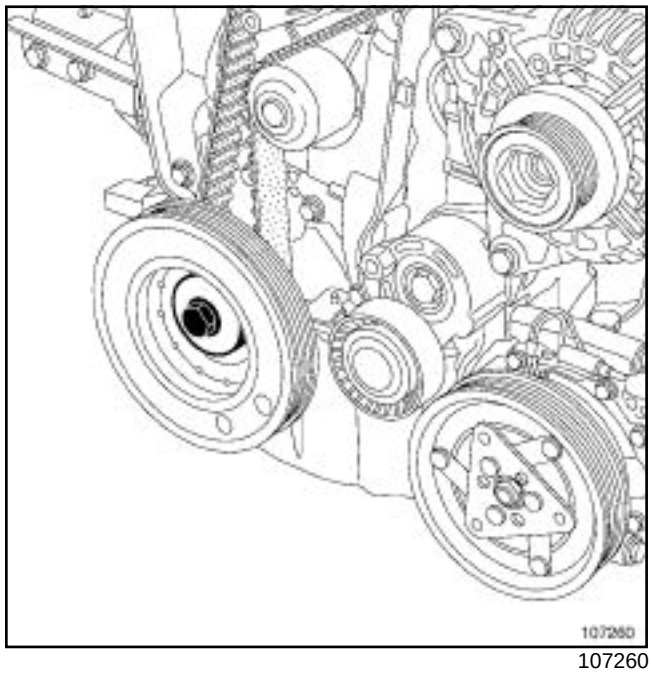

107260

Refit the accessories crankshaft pulley with a new bolt.

Tighten to torque and angle (crankshaft in contact with the TDC setting pin) **the crankshaft accessories pulley M14 bolt (120 ± 12 Nm + 95° ± 15°)** .

Remove the following tools:

- TDC setting pin, **(Mot. 1489)**
- the set of 5 timing pins for the camshaft and crankshaft pulleys **(Mot. 1430)** .

Refit the TDC pin plug, coating the thread with **SILICONE ADHESIVE SEALANT** .

Tighten to torque the **TDC pin plug (20 ± 2 Nm)** .

K9K, and 274 or 276 or 714 or 716 or 718 or 766 or 768

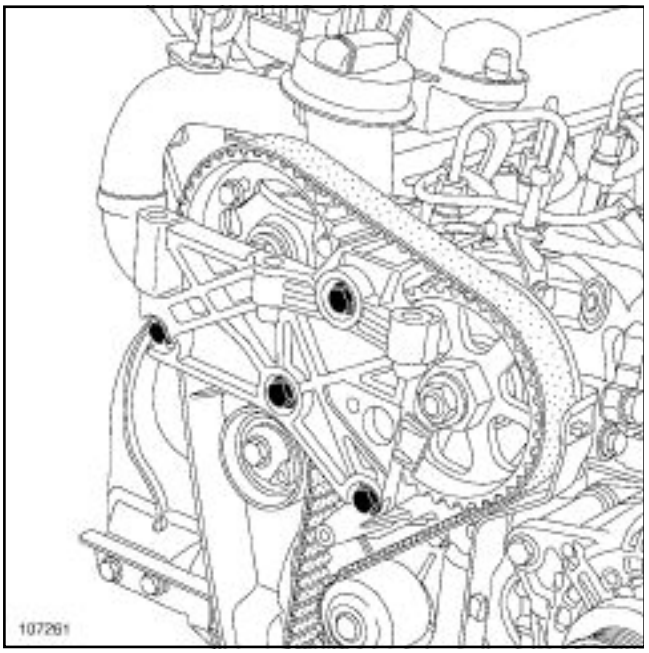

107261

Refit the cylinder head suspended mounting.

Tighten to torque the **cylinder head suspended mounting bolts (21 ± 2.1 Nm)** .

K9K, and 274 or 276 or 714 or 716 or 718 or 766 or 768

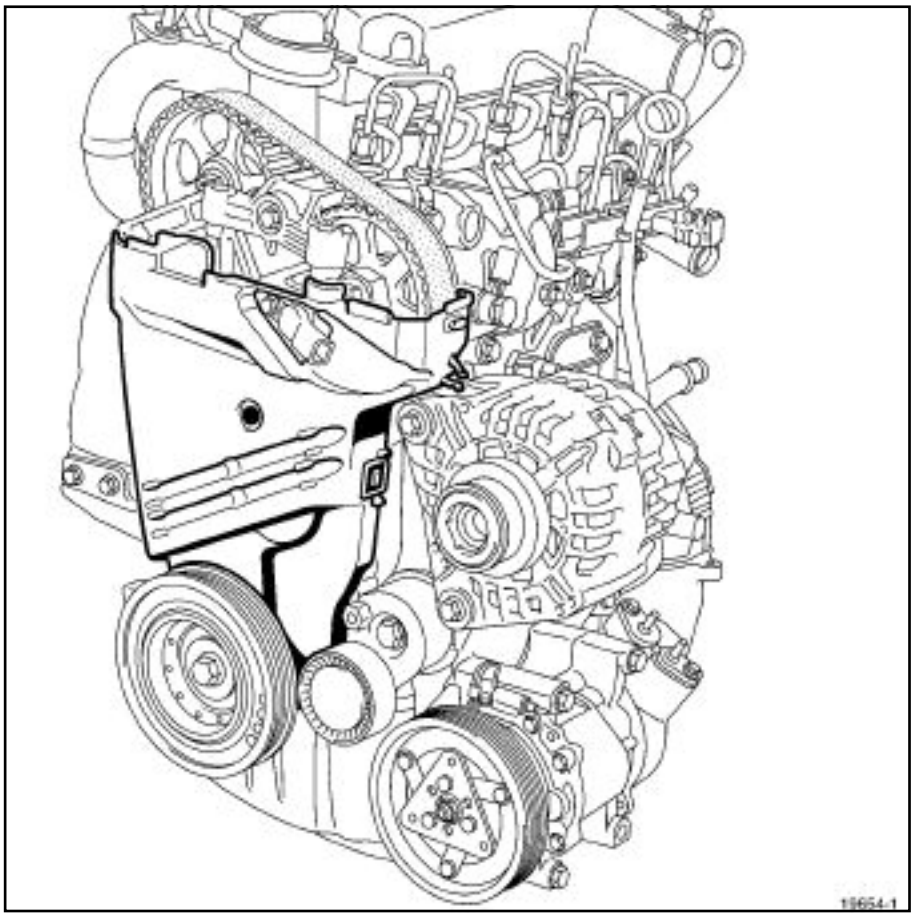

19654-1

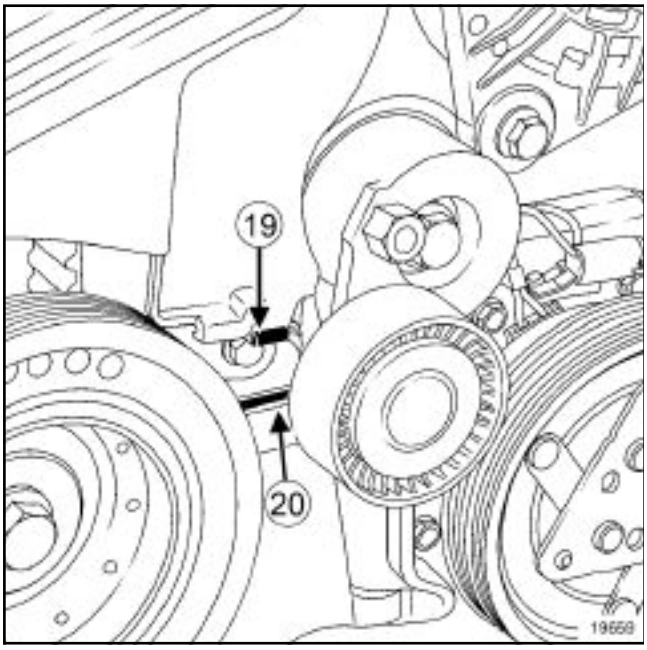

19659

Refit:

- the lower timing cover, positioning the tab (**19**) in the inner timing cover hole (**20**) ,
- the timing cover plastic mounting bolt.

K9K, and 274 or 276 or 714 or 716 or 718 or 766 or 768

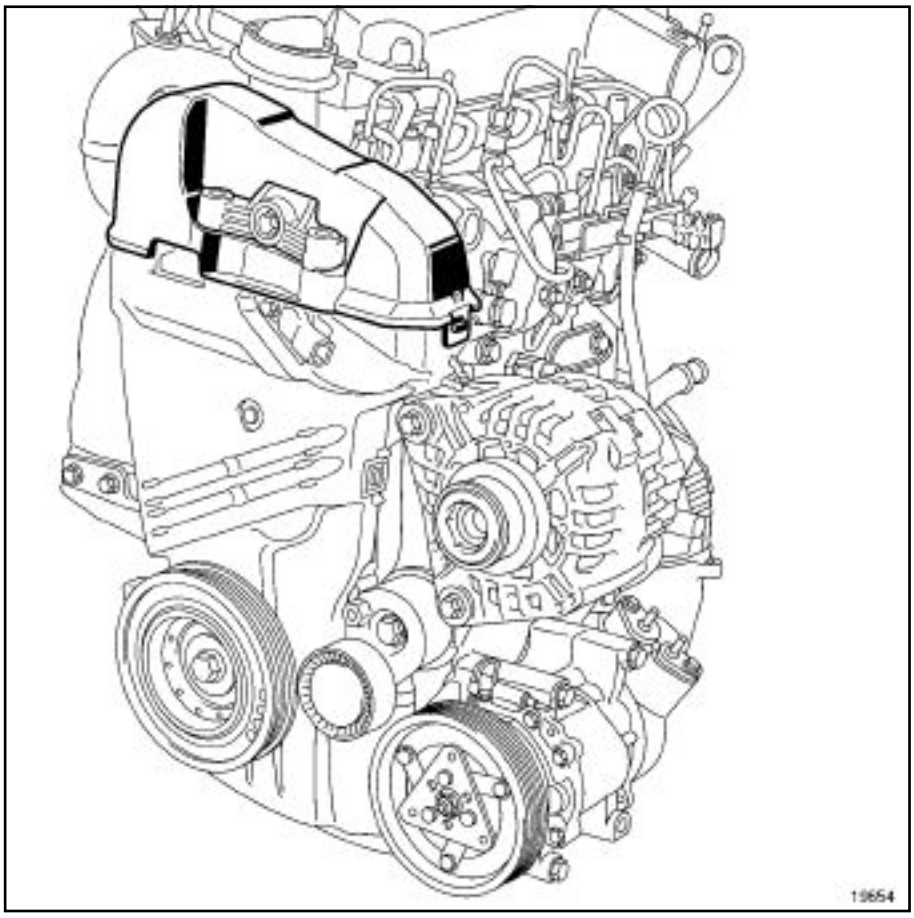

19654

Refit the high-pressure pump position sensor.

Tighten to torque the **high-pressure pump position sensor bolt (8 Nm)** .

Refit the upper timing cover.

Special tooling required	
Mot. 1638	Accessories belt tension tool. For engines fitted with a mechanical tensioning roller.
Mot. 1505	Belt tension setting tool (frequency meter)
Mot. 1715	Belt tension checking tool (frequency indicator).

Tightening torques ▽	
mechanical tensioning roller mounting bolts	**35 ± 3.5 Nm**
auto tensioner mounting bolt	**40 ± 4 Nm**

I - RECOMMENDATIONS FOR REPAIR

IMPORTANT
Wear protective gloves during every operation.

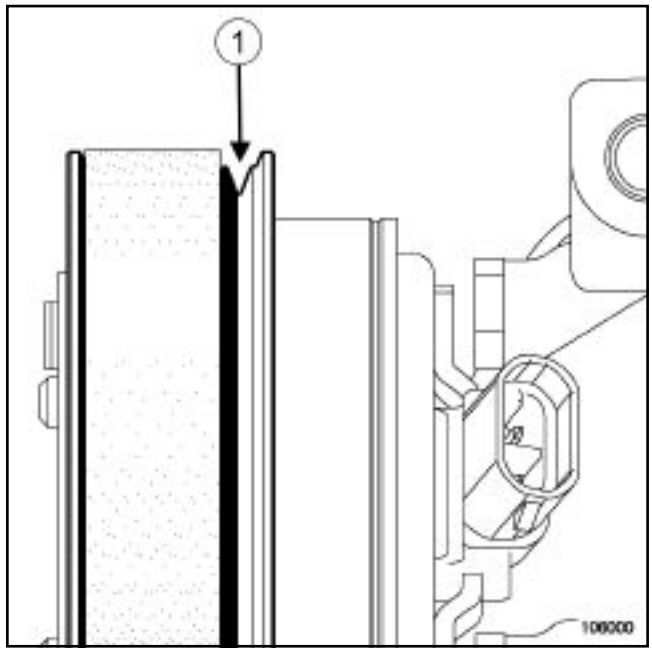

106000

WARNING
Certain accessories belts have five teeth whereas the air conditioning compressor pulley, power-assisted steering pump pulley, and alternator pulley all have six teeth. In this case, it is essential to check that the inner tooth (**1**) of the pulleys remains free when fitting the accessories belt.

Never turn the engine in the opposite direction to its normal operating direction.

Use a brush to remove any deposits from the crankshaft accessories pulley V grooves.

For engines fitted with a mechanical tensioning roller, it is essential to replace the tensioning roller mounting bolts.

II - PARTS AND CONSUMABLES FOR THE REPAIR

Parts always to be replaced

- The mechanical or automatic tensioning roller,
- The mechanical tensioning roller mounting bolts with **M8 bolts - 125 X 20** , part no. **77 03 002 059** ,
- The accessories belt.

III - EQUIPMENT REQUIRED

- Brush,
- Torque wrench

- Protective gloves,
- Tubular hexagon box spanner (**16 mm**),
- Offset wrench (**16 mm**).

IV - REFITTING

1 - Engine without air conditioning

Use a brush to remove any deposits from the crankshaft accessories pulley V grooves.

Refit:

- the tensioning roller,
- the new tensioning roller mounting bolts.

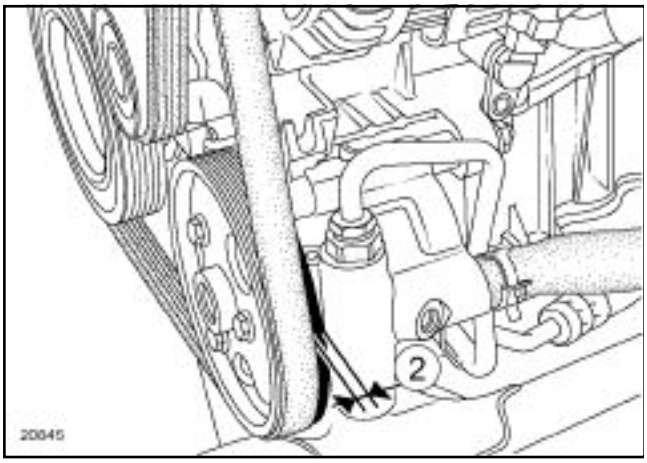

20845

It is essential to leave one inner tooth (**2**) of the pulleys free for engines fitted with a belt with five teeth for pulleys with six teeth.

Refit the accessories belt.

Check that the two mechanical tensioning roller bolts are not overtightened.

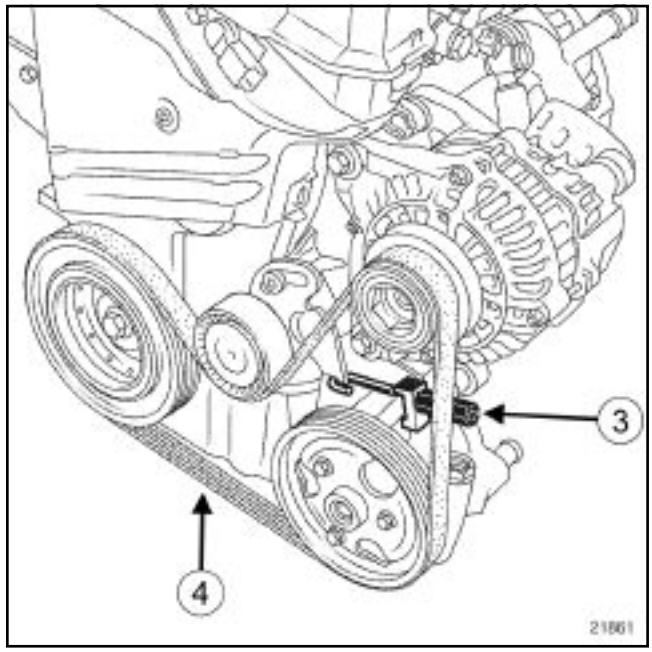

21861

Fit the **(Mot. 1638)** into the tensioning roller notch (as indicated in the diagram).

Tension the accessories belt using the **(Mot. 1638)** by tightening nut (**3**) .

Check the accessories belt tension at (**4**) using the **(Mot. 1505)** or **(Mot. 1715)** .

The accessories belt tension must be between **223 and 245 Hz** .

It is essential to turn the engine through two revolutions to position the accessories belt correctly.

Check that the accessories belt tension is between **223 and 245 Hz** at measuring point ***(4)*** .

Adjust the accessories belt tension if necessary.

Tighten to torque the **mechanical tensioning roller mounting bolts (35 ± 3.5 Nm)** .

2 - Engine with air conditioning

Use a brush to remove any deposits from the crankshaft accessories pulley V grooves.

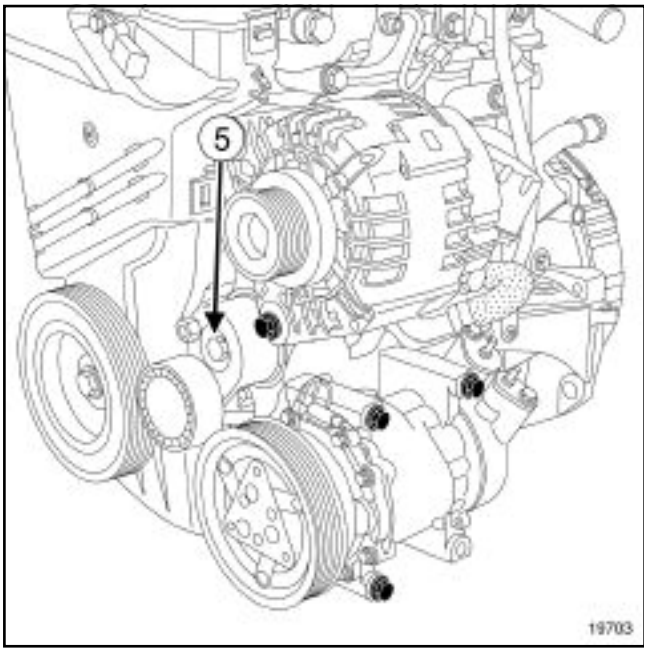

19703

Refit:

- the auto tensioner,
- the auto tensioner mounting bolt (**5**) .

Tighten to torque the **auto tensioner mounting bolt (40 ± 4 Nm)** .

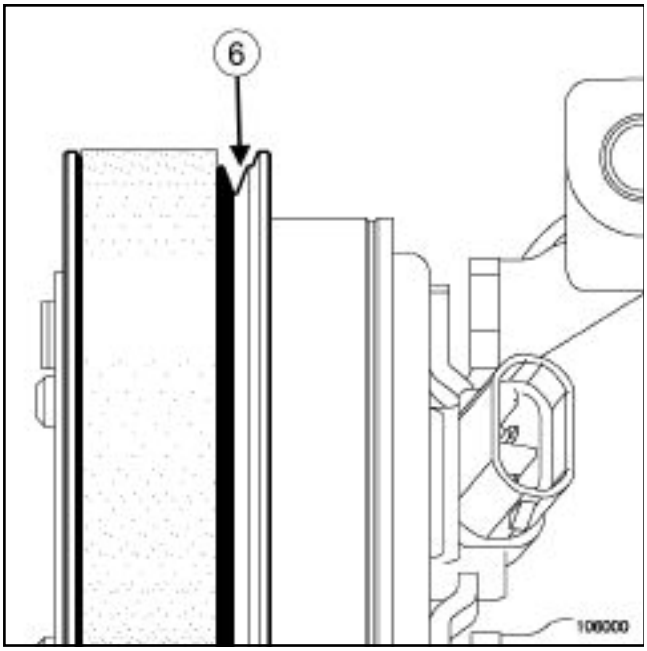

106000

It is essential to leave one inner tooth (**6**) of the pulleys free for engines fitted with a belt with five teeth for pulleys with six teeth.

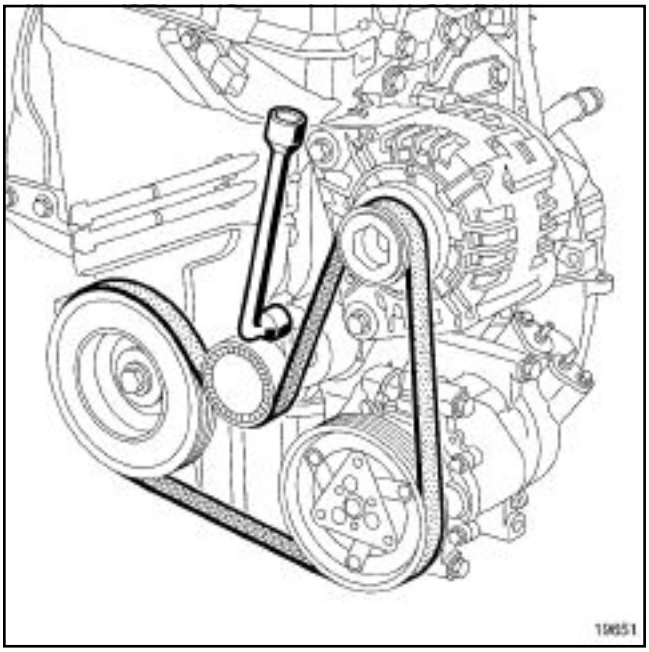

19651

Turn the accessories belt auto tensioner clockwise using a **16 mm** spanner.

Refit the crankshaft accessories belt.

Rotate the crankshaft twice to position the accessories belt correctly.

Special tooling required	
Mot. 792-03	Engine support plate for Desvil engine stand
Mot. 1638	Accessories belt tension tool. For engines fitted with a mechanical tensioning roller.
Mot. 1505	Belt tension setting tool (frequency meter)
Mot. 1715	Belt tension checking tool (frequency indicator).
Mot. 1723	Engine support for DESVIL engine support stand.
Mot. 582-01	Flywheel locking tool.
Mot. 1677	Flywheel locking tool.
Emb. 1780	Set of clutch disc centring mandrels.

Tightening torques ▽	
coolant pump inlet pipe mounting bolt	**22 ± 2.2 Nm**
multifunction support mounting bolts (1 to 6 or 1 to 5)	**44 ± 4.4 Nm**
multifunction support mounting bolt (7)	**21 ± 2.1 Nm**
the power-assisted steering pump or dummy pulley mounting bolts	**21 ± 2.1 Nm**
the air conditioning compressor mounting bolts	**21 ± 2.1 Nm**
the alternator mounting bolts	**21 ± 2.1 Nm**
mechanical tensioning roller mounting bolts	**35 ± 3.5 Nm**
auto tensioner mounting bolt	**40 ± 4 Nm**

Tightening torques ▽	
the flywheel mounting bolts	**55 ± 5.5 Nm**
the dual-mass flywheel mounting bolts	**20 ± 2 Nm + 36° ± 6°**
clutch pressure plate mounting bolts	**M6 bolts to 14 ± 1.4 Nm and M7 bolt to 20 ± 2 Nm**

I - RECOMMENDATIONS FOR REPAIR

IMPORTANT
Wear protective gloves throughout the operation.

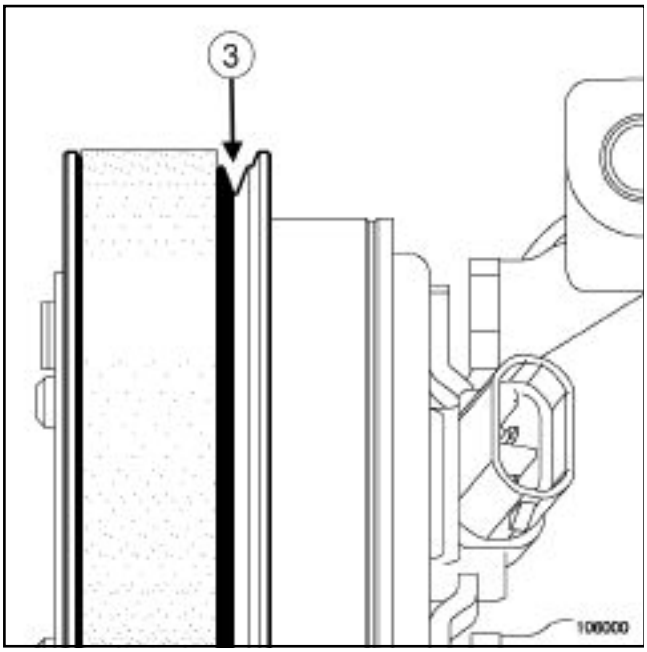

106000

WARNING

Certain accessories belts have five teeth whereas the air conditioning compressor pulley, power-assisted steering pump pulley, and alternator pulley all have six teeth. In this case, it is essential to check that the inner tooth (**3**) of the pulleys remains free when fitting the accessories belt.

Never turn the engine in the opposite direction to its normal operating direction.

Use a brush to remove any deposits from the crankshaft accessories pulley V grooves.

For engines fitted with a mechanical tensioning roller, it is essential to replace the tensioning roller mounting bolts.

II - PARTS AND CONSUMABLES FOR THE REPAIR

Parts always to be replaced

- Coolant pump inlet pipe seal,
- Flywheel mounting bolt,
- Accessories belt mechanical or auto tensioner,
- Mechanical tensioning roller mounting bolts with **M8 - 125 X20** bolts, part no. **77 03 002 059**
- Accessories belt.

Consumables

- Degreaser, part no. **77 11 224 559** .

III - ESSENTIAL EQUIPMENT

- Workshop crane,
- Load positioner,
- Brush,
- Offset wrench or tubular hexagon box spanner **16 mm** ,
- Protective gloves,
- Male torx socket,
- Torque/angle wrench,
- Torque wrench
- Cylinder head bolt tightening gauge (angular measuring type).

IV - REBUILDING THE ENGINE FOR ENGINES ATTACHED ON SIDE OF OIL FILTER

1 - This fitting operation only concerns K9K 260-270-272-700-702-704-706-710-722-750-752-790 engines.

Fit a load positioner onto the engine lifting eyes.

Remove the engine from the engine stand using a workshop hoist.

Remove the support plate **(Mot. 792-03)** from the engine.

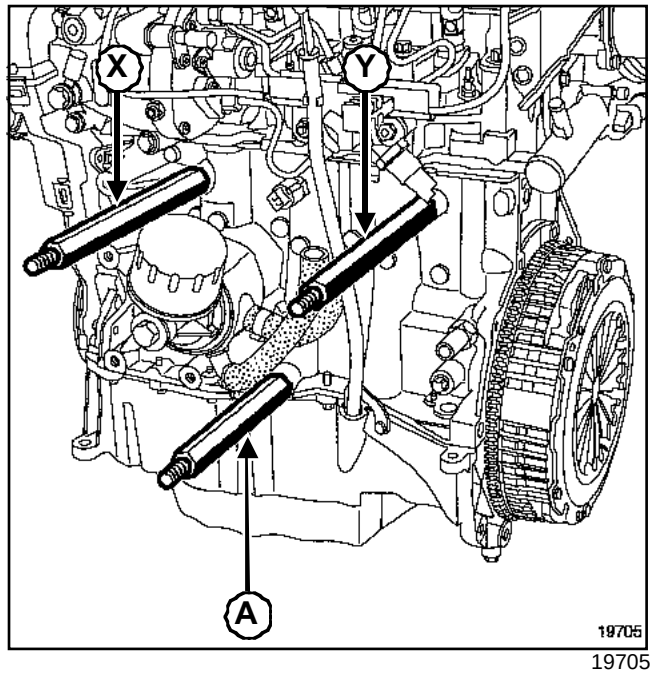

19705

Remove support studs (**A**) , (**X**) and (**Y**) from the cylinder block.

Refit a new O-ring onto the coolant pump inlet pipe.

Apply a small amount of soapy water to the coolant pump inlet pipe O-ring.

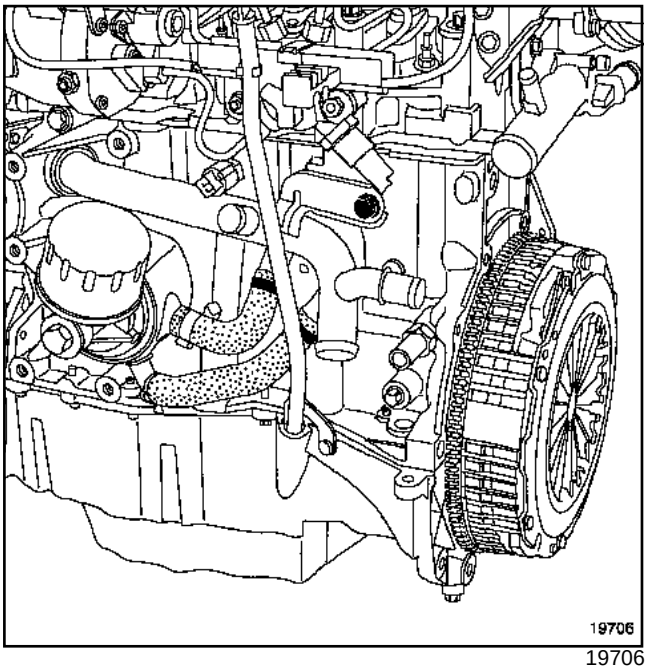

19706

Refit:

- the coolant pump inlet pipe,
- the coolant pump inlet pipe mounting bolt.

Tighten to torque the **coolant pump inlet pipe mounting bolt (22 ± 2.2 Nm)** .

Connect the hoses to the coolant pump inlet pipe.

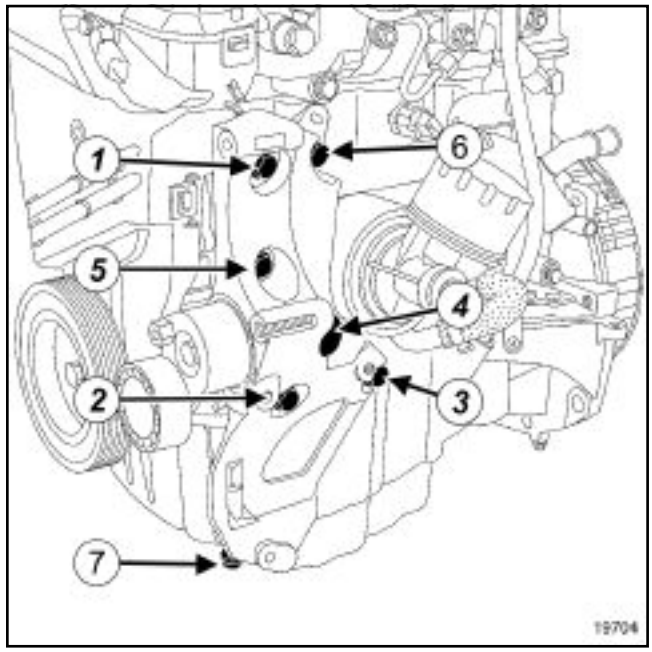

19704

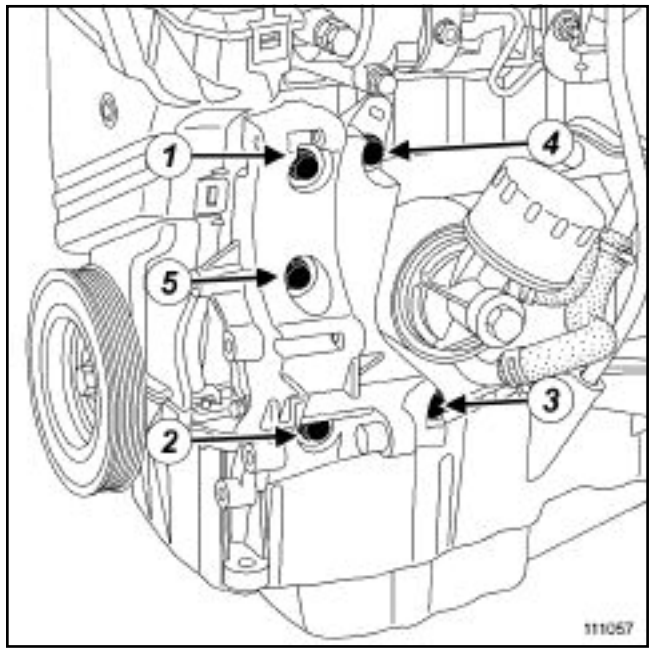

111057

Refit:

- the multifunction support,
- the multifunction support mounting bolts.

Tighten to torque and in order the **multifunction support mounting bolts (1 to 6 or 1 to 5) (44 ± 4.4 Nm)**

Tighten to torque the **multifunction support mounting bolt (7) (21 ± 2.1 Nm)** .

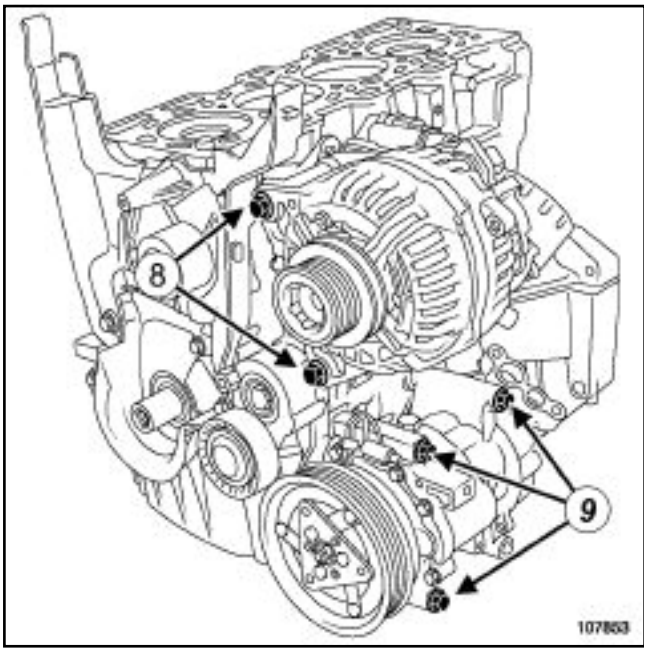

107853

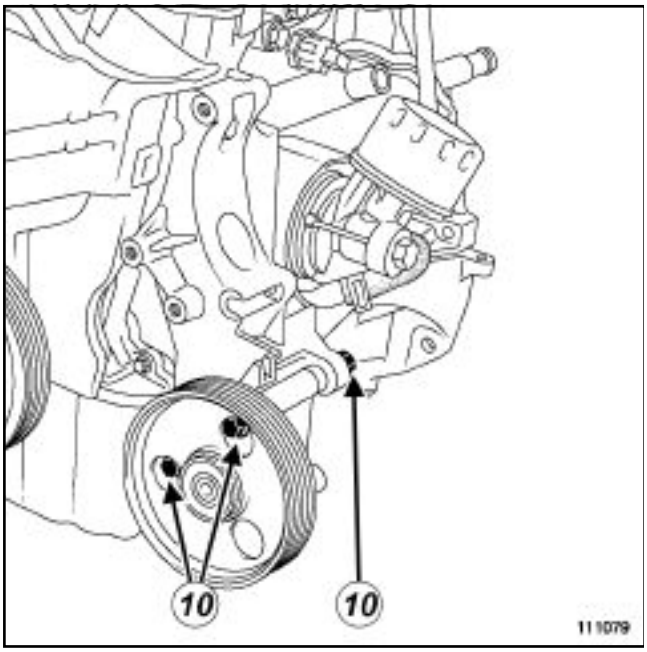

111079

Refit:

- the power-assisted steering pump or dummy pulley,
- the power-assisted steering pump or dummy pulley mounting bolts (**10**) ,
- the air conditioning compressor (if fitted to the vehicle),
- the air conditioning compressor mounting bolts (**9**) ,
- the alternator,
- the alternator mounting bolts (**8**) .

Tighten to torque:

- **the power-assisted steering pump or dummy pulley mounting bolts (21 ± 2.1 Nm)** ,
- **the air conditioning compressor mounting bolts (21 ± 2.1 Nm)** ,
- **the alternator mounting bolts (21 ± 2.1 Nm)** .

2 - Refitting the accessories belt for engines without air conditioning

Use a brush to remove any deposits from the crankshaft accessories pulley V grooves.

Refit:

- the tensioning roller,
- the new tensioning roller mounting bolts.

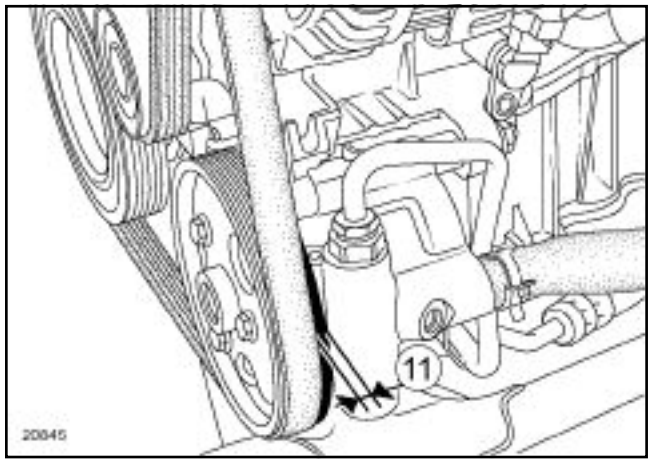

20845

It is essential to leave one inner tooth (**11**) of the pulleys free for engines fitted with a belt with five teeth for pulleys with six teeth.

Refit the accessories belt.

Check that the two mechanical tensioning roller bolts are not overtightened.

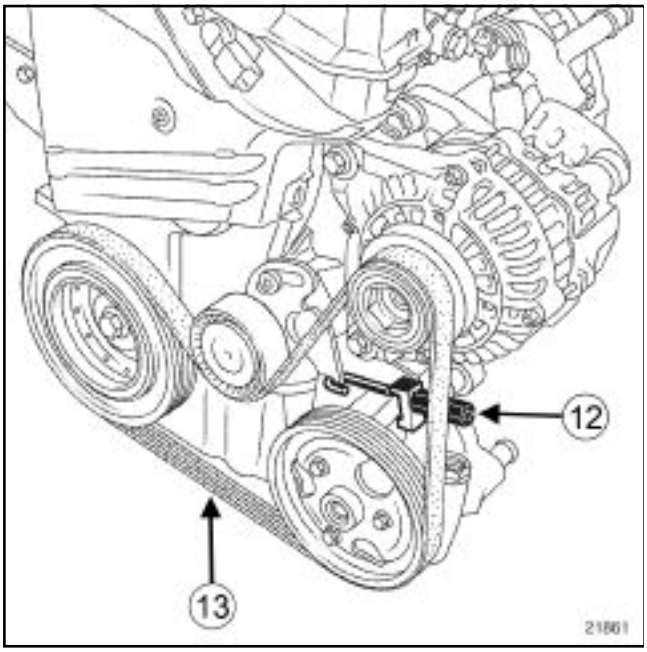

21861

Fit the **(Mot. 1638)** into the tensioning roller notch (as indicated in the diagram).

Put the accessories belt under tension using the **(Mot. 1638)** by tightening nut (**12**) .

Check the accessories belt tension at (**13**) using the **(Mot. 1505)** or **(Mot. 1715)** .

The accessories belt tension must be between **223 to 245 Hz** .

It is essential to turn the engine through two revolutions to position the accessories belt correctly.

Check that the accessories belt tension is between **223 and 245 Hz** at measuring point ***(13)*** .

Adjust the accessories belt tension if necessary.

Tighten to torque the **mechanical tensioning roller mounting bolts (35 ± 3.5 Nm)** .

3 - Refitting the accessories belt for engines with air conditioning

Use a brush to remove any deposits from the crankshaft accessories pulley V grooves.

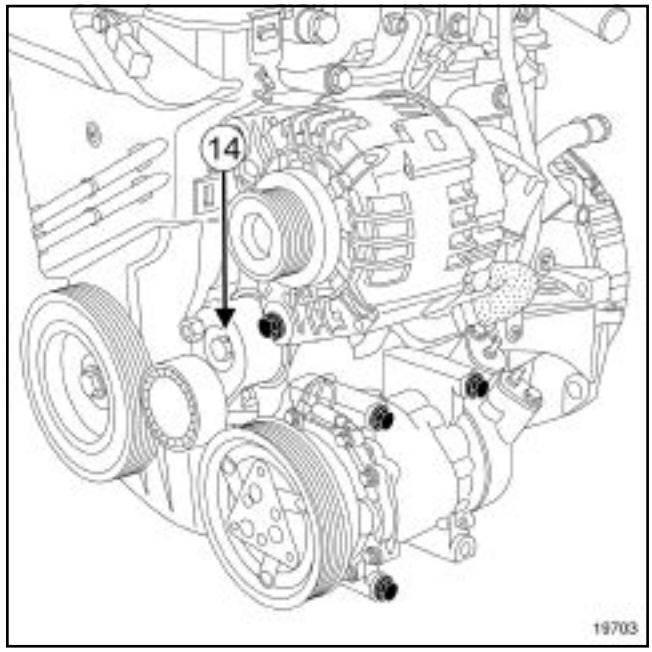

19703

Refit:

- the auto tensioner,
- the auto tensioner mounting bolt (**14**) .

Tighten to torque the **auto tensioner mounting bolt (40 ± 4 Nm)** .

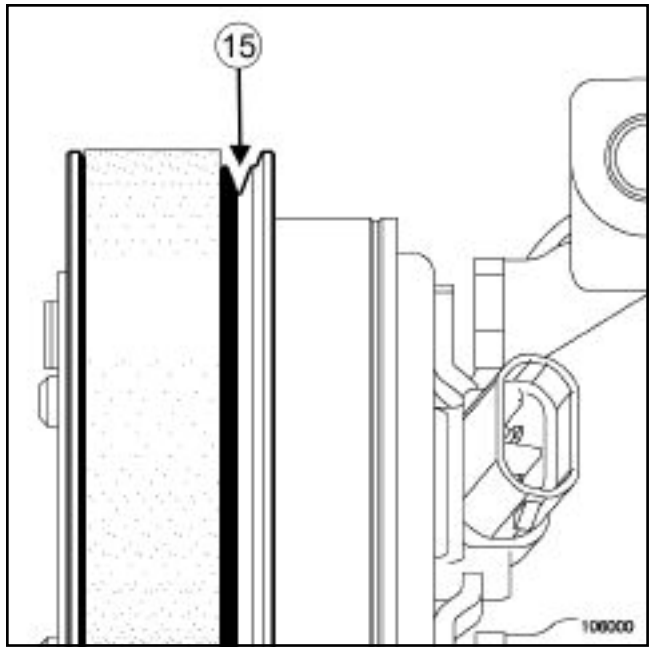

106000

It is essential to leave one inner tooth (**15**) of the pulleys free for engines fitted with a belt with five teeth for pulleys with six teeth.

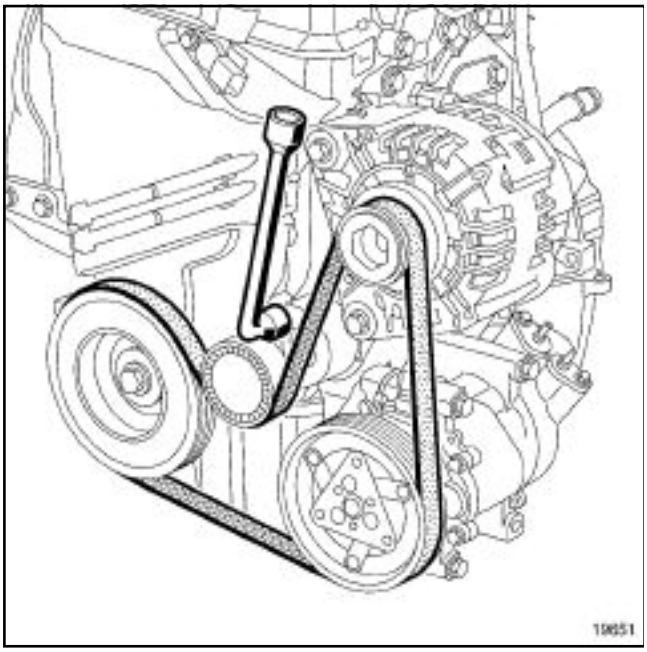

19651

Turn the accessories belt auto tensioner clockwise using a **16 mm** spanner.

Refit the crankshaft accessories belt.

Rotate the crankshaft twice to position the accessories belt correctly.

V - REBUILDING THE ENGINE ATTACHED TO THE FLYWHEEL END

This fitting operation concerns all K9K engines

Fit a load positioner onto the engine lifting eyes.

Remove the engine from the engine stand using a workshop hoist.

Remove:

- the engine from the support plate **(Mot. 1723)** ,
- the studs from the cylinder block.

Note:

For engines which have a starter located on the exhaust side, the flywheel must only be refitted after the engine has been removed from the engine stand.

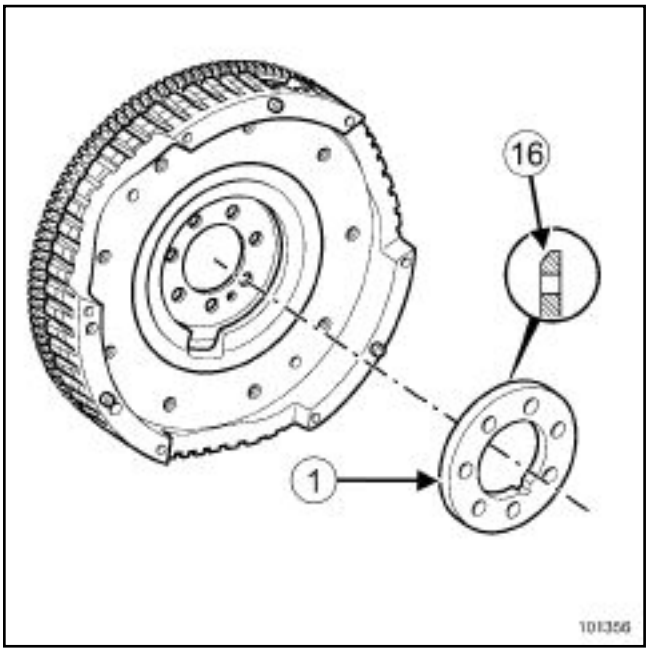

101356

Note:

Certain flywheels have a shim (1) . It is essential to position the shim chamfer (16) on the flywheel end .

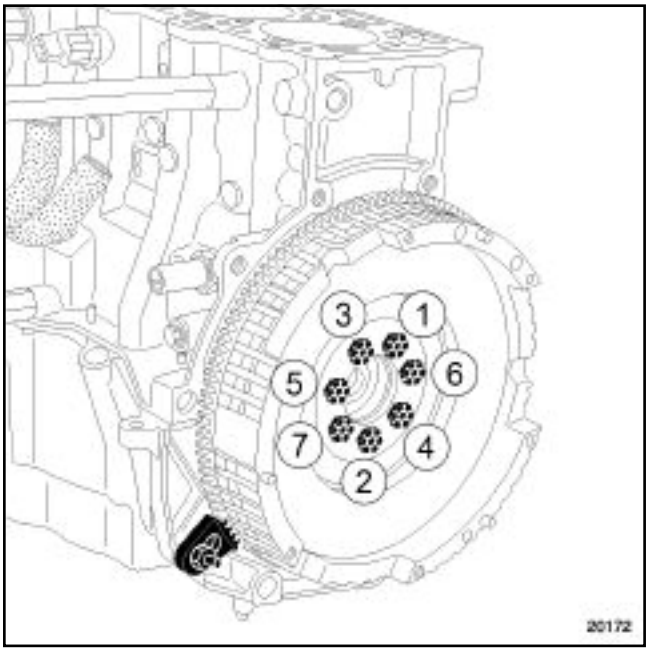

20172

Refit:

- the flywheel,
- the new flywheel mounting bolts,
- the engine flywheel locking tool **(Mot. 582-01)** or **(Mot. 1677)** .

Tighten to torque and in order:

- **the flywheel mounting bolts (55 ± 5.5 Nm)** ,
- **the dual-mass flywheel mounting bolts (20 ± 2 Nm + 36° ± 6°)** .

Degrease the flywheel friction surface using degreaser.

Refit the friction plate (orientating it correctly).

Centre the friction plate using the **(Emb. 1780)** .

Degrease the clutch pressure plate friction surface using degreaser.

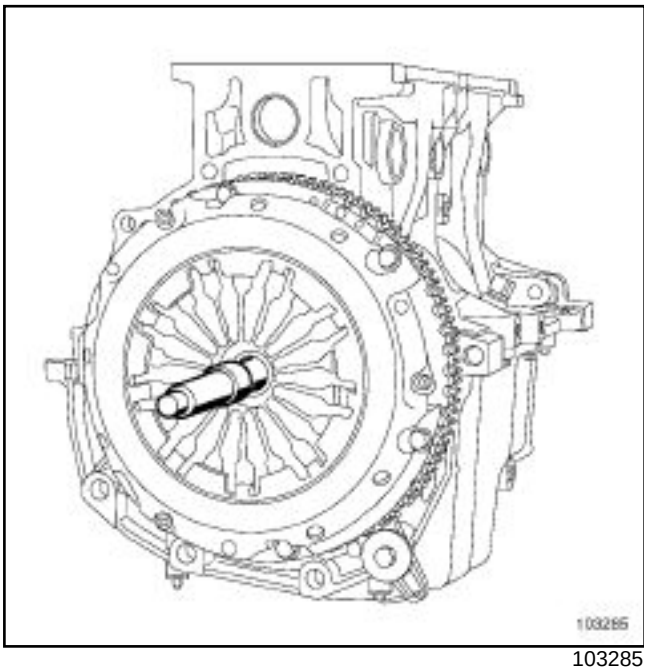

103285

Refit:

- the clutch pressure plate,
- the clutch pressure plate mounting bolts.

Gradually tighten the clutch pressure plate mounting bolts.

Tighten to torque the **clutch pressure plate mounting bolts (M6 bolts to 14 ± 1.4 Nm and M7 bolt to 20 ± 2 Nm)** .

Remove the engine flywheel locking tool **(Mot. 582-01)** or **(Mot. 1677)** .

Timing belt: Removal

K9K, and 274 or 276 or 714 or 716 or 718 or 766 or 768

Special tooling required	
Mot. 1489	TDC locating pin.
Mot. 1430	Set of 5 crankshaft and camshaft pulley timing pins.

I - RECOMMENDATIONS FOR REPAIR

IMPORTANT
Wear protective gloves during every operation.

WARNING
Never turn the engine in the opposite direction to its normal operating direction.

Do not run the engine without the accessories belt so as not to damage the crankshaft accessories pulley.

II - ESSENTIAL EQUIPMENT

- Protective gloves,
- Large screwdriver,
- Allen key (**6 mm**),
- Torx socket (**14**).

III - REMOVAL

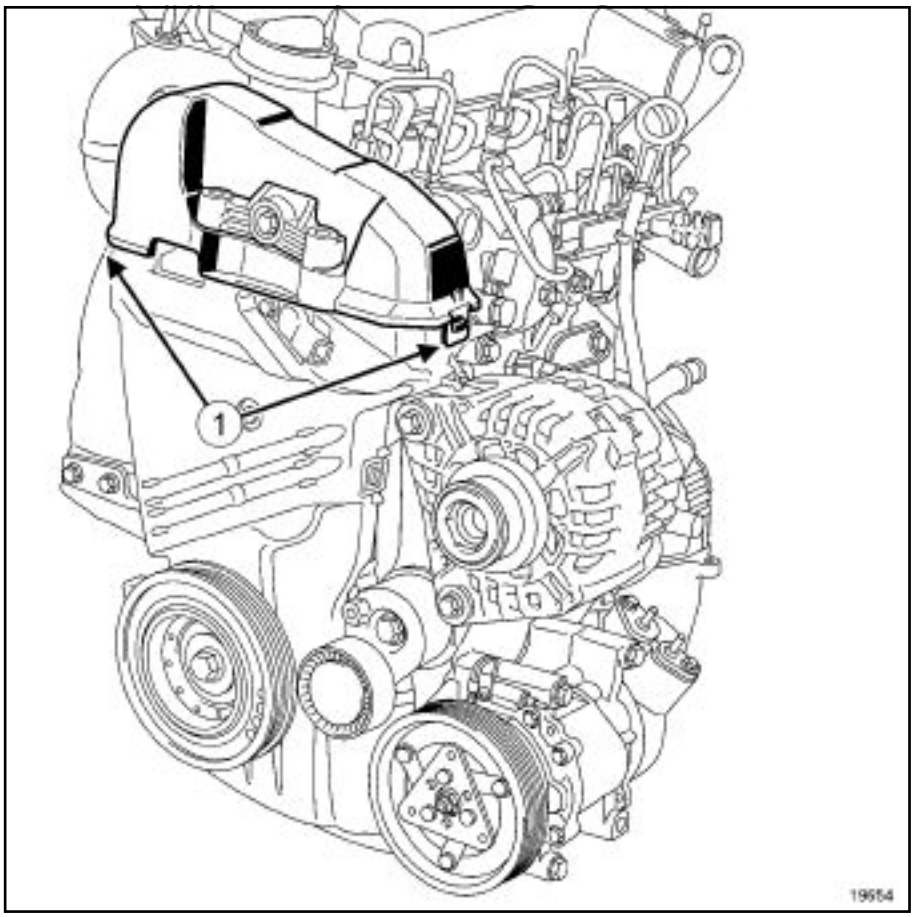

19654

Remove the upper timing cover by unclipping both tabs (**1**) .

K9K, and 274 or 276 or 714 or 716 or 718 or 766 or 768

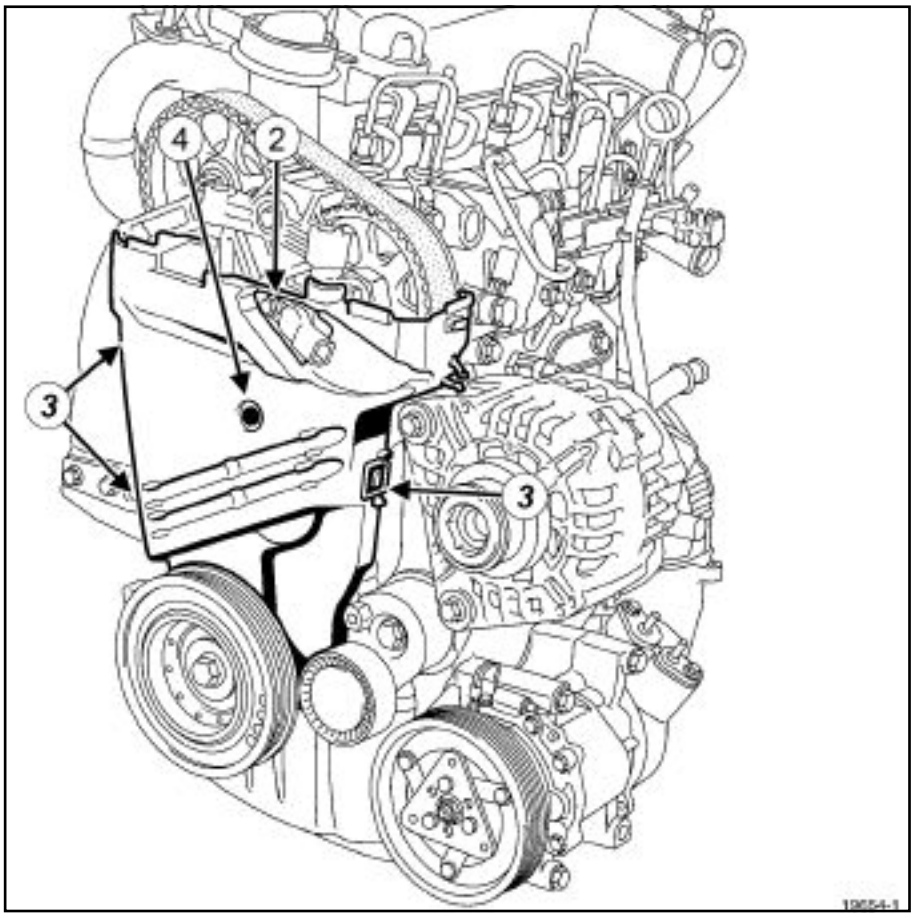

19654-1

Remove:

- the high-pressure pump position sensor (**2**) ,
- the plastic bolt (**4**) .

Unclip the three tabs (**3**) .

Remove the lower timing cover.

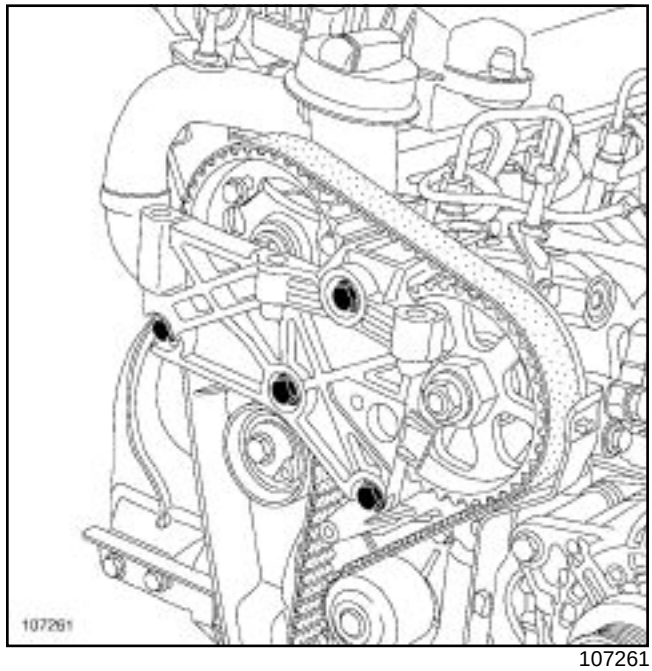
107261

Remove the cylinder head suspended mounting.

K9K, and 274 or 276 or 714 or 716 or 718 or 766 or 768

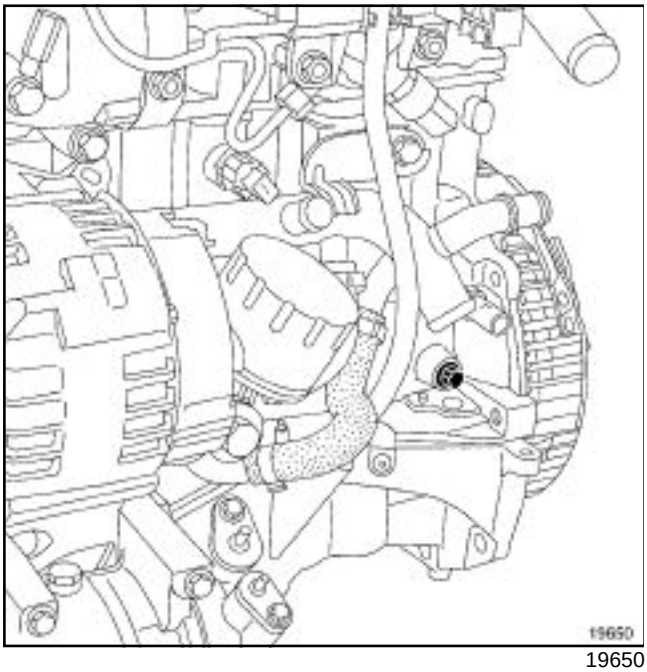

19650

Remove the TDC setting pin plug using a female torx socket (**14**).

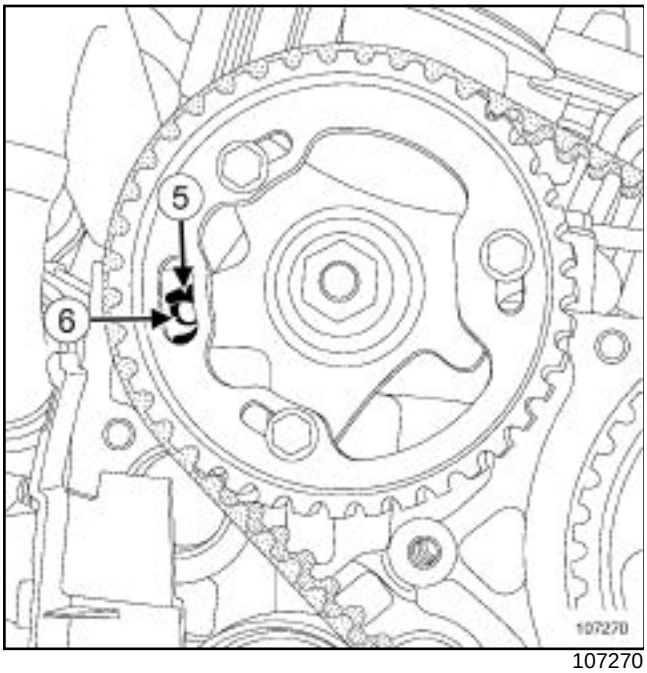

107270

Turn the crankshaft to position the camshaft pulley hole (**5**) almost opposite the cylinder head hole (**6**) .

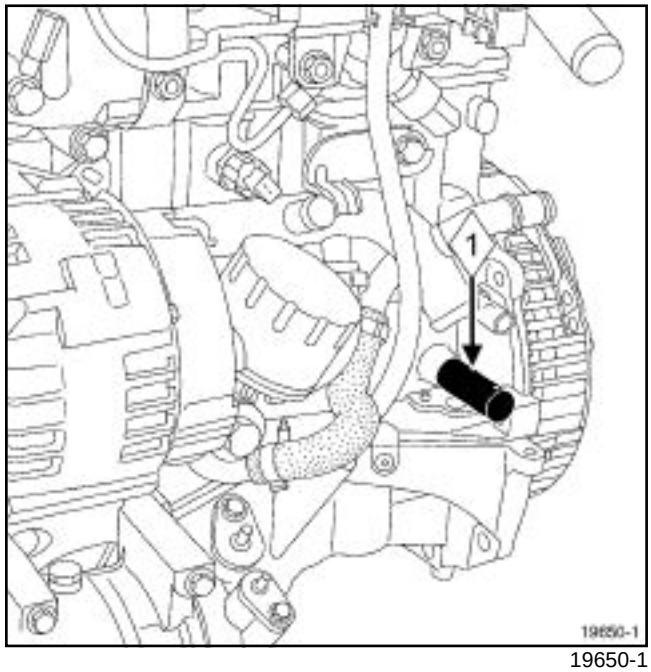

19650-1

Screw in the TDC setting pin (**1**) **(Mot. 1489)** .

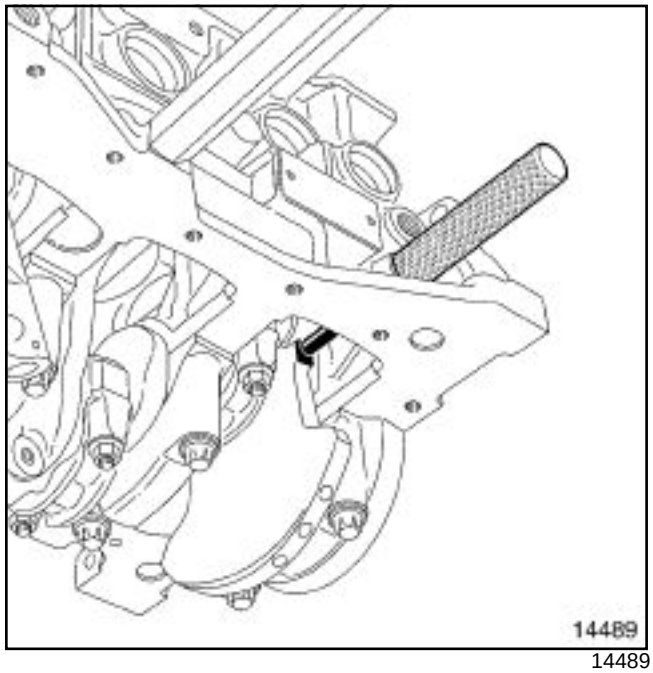

14489

Turn the crankshaft clockwise (timing end) smoothly until the crankshaft comes into contact with the TDC setting pin.

K9K, and 274 or 276 or 714 or 716 or 718 or 766 or 768

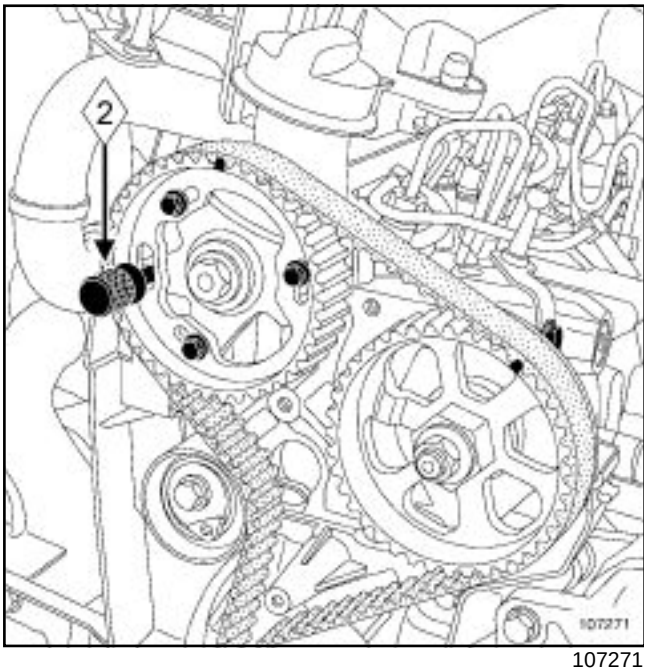

107271

Engage the pin **(Mot. 1430)** (**2**) in the camshaft pulley and cylinder head holes.

Remove:

- the set of 5 timing pins for the camshaft and crankshaft pulleys **(Mot. 1430)** ,
- the TDC setting pin **(Mot. 1489)** .

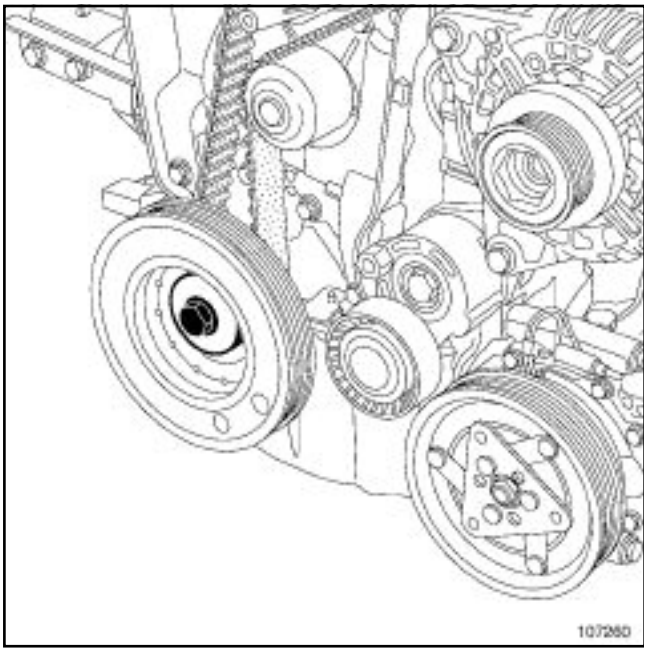

107260

Remove the crankshaft accessories pulley, locking the flywheel with a screwdriver.

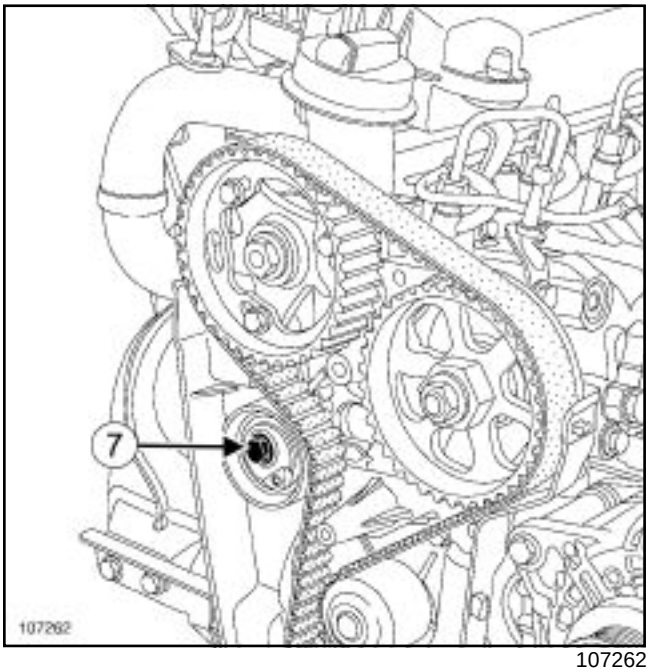

107262

Undo the tensioning roller bolt (**7**) .

Loosen the timing tensioning roller by turning the eccentric cam using a **6 mm** Allen key.

Remove:

- the timing belt,
- the timing tensioning roller.

Timing belt: Removal

K9K, and 260 or 270 or 272 or 700 or 702 or 704 or 706 or 710 or 712 or 722 or 724 or 728 or 729 or 750 or 752 or 760 or 762 or 790

Special tooling required	
Mot. 1489	TDC locating pin.
Mot. 1430	Set of 5 crankshaft and camshaft pulley timing pins.

I - RECOMMENDATIONS FOR REPAIR

IMPORTANT
Wear protective gloves during every operation.

WARNING
Never turn the engine in the opposite direction to its normal operating direction.

Do not run the engine without the accessories belt so as not to damage the crankshaft accessories pulley.

II - ESSENTIAL EQUIPMENT

- Protective gloves,
- Large screwdriver,
- Allen key (**6 mm**),
- Torx socket (**14**).

III - REMOVAL

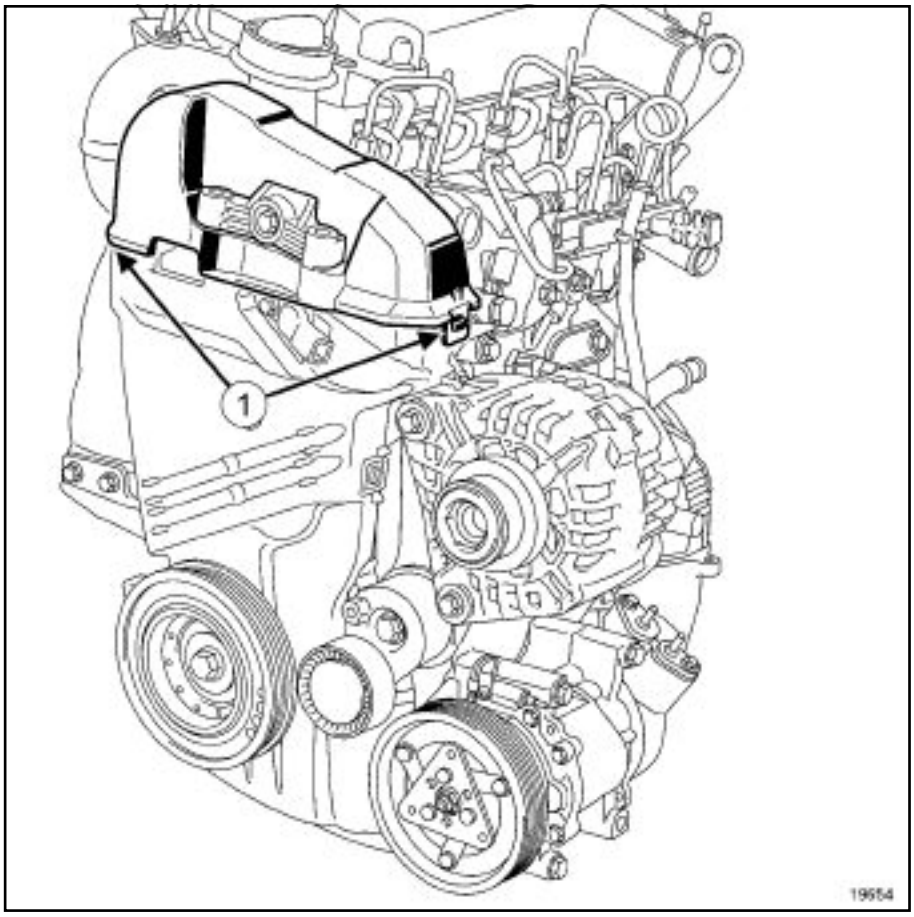

19654

Remove the upper timing cover by unclipping both tabs (**1**) .

Timing belt: Removal

K9K, and 260 or 270 or 272 or 700 or 702 or 704 or 706 or 710 or 712 or 722 or 724 or 728 or 729 or 750 or 752 or 760 or 762 or 790

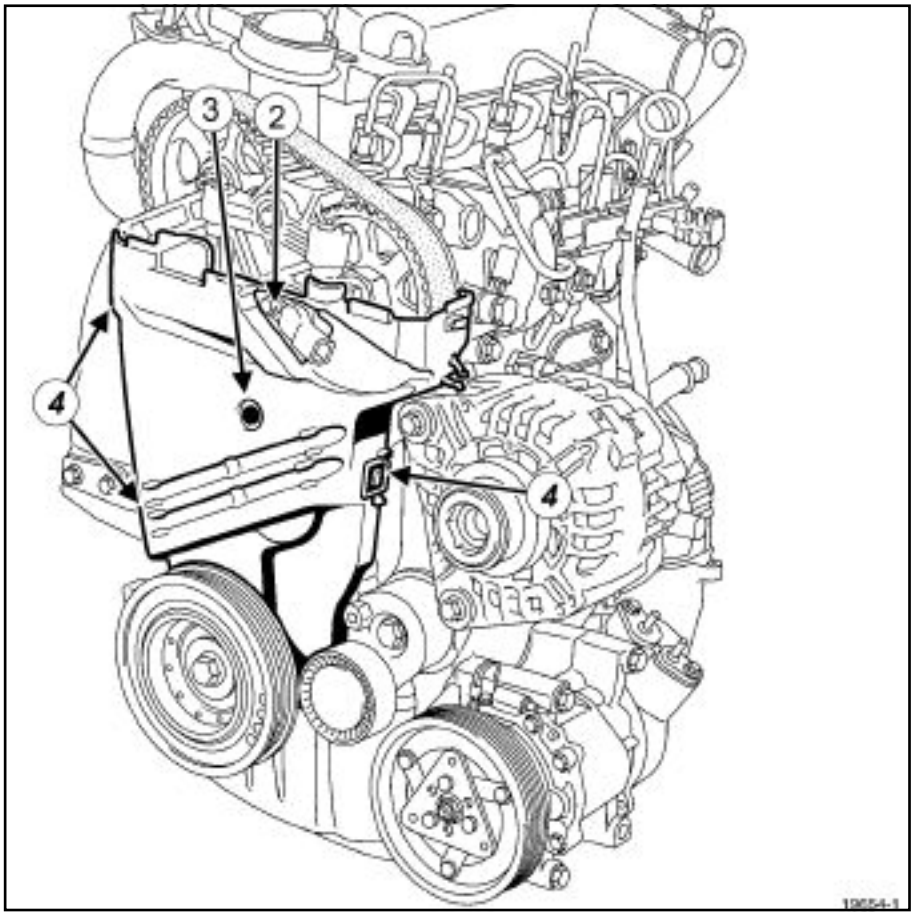

19654-1

Remove:

- the high-pressure pump position sensor (**2**) ,
- the plastic bolt (**3**) .

Unclip the three tabs (**4**) .

Remove the lower timing cover.

K9K, and 260 or 270 or 272 or 700 or 702 or 704 or 706 or 710 or 712 or 722 or 724 or 728 or 729 or 750 or 752 or 760 or 762 or 790

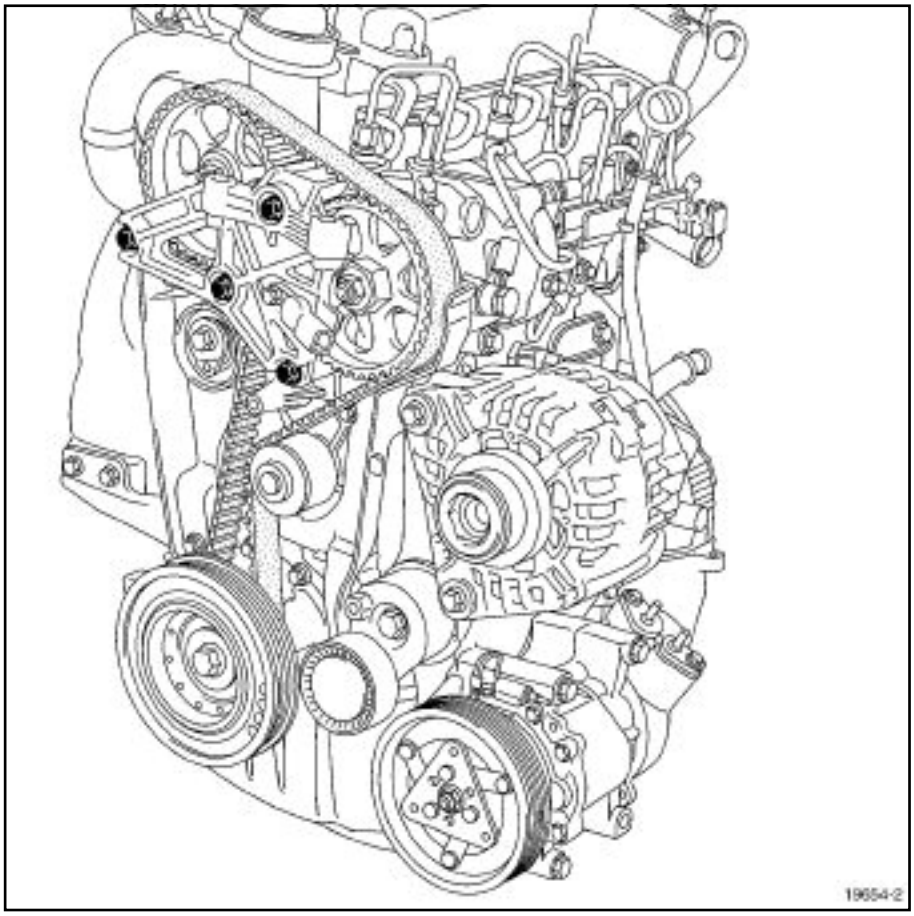

19654-2

Remove the cylinder head suspended mounting.

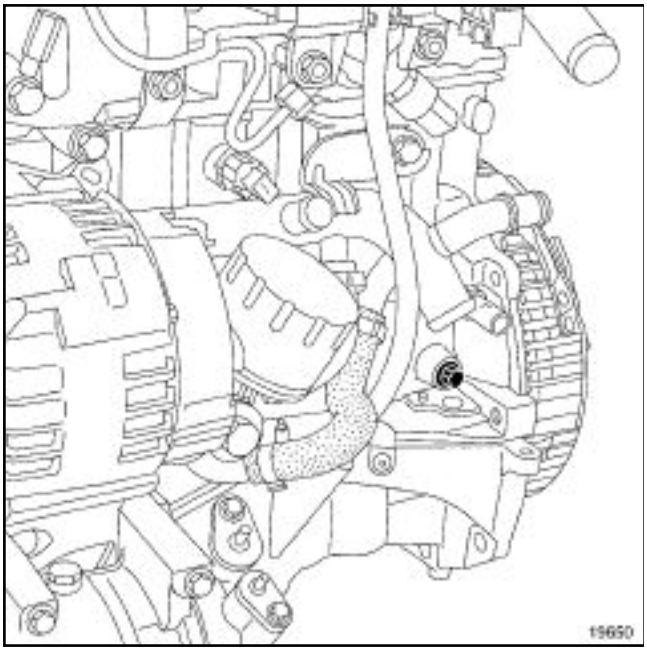

19650

Remove the TDC pin plug using a female torx socket (**14**).

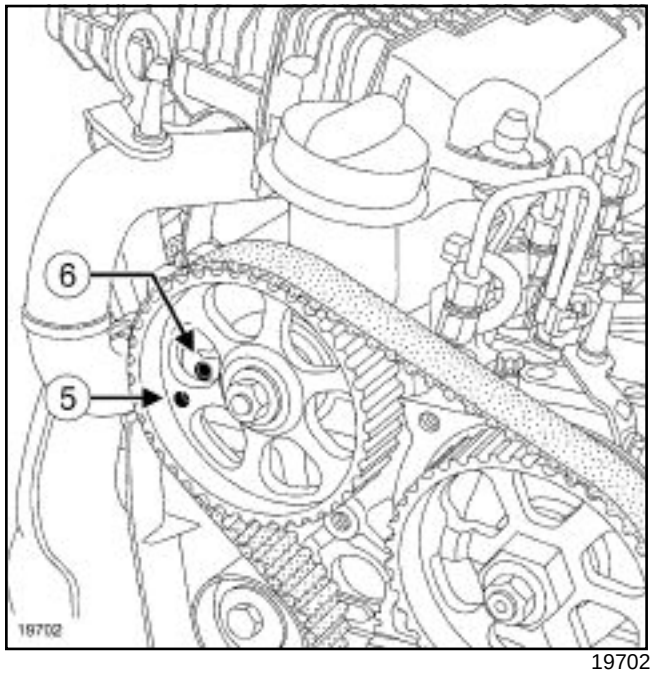

19702

Turn the crankshaft to position the camshaft pulley hole (**5**) almost opposite the cylinder head hole (**6**) .

K9K, and 260 or 270 or 272 or 700 or 702 or 704 or 706 or 710 or 712 or 722 or 724 or 728 or 729 or 750 or 752 or 760 or 762 or 790

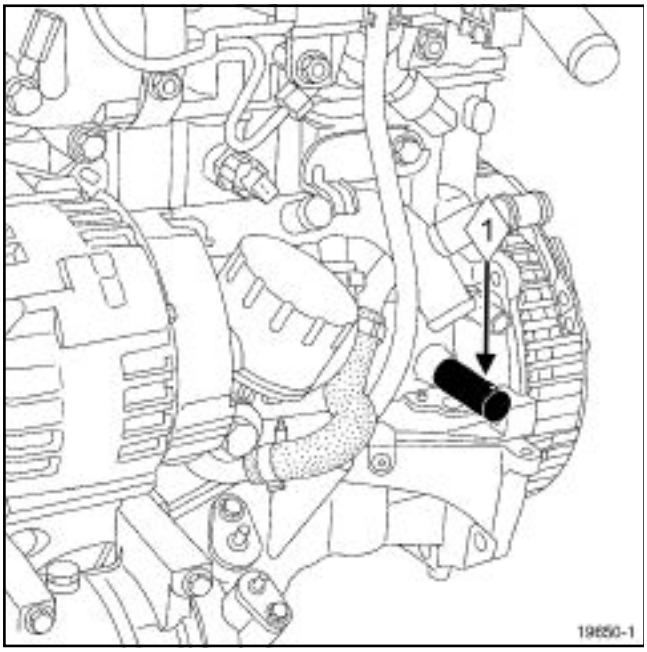

19650-1

Screw in the TDC setting pin **(Mot. 1489)** (**1**) .

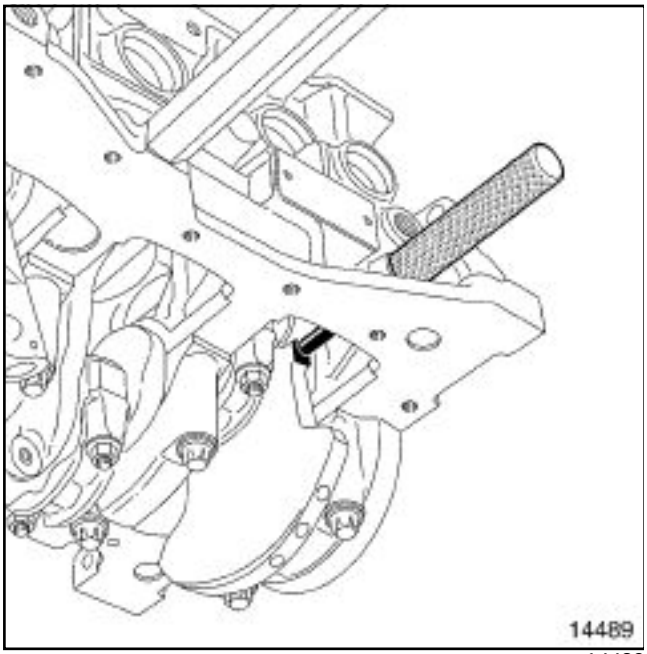

14489

Turn the crankshaft clockwise (timing end) smoothly until the crankshaft comes into contact with the TDC setting pin.

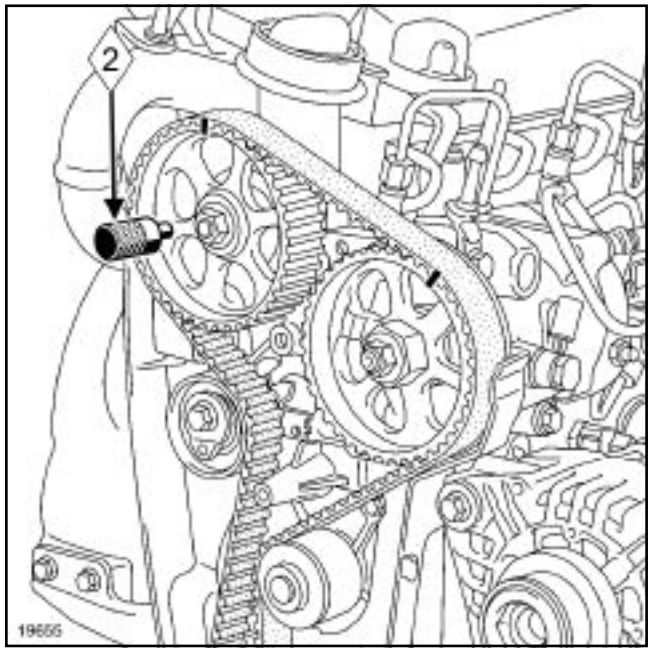

19655

Engage the pin **(Mot. 1430)** (**2**) in the camshaft pulley and cylinder head holes.

Remove:

- the set of 5 timing pins for the camshaft and crankshaft pulleys **(Mot. 1430)** ,
- the TDC setting pin **(Mot. 1489)**

Timing belt: Removal

K9K, and 260 or 270 or 272 or 700 or 702 or 704 or 706 or 710 or 712 or 722 or 724 or 728 or 729 or 750 or 752 or 760 or 762 or 790

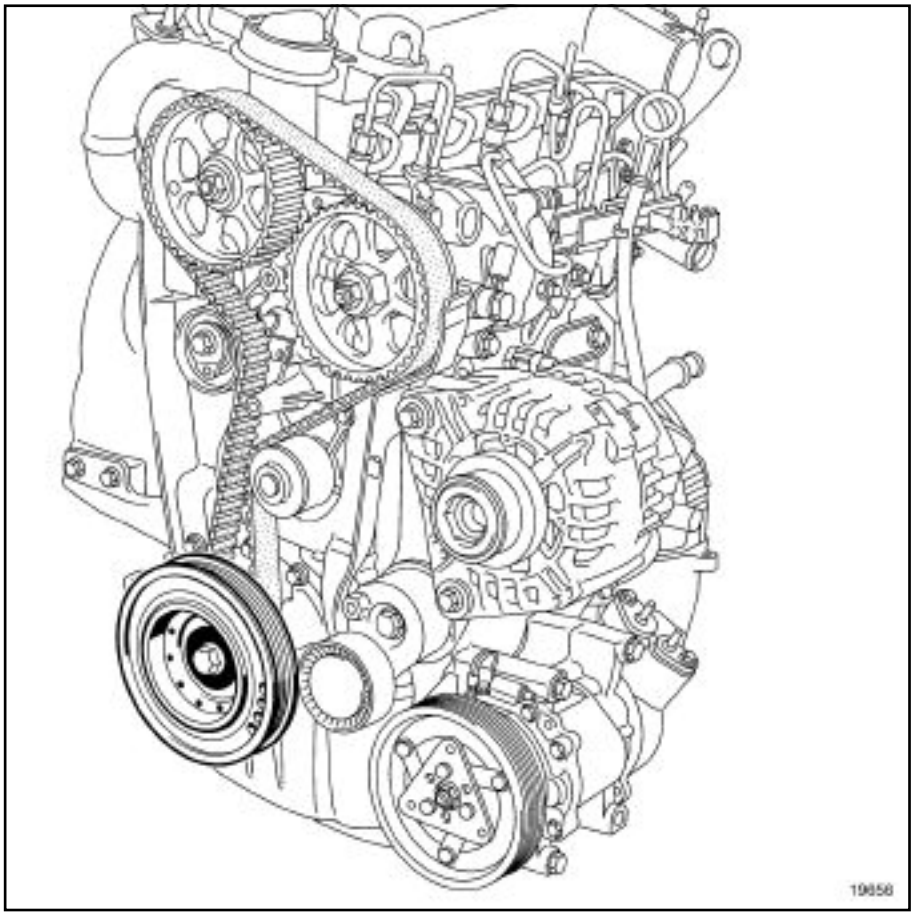

19656

Remove the crankshaft accessories pulley by locking the flywheel with a large screwdriver.

Timing belt: Removal

K9K, and 260 or 270 or 272 or 700 or 702 or 704 or 706 or 710 or 712 or 722 or 724 or 728 or 729 or 750 or 752 or 760 or 762 or 790

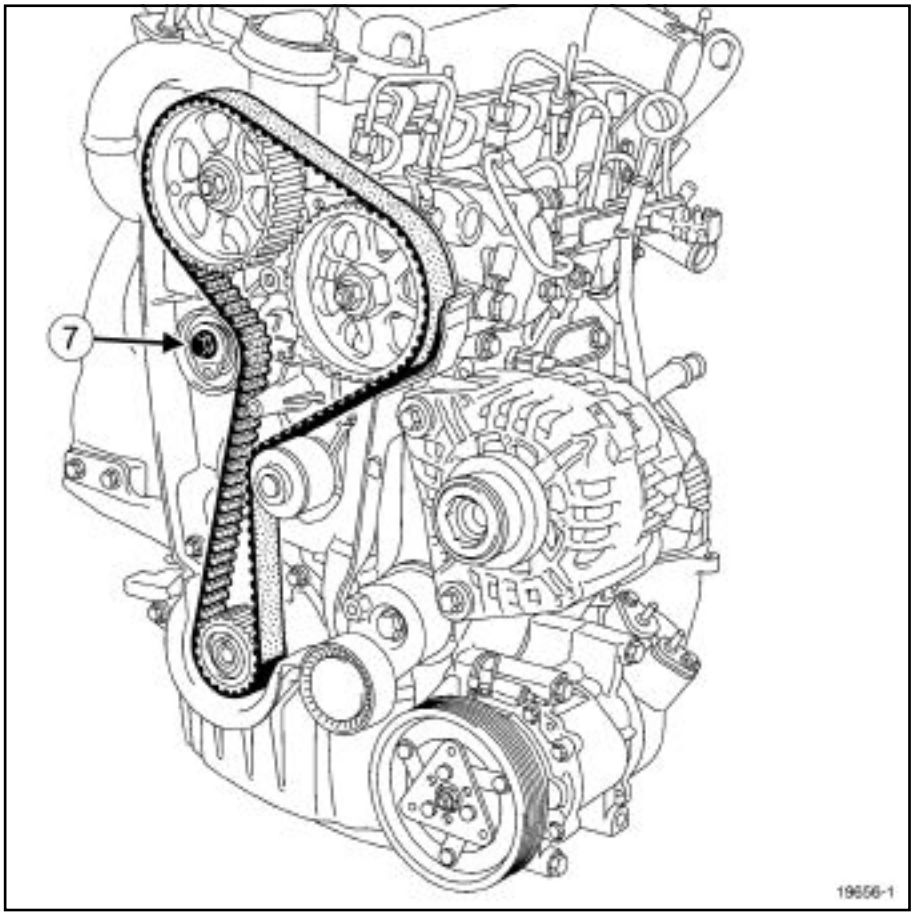

19656-1

Undo the tensioning roller bolt (**7**) .

Loosen the timing tensioning roller by turning the eccentric cam using a **6 mm** Allen key.

Remove:

- the timing belt taking care not to let the crankshaft timing sprocket fall out,
- the timing tensioning roller.

Timing belt: Removal

K9K, and 732 or 764

Special tooling required	
Mot. 1489	TDC locating pin.
Mot. 1430	Set of 5 crankshaft and camshaft pulley timing pins.

I - RECOMMENDATIONS FOR REPAIR

IMPORTANT
Wear protective gloves during every operation.

WARNING
Never turn the engine in the opposite direction to its normal operating direction.

Do not run the engine without the accessories belt so as not to damage the crankshaft accessories pulley.

II - EQUIPMENT REQUIRED

- Protective gloves,
- Large screwdriver,
- Allen key (**6 mm**),
- Torx socket (**14**).

III - REMOVAL

K9K, and 732

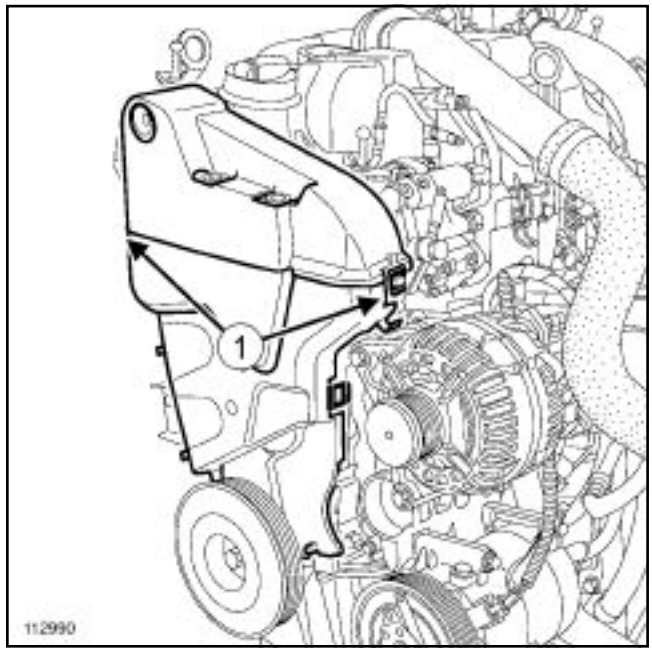

112990

Remove the upper timing cover by unclipping both tabs (**1**) .

K9K, and 732 or 764

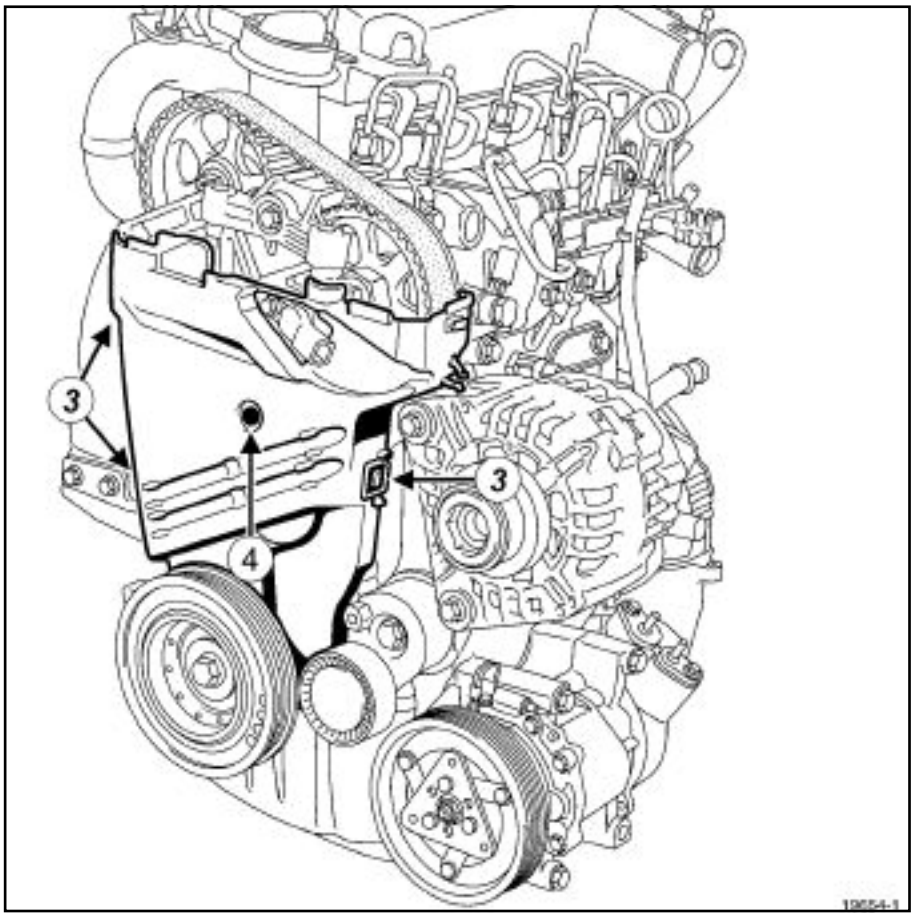

19654-1

Remove the plastic bolt (**4**) .

Unclip the three tabs (**3**) .

Remove the lower timing cover.

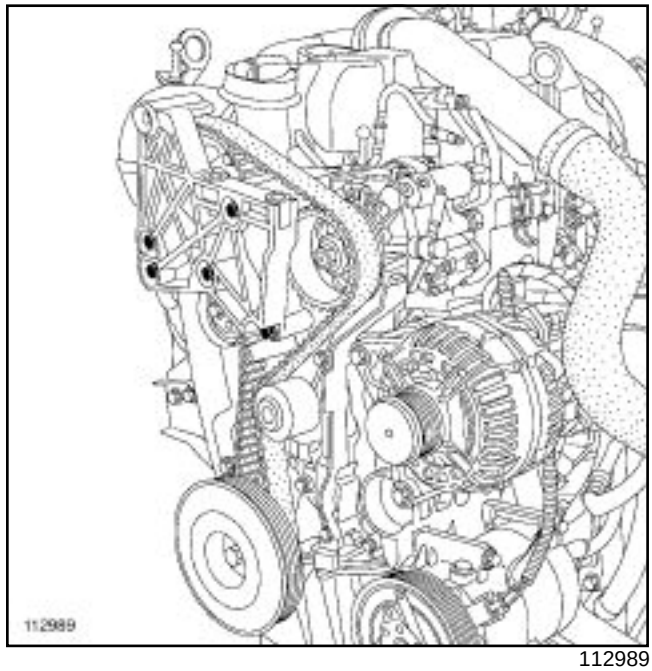

112989

Remove the cylinder head suspended mounting.

K9K, and 732 or 764

K9K, and 764

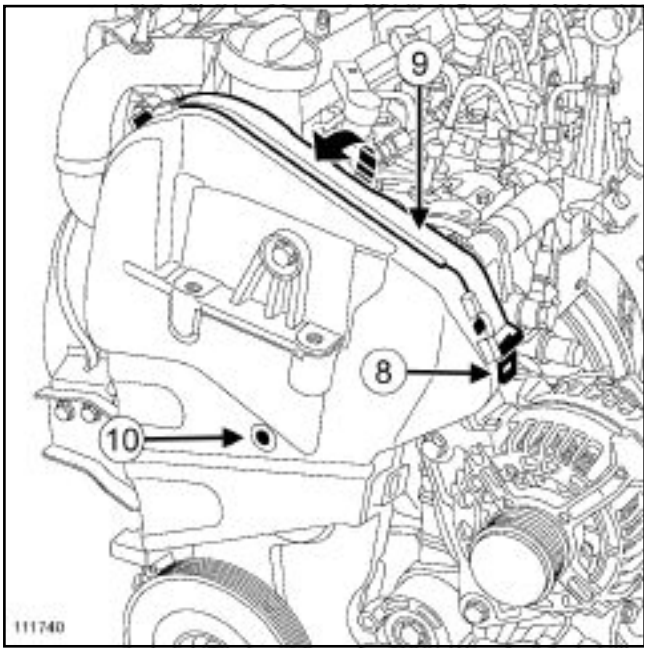

111740

Unclip the tab (**8**) .

Turn the timing cover (**9**) in the direction of the arrow.

Remove the plastic bolt (**10**) .

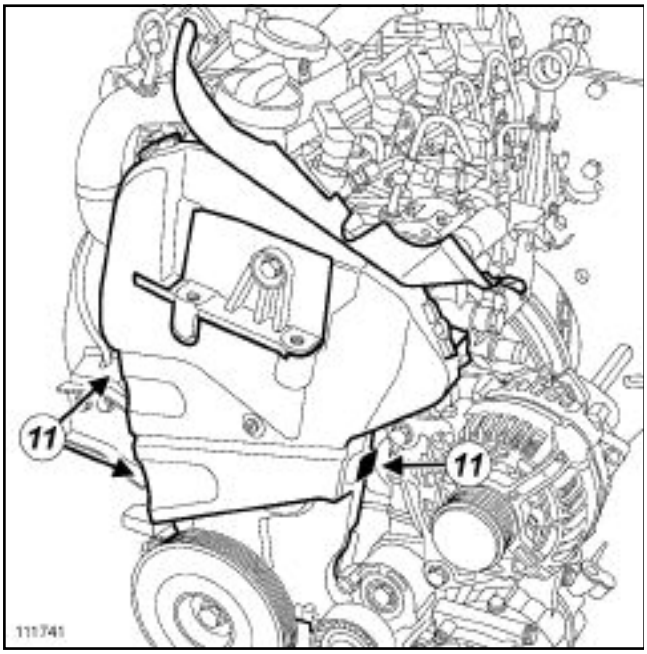

111741

Unclip the three tabs (**11**) .

Remove the timing cover.

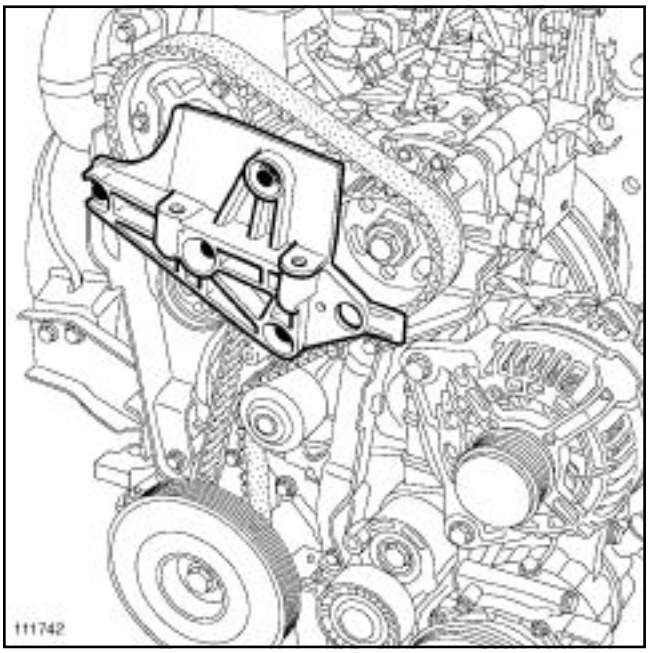

111742

Remove the cylinder head suspended mounting.

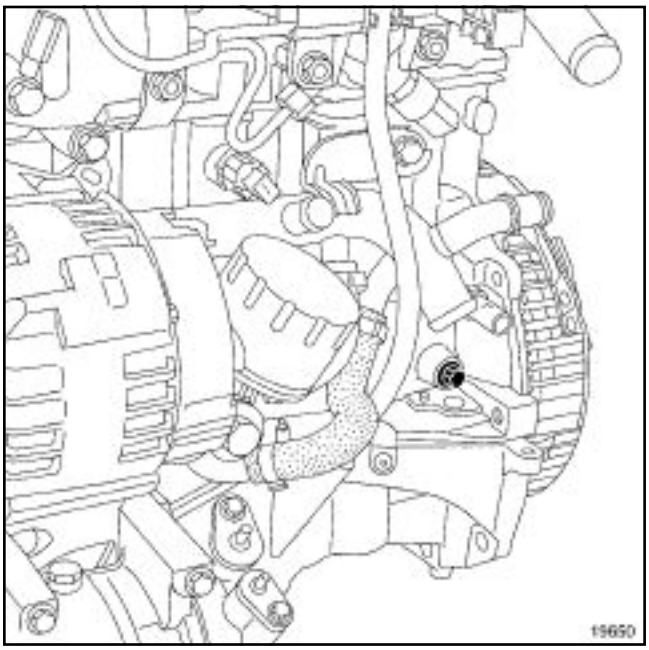

19650

Remove the TDC setting pin plug using a female torx socket (**14**).

K9K, and 732 or 764

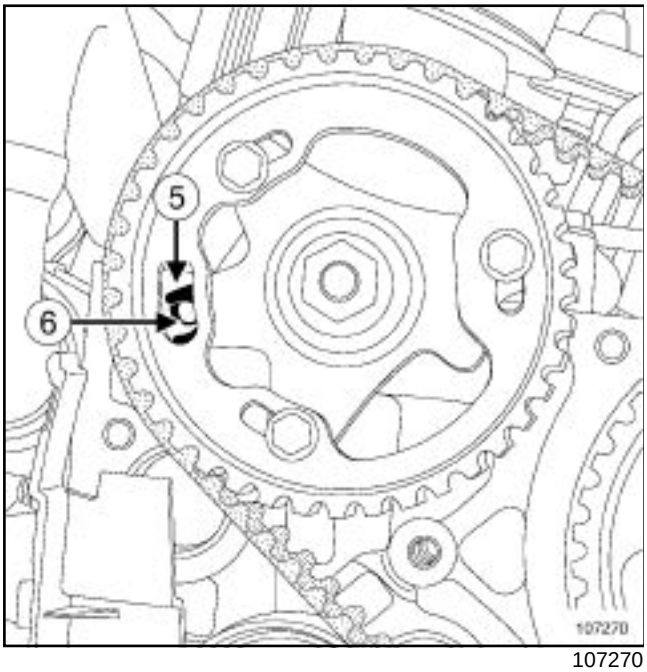

107270

Turn the crankshaft to position the camshaft pulley hole (**5**) almost opposite the cylinder head hole (**6**) .

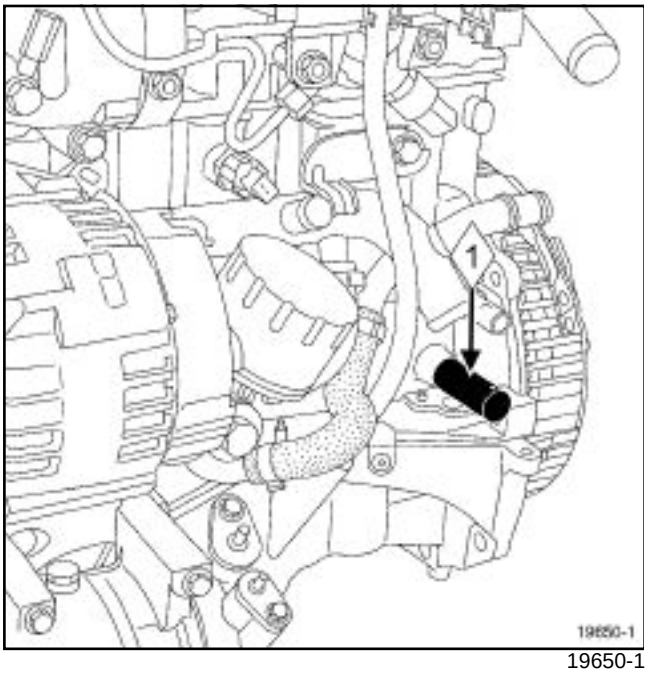

19650-1

Screw in the TDC setting pin (**1**) **(Mot. 1489)** .

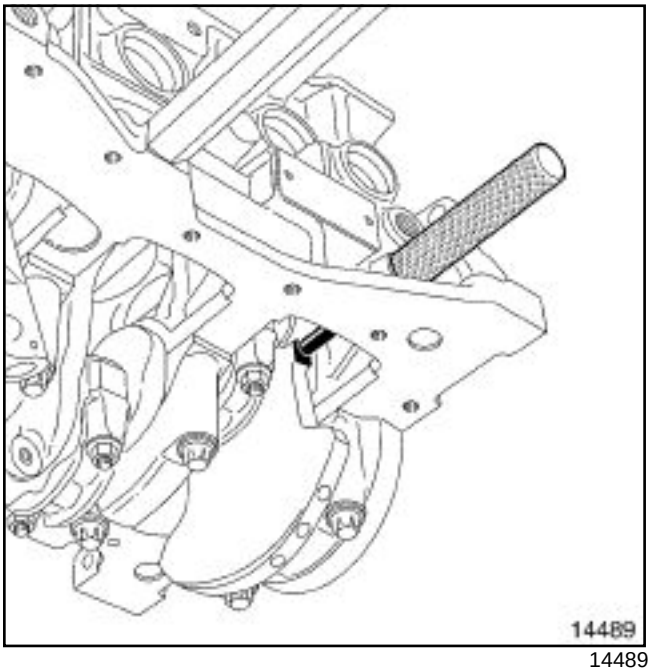

14489

Turn the crankshaft clockwise (timing end) smoothly until the crankshaft comes into contact with the TDC setting pin.

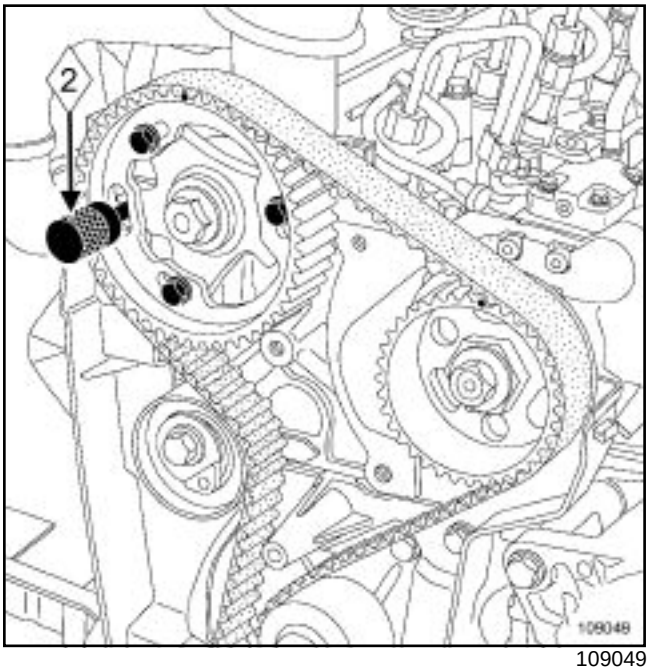

109049

Engage the pin **(Mot. 1430)** (**2**) in the camshaft pulley and cylinder head holes.

Remove:

- the set of 5 pins for the camshaft and craknshaft pulleys **(Mot. 1430)** ,

- the TDC setting pin **(Mot. 1489)** .

K9K, and 732 or 764

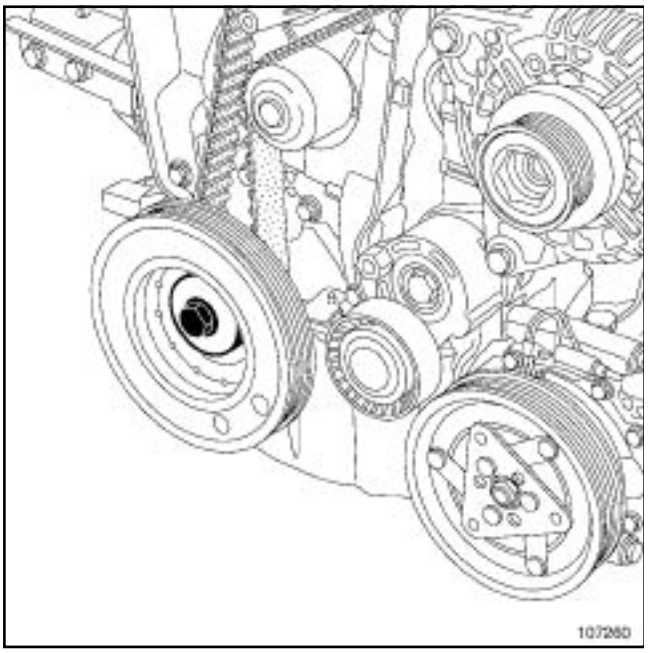

107260

Remove the crankshaft accessories pulley, locking the flywheel with a screwdriver.

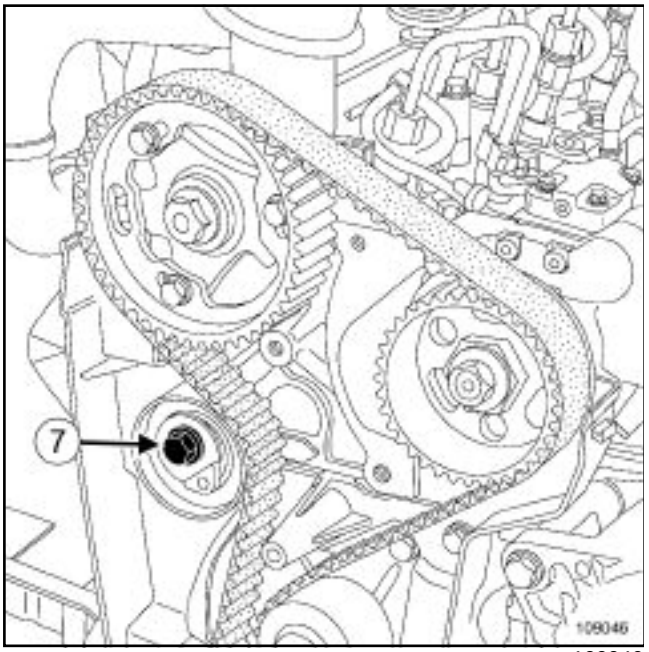

109046

Undo the tensioning roller bolt (**7**) .

Loosen the timing tensioning roller by turning the eccentric cam using a **6 mm** Allen key

Remove:

- the timing belt,

- the timing tensioning roller.

There are three distinct tension procedures that must be observed, according to the engine family.

Some engines require:

- a pretensioning torque to be applied (using the special tooling for the engine type) to the belt section to be measured to compensate for all the belt play.
- a **pre-stress T1** slightly greater than the **final fitting tension T2** to be applied.

The purpose of these two operations is to stabilise the belt's internal voltage, to make a reliable tension measurement.

WARNING
Replace any removed belt.

WARNING
When replacing the timing belt specified by the manufacturer, the belt, tension wheel and pulley(s) must be replaced.

Timing belts: Refitting

K9K, and 274 or 276 or 714 or 716 or 718 or 766 or 768

Special tooling required	
Mot. 1430	Set of 5 crankshaft and camshaft pulley timing pins.
Mot. 1489	TDC locating pin.

Tightening torques ▽	
tensioning roller bolt	**27 ± 2.7 Nm**
the camshaft pulley wheel bolts	**14 ± 1.4 Nm**
the tensioning roller bolt	**27 ± 2.7 Nm**
the camshaft pulley wheel bolts	**14± 1.4 Nm**
the crankshaft accessories pulley M14 bolt	**120 ± 12 Nm + 95° ± 15°**
TDC pin plug	**20 ± 2 Nm**
cylinder head suspended mounting bolts	**21 ± 2.1 Nm**
high-pressure pump position sensor bolt	**8 Nm**

I - RECOMMENDATIONS FOR REPAIR

IMPORTANT
Wear protective gloves during every operation.

WARNING
The belt must be replaced with a new one if it has been removed.

Never turn the engine in the opposite direction to its normal operating direction.

Do not run the engine without the accessories belt so as not to damage the crankshaft accessories pulley.

When replacing the belt, always replace the tensioning rollers and fixed rollers.

II - PARTS AND CONSUMABLES FOR THE REPAIR

Pièces à remplacer systématiquement

- Timing belt,
- Timing belt tensioning roller,
- Crankshaft accessories pulley bolt.

Ingrédients

- Silicone adhesive sealant, part no. **77 11 227 484**

III - ESSENTIAL EQUIPMENT

- Protective gloves,
- Allen key (**6 mm**),
- Female torx socket (**14**),
- Offset wrench (**18 mm**),
- Torque/angle wrench,
- Torque wrench
- Cylinder head bolt tightening gauge (angular measuring type).

K9K, and 274 or 276 or 714 or 716 or 718 or 766 or 768

IV - REFITTING

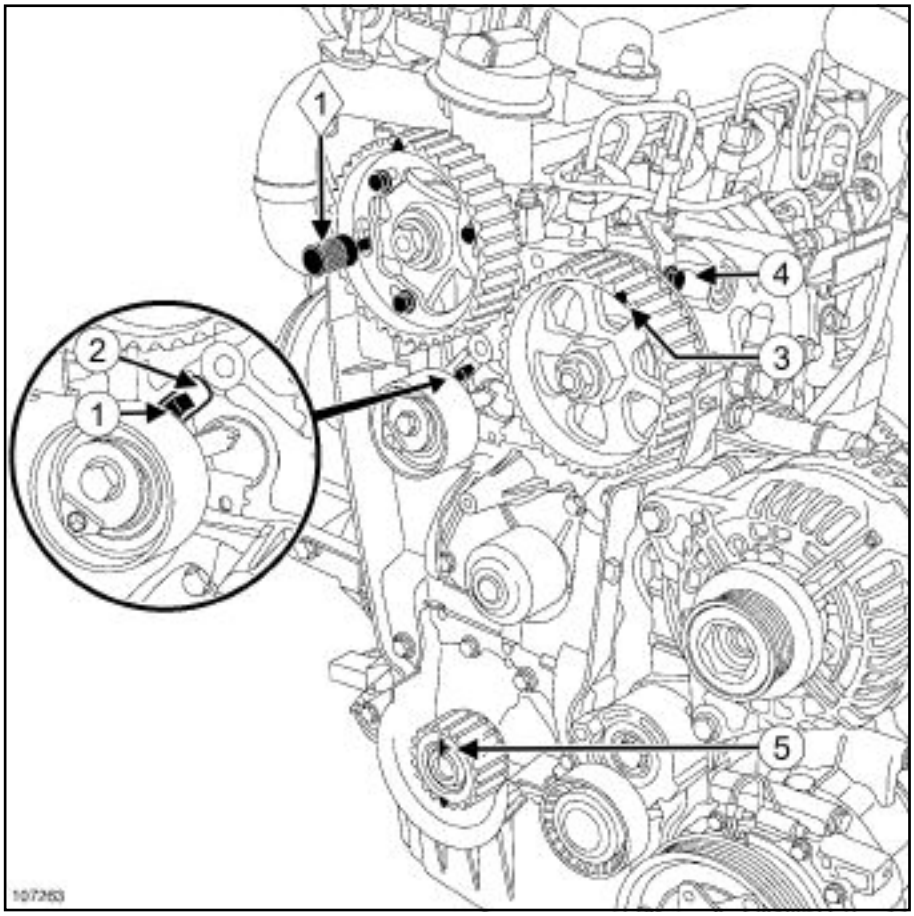

107263

Refit the timing tensioning roller.

Place the tensioning roller spigot (**1**) in the cylinder head groove (**2**) .

Engage the pin (**1**) **(Mot. 1430)** in the holes of the camshaft pulley and cylinder head, turning the camshaft using an **18 mm** offset wrench if necessary.

Check that the mark on the high-pressure pump (**3**) is opposite the bolt head (**4**) .

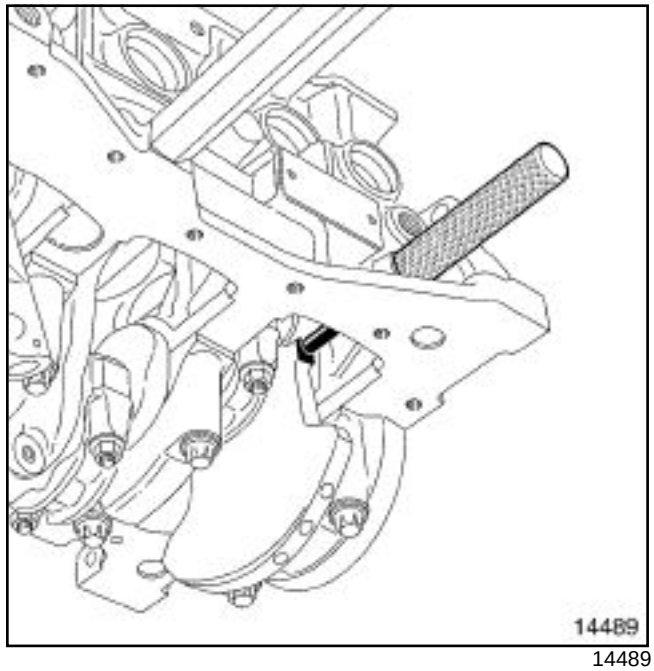

14489

Position the crankshaft so that it presses against the TDC setting pin **(Mot. 1489)** (the crankshaft sprocket cotter ***(5)*** must face upwards).

K9K, and 274 or 276 or 714 or 716 or 718 or 766 or 768

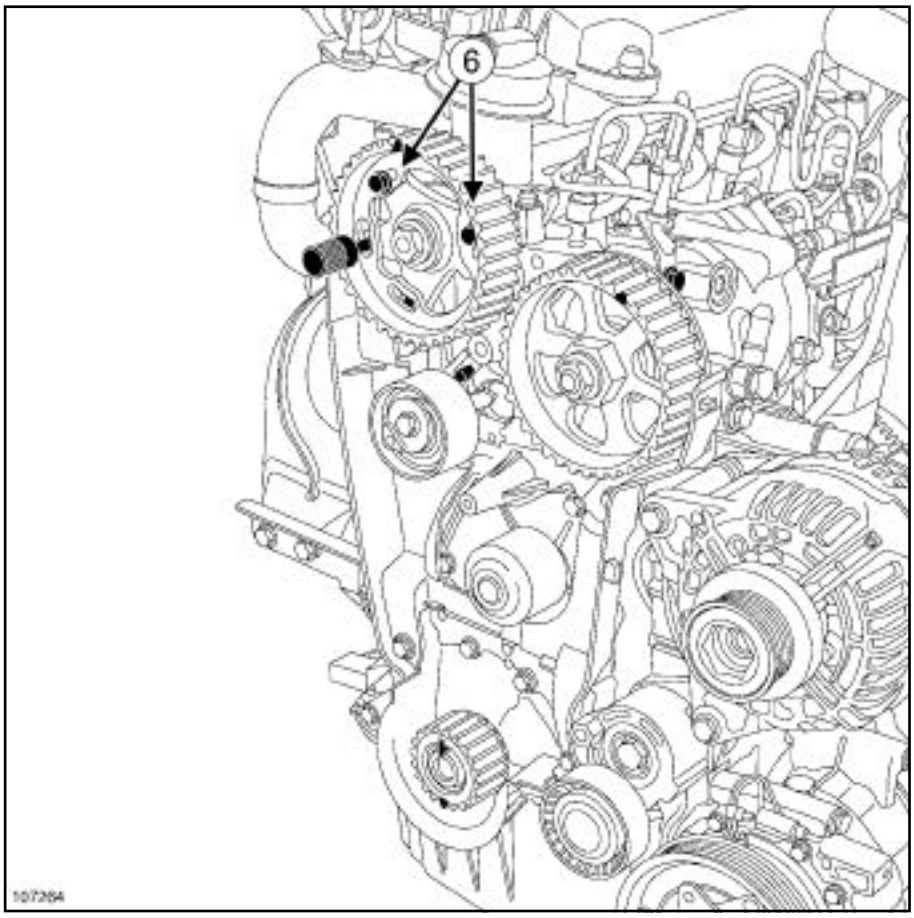

107264

Remove one bolt from the camshaft pulley wheel.

Loosen the two other camshaft pulley wheel bolts (**6**) by one turn.

K9K, and 274 or 276 or 714 or 716 or 718 or 766 or 768

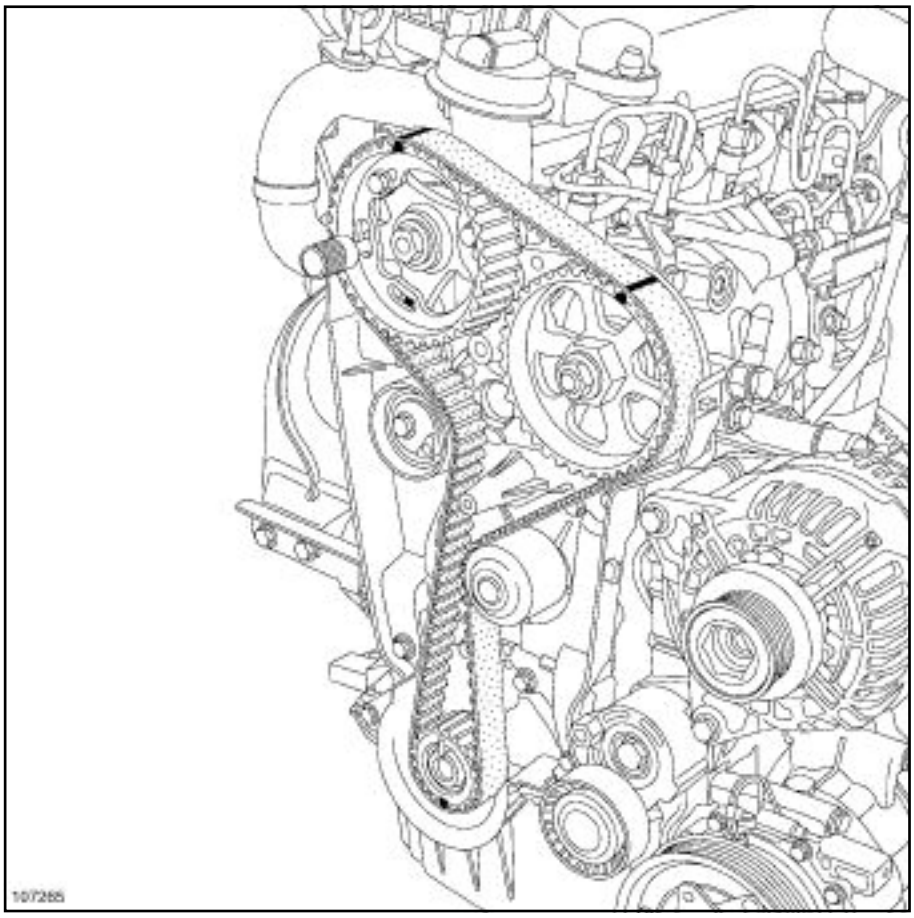

107265

Fit the timing belt, starting with the crankshaft sprocket, by aligning the marks on the belt with those on the crankshaft sprockets, the camshaft and the high-pressure pump.

Note:

There should be 19 tooth belt grooves between the camshaft sprocket marks and the high-pressure pump, and 51 tooth belt grooves between the crankshaft sprockets and the high-pressure pump.

K9K, and 274 or 276 or 714 or 716 or 718 or 766 or 768

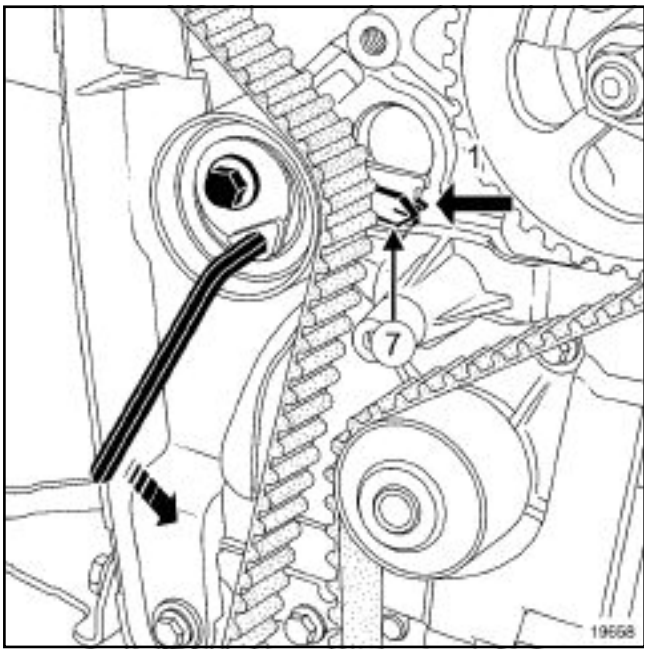

19658

Position the tensioning roller adjustable index (**7**) opposite the spigot, turning the eccentric cam anti-clockwise using a **6 mm** Allen key.

Tighten to torque the **tensioning roller bolt (27 ± 2.7 Nm)** .

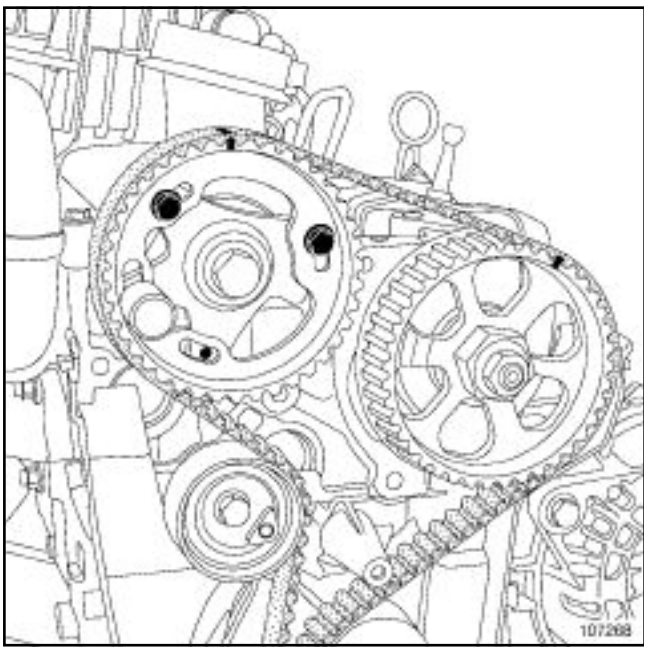

107268

Check that the camshaft pulley hub bolts are not fully up against the camshaft pulley wheel.

K9K, and 274 or 276 or 714 or 716 or 718 or 766 or 768

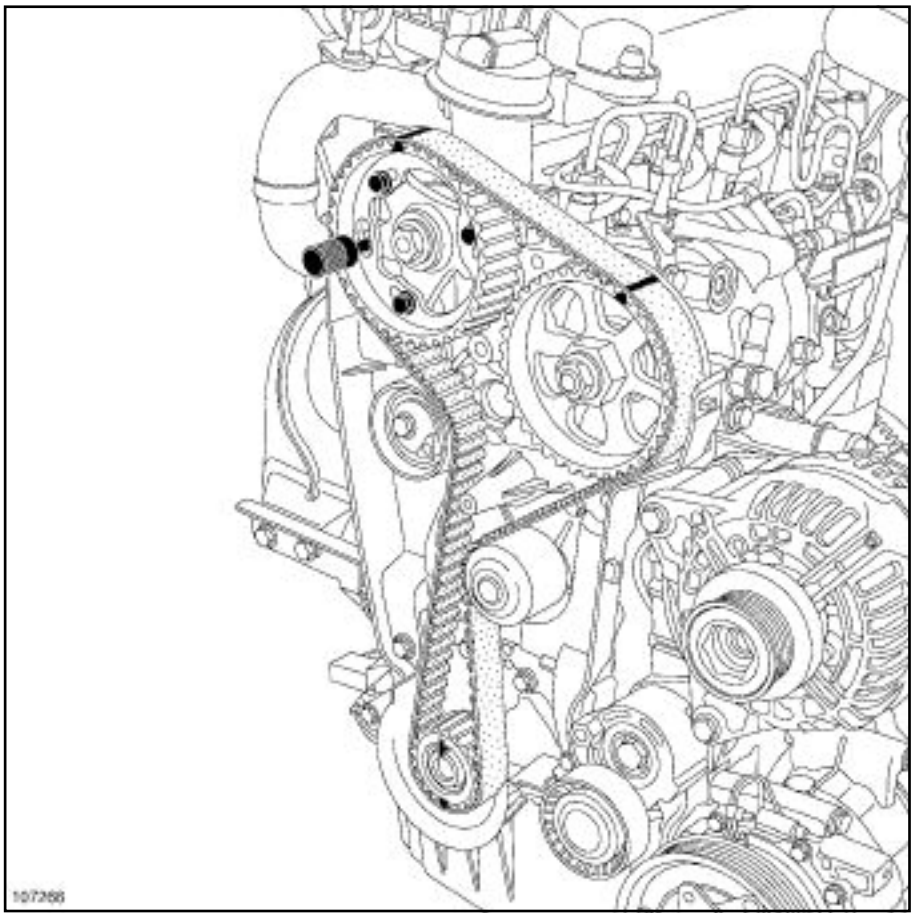

107266

Refit the bolt to the camshaft pulley wheel.

Tighten to torque **the camshaft pulley wheel bolts (14 ± 1.4 Nm)** .

Remove:

- the TDC setting pin **(Mot. 1489)** ,
- the set of 5 timing pins for the camshaft and crankshaft pulleys **(Mot. 1430)** .

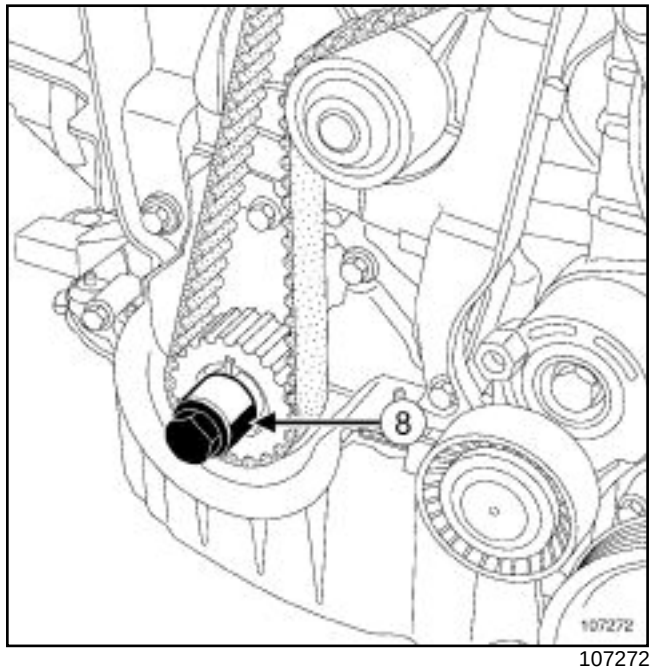

107272

Tighten the old crankshaft accessories pulley bolt fitted with a spacer (which does not cover the timing sprocket mark) (**8**) onto the crankshaft.

K9K, and 274 or 276 or 714 or 716 or 718 or 766 or 768

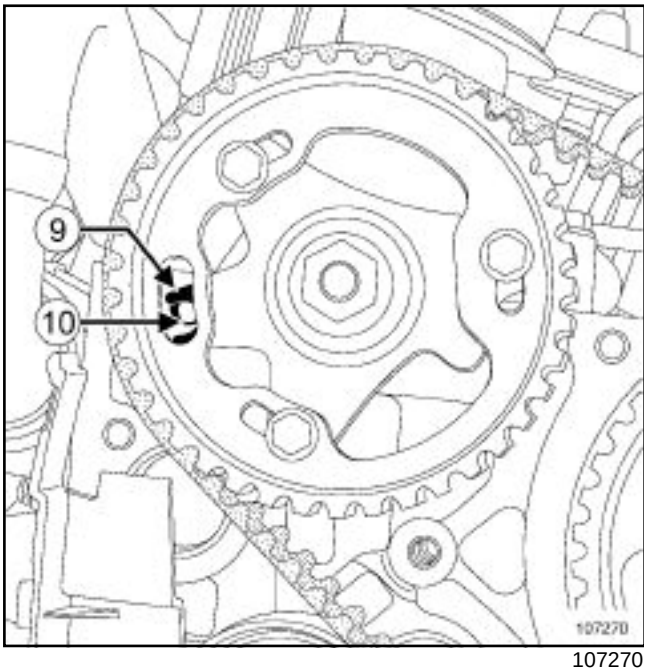

107270

Rotate the crankshaft clockwise through two revolutions (timing end), before the camshaft pulley hole (**9**) is opposite the cylinder head hole (**10**) .

Screw the TDC setting pin **(Mot. 1489)** into the cylinder block.

Bring the crankshaft slowly and smoothly against the TDC setting pin.

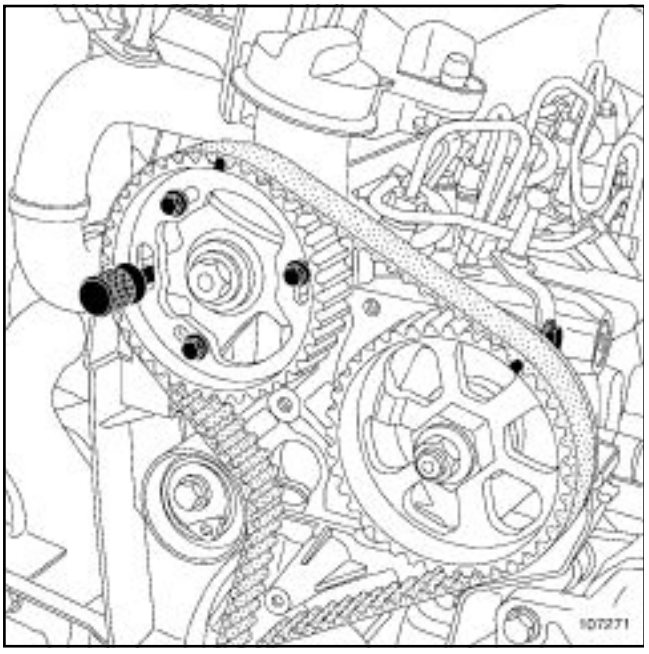

107271

Set the camshaft pulley using the **(Mot. 1430)** .

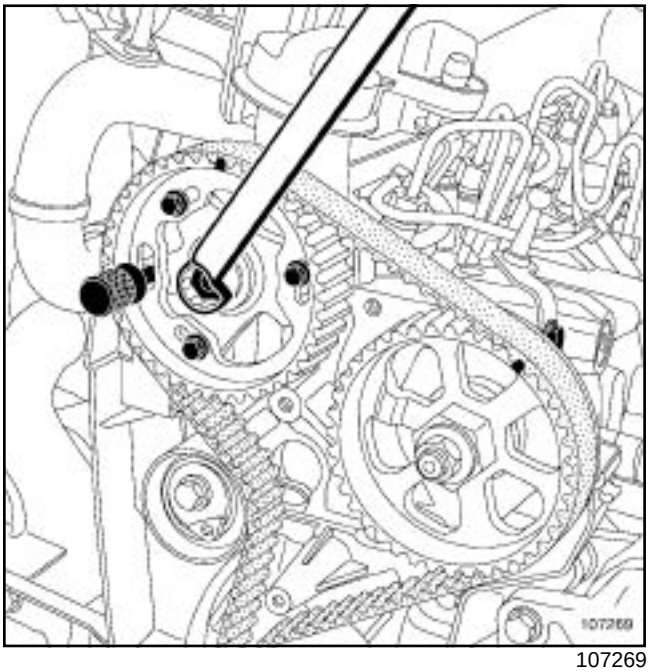

107269

If the pin **(Mot. 1430)** does not engage:

loosen the camshaft pulley wheel bolts by one turn at most,

Turn the camshaft pulley hub using an **18 mm** offset wrench to set the camshaft pulley hub timing.

Do not retighten the camshaft pulley wheel bolts.

K9K, and 274 or 276 or 714 or 716 or 718 or 766 or 768

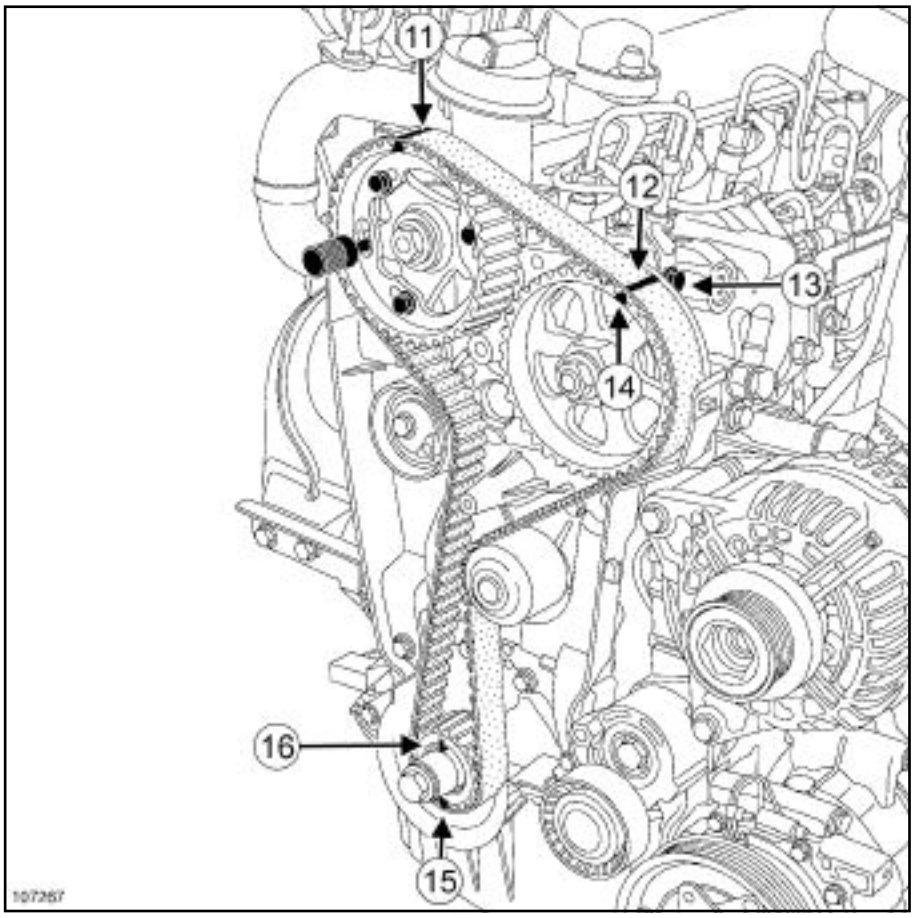

107267

Check:

- that the high-pressure pump sprocket mark (**14**) is opposite the bolt head (**13**) ,
- that the crankshaft timing sprocket cotter (**16**) is positioned vertically at the top,
- that there are 19 tooth belt grooves between the camshaft sprocket marks (**11**) and the high-pressure pump sprocket (**12**) ,
- that there are 51 tooth belt grooves between the crankshaft sprocket marks (**15**) and the high-pressure pump sprocket (**12**) .

Note:

After two turns, the tensioning roller index markers may be in two different positions.

The rotation of the tensioning roller eccentric depends on the position.

K9K, and 274 or 276 or 714 or 716 or 718 or 766 or 768

First position

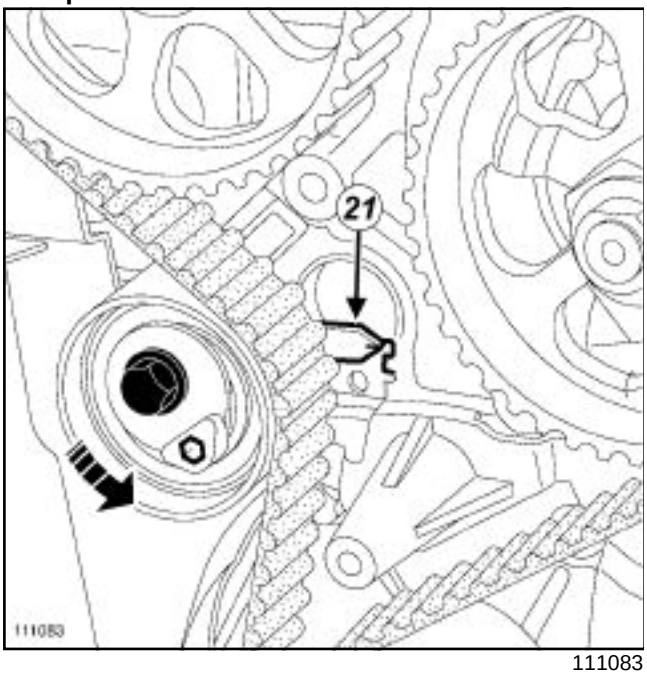

111083

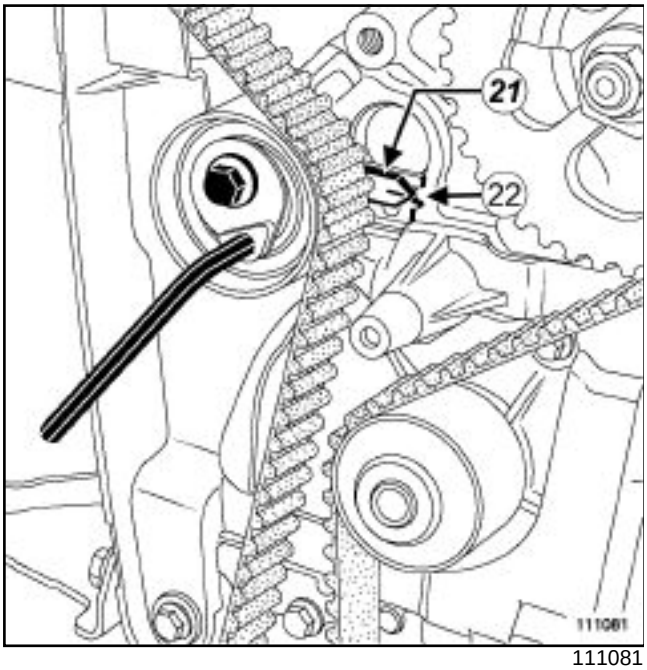

111081

Loosen the tensioning roller bolt by no more than one turn, holding it with a **6 mm** Allen key.

Gradually align the adjustable index (**21**) in the middle of the timing window (**22**) , turning the key anti-clockwise.

Second position

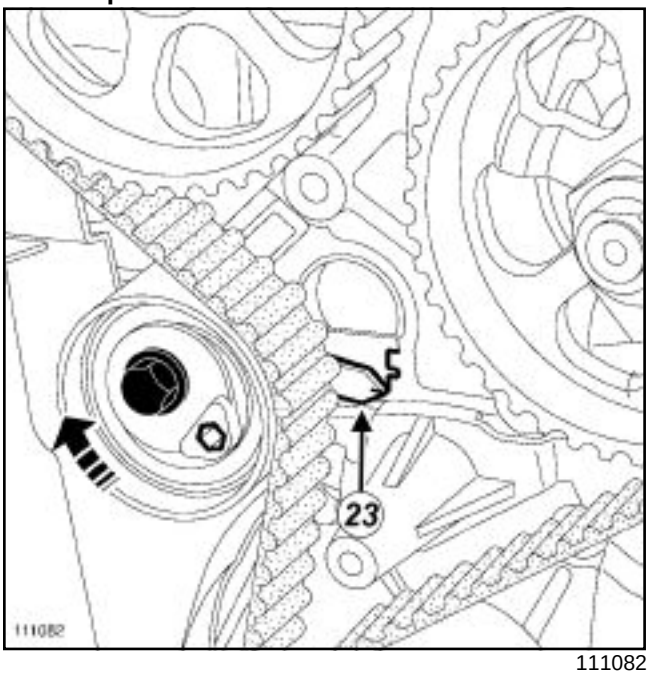

111082

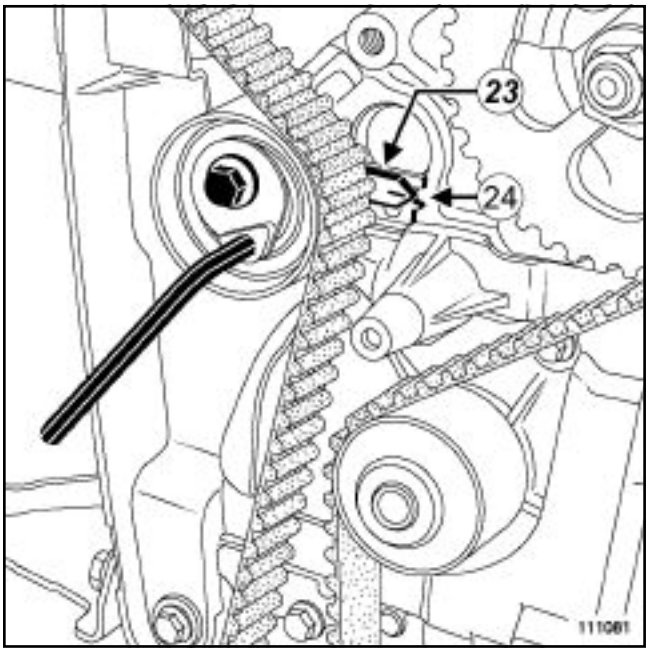

111081

Loosen the tensioning roller bolt by no more than one turn, holding it with a **6 mm** Allen key.

Gradually align the adjustable index (**23**) in the middle of the timing window (**24**) , turning the key clockwise.

Tighten to torque:

- **the tensioning roller bolt (27 ± 2.7 Nm)** ,
- **the camshaft pulley wheel bolts (14± 1.4 Nm)** .

Remove the following tools:

- TDC setting pin **(Mot. 1489)** ,

K9K, and 274 or 276 or 714 or 716 or 718 or 766 or 768

- the set of 5 timing pins for the camshaft and crankshaft pulleys **(Mot. 1430)** .

Rotate the crankshaft clockwise through two revolutions (timing end), before the camshaft pulley hole is opposite the cylinder head hole.

Screw the TDC setting pin **(Mot. 1489)** into the cylinder block.

Bring the crankshaft slowly and smoothly against the TDC setting pin.

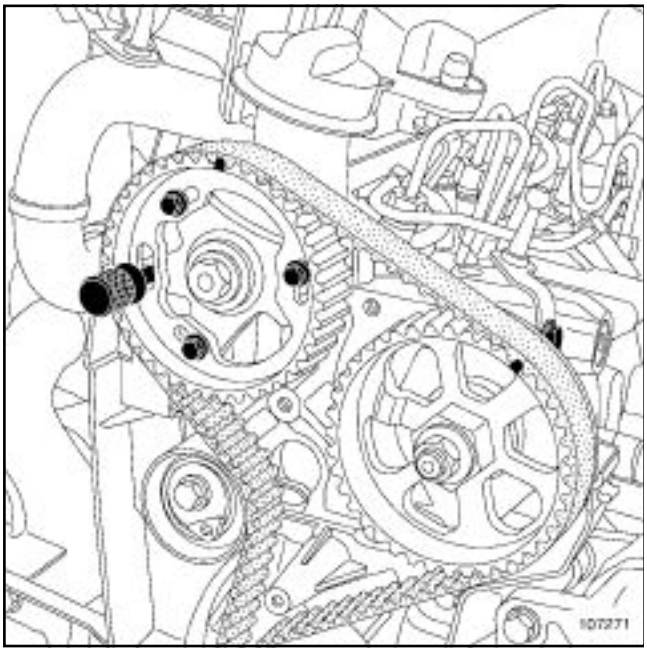

107271

Set the camshaft pulley using the **(Mot. 1430)** .

If this is not possible, repeat the timing belt refitting operation.

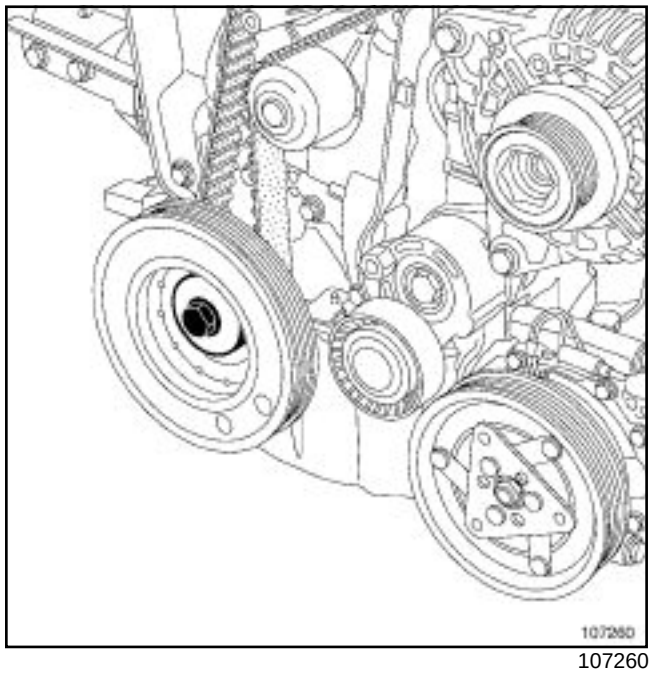

107260

Refit the accessories crankshaft pulley with a new bolt.

Tighten to torque and angle (crankshaft in contact with the TDC setting pin) **the crankshaft accessories pulley M14 bolt (120 ± 12 Nm + 95° ± 15°)** .

Remove the following tools:

- TDC setting pin **(Mot. 1489)** ,
- the set of 5 timing pins for the camshaft and crankshaft pulleys **(Mot. 1430)** .

Refit the TDC pin plug, coating the thread with **SILICONE ADHESIVE SEALANT** .

Tighten to torque the **TDC pin plug (20 ± 2 Nm)** .

K9K, and 274 or 276 or 714 or 716 or 718 or 766 or 768

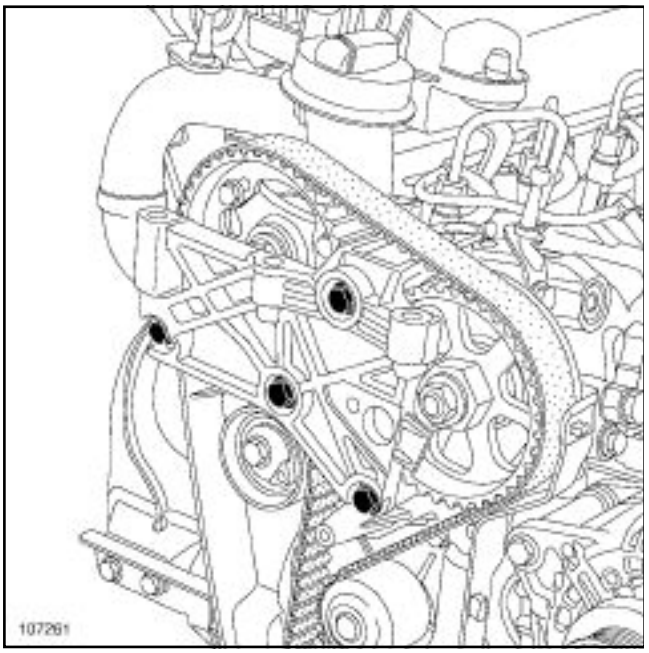

107261

Refit the cylinder head suspended mounting.

Tighten to torque the **cylinder head suspended mounting bolts (21 ± 2.1 Nm)** .

K9K, and 274 or 276 or 714 or 716 or 718 or 766 or 768

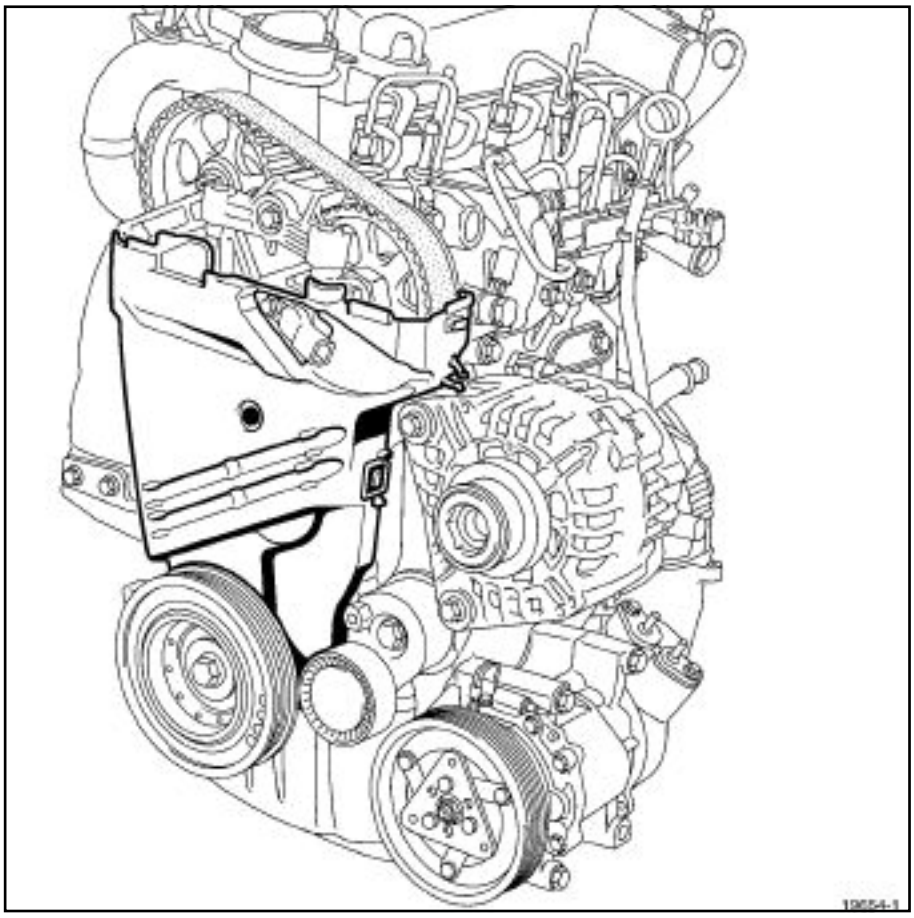

19654-1

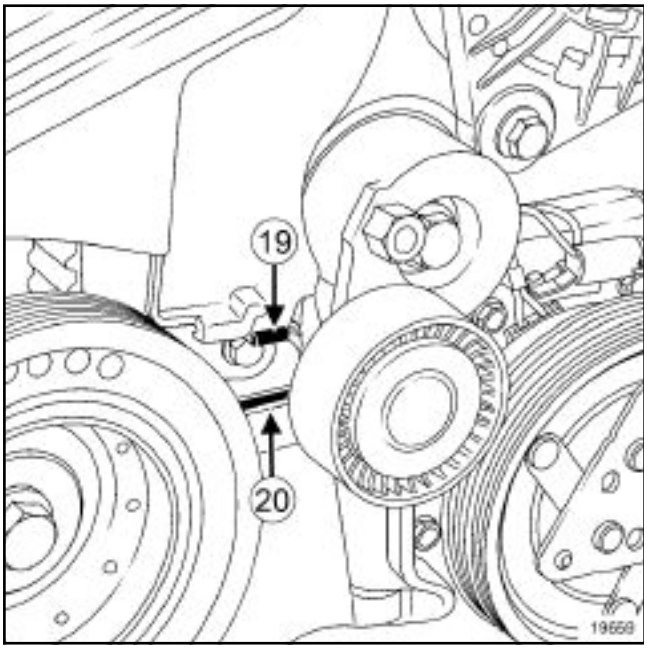

19659

Refit:

- the lower timing cover, positioning the tab (**19**) in the inner timing cover hole (**20**) ,
- the timing cover plastic mounting bolt.

K9K, and 274 or 276 or 714 or 716 or 718 or 766 or 768

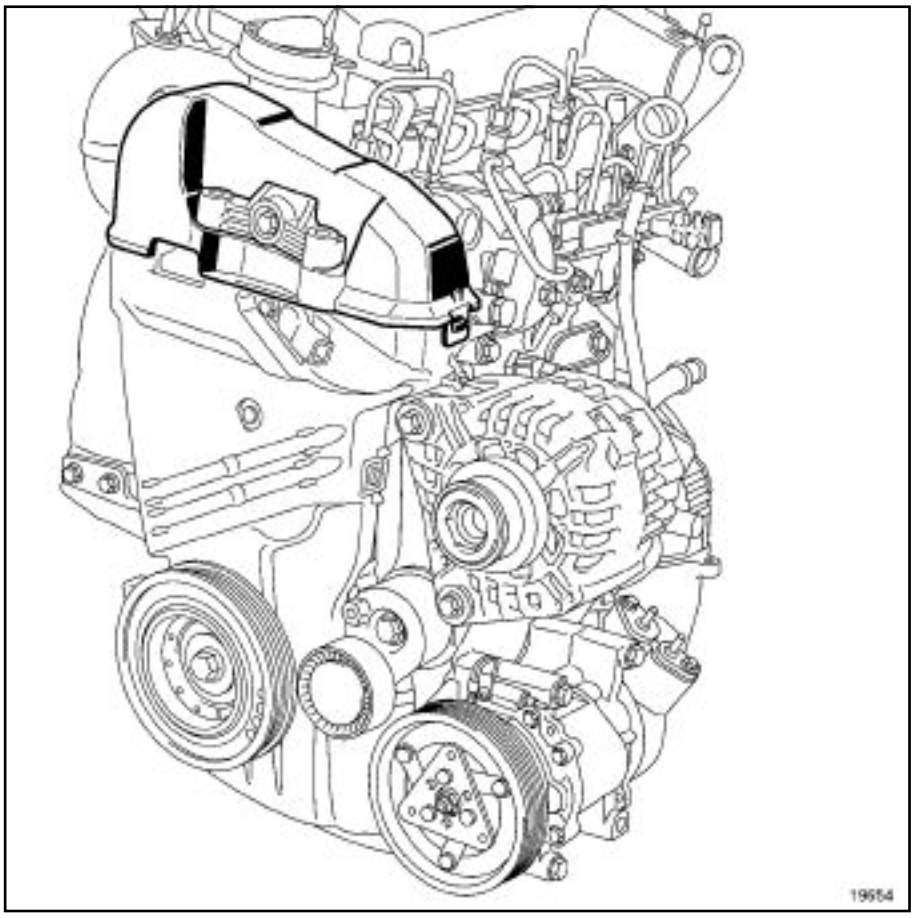

19654

Refit the high-pressure pump position sensor.

Tighten to torque the **high-pressure pump position sensor bolt (8 Nm)** .

Refit the upper timing cover.

Timing belts: Refitting

K9K, and 260 or 270 or 272 or 700 or 702 or 704 or 706 or 710 or 712 or 722 or 724 or 728 or 729 or 750 or 752 or 760 or 762 or 790

Special tooling required	
Mot. 1430	Set of 5 crankshaft and camshaft pulley timing pins.
Mot. 1489	TDC locating pin.

Tightening torques ▽	
timing pulley bolt	**27 Nm**
the crankshaft accessories pulley M12 bolt	**60 Nm + 100° ± 10°**
the crankshaft accessories pulley M14 bolt	**120 Nm + 95° ± 15°**
tensioning roller bolt to	**27 Nm**
TDC cap	**20 Nm**
cylinder head suspended mounting bolt	**21 Nm**
high-pressure pump position sensor bolt	**8 Nm**

I - RECOMMENDATIONS FOR REPAIR

IMPORTANT
Wear protective gloves during every operation.

WARNING
The belt must be replaced with a new one if it has been removed.

Never turn the engine in the opposite direction to its normal operating direction.

Do not run the engine without the accessories belt so as not to damage the crankshaft accessories pulley.

When replacing the belt, always replace the tensioning rollers and fixed rollers.

It is essential to remove the grease from the end of the crankshaft, the camshaft timing sprocket and the bearing face of the crankshaft accessories pulley. This is to avoid timing slippage.

II - PARTS AND CONSUMABLES FOR THE REPAIR

Pièces à remplacer systématiquement

- Timing belt,
- Timing belt tensioning roller,
- Crankshaft accessories pulley bolt.

Ingrédients

- Silicone adhesive sealant, part no. **77 11 227 484** ,
- Degreaser, part no. **77 11 224 559** .

III - EQUIPMENT REQUIRED

- Protective gloves,
- Allen key (**6 mm**),
- Female torx socket (**14**),
- Offset wrench (**18 mm**),
- Torque/angle wrench,
- Torque wrench
- Cylinder head bolt tightening gauge (angular measuring type).

K9K, and 260 or 270 or 272 or 700 or 702 or 704 or 706 or 710 or 712 or 722 or 724 or 728 or 729 or 750 or 752 or 760 or 762 or 790

IV - REFITTING

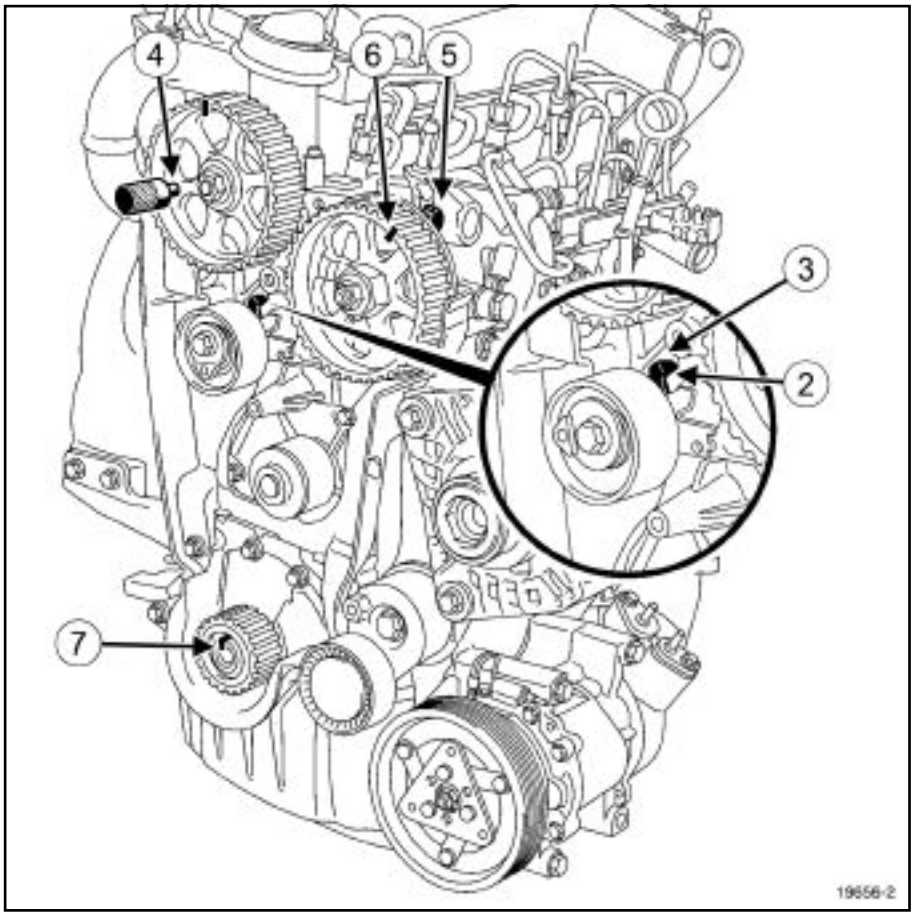

19656-2

Refit:

- the crankshaft timing sprocket,
- the timing tensioning roller.

Put the tensioning roller spigot (**2**) in the cylinder head groove (**3**) .

Engage the pin **(Mot. 1430)** in the camshaft pulley and cylinder head holes at (**4**) . Turn the camshaft using an **18 mm** offset wrench if necessary.

Check that the mark on the high-pressure pump pulley (**6**) is opposite the bolt head (**5**) .

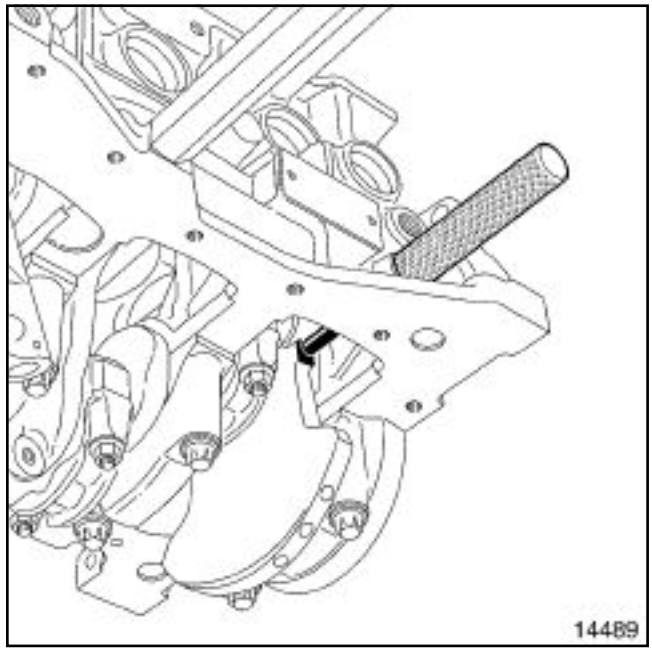

14489

Position the crankshaft so that it presses against the TDC setting pin **(Mot. 1489)** (the crankshaft groove ***(7)*** must face upwards).

K9K, and 260 or 270 or 272 or 700 or 702 or 704 or 706 or 710 or 712 or 722 or 724 or 728 or 729 or 750 or 752 or 760 or 762 or 790

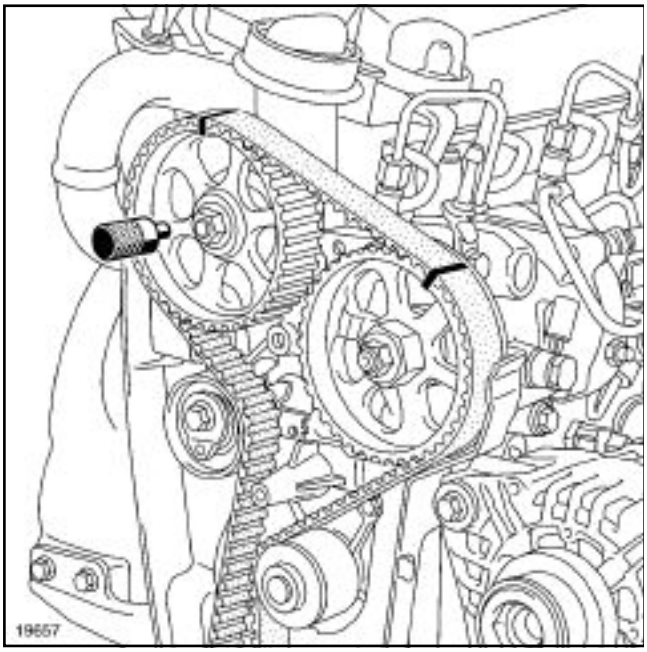

19657

Fit the timing belt, starting with the crankshaft sprocket, aligning the marks on the belt with those on the camshaft and high-pressure pump pulleys.

Note:

There must be 19 tooth belt grooves between the marks of the high-pressure pump and camshaft pulleys.

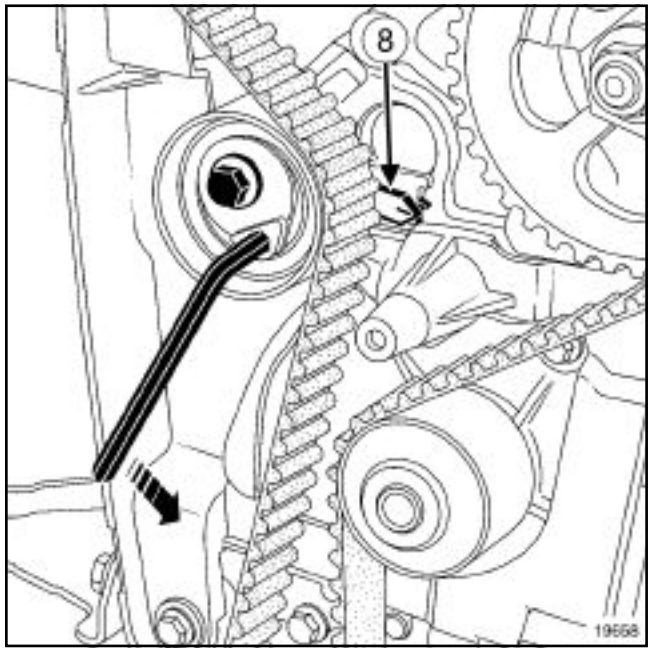

19658

Position the tensioning roller adjustable index (**8**) opposite the spigot, turning the eccentric cam anti-clockwise using a **6 mm** Allen key.

Tighten to torque the **timing pulley bolt (27 Nm)** .

Refit the accessories crankshaft pulley with a new bolt.

Torque and angle-tighten (crankshaft in contact with the TDC setting pin):

- **the crankshaft accessories pulley M12 bolt (60 Nm + 100° ± 10°)** ,
- **the crankshaft accessories pulley M14 bolt (120 Nm + 95° ± 15°)**

Remove the following tools:

- the set of 5 timing pins for the camshaft and crankshaft pulleys **(Mot. 1430)** ,
- the TDC setting pin **(Mot. 1489)** .

K9K, and 260 or 270 or 272 or 700 or 702 or 704 or 706 or 710 or 712 or 722 or 724 or 728 or 729 or 750 or 752 or 760 or 762 or 790

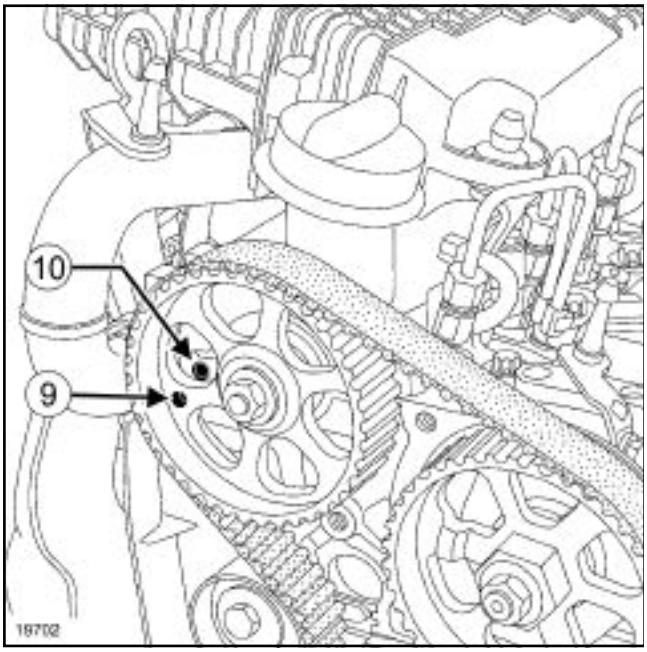

19702

Rotate the crankshaft clockwise through two revolutions (timing end), before the camshaft pulley hole (**9**) is opposite the cylinder head hole (**10**) .

Screw the TDC setting pin **(Mot. 1489)** into the cylinder block.

Bring the crankshaft slowly and smoothly against the TDC setting pin.

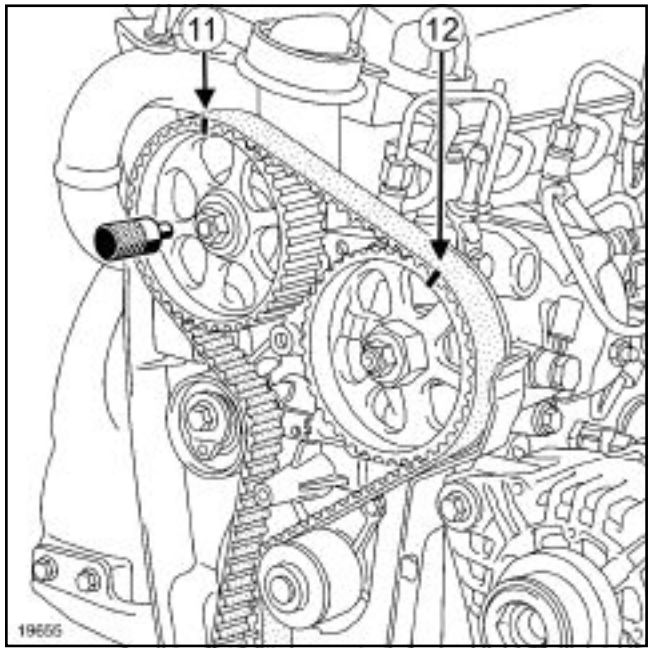

19655

Set the camshaft pulley using the **(Mot. 1430)** .

Note:

There must be **19 tooth belt grooves** between the camshaft pulley marks (**11**) and the high-pressure pump pulley (**12**)

Remove:

- the TDC setting pin **(Mot. 1489)** ,
- the set of 5 timing pins for the camshaft and crankshaft pulleys **(Mot. 1430)** .

Note:

After two turns, the tensioning roller index markers may be in two different positions.

The rotation of the tensioning roller eccentric cam depends on the position.

K9K, and 260 or 270 or 272 or 700 or 702 or 704 or 706 or 710 or 712 or 722 or 724 or 728 or 729 or 750 or 752 or 760 or 762 or 790

First position

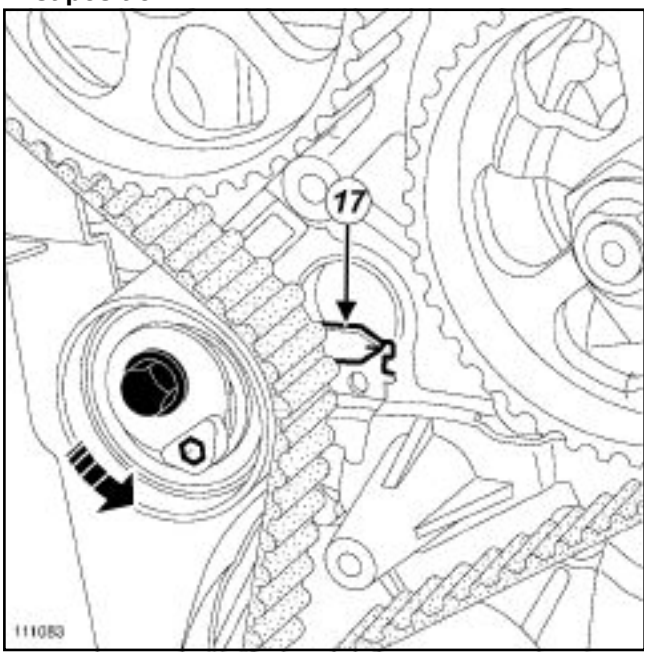

111083

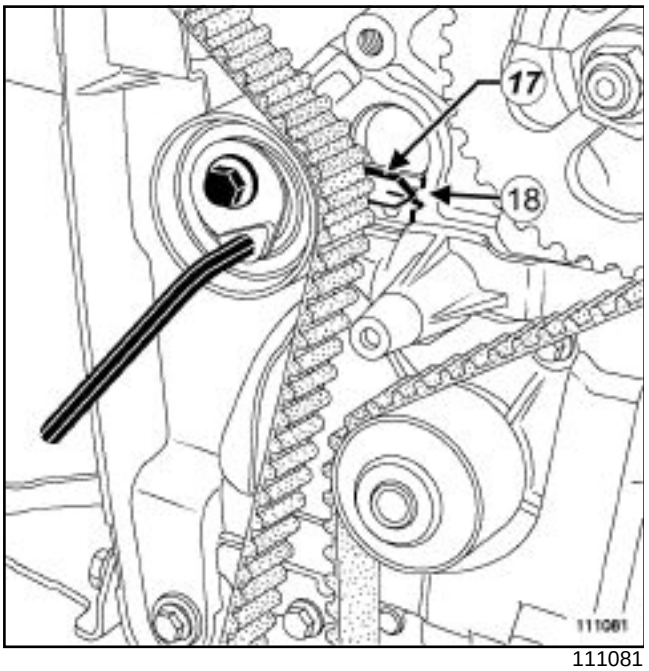

111081

Loosen the tensioning roller bolt by no more than one turn, holding it with a **6 mm** Allen key.

Gradually align the adjustable index (**17**) in the middle of the timing window (**18**) , turning the key anti-clockwise.

K9K, and 260 or 270 or 272 or 700 or 702 or 704 or 706 or 710 or 712 or 722 or 724 or 728 or 729 or 750 or 752 or 760 or 762 or 790

Second position

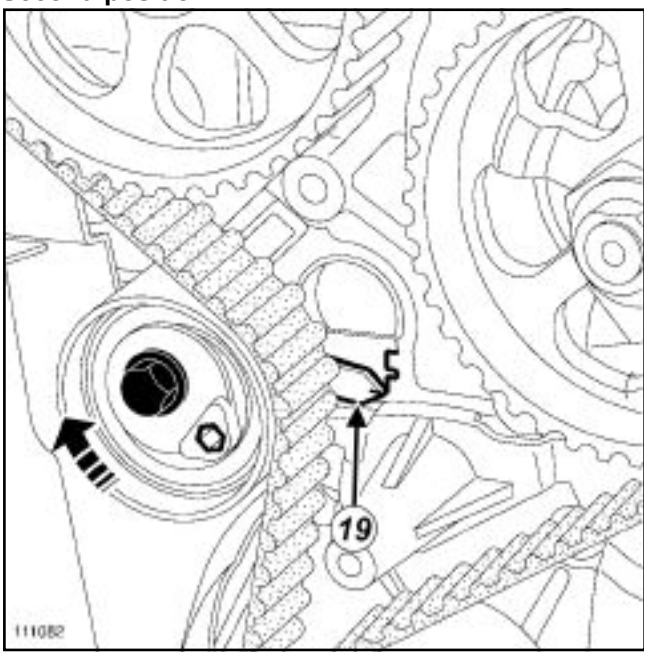

111082

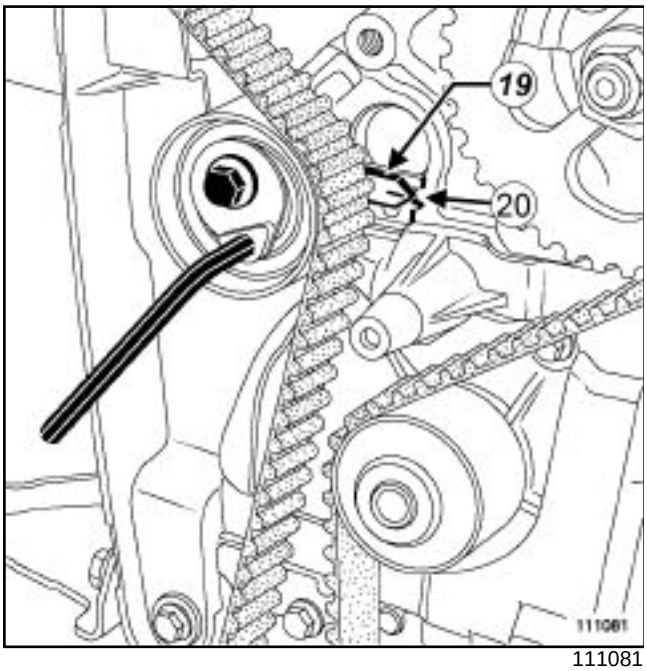

111081

Loosen the tensioning roller bolt by no more than one turn, holding it with a **6 mm** Allen key.

Gradually align the adjustable index (**19**) in the middle of the timing window (**20**) , turning the key clockwise.

Tighten to torque the **tensioning roller bolt to (27 Nm)** .

Rotate the crankshaft clockwise through two revolutions (timing end), before the camshaft pulley hole is opposite the cylinder head hole.

Screw the TDC setting pin **(Mot. 1489)** into the cylinder block.

Bring the crankshaft slowly and smoothly against the TDC setting pin.

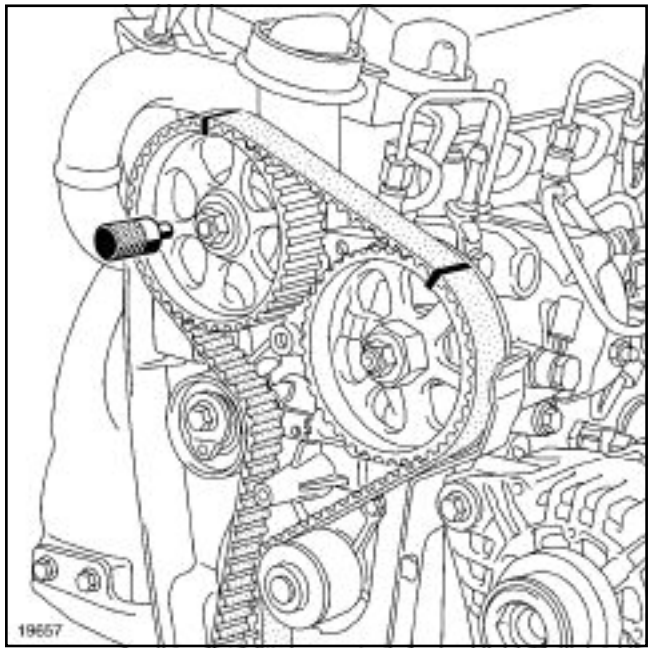

19657

Set the camshaft pulley using the **(Mot. 1430)** .

If this is not possible, repeat the timing belt refitting operation.

Remove the following tools:

- TDC setting pin **(Mot. 1489)** ,
- the set of 5 timing pins for the camshaft and crankshaft pulleys **(Mot. 1430)**

Place a drop of **SILICONE ADHESIVE SEALANT** on the threading of the TDC pin plug.

Tighten to torque the **TDC cap (20 Nm)** .

K9K, and 260 or 270 or 272 or 700 or 702 or 704 or 706 or 710 or 712 or 722 or 724 or 728 or 729 or 750 or 752 or 760 or 762 or 790

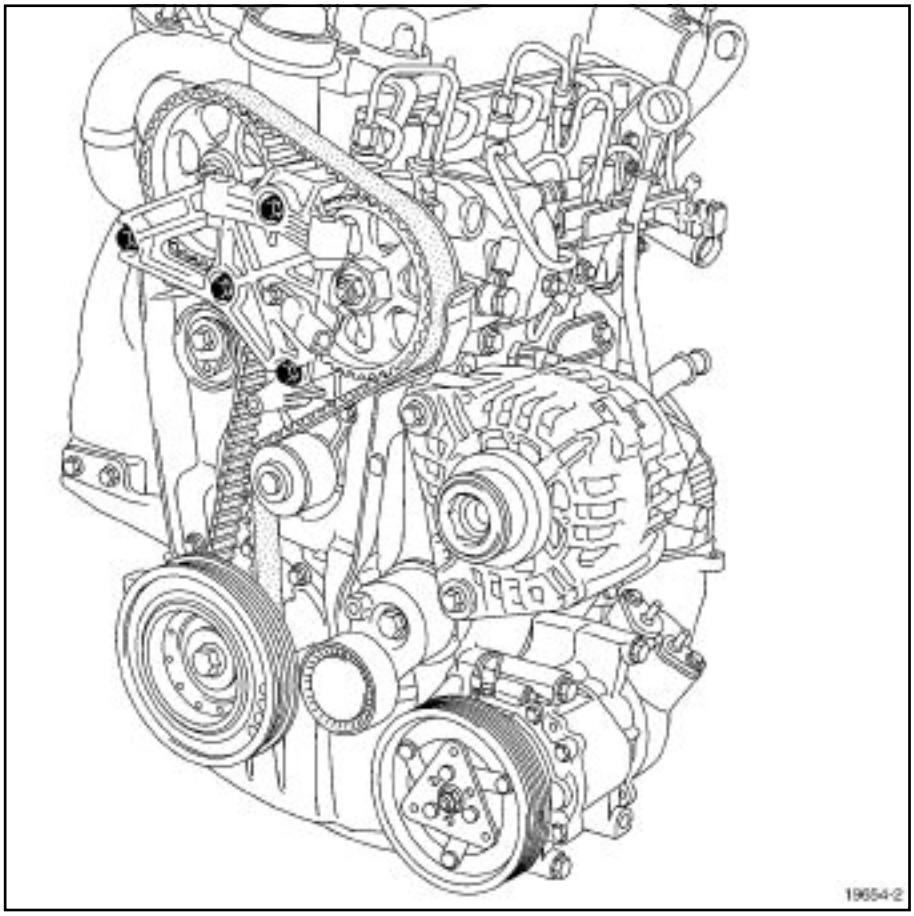

19654-2

Refit the cylinder head suspended mounting.

Tighten to torque the **cylinder head suspended mounting bolt (21 Nm)** .

K9K, and 260 or 270 or 272 or 700 or 702 or 704 or 706 or 710 or 712 or 722 or 724 or 728 or 729 or 750 or 752 or 760 or 762 or 790

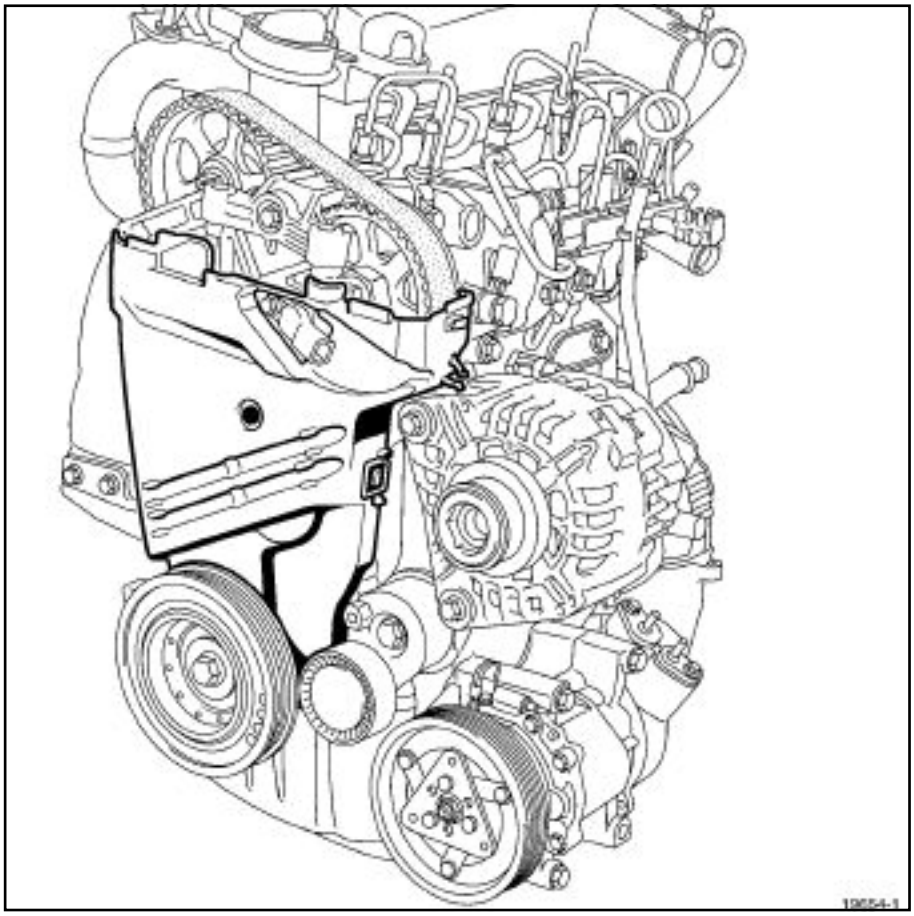

19654-1

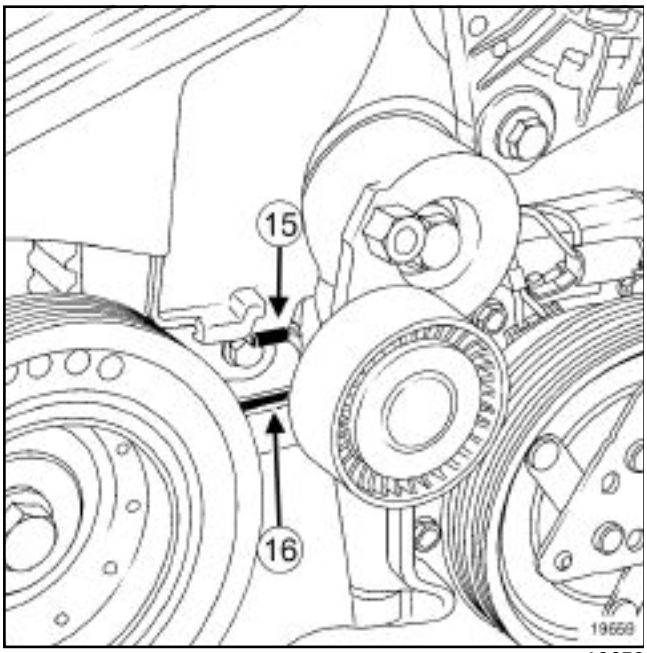

19659

Refit the timing cover, positioning the tab (**15**) in the inner timing cover hole (**16**) .

K9K, and 260 or 270 or 272 or 700 or 702 or 704 or 706 or 710 or 712 or 722 or 724 or 728 or 729 or 750 or 752 or 760 or 762 or 790

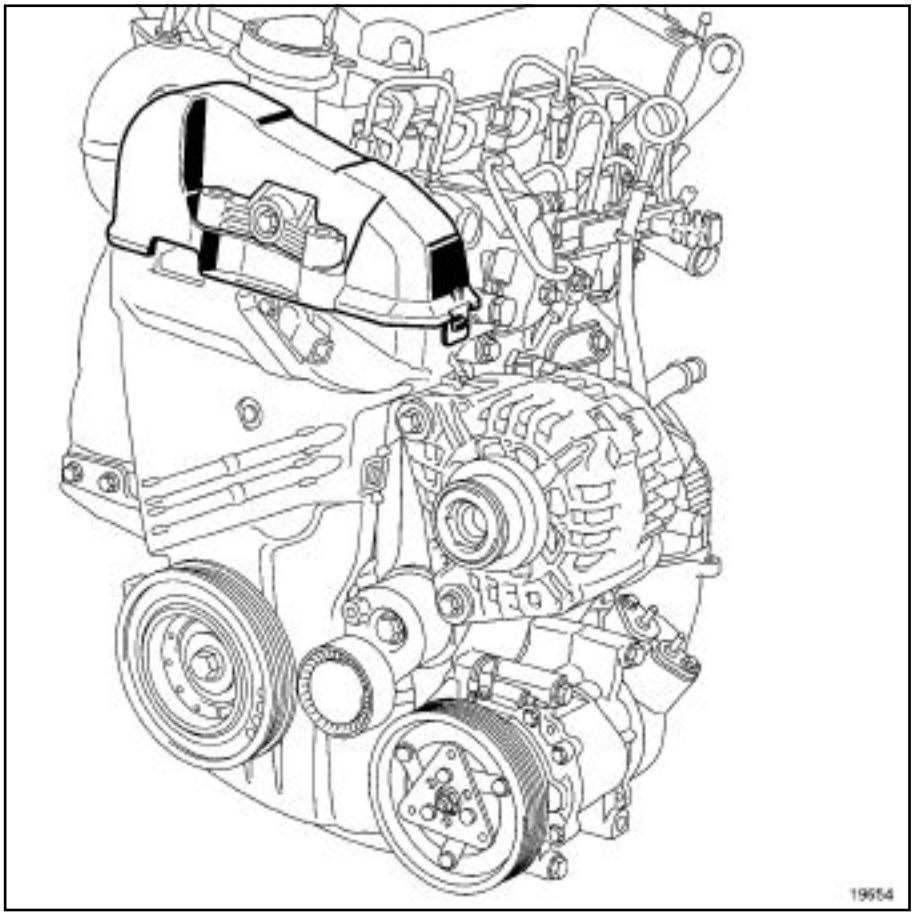

19654

Refit the high-pressure pump position sensor.

Tighten to torque the **high-pressure pump position sensor bolt (8 Nm)** .

Refit the upper timing cover.

Timing belts: Refitting

K9K, and 732 or 764

Special tooling required	
Mot. 1430	Set of 5 crankshaft and camshaft pulley timing pins.
Mot. 1489	TDC locating pin.

Tightening torques ▽	
tensioning roller bolt	**27 ± 2.7 Nm**
the camshaft pulley wheel bolts	**14 ± 1.4 Nm**
the tensioning roller bolt	**27 ± 2.7 Nm**
the camshaft pulley wheel bolts	**14± 1.4 Nm**
the crankshaft accessories pulley M14 bolt	**120 ± 12 Nm + 95° ± 15°**
TDC pin plug	**20 ± 2 Nm**
cylinder head suspended mounting bolts	**21 ± 2.1 Nm**
cylinder head suspended mounting bolts	**21 ± 2.1 Nm**

I - RECOMMENDATIONS FOR REPAIR

IMPORTANT
Wear protective gloves during every operation.

WARNING
The belt must be replaced with a new one if it has been removed.

Never turn the engine in the opposite direction to its normal operating direction.

Do not run the engine without the accessories belt so as not to damage the crankshaft accessories pulley.

When replacing the belt, always replace the tensioning rollers and fixed rollers.

II - PARTS AND CONSUMABLES FOR THE REPAIR

Parts always to be replaced

- Timing belt,
- Timing belt tensioning roller,
- Crankshaft accessories pulley bolt.

Consumables

- Silicone adhesive sealant, part no. **77 11 227 484**

III - ESSENTIAL EQUIPMENT

- Protective gloves,
- Allen key (**6 mm**),
- Female torx socket (**14**),
- Offset wrench (**18 mm**),
- Torque/angle wrench,
- Torque wrench
- Cylinder head bolt tightening gauge (angular measuring type).

K9K, and 732 or 764

IV - REFITTING

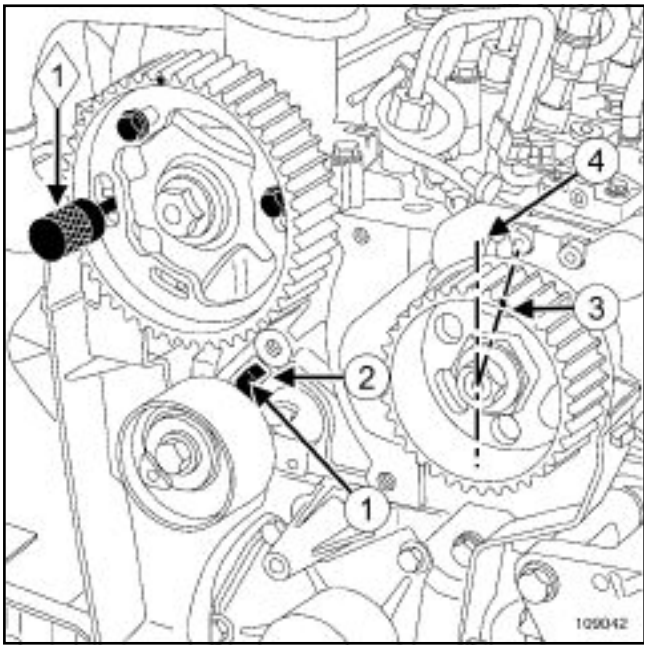

109042

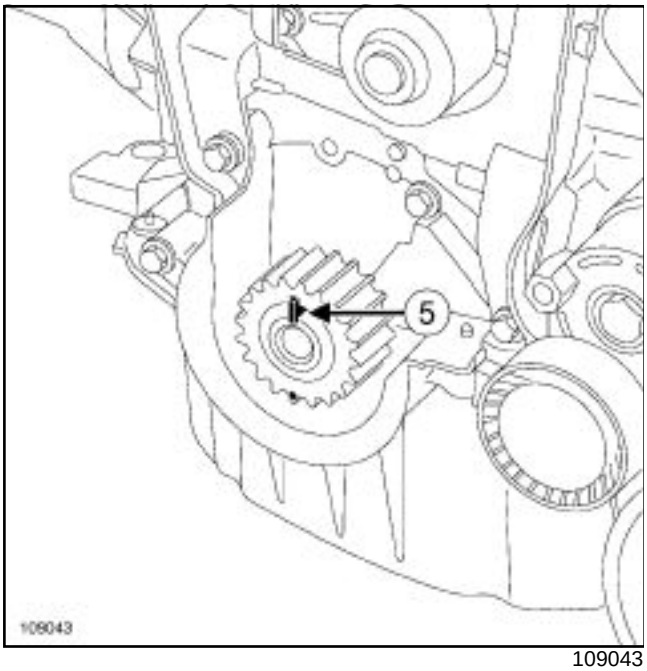

109043

Refit the timing tensioning roller.

Put the tensioning roller spigot (**1**) in the cylinder head groove (**2**) .

Engage the pin (**1**) **(Mot. 1430)** in the holes of the camshaft pulley and cylinder head, turning the camshaft using an **18 mm** offset wrench if necessary.

Check that the high-pressure pump mark (**3**) has shifted one tooth to the right of the vertical axle (**4**) .

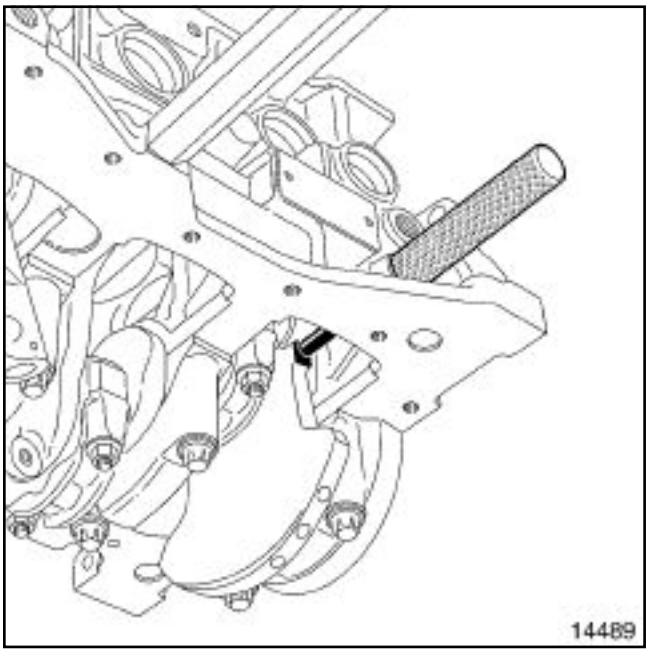

14489

Position the crankshaft so that it presses on the TDC setting pin **(Mot. 1489)** (the crankshaft timing sprocket cotter ***(5)*** must face upwards).

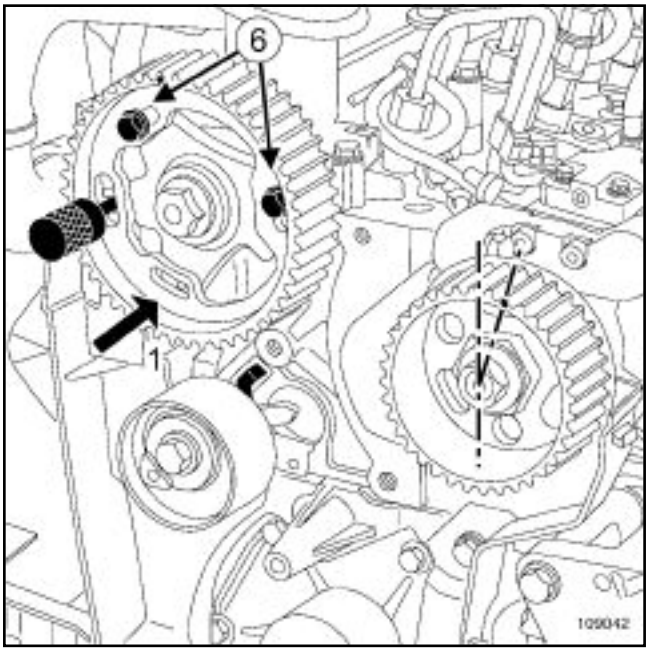

109042

Remove one bolt from the camshaft pulley wheel.

Loosen the two other camshaft pulley wheel bolts (**6**) by one turn.

K9K, and 732 or 764

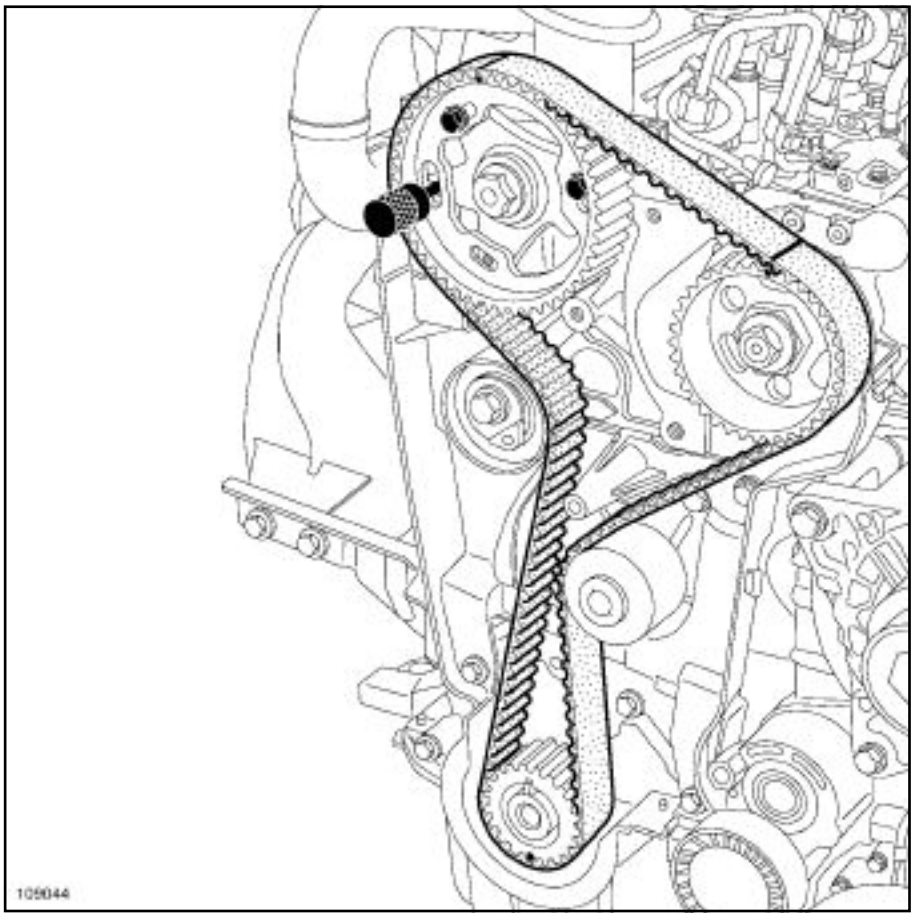

109044

Fit the timing belt, starting with the crankshaft sprocket, by aligning the marks on the belt with those on the crankshaft sprockets, the camshaft and the high-pressure pump.

Note:

There should be 19 tooth belt grooves between the camshaft sprocket marks and the high-pressure pump, and 51 tooth belt grooves between the crankshaft sprockets and the high-pressure pump.

K9K, and 732 or 764

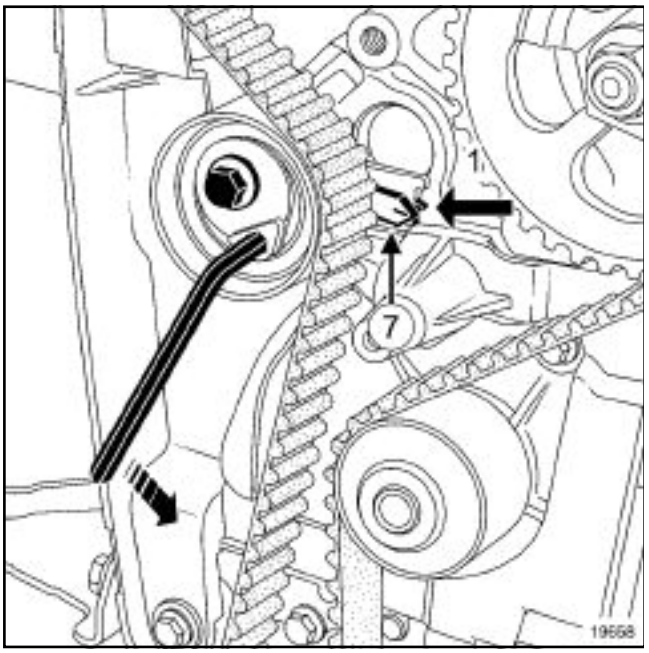

19658

Position the tensioning roller adjustable index (**7**) opposite the spigot, turning the eccentric cam anti-clockwise using a **6 mm** Allen key.

Tighten to torque the **tensioning roller bolt (27 ± 2.7 Nm)** .

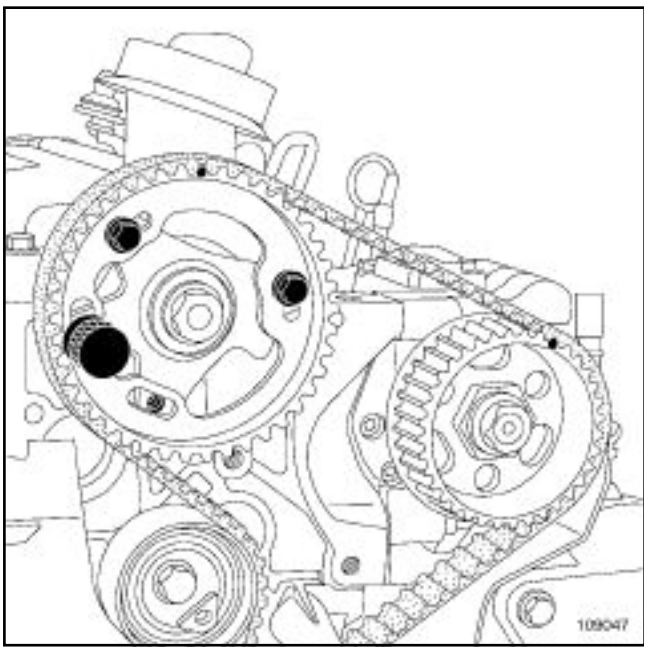

109047

Check that the camshaft pulley hub bolts are not fully up against the camshaft pulley wheel.

K9K, and 732 or 764

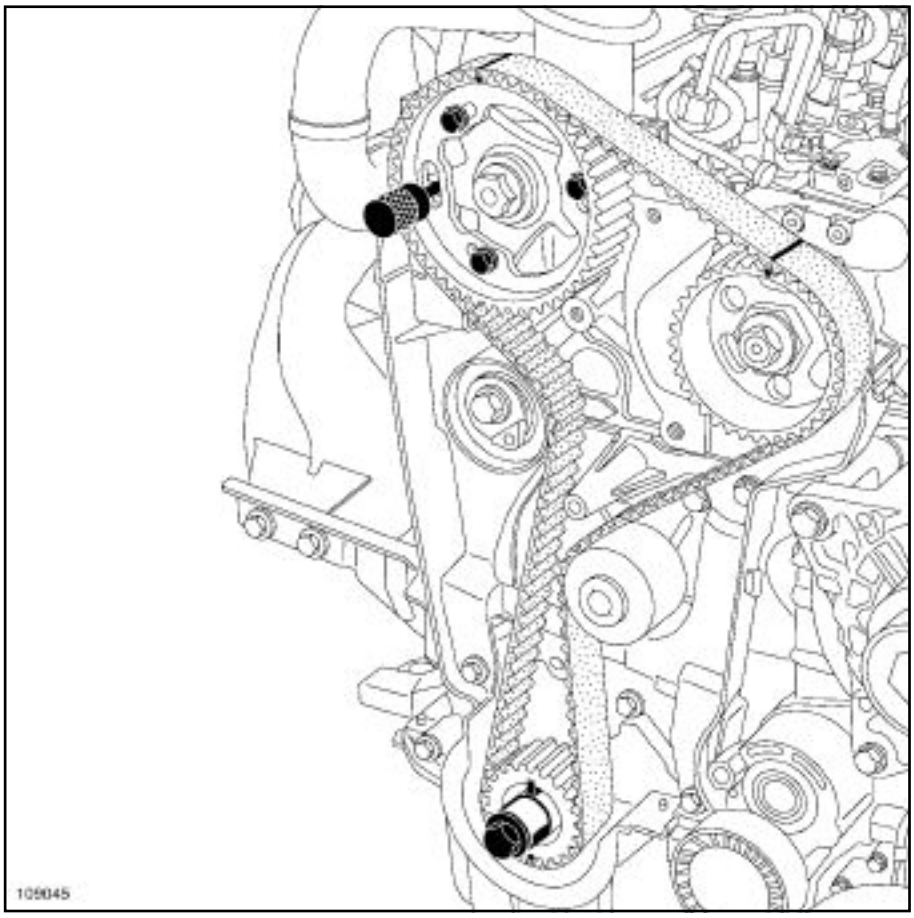

109045

Refit the bolt to the camshaft pulley wheel.

Tighten to torque **the camshaft pulley wheel bolts (14 ± 1.4 Nm)** .

Remove:

- the TDC setting pin **(Mot. 1489)** ,
- the set of 5 timing pins for the camshaft and crankshaft pulleys **(Mot. 1430)** .

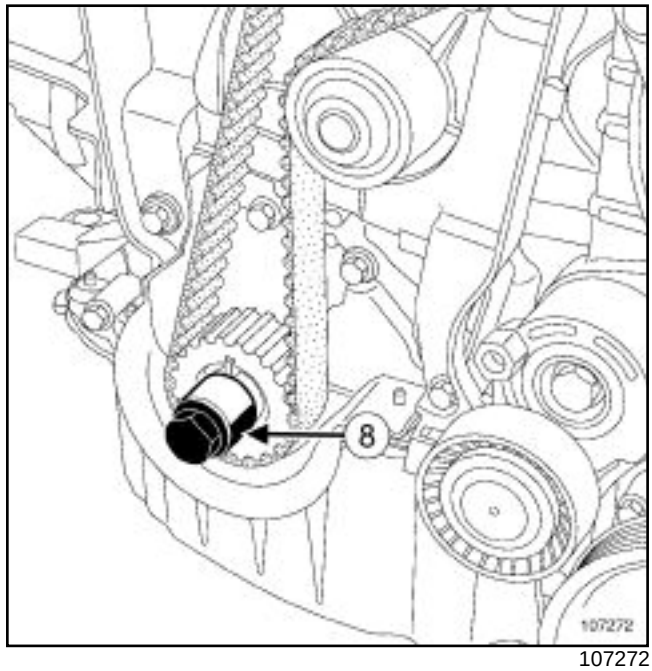

107272

Tighten the old crankshaft accessories pulley bolt fitted with a spacer (which does not cover the timing sprocket mark) (**8**) onto the crankshaft.

K9K, and 732 or 764

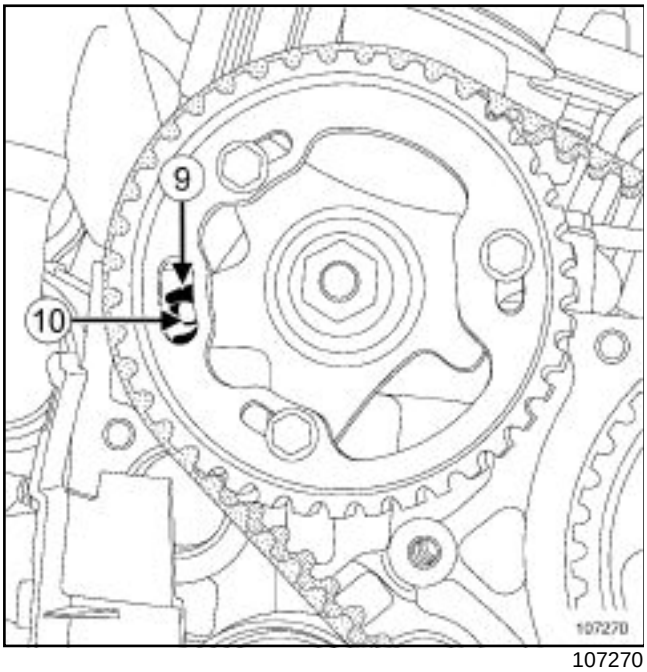

107270

Rotate the crankshaft clockwise through two revolutions (timing end), before the camshaft pulley hole (**9**) is opposite the cylinder head hole (**10**) .

Screw the TDC setting pin **(Mot. 1489)** into the cylinder block.

Bring the crankshaft slowly and smoothly against the TDC setting pin.

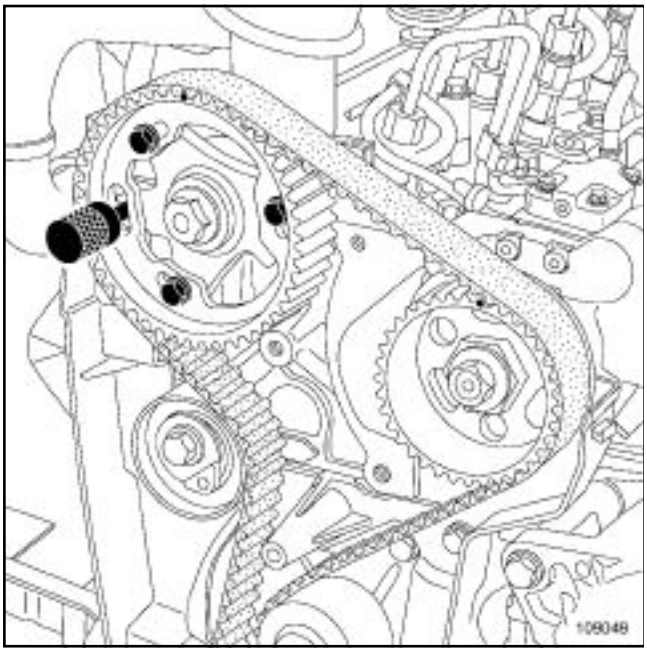

109049

Set the camshaft pulley using the **(Mot. 1430)** .

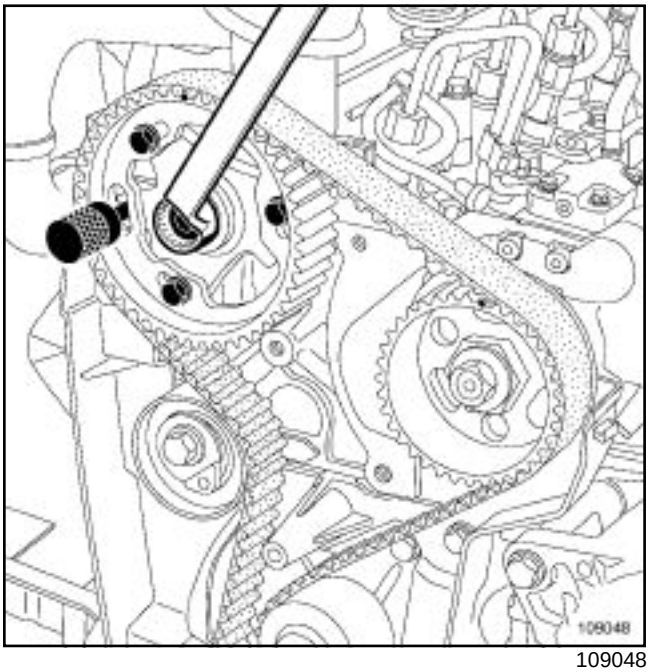

109048

If the pin **(Mot. 1430)** does not engage:

loosen the camshaft pulley wheel bolts by one turn at most,

Turn the camshaft pulley hub using an **18 mm** offset wrench to set the camshaft pulley hub timing.

Do not retighten the camshaft pulley wheel bolts.

K9K, and 732 or 764

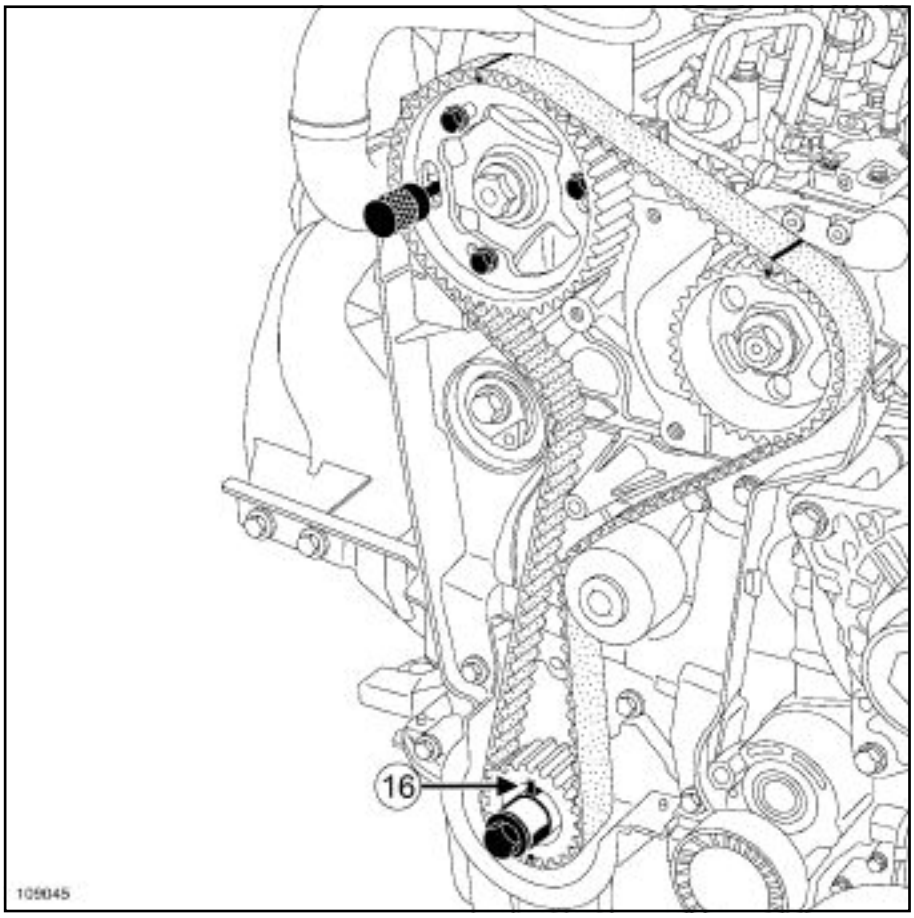

109045

Check that the crankshaft timing sprocket cotter (**16**) is positioned vertically at the top

Note:

After two turns, the tensioning roller index markers may be in two different positions.

The rotation of the tensioning roller eccentric cam depends on the position.

K9K, and 732 or 764

First position

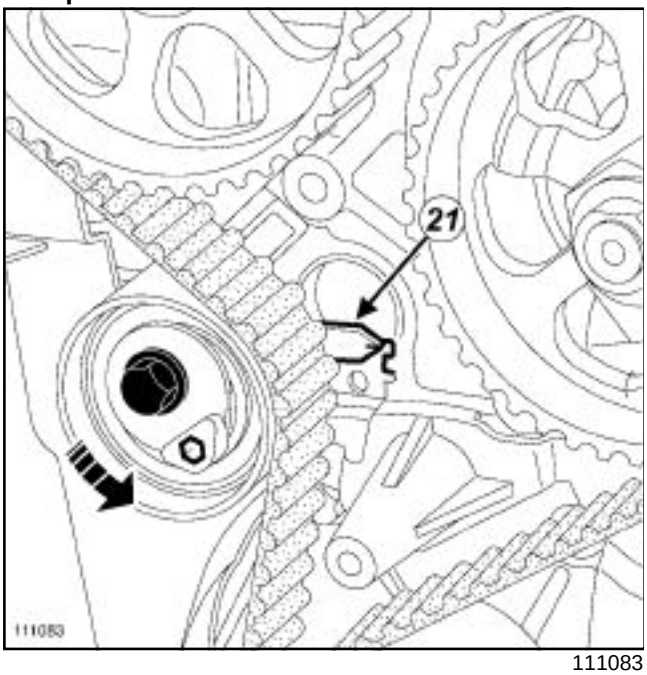

111083

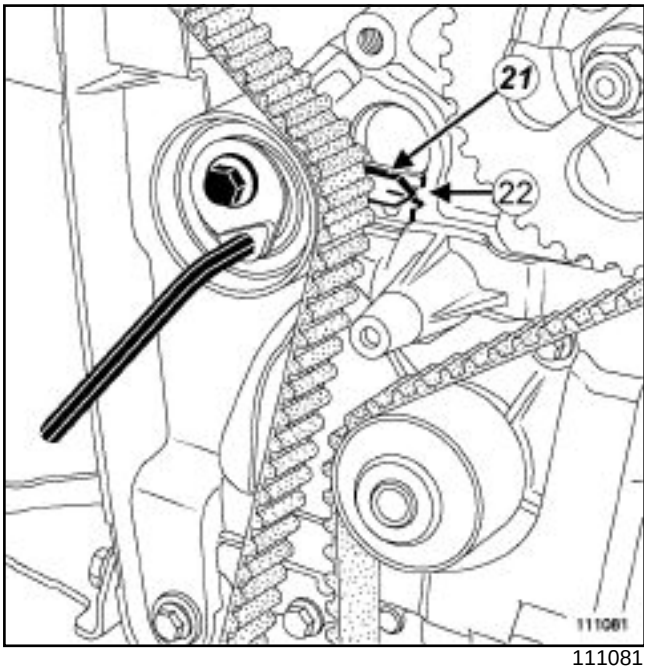

111081

Loosen the tensioning roller bolt by no more than one turn, holding it with a **6 mm** Allen key.

Gradually align the adjustable index (**21**) in the middle of the timing window (**22**) , turning the key anti-clockwise.

Second position

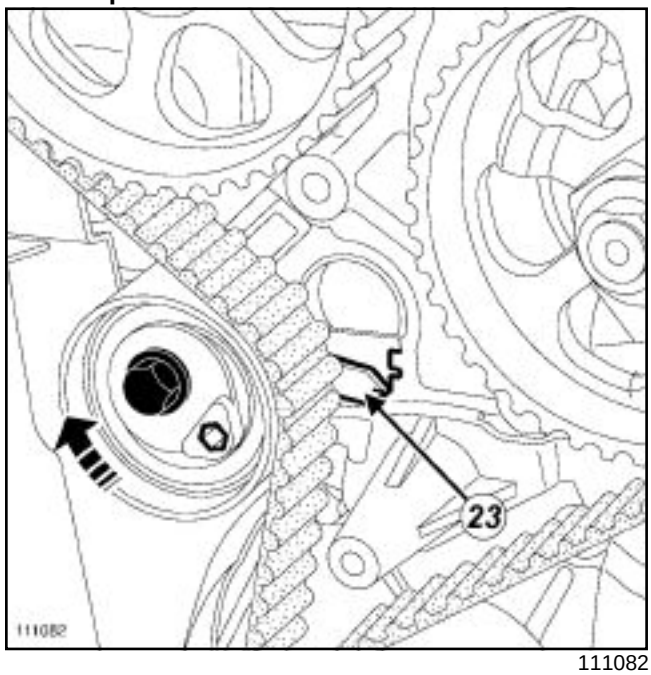

111082

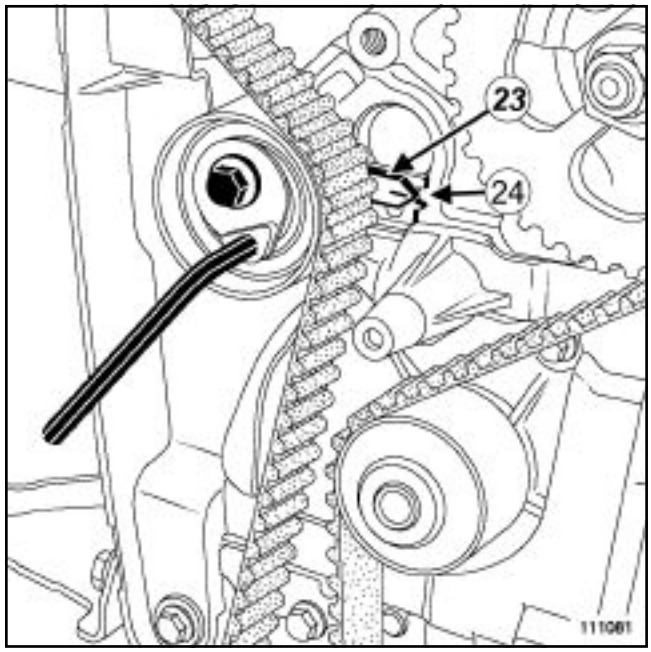

111081

Loosen the tensioning roller bolt by no more than one turn, holding it with a **6 mm** Allen key.

Gradually align the adjustable index (**23**) in the middle of the timing window (**24**) , turning the key clockwise.

Tighten to torque:

- **the tensioning roller bolt (27 ± 2.7 Nm)** ,
- **the camshaft pulley wheel bolts (14± 1.4 Nm)** .

Remove the following tools:

- TDC setting pin **(Mot. 1489)** ,

K9K, and 732 or 764

- the set of 5 timing pins for the camshaft and crankshaft pulleys **(Mot. 1430)** .

Rotate the crankshaft clockwise through two revolutions (timing end), before the camshaft pulley hole is opposite the cylinder head hole.

Screw the TDC setting pin **(Mot. 1489)** into the cylinder block.

Bring the crankshaft slowly and smoothly against the TDC setting pin.

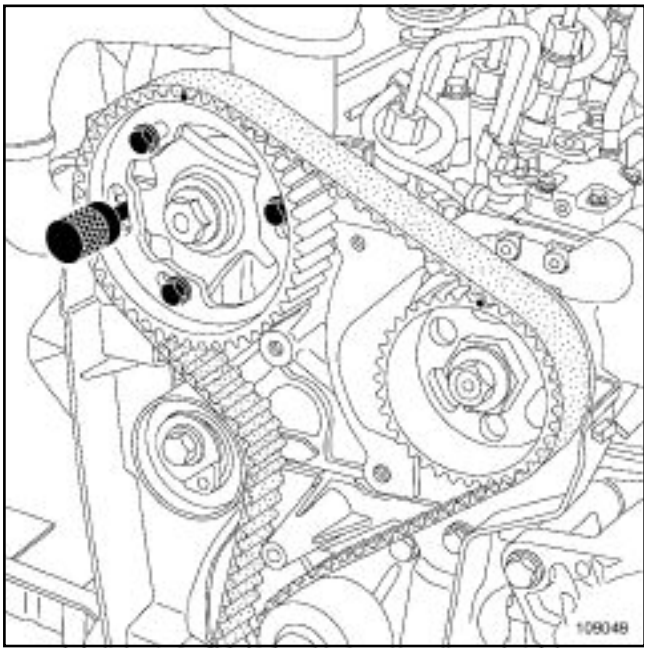

109049

Set the camshaft pulley using the **(Mot. 1430)** .

If this is not possible, repeat the timing belt refitting operation.

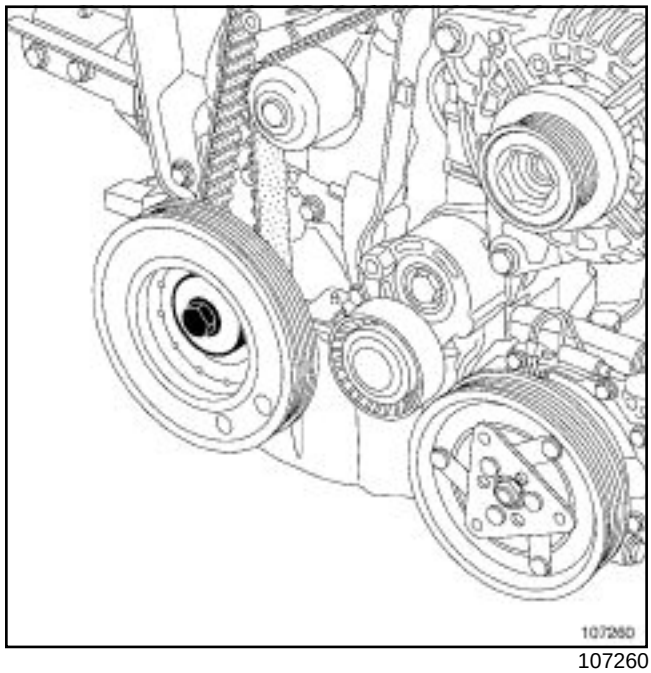

107260

Refit the accessories crankshaft pulley with a new bolt.

Tighten to torque and angle (crankshaft in contact with the TDC setting pin) **the crankshaft accessories pulley M14 bolt (120 ± 12 Nm + 95° ± 15°)** .

Remove the following tools:

- TDC setting pin **(Mot. 1489)** ,
- the set of 5 timing pins for the camshaft and crankshaft pulleys **(Mot. 1430)** .

Refit the TDC pin plug, coating the thread with **SILICONE ADHESIVE SEALANT** .

Tighten to torque the **TDC pin plug (20 ± 2 Nm)** .

K9K, and 732 or 764

K9K, and 732

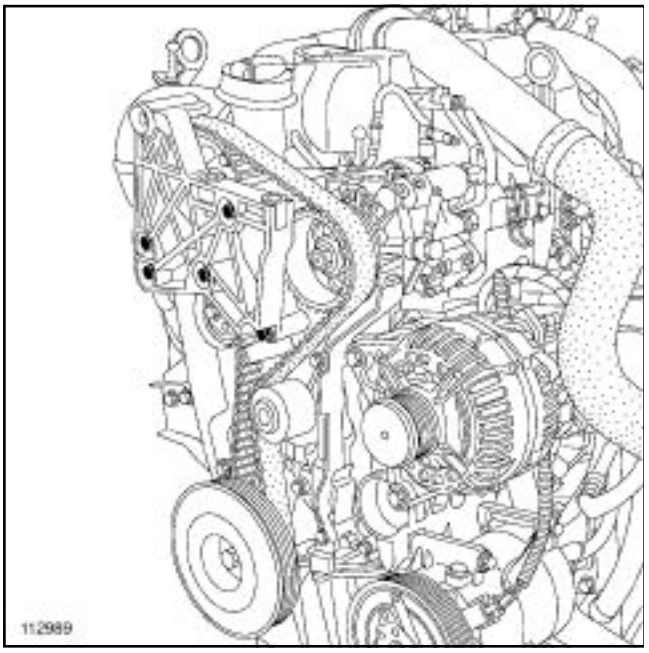

112989

Refit the cylinder head suspended mounting.

Tighten to torque the **cylinder head suspended mounting bolts (21 ± 2.1 Nm)** .

K9K, and 732 or 764

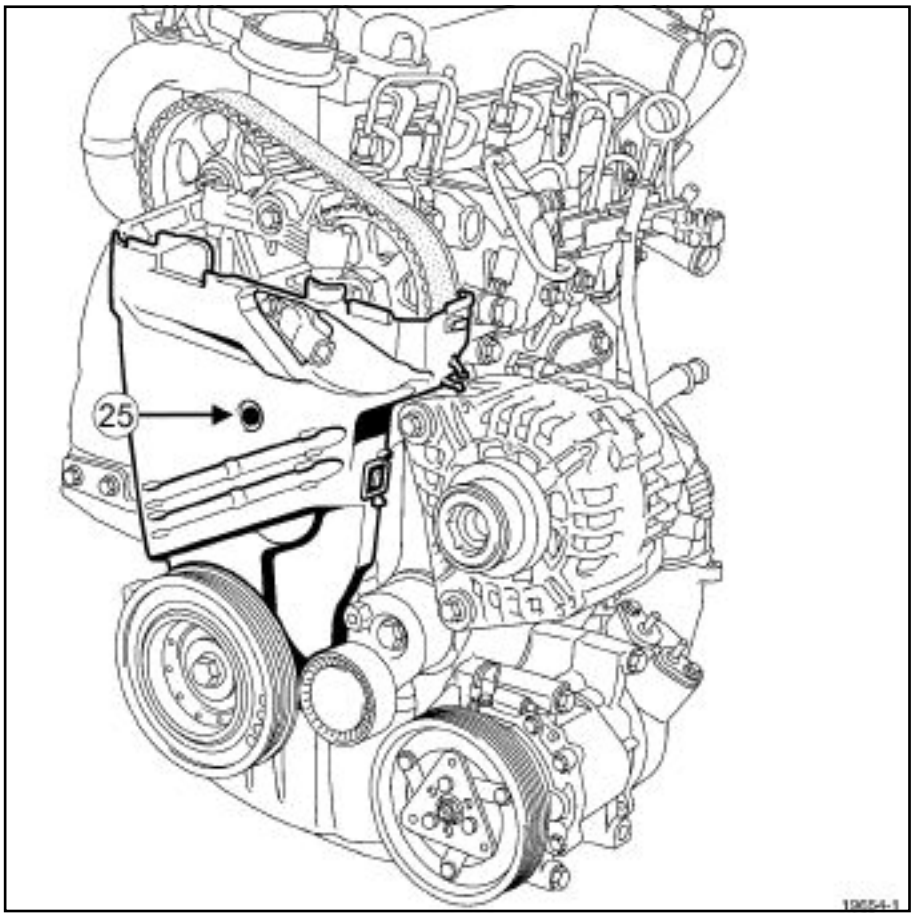

19654-1

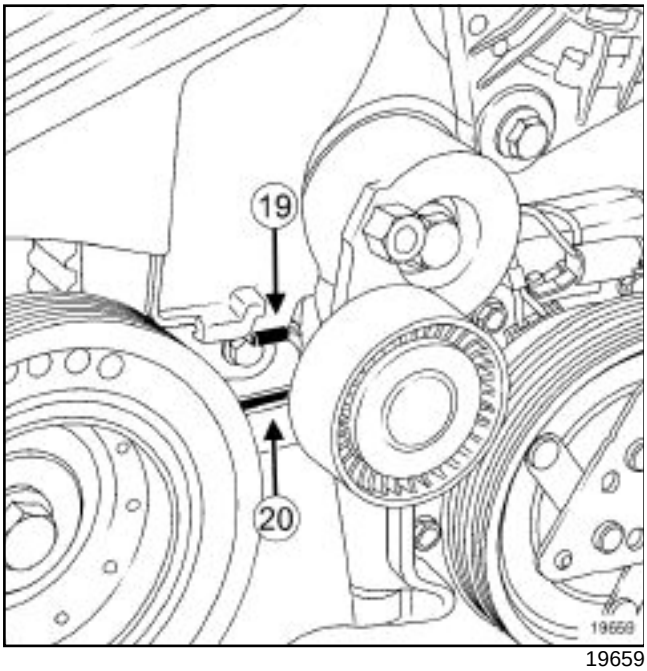

19659

Refit:

- the lower timing cover, positioning the tab (**19**) in the inner timing cover hole (**20**) ,
- the timing cover plastic bolt (**25**) .

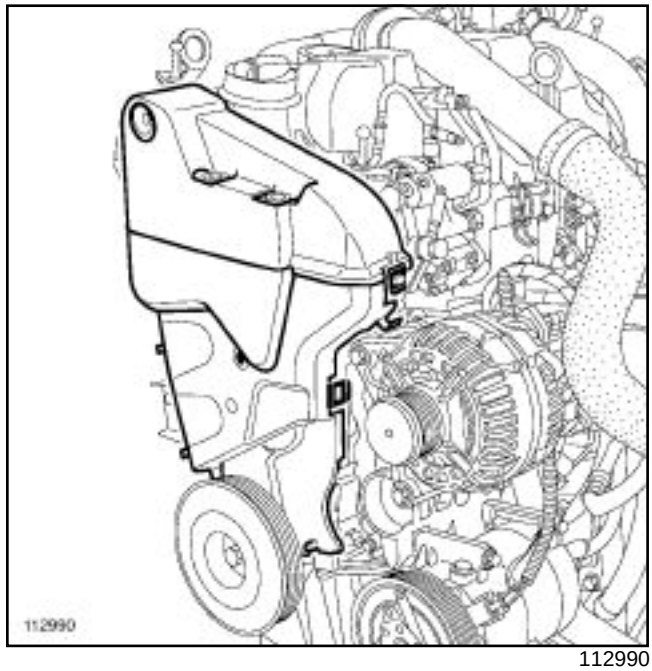

112990

Refit the upper timing cover.

K9K, and 732 or 764

K9K, and 764

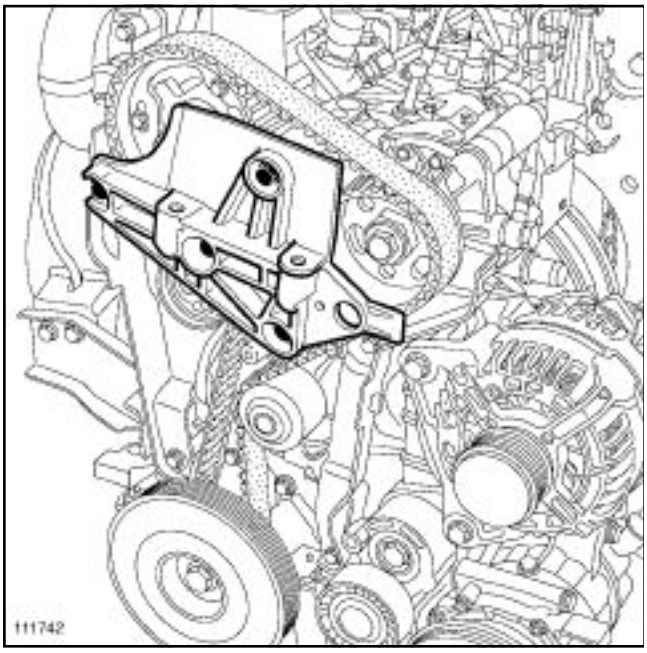

111742

Refit the cylinder head suspended mounting.

Tighten to torque the **cylinder head suspended mounting bolts (21 ± 2.1 Nm)** .

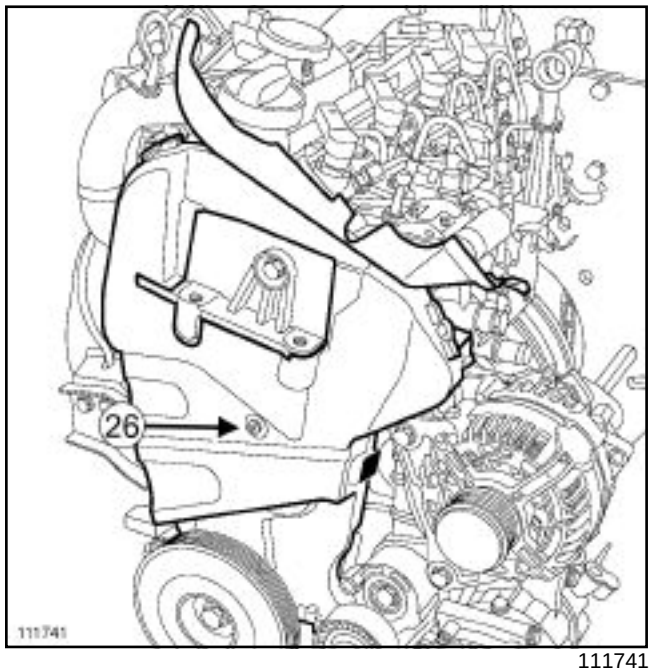

111741

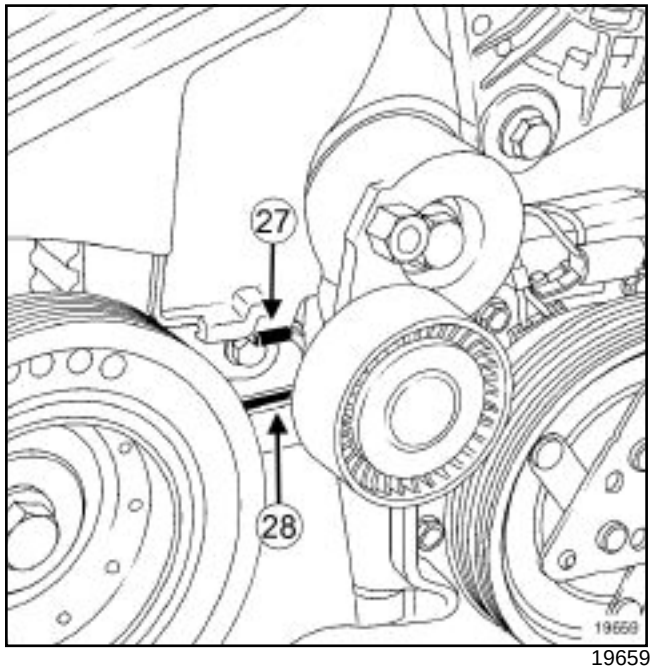

19659

Refit:

- the timing cover, positioning the tab (**27**) in the inner timing cover hole (**28**) ,
- the timing cover plastic bolt (**26**) .

RENAULT

Technical Note 6008A

XXXX

SUMMARY

OF ENGINE IMMOBILISER SYSTEMS

This note cancels and replaces Technical Note 3474A

77 11 329 022 **NOVEMBER 2003** **EDITION ANGLAISE**

"The repair methods given by the Manufacturer in this document are based on the technical specifications current when it was prepared.

They may be modified as a result of changes introduced by the Manufacturer in the production of the various components and accessories from which his vehicles are constructed."

All copyrights reserved by RENAULT.

Copying or translating, in part or in full, of this document or use of the service part reference numbering system is forbidden without the prior written authority of RENAULT.

© RENAULT 2003

ENGINE IMMOBILISER
Summary table

Summary of engine immobiliser systems and their main characteristics:
– Infrared remote control with fixed code for petrol engines,
– Infrared remote control with fixed code for diesel engines,
– Infrared remote control with rolling code for petrol engines,
– Infrared remote control with rolling code for diesel engines,
– KEY for petrol engines (without infrared remote control),
– KEY for diesel engines (without infrared remote control),
– KEY and infrared remote control with rolling code for petrol/diesel engines,
– Coded engine immobiliser (V2),
– Coded engine immobiliser (V3).

REMINDER
Follow the procedure given in Technical Note **3315E** to obtain the troubleshooting and repair codes.

	INFRARED REMOTE CONTROL WITH FIXED CODE FOR PETROL ENGINES (7 keys)			
	1st Generation infrared remote control fixed code (V1)**		1st Generation infrared remote control timed fixed code (V1T)	
VEHICLES	**from**	**note**	**from**	**note**
CLIO	07/94	2197	10/94	2238
R 19	05/93	2171	10/94	2238
R 21	01/92	1939	-	-
LAGUNA	02/94	Workshop Repair Manual 307	09/94	2238
SAFRANE	01/93	1923	10/94	2238
SPECIAL NOTES	↓		↓	
CODE CARD	yes		yes	
FAULT FINDING TOOL	no		no	
IDENTIFICATION	-		-	
M E R A *	no		15 min	
RED WARNING LIGHT	no		no	
MANUAL CODE	Trip Computer button		Trip Computer button	
PROGRAMMING	no		no	
RESYNCHRONISING REMOTE CONTROLS	no		no	
TROUBLESHOOTING	↓		↓	
PROCEDURE IN EVENT OF ENGINE IMMOBILISER SYSTEM FAILURE (remote control, infrared receiver or decoder unit)	The customer has the code card. The procedure for entering the code is in the instructions. The customer can rectify the fault without help.		The customer has the code card. The procedure for entering the code is in the instructions. The customer can rectify the fault without help.	

* Automatic start after switching the ignition off.

** For infrared remote control engine immobilisers with fixed codes, only the timed decoder unit (V1T) is available as a spare part.

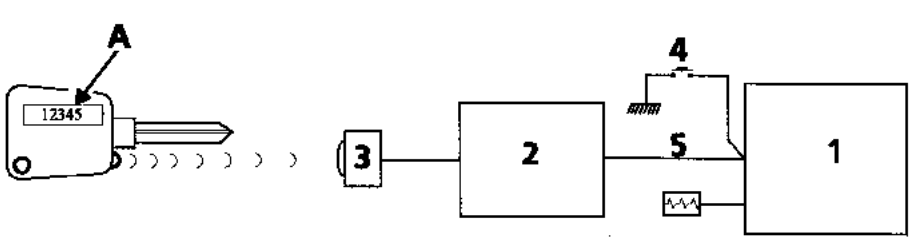

PRN8204

1 Injection computer
2 Decoder unit
3 Infrared receiver
4 Trip Computer button
5 Coded line
A Example of marking

	INFRARED REMOTE CONTROL ENGINE IMMOBILISER WITH FIXED CODE FOR DIESEL ENGINES (4 keys)			
	1st Generation infrared remote control fixed code (V1)**		1st Generation infrared remote control timed fixed code (V1T)	
VEHICLES	**from**	**note**	**from**	**note**
LAGUNA	07/94	2136	09/94	2238
SAFRANE	05/93	1952	09/94	2238
SPECIAL NOTES	↓		↓	
CODE CARD	no		no	
FAULT FINDING TOOL	no		no	
IDENTIFICATION	-		-	
M E R A *	no		15 min	
RED WARNING LIGHT	no		no	
MANUAL CODE	none		none	
PROGRAMMING	no		no	
RESYNCHRONISING REMOTE CONTROLS	no		no	
MARKING	5 digits		5 digits	
TROUBLESHOOTING	↓		↓	
PROCEDURE IN EVENT OF ENGINE IMMOBILISER SYSTEM FAILURE (remote control, infrared receiver or decoder unit)	No procedure. Direct feed to electrical solenoid (+12 V).		No procedure. Direct feed to electrical solenoid (+12 V).	

* Automatic start after switching the ignition off.

** For infrared remote control engine immobilisers with fixed codes, only the timed decoder unit (V1T) is available as a spare part.

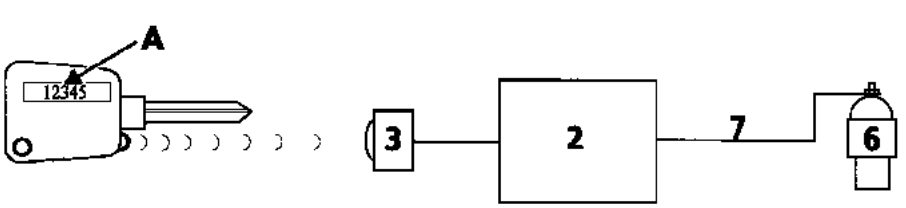

2 Decoder unit
3 Infrared receiver
6 Electrical solenoid
7 + After ignition after infrared remote control
A Example of marking

PRN8205

	INFRARED REMOTE CONTROL ENGINE IMMOBILISER WITH ROLLING CODE FOR PETROL ENGINES (7 keys)							
	1st Generation infrared remote control rolling code (V1 ')				2nd Generation infrared remote control rolling code (V2)			
VEHICLES	**fitted**	**from**	**note**	**additional notes**	**fitted**	**from**	**note**	**additional notes**
TWINGO	-	-	-	-	X (a)	01/95	2330	2377/2751
EXPRESS	X (b)	04/95	2407	2784/2914	X (b)	04/95	2407	2784/2914
CLIO	X (a) or (b)	04/95	2376	2753 / 2784 / 2914	X (b)	01/96	2497	2784/2914
R 19	X (a)	03/95	2320	2378/2914	-	-	-	-
MEGANE	-	-	-	-	X (c)	11/95	Workshop Repair Manual 312	2733/3315
LAGUNA	X (a)	01/95	2324	2914	X (b)	05/95	2324	2910/2914
SAFRANE	X (a)	02/95	2300	2379/2914	-	-	-	-
ESPACE (J63)	X (b)	04/95	2338	2463/2914	-	-	-	-
TRAFIC	X (b)	10/95	2489	2784/2914	-	-	-	-
SPECIAL NOTES	↓				↓			
CODE CARD	no				no			
FAULT FINDING TOOL	yes				yes (except TWINGO)			
IDENTIFICATION	no. 39				(a) no. 39 / (b) no. 45			
M E R A *	10 min**				10 min**			
RED WARNING LIGHT	no (except ESPACE (J63) and some CLIOs				yes			
MANUAL CODE	(a) Trip Computer / (b) button central door locking or fault finding tool				(a) Trip Computer / (b) button central door locking or fault finding tool / (c) central door locking			
PROGRAMMING	yes				yes			
RESYNCHRONISING REMOTE CONTROLS	yes				yes			
MARKING	7 characters: 1st = P, V or R				(a) 7 characters: 1st = W (b) 7 characters: 1st = P, V or R (c) 5 characters: 1st = S			
TROUBLESHOOTING	↓				↓			
PROCEDURE IN EVENT OF ENGINE IMMOBILISER SYSTEM FAILURE (remote control, infrared receiver or decoder unit).	The customer does not have the code card. The code must be entered by the repair agent. Do not inform the customer of the code***.				The customer does not have the code card. The code must be entered by the repair agent. Do not inform the customer of the code***.			

* Automatic start after switching the ignition off.

** **1 minute** for the UK and Belgium.

*** The procedure for the ESPACE (J63) is in the instructions. The code must be entered by the repair agent. Do not inform the customer of the code.

V1' INFRARED REMOTE CONTROL

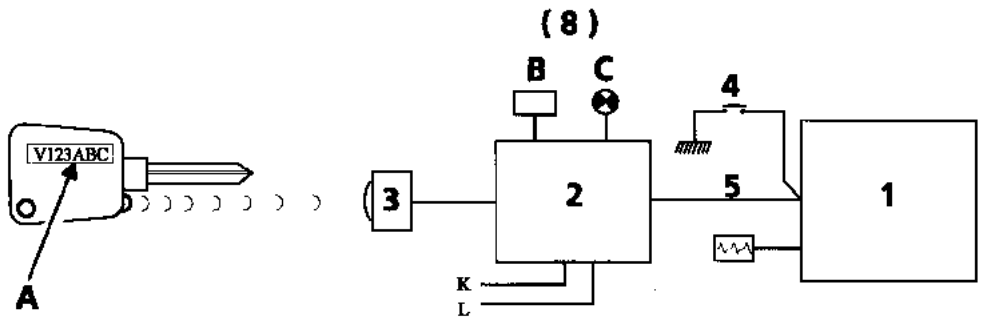

PRN8206

A	Example of marking	or P123ABC or R123ABC	**1**	Injection computer
			2	Decoder unit
			3	Infrared receiver
			4	Trip Computer button (except ESPACE (J63))
			5	Coded line
			8	Only on ESPACE (J63) and some CLIOs
			B	Electric door lock button (central door locking)
			C	Red engine immobiliser warning light

V2 INFRARED REMOTE CONTROL

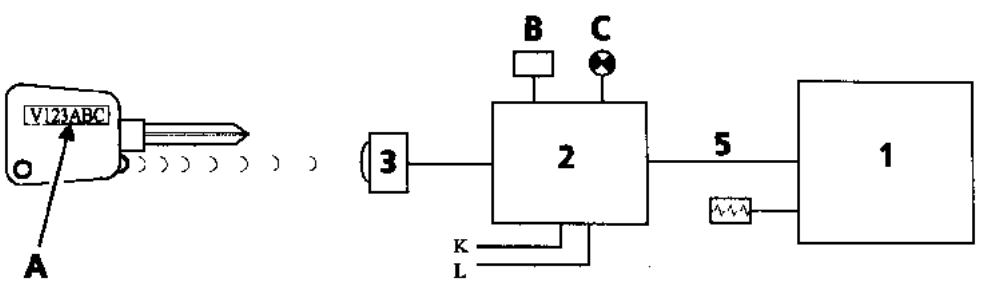

PRN8207

A	Example of marking	or P123ABC or R123ABC or W123ABC or S12AB	**1**	Injection computer
			2	Decoder unit
			3	Infrared receiver
			5	Coded line
			B	Electric door lock button (central door locking)
			C	Red engine immobiliser warning light

	KEY RECOGNITION ENGINE IMMOBILISER SYSTEM FOR PETROL ENGINES (WITHOUT INFRARED REMOTE CONTROL) (7 keys)							
	1st Generation KEY recognition (V1)				2nd Generation KEY recognition (V2)			
VEHICLES	**fitted**	**from**	**note**	**additional notes**	**fitted**	**from**	**note**	**additional notes**
TWINGO	-	-	-	-	X (a) or (b)	01/95	2330	2751/3022
CLIO	X	04/95	2376	2753	X (d)	01/96	2497	-
KANGOO	-	-	-	-	X (b)	10/97	Workshop Repair Manual 325	-
MEGANE	-	-	-	-	X (d)	11/95	Workshop Repair Manual 312	2733
LAGUNA	X	11/95	2517	-	X (d)	11/95	2517	-
MASTER (XD0)	-	-	-	-	X (b)	10/97	Workshop Repair Manual 323	-
SPECIAL NOTES	↓				↓			
CODE CARD	no				no			
FAULT FINDING TOOL	yes				yes			
IDENTIFICATION	no. 38				(a) and (d) no. 38 / (b) no. 56			
M E R A *	10 s				10 s			
RED WARNING LIGHT	no				yes			
MANUAL CODE	Trip Computer button or MS 511-01				button: (a) Trip Computer / (d) code or fault finding tool / (b) central door locking			
PROGRAMMING	yes				yes			
RESYNCHRONISING REMOTE CONTROLS	no				no			
MARKING	8 characters: 1st = Y				8 characters: 1st = (a) and (d) Y / (b) E or A			
TROUBLESHOOTING	↓				↓			
PROCEDURE IN EVENT OF ENGINE IMMOBILISER SYSTEM FAILURE (key head, antenna/ transponder ring or decoder unit).	The customer does not have the code card. The procedure for entering the code is not in the instructions. The code must be entered by the repair agent. Do not inform the customer of the code.				The customer does not have the code card. (a) and (d) The procedure for entering the code is in the instructions (except MEGANE without electric door lock button). The code is entered by the repair agent. The customer is not informed of the code (except MEGANE without electric door lock button). (b) The procedure for entering the code is not in the instructions (code entry by fault finding tool only). The code must be entered by the repair agent. Do not inform the customer of the code.			

* Automatic start after switching the ignition off.

V1 KEY

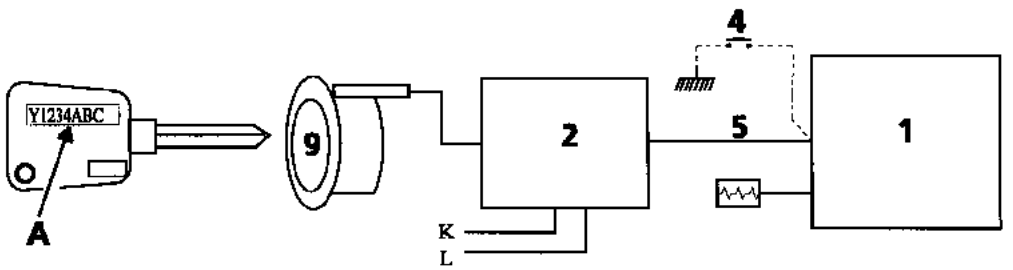

PRN8208

A Example of marking

1 Injection computer
2 Decoder unit
4 Trip Computer button (if fitted)
5 Coded line
9 Antenna/transponder ring

V2 KEY

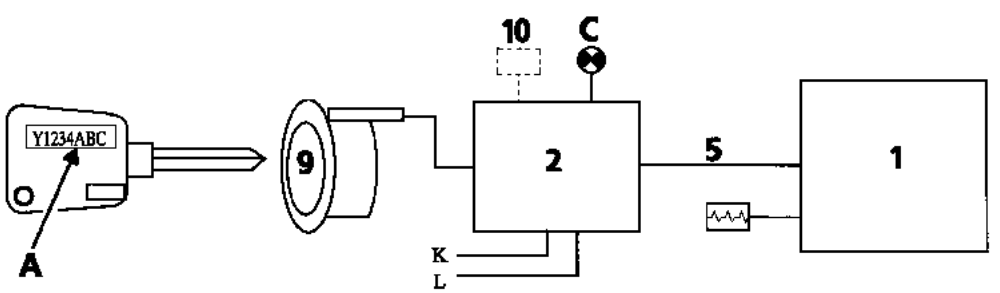

PRN8209

A Example of marking
C Red engine immobiliser warning light

1 Injection computer
2 Decoder unit
5 Coded line
9 Antenna/transponder ring
10 Code button

	INFRARED REMOTE CONTROL ENGINE IMMOBILISER SYSTEMS WITH ROLLING CODE OR KEY RECOGNITION FOR DIESEL ENGINES (4 or 7 keys according to coded solenoid valve shielding)							
	2nd Generation infrared remote control rolling code (V2)				2nd Generation KEY recognition (V2)			
VEHICLES	**fitted**	**from**	**note**	**additional notes**	**fitted**	**from**	**note**	**additional notes**
EXPRESS	X (a)	01/96	2474	2507/2568/2784	-	-	-	-
KANGOO	-	-	-	-	X (b)	10/97	Workshop Repair Manual 325	2990
CLIO	X (a)	12/96	2474	2507/2568/2784	X (d)	12/95	2474	2507/2547/ 2568/2572/2990
MEGANE	X (b)	01/96	Work-shop Repair Manual 312	2507/2547/2568/ 2733	X (d)	01/96	Workshop Repair Manual 312	2507/2547/ 2572/2568/ 2733/2990
LAGUNA	X (a)	09/95	2474	2507/2568	X (d)	11/95	2474	2507/2568/ 2572/2990
SAFRANE	X (a)	10/95	2474	2507/2568/2572/ 2990	-	-	-	-
ESPACE (J63)	X (a)	09/95	2474	2507/2568/2572	-	-	-	-
TRAFIC	X (a)	01/96	2474	2507/2572/2784/ 2990	-	-	-	-
MASTER (XD0)	-	-	-	-	X (b)	10/97	Workshop Repair Manual 323	2990
SPECIAL NOTES	↓				↓			
CODE CARD	no				no			
FAULT FINDING TOOL	yes				yes			
IDENTIFICATION	(a) no. 39 / (b) no. 45				(d) no. 38 / (b) no. 56			
M E R A *	10 s**				10 s			
RED WARNING LIGHT	yes				yes			
MANUAL CODE	(a) electric door lock button or fault finding tool/ (b) central door locking				(d) code button or fault finding tool/ (b) fault finding tool			
PROGRAMMING	yes				yes			
RESYNCHRONISING REMOTE CONTROLS	yes (with code)				no			
MARKING	(a) 7 characters: 1st = P, V or R (b) 5 characters: 1st = S				8 characters: 1st = (d) Y/(b) E or A			

TROUBLESHOOTING	↓	↓
PROCEDURE IN EVENT OF ENGINE IMMOBILISER SYSTEM FAILURE (remote control or key head, infrared receiver or antenna/ transponder ring or decoder unit)	The customer does not have the code card. The procedure for entering the code is in the instructions. The code must be entered by the repair agent. Do not inform the customer of the code.	The customer does not have the code card. (d) The procedure for entering the code is in the instructions (except MEGANE without electric door lock button). The code is entered by the repair agent. The customer is not informed of the code (except MEGANE without electric door lock button). (b) The procedure for entering the code is not in the instructions (code entry by fault finding tool only). The code must be entered by the repair agent. Do not inform the customer of the code.

* Automatic start after switching the ignition off.

** 1 minute for the UK and Belgium.

Infrared remote control with rolling code

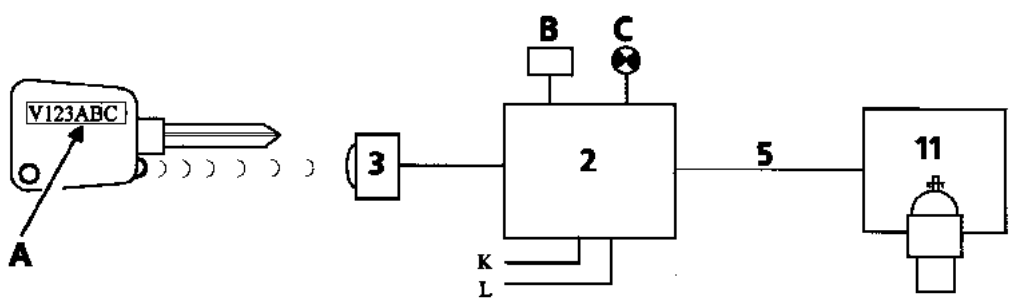

PRN8210

A	Example of marking or P123ABC or R123ABC or S12AB	**B**	Electric door lock button (central door locking)	**2**	Decoder unit
		C	Red engine immobiliser warning light	**3**	Infrared receiver
				5	Coded line
				11	Coded solenoid valve

KEY recognition

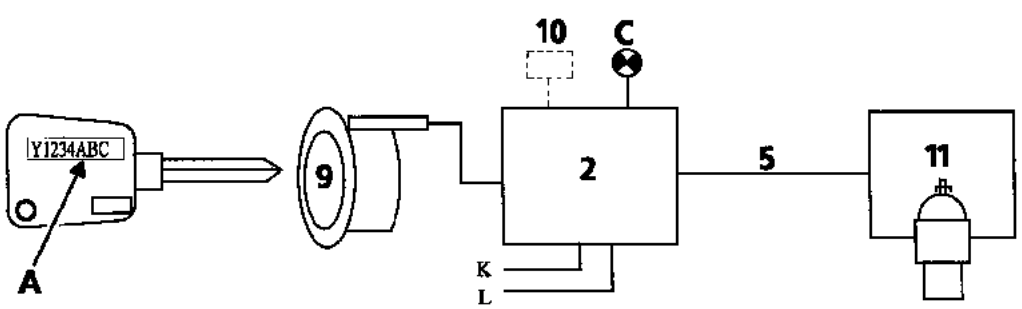

PRN8211

A	Example of marking	**2**	Decoder unit	**10**	Code button
C	Red engine immobiliser warning light	**5**	Coded line	**11**	Coded solenoid valve
		9	Antenna/transponder ring		

	INFRARED REMOTE CONTROL AND KEY ENGINE IMMOBILISER SYSTEMS WITH ROLLING CODE FOR PETROL/DIESEL ENGINES (7 keys)							
	2th Generation KEY box and infrared remote control separated (V2)				2nd Generation single unit (dual-functional) (V2) or decoder unit			
VEHICLES	**fitted**	**from**	**note**	**additional notes**	**fitted**	**from**	**note**	**additional notes**
TWINGO	-	-	-	-	X (b)	12/99	3361	3429/3546/3560
CLIO II	-	-	-	-	X (b)	03/98	Workshop Repair Manual 337	2065/3018/ 3243/3248/ 3391/3532
KANGOO	-	-	-	-	X (b)	10/97	Workshop Repair Manual 325	3112/3118/ 3391/3546/3560
LAGUNA	-	-	-	-	X (a)	01/97	2725	2958
SAFRANE	X	09/96	2624	2728	X (a)	01/97	2725	2878/2958
ESPACE (JE0)	X	09/96	MR315	2754	X (a)	01/97	2754	3028/3057/ 3101/3441/3623
MASTER (XD0)	-	-	-	-	X (b)	10/97	Workshop Repair Manual 323	3083/3061/ 3118/3546/3560
SPECIAL NOTES	↓				↓			
CODE CARD	no				no			
FAULT FINDING TOOL	yes				yes			
IDENTIFICATION	KEY decoder unit no. 38/infrared remote control no. 39				no. 56			
M E R A *	10 s				10 s			
RED WARNING LIGHT	yes				yes			
MANUAL CODE	Electric door lock button or fault finding tool				(a) electric door lock button or fault finding tool / (b) fault finding tool			
PROGRAMMING	yes				yes			
RESYNCHRONISING REMOTE CONTROLS	Infrared remote control: yes (with code or short-cut) KEY: no				Infrared remote control: yes (short-cut) KEY: no			
MARKING	8 characters: 1st = Z				8 characters: 1st = (a) Z / (b) E or A			
TROUBLESHOOTING	↓				↓			
PROCEDURE IN EVENT OF ENGINE IMMOBILISER SYSTEM FAILURE (key head, antenna/ transponder ring or decoder unit).	The customer does not have the code card. The procedure for entering the code is in the instructions. The code must be entered by the repair agent. Do not inform the customer of the code. **WARNING** On the first vehicles (without resynchronising shortcuts), the security code is different from the synchronising code.				The customer does not have the code card. (a) The procedure for entering the code is in the instructions. The code must be entered by the repair agent. Do not inform the customer of the code. (b) The procedure for entering the code is not in the instructions (code entry by XR25 only). The code must be entered by the repair agent. Do not inform the customer of the code.			

* Automatic start after switching the ignition off

Separate KEY/infrared remote control decoder units

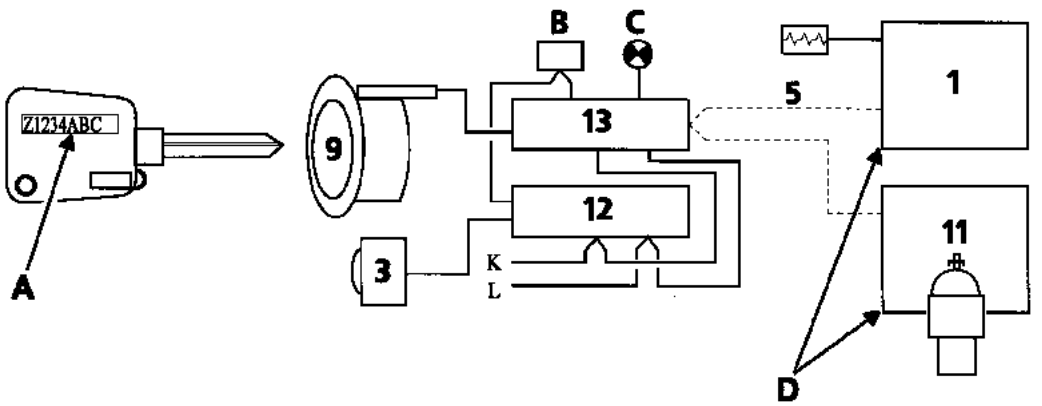

PRN8212

A Example of marking
B Electric door lock button (central door locking)
C Red engine immobiliser warning light
D Injection computer (**1**) or the coded solenoid valve (**11**).

1 Injection computer
3 Infrared receiver
5 Coded line
9 Antenna/transponder ring
11 Coded solenoid valve
12 Infrared remote control decoder
13 KEY decoder

Dual-function unit, single decoder unit, multi-timer unit* or BII**

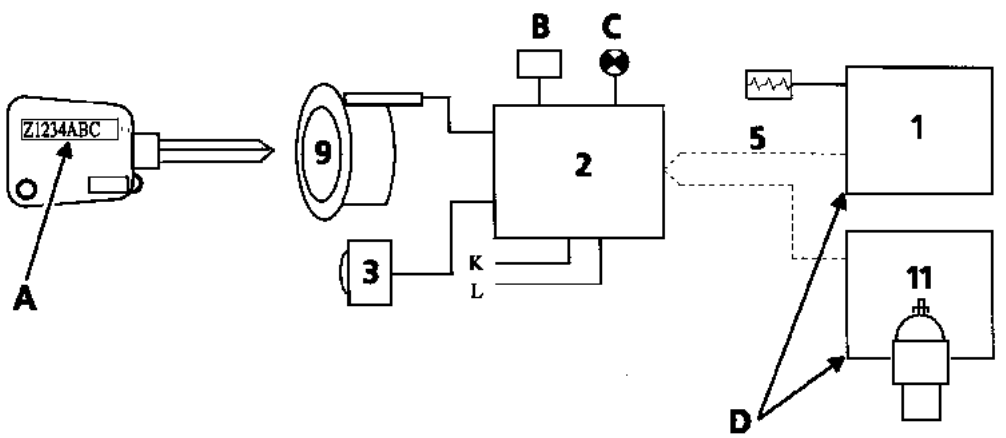

PRN8213

A Example of marking
B Electric door lock button (central door locking)
C Red engine immobiliser warning light
D Injection computer (**1**) or the coded solenoid valve (**11**).

1 Injection computer
2 KEY/infrared remote control decoder unit
3 Infrared or radio frequency remote control receiver
5 Coded line
9 Antenna/transponder ring
11 Coded solenoid valve

* Multi-timer unit
** Intelligent connection unit

NOTE: On some Twingos, the remote control receiver is integrated in the antenna/transponder ring (**C**). It functions in the same way as the key recognition engine immobiliser system. See Technical Note **3361A**.

	CODED IMMOBILISERS WITH KEY RECOGNITION SYSTEM (V2)		
VEHICLES	**from**	**note**	**additional notes**
MEGANE	09/98	3060	3080/3088/3089/3156/3228/3355/3464/3668
AVANTIME	10/02	Workshop Repair Manual 350 / Workshop Repair Manual 352	-
SPECIAL NOTES	↓		
CODE CARD	no		
FAULT FINDING TOOL	yes		
IDENTIFICATION	64		
M E R A *	10 s		
RED WARNING LIGHT	yes		
MANUAL CODE	Fault finding tool		
PROGRAMMING	yes		
RESYNCHRONISING REMOTE CONTROLS	Remote control: yes KEY: no		
MARKING	None		
TROUBLESHOOTING	↓		
PROCEDURE IN EVENT OF ENGINE IMMOBILISER SYSTEM FAILURE (key head, antenna/ transponder ring or decoder unit).	The security code no longer exists but has been replaced by a repair code allocated to the vehicle for life during manufacture. This repair code is required in after-sales in order to: – add or replace a key, – de-register one or more keys, – replace a UCH or a decoder unit.		

* Automatic start after switching the ignition off.

WARNING
A complete set (decoder unit or UCH and key heads) cannot all be replaced at the same time, as the parts are sold uncoded.

ENGINE IMMOBILISER
Summary table

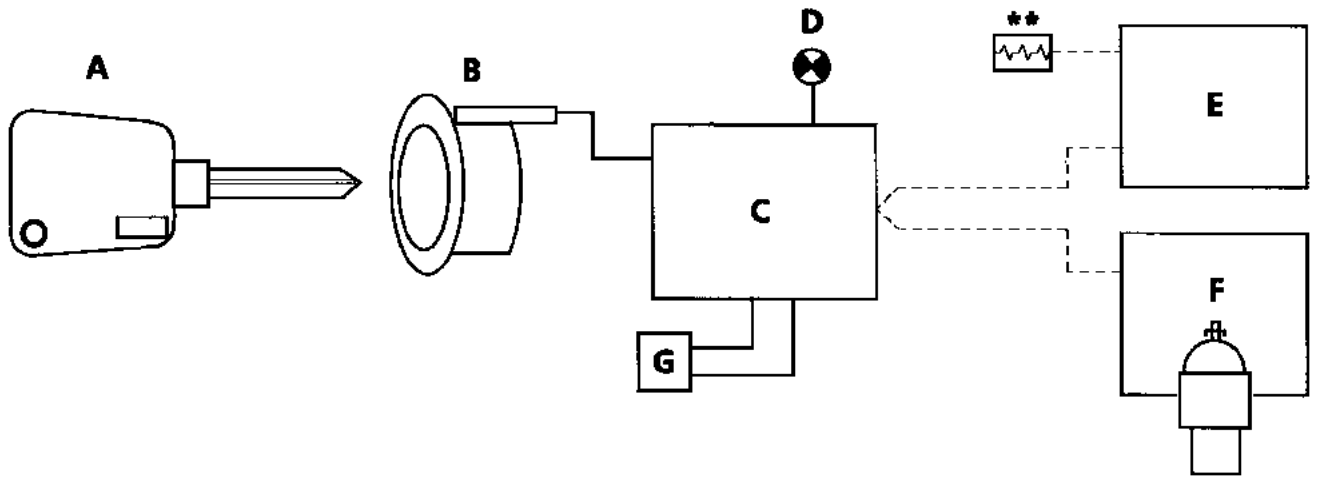

15357R

A Engine immobiliser key with or without remote control
B Engine immobiliser antenna/transponder ring
C Decoder unit or UCH (according to equipment)
D Red engine immobiliser warning light
E Injection computer (petrol or direct diesel injection)
F Diesel coded solenoid valve (without direct diesel injection)
G Diagnostic socket

** This warning light is not operational on all vehicles (see Technical Notes) **Wiring diagram**).

	CODED ENGINE IMMOBILISER SYSTEMS WITH KEY/CARD RECOGNITION SYSTEM (V3)		
VEHICLES	**from**	**note**	**additional notes**
LAGUNA II	01/00	Workshop Repair Manual 339 / Workshop Repair Manual 341	-
TRAFIC II	06/01	Workshop Repair Manual 342 / 344	-
CLIO II	06/01	Workshop Repair Manual 345/347/348	3561/3681
TWINGO (vehicles equipped with a UCH)	01/02	-	3594
KANGOO (multiplexed vehicles)	06/02	-	3629/3641/3643
KANGOO (phase II)	02/02	-	3732 (Provisional Technical Note)
MEGANE II	10/02	Workshop Repair Manual 364 / Workshop Repair Manual 366	-
SCENIC II	06/03	Workshop Repair Manual 370 / Workshop Repair Manual 372	-
VEL SATIS	02/02	Workshop Repair Manual 353 / Workshop Repair Manual 355	-
ESPACE IV	10/02	Workshop Repair Manual 361 / Workshop Repair Manual 363	-
MASTER (phase II)	06/03	-	3756
MASTER Propulsion (Mascott)	02/03	Workshop Repair Manual 356	-
SPECIAL NOTES	↓		
CODE CARD	no		
FAULT FINDING TOOL	yes		
IDENTIFICATION	-		
M E R A *	10 s		
RED WARNING LIGHT	yes		
MANUAL CODE	Fault finding tool		
PROGRAMMING	yes		
RESYNCHRONISING REMOTE CONTROLS	no		
MARKING	None		
TROUBLESHOOTING	↓		
PROCEDURE IN EVENT OF ENGINE IMMOBILISER SYSTEM FAILURE (card, card reader, electric steering column lock, UCH).	The security code no longer exists but has been replaced by a repair code allocated to the vehicle for life during manufacture. This repair code is required in after-sales in order to: ● adding or replacing RENAULT Cards or keys, ● deallocating one or more RENAULT Cards or keys, ● replace a UCH.		

* Automatic start after switching the ignition off.

IMMOBILISER WITH KEY/CARD RECOGNITION SYSTEM (V3)

Example: LAGUNA II

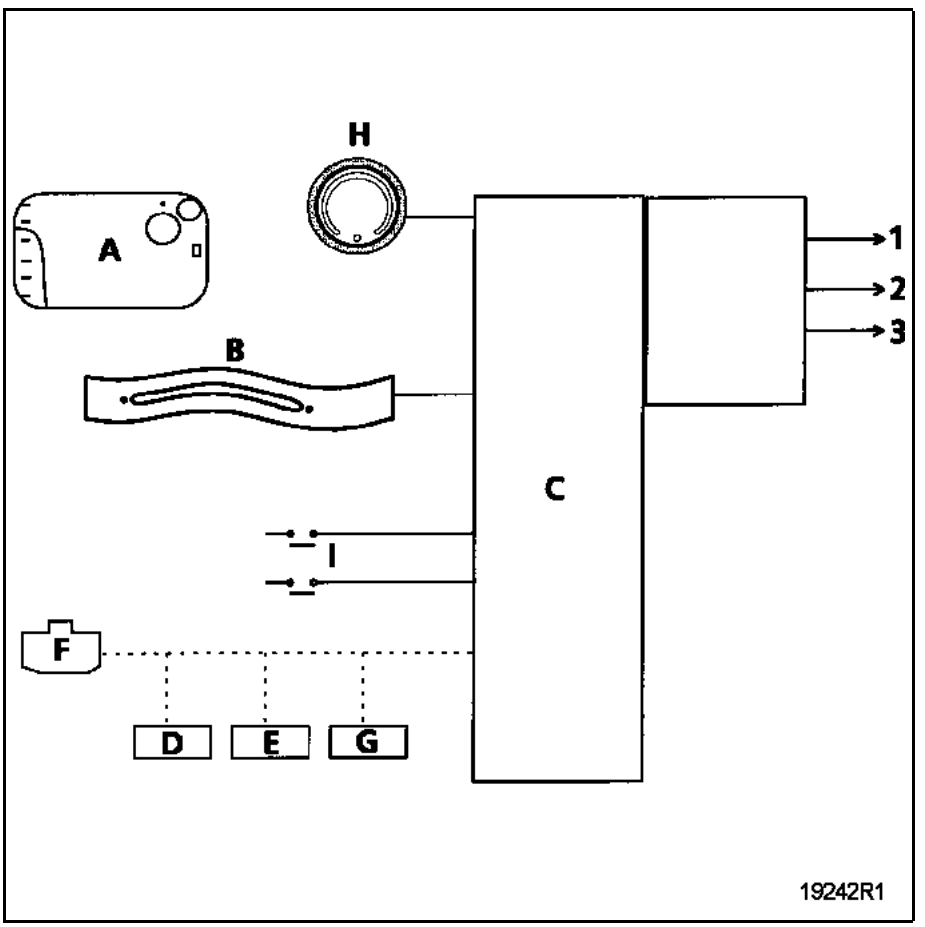

A RENAULT Card
B RENAULT Card reader containing the engine immobiliser receiver
C UCH and fuses and relays box
D Red engine immobiliser warning light (instrument panel)
E Injection computer (petrol or diesel)
F Electric steering column lock
G Diagnostic socket
H Starter push pressure button
I Clutch pedal and gearbox neutral position sensor

----- Multiplex connection
—— Wire connection

1 Position + accessories (servitude)
2 Position + after ignition
3 Starter motor supply

SUMMARY OF TECHNICAL NOTES

Number	Contents
1923	Infrared remote controlled engine immobiliser with alarm
1939	This note has been cancelled and replaced by Workshop Repair Manual **291** (Renault 21 discontinued)
1952	Infrared remote controlled engine immobiliser with alarm
2136	This note deals with special notes of Lagunas fitted with a coded solenoid valve
2171	This note has been cancelled and replaced by Workshop Repair Manual **293** (Renault 19 discontinued)
2197	This note contains information on special notes of the engine immobiliser system (unlocking of doors and starting authorisation controlled by infrared remote control)
2238	Engine immobiliser development, automatic start after **15 min**
2300	This note contains information on special notes on the infrared remote controlled engine immobiliser with rolling code fitted on the Safrane
2320	This note has been cancelled and replaced by Workshop Repair Manual **293** (Renault 19 discontinued)
2324	This technical note contains information on the infrared remote control engine immobiliser system 1st and 2nd generations on the Laguna
2330	This note contains information on Twingo engine immobiliser systems – Infrared remote controlled engine immobiliser system – Coded KEY immobiliser system
2338	This note contains information on special notes on the infrared remote controlled engine immobiliser with rolling code which is being fitted to the Espace range
2376	The infrared remote controlled system with rolling code and the coded KEY engine immobiliser system are both fully explained in this note
2377	This note contains the fault finding charts for the infrared remote controlled engine immobiliser system with rolling code and the coded KEY recognition system fitted on the Twingo range
2378	This note has been cancelled and replaced by Workshop Repair Manual **293** (Renault 19 discontinued)
2379	This note contains the fault finding charts for the infrared remote controlled engine immobiliser system with rolling code fitted on the Safrane range
2407	This note contains information on the infrared remote control engine immobiliser system 1st and 2nd generations, plus fault finding
2463	This note completes Technical Note **2338A** from March 1995. It contains the fault finding charts used for Espace owner customer complaints about engine starting faults, confirmed by the red engine immobiliser warning light located on the courtesy light console.
2474	This note contains information on the 2nd generation Bosch pump diesel engine immobiliser system – Infrared remote controlled engine immobiliser system – Coded KEY immobiliser system
2489	Infrared remote control engine immobiliser rolling code 1st generation for the Trafic

SUMMARY OF TECHNICAL NOTES

Number	Content
2497	This note contains information on the Bosch and Lucas petrol and diesel pump engine immobiliser systems for petrol and diesel engines
2507	This note is an erratum for note **2474** and Workshop Repair Manual **312**
2517	This note deals with coded KEY immobiliser systems – 1st generation – 2nd generation
2547	This note deals with special notes on diesel Lucas injection pumps fitted with a coded solenoid valve
2568	Methods of replacing electronics casing and coded solenoid valve assemblies fitted to the Bosch and Lucas injection pumps
2572	Unreliable security code or resynchronising not possible
2624	This note contains special notes on 2nd generation coded KEY immobiliser systems for the phase II Safrane
2725	This note has been cancelled and replaced by note **2958A**
2728	This Technical Note is a rectification of note **2624A**
2733	This note contains information on Mégane engine immobiliser system developments: withdrawal of security code entry button on vehicles with coded KEY immobiliser systems
2751	Bottom of the range Twingos can now be fitted with a new control bar with 12 indicator lights.
2754	This note deals with coded KEY and infrared remote control engine immobiliser systems fitted on the new Espace (JE0X)
2784	This note has been cancelled and replaced by note **2914A**
2878	Development of single decoder unit: Safranes are being fitted with new decoder units which can operate with either infrared transmitters or remote control
2901	Removal and refitting method for the load potentiometer advance solenoid valve and new shielding of the Lucas injection pump (DPCN) coded solenoid valves
2910	In order to improve this function, all vehicles with Valéo remote control for door locking are now to be fitted with an infrared transmitter with continuous transmission.
2914	This note contains information on the development of decoder units on 1st and 2nd generation infrared remote controlled engine immobiliser systems with rolling code (V1 and V2))
2958	General methods for coded KEY and infrared remote control engine immobiliser systems and relevant fault finding procedures
2965	Modification of multi-timer unit on the Clio II
2990	Removal of solenoid valves on Bosch and Lucas diesel injection pumps

SUMMARY OF TECHNICAL NOTES

Number	Content
3018	Engine immobiliser fault finding erratum note
3028	Special notes on the BII unit (Espace JE0)
3089	Radio frequency remote control for Méganes sold in Japan
3156	CODED KEY engine immobiliser: the security code no longer exists but has been replaced by a repair code allocated to the vehicle for life during manufacture
3228	Radio frequency remote control and automatic door locking on Méganes
3243	This note contains information on special notes on radio frequency remote control fitted on vehicles sold in Japan (Clio II)
3248	Radio frequency remote control on the Clio II
3315	New procedure for issuing engine immobiliser and radio codes
3355	2nd generation UCH and key head. The Mégane range is being fitted with new generation UCHs and key heads (internal development of the immobiliser function)
3361	Phase II Twingos will from now on be fitted with an electric central door locking when driving system and new dual-function key heads
3391	From now on, the Kangoo and Clio II will be fitted with a system for locking doors when driving. The engine immobiliser and radio frequency remote control functions stay the same
3429	Twingo radio frequency receiver integrated in the starter ring
3441	Special notes of the phase I' Espace (JE0X)
3464	Engine immobiliser integrated in UCH with CLIP fault finding tool (V14 update)
3474	Summary of engine immobiliser systems
3532	Fault finding of the multi-timer unit (Clio)
3546	Fault finding engine immobiliser (Twingo/Kangoo/Master/Mascott)
3560	Fault finding of the multi-timer unit (Clio) and decoder unit (Twingo/Kangoo/Master): programming procedures
3561	Run a fault finding test on the UCH (Clio)
3594	Run a fault finding test on the UCH (Twingo)
3623	Special notes on fault finding (Espace JE0)
3629	Special notes for multiplex vehicles (Kangoo)
3641	Fault finding on multiplex vehicles: engine immobiliser (Kangoo)
3643	Fault finding on multiplex vehicles: connection unit (Kangoo)
3668	Fault finding configurations and UCH programming (Megane)
3681	Special notes on Clio V6 phase II
3732	Electrical special notes on Kangoo phase II (provisional note)
3756	Master phase II Special Notes

Workshop Repair Manuals	Vehicle
291	Renault 21 discontinued
293	Renault 19 discontinued
307	Laguna
312	Mégane
315	Espace
323	Master
325	Kangoo
337	Clio II
339-341	Laguna II
342-344	Trafic II
345-347	Clio II phase II
348	Clio II fitted with L7X engine
350-352	Avantime
353-355	Vel Satis
356	Mascott
361-363	Espace IV
364-366	Mégane II
370-372	Scénic II

RENAULT

Technical Note6012A

TTY

Gearbox and final drive oils

All types

Sub-sections concerned: 04A - 21A - 21B - 23A - 26A

Oils used for lubricating gearboxes and final drives.

IMPORTANT: Gearboxes may be seriously damaged if the recommended oils are not used.

See the corresponding Technical Note for information on topping up the oil in PK and PF gearboxes.

Note: Follow the advice given in this Technical Note when storing gearbox oils.

Edition 8

77 11 329 822 **AUGUST 2004** **Edition Anglaise**

"The repair methods given by the manufacturer in this document are based on the technical specifications current when it was prepared.

The methods may be modified as a result of changes introduced by the manufacturer in the production of the various component units and accessories from which his vehicles are constructed."

All copyrights reserved by Renault.

The reproduction or translation in part of whole of the present document, as well as the use of the spare parts reference numbering system, are prohibited without the prior written consent of Renault.

© Renault s.a.s. 2006

Gearbox and final drive oils

Contents

Page

04A LUBRICANTS

Gearbox oil: Recommendations 04A-1

Manual gearbox oil: Specifications 04A-2

Automatic gearbox oil: Specifications 04A-5

Sequential gearbox oil: Specifications 04A-7

Rear axle oil: Specifications 04A-8

116205

RENAULT has chosen ELF

I - INTRODUCTION:

Gearbox oils are high technology products which require careful management to ensure that they do not come into contact with water which, even in very small quantities, may reduce the oil quality and cause damage to the gearbox or final drive.

II - STORAGE AND USE:

Once opened, any can of oil must be checked to ensure that it is sealed when closed, to prevent water or other substances from entering.

III - SPECIAL NOTES:

1 - Storing oil cans:

Cans must be stored:

- in an area sheltered from the weather (rain, snow, spray),
- in a dry place (avoid areas near washing stations),
- hermetically sealed.

2 - Storing components (gearbox or final drive):

When storing a gearbox or final drive which has not been drained, block off air inlets.

Store the component in a dry place.

3 - Use of oil:

Cans must be closed after use.

To prevent a large surface area of oil from coming into contact with ambient air, do not decant the oil into a larger container.

In any operation on the gearbox requiring its drainage, the oil must be replaced with new oil.

It is also recommended that you shake the containers before filling the gearbox, especially after a long period in storage.

4 - Pressure washing (of the vehicle or a component):

During pressure washing, plug the gearbox or final drive breather pipe to prevent water or other impurities from entering the gearbox or final drive.

If the gearbox or final drive is removed, plug all holes to prevent water or other impurities from entering the gearbox or final drive.

I - VEHICLE/GEARBOX TYPE/OIL TYPE CORRELATIONS:

VEHICLE	GEARBOX TYPE	TYPE OF GEAR-BOX OIL
SUPER 5	JBx	TRANSELF TRJ 75W80
EXPRESS	JBx	TRANSELF TRJ 75W80
KANGOO	JBx/JCx	TRANSELF TRJ 75W80
KANGOO Electrical	RWx	ELF RENAULTMATIC D3 SYN
TWINGO	JBx/JHx (1)	TRANSELF TRJ 75W80
CLIO	JBx/JCx	TRANSELF TRJ 75W80
CLIO II	JBx/JCx/JHx (1)	TRANSELF TRJ 75W80
CLIO II V6	PK6	TRANSELF TRZ 75W80
CLIO III	JHx	TRANSELF TRJ 75W80
	TL4	TRANSELF TRT 75W80
MODUS	JHx	TRANSELF TRJ 75W80
	TL4	TRANSELF TRT 75W80
RENAULT 19	JBx/JCx	TRANSELF TRJ 75W80
MEGANE/ SCENIC	JBx/JCx	TRANSELF TRJ 75W80
MEGANE II	JH3/JR5/ND0	TRANSELF TRJ 75W80
	PK4	TRANSELF TRP 75W80
	TL4	TRANSELF TRT 75W80
SCENIC II short	JH3/JR5/ND0	TRANSELF TRJ 75W80
	TL4	TRANSELF TRT 75W80
SCENIC II long	JH3/JR5	TRANSELF TRT 75W80
	ND0	TRANSELF TRT 75W80
LAGUNA	JR5/JC5	TRANSELF TRJ 75W80
	PK1 (suffix 015/017/030/ 032/037/038)	TRANSELF TRZ 75W80
	PK1 (suffix 046/047/048/ 049/051)	TRANSELF TRP 75W80
LAGUNA II	JH3/JR5	TRANSELF TRJ 75W80
	PK4	TRANSELF TRP 75W80
	PK6	TRANSELF TRP 75W80
VEL SATIS	PK4	TRANSELF TRP 75W80
	PK6	TRANSELF TRP 75W80

SAFRANE	VM1/PK1/ PK7/PK9	TRANSELF TRZ 75W80
	PK1 (suffix 043) (B54G)	TRANSELF TRP 75W80
ESPACE J11 - J63	NGx/UNx	TRANSELF TRX 75W80
ESPACE JE0X	JC5	TRANSELF TRJ 75W80
	PK1	TRANSELF TRP 75W80
ESPACE IV	PK4	TRANSELF TRP 75W80
	PK6	TRANSELF TRX 75W80
AVANTIME	PK6	TRANSELF TRP 75W80
ALPINE	UNx	TRANSELF TRX 75W80
SPIDER	JC5	TRANSELF TRJ 75W80
TRAFIC	NEx/N0x	TRANSELF TRX 75W80
TRAFIC II	PK5/PK6	TRANSELF TRX 75W80
MASTER	UNx	TRANSELF TRX 75W80
MASTER II	PF1/PKx	TRANSELF TRX 75W80
MASTER RWD	ZFx	TRANSELF LD 75W80
LOGAN	JHx/JR5	TRANSELF TRJ 75W80

(1) Hydraulic control of JH sequential gearbox: use ELF RENAULTMATIC D3 SYN oil.

Note:

For Laguna vehicles with a PK1 gearbox which has a suffix that does not appear in this table use TRANSELF TRP 75W80.

II - STANDARDS AND PART NUMBERS OF THE VARIOUS RECOMMENDED OILS:

NAME	STANDARD	PART NO.
TRANSELF TRZ 75W80	APIGL4, MIL-L-2105	77 01 419 289 (1 litre)
TRANSELF TRX 80W140	APIGL5, MIL-L-2105 C or D	77 01 422 230 (0.5 litre)
TRANSELF TRX 75W80	APIGL5, MIL-L-2105 C or D	77 11 143 534 (5 litres)
ELF RENAULTMATIC D3 SYN	DEXRON III	May be ordered from ELF (1)
TRANSELF TRJ 75W80	APIGL5, MIL-L-2105 C or D	May be ordered from ELF (1)
TRANSELF LD 75W80	APIGL4, MIL-L-2105	May be ordered from ELF (1)
TRANSELF TRT 75W80	APIGL5, MIL-L-2105 C or D	77 11 226 421 (1 litre)
TRANSELF TRP 75W80	APIGL5, MIL-L-2105 C or D	77 11 219 747 (1 litre)

(1)Visit the ELF website.

III - IDENTIFICATION OF OIL FOR STANDARD EXCHANGE PK1 GEARBOXES:

The PK standard exchange gearbox type is indicated by:

- a label (A) with a fluorescent yellow background,

- a letter (M or T) stamped under the label:
  - M: gearbox with SINGLE-CONE synchroniser,
  - T: gearbox with MULTI-CONE synchroniser.

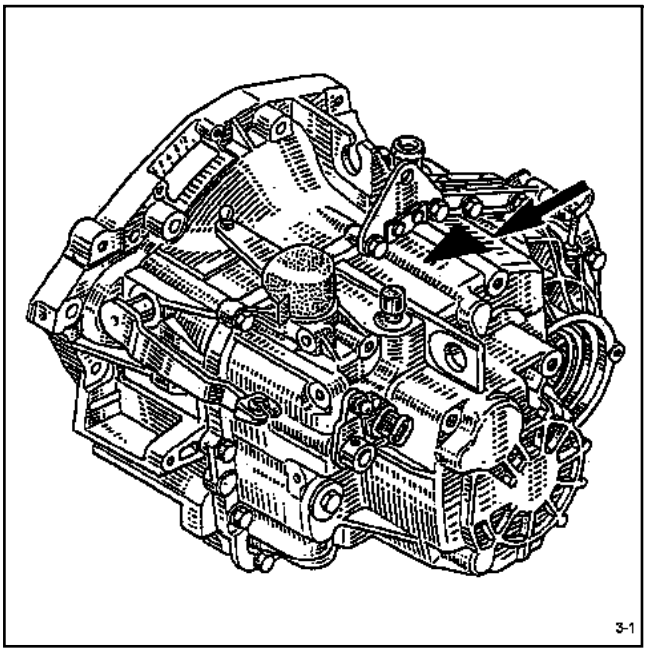

3-1

Label for gearboxes with SINGLE-CONE synchroniser:

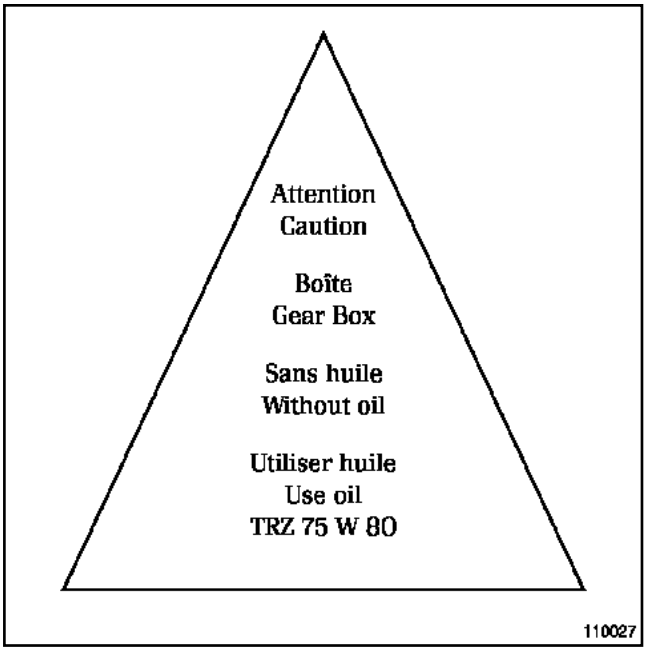

110027

Label for gearboxes with MULTI-CONE synchroniser:

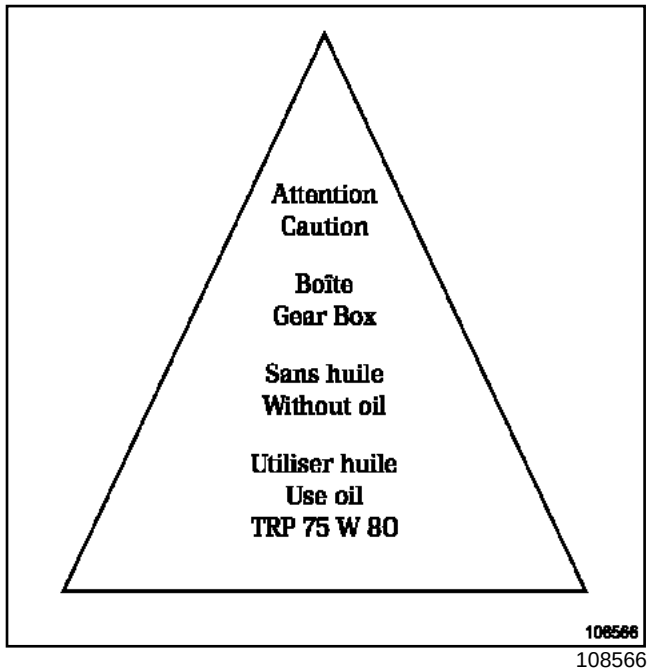

108566

I - VEHICLE/GEARBOX TYPE/OIL TYPE CORRELATIONS:

VEHICLE	GEARBOX TYPE	TYPE OF GEARBOX OIL
SUPER 5	MBx	ELF RENAULTMATIC D2
EXPRESS	MBx	ELF RENAULTMATIC D2
KANGOO	DP0	ELF RENAULTMATIC D3 SYN
TWINGO	MBx	ELF RENAULTMATIC D2
CLIO II	DP0	ELF RENAULTMATIC D3 SYN
CLIO III	DP0	ELF RENAULTMATIC D3 SYN
MODUS	DP0	ELF RENAULTMATIC D3 SYN
RENAULT 19	MBx/AD4	ELF RENAULTMATIC D2
MEGANE/ SCENIC	MBx/AD4	ELF RENAULTMATIC D2
	DP0	ELF RENAULTMATIC D3 SYN
MEGANE II/ SCENIC II	DP0	ELF RENAULTMATIC D3 SYN
LAGUNA	AD4/AD8	ELF RENAULTMATIC D2
	LM0	ESSO ATF LT 71141
	DP0	ELF RENAULTMATIC D3 SYN
LAGUNA II	DP0	ELF RENAULTMATIC D3 SYN
	SU1	CLIP oil
VEL SATIS	SU1	CLIP oil
SAFRANE	AD8	ELF RENAULTMATIC D2
	SU0	KUWAIT PETROLEUM ATF 97337
	LM0	ESSO ATF LT 71141
ESPACE J11 - J63	AR4	ELF RENAULTMATIC D2

ESPACE JE0X	AD8	ELF RENAULTMATIC D2
	LM0	ESSO ATF LT 71141
	DP0	ELF RENAULTMATIC D3 SYN
ESPACE IV	SU1	CLIP oil
AVANTIME	SU1	CLIP oil

Note:

ELF RENAULTMATIC D3 SYN oil is not a replacement for RENAULTMATIC D2 oil.

II - STANDARDS AND PART NUMBERS OF THE VARIOUS RECOMMENDED OILS:

NAME	STANDARD	PART NO.
ELF RENAULTMATIC D2	DEXRON II D	77 01 402 037 (2 litres)
ESSO ATF LT 71141	-	77 11 172 226 (2 litres)
KUWAIT PETROLEUM ATF 97337	-	77 11 172 225 (1 litre)
ELF RENAULTMATIC D3 SYN	DEXRON III	May be ordered from ELF (1)
CLIP oil	-	77 11 218 368 (2 litres)

(1) Visit the ELF website.

I - VEHICLE/GEARBOX TYPE/OIL TYPE CORRELATIONS:

Vehicle	Gearbox type	Type of oil for gearbox	Type of oil for sequential unit	Type of oil for hydraulic clutch control
TWINGO	JH1	TRANSELF TRJ 75W80	ELF RENAULTMATIC D3 SYN	-
CLIO II	JH1	TRANSELF TRJ 75W80	ELF RENAULTMATIC D3 SYN	-
CLIO III	JA3/JA5	TRANSELF TRJ 75W80	ELF SPEEDMATIC	-
MODUS	JA3/JA5	TRANSELF TRJ 75W80	ELF SPEEDMATIC	-
TRAFIC II	PA6	TRANSELF TRX 75W80	ELF SPEEDMATIC	DOT4
MASTER	PA6	TRANSELF TRX 75W80	ELF SPEEDMATIC	DOT4

II - STANDARDS AND PART NUMBERS OF THE VARIOUS RECOMMENDED OILS:

Description	Standard	Part no.
TRANSELF TRX 75W80	APIGL5 MIL-L-2105 C or D	77 11 143 534 (5 litres)
TRANSELF TRJ 75W80	APIGL5 MIL-L-2105 C or D	May be ordered from ELF (1)
ELF RENAULTMATIC D3 SYN	DEXRON III	May be ordered from ELF (1)
ELF SPEEDMATIC	APIGL5 MIL-L-2105 C or D	77 11 228 107 (1 litre)

(1) Visit the ELF website

I - VEHICLE/GEARBOX TYPE/OIL TYPE CORRELATIONS:

VEHICLE	TYPE OF FINAL DRIVE	TYPE OF FINAL DRIVE OIL
KANGOO	OH1 rear final drive	TRANSELF UNIVERSAL FE 80W90
CLIO	AD4	TRANSELF TRX 75W80
RENAULT 19	AD4	TRANSELF TRX 75W80
MEGANE/ SCENIC	SD1 rear final drive	TRANSELF UNIVERSAL FE 80W90
	AD4	TRANSELF TRX 75W80
LAGUNA	AD4/AD8	TRANSELF TRX 75W80
SAFRANE	AD8/OT2	TRANSELF TRX 75W80
ESPACE J11 - J63	AR4/OT2	TRANSELF TRX 75W80
ESPACE JE0X	AD8	TRANSELF TRX 75W80
TRAFIC	OT1	TRANSELF SYNTHESE FE 75W140
MASTER RWD	ZFx	TRANSELF UNIVERSAL FE 80W90

II - STANDARDS AND PART NUMBERS OF THE VARIOUS RECOMMENDED OILS:

NAME	STANDARD	PART NO.
TRANSELF TRX 75W80	APIGL5, MIL-L-2105 C or D	77 11 143 534 (5 litres)
TRANSELF SYNTHESE FE 75W140	APIGL5, MIL-L-2105 C or D	May be ordered from ELF (1)
TRANSELF UNIVERSAL FE 80W90	APIGL5, MIL-L-2105 C or D	May be ordered from ELF (1)

(1) Visit the ELF website.

RENAULT

Technical Note6013A

TTY

Engine oils

Basic manual: All MRs

Sub-sections concerned: 04A - 05A - 10A

Edition 8

77 11 329 842 **JULY 2004** **Edition Anglaise**

"The repair methods given by the manufacturer in this document are based on the technical specifications current when it was prepared.

The methods may be modified as a result of changes introduced by the manufacturer in the production of the various component units and accessories from which his vehicles are constructed."

All copyrights reserved by Renault.

The reproduction or translation in part of whole of the present document, as well as the use of the spare parts reference numbering system, are prohibited without the prior written consent of Renault.

© Renault s.a.s. 2006

The following tables show the viscosity levels and grades to be used according to the ambient temperatures during vehicle use.

Maintenance must be carried out in accordance with the maintenance contract for the vehicle.

The service interval (engine oil changes) requires that careful attention be paid to the oil level and grades indicated in the attached tables.

WARNING

Engines may be seriously damaged if the recommended oils are not used.

"The repair methods given by the manufacturer in this document are based on the technical specifications current when it was prepared.

The methods may be modified as a result of changes introduced by the manufacturer in the production of the various component units and accessories from which his vehicles are constructed."

All copyrights reserved by Renault.

The reproduction or translation in part of whole of the present document, as well as the use of the spare parts reference numbering system, are prohibited without the prior written consent of Renault.

© Renault s.a.s. 2006

Engine oils

Contents

Page

04A LUBRICANTS

Engine oil: Specifications 04A-1

116205

RENAULT has chosen ELF

I - OIL GRADE FOR VEHICLES WITH A FABRICATION DATE AFTER 01/01/2001:

1 - For EUROPE:

Notes:

- If the grades are listed in the table below, use only one of these grades depending on the average external temperature of the country (see graph below the table).
- When the grade is not listed in the table, please refer to the graph below the table:

RENAULT recommends, for both filling and changing the oil, that **ACEA standard** engine oil is used, in accordance with the table below:

Vehicle	Engine	ACEA standard				
		A3	A5*	B3	B4	C3
TWINGO	C3G	X	X			
	D4D	X	X			
	D4F	X	X			
	D7D	X	X			
	D7F	X	X			
CLIO II	D4D	X	X			
	D4F	X	X			
	D7D	X	X			
	D7F	X	X			
	E7J	X	X			
	RENAULT SPORT F4R	Only 5W40 or 0W40				
	F8Q			X	X	
	F9Q				X	
	K4J	X	X			
	K4M	X	X			
	K7J	X	X			
	K7M	X	X			
	K9K				X	

Vehicle	Engine	ACEA standard				
		A3	A5*	B3	B4	C3
CLIO III	D4F	X	X			
	K4J	X	X			
	K4M	X	X			
	M4R	X	X			
	K9K				X	
	K9K with particle filter					Only 5W30 or 0W30
CLIO V6	L7X	Only 5W40 or 0W40				
MODUS	D4F	X	X			
	K4J	X	X			
	K4M	X	X			
	K9K				X	
	K9K with particle filter					Only 5W30 or 0W30
MEGANE/ SCENIC	E7F	X	X			
	F3R	X	X			
	F4P	X	X			
	F4R	X	X			
	F5R	X	X			
	F7R	X				
	F8Q			X	X	
	F9Q				X	
	K4J	X	X			
	K4M	X	X			
	K7M	X	X			

Vehicle	Engine	ACEA standard				
		A3	A5*	B3	B4	C3
MEGANE II/ SCENIC II	F4R	X				
	Turbocharged F4R	X				
	RENAULT SPORT turbocharged F4R	Only 5W40 or 0W40				
	F9Q				X	
	F9Q with particle filter					Only 5W30 or 0W30
	K4J	X	X			
	K4M	X	X			
	K9K				X	
	M9R				X	
	M9R with particle filter					Only 5W30 or 0W30

Vehicle	Engine	ACEA standard				
		A3	A5*	B3	B4	C3
LAGUNA II	F4P	X	X			
	F4R	X	X			
	Turbocharged F4R	X				
	GT/CELSIUM turbocharged F4R	Only 5W40 or 0W40				
	F5R	X	X			
	F9Q				Only 5W40 or 0W40 or 0W30	
	F9Q with particle filter					Only 5W30 or 0W30
	G9T				X	
	G9T with particle filter				Only 5W40 or 0W40 or 0W30	
	K4M	X	X			
	L7X	X	X			
	M9R				X	
	M9R with particle filter					Only 5W30 or 0W30

Vehicle	Engine	ACEA standard				
		A3	A5*	B3	B4	C3
SAFRANE	G8T			X	X	
	J7R	X	X			
	J7T	X	X			
	J8S			X	X	
	L7X	X	X			
	N7Q	X	X			
	N7U	X	X			
	S8U			X	X	
	Z7X	X	X			
VELSATIS	Turbocharged F4R	X				
	G9T				X	
	G9T with particle filter				Only 5W40 or 0W40 or 0W30	
	P9X				Only 5W40 or 0W40 or 0W30	
	V4Y	X	X			
	M9R with particle filter					Only 5W30 or 0W30

Vehicle	Engine	ACEA standard				
		A3	A5*	B3	B4	C3
ESPACE (I-III)	F3R	X	X			
	F4R	X	X			
	F9Q				X	
	G8T			X	X	
	G9T				X	
	J6R	X	X			
	J7R	X	X			
	J7T	X	X			
	J8S			X	X	
	L7X	X	X			
	Z7W	X	X			
	Z7X	X	X			
ESPACE IV	F4R	X	X			
	Turbocharged F4R	X				
	F9Q				Only 5W40 or 0W40 or 0W30	
	G9T				Only 5W40 or 0W40 or 0W30	
	M9R with particle filter					Only 5W30 or 0W30
	P9X				Only 5W40 or 0W40 or 0W30	
	V4Y	X	X			

Vehicle	Engine	ACEA standard				
		A3	A5*	B3	B4	C3
AVANTIME	F3R	X	X			
	F4R	X	X			
	Turbocharged F4R	X				
	F9Q				X	
	G8T			X	X	
	G9T				X	
	L7X	X	X			
	Z7X	X	X			
KANGOO	D4D	X	X			
	D4F	X	X			
	D7D	X	X			
	D7F	X	X			
	E7J	X	X			
	F8Q			X	X	
	F9Q				X	
	K4M	X	X			
	K7J	X	X			
	K7M	X	X			
	K9K				X	
	Electric	Only 5W40 or 0W40				
TRAFIC II	F4R	X	X			
	F9Q				X	
	G9U				X	

Vehicle	Engine	ACEA standard				
		A3	A5*	B3	B4	C3
MASTER	F4R	X	X			
	F9Q				X	
	G9T				X	
	G9U				X	
	J5R	X	X			
	J7T	X	X			
	J8S			X	X	
	S8U			X	X	
	S9U				X	
	S9W				X	
	ZD3				X	
LOGAN	D4D	X	X			
	K4M	X	X			
	K7J	X	X			
	K7M	X	X			
	K9K				X	

* Oil enabling a reduction in fuel consumption.

a - Petrol engine:

To find out which oil grade to choose, please refer to the graph below:

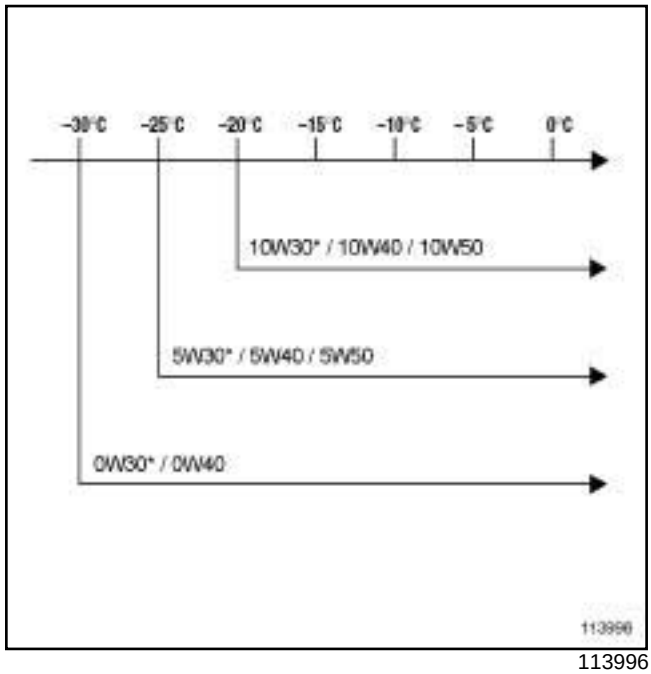

113996

* Except for turbocharged engines, F7P, F7R, RENAULT SPORT F4R, RENAULT SPORT turbocharged F4R and RENAULT SPORT L7X.

b - DIESEL engine:

To find out which oil grade to choose, please refer to the graph below:

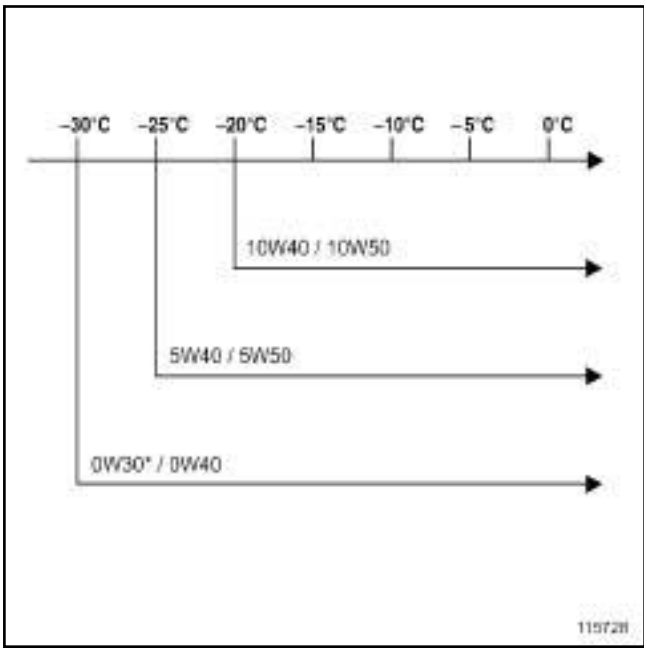

115728

* Only with **ACEA B4** or **ACEA C3** standard.

Note:

If an engine oil grade is not available or has been discontinued, please refer to the Table of oil interchangeability section.

Note:

ACEA B1 standard oils should not be used for DIESEL engines under any circumstances.

2 - For other countries:

a - Petrol engine:

RENAULT recommends, for both filling and changing the oil, that **ACEA A1*, ACEA A3 or ACEA A5* standard** engine oil is used, or if this is not available **ACEA A2, API SJ, API SL** or **API SM standard** .

To find out which oil grade to choose, please refer to the following graph:

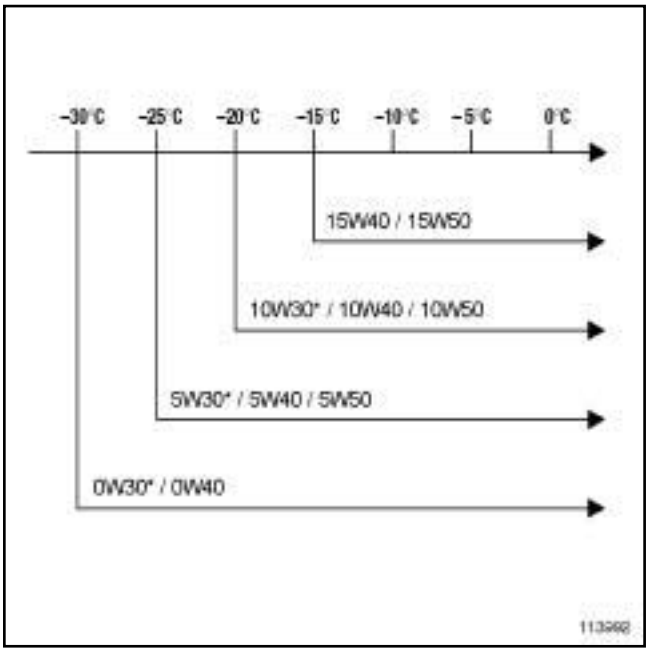

113992

* Except for turbocharged engines, F7P, F7R, RENAULT SPORT F4R, RENAULT SPORT turbocharged F4R and RENAULT SPORT L7X.

- Special cases:

- For CLIO RENAULT SPORT F4R, CLIO RENAULT SPORT L7X, MEGANE RENAULT II SPORT turbocharged F4R, LAGUNA GT/CELSIUM turbocharged F4R, and Electric KANGOO, only use oil which is **ACEA A3 standard** and **5W40 grade** (or **0W40 grade** , depending on the external temperature).

b - DIESEL engine:

RENAULT recommends, for both filling and changing the oil, that **ACEA B3, ACEA B4, ACEA C3* standard** engine oil is used, or if this is not available **ACEA B2** or **API CF standard** .

* **ACEA C3 standard** engine oils can only be used in the following special cases.

To find out which oil grade to choose, please refer to the following graph:

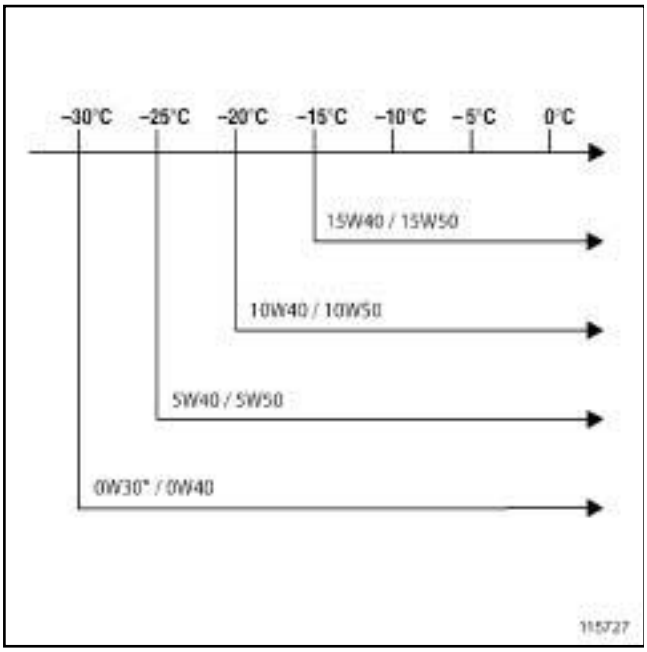

115727

* Only with **ACEA** standard.

- Special cases:

- For the LAGUNA II F9Q without particle filter and the G9T with particle filter, ESPACE IV, VELSATIS P9X and G9T with particle filter, only use oil which is **B4 standard** and **5W40 grade** (or **0W30 grade** or **0W40 grade** depending on the external temperature).
- For the MEGANE II F9Q fitted with particle filter, SCENIC II F9Q fitted with particle filter, LAGUNA II F9Q fitted with particle filter, M9R engines fitted with particle filters and K9K engines fitted with particle filters, only use oil which is **ACEA C3 standard** and **5W30 grade** (or **0W30 grade** depending on the external temperature).

II - TABLE OF OIL INTERCHANGEABILITY:

1 - ACEA standard:

	Standard	Minimum standard with which it can be replaced
Petrol	ACEA A1*	ACEA A3 or ACEA A5*
	ACEA A2	ACEA A3
	ACEA A3	-
	ACEA A5*	ACEA A3
DIESEL	ACEA B1*	ACEA B3 or ACEA B5*
	ACEA B2	ACEA B3
	ACEA B3	ACEA B4
	ACEA B4	-
	ACEA B5*	ACEA B4
	ACEA C3	-

* engine oil enabling a reduction in fuel consumption.

2 - API standard:

	Standard	Minimum standard with which it can be replaced
Petrol	API SH	API SJ
	API SJ	API SL
	API SL	API SM
	API SM	-
DIESEL	API CF	-

I - OIL GRADE FOR VEHICLES WITH A FABRICATION DATE BEFORE 01/01/2001:

Note:

If an engine oil grade is not available or has been discontinued, please refer to the Table of oil interchangeability section.

Note:

ACEA B1 standard oils should not be used for DIESEL engines under any circumstances.

1 - For EUROPE:

a - Petrol engine:

RENAULT recommends that for both filling and changing the oil **ACEA A2** or **ACEA A1* standard** oil is used (oil enabling a reduction in fuel consumption).

Oil grade to choose depending on average external temperature:

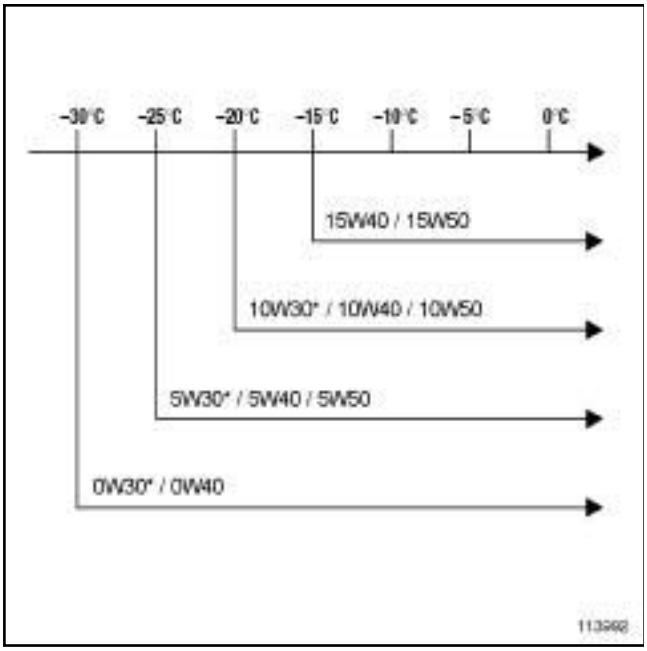

113992

* Except F7P and F7R turbocharged engines.

b - DIESEL engine:

RENAULT recommends that for both filling and changing the oil **ACEA B2 standard** oil is used.

Oil grade to choose depending on average external temperature:

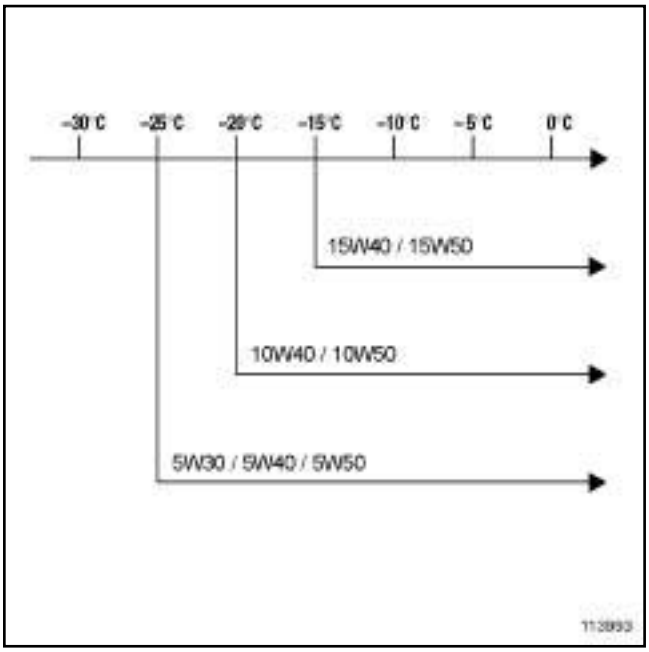

113993

Note:

If an engine oil grade is not available or has been discontinued, please refer to the Table of oil interchangeability section.

Note:

ACEA B1 standard oils should not be used for DIESEL engines under any circumstances.

2 - For other countries:

a - Petrol engine:

RENAULT recommends that for both filling and changing the oil **API SH** or **API SJ standard** oil is used.

Oil grade to choose depending on average external temperature:

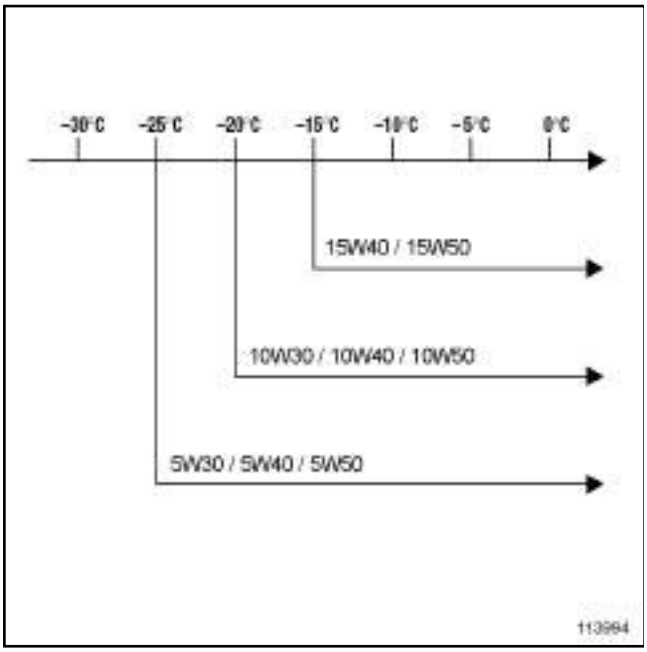

113994

b - DIESEL engine:

RENAULT recommends that for both filling and changing the oil **API CF standard** oil is used.

Oil grade to choose depending on average external temperature:

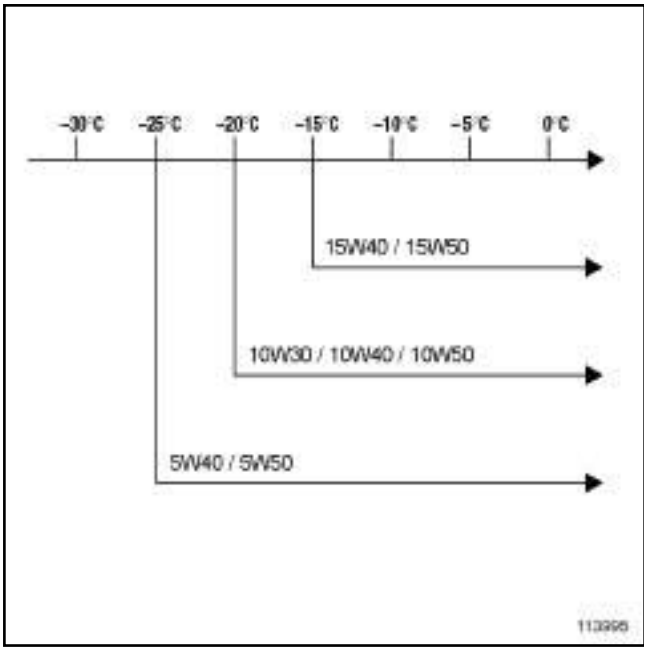

113995

II - TABLE OF OIL INTERCHANGEABILITY:

1 - CCMC standard:

	Standard	**Minimum standard with which it can be replaced**
Petrol	CCMC G4	ACEA A2
	CCMC G5	ACEA A2
DIESEL	CCMC PD2	ACEA A2

2 - ACEA standard:

	Standard	**Minimum standard with which it can be replaced**
Petrol	ACEA A1*	ACEA A3 or ACEA A5*
	ACEA A2	ACEA A3
	ACEA A3	-
	ACEA A5*	ACEA A3
DIESEL	ACEA B1*	ACEA B3 or ACEA B5*
	ACEA B2	ACEA B3
	ACEA B3	ACEA B4
	ACEA B4	-
	ACEA B5*	ACEA B4
	ACEA C3	-

* oil enabling a reduction in fuel consumption.

3 - API standard:

	Standard	Minimum standard with which it can be replaced
Petrol	API SH	API SJ
	API SJ	API SL
	API SL	API SM
	API SM	-
DIESEL	API CF	-

RENAULT

Technical Note6013A

TTY

Engine oils

Basic manual: All MRs

Sub-sections concerned: 04A - 05A - 10A

Edition 8

77 11 329 842 **JULY 2004** **Edition Anglaise**

"The repair methods given by the manufacturer in this document are based on the technical specifications current when it was prepared.

The methods may be modified as a result of changes introduced by the manufacturer in the production of the various component units and accessories from which his vehicles are constructed."

All copyrights reserved by Renault.

The reproduction or translation in part of whole of the present document, as well as the use of the spare parts reference numbering system, are prohibited without the prior written consent of Renault.

© Renault s.a.s. 2006

The following tables show the viscosity levels and grades to be used according to the ambient temperatures during vehicle use.

Maintenance must be carried out in accordance with the maintenance contract for the vehicle.

The service interval (engine oil changes) requires that careful attention be paid to the oil level and grades indicated in the attached tables.

WARNING

Engines may be seriously damaged if the recommended oils are not used.

"The repair methods given by the manufacturer in this document are based on the technical specifications current when it was prepared.

The methods may be modified as a result of changes introduced by the manufacturer in the production of the various component units and accessories from which his vehicles are constructed."

All copyrights reserved by Renault.

The reproduction or translation in part of whole of the present document, as well as the use of the spare parts reference numbering system, are prohibited without the prior written consent of Renault.

© Renault s.a.s. 2006

Engine oils

Contents

Page

04A LUBRICANTS

Engine oil: Specifications 04A-1

116205

RENAULT has chosen ELF

I - OIL GRADE FOR VEHICLES WITH A FABRICATION DATE AFTER 01/01/2001:

1 - For EUROPE:

Notes:

- If the grades are listed in the table below, use only one of these grades depending on the average external temperature of the country (see graph below the table).
- When the grade is not listed in the table, please refer to the graph below the table:

RENAULT recommends, for both filling and changing the oil, that **ACEA standard** engine oil is used, in accordance with the table below:

Vehicle	Engine	ACEA standard				
		A3	A5*	B3	B4	C3
TWINGO	C3G	X	X			
	D4D	X	X			
	D4F	X	X			
	D7D	X	X			
	D7F	X	X			
CLIO II	D4D	X	X			
	D4F	X	X			
	D7D	X	X			
	D7F	X	X			
	E7J	X	X			
	RENAULT SPORT F4R	Only 5W40 or 0W40				
	F8Q			X	X	
	F9Q				X	
	K4J	X	X			
	K4M	X	X			
	K7J	X	X			
	K7M	X	X			
	K9K				X	

Vehicle	Engine	ACEA standard				
		A3	A5*	B3	B4	C3
CLIO III	D4F	X	X			
	K4J	X	X			
	K4M	X	X			
	M4R	X	X			
	K9K				X	
	K9K with particle filter					Only 5W30 or 0W30
CLIO V6	L7X	Only 5W40 or 0W40				
MODUS	D4F	X	X			
	K4J	X	X			
	K4M	X	X			
	K9K				X	
	K9K with particle filter					Only 5W30 or 0W30
MEGANE/ SCENIC	E7F	X	X			
	F3R	X	X			
	F4P	X	X			
	F4R	X	X			
	F5R	X	X			
	F7R	X				
	F8Q			X	X	
	F9Q				X	
	K4J	X	X			
	K4M	X	X			
	K7M	X	X			

Vehicle	Engine	ACEA standard				
		A3	A5*	B3	B4	C3
MEGANE II/ SCENIC II	F4R	X				
	Turbocharged F4R	X				
	RENAULT SPORT turbocharged F4R	Only 5W40 or 0W40				
	F9Q				X	
	F9Q with particle filter					Only 5W30 or 0W30
	K4J	X	X			
	K4M	X	X			
	K9K				X	
	M9R				X	
	M9R with particle filter					Only 5W30 or 0W30

Vehicle	Engine	ACEA standard				
		A3	A5*	B3	B4	C3
LAGUNA II	F4P	X	X			
	F4R	X	X			
	Turbocharged F4R	X				
	GT/CELSIUM turbocharged F4R	Only 5W40 or 0W40				
	F5R	X	X			
	F9Q				Only 5W40 or 0W40 or 0W30	
	F9Q with particle filter					Only 5W30 or 0W30
	G9T				X	
	G9T with particle filter				Only 5W40 or 0W40 or 0W30	
	K4M	X	X			
	L7X	X	X			
	M9R				X	
	M9R with particle filter					Only 5W30 or 0W30

Vehicle	Engine	ACEA standard				
		A3	A5*	B3	B4	C3
SAFRANE	G8T			X	X	
	J7R	X	X			
	J7T	X	X			
	J8S			X	X	
	L7X	X	X			
	N7Q	X	X			
	N7U	X	X			
	S8U			X	X	
	Z7X	X	X			
VELSATIS	Turbocharged F4R	X				
	G9T				X	
	G9T with particle filter				Only 5W40 or 0W40 or 0W30	
	P9X				Only 5W40 or 0W40 or 0W30	
	V4Y	X	X			
	M9R with particle filter					Only 5W30 or 0W30

Vehicle	Engine	ACEA standard				
		A3	A5*	B3	B4	C3
ESPACE (I-III)	F3R	X	X			
	F4R	X	X			
	F9Q				X	
	G8T			X	X	
	G9T				X	
	J6R	X	X			
	J7R	X	X			
	J7T	X	X			
	J8S			X	X	
	L7X	X	X			
	Z7W	X	X			
	Z7X	X	X			
ESPACE IV	F4R	X	X			
	Turbocharged F4R	X				
	F9Q				Only 5W40 or 0W40 or 0W30	
	G9T				Only 5W40 or 0W40 or 0W30	
	M9R with particle filter					Only 5W30 or 0W30
	P9X				Only 5W40 or 0W40 or 0W30	
	V4Y	X	X			

Vehicle	Engine	ACEA standard				
		A3	A5*	B3	B4	C3
AVANTIME	F3R	X	X			
	F4R	X	X			
	Turbocharged F4R	X				
	F9Q				X	
	G8T			X	X	
	G9T				X	
	L7X	X	X			
	Z7X	X	X			
KANGOO	D4D	X	X			
	D4F	X	X			
	D7D	X	X			
	D7F	X	X			
	E7J	X	X			
	F8Q			X	X	
	F9Q				X	
	K4M	X	X			
	K7J	X	X			
	K7M	X	X			
	K9K				X	
	Electric	Only 5W40 or 0W40				
TRAFIC II	F4R	X	X			
	F9Q				X	
	G9U				X	

Vehicle	Engine	ACEA standard				
		A3	A5*	B3	B4	C3
MASTER	F4R	X	X			
	F9Q				X	
	G9T				X	
	G9U				X	
	J5R	X	X			
	J7T	X	X			
	J8S			X	X	
	S8U			X	X	
	S9U				X	
	S9W				X	
	ZD3				X	
LOGAN	D4D	X	X			
	K4M	X	X			
	K7J	X	X			
	K7M	X	X			
	K9K				X	

* Oil enabling a reduction in fuel consumption.

a - Petrol engine:

To find out which oil grade to choose, please refer to the graph below:

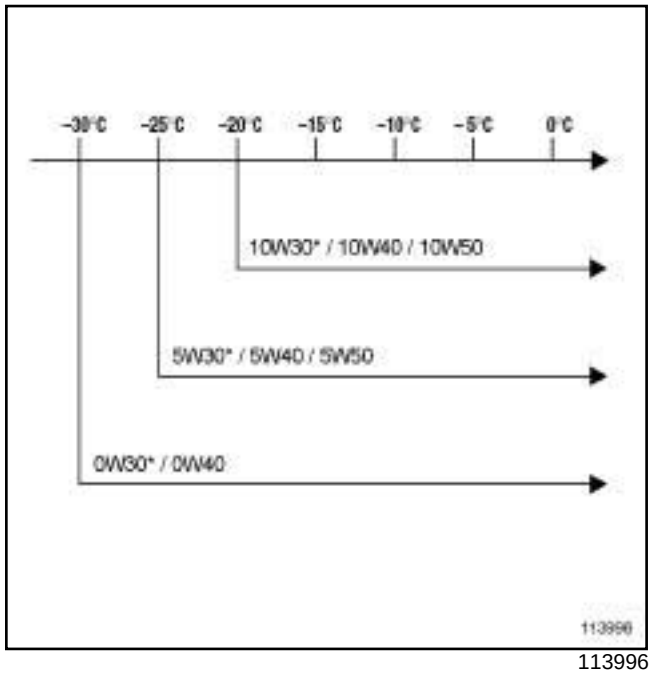

113996

* Except for turbocharged engines, F7P, F7R, RENAULT SPORT F4R, RENAULT SPORT turbocharged F4R and RENAULT SPORT L7X.

b - DIESEL engine:

To find out which oil grade to choose, please refer to the graph below:

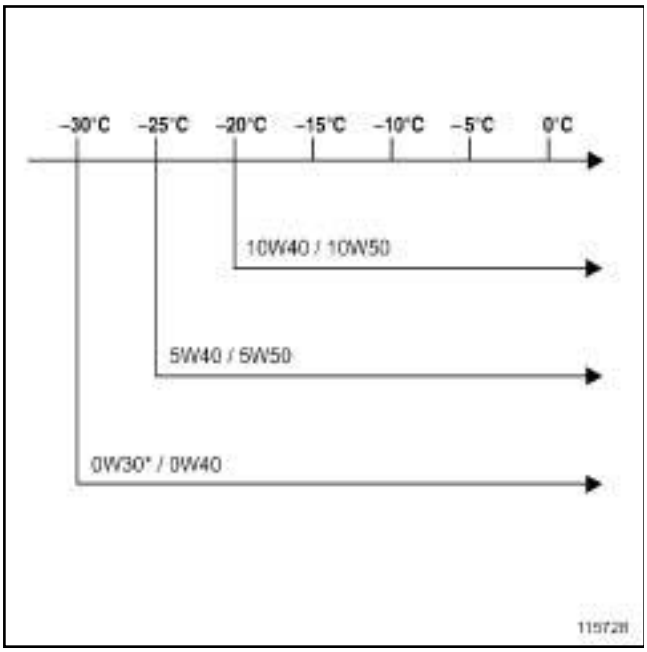

115728

* Only with **ACEA B4** or **ACEA C3** standard.

Note:

If an engine oil grade is not available or has been discontinued, please refer to the Table of oil interchangeability section.

Note:

ACEA B1 standard oils should not be used for DIESEL engines under any circumstances.

2 - For other countries:

a - Petrol engine:

RENAULT recommends, for both filling and changing the oil, that **ACEA A1*, ACEA A3 or ACEA A5* standard** engine oil is used, or if this is not available **ACEA A2, API SJ, API SL** or **API SM standard** .

To find out which oil grade to choose, please refer to the following graph:

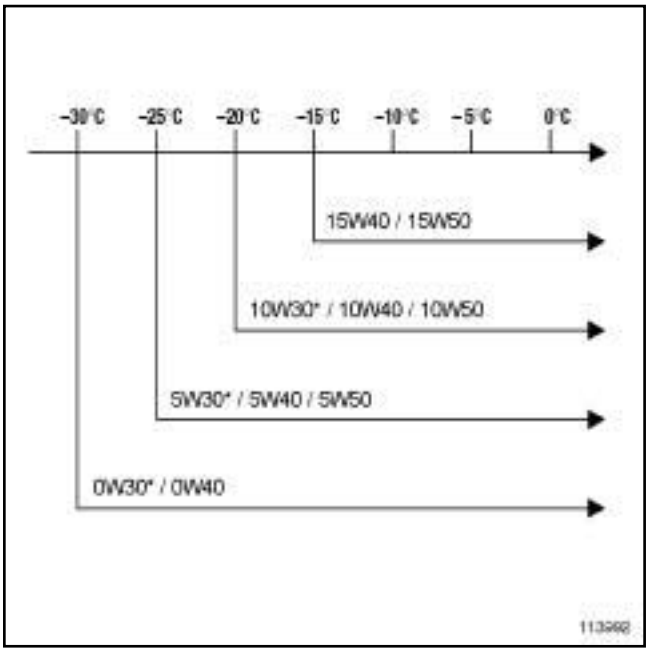

113992

* Except for turbocharged engines, F7P, F7R, RENAULT SPORT F4R, RENAULT SPORT turbocharged F4R and RENAULT SPORT L7X.

- Special cases:

- For CLIO RENAULT SPORT F4R, CLIO RENAULT SPORT L7X, MEGANE RENAULT II SPORT turbocharged F4R, LAGUNA GT/CELSIUM turbocharged F4R, and Electric KANGOO, only use oil which is **ACEA A3 standard** and **5W40 grade** (or **0W40 grade** , depending on the external temperature).

b - DIESEL engine:

RENAULT recommends, for both filling and changing the oil, that **ACEA B3, ACEA B4, ACEA C3* standard** engine oil is used, or if this is not available **ACEA B2** or **API CF standard** .

* **ACEA C3 standard** engine oils can only be used in the following special cases.

To find out which oil grade to choose, please refer to the following graph:

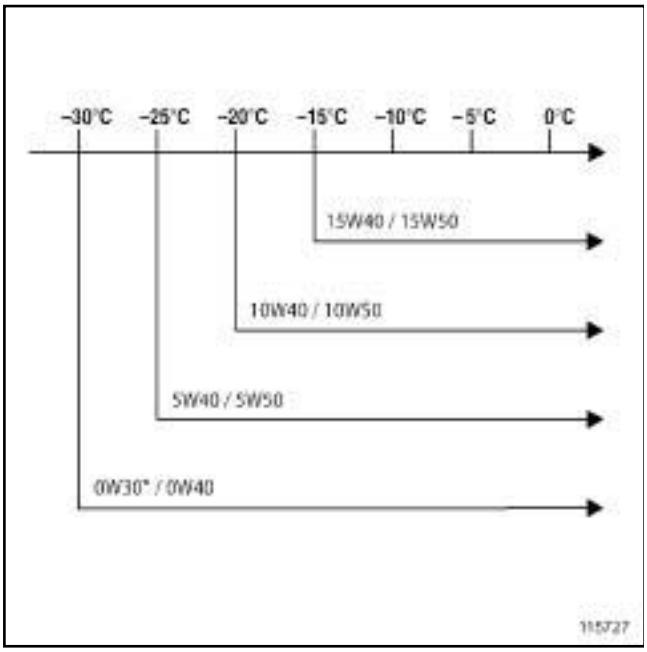

115727

* Only with **ACEA** standard.

- Special cases:

- For the LAGUNA II F9Q without particle filter and the G9T with particle filter, ESPACE IV, VELSATIS P9X and G9T with particle filter, only use oil which is **B4 standard** and **5W40 grade** (or **0W30 grade** or **0W40 grade** depending on the external temperature).
- For the MEGANE II F9Q fitted with particle filter, SCENIC II F9Q fitted with particle filter, LAGUNA II F9Q fitted with particle filter, M9R engines fitted with particle filters and K9K engines fitted with particle filters, only use oil which is **ACEA C3 standard** and **5W30 grade** (or **0W30 grade** depending on the external temperature).

II - TABLE OF OIL INTERCHANGEABILITY:

1 - ACEA standard:

	Standard	Minimum standard with which it can be replaced
Petrol	ACEA A1*	ACEA A3 or ACEA A5*
	ACEA A2	ACEA A3
	ACEA A3	-
	ACEA A5*	ACEA A3
DIESEL	ACEA B1*	ACEA B3 or ACEA B5*
	ACEA B2	ACEA B3
	ACEA B3	ACEA B4
	ACEA B4	-
	ACEA B5*	ACEA B4
	ACEA C3	-

* engine oil enabling a reduction in fuel consumption.

2 - API standard:

	Standard	Minimum standard with which it can be replaced
Petrol	API SH	API SJ
	API SJ	API SL
	API SL	API SM
	API SM	-
DIESEL	API CF	-

I - OIL GRADE FOR VEHICLES WITH A FABRICATION DATE BEFORE 01/01/2001:

Note:

If an engine oil grade is not available or has been discontinued, please refer to the Table of oil interchangeability section.

Note:

ACEA B1 standard oils should not be used for DIESEL engines under any circumstances.

1 - For EUROPE:

a - Petrol engine:

RENAULT recommends that for both filling and changing the oil **ACEA A2** or **ACEA A1* standard** oil is used (oil enabling a reduction in fuel consumption).

Oil grade to choose depending on average external temperature:

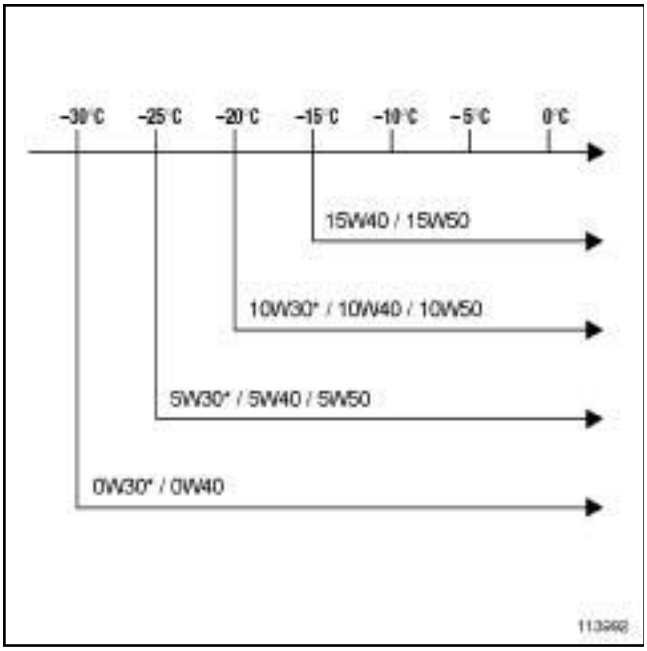

113992

* Except F7P and F7R turbocharged engines.

b - DIESEL engine:

RENAULT recommends that for both filling and changing the oil **ACEA B2 standard** oil is used.

Oil grade to choose depending on average external temperature:

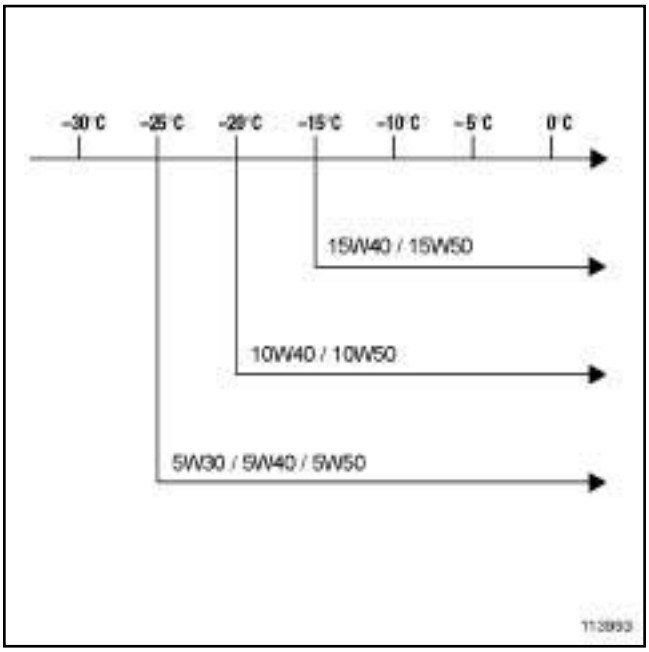

113993

Note:

If an engine oil grade is not available or has been discontinued, please refer to the Table of oil interchangeability section.

Note:

ACEA B1 standard oils should not be used for DIESEL engines under any circumstances.

2 - For other countries:

a - Petrol engine:

RENAULT recommends that for both filling and changing the oil **API SH** or **API SJ standard** oil is used.

Oil grade to choose depending on average external temperature:

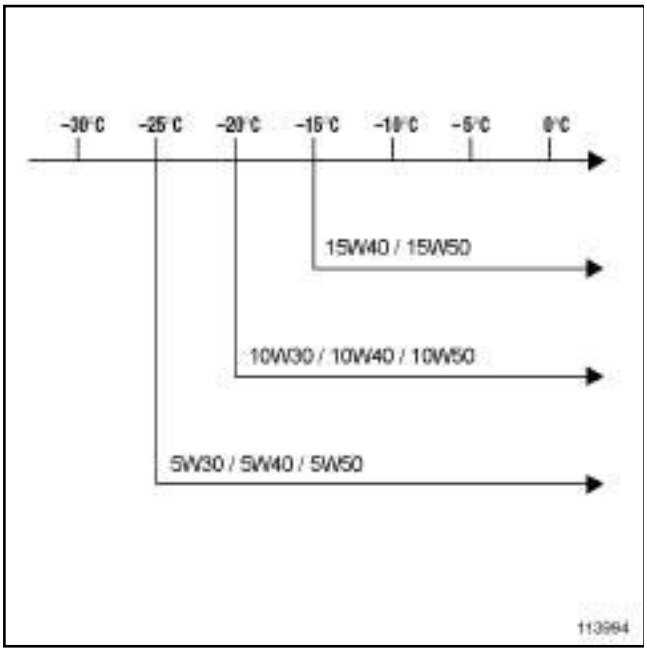

113994

b - DIESEL engine:

RENAULT recommends that for both filling and changing the oil **API CF standard** oil is used.

Oil grade to choose depending on average external temperature:

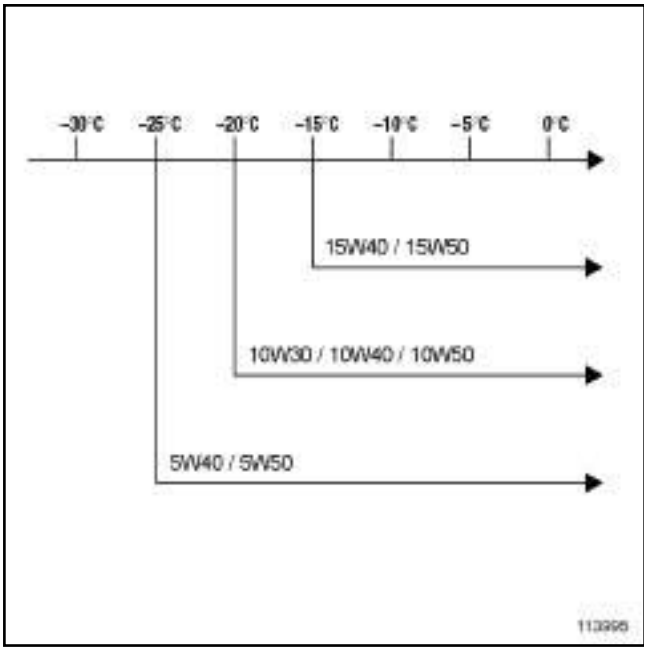

113995

II - TABLE OF OIL INTERCHANGEABILITY:

1 - CCMC standard:

	Standard	**Minimum standard with which it can be replaced**
Petrol	CCMC G4	ACEA A2
	CCMC G5	ACEA A2
DIESEL	CCMC PD2	ACEA A2

2 - ACEA standard:

	Standard	**Minimum standard with which it can be replaced**
Petrol	ACEA A1*	ACEA A3 or ACEA A5*
	ACEA A2	ACEA A3
	ACEA A3	-
	ACEA A5*	ACEA A3
DIESEL	ACEA B1*	ACEA B3 or ACEA B5*
	ACEA B2	ACEA B3
	ACEA B3	ACEA B4
	ACEA B4	-
	ACEA B5*	ACEA B4
	ACEA C3	-

* oil enabling a reduction in fuel consumption.

3 - API standard:

	Standard	Minimum standard with which it can be replaced
Petrol	API SH	API SJ
	API SJ	API SL
	API SL	API SM
	API SM	-
DIESEL	API CF	-

RENAULT

Technical Note 6014A

XXXX

CHECKING THE CHARGING CIRCUIT

Information to assist you in locating faults or malfunctions in one or more components of the charging system.

Comments and special notes on battery maintenance and protection.

77 11 332 282 **Edition 3 - OCTOBER 2005** **EDITION ANGLAISE**

"The repair procedures given by the Manufacturer in this document are based on the technical specifications current when it was prepared.

The procedures may be modified as a result of changes introduced by the manufacturer in the production of the various component units and accessories from which his vehicles are constructed."

All rights reserved by RENAULT s.a.s.

Copying or translating, in part or in full, of this document or use of the service part reference numbering system is prohibited without the prior written authority of RENAULT s.a.s.

© Renault s.a.s. 2005

Contents

Page

16A STARTING - CHARGING

Checking the charging circuit

Description of the charging circuit 16A-1
Use of measuring instruments 16A-2
Information about batteries 16A-3
Information about alternators and starters 16A-4
Charging circuit wiring diagrams 16A-5
Customer complaints 16A-7
Fault finding chart 16A-8
Tests 16A-17

Purpose and components:

The main function of the charging circuit is to produce and distribute the electrical energy required to operate the various electrical consumers on the vehicle (computers, lights, etc.). It is also used to start the engine.

The main components are a battery, an alternator and a starter.

Battery:

The principal purpose of the battery is to provide the powerful current briefly required by the starter to start the engine. For optimum starting, the current supplied by the battery must be sent to the starter with minimum loss. To achieve this, the electrical connections (wires, terminals, connectors, etc.) must be in good condition.

When the engine is not running, the battery must feed the accessories that operate permanently, even with the ignition switched off, such as the alarm, radio codes, computers, etc.

Note:
- A battery must always be fully charged, even when stored.
- Always check the condition of the battery with the Midtronics before handing back the vehicle. Recharge the battery if necessary.

Alternator:

The alternator only operates when the engine is running. Its function is to recharge the battery, and at the same time to supply the electrical power required to operate all the electrical accessories on the vehicle.

Starter:

This turns the engine over to make it start, and requires a very powerful electric current, which the battery must be able to supply.

Wiring and connections:

In view of the currents involved, the electrical connections must be of very high quality. The slightest fault (connection or terminal loose or dirty, old wire, etc.) creates electrical resistance that is not only detrimental to the correct operation of the charging circuit, but may also cause overheating and a fire hazard.

Power-fuse:

Some vehicles are fitted with a power-fuse. This high-power fuse is positioned directly after the battery to protect all the vehicle's electrical components, even the most powerful ones (such as the alternator or the starter).
The power-fuse is positioned either on the positive terminal of the battery, or in the wiring to which it is connected.

Voltage measurement:

Do not use needle voltmeters as they are not accurate enough.
Preferably use instruments with a digital display which are more accurate and better protected against connection errors.
Use tools approved by RENAULT.

Current measurement:

It is best to use a current clamp as it does not require the disconnection of electrical components on the vehicle.

Test equipment:

To check the condition of the battery, use the Midtronics R330 (ELE: 1593). Respect the conditions of use for this tool.

Visual inspection:

- of the mounting: the battery should be mounted correctly (tightening torque shown in the Repair Manual). Excessive tightening is pointless and dangerous because it causes deformation and can even break the battery. Conversely, insufficient tightening gives too much play, which can cause wear on the battery due to friction, and breakage in an impact.
- of the terminals: check that the connectors are pushed well down and securely attached to the battery terminals.
- of the battery: check there are no cracks or breakage, traces of acid, or sulphation of the terminals. If any of these are present, replace the battery and clean the surrounding area. Check that the degassing pipe (depending on version) is correctly connected to the battery vent.

NOTE
- All vehicles are equipped with low water consumption batteries. Opening the battery and topping up the electrolyte are FORBIDDEN.
- Batteries contain sulphuric acid, which is a hazardous chemical.
- Battery charging produces hydrogen and oxygen, which are very flammable gases and thus there is a risk of explosion.
- Any batteries with filling plugs must not be opened under any circumstances but replaced immediately with Renault approved batteries.

Battery recharging:

When parked, vehicles consume power through their permanent consumers and through any accessories fitted as After-Sales options. To keep battery discharging to a minimum, limit the number of times the vehicle is started, periods with the ignition on, doors open, etc., as much as possible.

A discharged battery must be recharged using a Renault approved charger.
Recharging can take up to 24 hours depending on the state of discharge of the battery.

NOTE
- Simultaneous recharging of several batteries in series or in parallel is forbidden.
- It is imperative to disconnect the battery from the vehicle when recharging (the charging voltage can rise to 16.5 V, which can "cook" computers).
- The site at which the charger is used should be taken into consideration to this end (ventilation).

Battery storage:

Even when stored off the vehicle, a battery gradually discharges, and more rapidly if the ambient temperature is high.

For a battery to remain operational for a long time, it must be stored at a temperature close to 15 °C and protected from moisture. To keep the battery correctly charged, it should be completely recharged after a 6 month period of storage.

A battery that has been stored for more than a year must not be fitted to a vehicle.

Replacing a battery:

Always replace a battery with one that has the same electrical and dimensional specifications.

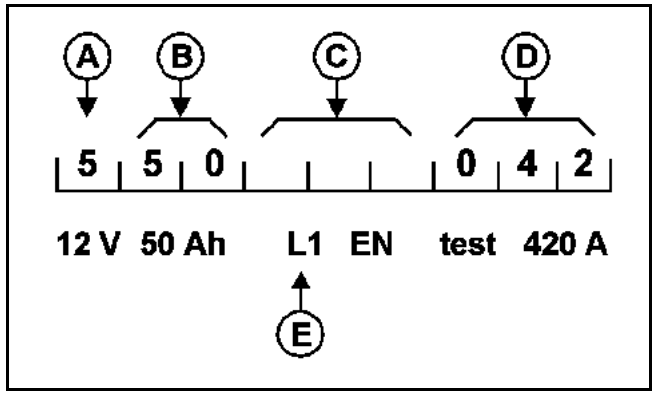

A + 12 V code
B electrical capacity
C position of terminals, size of tray, quality, performance level (if shown)
D Current rating for cold starting (e.g. 042 means 420 A)
E size code (LB = low height)

Types of alternator:

- Non-electronically-managed alternators: these are conventional alternators which only have battery feed and fault warning light outputs.
- Non-electronically-managed alternators with DF output (standard function on Vel Satis, Laguna, Espace 4, Mégane, and present on some older applications): they have one more output than conventional non-electronically-managed alternators. This output informs the computers about the alternator's present charging rate.
- Electronically-managed alternators (function available from the Modus onwards): they have no fault warning light output, or DF output, but they have a multiplex network (BSS network) that carries the signals relating to the operation of the alternator: faults, charging rate, temperature, settings (output voltage), type of alternator, etc. The output voltage of these alternators is computer-managed via the BSS network.

Output voltage:

For alternators which are not electrically-managed, the alternator output voltage is 14.4 V ± 0.3 V at **20°C** (decreases with the temperature of the alternator by approximately 10 mV/°C).

Some alternators have charging rate variation management. When current is drawn suddenly (main beam headlights, de-icing, etc. switched on), the current supplied by the alternator does not change immediately, but increases gradually. Thus, the charging rate of these alternators can change from 0 to 100% in a few seconds (depending on the make and the speed of rotation of the alternator). During this transition period, the alternator's output voltage is not stable.

Note:
Wait 20 seconds after switching any of the vehicle's electrical consumers on or off before taking a measurement.

Information about starters:

IMPORTANT
- Always disconnect the battery earth before removing the starter.
- Do not operate the starter for a period of more than 20 seconds.
- After three attempts at starting, wait 10 minutes to allow the starter to cool.

Alternator with DF output (Mégane II):

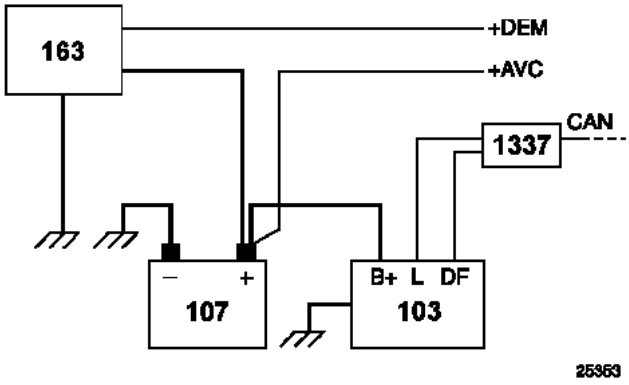

Alternator with DF output (Espace IV P9X):

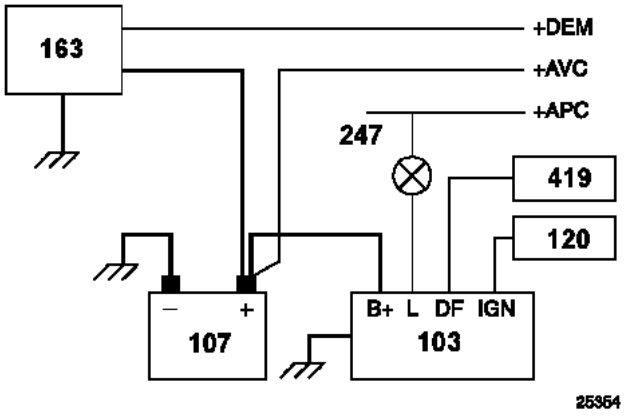

163: starter
107: battery
103: alternator
1337: USM = Protection and Switching Unit
419: climate control computer
120: injection computer
247: charging circuit fault warning light on the instrument panel

Alternator terminals:
– B +: alternator power output
– L: bulb output
– DF: output giving the alternator charge rate
– IGN: excitation control

Alternator with DF output (Espace IV except P9X, Vel Satis F4R and P9X, Laguna II ph2 F4R, K4M, G9T605, G9T703, F9Q758):

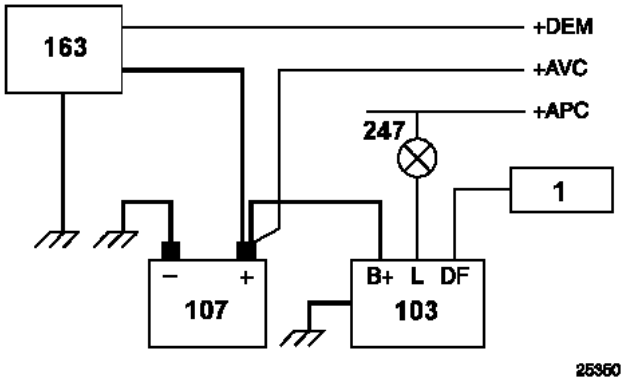

Non-electronically-managed alternator (all other vehicles):

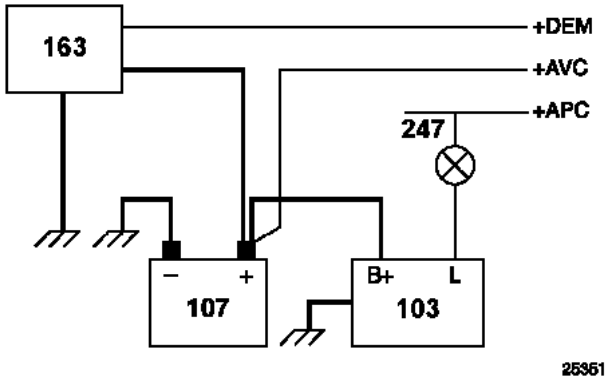

163: starter
107: battery
103: alternator
1: for Espace IV except P9X: climate control computer. For Vel Satis and Laguna II ph2: injection computer
247: charging circuit fault warning light on the instrument panel

Alternator terminals:
– B +: alternator power output
– L: bulb output
– DF: output giving the alternator charge rate

FAULT WARNING LIGHT FAULT

THE FAULT WARNING LIGHT DOES NOT COME ON WHEN THE IGNITION IS SWITCHED ON WITH THE ENGINE OFF	ALP 1
THE FAULT WARNING LIGHT COMES ON OR THE MESSAGE 'CHARGING CIRCUIT FAULT' APPEARS WHEN THE ENGINE IS RUNNING	ALP 2

FAULT WHEN THE STARTER IS OPERATING:

– THE SPEED OF ROTATION OF THE STARTER DROPS RAPIDLY – THE STARTER ROTATES SLOWLY FROM THE OUTSET – THE STARTER CAUSES THE WARNING LIGHTS ON THE INSTRUMENT PANEL TO BECOME VERY DIM	ALP 3
THE STARTER DOES NOT RUN	ALP 4
THE STARTER TURNS BUT DOES NOT ENGAGE	ALP 5

DIFFICULT STARTING

– AFTER THE VEHICLE HAS BEEN IMMOBILE FOR SEVERAL DAYS – AFTER FREQUENT SHORT JOURNEYS – WHEN COLD	ALP 6

OTHER

THE ENGINE IDLE SPEED IS NOT STABLE, TENDENCY TO STALL	ALP 7

ALP 1	The fault warning light does not come on when the ignition is switched on with the engine off

Applicability: all vehicles except Laguna II and Vel Satis

NOTES	Use a standard 12 V/1.2 W warning light test bulb (Important: risk of irreparable damage to the alternator if a higher wattage bulb is used).

Note:
On the Laguna II and Vel Satis, there is no fault warning light; it is therefore normal that it does not come on.

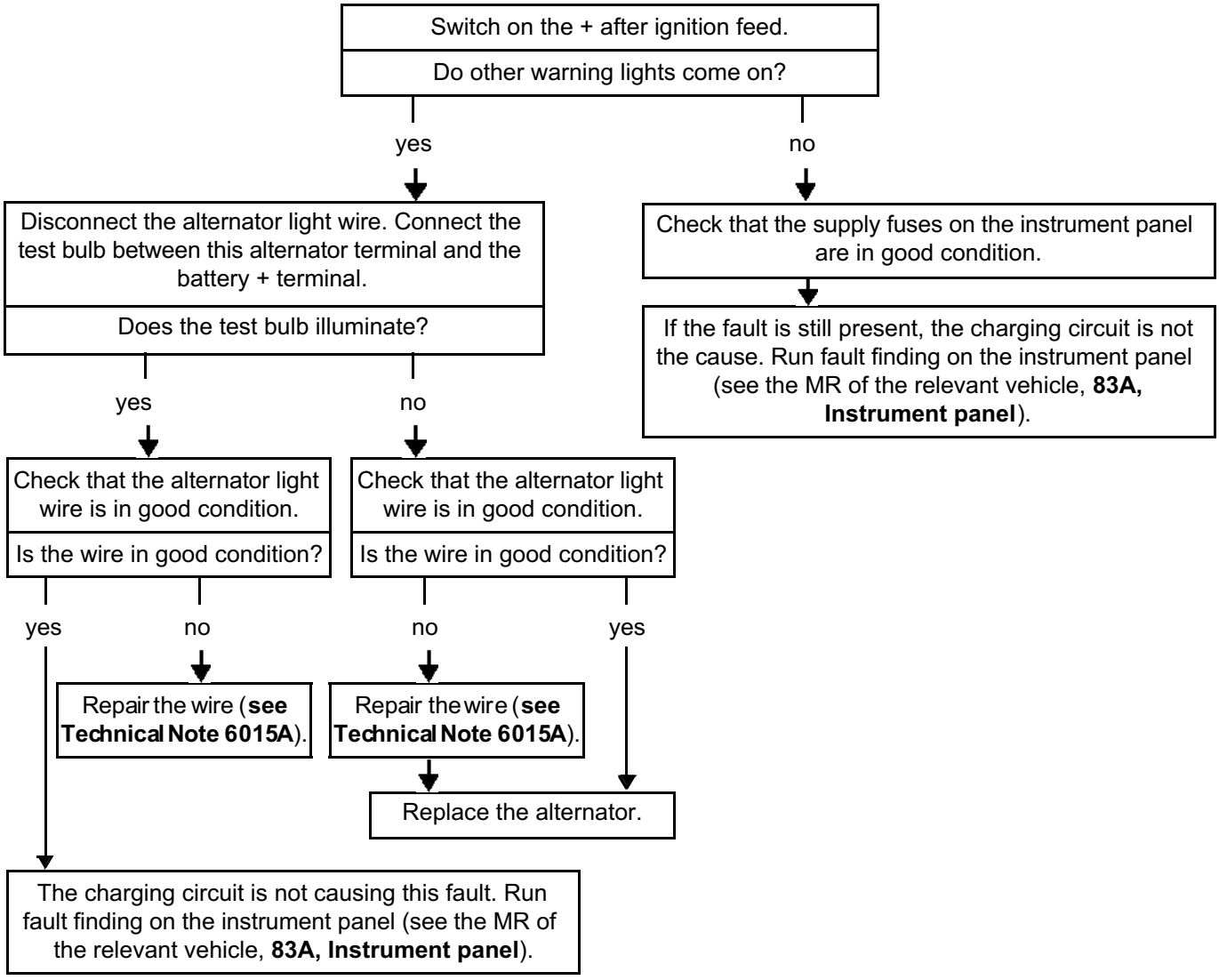

AFTER REPAIR	Check that the fault is no longer present. Test the battery (T3).

ALP 2	The fault warning light comes on or the message "Charging circuit fault" appears when the engine is running

Applies to: All types

NOTES	Run a full check with the diagnostic tool before starting this test. Check that the battery terminals are correctly tightened and in good condition (see the MR of the relevant vehicle, **80A, Battery, Battery: Removal - refitting**). Use a standard 12 V/1.2 W warning light test bulb (Important: risk of irreparable damage to the alternator if a higher wattage bulb is used).

Measure the voltage at the battery terminals with the engine running and all consumers switched off.

Voltage value?

- < 13.5 V → Test the alternator supply (T4).
- between 13.5 V and 14.8 V → Disconnect the alternator light wire. Connect the test bulb between this alternator terminal and the battery + terminal.
- > 14.8 V → Replace the alternator.

Does the test bulb illuminate?

- yes → Replace the alternator.
- no → Check the insulation against earth of the alternator bulb wire (between the bulb track with the connector disconnected from the alternator and the chassis earth).

If the fault is still present, test the alternator supply (T4).

If this does not resolve the fault, run fault finding on the instrument panel (see MR of the relevant vehicle, **83A, Instrument panel**).

AFTER REPAIR	Check that the fault is no longer present. Test the battery (T3).

ALP 3	**– The speed of rotation of the starter drops rapidly** **– The starter rotates slowly from the outset** **– The starter causes the warning lights on the instrument panel to become very dim**

Applies to: All types

NOTES	Check the condition of the battery (T3). Test the wiring (T2).

If the fault is still present, replace the starter.

AFTER REPAIR	Check that the fault is no longer present. Test the battery (T3).

ALP 4	The starter does not turn

Applies to: All types

NOTES	Test the condition of the battery (T3). Check the immobiliser (see the MR of the relevant vehicle, **82 or 87**). Test the condition of the power-fuse (T1), if fitted to the vehicle. Check that the engine is not jammed.

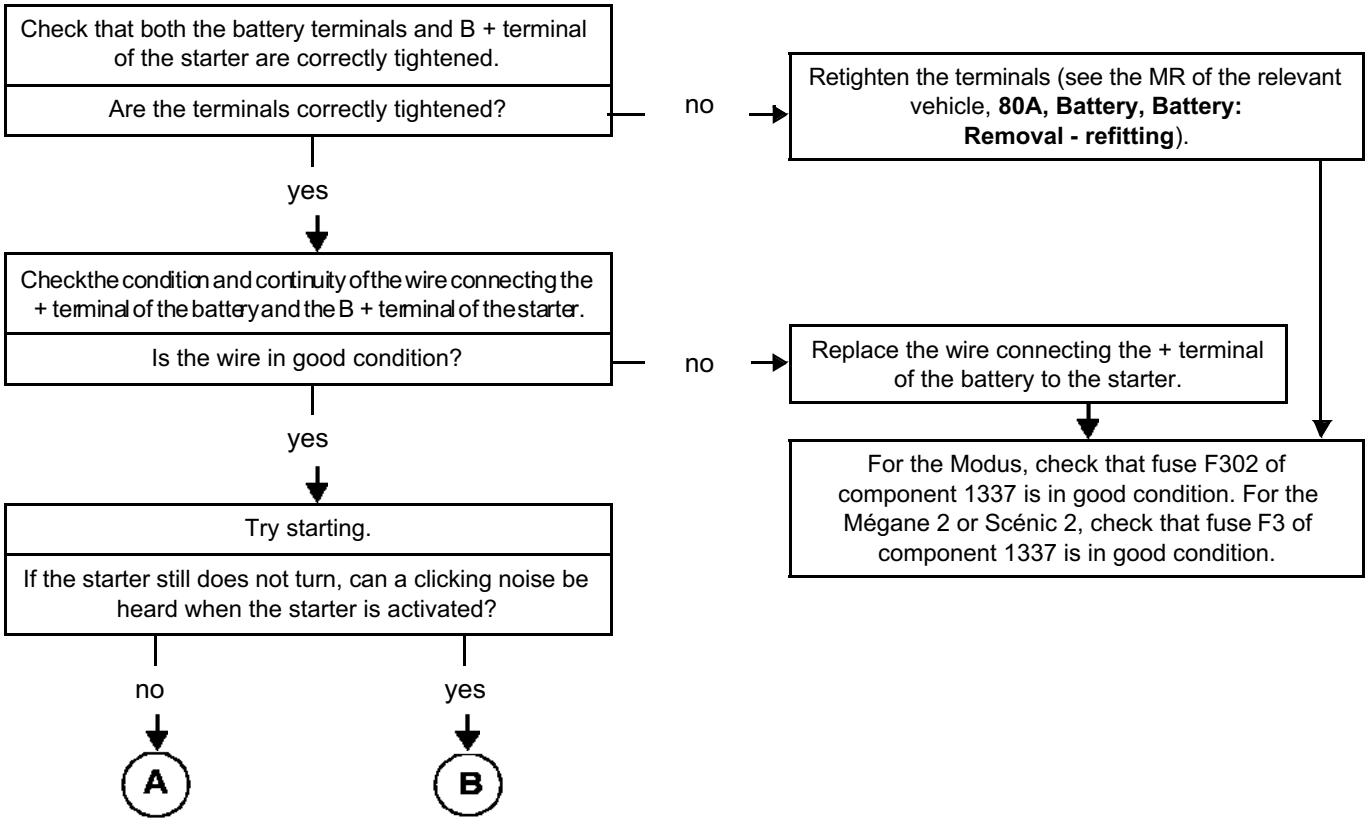

AFTER REPAIR	Using the diagnostic tool, check that no faults have appeared on the computers. Clear the faults if necessary. Check that the fault is no longer present. Test the battery (T3).

ALP 4 CONTINUED 1	

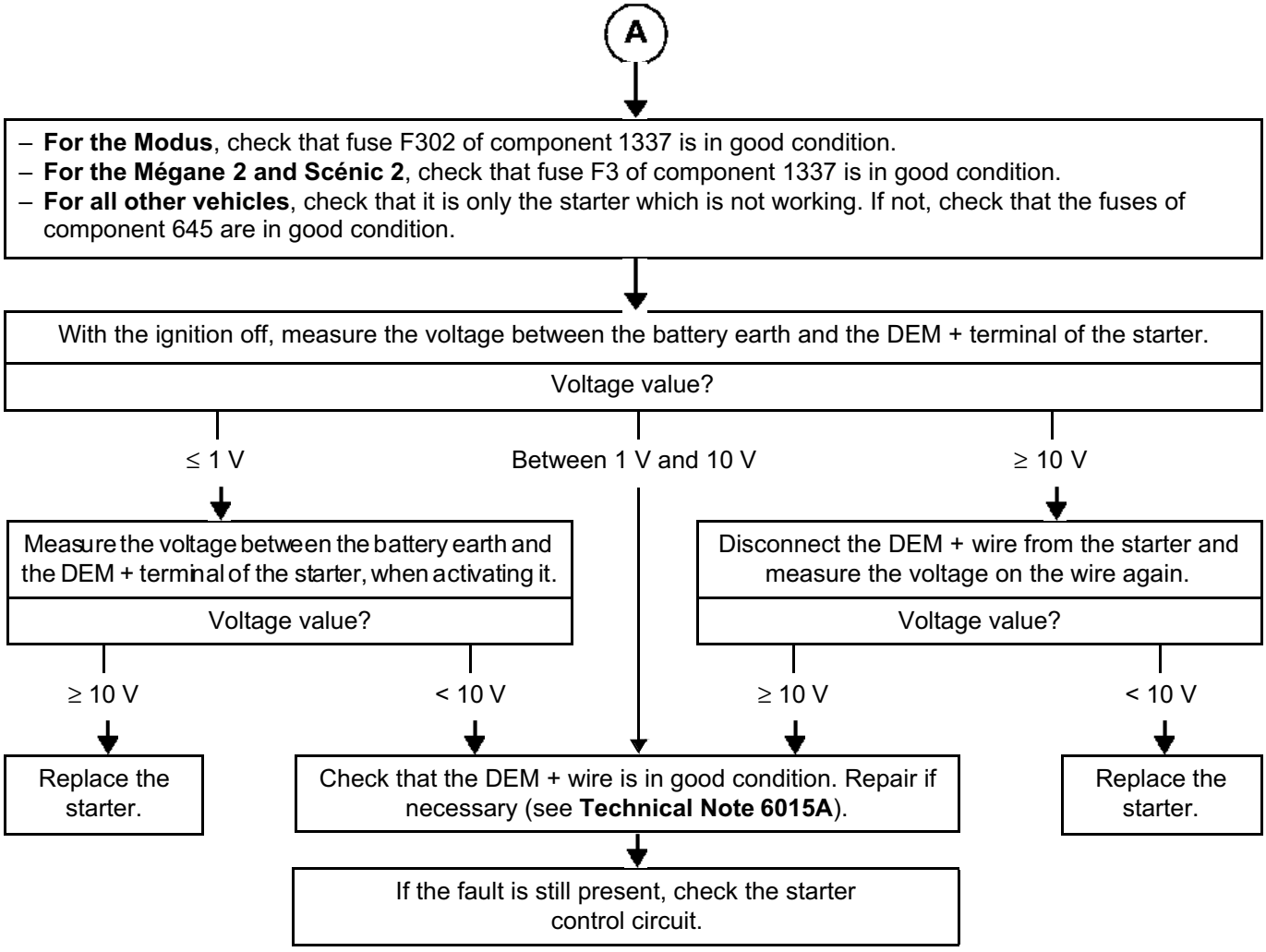

AFTER REPAIR	Using the diagnostic tool, check that no faults have appeared on the computers. Clear the faults if necessary. Check that the fault is no longer present. Test the battery (T3).

ALP 4 CONTINUED 2	

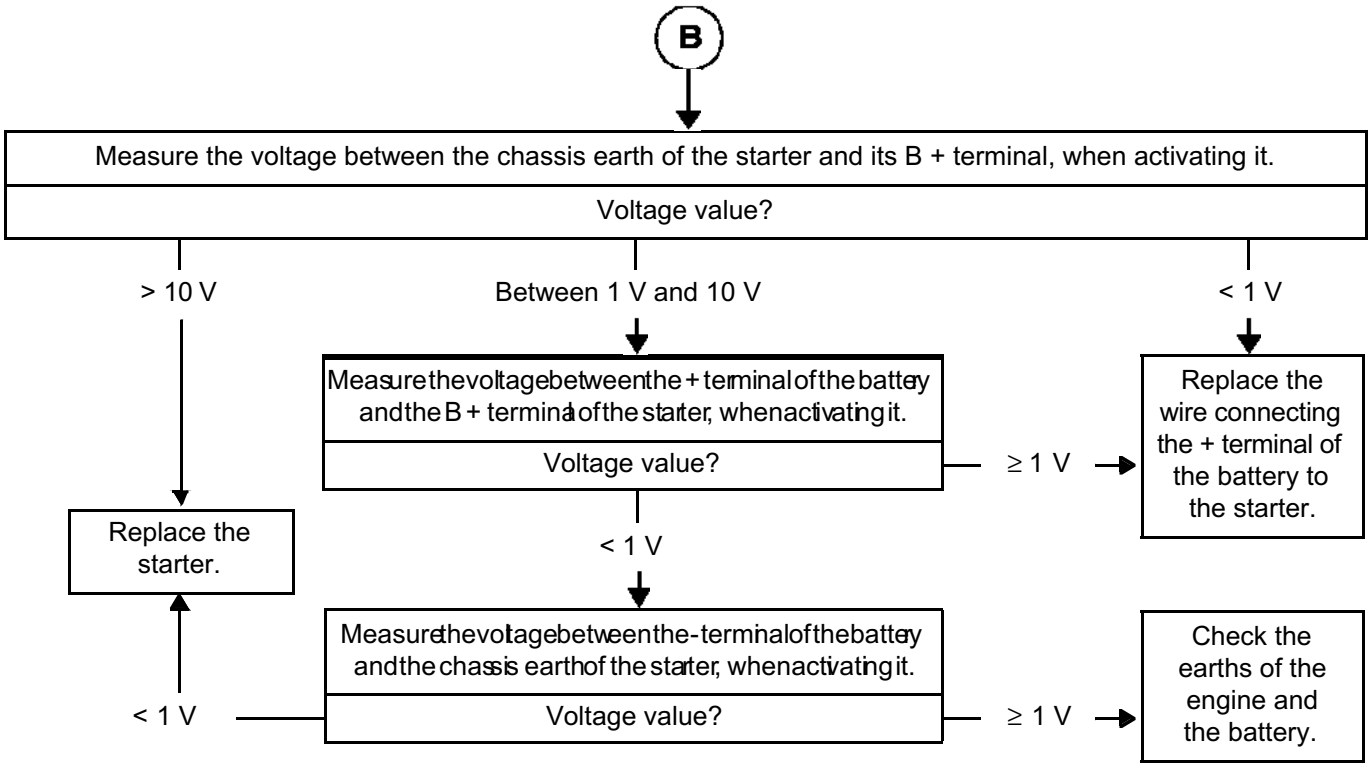

AFTER REPAIR	Using the diagnostic tool, check that no faults have appeared on the computers. Clear the faults if necessary. Check that the fault is no longer present. Test the battery (T3).

ALP 5	The starter turns but does not engage

Applies to: All types

NOTES	Disconnect the battery earth before handling.

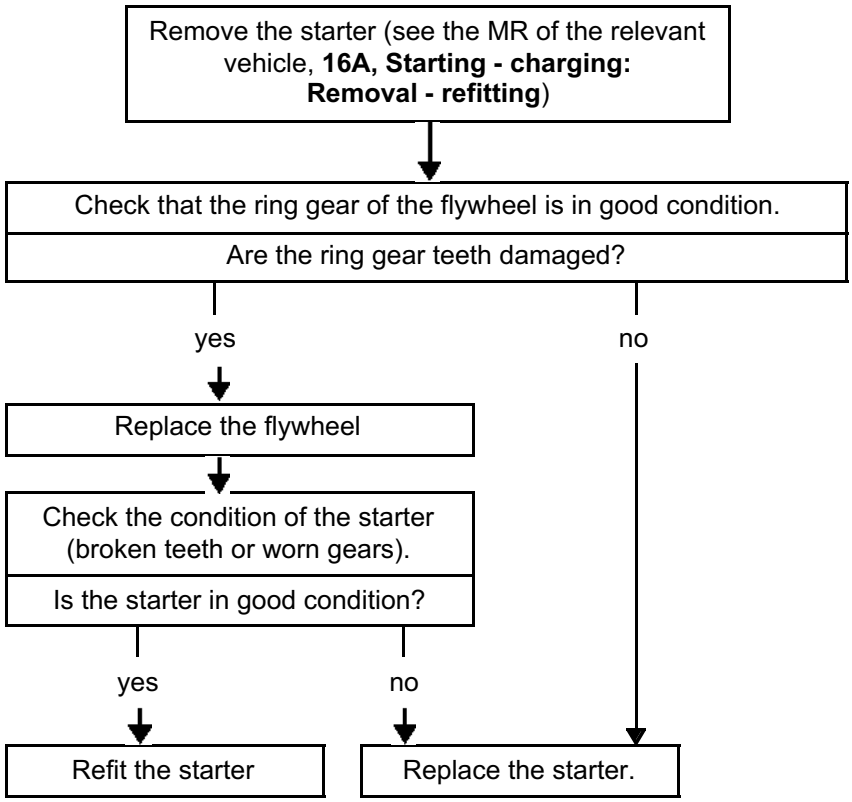

AFTER REPAIR	Check that the fault is no longer present. Test the battery (T3).

ALP 6	**Difficult starting:** **– After the vehicle has been immobile for several days** **– After frequent short journeys** **– When cold**

Applies to: All types

NOTES	Check the condition of the battery (T3).

Test the alternator supply (T4).

↓

If the fault is still present, check the wiring (T2).

↓

If the fault is still present, the charging circuit is not the cause. Check the ignition, preheating (diesel), etc.

AFTER REPAIR	Check that the fault is no longer present. Test the battery (T3).

ALP 7	The engine idle speed is not stable, tendency to stall

Applicability: Mégane II, Vel Satis F4R and P9X, Espace IV, Laguna II ph2 F4R, K4M, G9T605, G9T703, F9Q758.

NOTES	Check the condition of the battery (T3). Check that the battery terminals are correctly tightened and in good condition (see the MR of the relevant vehicle, **80A, Battery, Battery: Removal - refitting**).

Engine at idle speed, all consumers off, display the value of parameter **Alternator charge signal** using the diagnostic tool.

Value of the parameter?

- ≥ 98% → Switch off the engine and connect a current clamp onto the B + wire of the alternator. Switch on the engine again and run it at idle speed, with all consumers switched off

  Value of measured current?

  - ≥ 20 A → Check that all the consumers are definitely switched off. If the fault is still present, then one of the vehicle's electrical components has an abnormal consumption. Disconnect the fuses one by one and check the current drawn to identify which one.
  - < 20 A → Switch off the engine and check that the configuration of the alternator in the Protection and Switching Unit or the climate control computer is correct, using the diagnostic tool.

    Is the configuration correct?

    - yes → Replace the alternator
    - no → Reconfigure the computer correctly.
- < 98% → The charging circuit is not causing this fault. Check the injection, the idle speed, etc.

AFTER REPAIR	Using the diagnostic tool, check that no faults have appeared on the computers. Clear the faults if necessary. Check that the fault is no longer present. Test the battery (T3).

TEST 1	Test the condition of the power-fuse

Applicability: Vehicles fitted with a power-fuse

NOTES	None

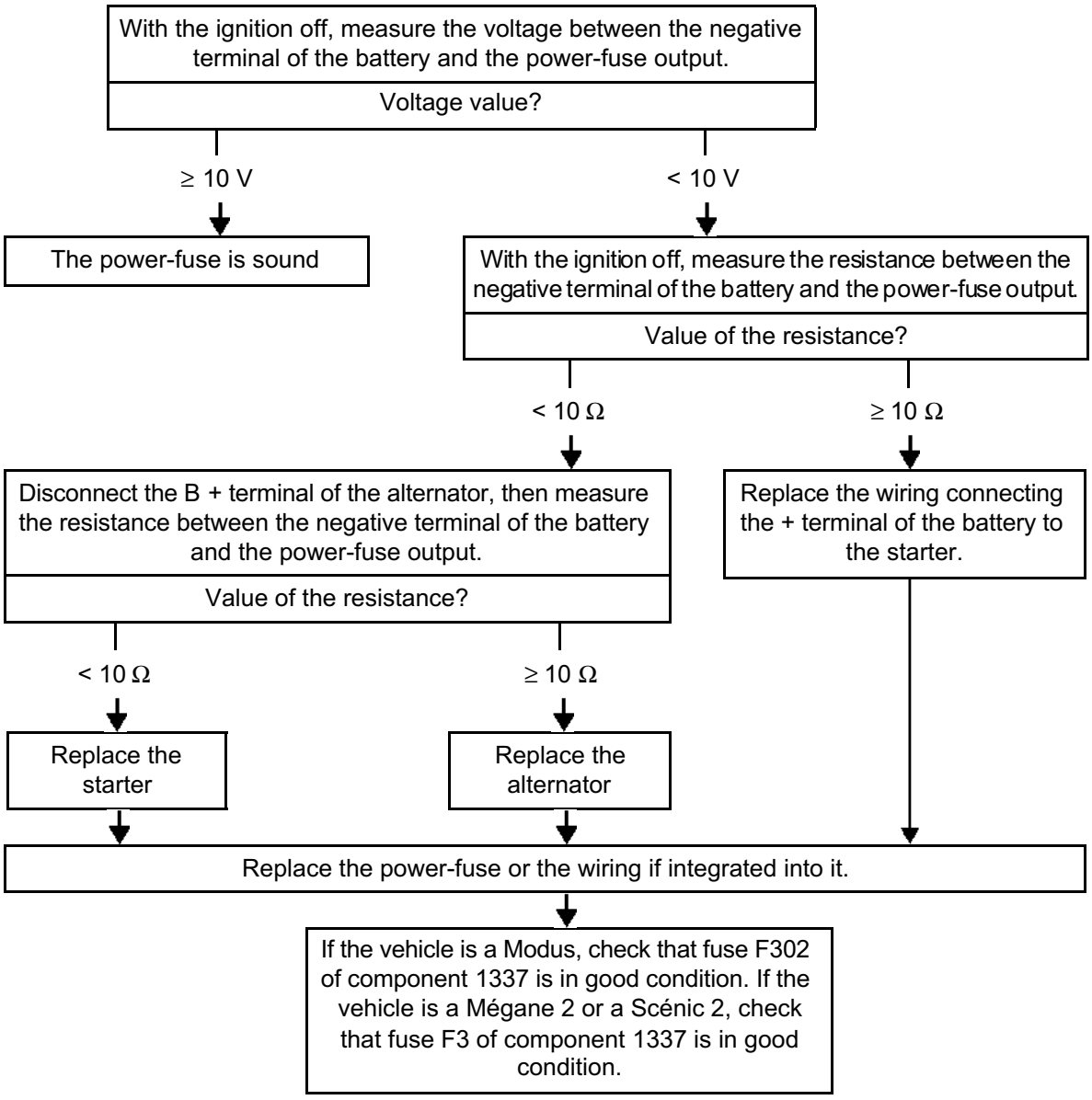

TEST 2	Wiring test

Applicability: All types

NOTES	None

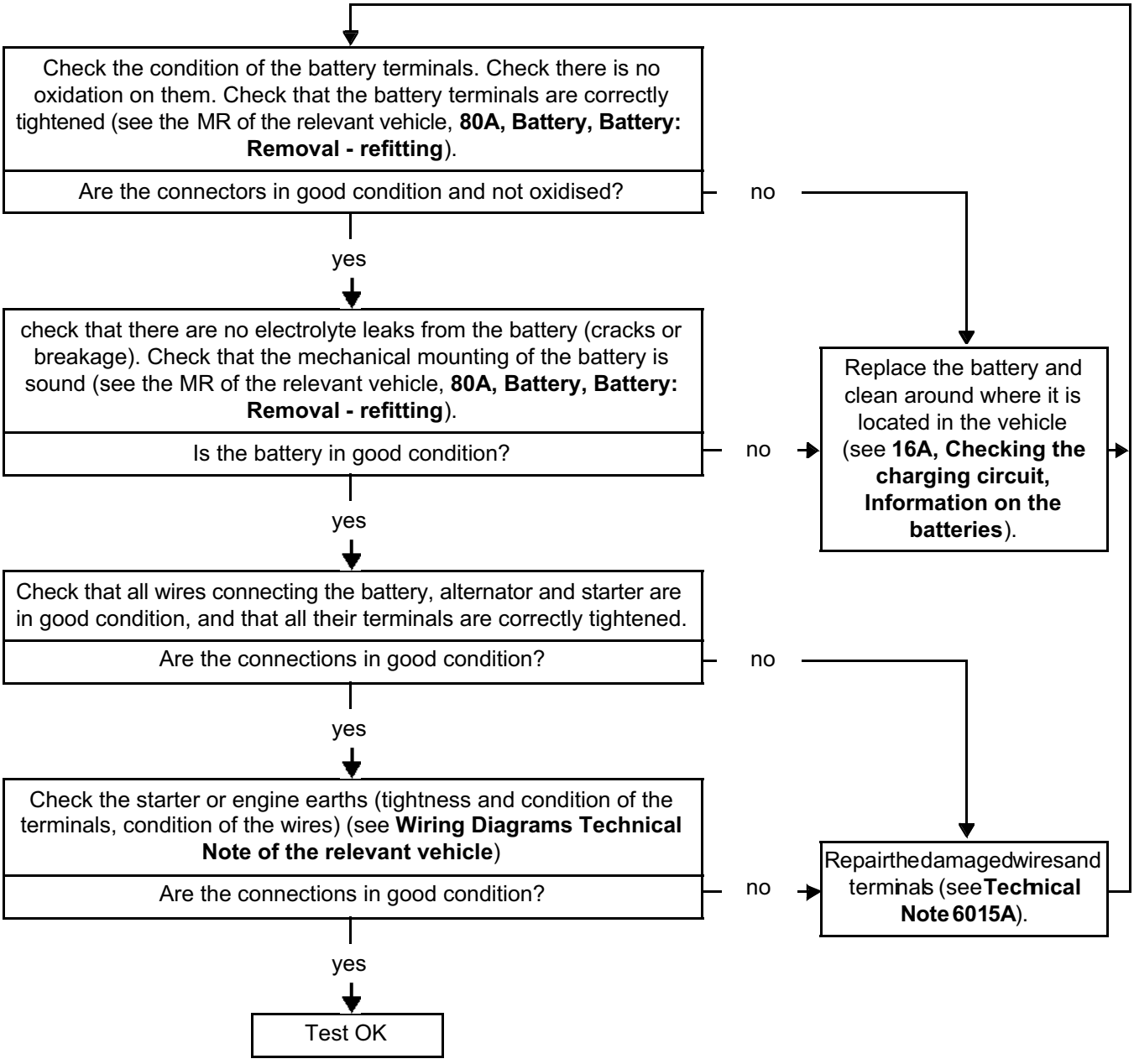

TEST 3	Battery condition test

Applicability: All types

NOTES	Switch off the ignition before carrying out this test

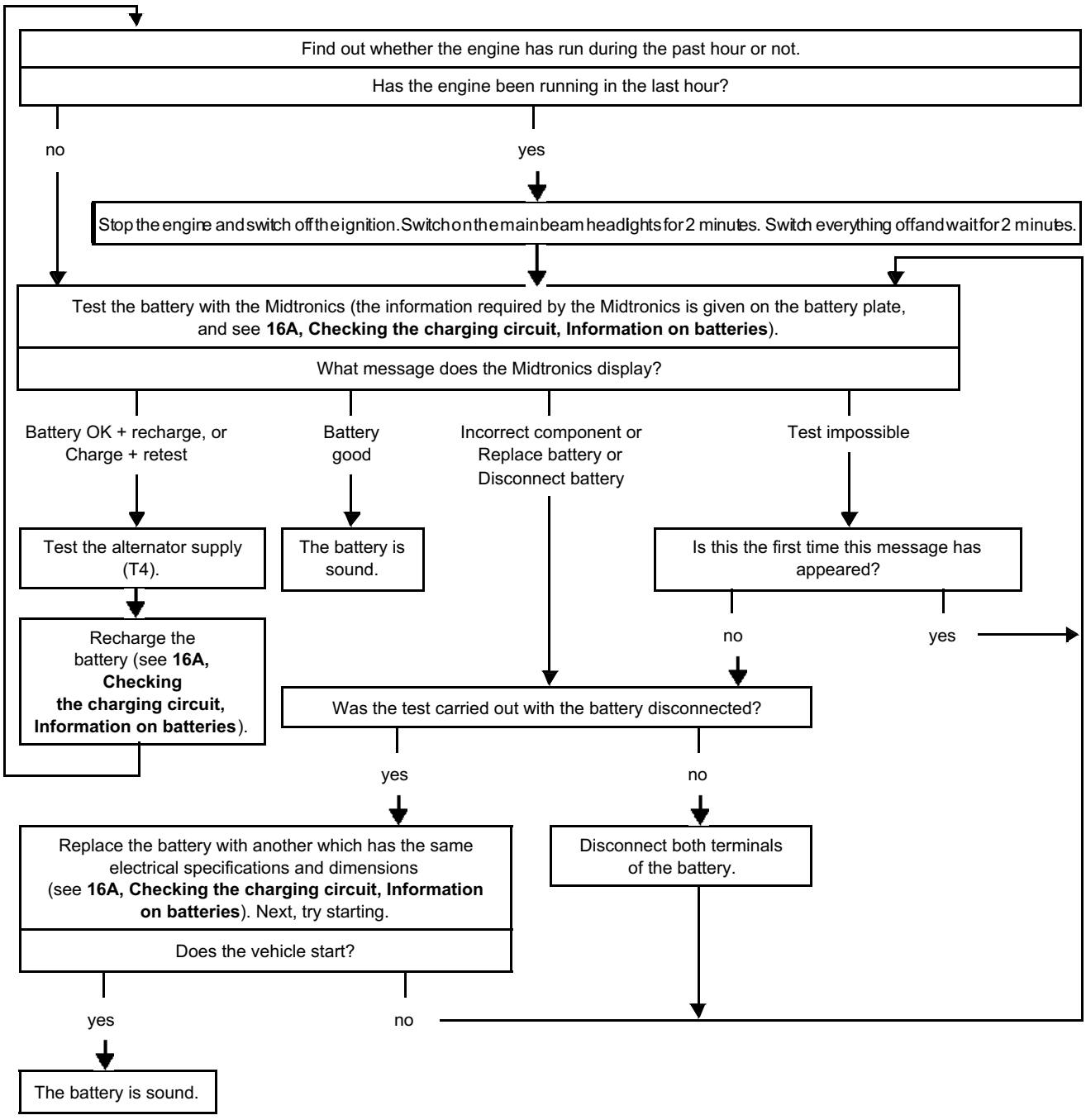

TEST 4	Test the alternator supply

Applicability: All types

NOTES	If the vehicle does not start, use a booster.

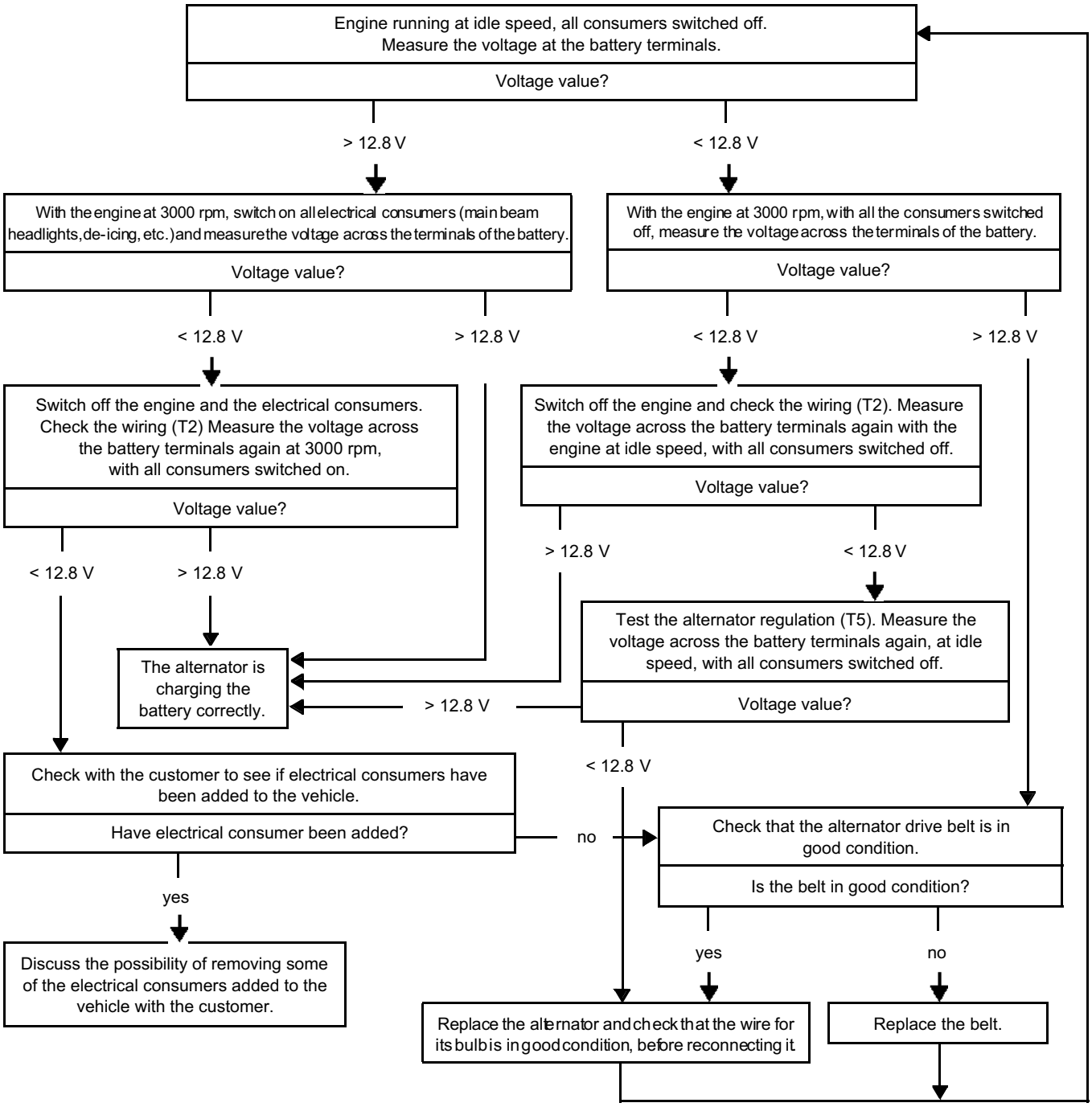

TEST 5	Test the alternator regulation

Applicability: All types

NOTES	Carry out a battery test (T3) and leave the engine running for 10 minutes before carrying out this test.

Note:
Pay attention to the values of the voltages to be measured as they are not the same for the P9X.

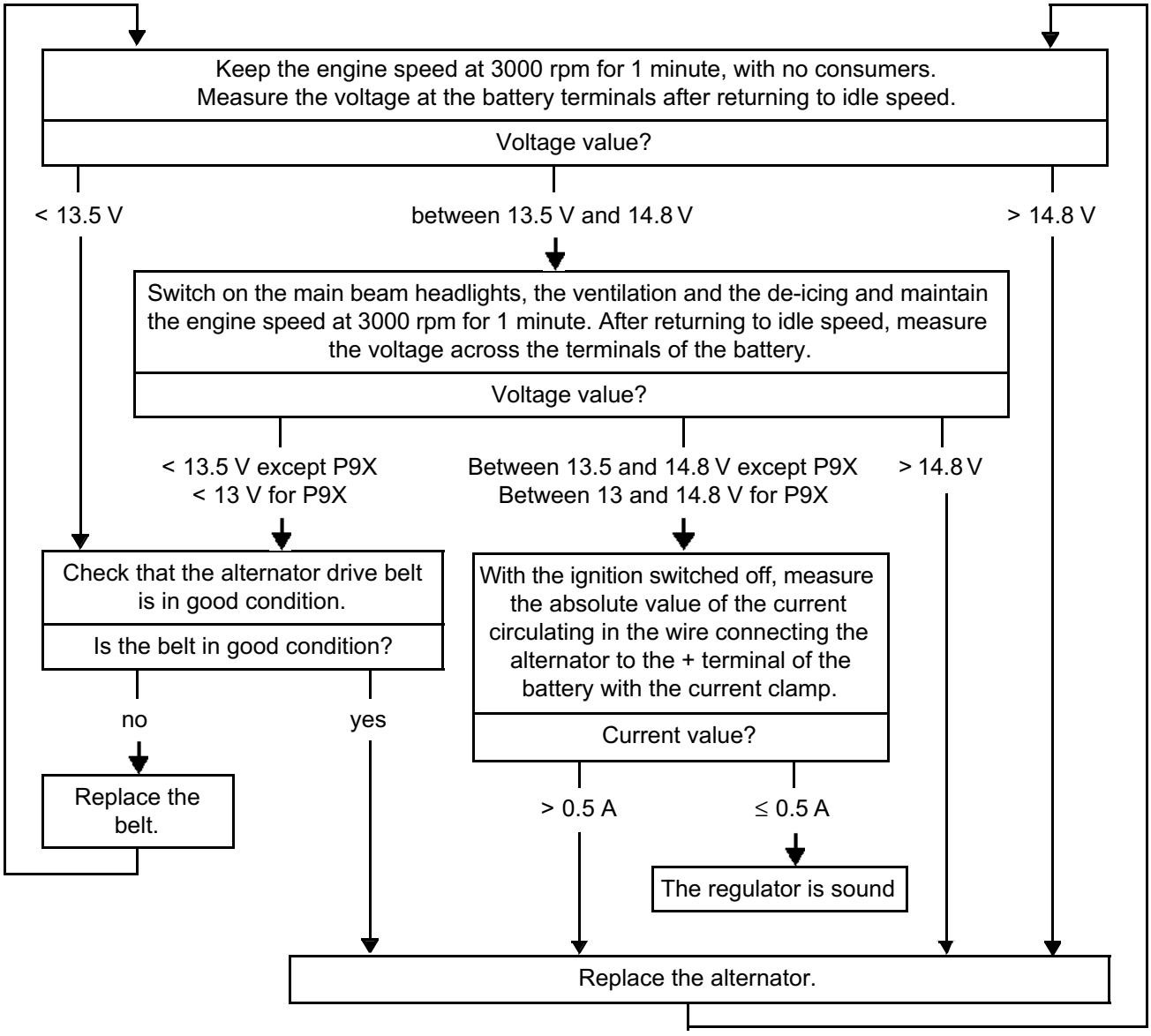

RENAULT

Technical Note 6015A

All types

Sub-sections concerned: 88A - 88B - 88C

ELECTRICAL WIRING REPAIR

This note cancels and replaces Technical Notes 8074 and 8075

77 11 332 302 **September 2005** **EDITION ANGLAISE**

"The repair procedures given by the Manufacturer in this document are based on the technical specifications current when it was prepared.

The procedures may be modified as a result of changes introduced by the manufacturer in the production of the various component units and accessories from which his vehicles are constructed."

All rights reserved by RENAULT s.a.s.

Copying or translating, in part or in full, of this document or use of the service part reference numbering system is prohibited without the prior written authority of RENAULT s.a.s.

© Renault s.a.s. 2005

ELECTRICAL WIRING REPAIR

Contents

Page

88A WIRING

Wiring: Precautions for repair 88A-1
Wiring repair kit: General information 88A-5
Wiring repair kit: Description 88A-6
Wiring repair kit: Use 88A-9
Wiring: Repair 88A-14
Wiring: Check 88A-23
Connector: Repair 88A-26

88B MULTIPLEXING

Multiplex network: Repair 88B-1

88C AIRBAGS AND PRETENSIONERS

Airbag and pretensioner wiring: Repair 88C-1

IMPORTANT
This note authorises the repair of electrical wiring in very specific cases only and under certain conditions.
Check that the repair in question is authorised and that the repair conditions are respected.

1 - Result of the fault finding procedure.

Note:
During repair, check that you have the most recently updated version of the Technical Note.

A preliminary fault finding procedure has enabled a wiring fault to be identified. Follow the investigation procedure below.

Disconnect the battery (see the **MR corresponding to the vehicle, 80A, Battery, Battery: Removal - Refitting**).

Remove the components necessary to access the area to be worked on. The operation area must allow the pliers and the heat gun to be used, without blocking visibility.

IMPORTANT
If the damaged section is not sufficiently accessible, remove the wiring concerned and repair on the bench.

When the damaged section is sufficiently accessible, detach the wires to be repaired from the main wiring.

IMPORTANT
Check if there is a sensitive line. These cases are listed in the specific procedures reference table in this section.
If there is a sensitive line, replace the defective wiring or apply the specific procedure, if one exists. These procedures are indicated in the specific procedures reference table in this section.

Check that the fault is located more than 10 cm from the connector.

NOTE
If the damaged section is located less than 10 cm from the connector, replace the defective wiring, unless a wiring-connector kit (connector with wires) exists. In this case, use the kit to replace the damaged section and the connector.

This note does not authorise operations directly on the connectors and electrical contacts. Only wiring-connector kits allow the replacement of a connector. These kits can have associated procedures.

Note:
To check whether there is a wiring-connector kit, consult DIALOGYS. These kits are generally linked to specific wiring or function diagrams.

Note:
If the fault is located at the electrical contact (in the connector) and if it is linked to a corrosion or heating fault, replace the wiring or fit the wiring-connector kit. Also check the connector complement.

Note:
In all cases, pay particular attention to supply and earth lines and their tightening (refer to the tightening torques in the MRs concerned).

After having carried out the checks (outlined in the **Summary flowchart of the investigation procedure**), if the repair is authorised, and it does not require a specific procedure, carry out the generic procedure (see **88A, Wiring, Wiring: Repair**).

Note:
If you have been referred to this note by an MR, Technical Note or removal-refitting procedure, apply the repair procedure adapted to the case in question. Either the generic repair procedure (see **88A, Wiring, Wiring: Repair**), or a specific procedure listed in the specific procedures reference table in this section.

2 - Specific procedures reference table.

- **Guidelines for reading the tables below:**

  – If not otherwise stated, consider all components or electrical connections which have a connection to the functions or equipment listed. For example: For the electric power assisted steering, the function is not specified. It is prohibited to carry out operations on any wire attached to the electric power assisted steering.

  – The recommendations for the specific cases take precedence over the general cases. For example: For an operation on a pair of twisted wires (general case) for the airbag function (specific case), the specific case refers back to the repair procedure for Airbags and pretensioners, and the general cases refer back to the repair procedure for multiplex lines. It is the specific cases which take precedence; follow the referral to the repair procedure for Airbags and pretensioners.

- **Specific cases:**

Functions or components	Details	Instructions
Diesel or petrol engine and transmission assembly	Pedal potentiometer	Change the wiring
	Cylinder sensor	Change the wiring
	TDC sensor	**See OTS**
	Rail pressure regulator	Change the wiring
	Fuel flow actuator on the pump	Change the wiring
	Injectors	Change the wiring
	Throttle valve connections	Change the wiring
	Coils	Change the wiring
Multiplex network	CAN	(see **88B, Multiplex, Multiplex network: Repair**)
Airbags and pretensioner	Under seat connector	(see **88C, Airbags and Pretensioners, Airbag and Pretensioner Wiring: Repair**)
	Airbag detonator (squib) connector	(see **88C, Airbags and Pretensioners, Airbag and Pretensioner Wiring: Repair**)
	Pretensioner (squib) connector	(see **88C, Airbags and Pretensioners, Airbag and Pretensioner Wiring: Repair**)
	Airbag computer connector	(see **88C, Airbags and Pretensioners, Airbag and Pretensioner Wiring: Repair**)
	Airbag sensor	Change the wiring
	Other airbag lines	(see **88C, Airbags and Pretensioners, Airbag and Pretensioner Wiring: Repair**)
ABS	ABS sensor	Change the wiring
	Other ABS lines	Change the wiring
EPAS	/	Change the wiring

● **General cases:**

Functions or components	Details	Instructions
Wiring harness	Number of damaged wires 10 or fewer	(see **88A, Wiring, Wiring: Repair**)
	Number of damaged wires more than 10	Change the wiring
Equipment and predispositions specific to commercial vehicles and conversions	/	Change the wiring
Connections or associated components	/	(see **88A, Wiring, Connector: Repair**)
Splices	Splice with more than 3 wires	Change the wiring
	3-wire splice which does not need sealing	(see **88A, Wiring, Wiring: Repair**)
	Splice with 3 wires or more, which needs sealing (engine and underbody areas and damp areas of the doors and boot)	Change the wiring
Wires outside the loom	Sheathed wires	Change the wiring
	Shielded wires	Change the wiring
	Twisted wires	**if the wire cross-sections are 0.5 mm^2:** (see **88B, Multiplex, Multiplex network: Repair**)
	Flat cable	Change the wiring
	Wires with specific thermal protection	Change the wiring
	Wires with copper cross-section less than 0.35 mm^2	Change the wiring
	Wires with copper cross-section greater than 6 mm^2	Change the wiring
	Wires damaged less than 10 cm from the connector	(see **88A, Wiring, Connector: Repair**)

3 - Summary flowchart of the investigation procedure defined in this section.

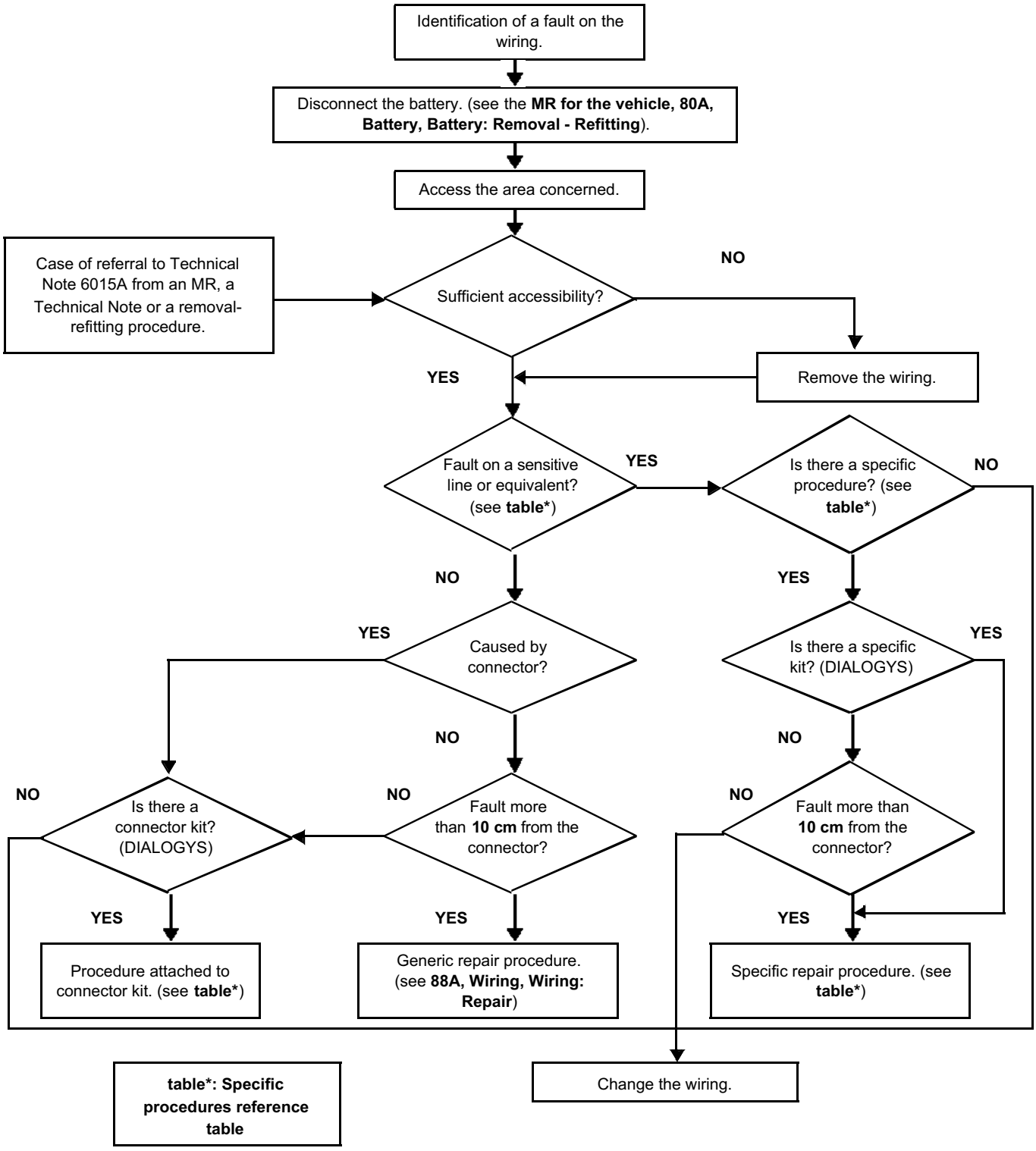

1 - Purpose and applications.

Description of the content of the Wiring repair kit case as well as the procedure and the field of application.

The kit enables wiring which is damaged or has cut electrical wires to be repaired while retaining its operating characteristics.

It also allows wiring-connector kits to be used.

All electrical cables and wires with cross-sections between **0.35 mm^2** and **6 mm^2**, except sensitive lines (defined in this document), are affected.

IMPORTANT
Repair of sensitive lines is prohibited using the generic procedure alone. This repair can be authorised on condition that it is complemented with a suitable procedure (see **88A, Wiring, Wiring: Precautions for repair**).

The technical nature and the sensitivity of this type of operation requires the adapted equipment contained and described in the Wiring repair kit case.

NOTE
Using tools or components which have not been recommended is strictly forbidden when repairing wiring.

IMPORTANT
For sensitive lines, only automotive electricians, technician agents or cotechs (Level 2 Electricity as a minimum) can carry out the repair described in this note.

2 - Terminology.

● **Wiring-connector kit.**
Kit usually made up of a connector, the cells of which are fitted with crimped wires along with sleeves for joining.

● **Multiplex lines or connections.**
Principal or secondary CAN network lines linking the computers together and made up of twisted pairs of stranded wires.

● **Turns or twists.**
For twisted pairs:
One turn (twist) = (**A**)

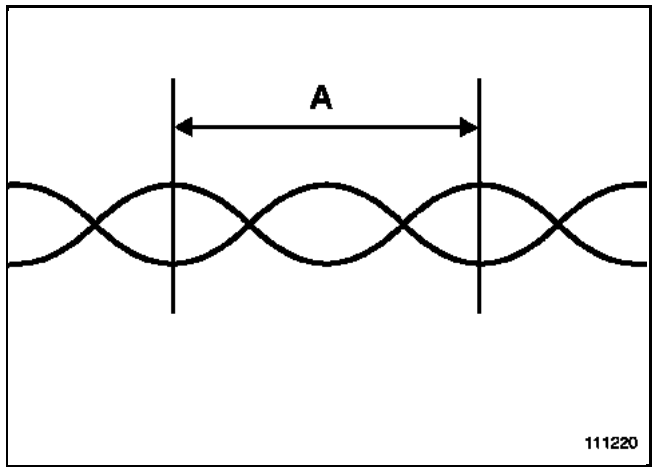

1 - Case and label.

● **Case (77 11 229 893).**

The case contains all the components described in this section. A label lists their part numbers.

● **Label.**

The label affixed inside the case is made up of 4 sections printed in English and French.

In the upper section, at (**A**) is the title and number of the note. In (**B**) are the After-Sales part numbers (for the network) and MABEC code (for factories) which enables the kit to be restocked with consumables or new tools or a new kit to be ordered.

In the lower section (**C**) is a table (not exhaustive) which helps in selecting the correct sleeve, with a summary of the recommendations for each case. And in (**D**) are the recommendations for use.

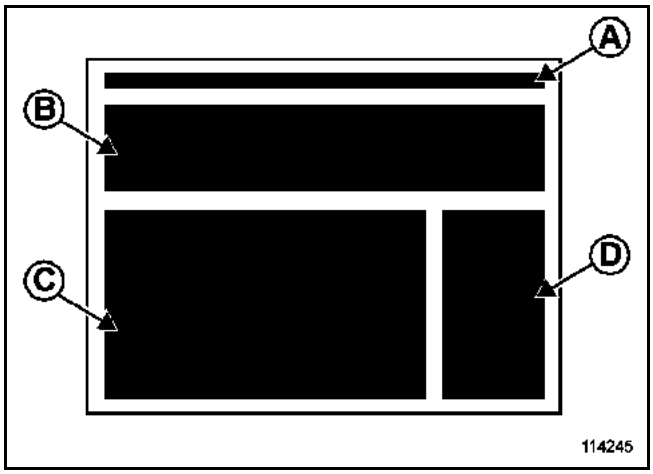

2 - Tools.

● **Stripping pliers (77 11 230 416).**

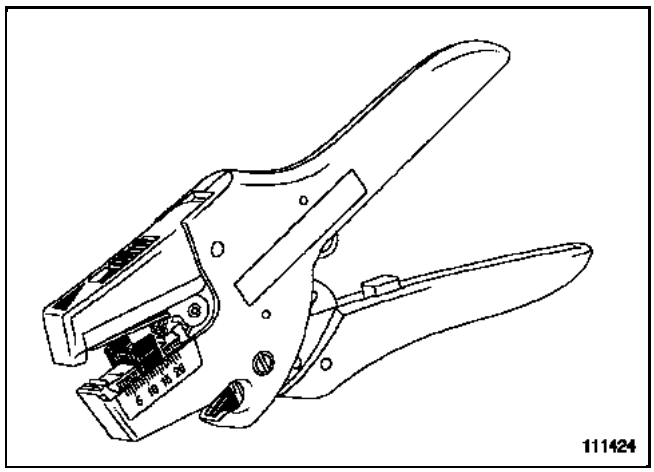

These are automatic pliers which enable an electrical conductor up to a maximum cross-section of **6 mm^2** to be cut or stripped.
The length of the stripped section can be adjusted up to **20 mm**.

The operating instructions for this kit are described in this document (see **88A, Wiring, Wiring repair kit: Use**).

● **Crimping pliers (77 11 230 417).**

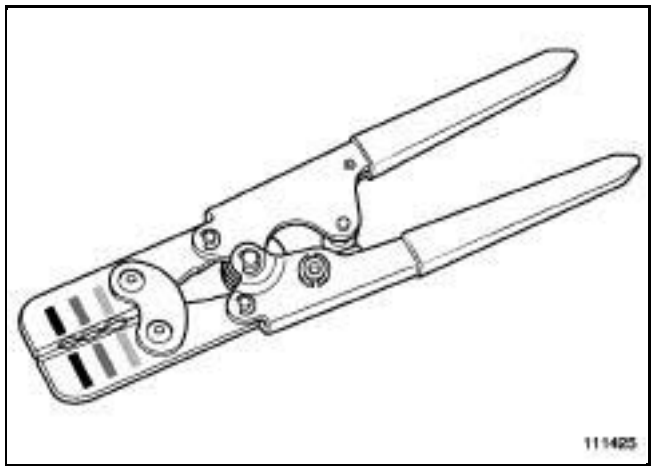

The crimping pliers have three sizes of jaw (red, blue and yellow) which correspond to the crimp sleeves. These pliers are recommended for the crimping the sleeves provided in the kit.

The operating instructions for this kit are described in this document (see **88A, Wiring, Wiring repair kit: Use**).

● **Heat gun (77 11 230 415).**

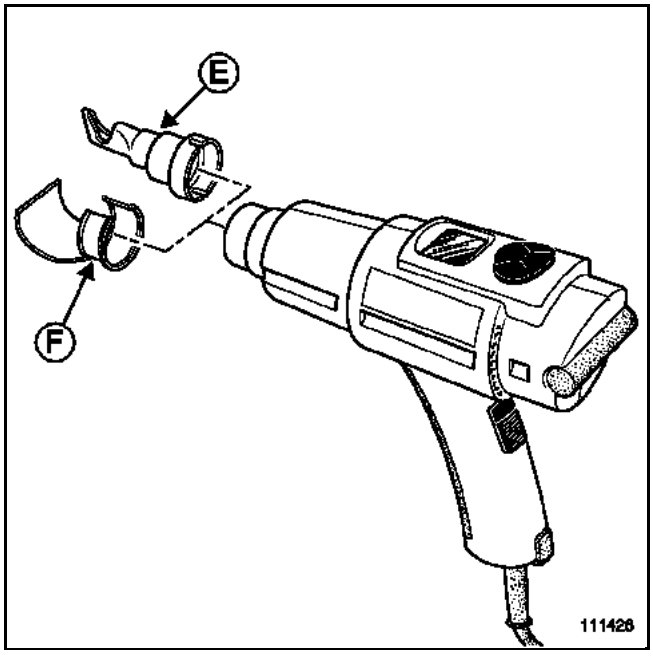

The heat gun is a hot air blower with 2 nozzles which enable it to be adapted for different needs:
- Concentrator nozzle **(E), (77 11 237 778)**.
- Heat shield nozzle **(F), (77 11 237 777)**.

It can be used to solder all self-solder sleeves and to contract the heat-shrinkable parts and sheaths on all sleeves.
Its temperature and flow of air are adjustable and are indicated on the screen.
Temperature adjustment from **80°C** to **650°C** by increments of **5°C**.
Air flow adjustment from **200 l/min** to **550 l/min** at 5 levels displayed on the screen.

The operating instructions for this kit are described in this document (see **88A, Wiring, Wiring repair kit: Use**).

3 - Consumables.

● **Self-soldering sleeves.**

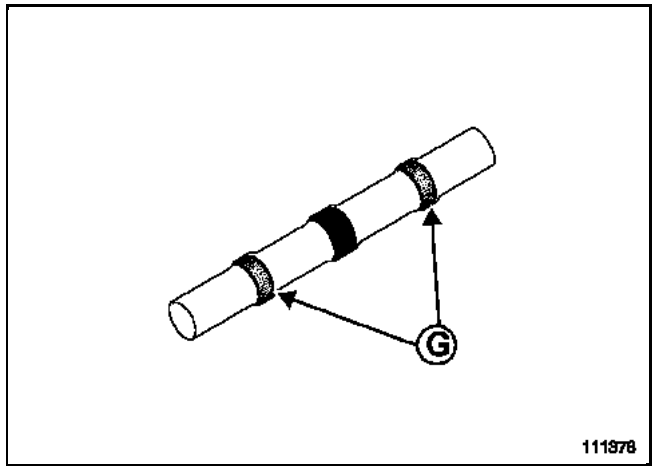

There are three sizes of heat shrinkable self-solder sleeve differentiated by the colour of their rings (**G**):

- **Clear**, for a copper cross-section (sum of 2 wires) between **0.3** and **0.8 mm^2** in total.

- **Red**, for a copper cross-section (sum of 2 wires) between **0.8** and **2.0 mm^2** in total.

- **Blue**, for a copper cross-section (sum of 2 wires) between **2.0** and **4.0 mm^2** in total.

These are sealing sleeves. The seal is formed by the rings which tighten around the wire when heated.

These sleeves are only to be used for connecting one wire with another wire (1-to-1).

● **Crimping sleeve.**

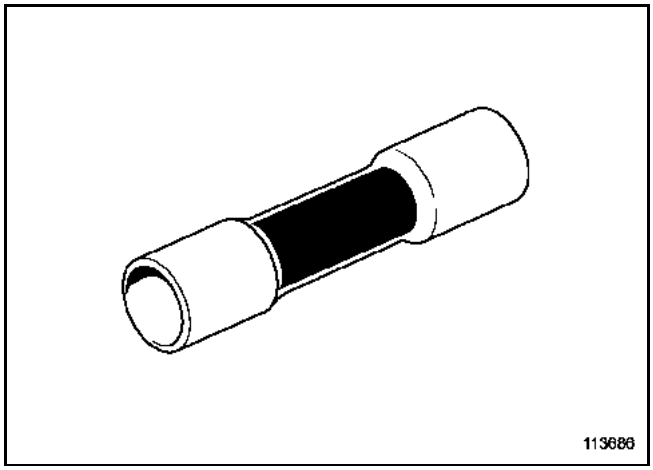

There are three sizes of heat shrinkable crimp sleeve differentiated by the colour of their rings:

– **Red**, for a copper cross-section between **0.5** and **1.5 mm²**.

– **Blue**, for a copper cross-section between **1.5** and **2.5 mm²**.

– **Yellow**, for a copper cross-section between **3.0** and **6.0 mm²**.

These are sealing sleeves. The seal is formed by the inner wall which becomes adhesive when heated.

These sleeves can be used to join one wire with another wire (1-to-1) or two wires with another wire (2-to-1).

In the case where two wires are joined to one wire (2-to-1), the seal is no longer guaranteed. Do not use when a seal is required.

● **Heat shield.**

The heat shield screen is a **250 mm** by **250 mm** square. It is intended to protect the surrounding area from the flow of hot air from the heat gun.

● **Adhesive PVC tape.**

Use the adhesive PVC tape for taping the wires. Do not use it to protect or insulate electrical parts.
It is a contact-adhesive high temperature tape.

● **Coil of twisted wires.**

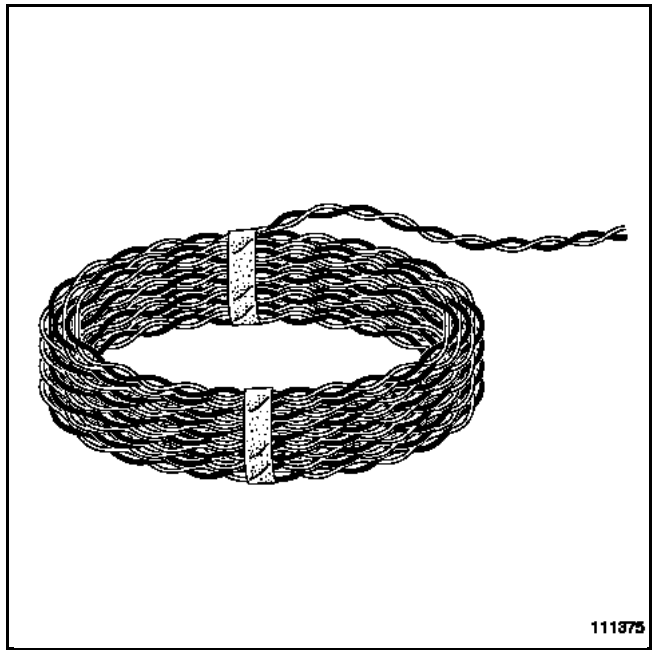

This is a coil of a twisted pair of wires (40 turns/ linear m). Ensure these wires remain twisted.
The 2 wires have a **0.5 mm²** cross-section and are of temperature class T3. It is possible to fit them in all areas of the vehicle during repairs to twisted wires of the same cross-section.

Note:
This section is an abridged version of the instructions for use of the tools in the kit.

1 - Stripping pliers.

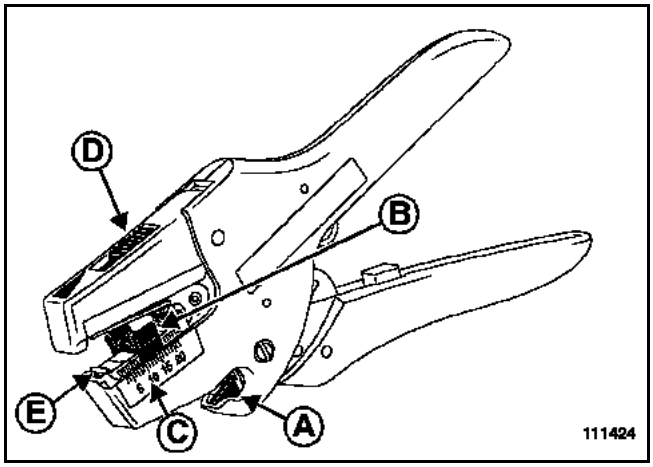

● **Description of the stripping pliers:**

(**A**) = Wire cutter.
(**B**) = Stop for adjusting the length to be stripped.
(**C**) = Scale (millimetre divisions).
(**D**) = Pressure adjustment.
(**E**) = Stripping jaws and cutting edges.

● **Cutting a wire:**

To cut electrical wires up to **6 mm^2**, insert the wire into slot (**A**) and press the handle.

● **Stripping a wire:**

This pair of stripping pliers is automatic. It does not need adjusting to the cross-section of wire to be stripped (**6 mm^2** maximum).

To strip a wire, adjust the length to be stripped by moving the stop (**B**). Press lightly on the ends to make it slide. The length to be stripped is read on the scale (**C**) in millimetres (mm).

Adjust the stripping pressure by moving the cursor (**D**). Press on the cursor to make it slide. The further forward the cursor is, the greater the force.

NOTE
If the pressure is too weak, the cutting edges will not grip the wire's insulation. If the pressure is too strong, the cutting edges can cut through the copper strands. Start with a medium setting and then adjust according to results.

Place the end of the wire against the stop (**B**) and bring it out through the jaws (**E**).

Press the handle. The jaws will grip the wire. The cutting edges will automatically adjust their position in relation to the section of wire and strip it.

NOTE
Check the quality of the stripped wire (insulation cleanly removed and no cut copper strands). Start again if necessary.

2 - Crimping pliers.

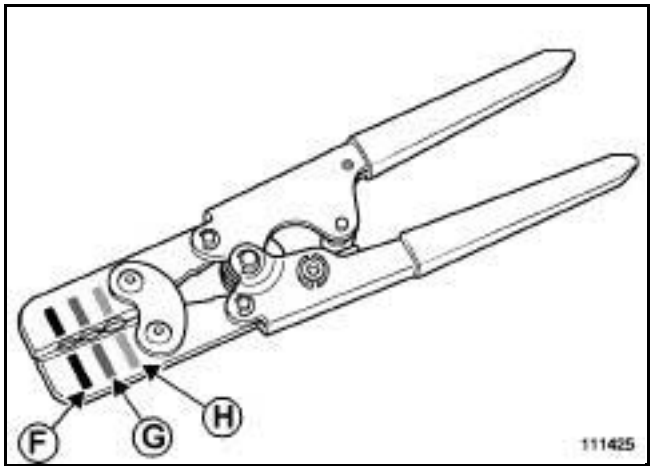

The crimping pliers are the only pliers recommended for crimping the crimp sleeves in the kit.

They are used on the 3 sizes of crimp sleeve:
- At (**F**) for crimping the **red** crimp sleeve.
- At (**G**) for crimping the **blue** crimp sleeve.
- At (**H**) for crimping the **yellow** crimp sleeve.

Before crimping a sleeve:
- choose the sleeve appropriate to the cross-section of the wire (see **88A, Wiring, Wiring: Repair**),
- strip the recommended length of wire.

● **Crimping operation:**

Squeeze the handles fully together to unlock the pliers and open the jaws.

On the pliers, find the crimping jaws which correspond to the sleeve being used.

Insert the wire(s) into one end of the sleeve.

Position the pliers' jaws in the middle of the half of the metal shaft where the wire(s) are.

Squeeze the handles fully together to crimp the sleeve onto the wire(s). Crimping is complete once the pliers are opened again.

Check that the copper of the wire is correctly crimped and that the plastic part of the sleeve has not been cut.

Repeat the crimping operation on the other end of the sleeve.

Note:
If the wire is not correctly crimped, cut the wire at the sleeve and start the operation again with a new sleeve.

3 - Heat gun.

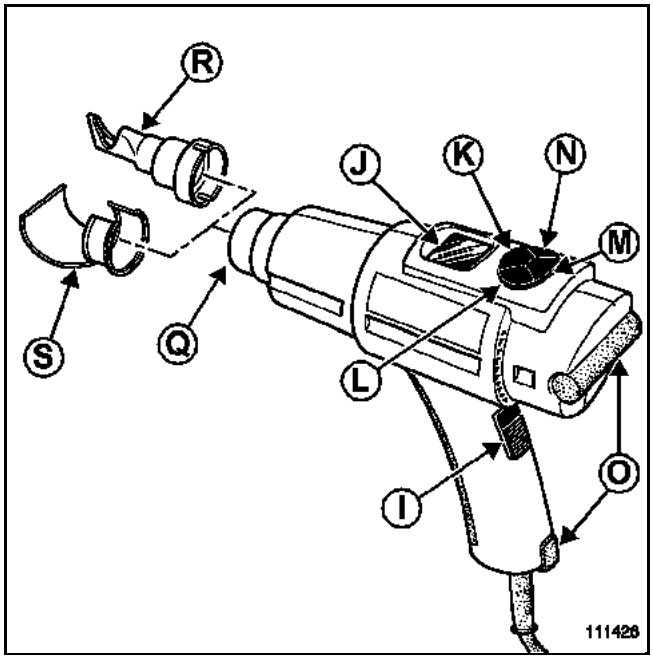

IMPORTANT
Before using the gun, the user must familiarise themselves with the safety advice in the user's manual provided by the manufacturer.

● **Introduction to the gun:**

The heat gun is recommended for contracting heat shrinkable sleeves.
For other applications, the user must take the precautions and advice in the user's manual into account.

● **Description of the heat gun:**

(**I**) = On (1)/off (0) switch.
(**J**) = Display screen.
(**K**) = SELECT MENU button.
(**L**) = + button for setting parameters.
(**M**) = STANDBY button (pause/cooling).
(**N**) = - button for setting parameters.
(**O**) = Supports for resting the tool on a bench.
(**P**) = Tool air inlet.
(**Q**) = Tool air outlet.

● **Accessories:**

(**R**) = Concentrator nozzle.
(**S**) = Heat shield nozzle.

Note:
The concentrator nozzle (**R**) is recommended when using the heat gun on the crimping or self-solder sleeves in the kit.

NOTE
The heat shield nozzle (S) can be used for contracting single heat shrinkable sheaths.
Do not use it for contracting the crimping or self-solder sleeves in the kit.

● **General information on the setting parameters:**

When contracting the sleeves in the kit, use the FREE program and change the settings as recommended.
A memory function recalls the program and settings from the last time the gun was used.

● **Switching on the gun:**

Connect the appliance to the mains electricity supply (**230 Vac** - **50 Hz** or **60 Hz**), respecting all precautions. Push the switch (**I**) on (1).
The appliance will switch on at the programs and settings most recently used.

IMPORTANT
The gun starts heating immediately.

IMPORTANT
Before putting the gun away in its case or anywhere else, leave it to cool down to ambient temperature.

● **Operating instructions:**

The heat gun is used in two ways. It can either be held in the hand and used directly. Or it can be set down on its supports (**O**) on a clean and tidy bench. The latter has the advantage of leaving the user with both hands free.

● **Programs:**

Always work with the FREE program shown on the screen (**J**) at (**T**). If it is not shown, perform the following operation:

- press menu selection button (**K**) once,
- program field (**T**) on the display screen (**J**) flashes,
- select the free program using the + (**L**) or - (**N**) buttons,
- press the menu selection button (**K**) once, so that field (**T**) on the display screen (**J**) stops flashing.

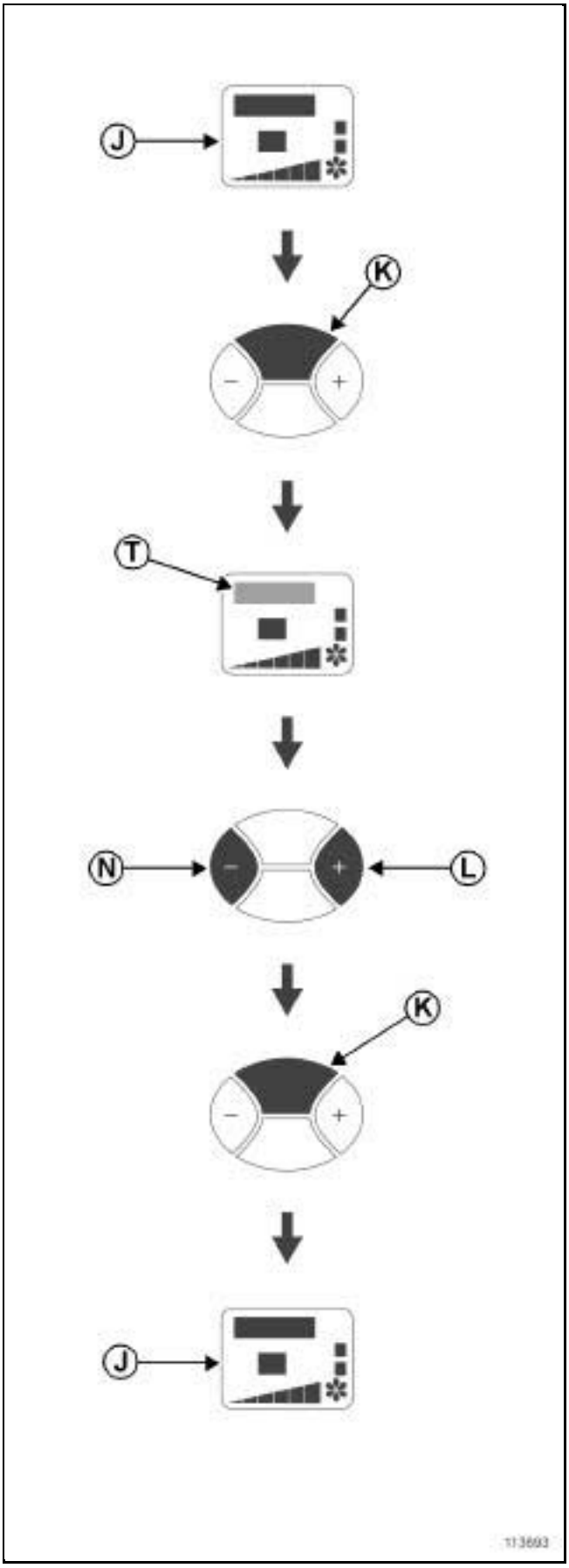

● **Temperature and air flow settings:**

To change the program settings (the FREE program is recommended), carry out the following operation:

- press the menu selection button (**K**) twice,
- the temperature field (**U**) on the display screen (**J**) flashes,
- adjust the temperature using the + (**L**) or - (**N**) buttons,
- press the menu selection button (**K**) once,
- the air flow field (**V**) on the display screen (**J**) flashes,
- adjust the air flow using the + (**L**) or - (**N**) buttons,
- press the menu selection button (**K**) once, so that the fields on the display screen (**J**) stop flashing.

Note:
When using the heat gun on crimping or self-solder sleeves, the air flow is always on the maximum setting, only the temperature varies.

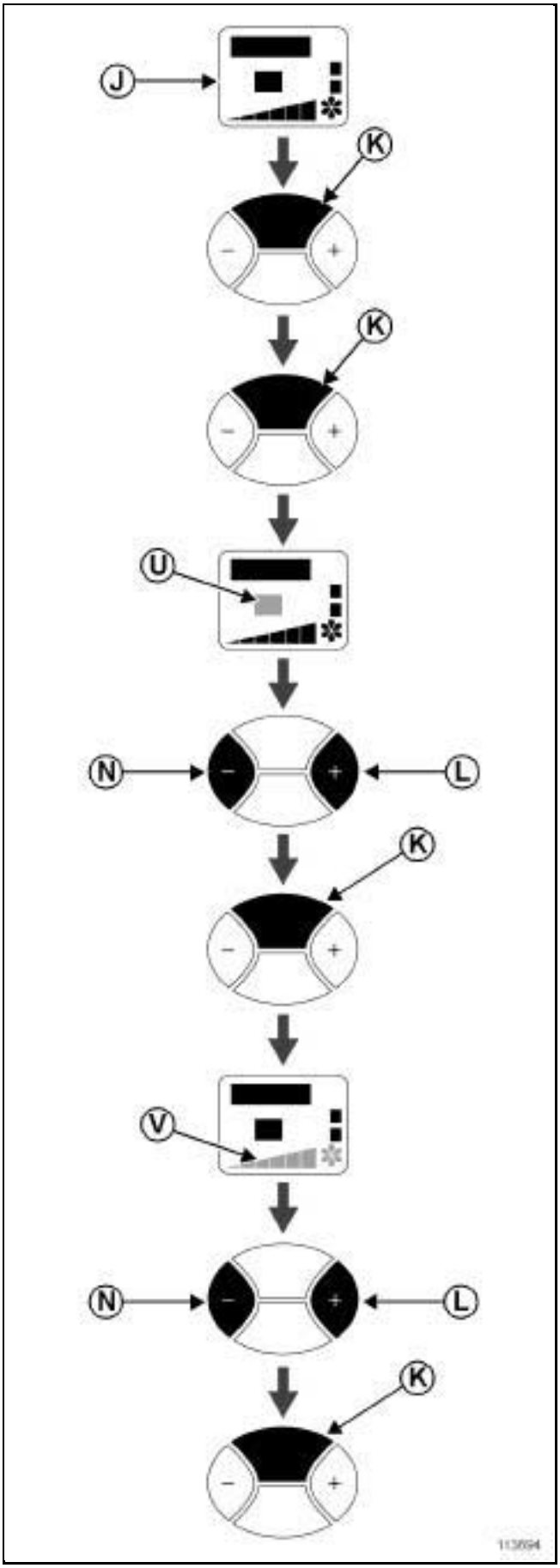

● **Special modes (COOL/PAUSE):**

After use and before setting switch (**A**) to OFF (0), cool the gun. Similarly, during brief pauses or for lower power consumption, switch the gun to PAUSE mode by carrying out the following operation.

Before switching off the heat gun:

- press the STANDBY button (**M**) once,
- the program field (**T**) on the display screen (**J**) shows COOL,
- wait until the temperature goes down to **150°C** and set switch (**A**) to OFF (0).

To switch to economy mode:

- press the STANDBY button (**M**) once,
- the program field (**T**) on the display screen (**J**) shows COOL,
- press the STANDBY button (**M**) once,
- the program field (**T**) on the display screen (**J**) shows WAIT,
- the gun is in economy mode,
- press the STANDBY button (**M**) once to recover the previous settings and start heating again.

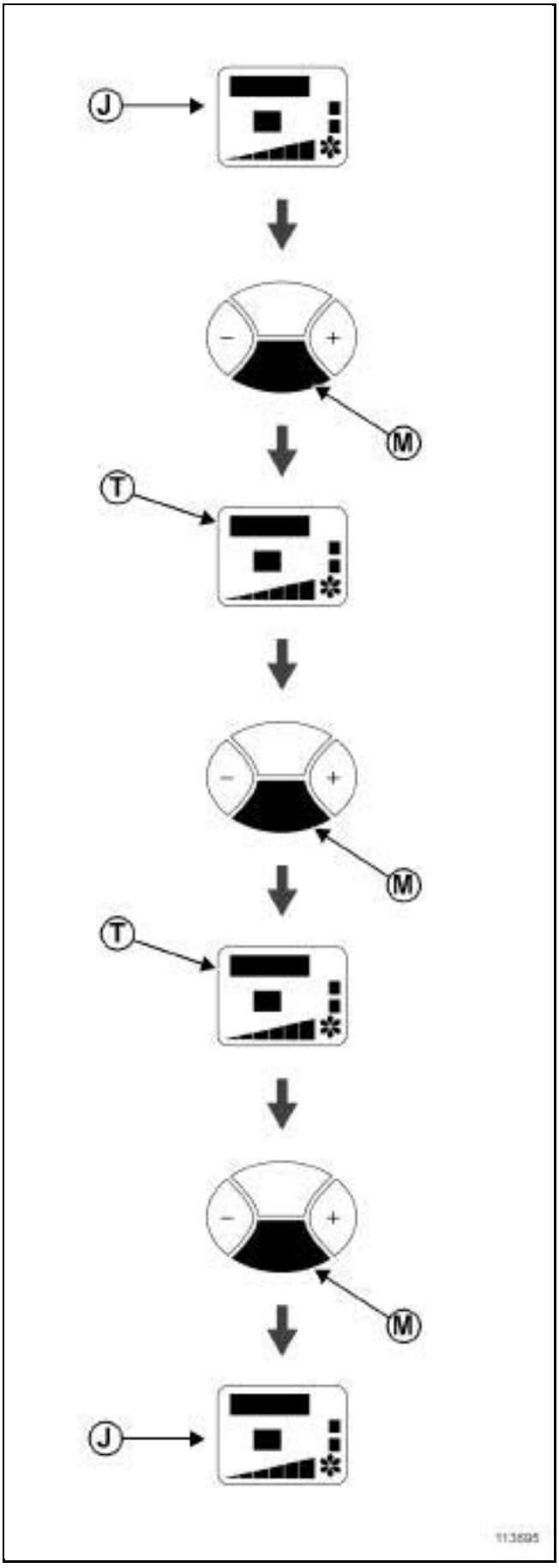

Note:
This relates to **the generic repair procedure**.

1 - Choosing the sleeve.

The are two possible techniques available:
- self-solder sleeves,
- crimp sleeves.

For each technique there are 3 sizes of sleeve.

The choice of sleeve depends on the following criteria:

● **Type of operation.**

Note:
This is **stage 1** when using the label.

If wire to wire (1-to-1), use crimp sleeves or self-solder sleeves.

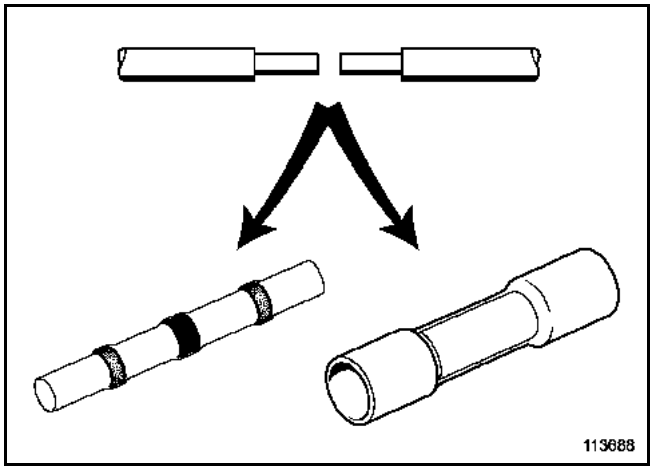

If 2 wires and 1 wire (2-to-1), **only** use crimp sleeves. In this case, the seal can no longer be guaranteed. Do not use this solution when a tight seal is needed (engine and underbody areas and damp areas of the doors and boot).

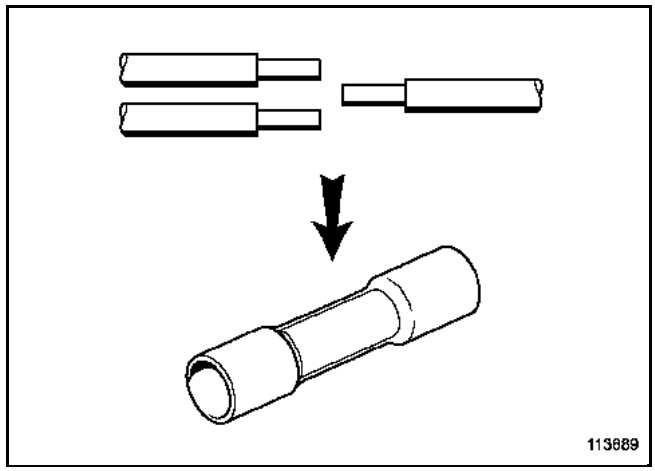

● **Wire cross-sections.**

Note:
This is **stage 2** when using the label.

See the sleeve choice table taken from the label.

Note:
The columns corresponding to the wire cross-sections give a representative overview of the different cases.

Identify the cross-section of the wire which is the subject of the operation. Use the diagram showing pictures of wires which correspond to the wire cross-sections.

Check that the diagram is at scale 1.

Find the section of the stripped wire.

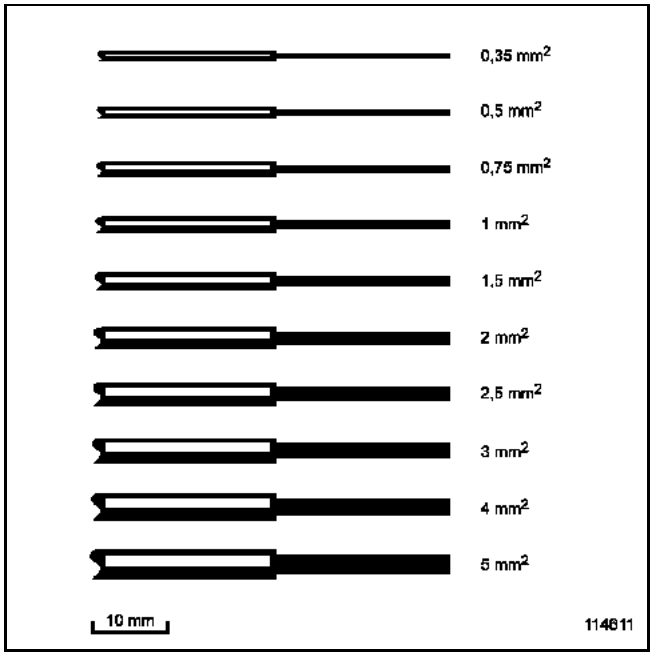

Refer to the columns of wire cross-sections to find its case.

> Note:
> If the case in question is not present, refer to the special cases.

Example 1.
Joining 2 wires, each **2 mm²**, together (1-to-1 type operation). Look at the upper section of the columns (1-to-1).
Each wire (A and C) has a **2 mm²** section. Refer to the line where:
- column A shows **1 x 2 mm²**,
- and column C shows **1 x 2 mm²**.

Example 2.
Joining 3 wires together (2-to-1 type operation). Look at the lower section of the columns (2-to-1).
On one side the 2 wires (A and B) both have a **1 mm²** section. On the other side wire C has a **2 mm²** section.
Refer to the line where:
- column A & B show **2 x 1 mm²**,
- and column C shows **1 x 2 mm²**.

● **Identifying the settings.**

> Note:
> This is **stage 3** when using the label.

After having found the case in question, follow the corresponding line to find the setting parameters.
The settings correspond to the lengths to be stripped and the temperature of the heat gun.

The column corresponding to these parameters gives the recommended sleeve.

> Note:
> If several sleeves are possible for the same operation, choose the one best suited for the number of wires to be repaired, the wiring layout and the vehicle layout (thickness of the harness, available room etc).

As relates to the previous examples.

Example 1.
2 possible sleeves:
- Either the blue self-solder sleeve.
- Or the red crimp sleeve.

Example 2.
- Only the blue crimp sleeve is possible.

● **Special cases**

If the case in question is not shown in the selection table, apply the following rules to select a sleeve.

In all cases, identify the cross-section of each wire (copper strands).

- **Case of a wire joint between 1 wire and 1 wire (most common situation).**

Conditions for self-solder sleeves:

Add together the 2 wire cross-sections (copper strands):

If **0.3 mm^2** ≤ (section 1 + section 2) ≤ **0.8 mm^2**, use the self-solder sleeve with **clear rings**.
Strip **10 mm** from each wire.
The temperature setting is **300°C**.

If **0.8 mm^2** ≤ (section 1 + section 2) ≤ **2 mm^2**, use the self-solder sleeve with **red rings**.
Strip **12 mm** from each wire.
The temperature setting is **340°C**.

If **2 mm^2** ≤ (section 1 + section 2) ≤ **4 mm^2**, use the self-solder sleeve with **blue rings**.
Strip **15 mm** from each wire.
The temperature setting is **400°C**.

Conditions for crimp sleeves:

Consider the section of each wire separately.

If **0.5 mm^2** ≤ each section ≤ **1.5 mm^2**, use the red crimp sleeve.
Strip **7 mm** from each wire.
The temperature setting is **280°C**.

If **1.5 mm^2** ≤ each section ≤ **2.5 mm^2**, use the blue crimp sleeve.
Strip **7 mm** from each wire.
The temperature setting is **300°C**.

If **3 mm^2** ≤ each section ≤ **6 mm^2**, use the crimp sleeve.
Strip **8 mm** from each wire.
The temperature setting is **320°C**.

- **Case of a wire joint between 2 wires and 1 wire (less common situation).**

Conditions for crimp sleeves:

Add together the 2 wire cross-sections (copper strands) found on one side of the sleeve to find ***Sum side 1***.

If **0.5 mm^2** ≤ ***Sum side 1*** ≤ **1.5 mm^2**.
And if **0.5 mm^2** ≤ wire cross-section side 2 only ≤ **1.5 mm^2**, use the **red crimp sleeve**.
The temperature setting is **280°C**.

If **1.5 mm^2** ≤ ***Sum side 1*** ≤ **2.5 mm^2**.
And if **0.5 mm^2** ≤ wire cross-section side 2 only ≤ **1.5 mm^2**, use the **blue crimp sleeve**.
The temperature setting is **300°C**.

If **3 mm^2** ≤ ***Sum side 1*** ≤ **6 mm^2**.
And if **0.5 mm^2** ≤ wire cross-section side 2 only ≤ **1.5 mm^2**, use the **yellow crimp sleeve**.
The temperature setting is **320°C**.

For stripping the wires:

7 mm is stripped from the single wire (side 2) for red and blue crimp sleeves and **8 mm** for the yellow sleeve.

If the two wires (side 1) have the same cross-section, strip **10 mm** from them for red and blue crimp sleeves and **11 mm** for the yellow sleeve.

If the 2 wires (side 1) have different cross-sections, then:
For red and blue crimp sleeves, strip **10 mm** from the smaller cross-section and **7 mm** from the larger cross-section.
For the yellow sleeve, strip **11 mm** from the smaller cross-section and **8 mm** from the larger cross-section.

NOTE
If no sleeve corresponds to the case in question, the operator cannot repair the wiring. Replace the wiring harness.

● **Settings table (taken from the label).**

	Sleeves / Wire cross-sections		Self-solder						Crimp					
			clear		red		blue		red		blue		yellow	
			$0.3^2 \leq A+C \leq 0.8^2$		$0.8^2 \leq A+C \leq 2^2$		$2^2 \leq A+C \leq 4^2$		$0.5^2 \leq A+B \leq 1.5^2$ & $0.5^2 \leq C \leq 1.5^2$		$1.5^2 \leq A+B \leq 2.5^2$ & $1.5^2 \leq C \leq 2.5^2$		$3^2 \leq A+B \leq 6^2$ & $3^2 \leq C \leq 6^2$	
	A	C	A, C L (mm)	T (°C)	A, C L (mm)	T (°C)	A, C L (mm)	T (°C)	A, C L (mm)	T (°C)	A, C L (mm)	T (°C)	A, C L (mm)	T (°C)
1→ 1	1x0.35 mm^2	1x0.35 mm^2	10, 10	300										
	1x0.35 mm^2	1x0.5 mm^2	10, 10	300	12, 12	340								
	1x0.5 mm^2	1x0.5 mm^2			12, 12	340			7, 7	280				
	1x0.5 mm^2	1x1 mm^2			12, 12	340			7, 7	280				
	1x0.75 mm^2	1x0.75 mm^2			12, 12	340			7, 7	280				
	1x0.75 mm^2	1x1 mm^2			12, 12	340			7, 7	280				
	1x1 mm^2	1x1 mm^2			12, 12	340	15, 15	400	7, 7	280				
	1x1 mm^2	1x1.5 mm^2					15, 15	400	7, 7	280				
	1x1.5 mm^2	1x1.5 mm^2					15, 15	400	7, 7	280	7, 7	300		
	1x1.5 mm^2	1x2 mm^2					15, 15	400			7, 7	300		
	1x2 mm^2	1x2 mm^2					15, 15	400			7, 7	300		
	1x2 mm^2	1x2.5 mm^2									7, 7	300		
	1x2.5 mm^2	1x2.5 mm^2									7, 7	300		
	1x3 mm^2	1x3 mm^2											8, 8	320
	1x3 mm^2	1x4 mm^2											8, 8	320
	1x6 mm^2	1x6 mm^2											8, 8	320

	A & B	C	A, B, C L (mm)	T (°C)	A, B, C L (mm)	T (°C)	A, B, C L (mm)	T (°C)	A, B, C L (mm)	T (°C)	A, B, C L (mm)	T (°C)	A, B, C L (mm)	T (°C)
2→ 1	2x0.5 mm^2	1x1 mm^2							10, 10, 7	300				
	1x0.5 mm^2 + 1x1 mm^2	1x1.5 mm^2							10, 7, 7	300	10, 7, 7	300		
	2x1 mm^2	1x2 mm^2									10, 10, 7	300		
	1x0.5 mm^2 + 1x1.5 mm^2	1x2 mm^2									10, 7, 7	300		
	1x0.5 mm^2 + 1x3 mm^2	1x3 mm^2											11, 8, 8	320
	2x2 mm^2	1x6 mm^2											11, 11, 8	320
Stripping/Temperature			mm	°C	mm	°C	mm	°C	mm	°C	mm	°C	mm	°C

In the case of a 1-to-1 type operation, wires **A** and **C** denote the wires which are found at either side of the sleeve.

In the case of a 2-to-1 type operation, wires A and **B** denote the 2 wires which are found at the same side of the sleeve. **C** denotes the single wire on the other side.

2 - Preparation.

To start the preparatory stage, check that the wiring is sufficiently accessible and that the sleeves have been chosen.

– Detach the wires from the wiring.

– Check that the operating area is sufficiently spacious and that the sleeves can be fitted staggered (if there are several wires).

– Mark the wires to be cut, particularly if there are several wires the same colour.

– Cut the damaged wire(s). Stagger the cuts if a lot of wires are marked so that the sleeves are not all on top of each other. The cut must be made at a distance of no less than **50 mm** from the damaged section and in an area where the sleeve will remain straight.

– Cut the replacement wire to length(s) identical to those removed from the harness. If the self-solder sleeves are being used, add **30 mm** for the wire joints.

IMPORTANT
The cross-section of replacement wire must not be less than the original cross-section of wire.

IMPORTANT
Use a 0.5 mm^2 wire to repair a 0.35 mm^2 wire.

IMPORTANT
The temperature class of the replacement wire must be equal to or greater than class T3. For the repair, use the wires recommended by the Parts Department, checking that they are suitable for your requirements.

– Strip the ends by the lengths indicated in relation to the sleeve chosen, using the stripping pliers (see **88A, Wiring, Wiring repair kit: Use**).

– Protect sensitive areas close to the wiring with the heat shield.

3 - Self-solder sleeves.

Note:
Fit the self-solder sleeves (connection and heating) line by line, sleeve by sleeve.

● **Connection.**

The equipment necessary and the wires are ready for the operation:

– Slip the self-solder sleeve onto one of the wires.

– Connect the wires by twisting the stripped sections around each other.

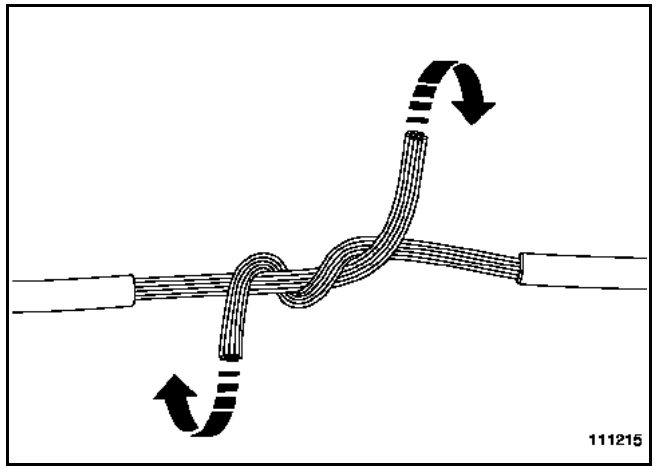

– Slide the sleeve over the stripped section. The ring of solder should end up in the centre of the stripped and twisted wires (**A**). The stripped and twisted section of the wires must be located between the 2 sealing rings (**B**).

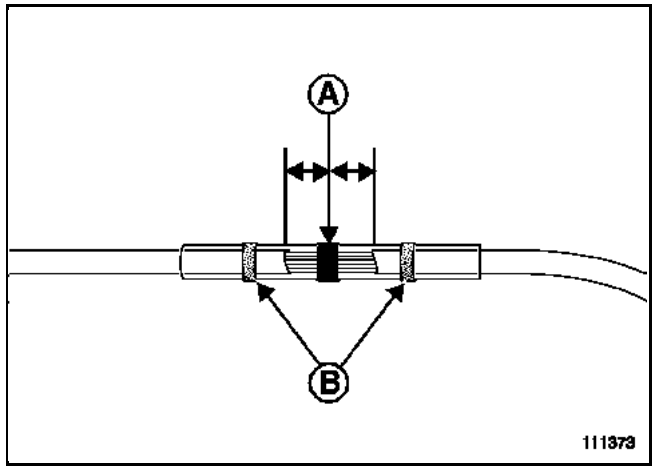

IMPORTANT
When the sleeve is positioned, check that all the copper strands remain flat and subsequently are not at risk of perforating the sleeve. Start the operation to join the wires again if necessary.

NOTE
The sealing rings must be clearly located on the insulated section of the wires (B) and not on the copper or where the copper and the insulated section meet. Start the operation to join the wires again if necessary.

Once the wires are joined, start the heating operation.

- **Heating the self-solder sleeve.**

  – Switch on the heat gun fitted with the concentrator nozzle after familiarising yourself with the precautions for use (see **88A, Wiring, Wiring repair kit: Use**).

  – Adjust the temperature and the air flow to the values indicated (see **88A, Wiring, Wiring repair kit: Use**).

  – Check that the sensitive areas close to the sleeve and the other electrical wires are not at risk of damage.

  – Heat the sleeve starting at the centre, concentrating the heat on the ring of solder and the stripped section of the wires.

  – When the copper and the ring of solder become hot enough, the ring of solder melts and runs in between the copper strands (**C**).

  – When the solder has completely melted, move the nozzle to the ends of the sleeve to finish shrinking the sheath.

  – The sealing rings of the sleeve tighten around the insulation of the wires (**D**).

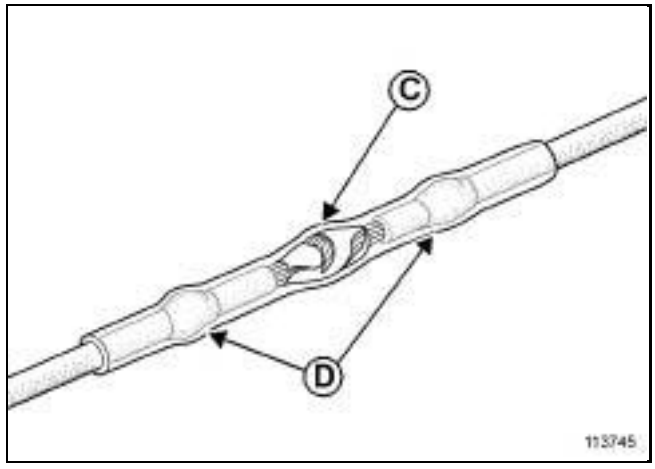

Note:
Spend the majority of the recommended time on the ring of solder and the rest of the time on the ends of the sleeve.
The heating operation takes **30 s ± 10**. This time is a guide only. It can be reduced or increased depending on how efficient the heating is.

IMPORTANT
Do not try to heat the sheath too quickly, use a backwards and forwards motion to ensure it does not burn.
Do not direct the flow of hot air onto the insulation of the wires so as not to burn it.

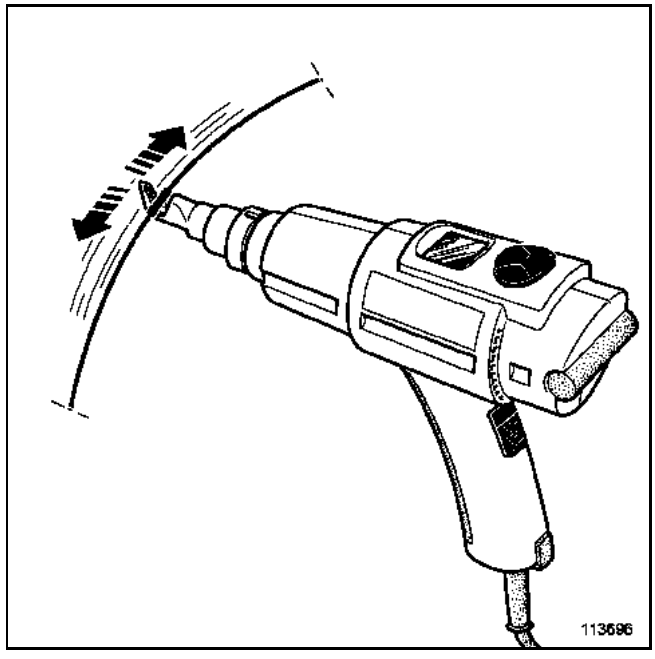

IMPORTANT
Wait for the sleeve to cool before manipulating it to maintain the quality of the solder (minimum waiting period: 1 minute).
Do not bend the sleeve (even when cool) so as to not damage the quality of the solder or the sealing properties of the sleeve.

Note:
– Do not move during installation.
– Do not overheat the sleeve.
– Do not move the sleeve or wires until they have cooled.

If several self-solder sleeves must be positioned, repeat the operation sleeve by sleeve.

When the heating operations have finished, move on to the checking operation (see **88A, Wiring, Wiring: Check**).

4 - Crimp sleeves.

Note:
For a wire-to-wire join, go straight to the crimping operation.

● **Special notes for joining 2 wires to 1 wire.**

IMPORTANT
Do not use if a tight seal is needed (engine and underbody areas and damp areas of the doors and boot).

When joining 2 wires to 1 wire, first connect the 2 wires from the same end in the following way:

– If the 2 wires have identical diameters, twist together the stripped section of the 2 wires (**E**), before putting them into the sleeve.

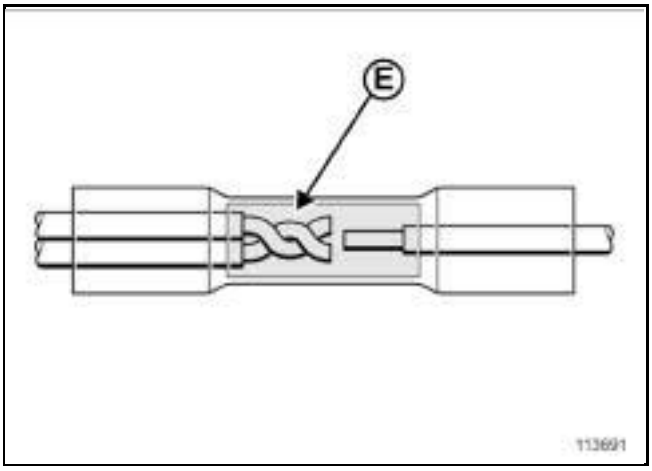

– If the 2 wires have different diameters, wind the stripped section of the smaller wire around that of the larger wire (**F**) before inserting them in the sleeve.

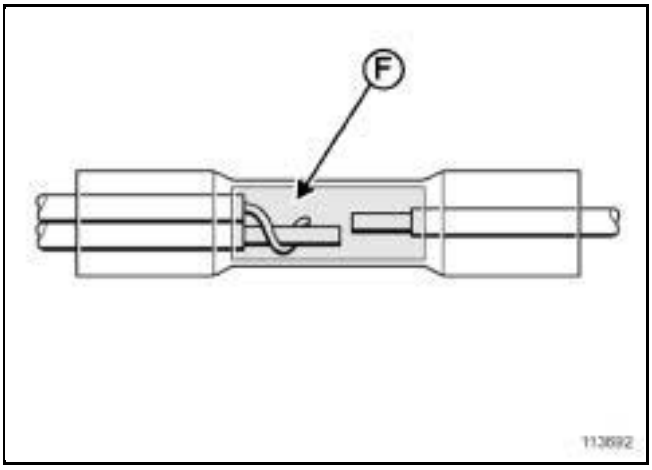

● **Crimping.**

The equipment necessary and the wires are ready for the crimping operation:

– Take the crimping pliers. Squeeze the handles fully together to unlock the pliers and open the jaws (see **88A, Wiring, Wiring repair kit: Use**).

– On the pliers, find the crimping jaws which correspond to the sleeve chosen.

– Insert the wire(s) into one end of the sleeve up to the stop located inside the metal barrel of the sleeve.

– Position the pliers' jaws around the middle of the section of the metal barrel where the wire(s) are.

– Squeeze the handles fully together to crimp the sleeve onto the wire(s). Crimping is complete once the pliers are opened again.

IMPORTANT
Check that the copper of the wire is correctly crimped and that the plastic part of the sleeve has not been cut. If the wire has been stripped by the correct length and correctly inserted in the metal barrel, then the copper of the wire should barely jut out from the shaft.

Note:
If the wire is not correctly crimped, cut the wire before the sleeve and start the operation again with a new sleeve.

Repeat the crimping operation on the other end of the sleeve to obtain the result below.

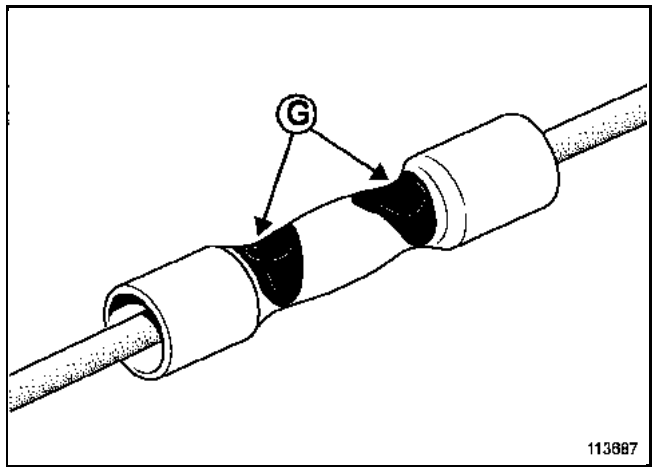

The pliers have correctly crimped each wire on the halves of the metal barrel at (**G**) without damaging the plastic.

Heating the crimp sleeve.

- Switch on the heat gun fitted with the concentrator nozzle after familiarising yourself with the precautions for use (see **88A, Wiring, Wiring repair kit: Use**).
- Set the temperature and the air flow to the values indicated, following the procedure in this note (see **88A, Wiring, Wiring repair kit: Use**).
- Check that the sensitive areas close to the sleeve and the other electrical wires are not at risk of damage.
- Heat the sleeve starting at the centre.
- When the sheath starts to contract, move the nozzle to one of the ends.
- The sheath continues to contract and produces a glue.
- When the end of the sleeve has completely contracted and the glue has correctly covered the opening of the sleeve, repeat the operation on the other end to obtain the result shown at (**H**).

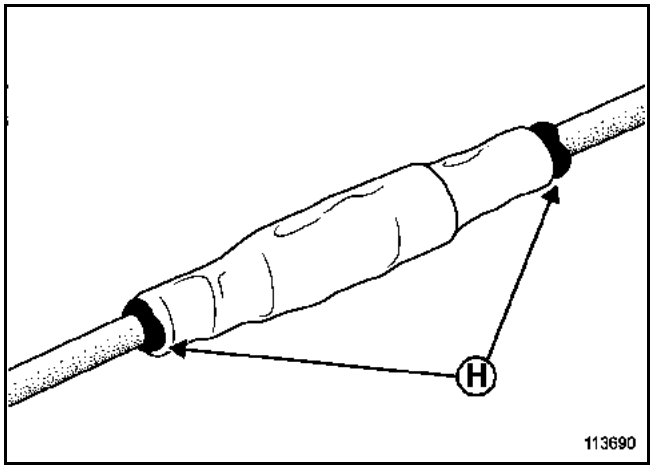

Note:
Spend the majority of the recommended time on the metal barrel and the rest of the time on the ends of the sleeve.
The heating operation takes **30 s ± 10**. This time is a guide only. It can be reduced or increased depending on how efficient the heating is.

IMPORTANT
Do not try to heat the sheath too quickly, use a backwards and forwards motion to ensure it does not burn.
Do not direct the flow of hot air onto the insulation of the wires so as not to burn it.

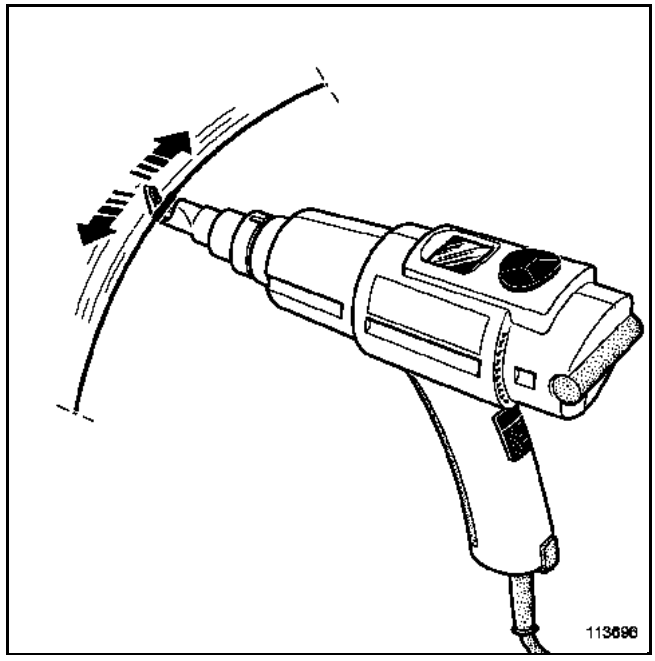

IMPORTANT
Wait for the sleeve to cool before manipulating it to ensure that the sealing properties of the sleeve are not affected (minimum waiting period: 1 minute).
Do not bend the sleeve (even when cool) so as to not damage the sealing properties of the sleeve.

When the heating operations have finished, move on to the checking operation (see **88A, Wiring, Wiring: Check**).

1 - Visual checks.

- The insulation of the wires is within the sleeve.
- (Self-solder sleeves) The sealing rings must be clearly located on the insulated section of the wires.
- (Self-solder sleeves) The solder has completely melted.
- (Crimp sleeves) The adhesive of the crimp sleeves forms a barrier at the ends of the sleeves.
- The sleeve has completely contracted around the insulation of the wires.
- The sleeve is not cut, slit, discoloured or pierced by a copper strand.
- The insulation of the wires does not show any sign of damage caused by overheating.
- The wiring and the area surrounding it have not been damaged by the heating operation.

Result of a correctly applied self-solder sleeve.

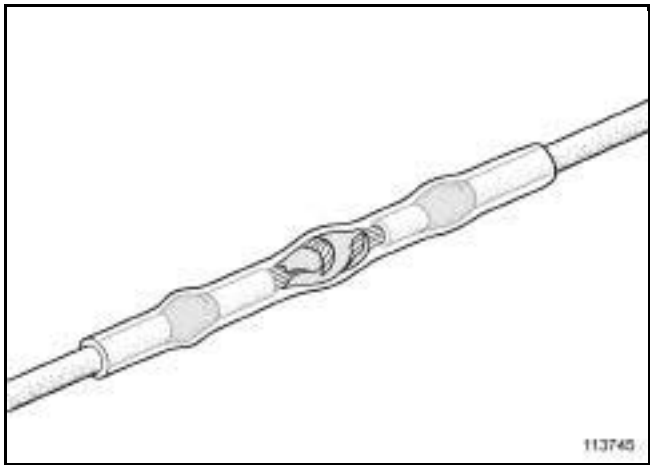

Result of a correctly applied crimp sleeve.

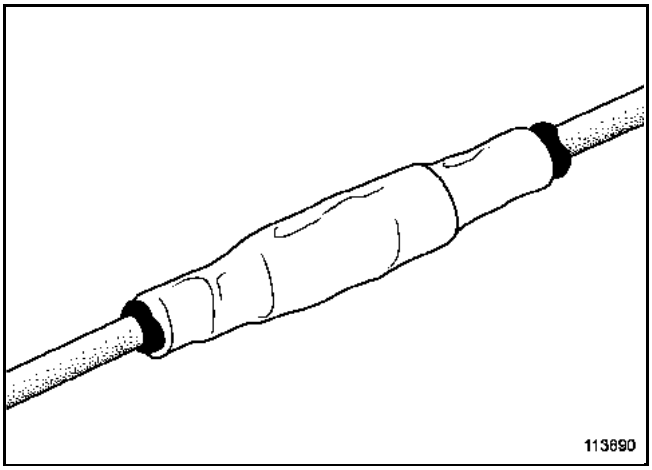

IMPORTANT
The various struck-through cases are strictly forbidden.

The self-solder sleeve has not been correctly shrunk. At (**I**), the sealing ring has not contracted around the insulation of the wire.

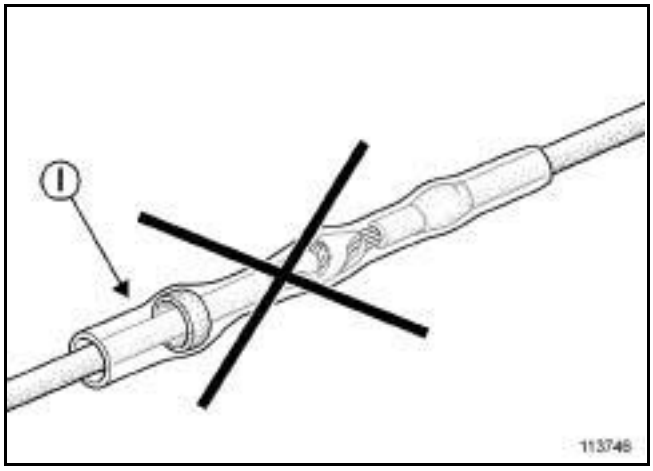

The sealing ring of the self-solder sleeve is directly on the copper of the wire at (**J**).

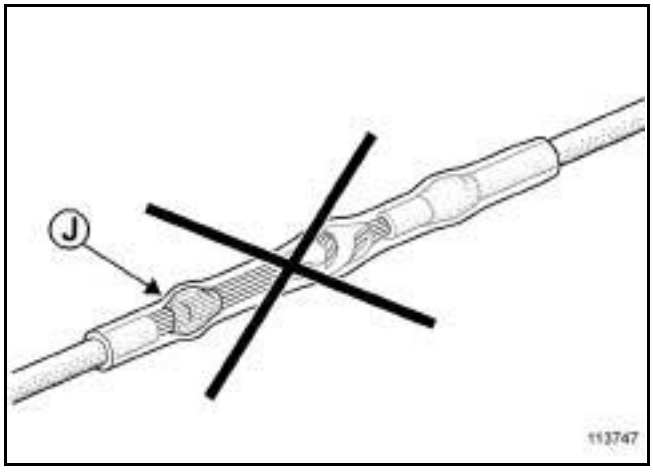

The protruding strands of the wire have pierced the self-solder sleeve at (**K**) during contraction.

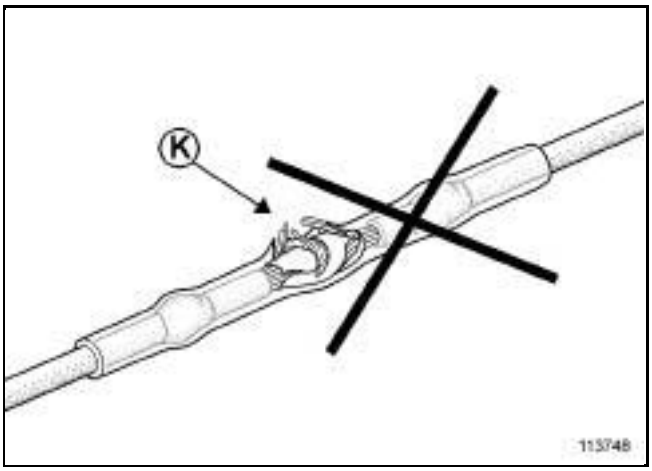

The crimp sleeve has not been correctly shrunk. At (**L**), the adhesive does not form a barrier at the end of the sleeve.

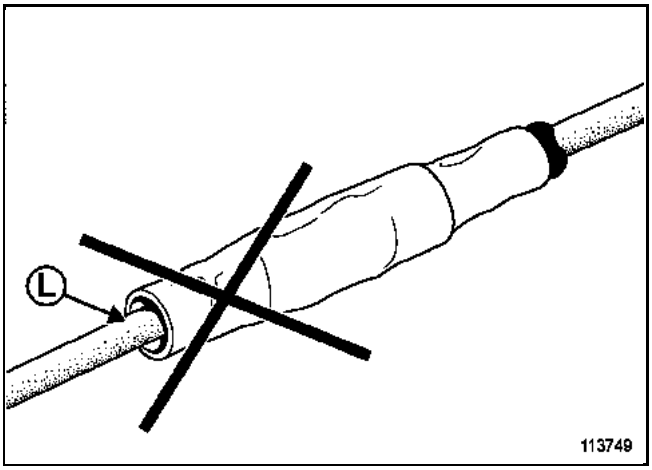

The adhesive of the crimp sleeve is directly on the copper of the wire at (**M**).

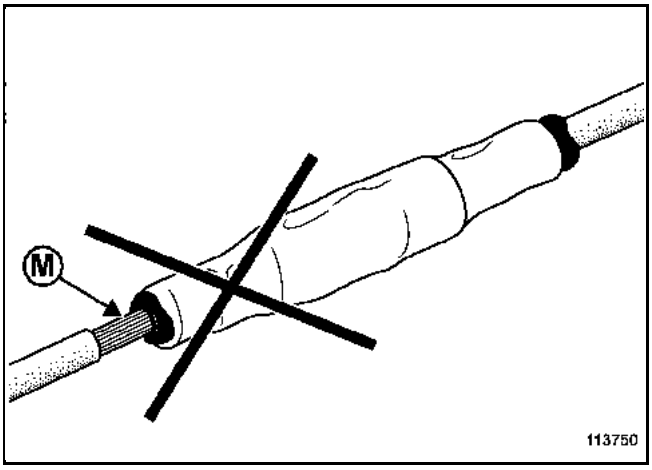

The sleeve and the insulation of the wire show signs of damage at (**N**) caused by overheating.

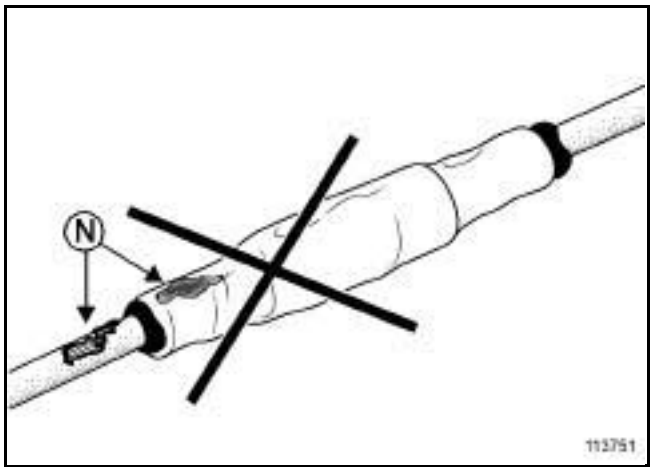

Note:
Reconnect the battery (see the **MR corresponding to the vehicle, 80A, Battery, Battery: Removal - Refitting**).

2 - Check with the diagnostic tool.

When a repaired line can be tested with the diagnostic tool, run this check.

3 - Function check.

Check that the component or the function of the repaired line is working correctly. If the case in question requires it, carry out a test drive.

Note:
Always check for faults after repair.

Refer to the fault finding procedure for the function concerned.

4 - Fitting and protection.

After the operation:

- reposition the wires concerned in the main harness,
- tape up the main harness using adhesive tape,
- protect the harness as it was originally using equivalent (noise or anti-damage) or superior protection with the protections recommended by the Parts Department.

IMPORTANT
Any repair which requires a special heat shield for the wiring are forbidden. Replace the wiring harness.

IMPORTANT
Check that the wiring is correctly secured and protected to avoid any wear by rubbing and any noise disturbance.

5 - Final check.

After any operation on a wiring harness, check that there are no faults with the diagnostic tools (Clip, EasyClip etc).

Refer to the corresponding fault finding procedure.

If a fault is present, pass on the vehicle fault finding to a qualified operator: automotive electrician, technician agent or cotech (level 2 minimum).

IMPORTANT
Apply this procedure when there is a connector-wiring kit. Unless the connector-wiring kit is linked to one of the sensitive lines listed in the specific procedures reference table (see **88A, Wiring, Wiring: Precautions for repair**). **In this case, apply the specific procedure for the sensitive line concerned.**

1 - Wiring-Connector kit.

A wiring-connector kit enables a repair to be carried out when the connector is defective or when the fault is located less than **10 cm** from the connector.

A wiring-connector kit is generally made up of:

- at least 1 connector,
- crimped wires with corresponding contacts,
- sealing components if the connector is sealed,
- the self-solder or crimp sleeves necessary for the repair,
- other components specific to the function concerned (e.g. fuses).

2 - Using a wiring-connector kit.

Except in the specific outlined cases, use the wiring-connector kits as follows:

- check that the kit is complete,
- check that the connnector configuration (position of wires in the cells of the connector) corresponds to your needs,
- check that the wire cross-sections of the wiring-connector kit are equal to or larger than the cross-section of wires to be repaired,
- mark the wires to ensure that the tracks are not reversed,

IMPORTANT
The colour of the wires cannot serve as a marker. In certain cases, wiring-connector kits can have different colours to those of the wiring to be repaired.

- cut the connector wires to be replaced to a length greater than **100 mm** and stagger the cuts,
- shorten the wiring-connector kit wires so as to obtain wires the same lengths as those cut from the wiring to be repaired. For self-solder sleeves, add **30 mm** for the wire joints,
- apply the generic repair procedure for the joint (see **88A, Wiring, Wiring: Repair**).

3 - Checking and fitting the repair with wiring-connector kits.

- Carry out the generic repair procedure check (see **88A, Wiring, Wiring: Check**) or that of the specific procedures if it is a specific case (see **88A, Wiring, Wiring: Precautions for repair**).
- Apply the recommendations from the generic repair procedure concerning the fitting and fuses (see **88A, Wiring, Wiring: Check**).

4 - Final check.

After any operation on a wiring harness, check that there are no faults with the diagnostic tools (Clip, EasyClip etc).

Refer to the corresponding fault finding procedure.

If a fault is present, pass on the vehicle fault finding to a qualified operator: automotive electrician, technician agent or cotech (level 2 minimum).

IMPORTANT
This procedure relates to the repair of the multiplex network alone (twisted wires).

1 - Locating the fault.

Use the diagnostic tool (clip) to test the multiplex network (see the fault finding procedure corresponding to the vehicle).

The diagnostic tool can detect the following short circuits on the multiplex network:

- short circuit between CAN L and **+ 12 V**,
- short circuit between CAN H and **+ 12 V**,
- short circuit between CAN H and earth,
- short circuit between CAN L and earth,
- short circuit between CAN L and CAN H,
- open circuits.

Note:
In the case of a short circuit between CAN-L and earth, communication between the various computers which make up the multiplex network is not interrupted. However, the multiplex network becomes sensitive to interference and can be the cause of an intermittent fault.

After having located the multiplex line fault, it is possible to repair it whilst applying all the necessary precautions outlined in this document.

2 - Necessary equipment.

For repairing the multiplex network, use the components of the wiring repair kit (see **88A, Wiring, Wiring repair kit: Description**).

Use the self-solder sleeves with red rings (**A**) for making the joints.

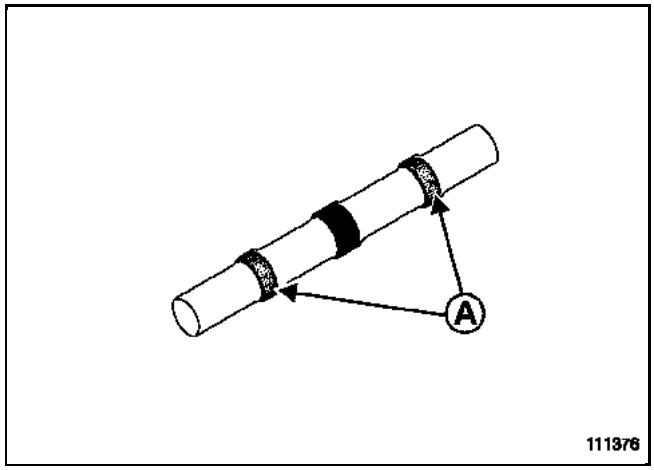

3 - Repairing the multiplex line.

IMPORTANT
Before starting to repair a multiplex line, it is necessary that you familiarise yourself with the use of the tools relating to this repair (see **88A, Wiring, Wiring repair kit: Use**).

Disconnect the battery (see the **MR corresponding to the vehicle, 80A, Battery, Battery: Removal - Refitting**).

Remove the components necessary to enable access to the wiring.

Detach the section of wire to be repaired from the main wiring.

Cut the wires at (**B**) and (**C**), **50 mm** on each side of the damage.

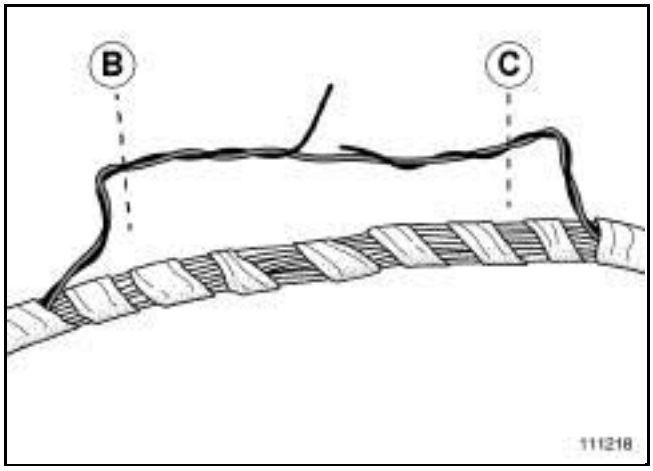

From the coil of twisted wires (**0.5 mm^2**, specific number of turns) to be used to repair the multiplexing, take a length of wire the same as that removed from the harness, **plus 30 mm** for the wire joints (see **88A, Wiring, Wiring repair kit: Description**).

IMPORTANT
Do not untwist the harness to be repaired more than 100 mm (D). The wires at (E) must be twisted uniformly along the repaired length.

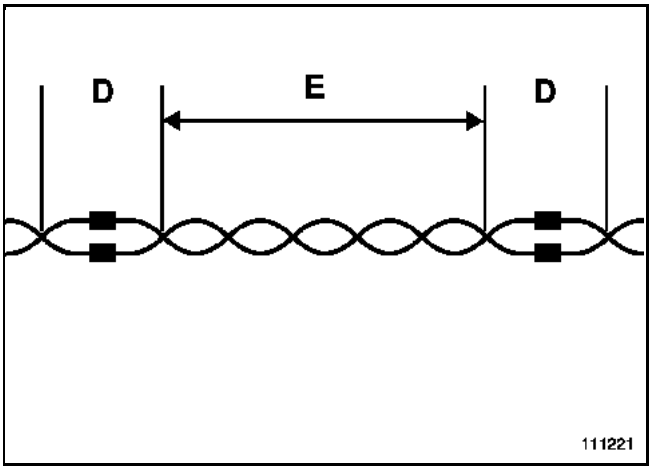

Strip each end of the wires by **10 mm (F)** at each side.

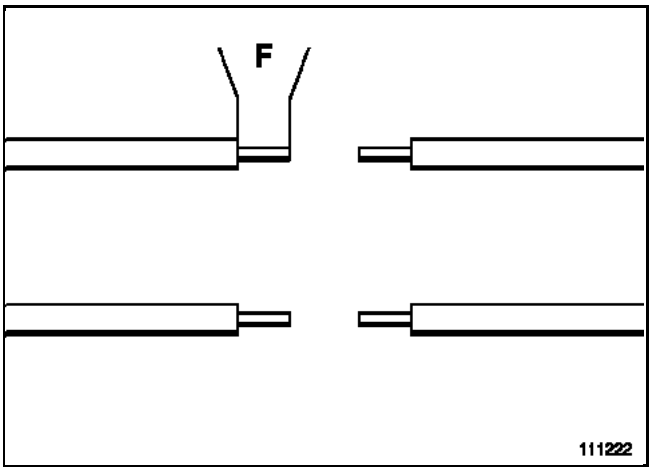

To join the wires, working wire by wire:
- slip the self-solder sleeve onto the wire,
- twist the end of the wires together.

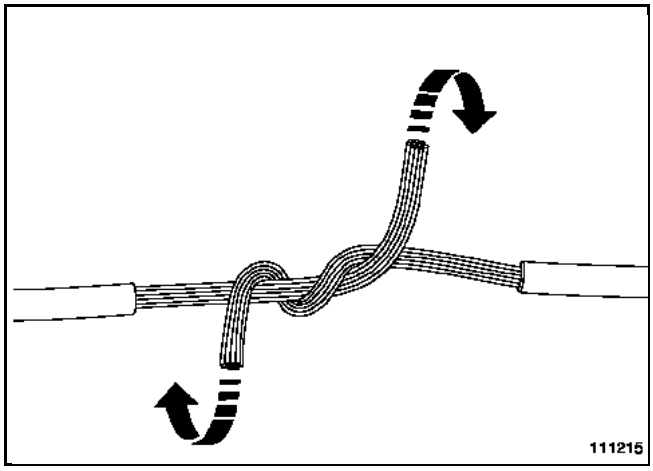

IMPORTANT
The colour of the wires (CAN H et CAN L) must be respected when they are being joined.

- Position the sleeve with its solder ring in the centre of the wire joint.

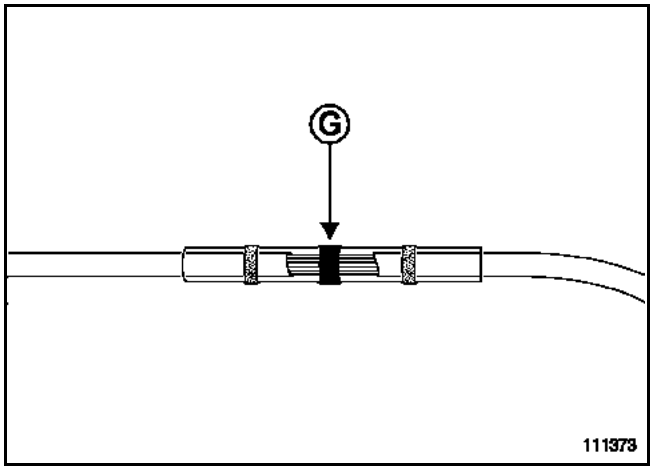

- Switch on the heat gun.
- Adjust the temperature of the gun to **340°C** with the blower speed set to maximum (see **88A, Wiring, Wiring repair kit: Use**).
- Heat the sleeve so that the solder ring melts (**G**) onto the wires until the heat shrinkable sheath contracts.

Refer to the precautions for use relating to self-solder sleeves (see **88A, Wiring, Wiring: Repair**).

IMPORTANT
Do not try to heat the sheath too quickly, use a backwards and forwards motion to ensure that it does not burn.
Do not direct the flow of hot air onto the insulation of the wires so as not to burn it.

Note:
For the soldering to be complete and for the sheath to contract, the heating operation should last about **30 s ± 10**.
Spend the majority of the recommended time on the ring of solder and the rest of the time on the ends of the sleeve.
The recommended time is given as a guide. It can be reduced or increased depending on how efficient the heating is.

NOTE
Wait for the sleeve to cool before manipulating it to maintain the quality of the solder (minimum waiting period: 1 minute).
Do not bend the sleeve (even when cool) so as to not damage the quality of the solder or the sealing properties of the sleeve.

4 - Checking the multiplex line.

IMPORTANT
After repairing the multiplex line, always check the multiplex network using the diagnostic tool.

Note:
During the check with the diagnostic tool, move the lines forwards and backwards slightly. If a fault is recorded, start the operation again for the defective line.

Refer to the fault finding procedure for the function concerned.

IMPORTANT
After checking the multiplex line:
- **refit it in the main harness,**
- **tape it up with adhesive tape.**

Apply the recommendations from the generic repair procedure concerning the fitting and fuses (see **88A, Wiring, Wiring: Check**).

IMPORTANT
The various struck-through cases are strictly forbidden.

No turns (twists) at (**H**).

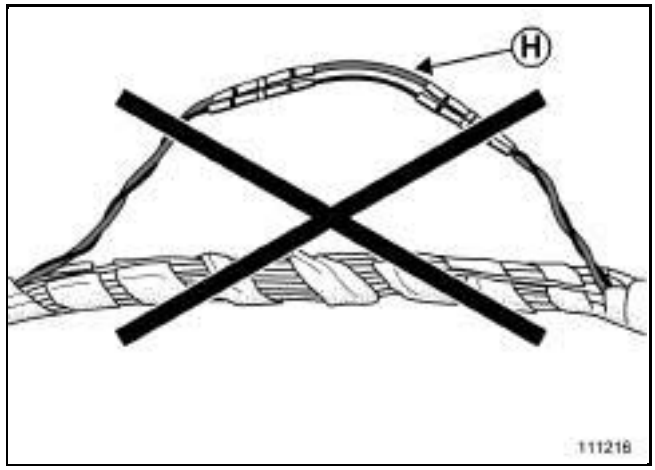

The two wires added are of a different length.

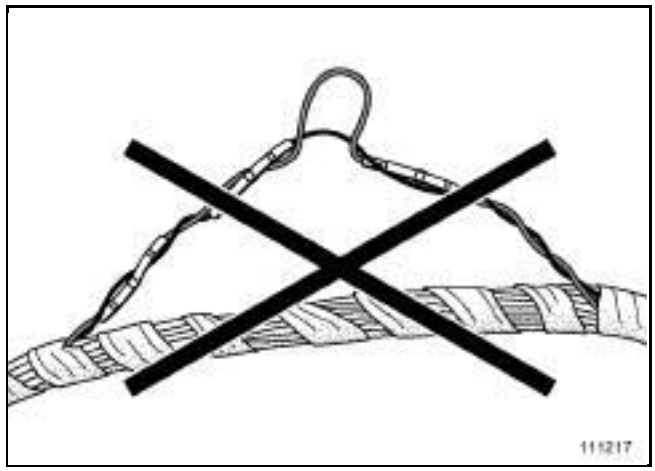

5 - Final check.

After any operation on a wiring harness, check that there are no faults with the diagnostic tools (Clip, EasyClip etc).

Refer to the corresponding fault finding procedure.

If a fault is present, pass on the vehicle fault finding to a qualified operator: automotive electrician, technician agent or cotech (level 2 minimum).

IMPORTANT
This procedure relates to the repair of airbag and pretensioner wiring only.

Note:
Apply all the precautions and recommendations shown in the MRs.

IMPORTANT
All work on airbag and pretensioner systems must be carried out by qualified trained personnel.

IMPORTANT
The pyrotechnic systems (pretensioners or airbags) must not be handled near to a heat source or flame; there is a risk that they may be triggered.

IMPORTANT
Before removing an electronic control unit (ECU) or before any operation on the safety systems or around them, the airbag computer must be locked using the diagnostic tool. When this function is activated all the trigger lines are inhibited, and the airbag warning light on the instrument panel is lit continuously.

IMPORTANT
Before any operation on a pyrotechnic component connection (connector or wiring) found defective during fault finding, disconnect the pyrotechnic component.

1 - Identify the solution.

The case in question must figure in the table below. Otherwise, replace the wiring.

Airbag and pretensioner components	Solutions
Under seat connector (Airbag warning light on)	Shunt the connector. See **Under seat connector** in this section.
Pyrotechnic component connectors (squib) (airbag triggers, pretensioner, etc.)	Replace the connector using the airbag connectors kit. See **Pyrotechnic component connectors** in this section.
Airbag computer connector	No operation. Change the wiring harness except in the following cases: ● If there is a specific procedure (OTS), along with the authorisation to apply it. ● If the connector lock is broken, lock replacement authorised.
Airbag and pretensioner harness damage	No operation except in specific conditions. See **Airbag and Pretensioner harness damage** in this section.

IMPORTANT
Any repair linked to the airbag function necessitates a specific check using the network's diagnostic tools.

2 - Under seat connector.

When fault finding identifies an under seat connector fault, shunt the under seat connector following the procedure below:

Cut the electrical wires either side of the connector.

Apply the specific procedure for repairing multiplex lines (see **88B, Multiplex, Multiplex network: Repair**), except the part on locating the fault, to shunt the connector.

> Note:
> Check that the length of replacement wire is the same as that removed from the harness, **plus 30 mm** for the wire joints.

After the operation, check that the wire is not too taut or too long when the seat is furthest forward or back.

Protect the wires so that they are not damaged and this new branch is correctly maintained. Hanging loops are not allowed, regardless of the wires involved in the repair.

Carry out the specific airbag and pretensioner line repair checks. See **Airbag line repair check** and **Final check** in this section.

> Note:
> Check that the harness is correctly repositioned after the operation and that it does not obstruct the seat adjusting mechanisms.

3 - Pyrotechnic component connectors.

These are airbag and pretensioner trigger connectors.

Identify the connector concerned on the vehicle.

Repair is possible if it is a SQUIB connector.

Find the colour of the connector: Blue, green or orange.

Find the shape of the connector: Straight or angled.

Select the same connector (colour and shape) from the airbag connectors kit (see under DIALOGYS).

Example of an angled SQUIB connector.

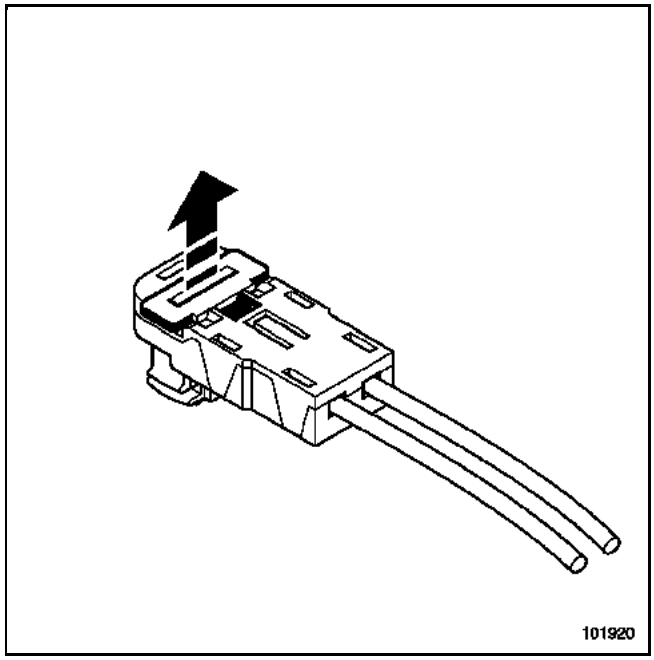

Apply the specific procedure for repairing multiplex lines (see **88B, Multiplex, Multiplex network: Repair**), except the section on locating the fault, to replace the connector.

Carry out the specific airbag and pretensioner line repair checks. See **Airbag line repair check** and **Final check** in this section.

4 - Airbag and Pretensioner harness damage.

IMPORTANT
No operation is authorised unless it is possible to check the repair using the diagnostic tool.

Where the repair can be checked with the diagnostic tool:

- if it is a case of twisted wires with a cross-section less than or equal to **0.5 mm^2**, apply the multiplex lines specific repair procedure (see **88B, Multiplex, Multiplex network: Repair**), except the section on locating the fault, for the repair of the lines;
- if it does not concern twisted wires, apply the generic procedure for repairing the harness (see **88A, Wiring, Wiring: Check**).

Carry out the specific airbag and pretensioner line repair checks. See **Airbag line repair check** and **Final check** in this section.

5 - Airbag lines repair check.

Confirm the airbag line repair to ensure that the repair is correct:

- Check the quality of the operation by measuring the impedance produced by the computer using the diagnostic tool.
- Unlock the airbag computer using the diagnostic tools.
- The warning light should no longer be on.

Note:
During the check with the diagnostic tool, move the lines forwards and backwards slightly.
The resistance measurement should remain stable, if variations in resistance are noticed, start the repair operation again for the defective line.

Refer to the airbag and pretensioner function fault finding procedure for the vehicle concerned.

Apply the recommendations from the generic repair procedure concerning the fitting and protection (see **88A, Wiring, Wiring: Check**).

6 - Final check.

After any operation on a wiring harness, check that there are no faults with the diagnostic tools (Clip, EasyClip etc).

Refer to the fault finding procedure for the airbag and pretensioner function concerned.

If a fault is present, pass on the vehicle fault finding to a qualified operator: automotive electrician, technician agent or cotech (level 2 minimum).

RENAULT

Technical Note 6018A

TTY

Maintenance

Basic manual: All MRs

Subsection concerned: 01 D

Explanations of how vehicle maintenance programme operations are carried out.

Note: this maintenance must be carried out in accordance with the Maintenance Booklet for the vehicle which takes precedence.

Edition 4

77 11 335 482 **MARCH 2005** **Edition Anglaise**

"The repair methods given by the manufacturer in this document are based on the technical specifications current when it was prepared.

The methods may be modified as a result of changes introduced by the manufacturer in the production of the various component units and accessories from which his vehicles are constructed."

All copyrights reserved by Renault.

The reproduction or translation in part of whole of the present document, as well as the use of the spare parts reference numbering system, are prohibited without the prior written consent of Renault.

© Renault s.a.s. 2005

Maintenance

Contents

Page

01D MECHANICAL INTRODUCTION

Vehicle general information:
Maintenance 01D-1

To find out the **RENAULT** service interval and additional operations, refer to the vehicle's Maintenance Booklet.

I - RENAULT SERVICE:

Inform the customer of any fault that is revealed during an inspection.

1 - Bodywork inspection:

Visually inspect the condition of the:

- vehicle,
- top of the body,
- wheel arches (if possible).

Inspect and report any damage to the undertray.

Report any dents, cracks, visible scratches and visible corrosion on the entire vehicle.

This inspection helps ensure the validity of the anticorrosion warranty after repairs (fill out the Anticorrosion Inspection sections in the Maintenance Booklet).

2 - Drain and fill the engine oil:

Replace the engine oil filter each time the oil is changed.

Wipe the drain plug with a cloth after changing the oil.

The oil must comply with the specifications of the Engine Oils Technical Note (see **TECHNICAL NOTE 6013A**).

When topping up the engine oil, it is important to:

- allow approximately ten minutes for the oil to run through before checking the level with the dipstick,
- not exceed the maximum mark on the dipstick: too much oil can damage the engine.

3 - Checking the exhaust:

Check:

- that there are no perforations or dents on the silencer, the expansion chamber and the catalytic converter,
- that the rubber mounting bushes are not torn,
- that the exhaust pipe is aligned correctly from the engine outlet to the rear end.

4 - Check the brake pads:

Remove the front and rear wheels.

Check:

- the thickness of the front and rear brake pads visually,
- for any leaks,
- the condition of the front and rear brake hoses,

Refit the front and rear wheels and tighten them to torque.

Depress the brake pedal to bring the pads and discs into contact after the pads are replaced.

Make sure that the brake wear sensors are properly connected (if fitted to the vehicle).

5 - Check the sealing on the clutch and braking circuits:

In addition to checking for leaks, when checking the brake pads, check that there are no leaks under the vehicle from the unions, the ABS unit, the brake limiter and the clutch circuit.

6 - Check the clutch clearance:

Only for **LOGAN**, check the clutch clearance.

7 - Checking the level of the brake/hydraulic clutch fluid.

Check that the brake fluid level is between the MINIMUM and MAXIMUM levels on the tank (do not add brake fluid if the brake pads are not replaced).

For vehicles fitted with ESP, **RENAULT** recommends a brake fluid with low viscosity in cold conditions (maximum **750 mm^2/s** at **40°C**).

8 - Checking the windscreen washer level:

Check the windscreen washer level.

9 - Checking the coolant level:

Check the coolant level: it should be between the MINIMUM and MAXIMUM level on the reservoir.

10 - Checking the sequential gearbox hydraulic unit level:

Check the hydraulic unit oil level: it should be between the MINIMUM and MAXIMUM level on the reservoir.

11 - Checking the fluid level and seal on the hydraulic power assisted steering:

Check the power assisted steering fluid level: it should be between the MINIMUM and MAXIMUM level on the reservoir.

12 - Checking the condition of the rubber gaiters:

Check the condition of the rubber gaiters (front axle, steering and driveshaft ball joint). There must be no cracks or tears through which water and impurities (mud) can enter and cause accelerated wear of the components.

13 - Check the condition of the tyres (including the emergency spare wheel):

Check the tyre pressures when cold using a calibrated pressure gauge.

Check the pressure of the emergency spare wheel or, if the vehicle does not have one, check the use-by date of the tyre repair aerosol.

Respect the recommended pressure found on the sticker on the door (if the vehicle does not have this sticker, refer to the Driver's Handbook).

The tyres must be in good condition (no inner or outer wear, asymmetric wear, deformation, etc.).

14 - Checking the shock absorbers:

Visually check that there is no oil seeping out from the shock absorber.

15 - Checking the bulbs:

Check that all the bulbs in the vehicle operate correctly.

16 - Checking the battery charge:

Check the battery charge using the MIDTRONICS R330 tool or a similar version (see **TECHNICAL NOTE 6002A**).

17 - Checking the condition of the windscreen and the door mirrors:

Check the windscreen and door mirrors for cracks or other damage.

18 - Checking the condition of the wiper blades:

Check that there are no cracks on the front and rear windscreen wiper blades.

19 - Checking the position of the safety stickers:

Check that vehicle has the airbag stickers (located on the sunblind and on the right-hand side of the dashboard) and engine compartment safety stickers.

Affix the maintenance sticker.

20 - Checking the tail lift (for a MASTER originally fitted with a tail lift):

The tail lift should be subject to servicing and periodic inspections.

This should be carried out in consultation with the operating instructions and the inspection manual for the equipment.

21 - Resetting the maintenance indicator:

For vehicles fitted with a maintenance indicator, reset the maintenance indicator in accordance with the vehicle repair procedures.

22 - Computer fault finding:

The purpose of this procedure is to see if any of the computers are faulty.

The following tools are essential for carrying out fault finding on these systems:

- a CLIP diagnostic tool,

- a CAN probe.

The procedure can be applied to the whole **RENAULT** range.

Running fault finding on computers highlights any malfunctions not detected by the system's self-diagnostic procedure.

> Note:
>
> Always check the condition of the battery before carrying out fault finding on the computers as insufficient voltage can affect the computers.

a - For all vehicles except MEGANE II, SCENIC II and MODUS:

Order of computer fault finding procedure:

- Switch off the ignition,

- connect the CLIP diagnostic tool to the vehicle's diagnostic socket.

- switch on the CLIP diagnostic tool'

- switch on the ignition,

- move the mouse pointer to the AUTOMATIC ACQUISITION OF VIN CODE icon and confirm (small car icon); If the acquisition fails, enter the vehicle specifications manually,

- move the mouse pointer to the AUTOMATIC TEST FOR ALL COMPUTERS icon (2nd from the top),

- move the mouse pointer to the AUTOMATIC TEST FOR ALL COMPUTERS bar in the centre of the screen and confirm,
- read the instructions on the screen, then confirm (selecting the Next Page icon),
- on the SWITCH ON IGNITION screen, switch on the ignition if it has not already been switched on, then confirm (selecting the Next Page icon): the multiplex network test then begins,
- on the CHECK THAT ENGINE IMMOBILISER IS NOT ACTIVE - SWITCH ON IGNITION screen, select NEXT and confirm (select the Next Page icon; the test starts. Wait for the test to end before carrying out a new operation,
- once the test has been completed, the screen with a table places the tested computers in the following three categories:
  - COMPUTERS WITH FAULTS,
  - COMPUTERS WITHOUT FAULTS,
  - COMPUTERS NOT RECOGNISED*

  (* Fault finding cannot be carried out on these unrecognised computers, or they are intended for options not installed on the vehicle. If the option is actually available on the vehicle, check the condition of the fuses, relays and connections to that computer)

  If your CLIP tool is connected to a printer, print the table by moving the cursor to the PRINT icon (at the bottom on the left-hand side of the screen) and attach the printout to Maintenance Booklet.
- to end the test, move the mouse pointer to the ">" icon and then confirm,
- move the mouse pointer to the EXIT icon (bottom right-hand side of the screen), then confirm,
- switch off the ignition and disconnect the diagnostic socket.

b - For MEGANE II, SCENIC II and MODUS:

Order of computer fault finding procedure:

- switch off the ignition,
- connect the CLIP diagnostic tool,
- switch on the ignition,
- move the mouse pointer to the AUTOMATIC ACQUISITION OF VIN CODE icon and confirm (small car icon); If the acquisition fails, enter the vehicle specifications manually.
- move the mouse pointer to the AUTOMATIC TEST FOR ALL COMPUTERS icon (2nd from the top),
- move the mouse pointer to the AUTOMATIC TEST FOR ALL COMPUTERS bar in the centre of the screen and confirm. This launches the multiplex network test.
- when the test ends, a screen with the multiplex test results is displayed,
- move the mouse pointer to the CONTINUE icon at the bottom on the right-hand side of the screen, then confirm. A tree diagram of the computers is displayed on the screen:
  - WITH FAULTS,
  - NOT DETECTED
  - NOT DETECTED OR NOT FITTED,
  - NOT RECOGNISED*,
  - WITHOUT FAULTS.

  * fault finding cannot be carried out on these unrecognised computers, or they are intended for options not installed on the vehicle. If the option is actually available on the vehicle, check the condition of the fuses, relays and connections to that computer).

  If your CLIP tool is connected to a printer, print the table by moving the cursor to the PRINT icon (at the top on the right-hand side of the screen) and attach the printout to the Maintenance Booklet.
- to end the test, place the mouse pointer on the RETURN TO MAIN MENU icon (at the top on the left-hand side of the screen), then confirm,
- Move the mouse pointer to the EXIT icon (at bottom right-hand side of the screen), then confirm.
- switch off the ignition and disconnect the diagnostic socket.

II - ADDITIONAL OPERATIONS:

To replace the different components subject to vehicle maintenance, refer to the vehicle repair procedures.

1 - Replacing spark plugs (for petrol engines):

Replace the spark plugs.

2 - Replacing the air filter:

Replace the air filter.

3 - Replacing the passenger compartment filter (if fitted to the vehicle):

Replace the passenger compartment filter.

4 - Replacing the timing belt and the tensioners and pulleys:

Replace the timing belt and the tensioners and pulleys.

Use the belt kits when replacing them.

WARNING
A belt must always be replaced if it has been removed.

5 - Replacing the accessories belt and the tensioners and pulleys:

Replace the accessories belt and the tensioners and pulleys.

Use the belt kits when replacing them.

WARNING
The belt must be replaced if it has been removed.

6 - Replacing the petrol filter:

Replace the petrol filter

7 - Replacing the diesel filter:

Replace the diesel filter.

If the diesel filter replacement interval has not been reached, you must purge the diesel filter.

8 - Replacing the brake fluid:

Replace the brake fluid.

For vehicles fitted with ESP, **RENAULT** recommends a brake fluid with low viscosity in cold conditions (maximum **750 mm^2/s** at **40°C**).

9 - Replacing the coolant:

Drain and fill in accordance with the procedures described in **TECHNICAL NOTE 3620A** or in the vehicle repair procedures.

10 - Checking the rear brake lining for vehicles fitted with drum brakes:

Remove any dust from the brake linings using a brake cleaning product.

Check the wheel cylinders for any possible leaks.

Depress the brake pedal to bring the linings and drums into contact.

11 - Replacing the particle filter (for DIESEL engines):

Replace the particle filter.

12 - Checking the climate control:

a - For vehicles registered before January 2005:

Check the climate control circuit refrigerant level using a filling station.

Refer to the filling station user manual before carrying out this operation.

b - For vehicles registered from January 2005 onwards:

- Cleaning the climate control air circuit.

- Checking the efficiency of the climate control:

- keep the vehicle in the shade for approximately an hour (doors, windows and bonnet closed, centre air vent open),
- start the vehicle's engine (leave it idling),
- make sure that the air conditioning is not activated,
- adjust the climate control controls:
  - temperature: maximum cold setting,
  - distribution: centre air vent (all at face level),
  - ventilation: maximum setting,
  - recirculation: open (external air position)
- check the temperature of the air blown out of the centre air vents: the air temperature from the vents is the same as the ambient air temperature ± **5°C**.
- activate the air conditioning,
- check the temperature of the air blown out of the centre air vents, **6 minutes** after switching on the air conditioning, and refer to the table below.

Table of ambient air temperatures corresponding to acceptable air temperatures for air blown from the centre air vents:

Ambient temperature	Acceptable air temperature for air blown from the centre air vents
15°C	between **4°C** and **8°C**
20°C	between **6°C** and **10°C**
25°C	between **8°C** and **13°C**
30°C	between **12°C** and **16°C**

35°C	between **17°C** and **20°C**
40°C	between **21°C** and **25°C**

III - SPECIAL FEATURES OF VEHICLES WHICH USE LIQUID PETROLEUM GAS OR COMPRESSED NATURAL GAS:

Servicing intervals are the same for vehicles using LPG or CNG as those for equivalent models with petrol engines.

To inspect and replace the different components subject to maintenance, refer to the vehicle repair procedures.

1 - Additional operations for vehicles using LPG:

Every 18,000 miles (30,000 km):

- check the safety solenoid valve,
- check that there is a plastic blanking cover on the safety valve,
- check and adjust the valve clearance (for 1.2 engines),
- bleed the expansion valve.

2 - Additional operations for vehicles using CNG:

Every 18,000 miles (30,000 km) or 2 years:

- visual inspection of the tank and its frame (no corrosion, dent or damage).

Note:

A periodic tank test may be requested in accordance with national regulations.

RENAULT

Technical Note 6025A

FXX, and F9Q - GXX, and G9T or G9U - KXX, and K9K - ZXX, and ZD3

Cleaning direct injection diesel engine fuel circuits

F9Q - G9T - G9U - K9K - ZD3 engines

Sub-sections concerned: 13B - 19C

Procedure for cleaning the fuel circuit when a direct injection diesel engine has been filled with petrol instead of diesel fuel.

77 11 329 602 **AUGUST 2005** **Edition Anglaise**

"The repair methods given by the manufacturer in this document are based on the technical specifications current when it was prepared.

The methods may be modified as a result of changes introduced by the manufacturer in the production of the various component units and accessories from which his vehicles are constructed."

All copyrights reserved by Renault.

The reproduction or translation in part of whole of the present document, as well as the use of the spare parts reference numbering system, are prohibited without the prior written consent of Renault.

© Renault s.a.s. 2005

Cleaning direct injection diesel engine fuel circuits

Contents

Page

13A **FUEL SUPPLY**

Fuel circuit: Draining 13A-1

Fuel circuit: Draining

ZXX

Special tooling required	
Mot. 1311-08	Union for measuring fuel pressure

Equipment required
petrol or diesel tank drain pneumatic siphoning pump
diagnostic tool

This procedure relates to vehicles fitted with the BOSCH EDC16 injection system with ignition key.

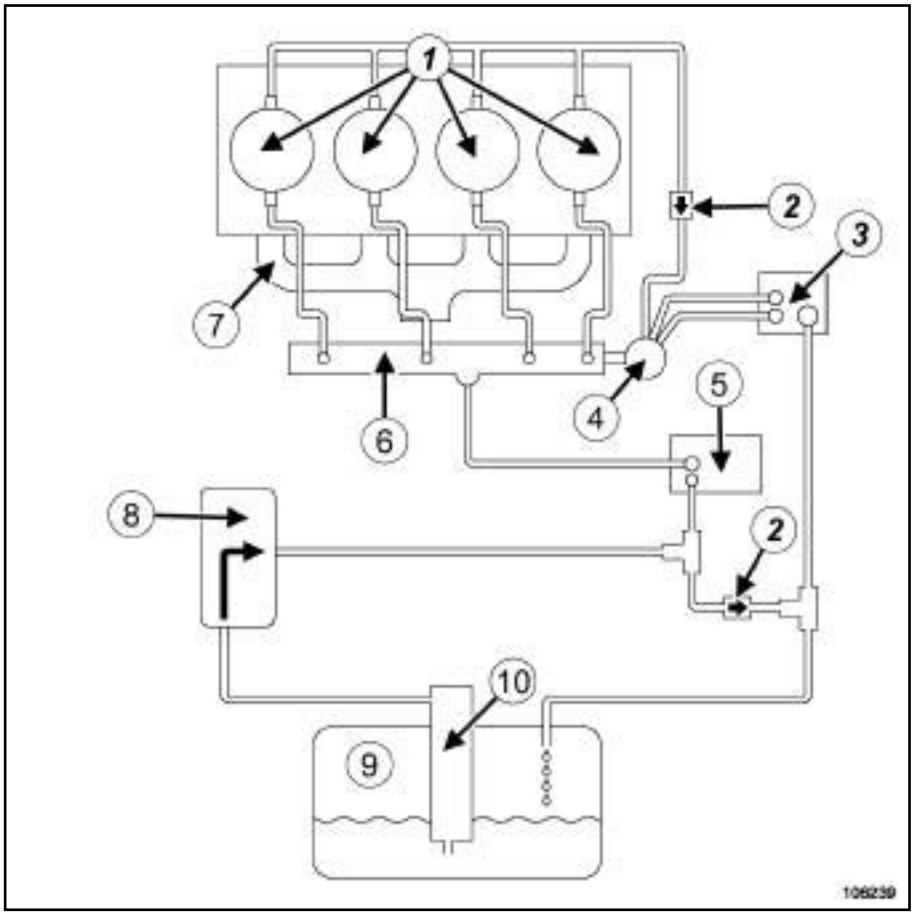

106239

(**1**)	injectors
(**2**)	anti-return valves
(**3**)	diesel temperature sensor
(**4**)	four-way union
(**5**)	high pressure pump
(**6**)	injection rail fitted with a pressure sensor
(**7**)	inlet manifold
(**8**)	diesel filter
(**9**)	tank
(**10**)	« pump-sender unit » assembly

ZXX

I - DRAINING THE LOW PRESSURE CIRCUIT

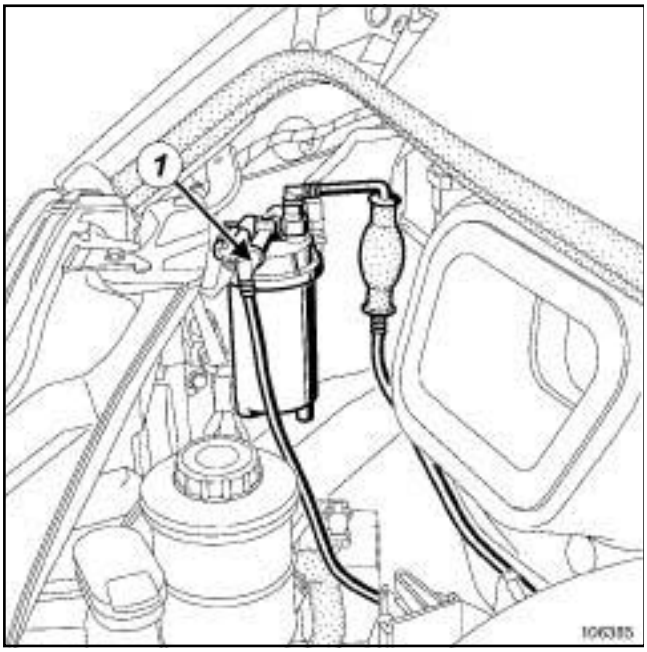

106385

Position the union **(Mot. 1311-08)** between the high pressure pump supply pipe (**1**) and the diesel filter output quick-release union.

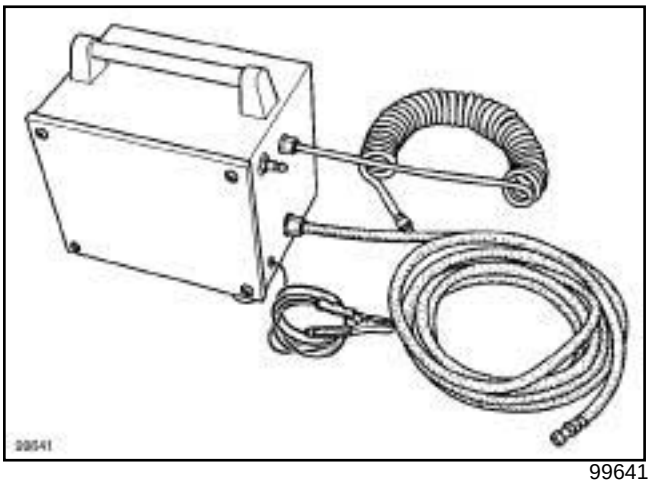

99641

Connect the **petrol or diesel tank drain pneumatic siphoning pump** to the union **(Mot. 1311-08)**.

Remove the fuel filler cap from the tank so that air can enter.

Run the **petrol or diesel tank drain pneumatic siphoning pump**.

Drain the low pressure circuit completely.

Remove the diesel filter (see the procedure for the vehicle concerned).

Replace the diesel filter cartridge.

Blow air through the tank-diesel filter pipe.

> Note:
>
> If the pipe has several sections, blow air through all of them.

II - DRAINING THE HIGH PRESSURE CIRCUIT

Switch off the ignition.

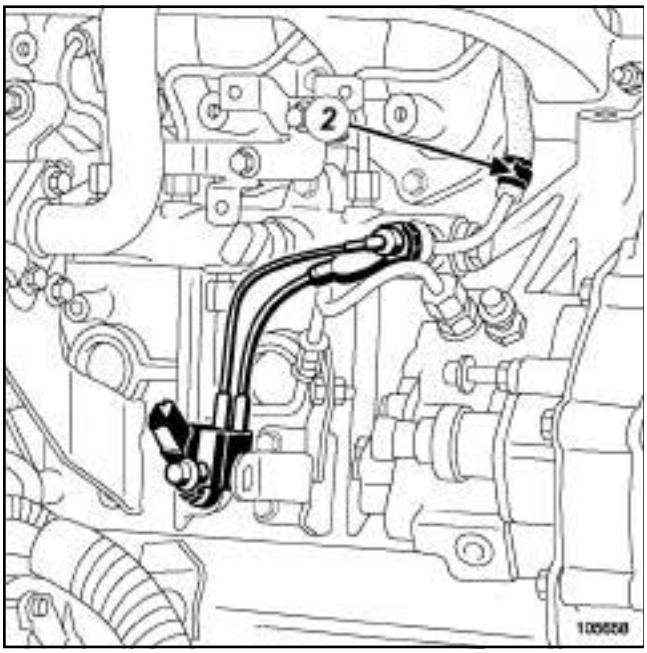

105658

Disconnect:

- the injector connectors,
- the high pressure pump supply pipe,
- the injector return pipe (**2**) from the four-way union.

Position a receptacle to collect the fuel outflow from the injector return pipe.

Switch on the ignition and run the starter for **5 seconds**.

Run through this start procedure **3 times** (to recover as much fuel as possible from the high pressure circuit).

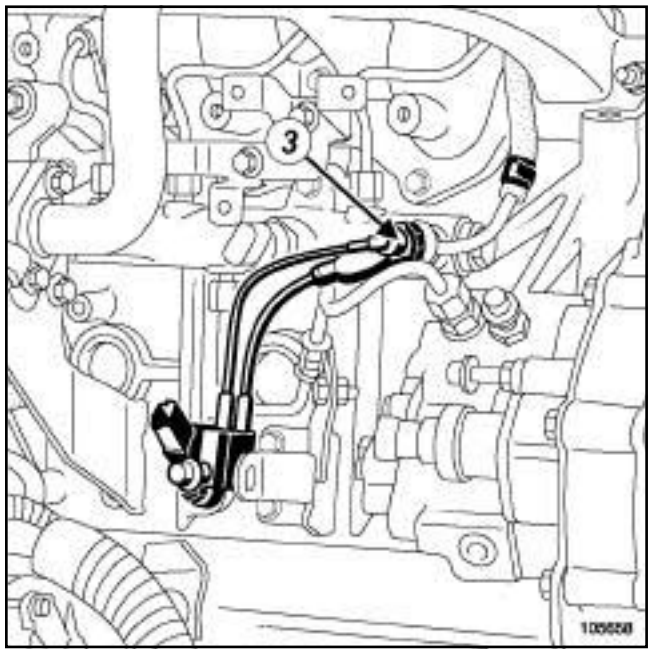

105658

Position the union between the temperature sensor and the four-way union.

Connect the **petrol or diesel tank drain pneumatic siphoning pump** and the union.

Run the **petrol or diesel tank drain pneumatic siphoning pump**.

Disconnect:

- the injector return rail.
- the return pipe from the high-pressure pump.

WARNING
Protect sensitive areas from fuel outflow.

Fill up the tank.

Reprime the fuel circuit (see the procedure for the vehicle).

Bleed the fuel circuit (see the procedure for the vehicle).

Clear the faults using the **diagnostic tool**.

KXX

Special tooling required	
Mot. 1311-08	Union for measuring fuel pressure
Mot. 1711	Injector flow measuring kit

Equipment required
petrol or diesel tank drain pneumatic siphoning pump
diagnostic tool

This procedure relates to vehicles fitted with the DELPI DDCR injection system with a Renault card.

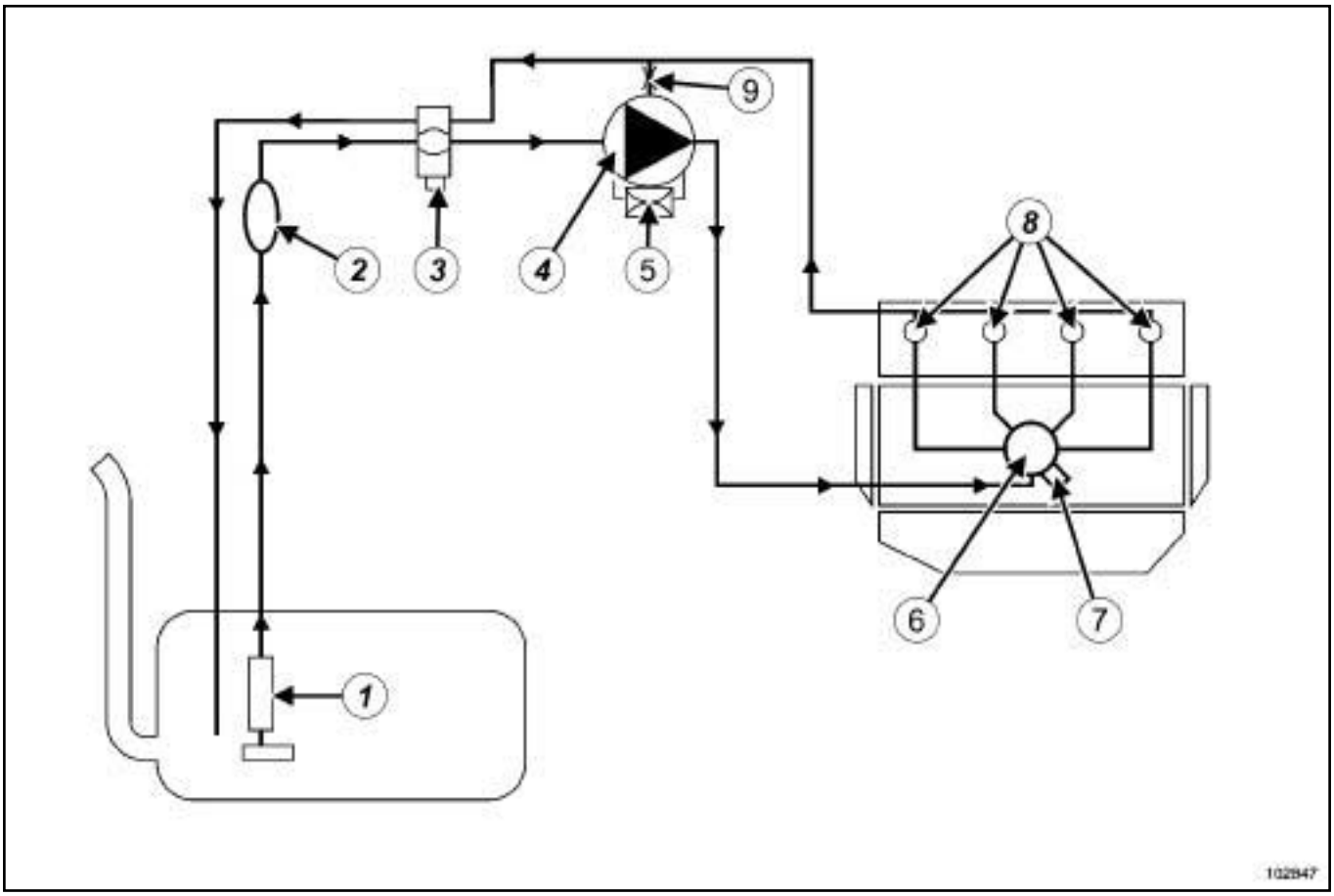

102847

(**1**) fuel sender
(**2**) manual priming pump
(**3**) fuel filter
(**4**) high pressure pump
(**5**) fuel flow actuator
(**6**) injection rail
(**7**) pressure sensor
(**8**) injectors
(**9**) venturi

KXX

I - DRAINING THE LOW PRESSURE CIRCUIT

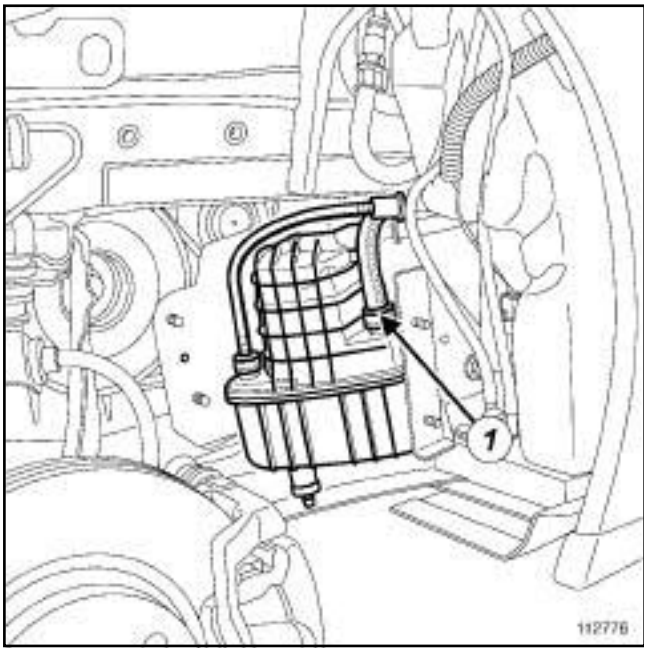

112776

Position the union **(Mot. 1311-08)** between the diesel filter output quick-release union and the high pressure pump supply pipe (**1**).

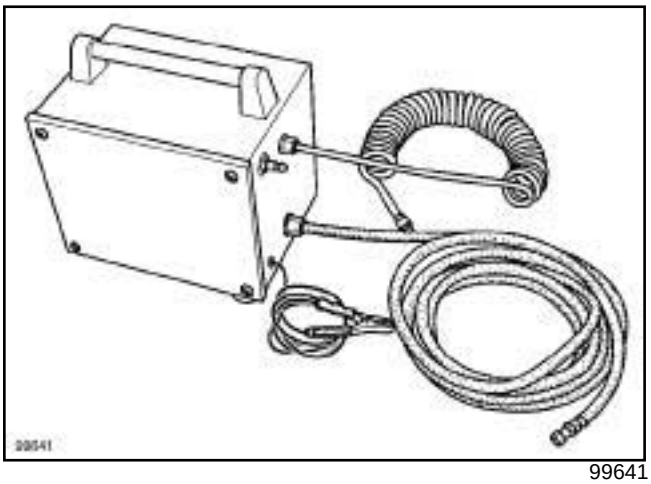

99641

Connect the **petrol or diesel tank drain pneumatic siphoning pump** to the union **(Mot. 1311-08)**.

Remove the fuel filler cap from the tank so that air can enter.

Run the **petrol or diesel tank drain pneumatic siphoning pump**.

Drain the low pressure circuit completely.

Remove the diesel filter (see the procedure for the vehicle concerned).

Replace the diesel filter or the diesel filter cartridge.

Blow air through the tank-diesel filter pipe.

> Note:
>
> If the pipe has several sections, blow air through all of them.

II - DRAINING THE HIGH PRESSURE CIRCUIT

Switch off the ignition.

KXX

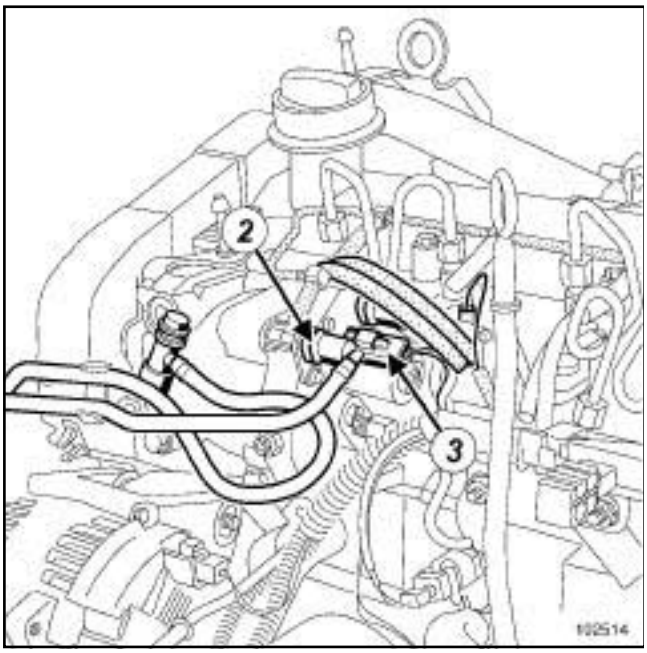

102514

Disconnect the return pipe (**2**) from the high pressure pump.

Position a receptacle to collect the fuel outflow.

Disconnect the fuel flow actuator connector (**3**) from the high pressure pump.

Connect a test IMV or the adapter for tool **(Mot. 1711)**.

Disconnect the injector connectors.

Start the engine.

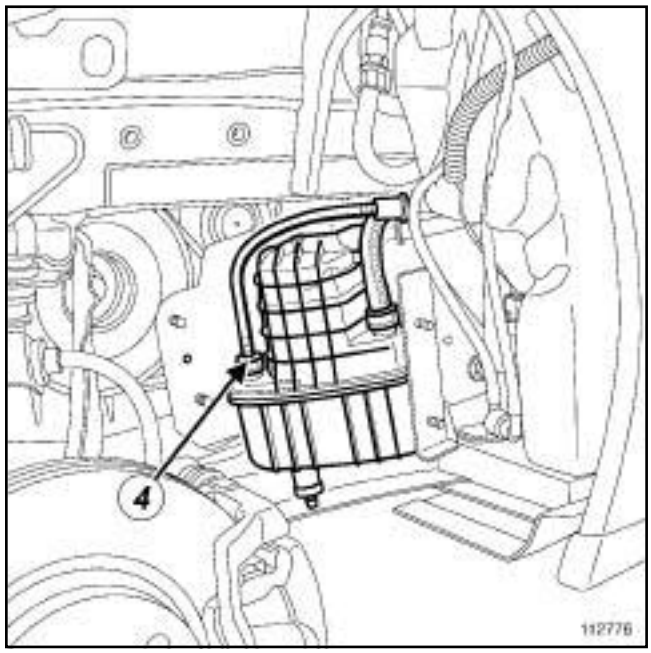

112776

Run through this start procedure **3 times** (to recover as much fuel as possible from the high pressure circuit).

Position the union **(Mot. 1311-08)** on the diesel filter return pipe (**4**).

Connect the **petrol or diesel tank drain pneumatic siphoning pump** to the union **(Mot. 1311-08)**.

Plug the end of the union which is not being used.

Run the **petrol or diesel tank drain pneumatic siphoning pump**.

KXX

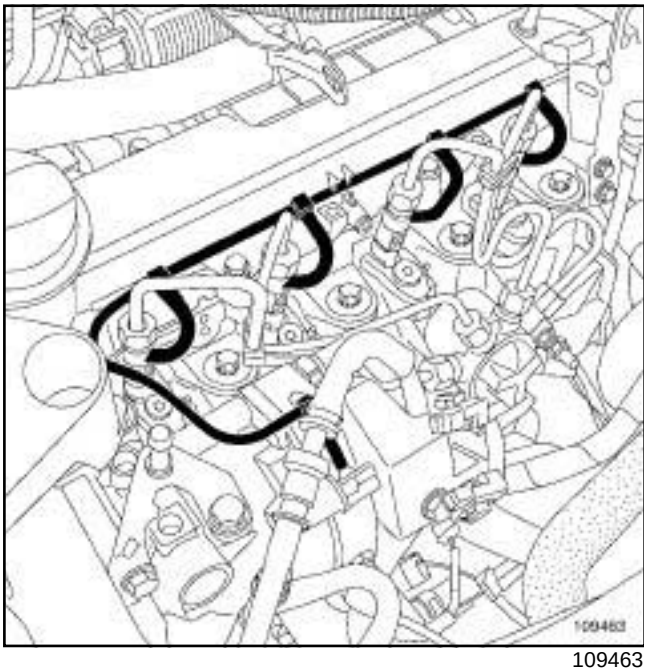

109463

Disconnect:

- the fuel return pipe from the high pressure pump (pump-filter-tank pipe),
- the return pipes from the injectors.

Blow air through:

- the return circuit,
- the pump venturi.

WARNING
protect sensitive areas from fuel outflow.

Fill up the tank.

Reprime the fuel circuit (see the procedure for the vehicle).

Bleed the fuel circuit (see the procedure for the vehicle).

Clear the faults using the **diagnostic tool**.

GXX – FXX

Special tooling required		
Mot. 1311-08	FXX – GXX	Union for measuring fuel pressure

Equipment required
petrol or diesel tank drain pneumatic siphoning pump
diagnostic tool

This procedure relates to vehicles fitted with the BOSCH EDC15 injection system with ignition key.

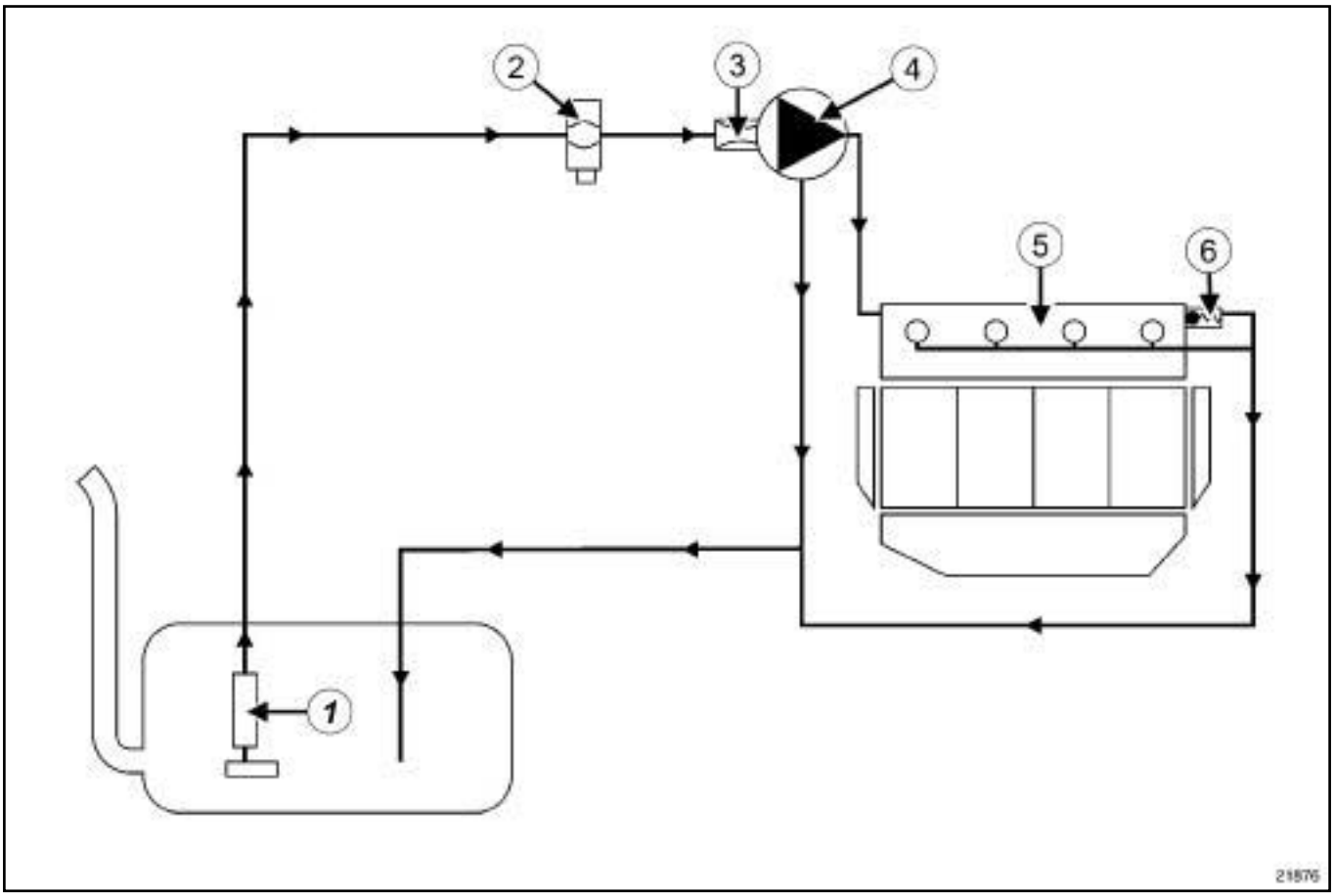

21876

(**1**) pump-sender unit assembly
(**2**) fuel filter
(**3**) pressure regulator
(**4**) high pressure pump
(**5**) injection rail
(**6**) pressure limiter

GXX – FXX

I - DRAINING THE LOW PRESSURE CIRCUIT

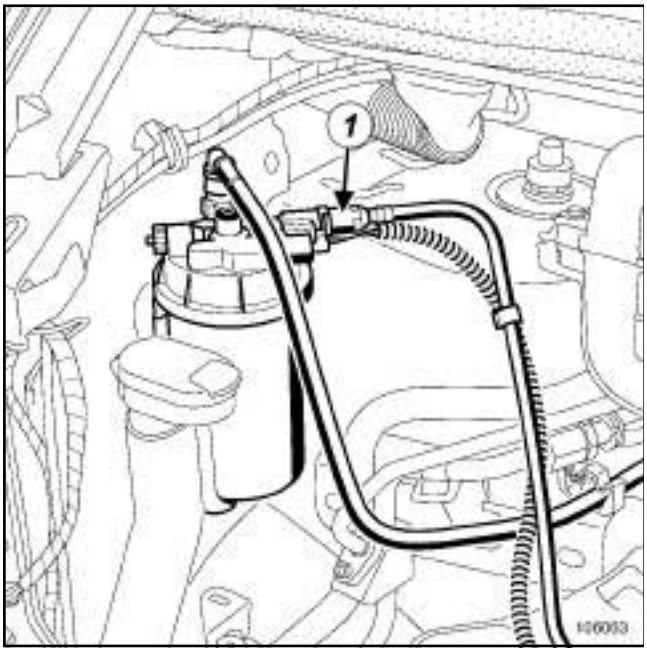

106063

Position the union **(Mot. 1311-08)** between the diesel filter output quick-release union and the high pressure pump supply pipe (**1**).

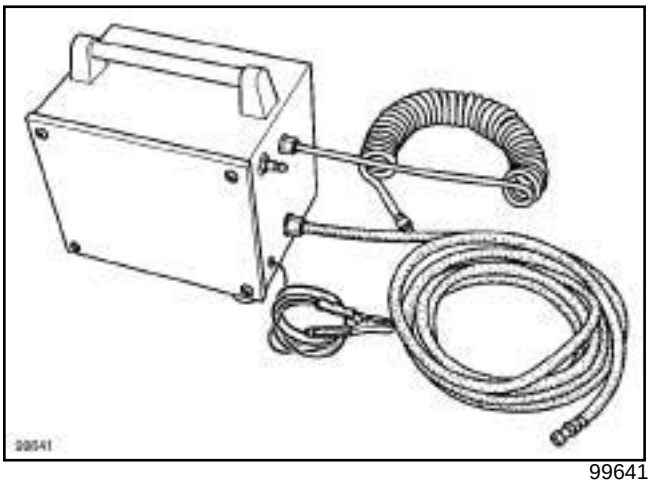

99641

Connect the **petrol or diesel tank drain pneumatic siphoning pump** to the union **(Mot. 1311-08)**.

Remove the fuel filler cap from the tank so that air can enter.

Run the **petrol or diesel tank drain pneumatic siphoning pump**.

Drain the low pressure circuit completely.

Remove the diesel filter (see the procedure for the vehicle concerned).

Replace the diesel filter or the diesel filter cartridge.

Blow air through the tank-diesel filter pipe.

> Note:
>
> If the pipe has several sections, blow air through all of them.

II - DRAINING THE HIGH PRESSURE CIRCUIT

Switch off the ignition.

GXX – FXX

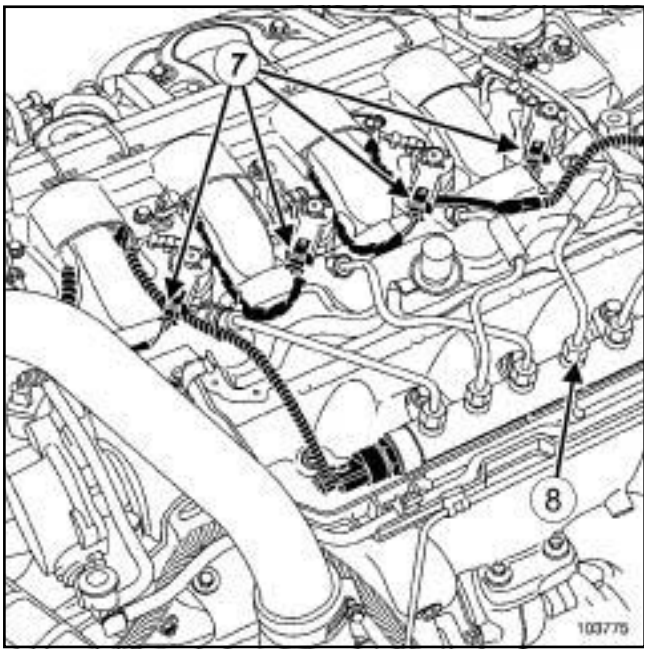

103775

Disconnect:

- the injector connectors (**7**),
- the diesel filter-high pressure pump pipe (**8**),
- the fuel tank return pipe from the temperature sensor.

Position a receptacle to collect the fuel outflow upstream of the temperature sensor.

Switch on the ignition and run the starter for **5 seconds**.

Run through this start procedure **3 times** (to recover as much fuel as possible from the high pressure circuit).

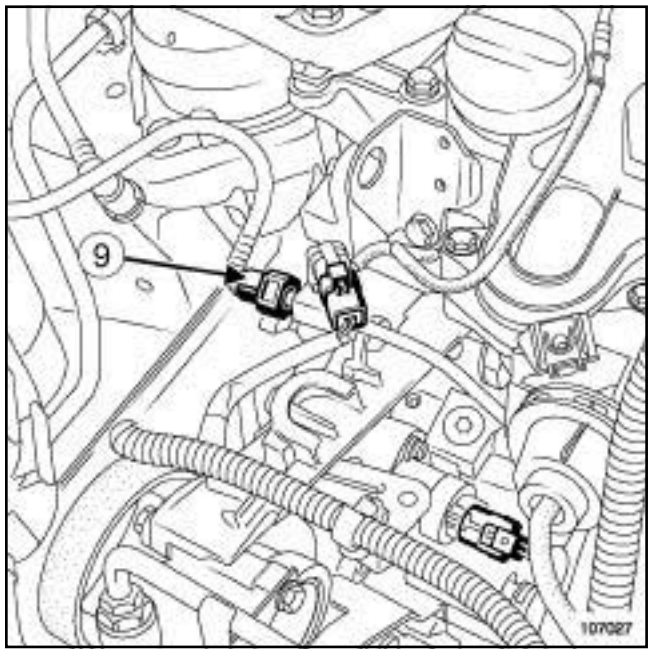

107027

Position the union **(Mot. 1311-08)** between the diesel temperature sensor and the fuel tank return pipe (**9**).

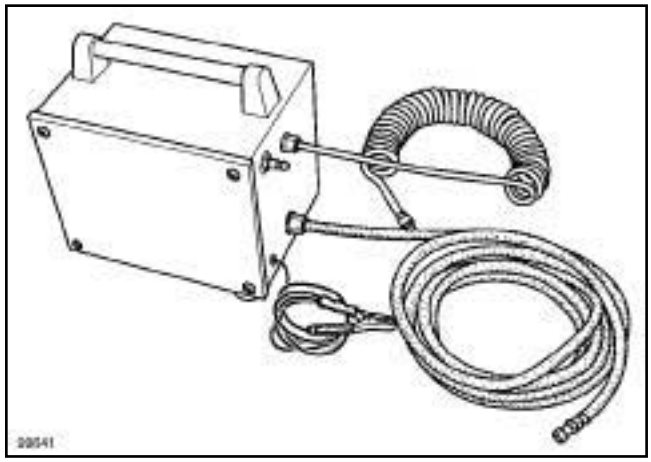

99641

Connect the **petrol or diesel tank drain pneumatic siphoning pump** to the union **(Mot. 1311-08)**.

Run the **petrol or diesel tank drain pneumatic siphoning pump**.

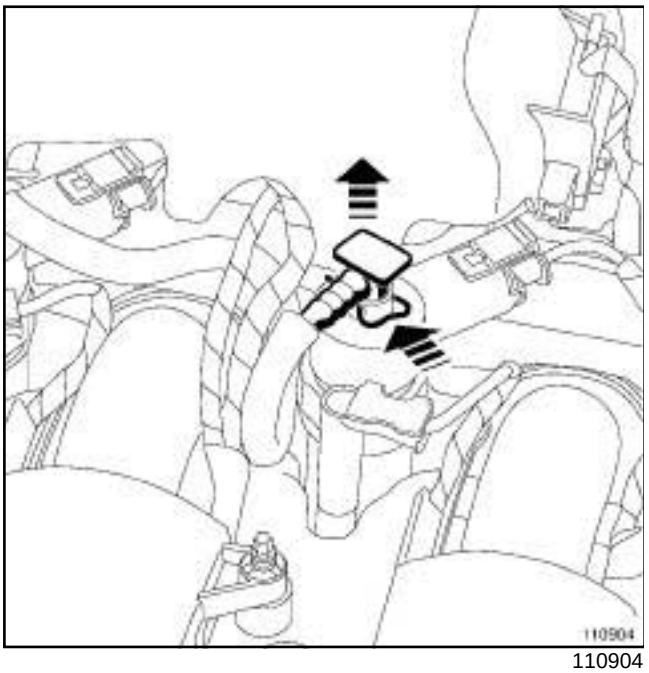

110904

Disconnect:

- the injector return pipes,
- the return pipe from the injection rail.

Blow air through the pipes.

WARNING
protect sensitive areas from fuel outflow.

Fill up the tank;

Reprime the fuel circuit (see the procedure for the vehicle).

Bleed the fuel circuit (see the procedure for the vehicle).

Clear the faults using the **diagnostic tool**.

RENAULT

Technical Note6029A

JAX - JHX, and JH1 or JH3, and RENAULT - JRX, and RENAULT

JA3 - JA5 - JH1 - JH3 - JR5 manual gearboxes

TWINGO: X06X - KANGOO: XCXX - CLIO II: XBXX - CLIO III: XRXX - MODUS: XPXX - LOGAN: LS0X - MEGANE II: XMXX - LAGUNA II: XGXX

Sub-section concerned: 21A

This note cancels and replaces Technical Note 3661A and the MR for JH-JR gearboxes of March 2001

Edition 2

77 11 343 422 **JULY 2005** **Edition Anglaise**

"The repair methods given by the manufacturer in this document are based on the technical specifications current when it was prepared.

The methods may be modified as a result of changes introduced by the manufacturer in the production of the various component units and accessories from which his vehicles are constructed."

All copyrights reserved by Renault.

The reproduction or translation in part of whole of the present document, as well as the use of the spare parts reference numbering system, are prohibited without the prior written consent of Renault.

© Renault s.a.s. 2006

JA3 - JA5 - JH1 - JH3 - JR5 manual gearboxes

Contents

Page

21A MANUAL GEARBOX

Manual gearbox oil: Specifications 21A-1

Manual gearbox: Specifications 21A-2

Manual gearbox: Fault finding 21A-5

Reverse gear switch: Fault finding 21A-6

Manual gearbox: check 21A-7

Special tooling 21A-9

Manual gearbox: Parts and consumables for the repair work 21A-10

Manual gearbox: Precautions for repair 21A-11

Manual gearbox: List and location of components 21A-12

Mechanism housing:Removal 21A-18

Shafts and synchronisers:Removal 21A-21

Shafts and synchronisers: Adjustment 21A-24

Output shaft: Removal - Refitting 21A-27

Manual gearbox differential: Removal - Refitting 21A-31

Manual gearbox differential bearing: Removal - Refitting 21A-34

Pressure plate housing bearing: Removal - Refitting 21A-38

Clutch housing bearing: Removal - Refitting 21A-41

21A MANUAL GEARBOX

Selector fork shaft ring: Removal - Refitting 21A-45

Manual gearbox selector shaft: Removal - Refitting 21A-46

Shafts and synchronisers: Refitting 21A-47

Mechanism housing: Refitting 21A-51

Manual gearbox oil: Specifications

JHX – JRX, and JR5 – JAX, and JA5

Type	Capacity (litres)	Viscosity reference
JA3 - JH1 - JH3	2.8	TRJ 75W80
JA5 - JR5	2.5	TRJ 75W80

Filling

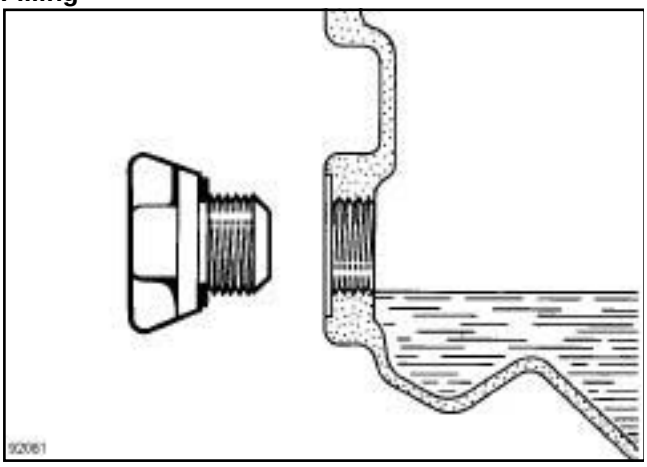

92081

Fill up as far as the fuel filler cap opening.

JRX, and JR5 – JAX, and JA5

GEAR RANGE: JA5 / JR5

Suffix	First	Second	Third	Fourth	Fifth	Reverse gear	Final drive	Spee-dome-ter
Sequential gearbox								
JA5-001	11/41	21/43	28/37	35/34	41/31	11/39	16/55	None
JR5 open differential gearbox								
JR5-011	11/37	22/41	28/37	34/35	39/32	11/39	15/61	None
JR5 closed differential gearbox								
JR5-102	11/41	21/43	28/37	35/34	41/31	11/39	15/56	None
JR5-103	11/41	21/43	28/37	35/34	41/31	11/39	15/58	None
JR5-104	11/41	21/43	28/39	31/34	37/33	11/39	15/61	None
JR5-108	11/41	21/43	28/37	35/34	42/31	11/39	15/56	None
JR5-110	11/41	21/43	28/37	35/34	41/31	11/39	15/58	None
JR5-113	11/41	21/43	28/37	35/34	41/31	11/39	16/57	None
JR5-116	11/41	21/43	28/37	35/34	41/31	11/39	16/55	21/19
JR5-118	11/41	21/43	28/37	35/34	42/31	11/39	15/56	None
JR5-119	11/41	21/43	28/37	35/34	41/31	11/39	15/56	None
JR5-120	11/41	21/43	28/37	35/34	41/31	11/39	17/56	None
JR5-123	11/41	21/43	28/37	35/34	41/31	11/39	16/57	None
JR5-124	11/41	21/43	28/37	35/34	41/31	11/39	16/55	None
JR5-125	11/41	21/43	28/37	35/34	39/32	11/39	14/63	None
JR5-126	11/37	22/41	28/37	35/34	42/31	11/39	15/58	21/19
JR5-128	11/41	21/43	28/37	35/34	41/31	11/39	16/55	None
JR5-129	11/41	21/43	28/37	35/34	39/32	11/39	14/63	None
JR5-131	11/41	21/43	28/37	35/34	42/31	11/39	15/61	None
JR5-144	11/37	22/41	28/37	35/34	42/31	11/39	15/58	21/18
JR5-145	11/41	22/43	28/37	35/34	41/31	11/39	16/55	21/18
JR5-150	11/41	21/43	28/37	35/34	42/31	11/39	15/58	None

JAX, and JA3 – JHX

GEAR RANGE: JA3 / JH1 / JH3

Suffix	First	Second	Third	Fourth	Fifth	Reverse gear	Final drive	Spee-dome-ter
Sequential gearbox								
JA3-001	11/41	21/43	28/39	34/35	39/32	11/39	14/61	None
JH1 open differential gearbox								
JH1 -004	11/37	22/41	28/37	34/35	39/32	11/39	14/59	21/19
JH1 -013	11/37	22/41	28/37	34/35	39/32	11/39	15/61	21/19
JH1 -014	11/37	22/41	28/37	30/29	39/32	11/39	15/58	21/19
JH1 -015	11/37	22/41	28/37	30/29	41/31	11/39	15/56	21/19
JH1 -016	11/37	22/41	28/37	34/35	39/32	11/39	14/59	None
JH1 -017	11/37	22/41	28/37	34/35	39/32	11/39	15/61	None
JH1 -018	11/37	22/41	28/37	30/29	41/31	11/39	15/56	21/19
JH1 -053	11/41	21/43	28/39	34/35	39/31	11/39	14/59	22/18
JH3 open differential gearbox								
JH3-052	11/41	21/43	28/39	34/35	39/32	11/39	14/59	22/18
JH3-053	11/37	22/41	28/37	30/29	42/41	11/39	15/58	22/18
JH3-054	11/41	21/43	28/37	30/29	41/31	11/39	14/63	22/18
JH3-056	11/41	21/43	28/37	30/29	41/31	11/39	14/61	22/18
JR3 closed differential gearbox								
JH3-105	11/41	21/43	28/39	31/34	37/33	11/39	14/59	None
JH3-106	11/41	21/43	28/39	34/35	39/32	11/39	14/63	None
JH3-128	11/41	21/43	28/39	34/35	39/32	11/39	14/61	None
JH3-129	11/41	21/43	28/39	31/34	37/33	11/39	15/61	None
JH3-131	11/41	21/43	28/39	31/34	37/33	11/39	15/58	None
JH3-132	11/37	22/41	28/37	30/29	42/41	11/39	15/58	None
JH3-137	11/41	21/43	28/39	31/34	37/33	11/39	14/59	None
JH3-141	11/37	22/41	28/37	30/29	42/41	11/39	15/58	None
JH3-142	11/41	21/43	28/39	31/34	37/33	11/39	15/61	None
JH3-143	11/41	21/43	28/39	31/34	37/33	11/39	15/61	None
JH3-144	11/41	21/43	28/39	31/34	37/33	11/39	15/61	None

JAX, and JA3 – JHX

Suffix	First	Second	Third	Fourth	Fifth	Reverse gear	Final drive	Spee-dome-ter
JH3-145	11/37	22/41	28/37	30/29	42/31	11/39	16:57	None
JH3-150	11/37	22/41	28/37	30/29	42/41	11/39	15/58	None
JH3-154	11/41	21/43	28/39	31/34	37/33	11/39	16/61	None
JH3-155	11/41	21/43	28/39	31/34	37/33	11/39	15/58	None
JH3-172	11/41	21/43	28/39	31/34	37/33	11/39	15/61	None

JHX – JRX, and JR5 – JAX, and JA5

Fault finding

Faults: (after checking the clutch)	**Oil level or grade**	**External control**	**Syn-chroni-sation**	**Gearing**	**Selector rod hub**	**Internal control**	**Bea-rings**	**Engine-gear-box support**
Gear grinding	1	2	3		4			
One or more gears cannot be selected	2	1	3	3	3	3		
Jumping out of gear		1		2	2	3		
One or more gears jammed					2	1		
Noisy	1			3			2	

The numbers indicate the order of priority for fault finding.

JAX – JHX – JRX, and JR5

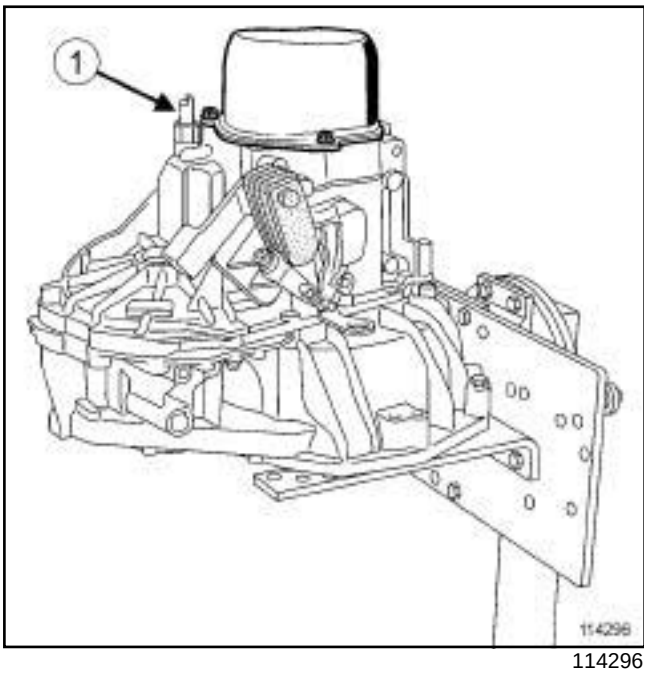

114296

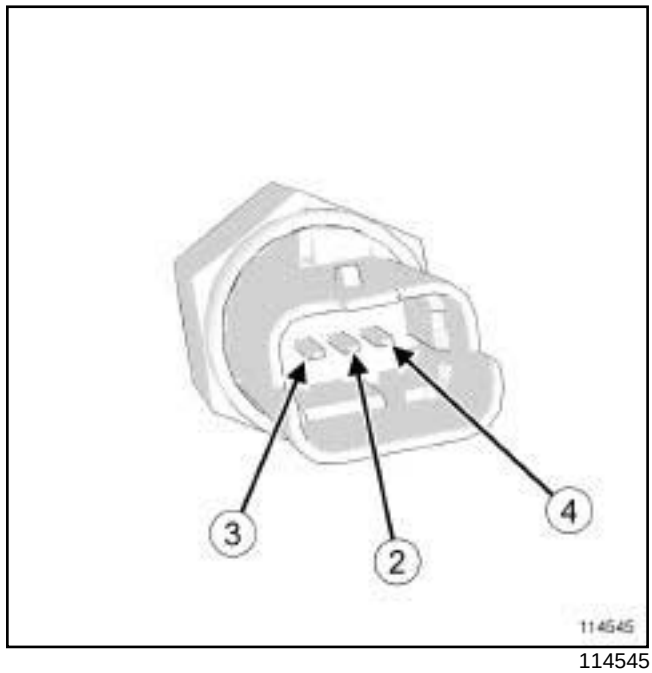

114545

Check the dual-function Reversing/Gear engaged switch (**1**) using a multimeter and internal connections (**2**) (**3**) (**4**) .

Selected gear	**Continuity between 2 and 3**	**Continuity between 2 and 4**
Reverse gear	Yes	No
Gears engaged	No	No
Neutral	No	Yes

JAX – JHX – JRX, and JR5

Gearing:

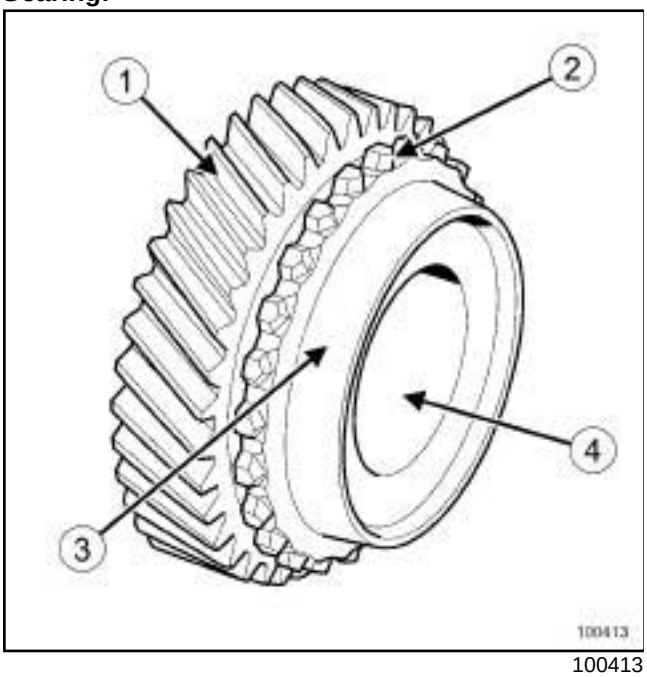

100413

When checking, make sure that you pay particular attention to the appearance of the teeth, especially that of the chamfers and claws.

Check that:

- the teeth (**1**) are neither broken nor chipped,
- the claws (**2**) are not broken, chipped or worn,
- the friction cone (**3**) shows no sign of being scratched or blue stains,
- the inner wall (**4**) shows no sign of sticking or wear.

Selector rod hub:

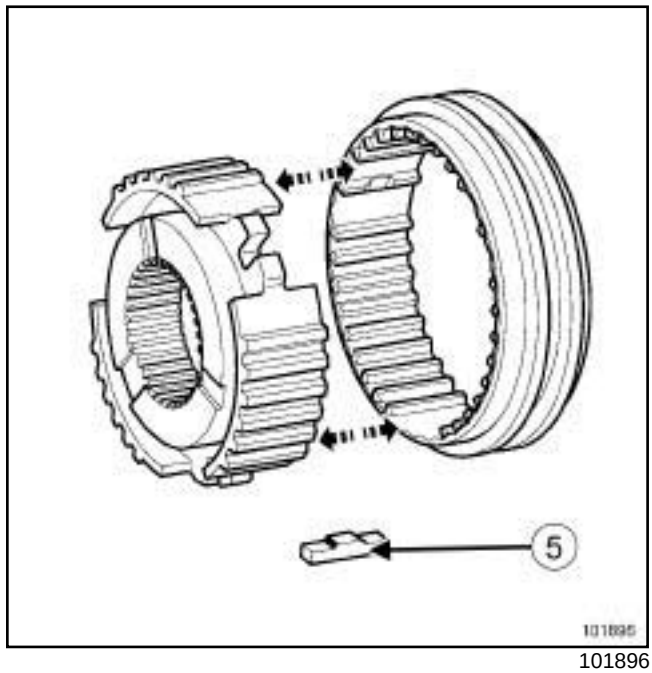

101896

Check:

- the selector rod slides into the hub without any problem,
- that the cotters (**5**) are in good condition.

Synchroniser ring:

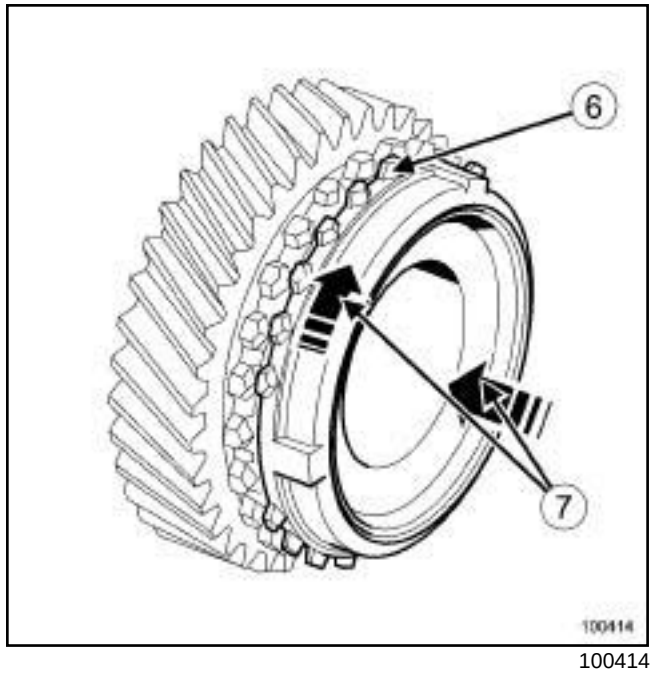

100414

Check that the claw teeth (**6**) show no sign of wear or any fractures.

To check that the synchroniser ring is working correctly, push the ring on the friction cone and rotate (**7**) : the ring should not turn. If it does turn, replace the synchroniser ring.

JAX – JHX – JRX, and JR5

Bearing:

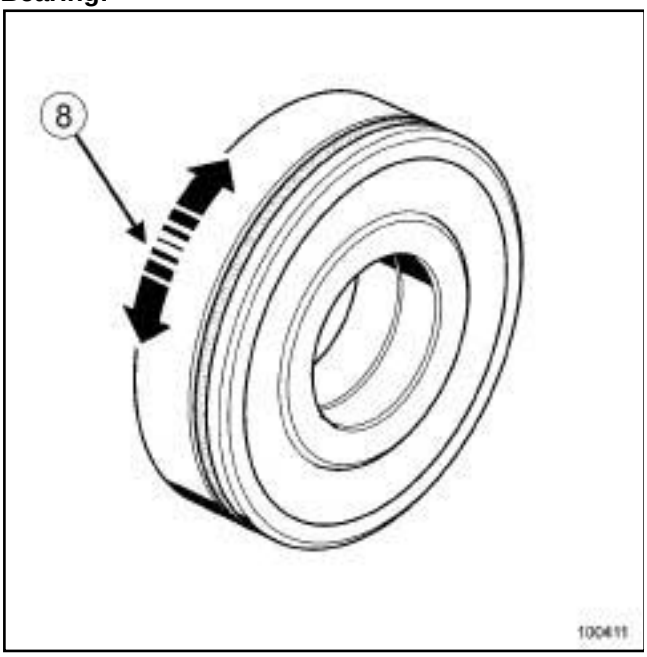

100411

Make sure the bearings (**8**) are rotating properly.

If a bearing rotates unevenly or noisily, it must be replaced.

JAX – JHX – JRX, and JR5

Special tooling required

Suffix	Description	Part no.
B.VI. 22-01	Bearing extractor tool	00 01 216 401
B.VI. 31-01	Set of drifts for roll pins	00 01 259 401
B.VI. 945	Differential oil seal fitting tool (JH open differential)	00 00 094 500
B.VI. 946	Stop ring on sunwheel fitting tool	00 00 094 600
B.VI. 949	Roll pin removal/refitting tool	00 00 094 900
B.VI. 1000-01	Fixed fifth gear extractor	00 00 100 001
B.VI. 1057	Differential locking tool	00 00 105 700
B.VI. 1058	Differential oil seal fitting tool (JR open differential)	00 00 105 800
B.VI. 1059	Differential bearing fitting tool	00 00 105 900
B.VI. 1161	Pre-adjustment washers and dial gauge support plate	00 00 116 100
B.VI. 1165	Output shaft bearing extraction tool	00 00 116 500
B.VI. 1170	Input shaft fifth hub extractor	00 00 117 000
B.VI. 1175	Fixed fifth gear fitting bolt	00 00 117 500
B.VI 1527	Backing plate for output shaft adjustment	00 00 152 700
B.VI. 1554	JC7 gearbox repair kit	00 00 155 400
B.VI. 1570	Tool for fitting locating balls	00 00 157 000
B.VI. 1576	Tool for fitting bearings on pressure plate housings	00 00 157 600
B.VI. 1581	Gearbox mounting	00 00 158 100
B.VI. 1601	Input shaft bearing fitting tool	00 00 160 100
B.VI. 1666	Differential oil seal fitting tool (JH/JR closed differential)	00 00 166 600

JAX – JHX – JRX, and JR5

I - PARTS ALWAYS TO BE REPLACED

The following parts must be replaced with new ones after being removed:

- lip seals,
- O-rings,
- lock rings,
- roll pins,
- input and output shaft bearing circlips,
- selector rod springs,
- hydraulic clutch slave cylinder.

II - CONSUMABLES

Component concerned	Type of product	Quantity	Part no.
Immerse all parts	Gearbox oil		
Housing assembly	Sealing resin	25 ml cartridge	77 11 237 640
Switch threading	Sealing resin	25 ml cartridge	77 11 237 640
Fifth fixed gear	Loctite FRENBLOC	24 cc bottle	77 01 394 071

Manual gearbox: Precautions for repair

JAX – JHX – JRX, and JR5

All work on the gearbox must be carried out in clean conditions.

Clean the gearbox carefully before opening it.

Operations on the gearbox must be carried out on a clean workbench or in a clean workshop.

During breaks, cover the open gearbox carefully to prevent foreign bodies from entering it.

Dismantle and handle the parts on a workbench with a shockproof coating (rubber or thick plastic).

Submerge all synchronising and rotating parts in a recommended oil.

Observe the tightening torques.

Carry out the specified adjustments or settings with care.

Be sure to properly refit parts in the same order and position after removal.

Mark the selector rods against the hubs before they are removed.

Make sure that the gearbox interior is kept free from dust or contamination when refitting.

The seals must be completely clean, undamaged and free from grease.

Tools used to refit seals must be clean and free from any grease.

Note:

Respect the type of bearings fitted to the gearbox. There are three types of bearing for different gearbox suffixes **(NTN - SNR - TIMKEN). They are not interchangeable.**

JAX, and JA3 – JHX

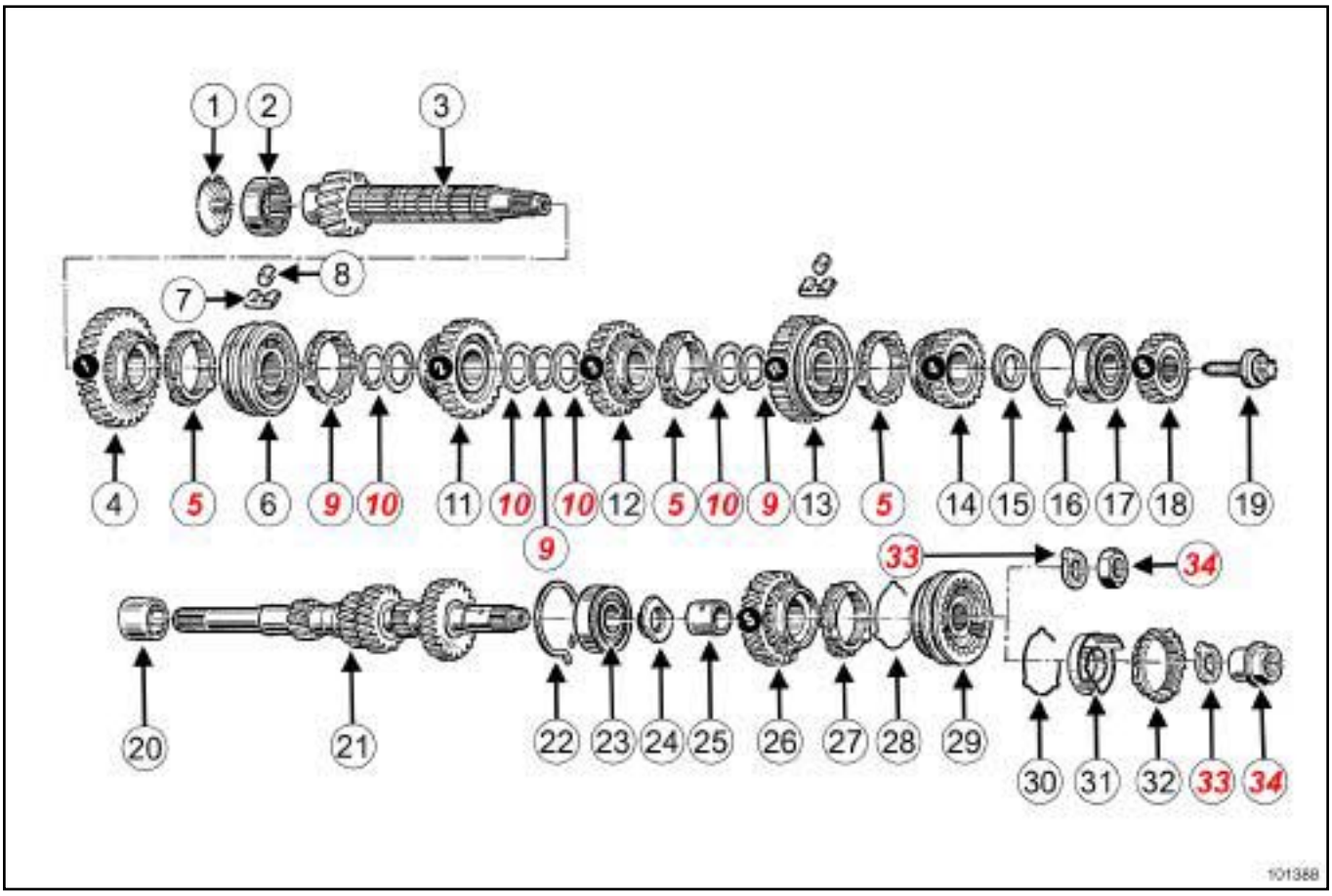

101388

(**1**) Oil deflector
(**2**) Bearing
(**3**) Output shaft
(**4**) First gear sprocket
(**5**) Synchroniser ring
(**6**) First/second selector rod hub
(**7**) Spring
(**8**) Roller
(**9**) Lock ring
(**10**) Splined washer
(**11**) Second gear sprocket
(**12**) Third gear sprocket
(**13**) Third-fourth selector rod hub
(**14**) Fourth gear sprocket
(**15**) Lock washer
(**16**) Retaining clip
(**17**) Bearing
(**18**) Fifth gear sprocket
(**19**) Output shaft bolt (70 Nm)
(**20**) Bearing guide
(**21**) Input shaft
(**22**) Retaining clip
(**23**) Bearing
(**24**) Lock washer
(**25**) Gear supporting ring
(**26**) Fifth gear sprocket
(**27**) Synchroniser ring
(**28**) Spring
(**29**) Selector rod hub
(**30**) Spring
(**31**) Friction cone
(**32**) Synchroniser ring
(**33**) Washer
(**34**) Input shaft nut (190 Nm)

JAX, and JA3 – JHX

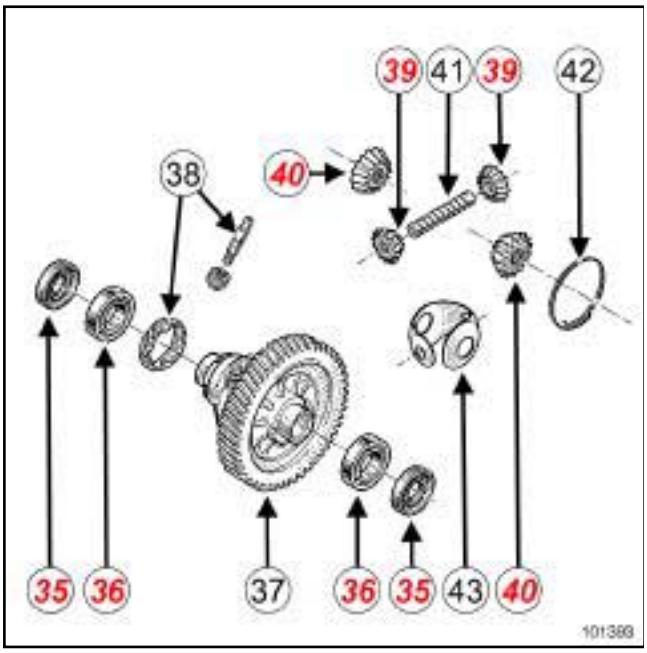

101393

(**35**) Differential seal

(**36**) Bearing

(**37**) Differential

(**38**) Speedometer sprocket (if fitted to the vehicle)

(**39**) Planet wheel

(**40**) Sunwheel

(**41**) Axis

(**42**) Shaft retaining spring

(**43**) Friction shell

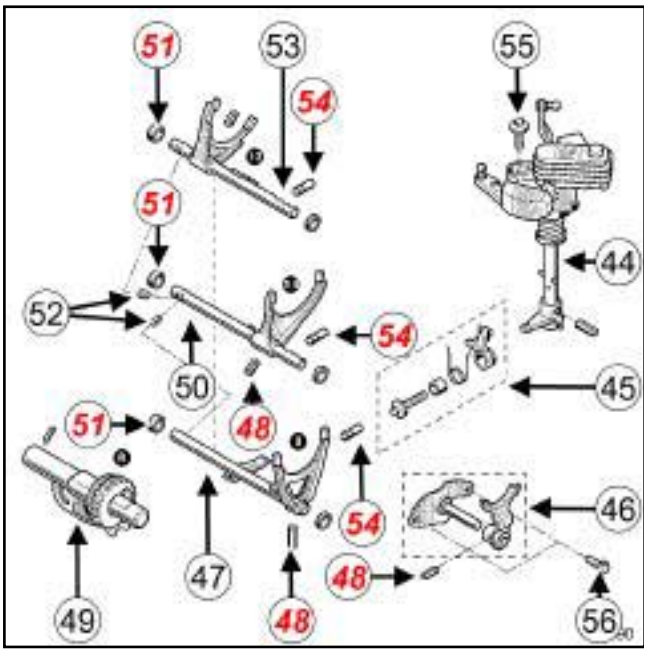

101390

(**44**) Selector shaft

(**45**) Gear shift catch

(**46**) Reverse gear brake fork and shaft

(**47**) Fifth gear fork and shaft

(**48**) Pin

(**49**) Reverse gear shaft

(**50**) Third/fourth gear fork and shaft

(**51**) Ring

(**52**) Lock shaft

(**53**) First/second gear fork and shaft

(**54**) Retaining ball cartridge

(**55**) Selector shaft bolt (20 Nm)

(**56**) Reverse gear fork shaft bolt (25 Nm)

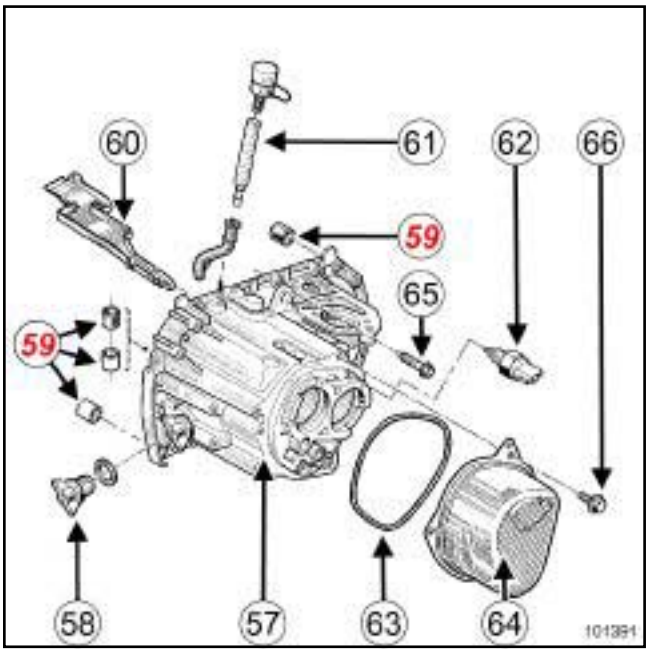

101391

(**57**) Pressure plate housing

(**58**) Filler plug

(**59**) Spacer

(**60**) Oil gutter channel

(**61**) Breather pipe

(**62**) Reverse gear sensor

(**63**) O-ring

(**64**) Fifth gear housing

(**65**) Gearbox bell housing bolt (25 Nm)

(**66**) Fifth gear housing bolt (25 Nm)

JAX, and JA3 – JHX

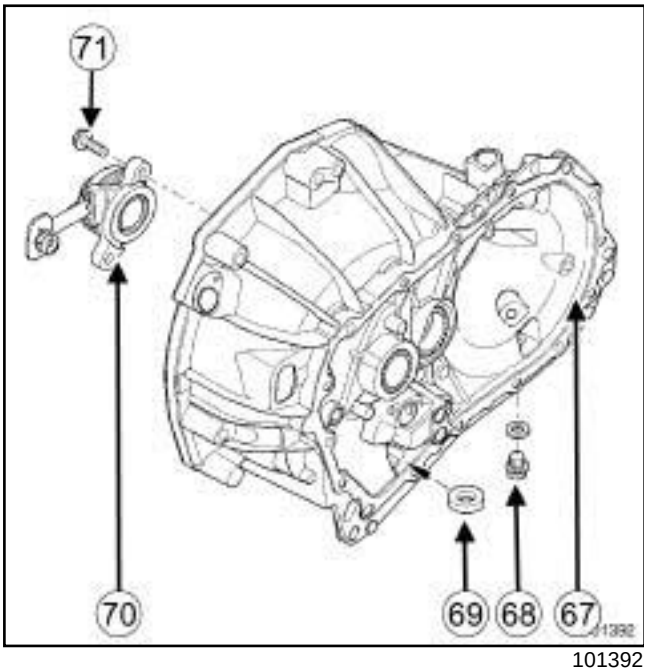

101392

(**67**) Clutch housing

(**68**) Drain plug (25 Nm).

(**69**) Magnet

(**70**) Hydraulic bearing

(**71**) Bearing mounting bolt (21 Nm).

Manual gearbox: List and location of components

JRX, and JR5 – JAX, and JA5

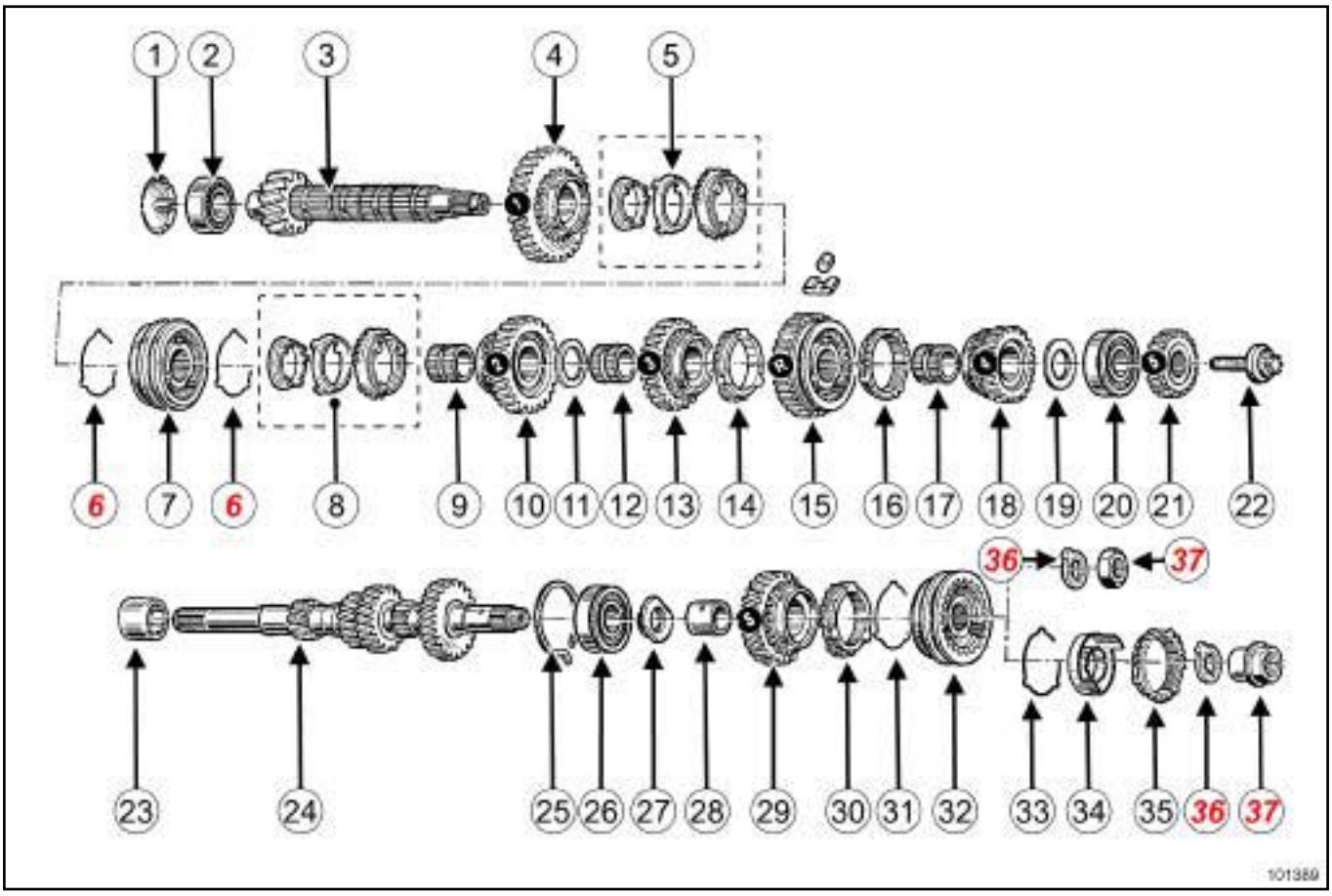

101389

(**1**) Oil deflector
(**2**) Bearing
(**3**) Output shaft
(**4**) First gear sprocket
(**5**) Synchroniser ring
(**6**) Spring
(**7**) First/second selector rod hub
(**8**) Synchroniser ring
(**9**) Gear supporting ring
(**10**) Second gear sprocket
(**11**) Splined washer
(**12**) Gear supporting ring
(**13**) Third-gear sprocket
(**14**) Synchroniser ring
(**15**) Third-fourth selector rod hub
(**16**) Synchroniser ring
(**17**) Gear supporting ring
(**18**) Fourth gear sprocket
(**19**) Adjustment washer
(**20**) Bearing
(**21**) Fifth gear sprocket
(**22**) Output shaft bolt (70 Nm)
(**23**) Bearing guide
(**24**) Input shaft
(**25**) Retaining clip
(**26**) Bearing
(**27**) Lock washer
(**28**) Gear supporting ring
(**29**) Fifth gear sprocket
(**30**) Synchroniser ring
(**31**) Spring
(**32**) Selector rod hub
(**33**) Spring
(**34**) Friction cone
(**35**) Synchroniser ring
(**36**) Washer

JRX, and JR5 – JAX, and JA5

(**37**) Input shaft nut (190 Nm)

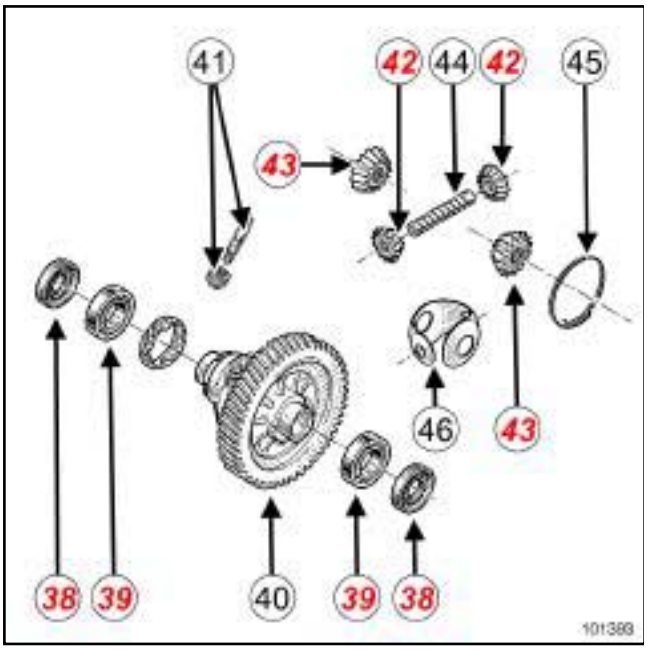

101393

(**38**) Differential seal

(**39**) Bearing

(**40**) Differential

(**41**) Speedometer sprocket (if fitted to the vehicle)

(**42**) Planet wheel

(**43**) Sunwheel

(**44**) Axis

(**45**) Shaft retaining spring

(**46**) Friction shell

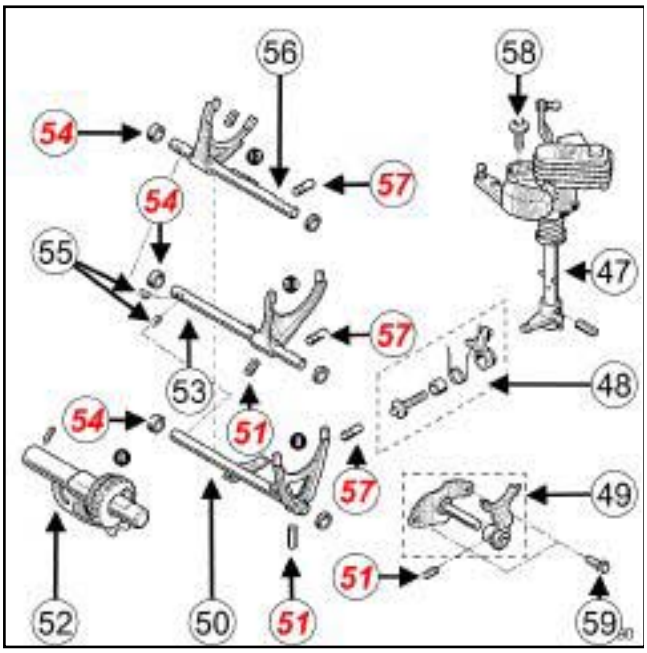

101390

(**47**) Selector shaft

(**48**) Gear shift catch

(**49**) Reverse gear brake fork and shaft

(**50**) Fifth gear fork and shaft

(**51**) Pin

(**52**) Reverse gear shaft

(**53**) Third/fourth gear fork and shaft

(**54**) Ring

(**55**) Lock shaft

(**56**) First/second gear fork and shaft

(**57**) Retaining ball cartridge

(**58**) Selector shaft bolt (20 Nm)

(**59**) Reverse gear fork shaft bolt (25 Nm)

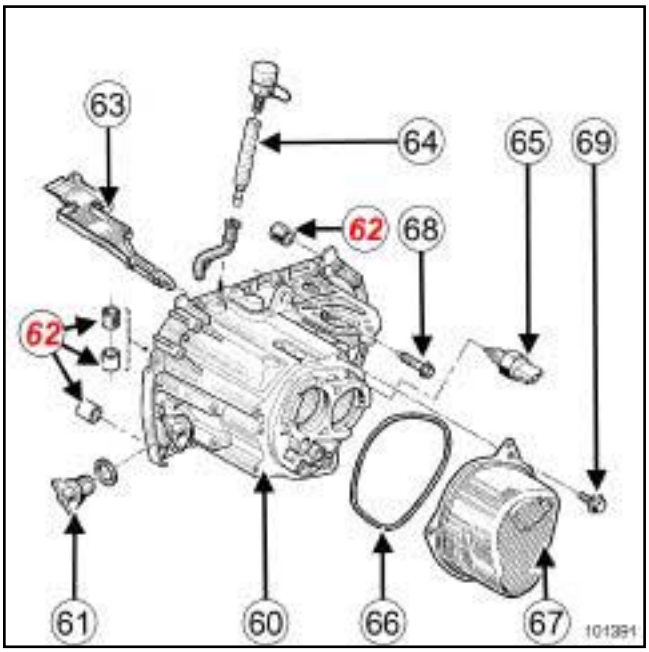

101391

(**60**) Pressure plate housing

(**61**) Filler plug

(**62**) Spacer

(**63**) Oil gutter channel

(**64**) Breather pipe

(**65**) Reverse gear sensor

(**66**) O-ring

(**67**) Fifth gear housing

(**68**) Gearbox bell housing bolt (25 Nm)

(**69**) Fifth gear housing bolt (25 Nm)

JRX, and JR5 – JAX, and JA5

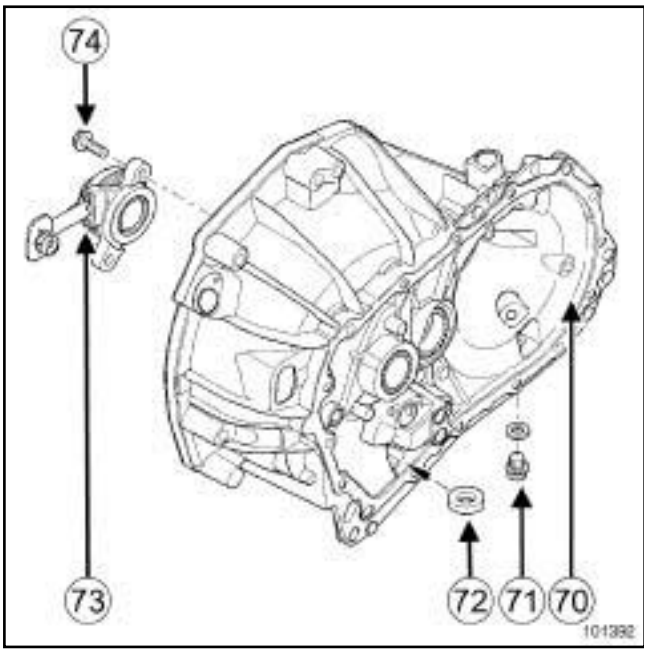

101392

(**70**) Clutch housing

(**71**) Drain plug (25 Nm).

(**72**) Magnet

(**73**) Hydraulic bearing

(**74**) Bearing mounting bolt (21 Nm).

JAX – JHX – JRX, and JR5

Special tooling required		
Bvi. 1581	JHX – JRX	Support for all types of J gearboxes.
Bvi. 31-01	JHX – JRX	Set of 3 roll pin drifts (5mm diameter roll pins).
Bvi. 1170	JHX – JRX	Extractor for 5th speed gear hub.
Bvi. 22-01	JHX – JRX	Extractor body without cover.
Bvi. 1000-01	JAX – JRX – JHX	5th fixed gear extractor.

REMOVAL

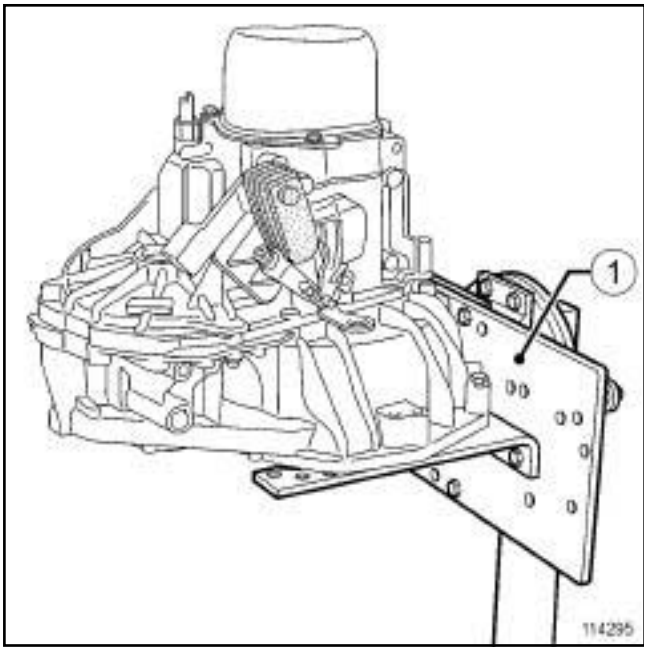

114295

Fit the support plate **(Bvi. 1581)** (**1**) on a Desvil stand.

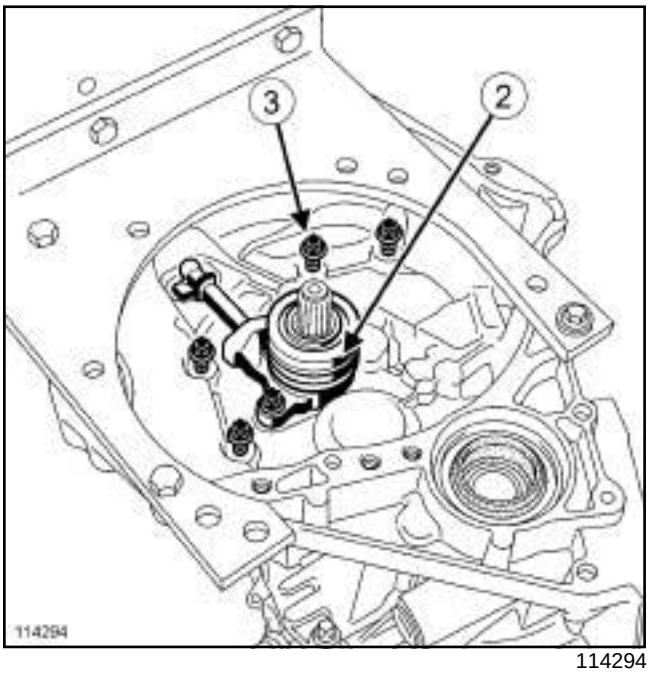

114294

Remove:

- the clutch slave cylinder (**2**) ,
- the internal gear box bell housing bolts (**3**) ,

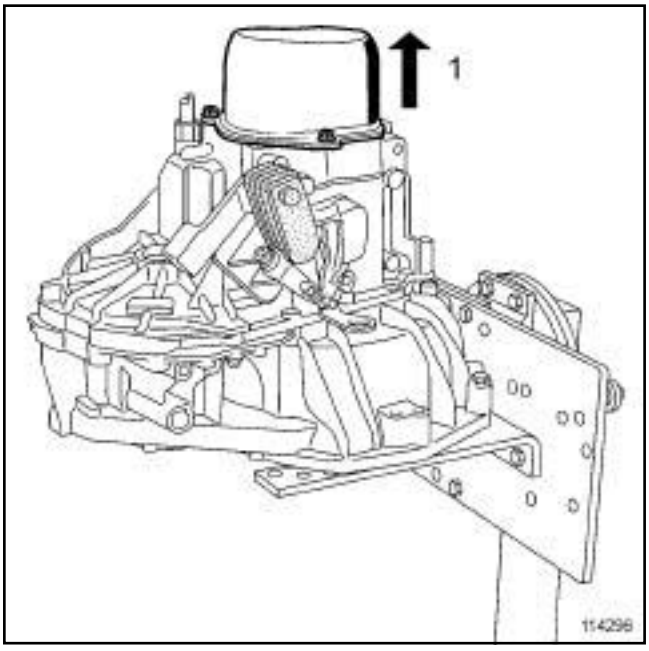

114296

Remove the fifth gear housing along the horizontal axis of the gearbox ⇨ (**1**) , because it comprises a lubrication channel located in the bore of the primary shaft.

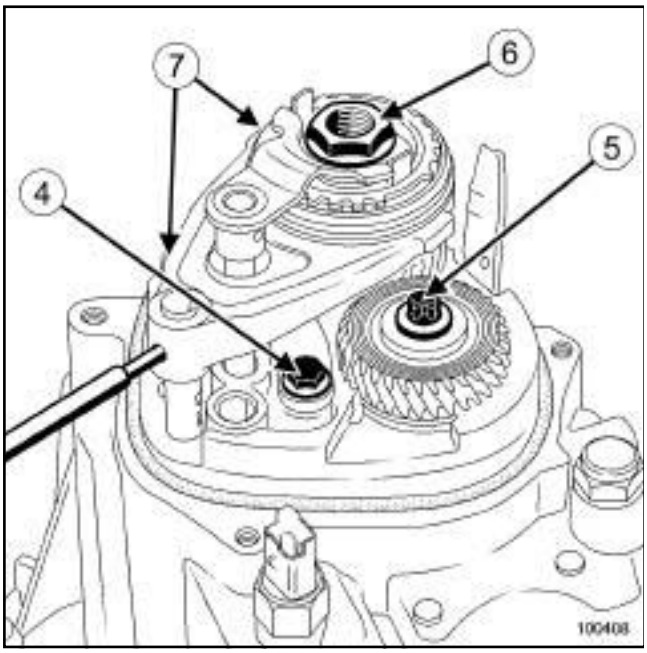

100408

Remove the mounting bolts (**4**) from the mounting of the reversing brake fork (where fitted).

Drive out the pin of the fifth gear fork using the **(Bvi. 31-01)** .

Change into third gear using the gear lever.

Change into fifth gear by sliding the fifth gear fork along its axis.

Remove:

- the output shaft bolt (**5**) ,
- the input shaft nut (**6**)
- the fifth gear fork and selector rod assembly (**7**)

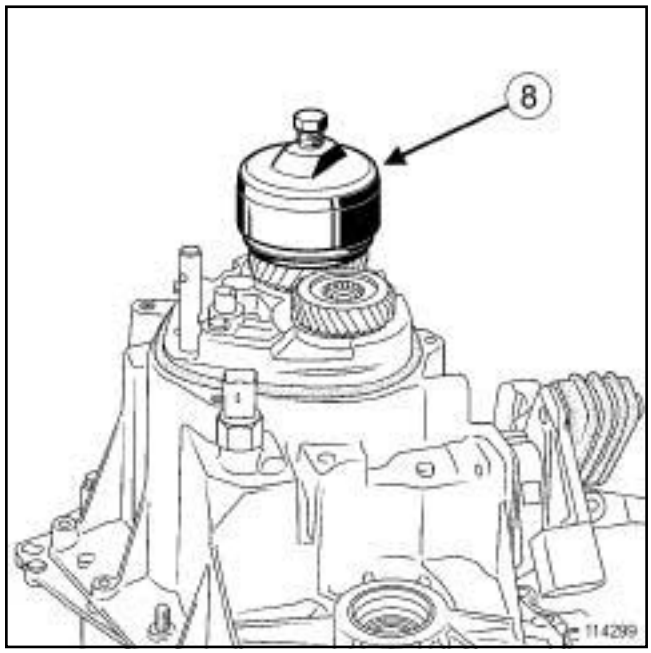

114299

Position the sliding assembly of the **(Bvi. 1170)** (**8**)

Rotate the tool so that the splines are opposite those of the input shaft hub.

Remove the fifth gear hub.

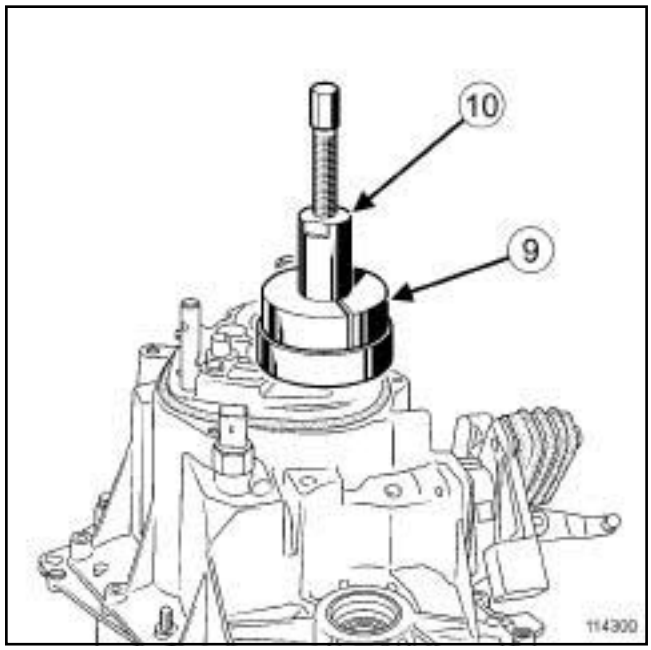

114300

Remove the fifth fixed gear using the **(Bvi. 22-01)** (**10**) and the **(Bvi. 1000-01)** (**9**) .

Remove the gearbox bell housing bolts.

JAX – JHX – JRX, and JR5

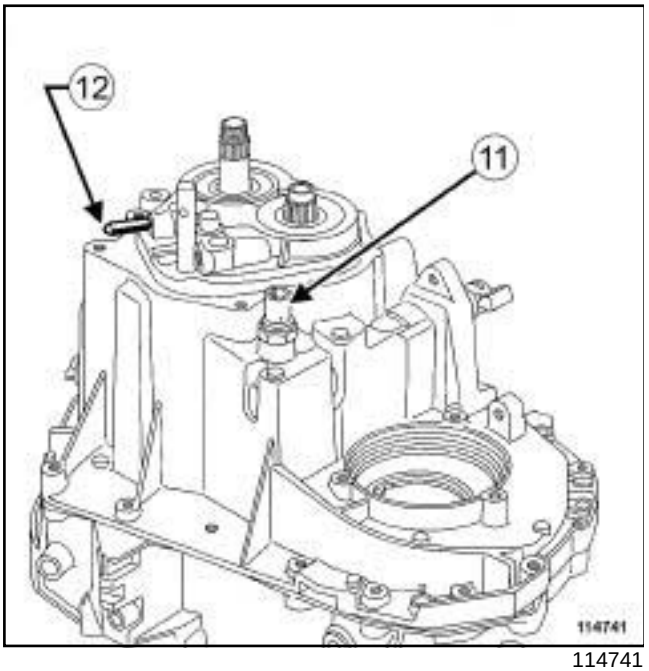

114741

Remove the reverse gear switch (**11**)

Remove the retaining pin of the reverse gear shaft (**12**) (if fitted).

Engage third gear.

Lift and remove the mechanism housing.

JAX – JHX – JRX

Special tooling required		
Bvi. 949	JHX – JRX	Tool for removing/refitting Mecanindus pins for selector fork shafts

CLOSED DIFFERENTIAL GEARBOX

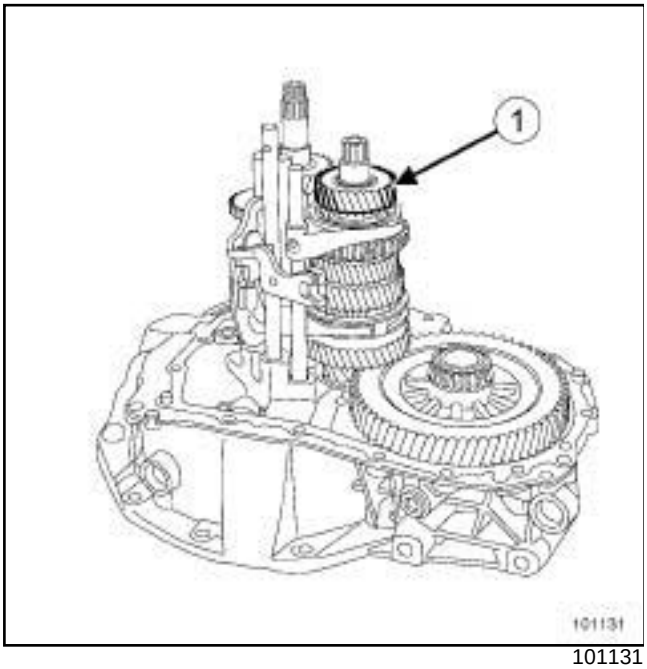

101131

Remove the fourth-gear sprocket (**1**) .

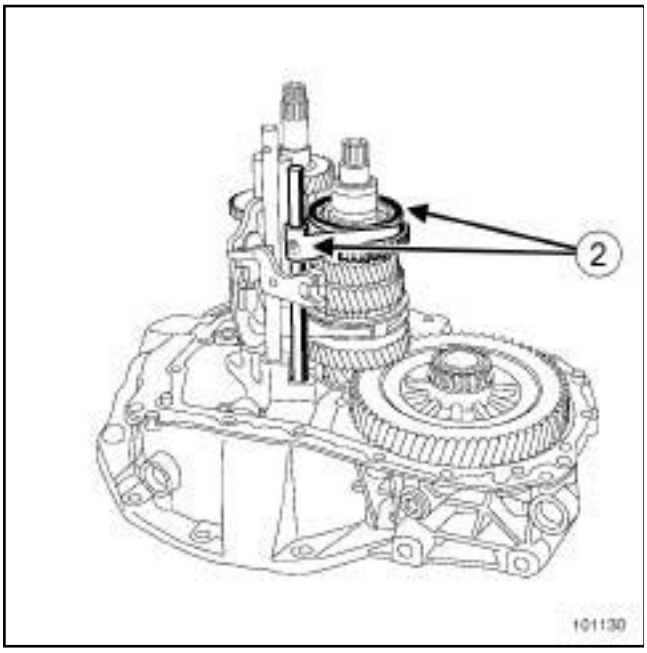

101130

Remove the third/fourth gear "shaft/fork and selector rod" assembly while gently lifting the primary shaft (**2**)

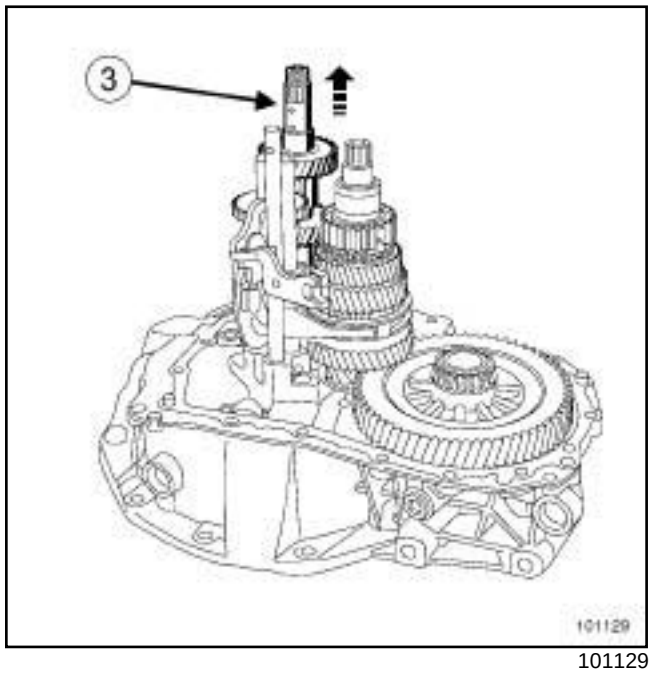

101129

Remove the input shaft (**3**) .

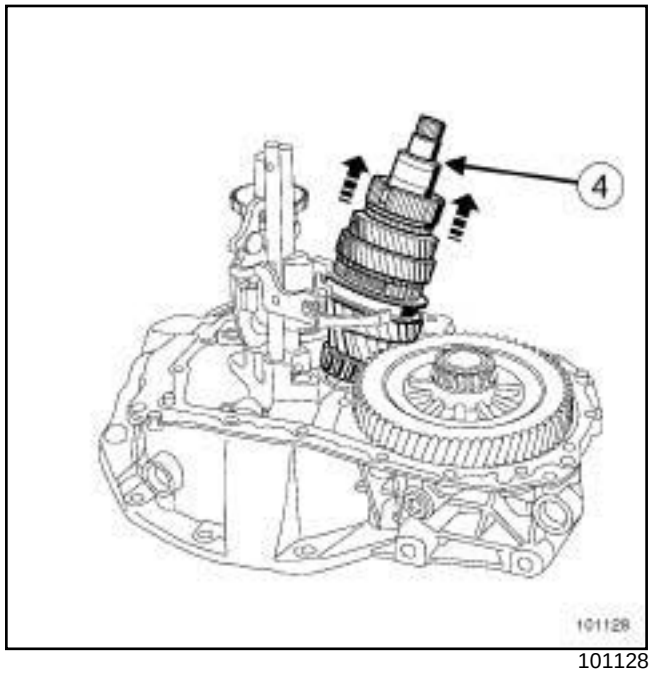

101128

Remove the output shaft (**4**) t.

JAX – JHX – JRX

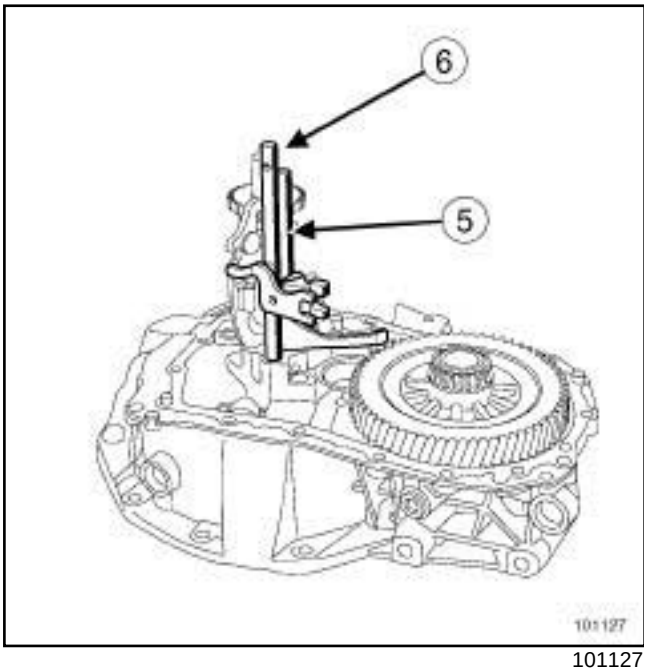

101127

Remove:

- the first/second gear shaft and fork (**5**) ,
- the fifth gear shaft (**6**) .

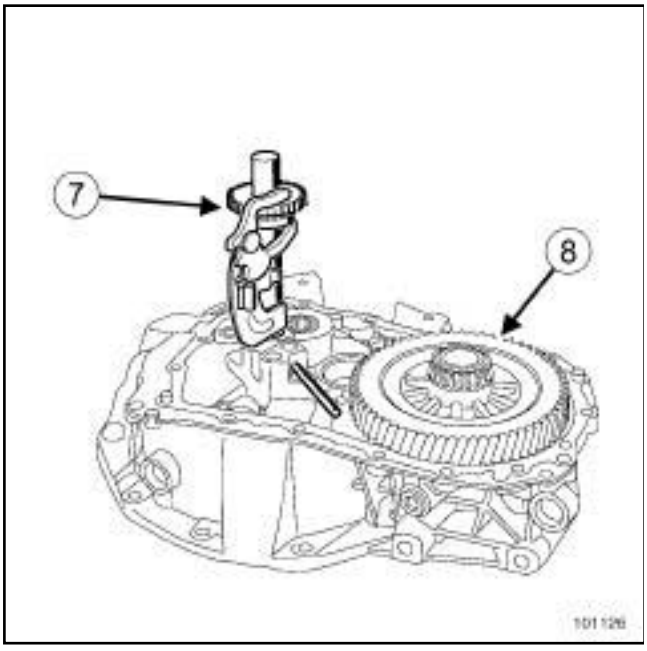

101126

Remove the pin from the reverse gear assembly.

Remove:

- the reverse gear assembly (**7**)
- the differential (**8**) .

OPEN DIFFERENTIAL GEARBOX

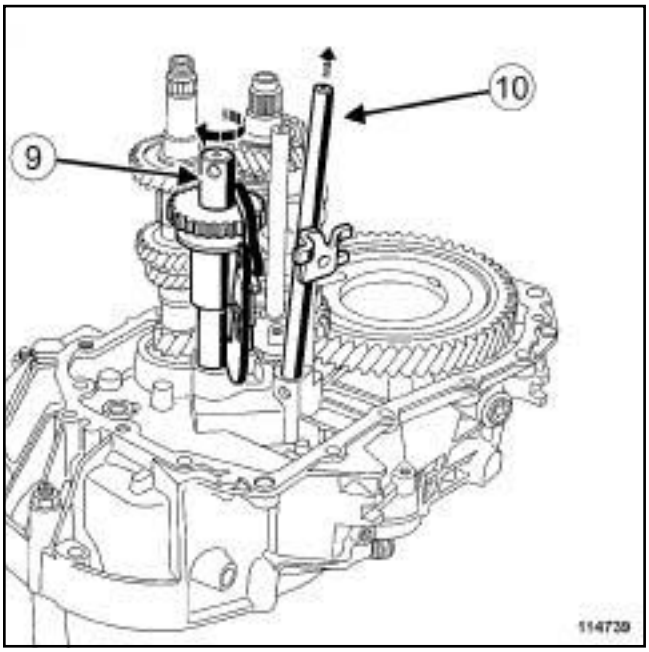

114739

Rotate the reverse gear shaft to the left (**9**) .

Remove the fifth gear shaft (**10**) .

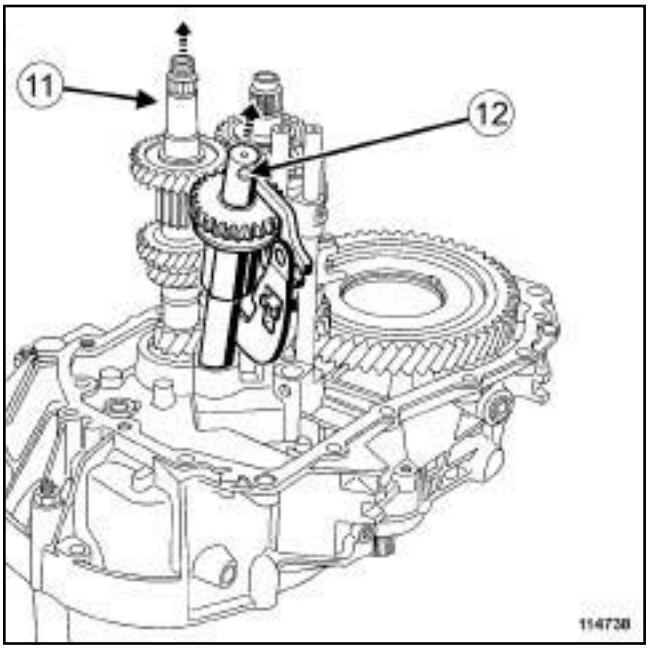

114738

Lift the input shaft slightly (**11**) .

Remove the reverse gear shaft (**12**) .

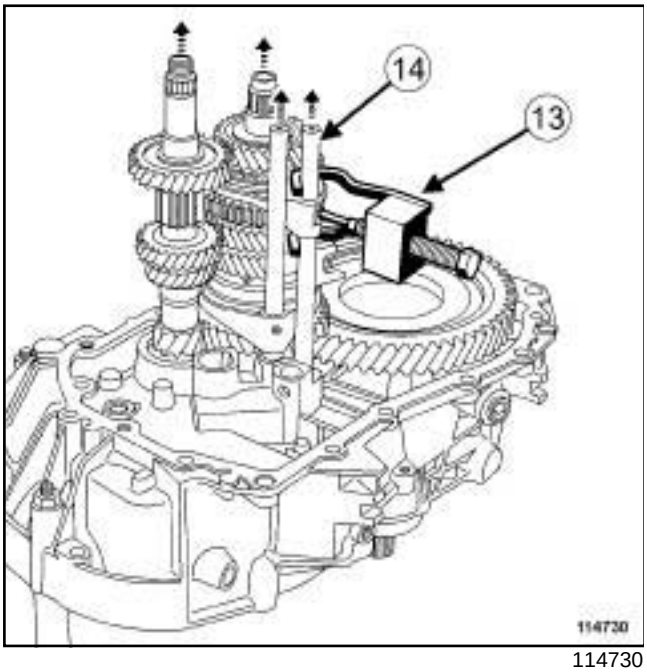

114730

Remove the roll pin from the third/fourth gear using the **(Bvi. 949)** (**13**) .

Remove the third-forth gear "shaft and fork" assembly (**14**) .

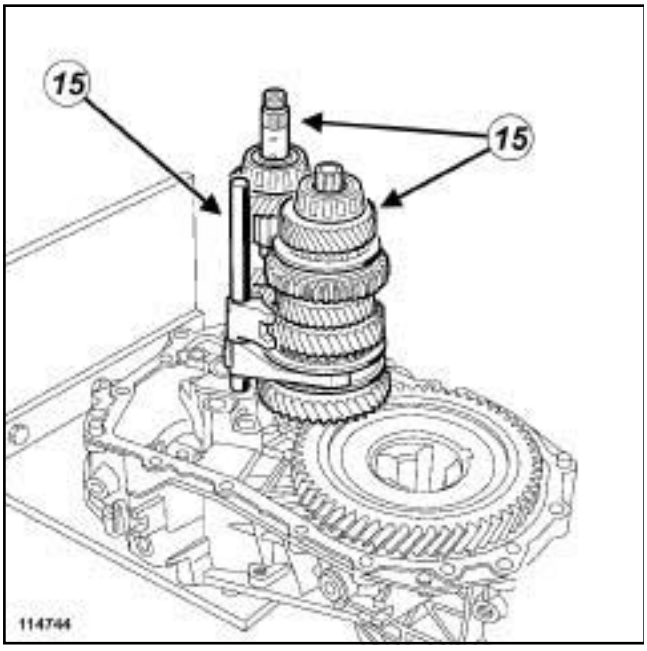

114744

Simultaneously remove the first/second gear "input shaft - output shaft - fork"assembly (**15**) .

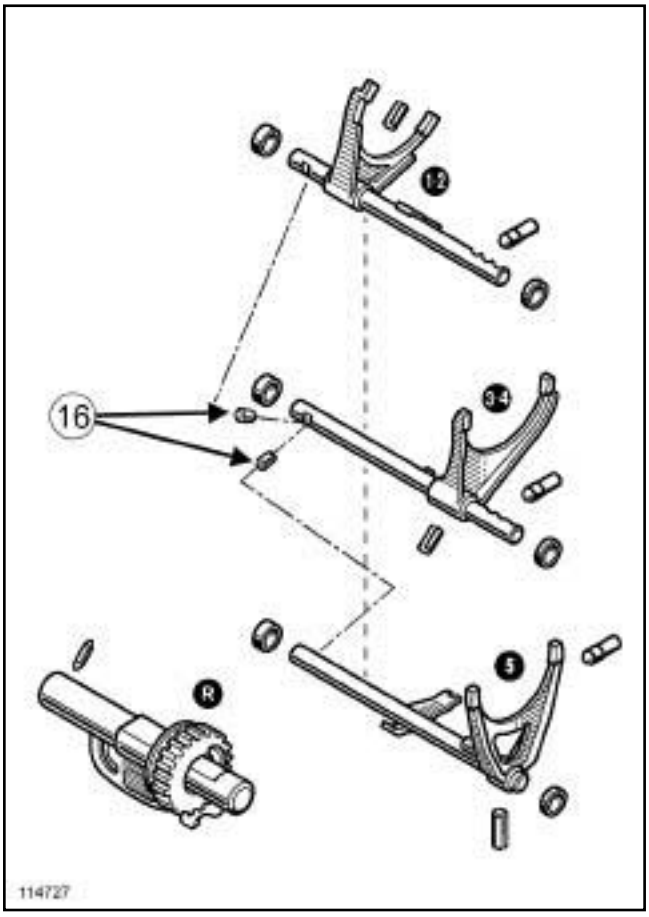

114727

Do not forget to retrieve the interlock pins (**16**) .

JAX, and JA3 – JRX, and JR5 – JHX

Special tooling required		
Bvi. 1161	JHX – JRX	Steel plate to attach DTI gauge and 0.6 and 1.6 standard wrench.
Bvi. 1527	JHX – JRX	Plate for adjusting clearance of input and output shafts.

Tightening torques ▽	
the gearbox bell housing bolts	**25 Nm**
gearbox bell housing bolts	**25 Nm**

I - ADJUSTMENT OF THE PRE-TENSION OF THE TAPERED BEARINGS OF THE OUTPUT SHAFT

Note:

This adjustment only needs to be carried out when replacing the housings or output shaft.

Only put the output shaft in the clutch housing together with its bearings and the pretensioning washer of the **(Bvi. 1161) 1.60 mm in size** (large outer diameter

Position the mechanism housing.

Position and tighten to torque **the gearbox bell housing bolts (25 Nm)**

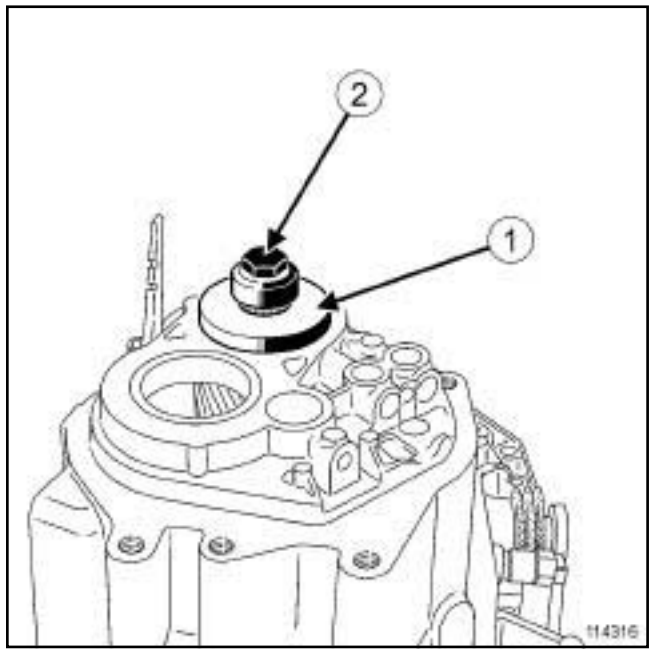

114316

Fit:

- the backplate **(Bvi. 1527)** (**1**) .

- the bolt (**2**) .

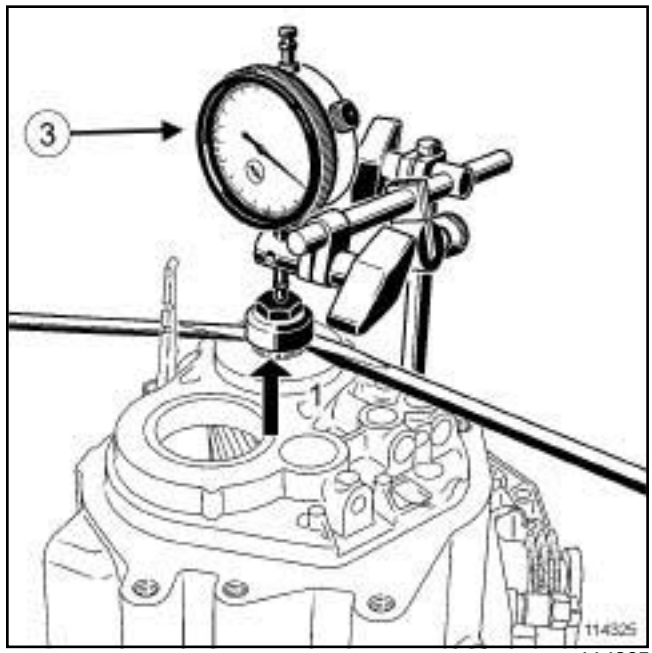

114325

Fit the backplate of tool **(Bvi. 1161)** secured with two bolts and fit a dial gauge (**3**) .

Adjustment:

- Rotate the output shaft several times to fit the bearings.

- Set the dial gauge to zero.

JAX, and JA3 – JRX, and JR5 – JHX

- Pull the output shaft upwards ⇨ (**1**) using two screwdrivers as levers.
- Take a reading from the dial gauge.
- Repeat this operation three times.
- Calculate the average of the readings.

CALCULATE THE THICKNESS OF THE BEARINGS' PRETENSIONING WASHER

Prescribed value + value of the pre-setting washer + average of the readings on the dial gauge = value of the pretensioning washer.

example: (value in mm)

0.26 + 1.60 + 0.49 = 2.35

> Note:
>
> A set of washers with a total thickness ranging from **2.15 mm** to **2.43 mm** in gradations of **0.04 mm** is supplied as a spare part.

II - ADJUSTMENT OF THE PRE-TENSION OF THE TAPERED BEARINGS OF THE INPUT SHAFT

> Note:
>
> This adjustment only needs to be carried out when replacing the housings or input shaft.

Only put the input shaft in the clutch housing together with its bearings and the pre-setting washer of the **(Bvi. 1161) 0.62 mm in size** (small outer diameter

Position the mechanism housing.

Position and tighten to torque the **gearbox bell housing bolts (25 Nm)**

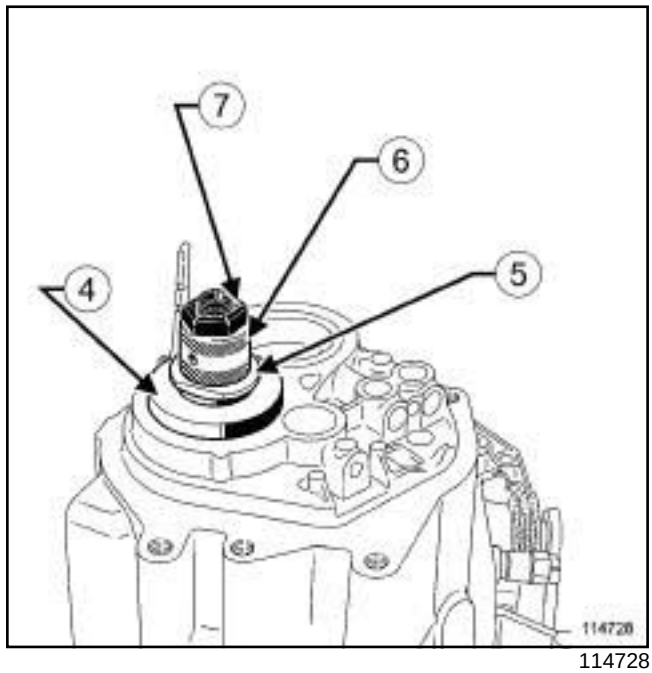

114728

Fit:

- the backplate **(Bvi. 1527)** (**4**) ,
- the lock washer (**5**) ,
- the gear supporting ring (**6**)
- the fully tightened nut (**7**) .

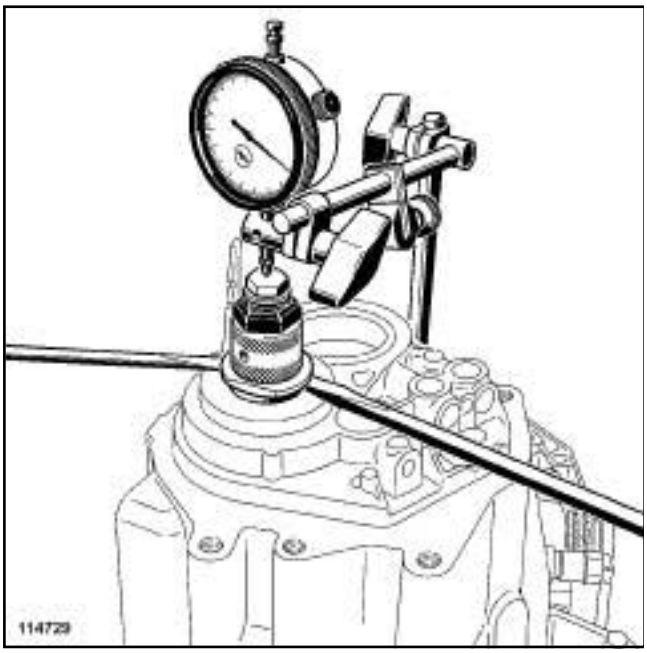

114729

Fit the support plate of the **(Bvi. 1161)** secured with two bolts and fit a dial gauge with a magnetic stand.

Rotate the input shaft several times to fit the bearings.

Set the dial gauge to zero.

Pull the input shaft upwards using two screwdrivers as levers.

Take a reading from the dial gauge.

Repeat three times and calculate the average of three readings.

CALCULATE THE THICKNESS OF THE BEARINGS' PRETENSIONING WASHER

Prescribed value + value of the pretensioning washer + average of the readings on the dial gauge = value of the pretensioning washer.

Example: (value in mm)

0 + 0.62 + 0.48 = 1.10

Note:

A set of washers with a total thickness ranging from **0.86 mm** to **1.30 mm** in gradations of **0.04 mm** is supplied as a spare part.

JAX, and JA3 – JHX, and JH3

REMOVAL

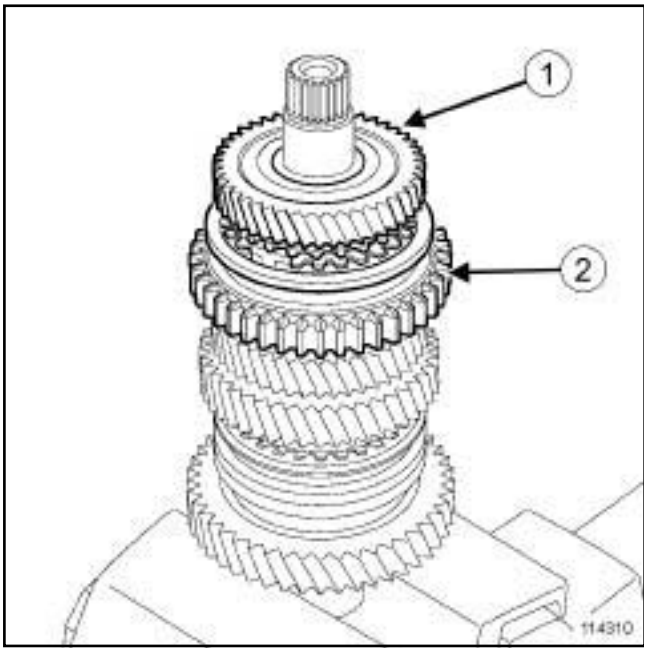

114310

Mount the output shaft in a vice fitted with jaws.

Remove:

- the fourth gear sprocket (**1**)
- the third/fourth gear selector rod hub (**2**) .

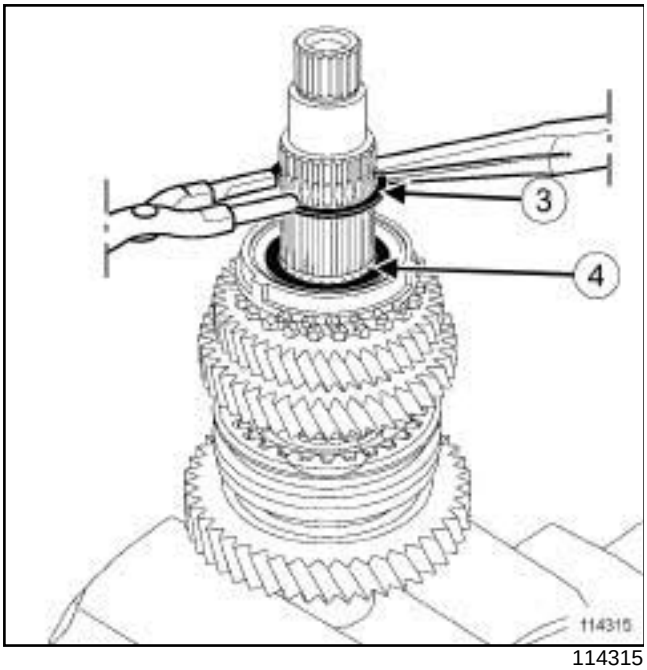

114315

Remove:

- the lock ring (**3**) and fit a new one in every case,
- the splined washer (**4**) .

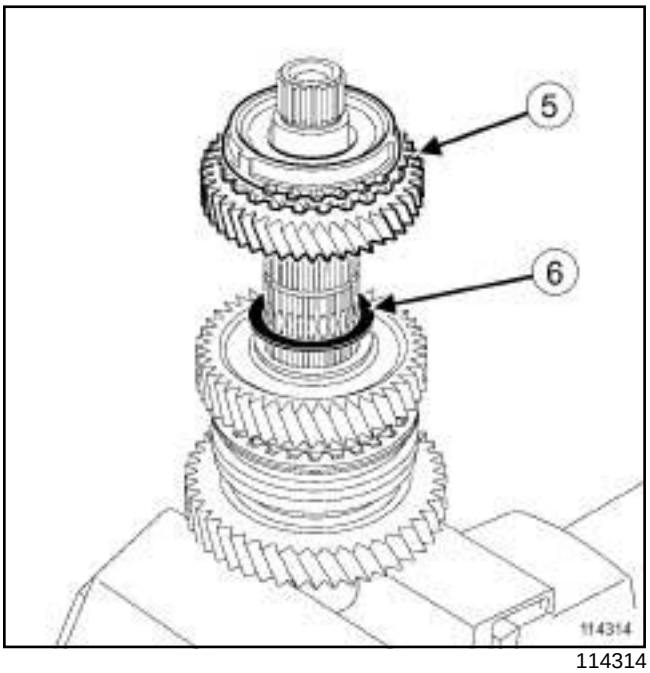

114314

Remove:

- the third gear sprocket (**5**)
- the splined washer (**6**) .

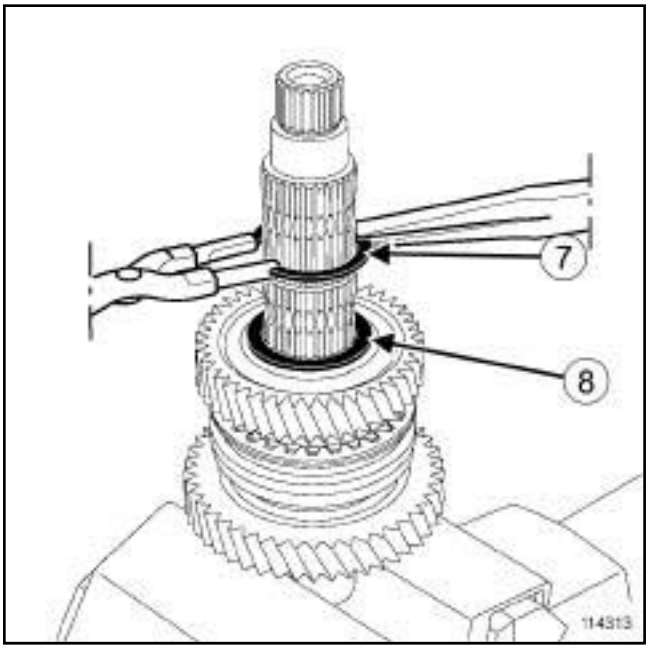

114313

Remove:

- the lock ring (**7**) and fit a new one in every case,
- the splined washer (**8**) .

JAX, and JA3 – JHX, and JH3

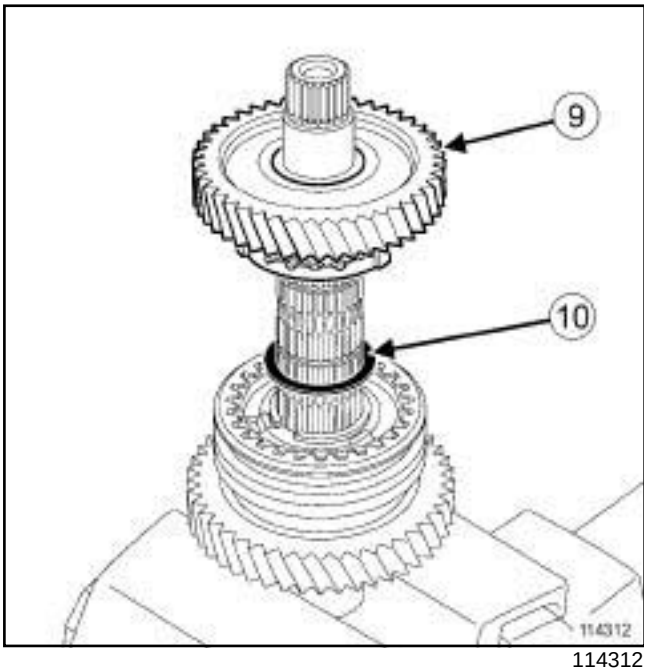

114312

Remove:

- the second gear sprocket (**9**)
- the splined washer (**10**) .

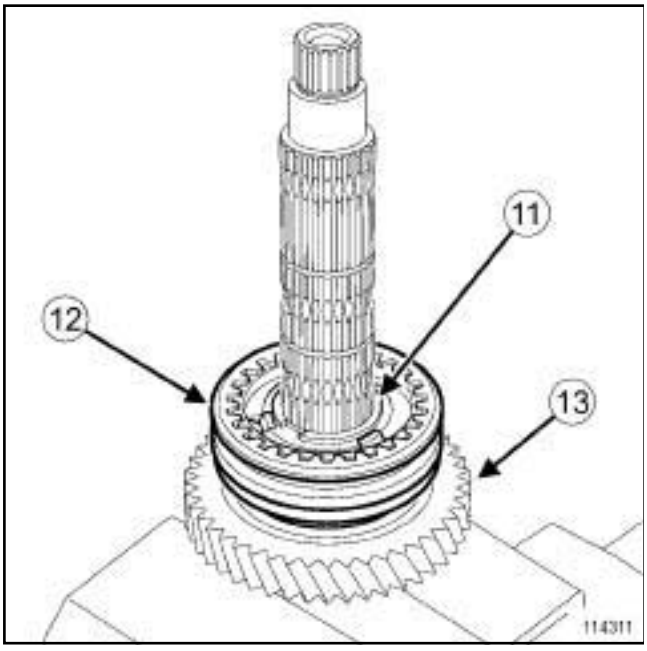

114311

Remove:

- the lock ring (**11**) and fit a new one in every case,
- the first/second gear selector rod hub (**12**) .
- the first gear sprocket (**13**) .

REFITTING

Proceed in the reverse order to remove.

Note:

The lock rings must be systematically replaced.

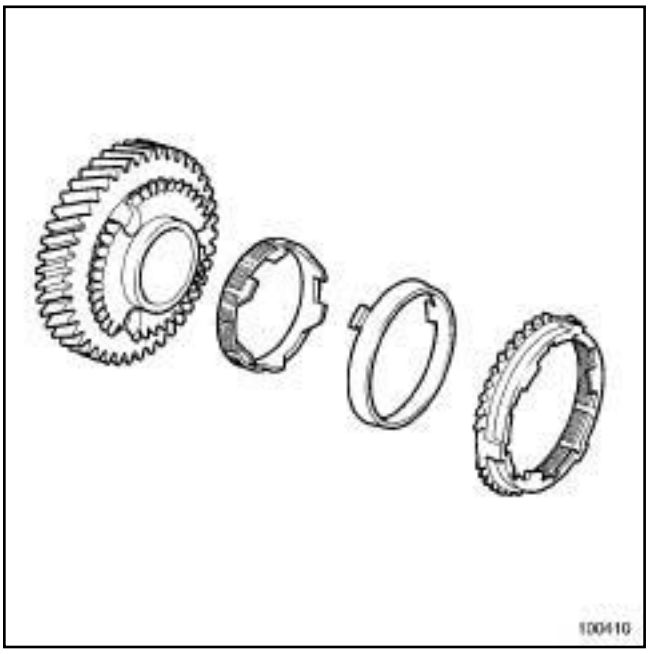

100410

Oil the synchroniser rings.

WARNING

Make sure that the notches on the double cone synchroniser are correctly positioned.

JAX, and JA5 – JRX, and JR5

REMOVAL

REMOVAL OF THE GEAR ASSEMBLY

The rings supporting the second, third and fourth gears are fitted tightened. These shall be systematically replaced during refitting.

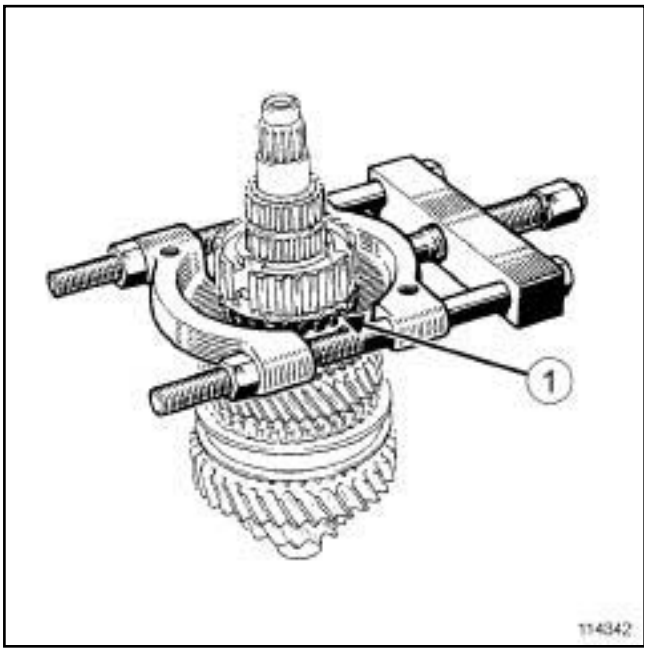

114342

Remove:

- the bearing,
- the setting washer,
- the fourth gear sprocket
- the third-fourth gear selector rod assembly,
- the "gear supporting ring, hub and third gear sprocket" assembly using an extractor and a press and lifting it from underneath the claw teeth of the third gear sprocket (**1**) .

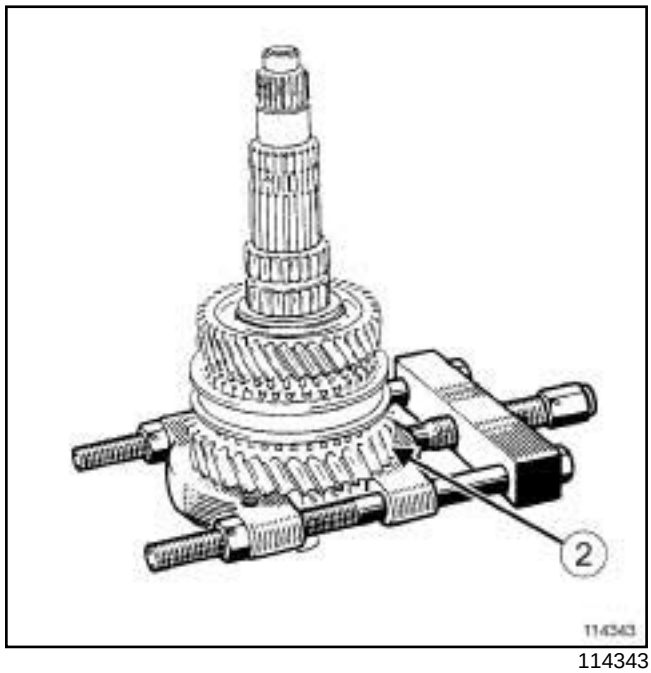

114343

Remove the "gear supporting ring, first and second gear sprockets - hub - selector rod" assembly using an extractor and a press and lifting it from underneath the first gear sprocket (**2**) .

REFITTING

REFITTING THE GEAR ASSEMBLY

When reassembling, use a hot plate set at **150˚C** .

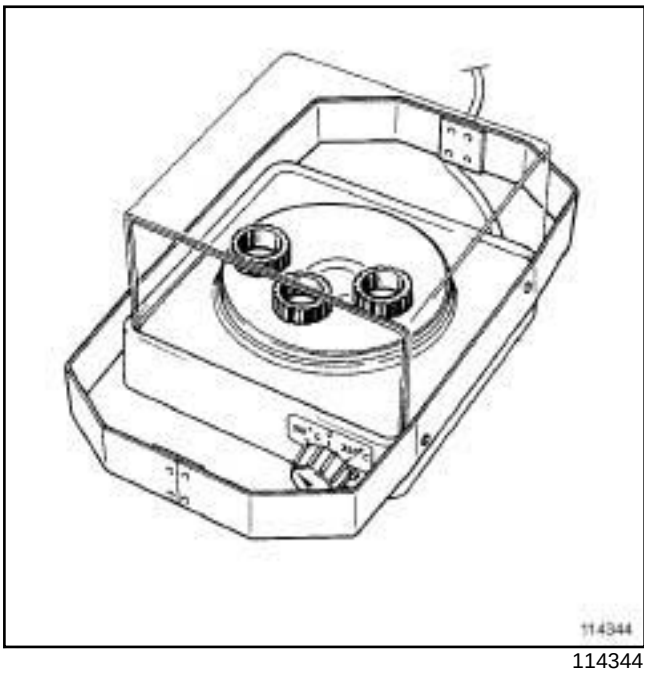

114344

Place the new sprocket rings on the hot plate.

Heat the sprocket rings for **15 min** , with the thermostat set at **150°C** .

Proceed in the reverse order to removal.

Refit the new sprocket rings using a tube with an internal diameter of **33 mm** until they are resting on the hub.

Oil the synchroniser rings.

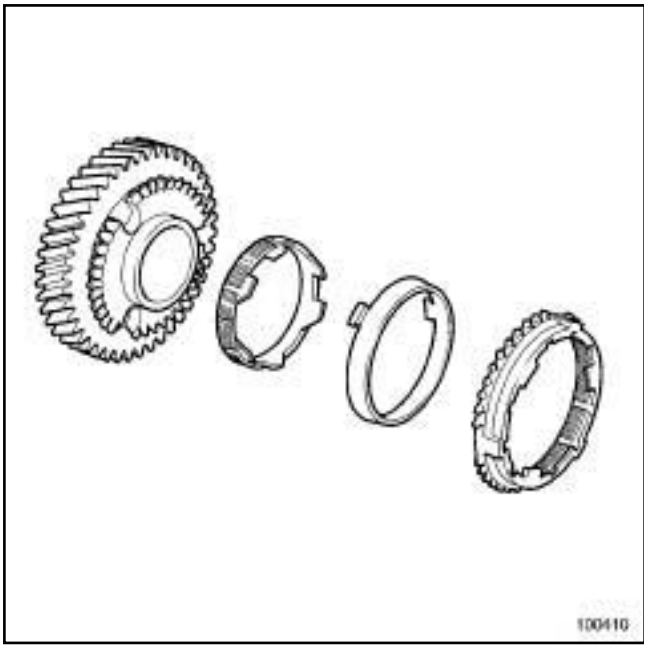

100410

Make sure that the notches on the double cone synchroniser are correctly positioned.

JHX – JRX, and JR5

Special tooling required		
Bvi. 1057	JHX – JRX	Differential locking tool
Bvi. 946	JHX – JRX	Mandrel for fitting locking spring ring on sunwheel.

Tightening torques ▽	
differential mounting nut	**130 Nm**

REMOVAL

JH type with open differential

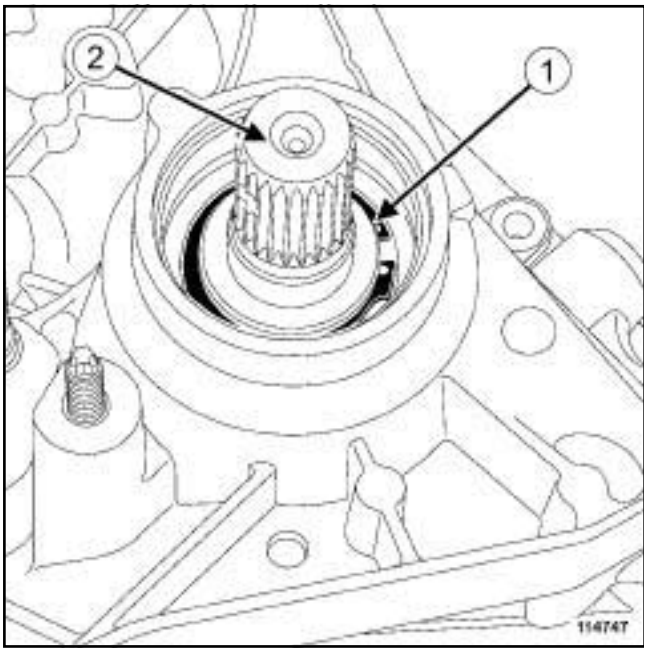

114747

Removal of lock ring:

- fit a shim underneath the crownwheel,
- push the housing using a press to release the lock ring,
- remove the lock ring (**1**) .

Remove the differential using the sunwheel as a support (**2**) .

JR type with open differential

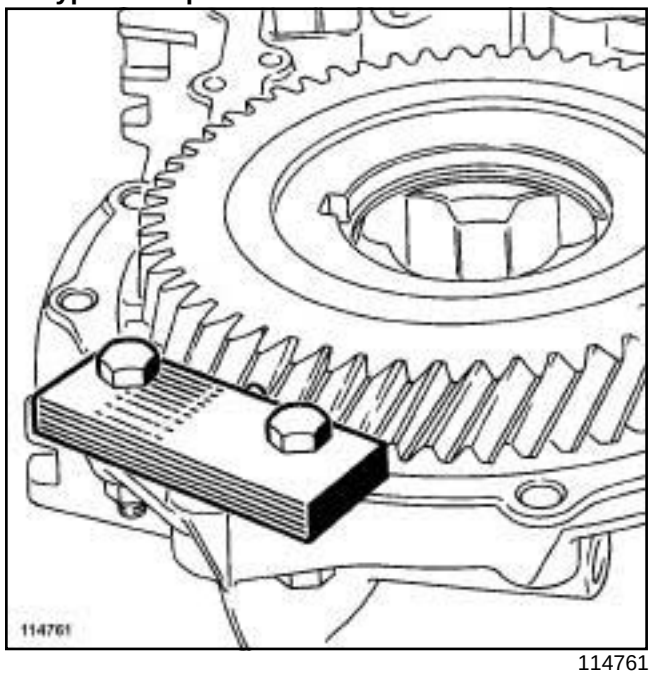

114761

Lock the differential using the **(Bvi. 1057)** .

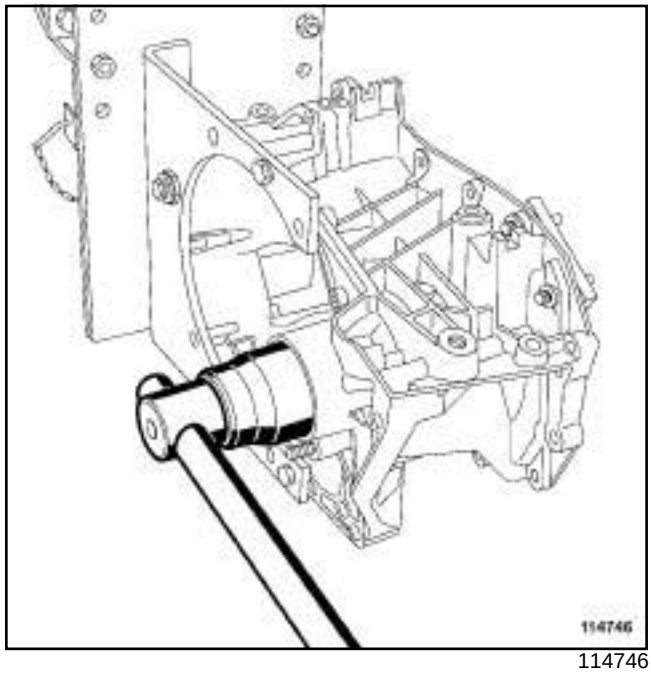

114746

Remove:

- the mounting nut,
- the differential using the sunwheel as a support.

JHX – JRX, and JR5

REFITTING

JH type with open differential

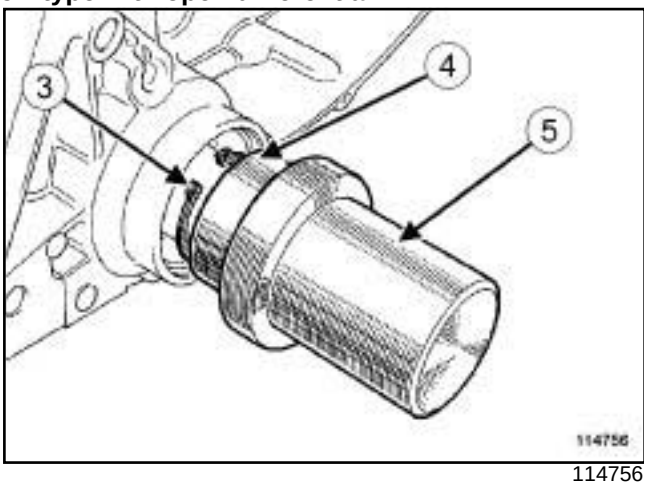

114756

Refitting the lock ring:

- Fit a shim underneath the differential,
- Put the lock ring (**3**) on the shoulder (**4**) of the **(Bvi. 946)** (**5**) ,
- Put the **(Bvi. 946)** (**5**) on the shoulder (**4**) ,
- Push the assembly using the press until the lock ring falls into place.

JR type with open differential

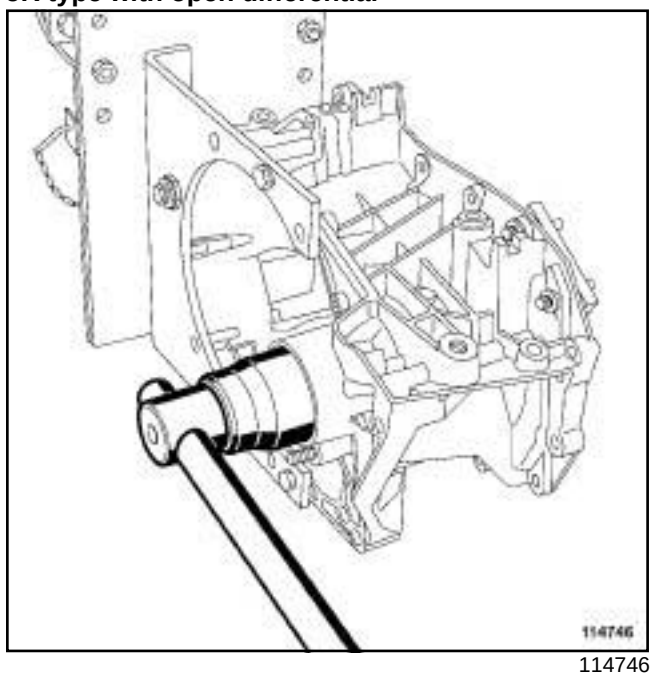

114746

Refit the differential in the housing.

Fit the (lightly oiled) bearing.

Fit the pretensioning washer

Fit the mounting nut and pre-tighten to **20 Nm**

Rotate the differential several times to position the bearings.

Refit the **(Bvi. 1057)** .

Tighten to torque the **differential mounting nut (130 Nm)**

Remove the **(Bvi. 1057)** and rotate the differential several times.

JHX – JRX, and JR5

Adjusting the pretensioning of the bearings

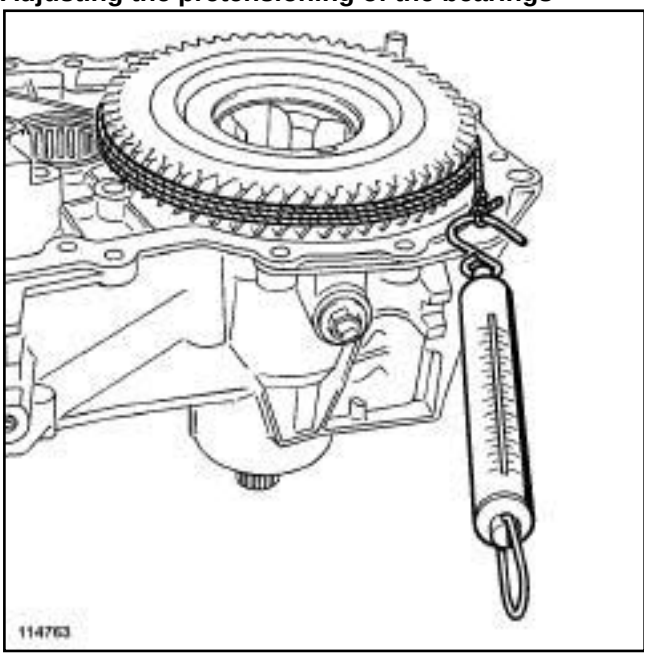

114763

The differential must rotate under a load of between:

- **5 Nm and 20 Nm if bearings are being reused,**
- **16 Nm and 32 Nm if bearings are new.** .

If the adjustment is not correct, determine the thickness of the shim, bearing in mind that pre-tension increases by **7 - 8 Nm** with a reduction in thickness of the setting washer of **0.05 mm** and vice versa.

JRX, and JR5 – JAX – JHX

Special tooling required		
Bvi. 1554	JRX	Tool kit for repairing JC7 gearboxes.
Bvi. 1059	JHX – JRX	Differential bearing bushes fitting kit

REMOVAL OF CLOSED DIFFERENTIAL GEARBOX BEARINGS

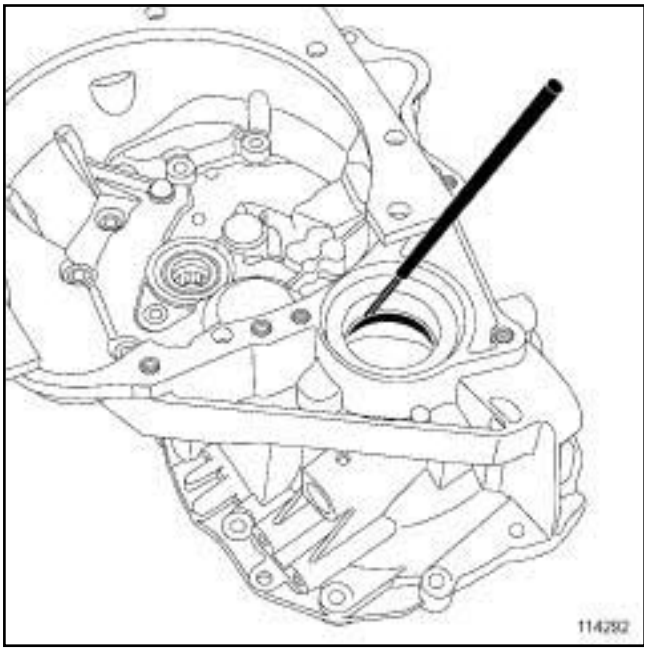

114292

Remove the bearing races using a roll pin punch.

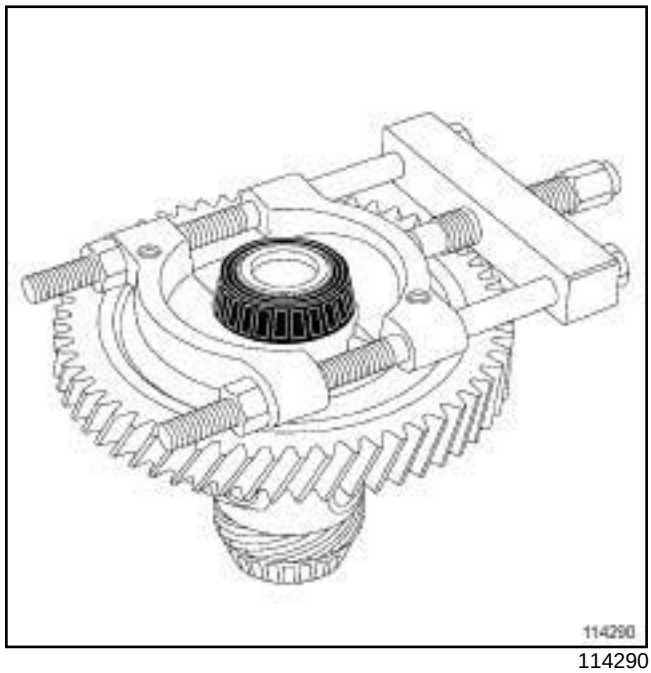

114290

Remove the bearings using an extractor.

REFITTING OF CLOSED DIFFERENTIAL GEARBOX BEARINGS

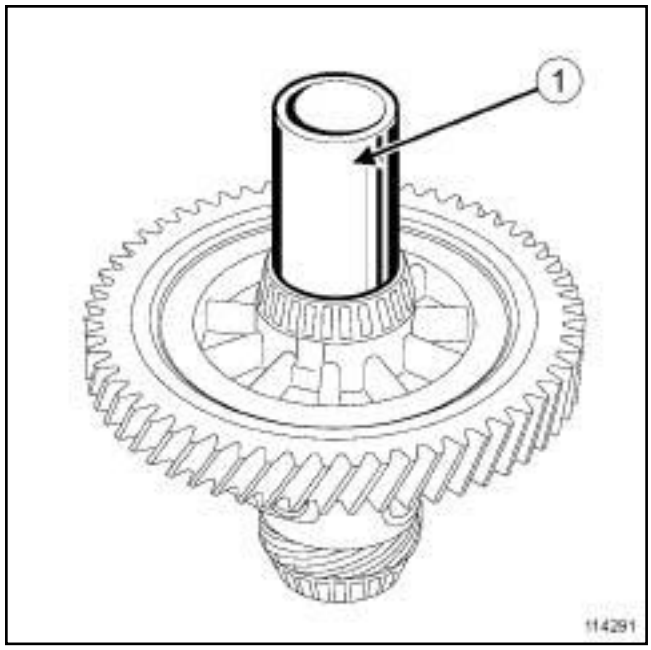

114291

Refit the bearing using a tube with a diameter of **40 mm** (**1**) .

JRX, and JR5 – JAX – JHX

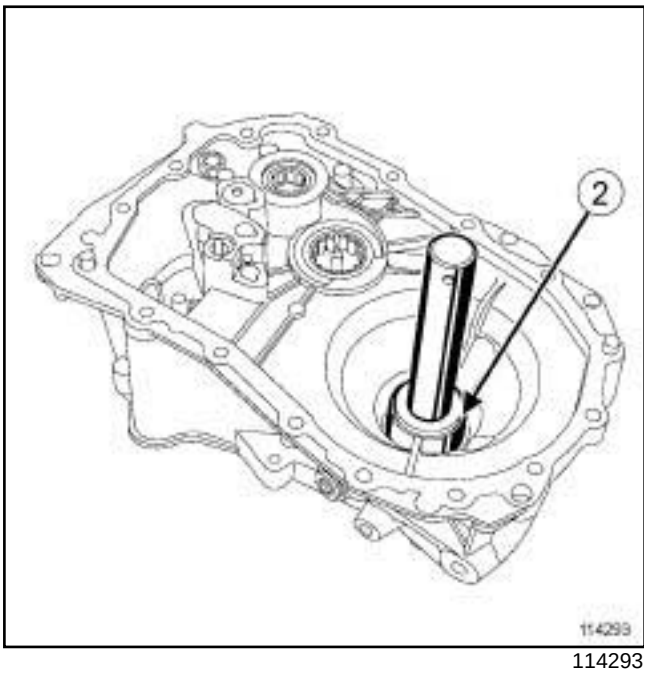

114293

Refit the bearing races using tools C and F in the kit **(Bvi. 1554)** (**2**) .

REMOVAL OF OPEN DIFFERENTIAL GEARBOX BEARINGS

JH type on crownwheel side

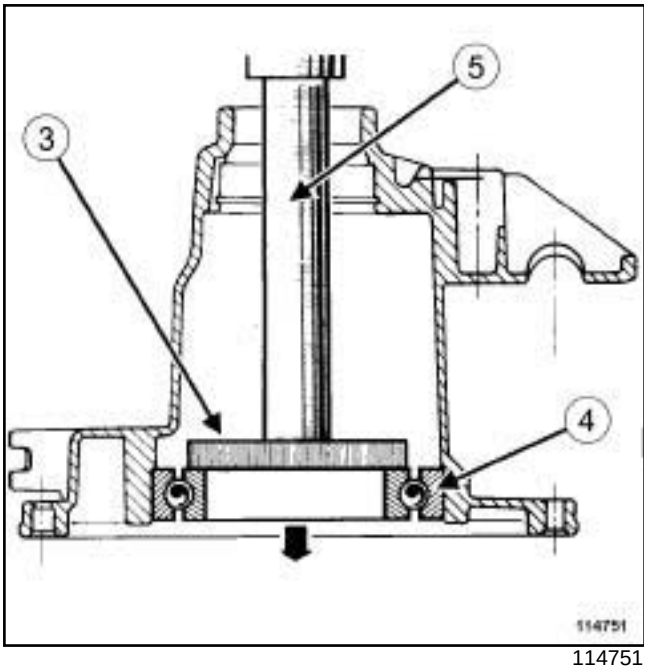

114751

Insert a small bar (**3**) in the casing and place it flat on the bearing (**4**) .

Extract the bearing (**4**) using the press and a tube (**5**) .

JH type on sunwheel side

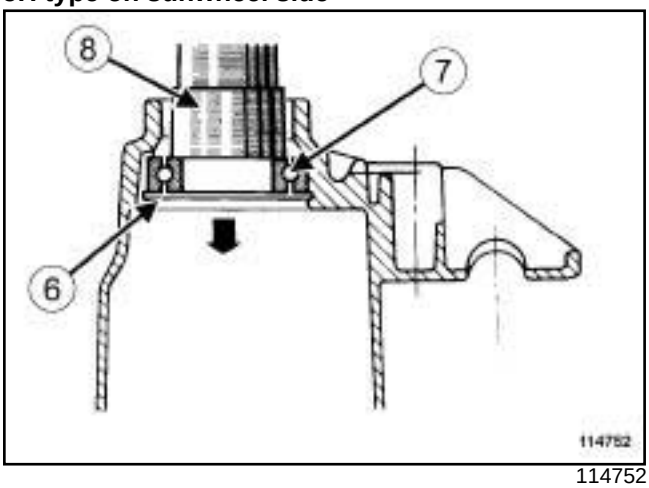

114752

Remove the bearing's lock ring (**6**) .

Withdraw the bearing (**7**) using the press and tube of **50 mm** (**8**) through the inside of the housing.

JR type on crownwheel side

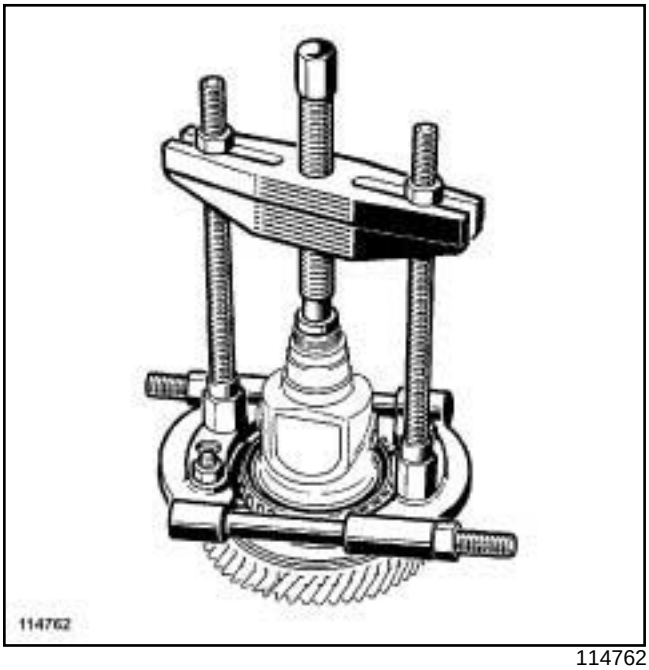

114762

Remove the bearing with an extractor.

Withdraw the bearing cups though the inside of the housing using a roll pin punch.

JRX, and JR5 – JAX – JHX

REFITTING OPEN DIFFERENTIAL GEARBOX BEARINGS

JH type on crownwheel side

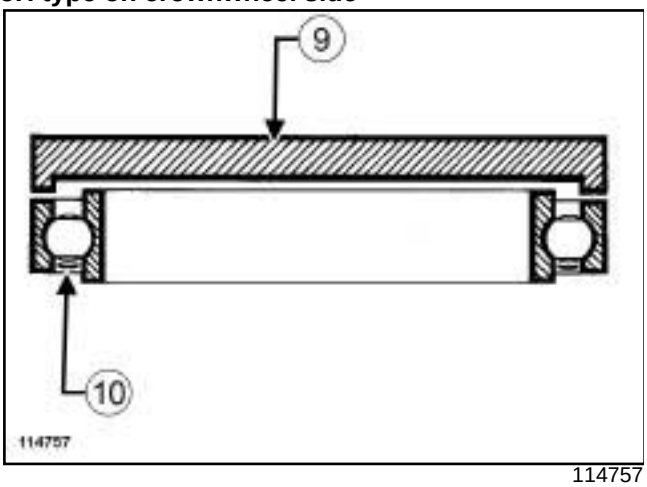

114757

Refit the bearing using the press and the **(Bvi. 1059)** (**9**) using the external bearing bush as a support

> Note:
>
> The bearing's sealing race (**10**) must be facing the side opposite the crownwheel

JH type on sunwheel side

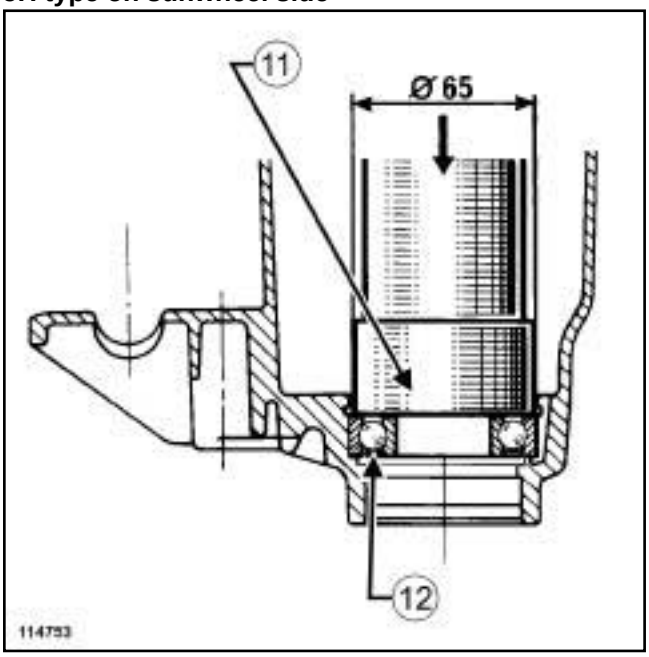

114753

Refit the bearing using a tube with a diameter of **65 mm** (**11**) .

> Note:
>
> The bearing's sealing race (**12**) must be facing the side opposite the crownwheel

Refit a **new** lock ring on the bearing.

JRX, and JR5 – JAX – JHX

JR type on crownwheel side

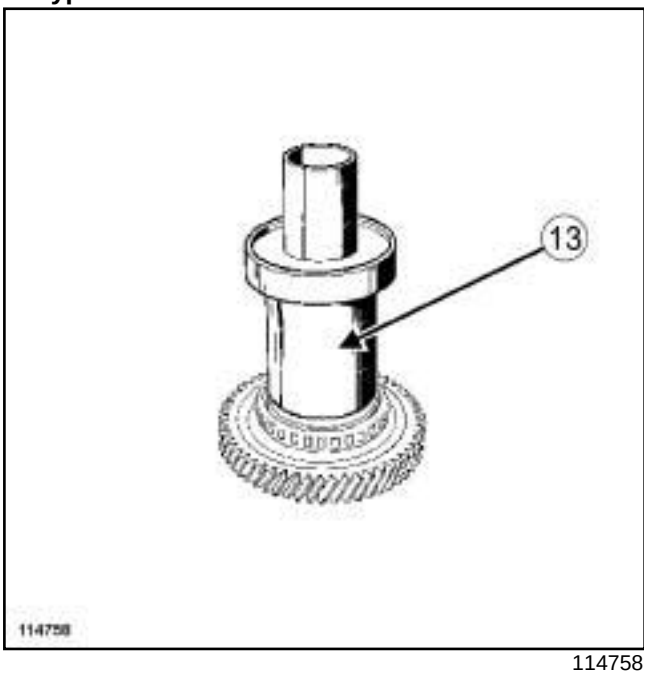

114758

Refit the bearing using the press and the **(Bvi. 1059)** (**13**) .

JR type on crownwheel side

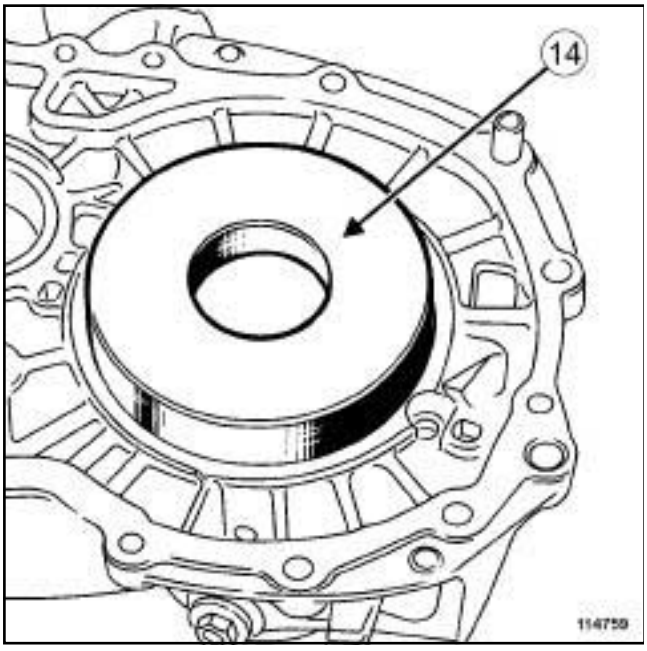

114759

Refit the large bearing's cup using the press and the **(Bvi. 1059)** (**14**) .

JR type on sunwheel side

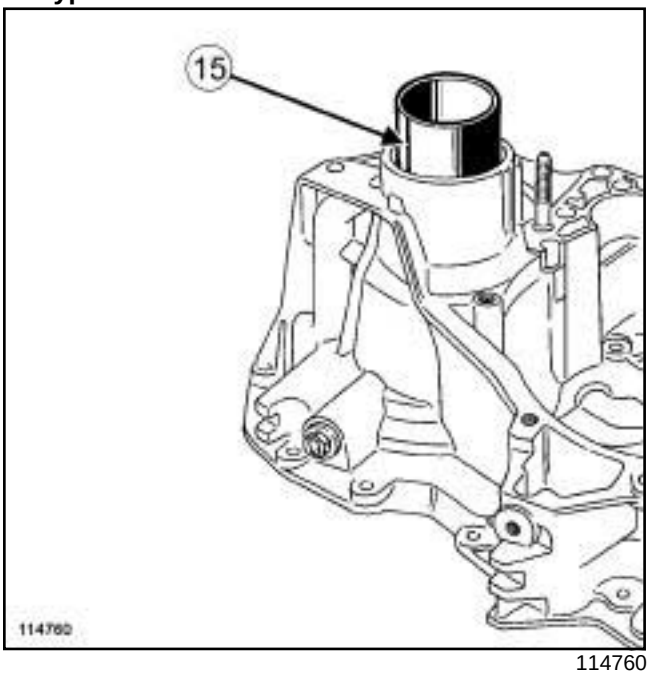

114760

Refit the small bearing's cup using the press and the **(Bvi. 1059)** (**15**) .

JAX, and JA3 – JHX

Special tooling required		
Bvi. 1576	JHX – JAX	Pressure plate housing bearing refitting mandrel.

REMOVAL

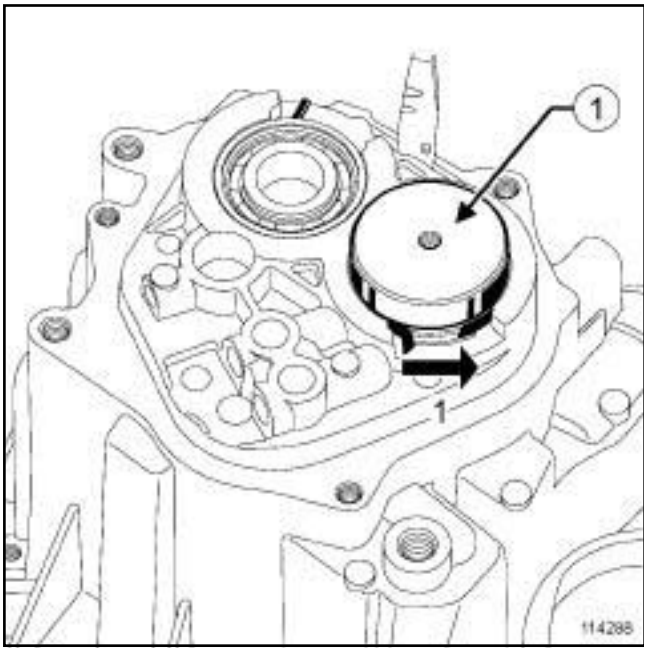

114288

Remove the circlips ⇨ (**1**) .

Remove the bearing from inside the housing using the **(Bvi. 1576)** (**1**) .

REFITTING

Place the new circlips in their respective housings.

Fit the bearings using the **(Bvi. 1576)**

Knock the tool with the bearing in using a small hammer.

JH type open differential gearbox

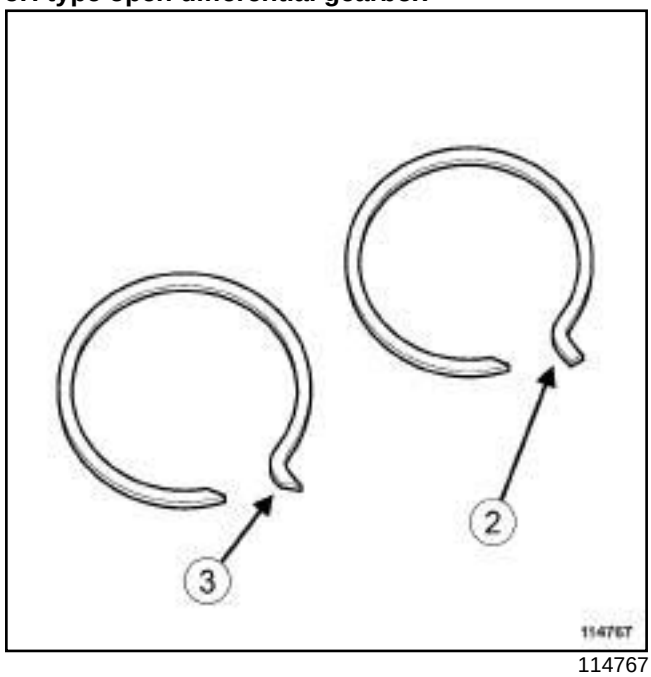

114767

the lock rings have various shapes:

- lock ring for the input shaft (**2**) .
- lock ring for the output shaft (**3**)

JAX, and JA5 – JRX, and JR5

Special tooling required		
Bvi. 1576	JAX	Pressure plate housing bearing refitting mandrel.

REMOVAL

I - REMOVAL OF THE BEARING ON THE INPUT SHAFT SIDE

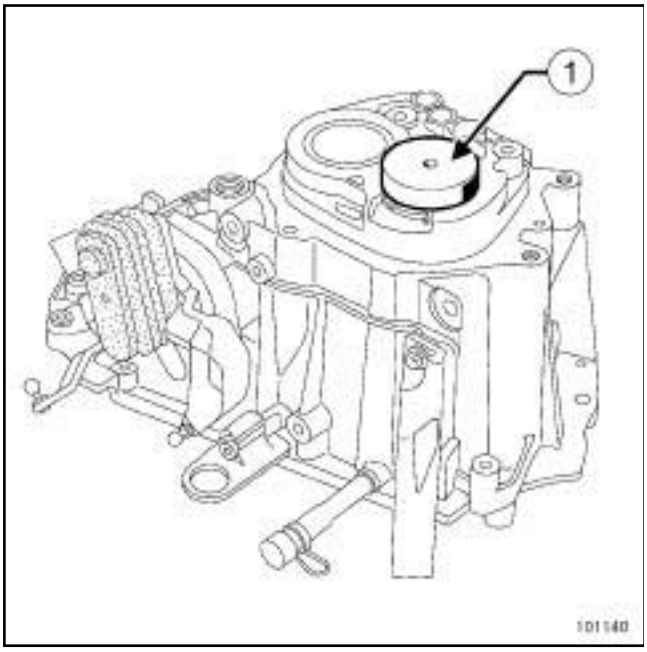

101140

Remove the circlips.

Remove the bearing from inside the housing using the **(Bvi. 1576)** at (**1**) .

II - REMOVAL OF THE BEARING CUP ON THE OUTPUT SHAFT SIDE

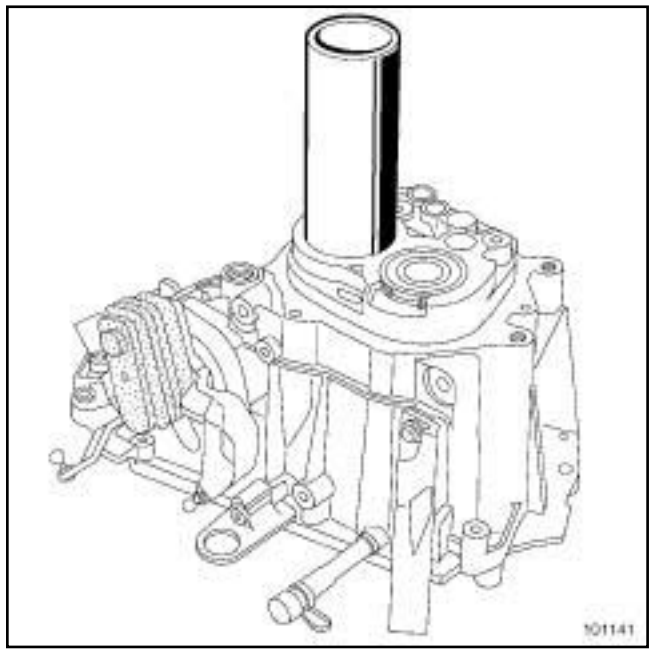

101141

Remove the bearing cup on the output shaft side using a tube with a diameter of **55 mm** .

REFITTING

I - REFIT THE BEARING ON THE INPUT SHAFT SIDE

Fit a new circlip.

Fit the bearing using the **(Bvi. 1576)**

JAX, and JA5 – JRX, and JR5

II - REFITTING OF THE BEARING CUP ON THE OUTPUT SHAFT SIDE

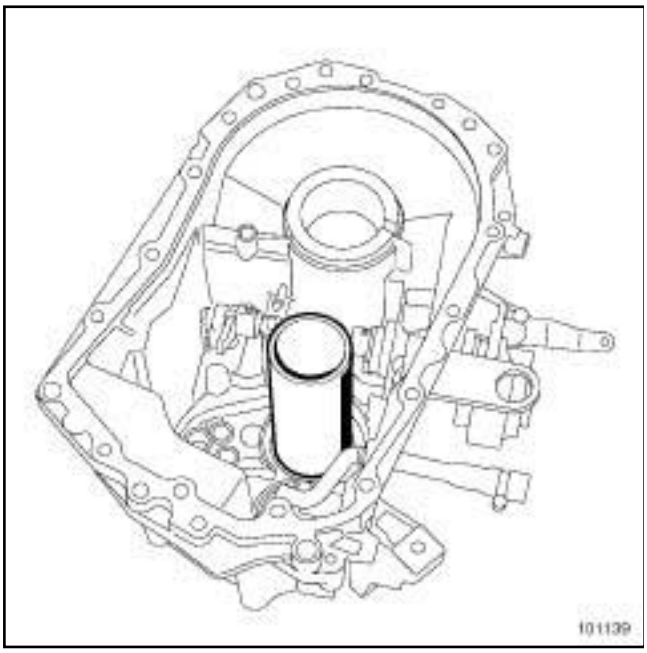

101139

Refit the bearing using a tube with a diameter of **60 mm** .

JAX, and JA3 – JHX

Special tooling required		
Bvi. 1165	JHX	For extracting output shaft bearing on clutch/differential housing.
Bvi. 1601	JHX	Primary shaft oil seal fitting tool.

REMOVAL

I - OUTPUT SHAFT BEARING

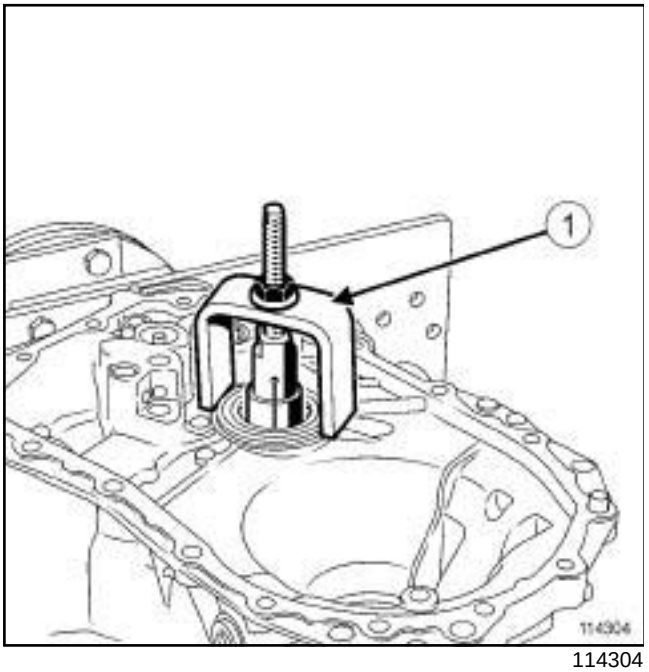

114304

Cut the base of the plastic hollow tube located at the centre of the bearing.

Position the **(Bvi. 1165)** (**1**) .

Remove the output shaft bearing from the clutch housing.

II - INPUT SHAFT BEARING

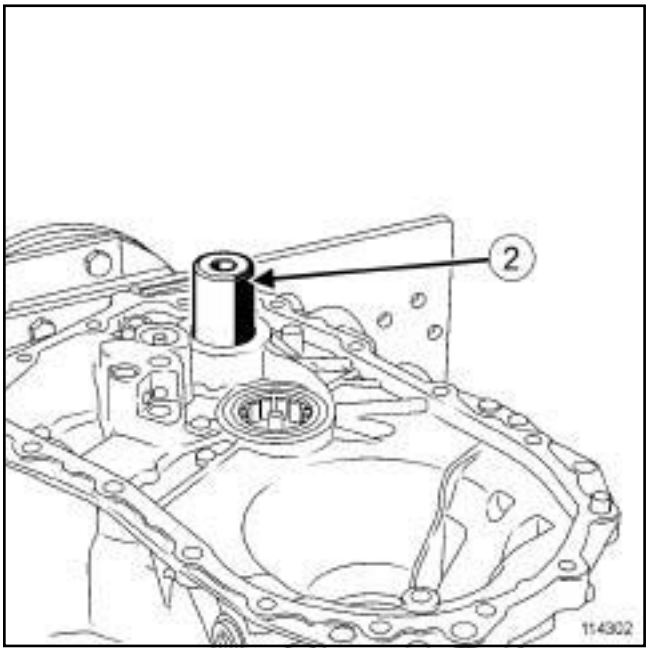

114302

Remove the bearing cup on the input shaft side using a press and a tube with a diameter of **38 mm** (**2**) .

JAX, and JA3 – JHX

REFITTING

I - OUTPUT SHAFT BEARING

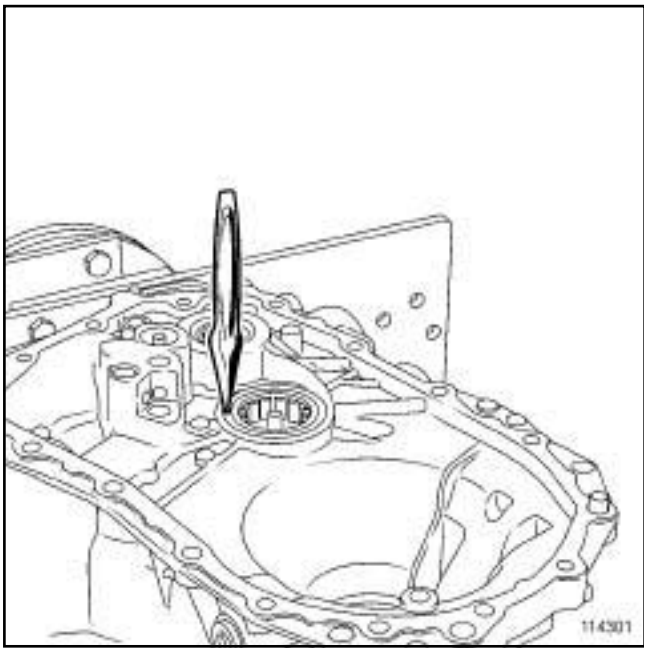

114301

Fit a new deflector.

Refit the output shaft bearing so that it is flush with the inner surface of the clutch housing.

Crimp the output shaft bearing on the clutch housing using a chisel.

II - INPUT SHAFT BEARING

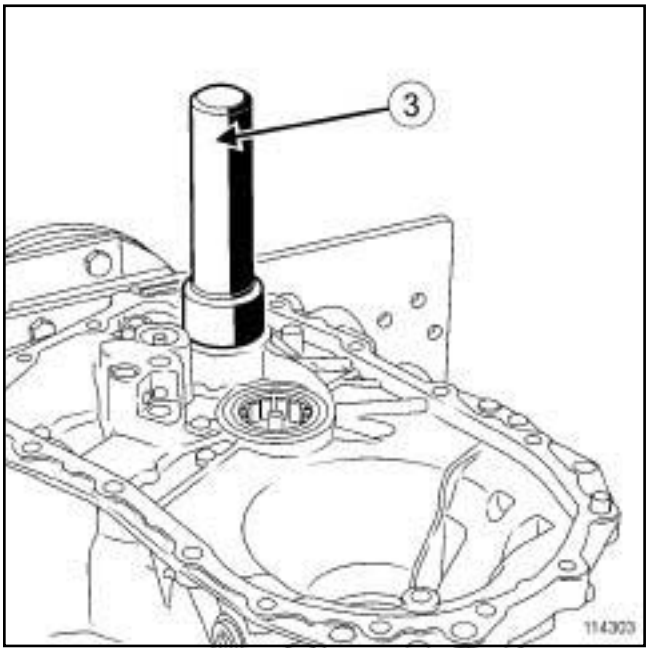

114303

Refit the bearing cup on the input shaft side using a press and the **(Bvi. 1601)** (**3**) .

JAX, and JA5 – JRX, and JR5

Special tooling required		
Bvi. 1601	JRX – JRX	Primary shaft oil seal fitting tool.

REMOVAL

I - OUTPUT SHAFT BEARING CUP

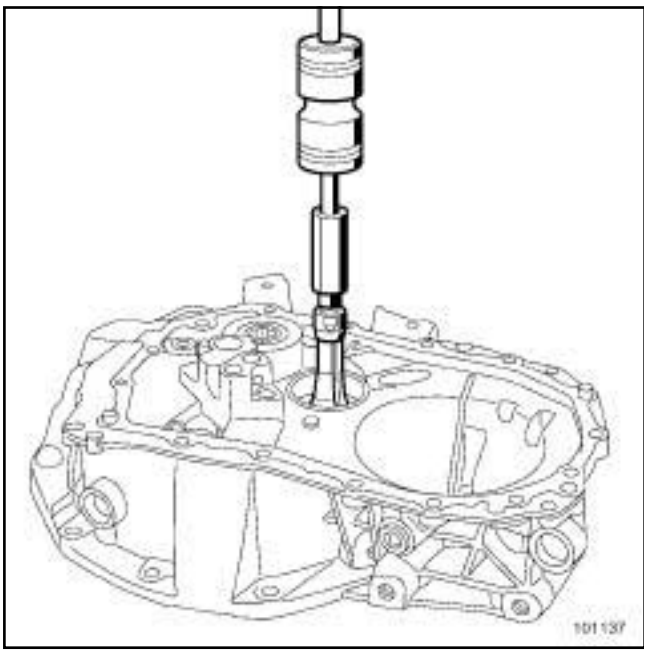

101137

Cut the base of the deflector plastic hollow needle located at the centre of the cup.

Remove the output shaft bearing cup from the clutch casing using a slide hammer.

II - INPUT SHAFT BEARING

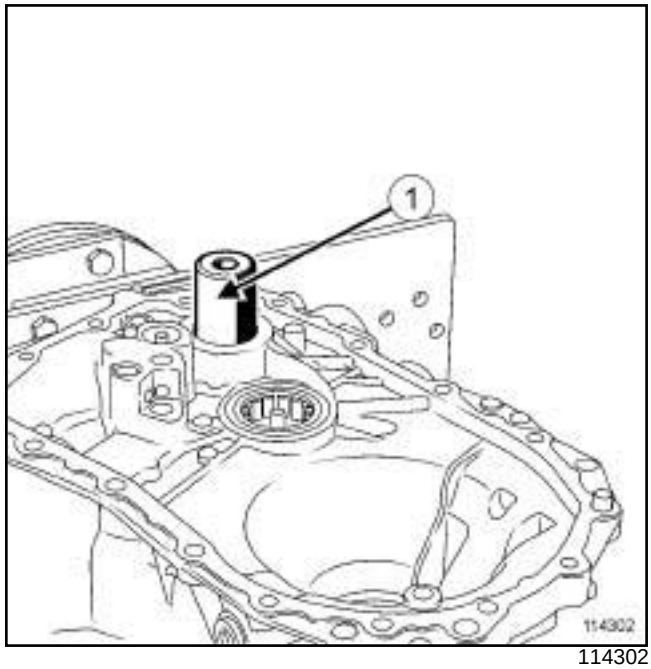

114302

Remove by pressing the input shaft bearing using a **Ø 38 mm** (**1**) tube.

REFITTING

I - OUTPUT SHAFT BEARING CUP

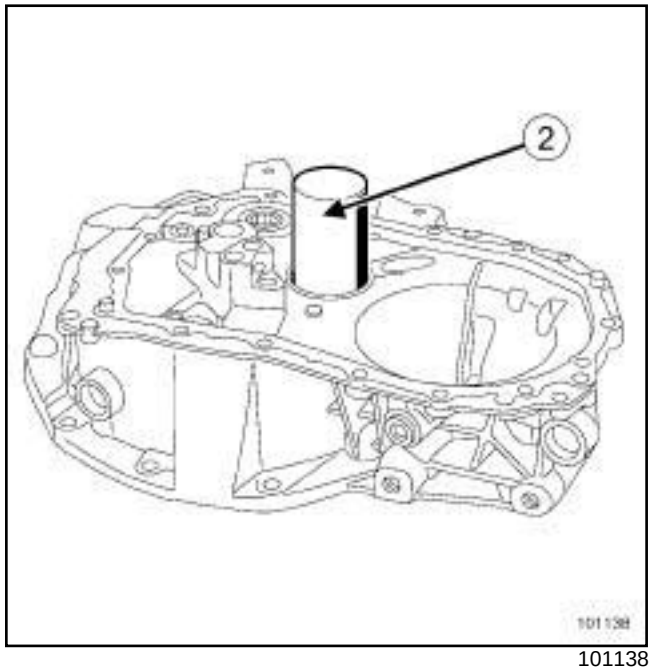

101138

Fit a new deflector.

Replace the output shaft bearing cup using a **Ø 55 mm** (**2**) tube.

JAX, and JA5 – JRX, and JR5

II - INPUT SHAFT BEARING

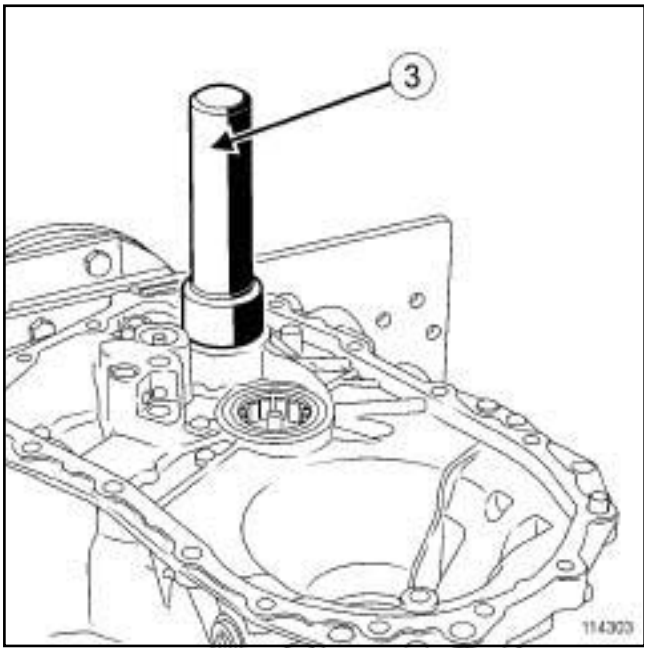

114303

Replace the input shaft bearing using tool **(Bvi. 1601)** (**3**) .

JAX – JHX – JRX, and JR5

REMOVAL

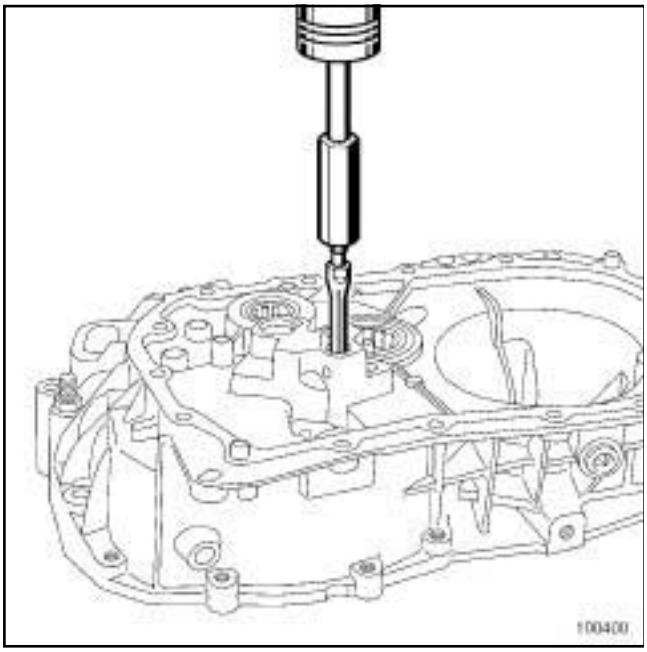

100400

Remove the rings with a slide hammer.

REFITTING

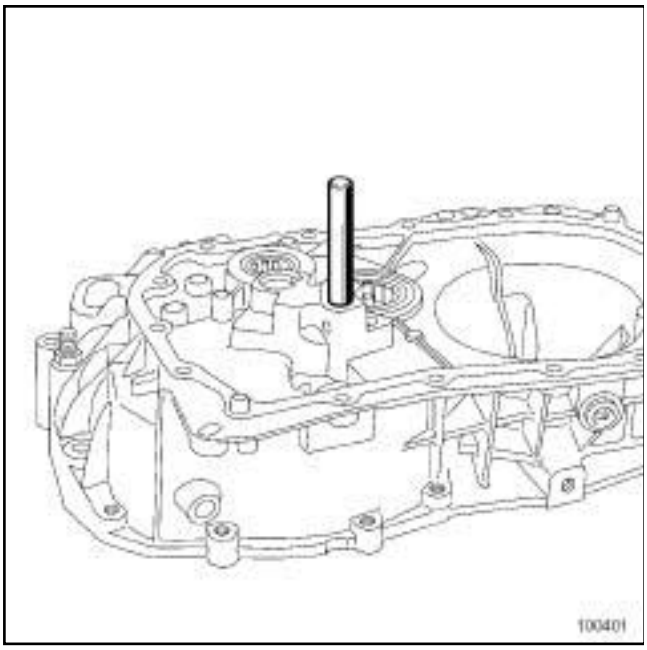

100401

Refit the rings using a **14.5 mm** tube down to the thrust bearing.

JAX – JHX – JRX, and JR5

Tightening torques ▽	
switch mounting bolts	**21 Nm**

REMOVAL

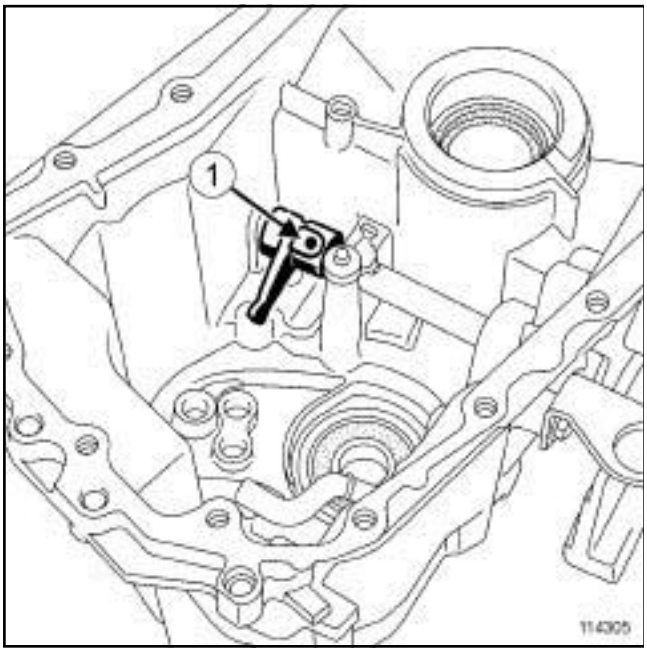

114305

Unpin the selector finger (**1**) .

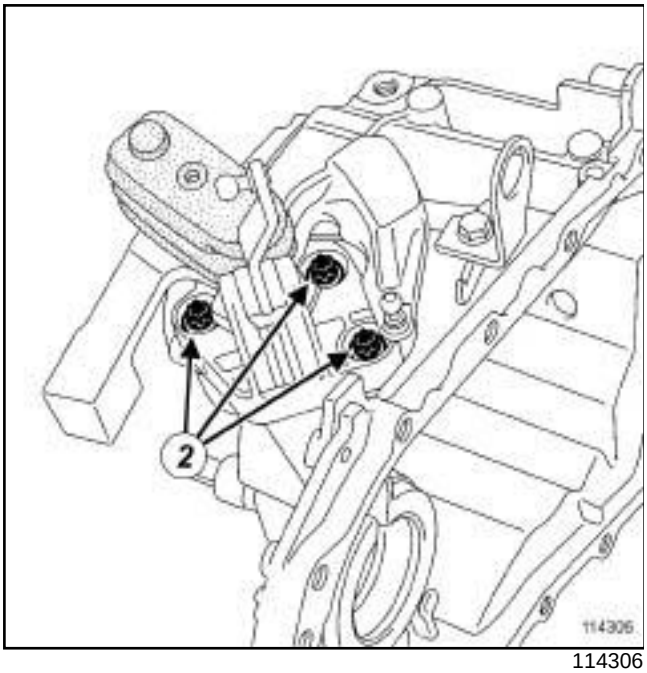

114306

Remove:

- the mounting bolts (**2**) ,
- the switch assembly.

REFITTING

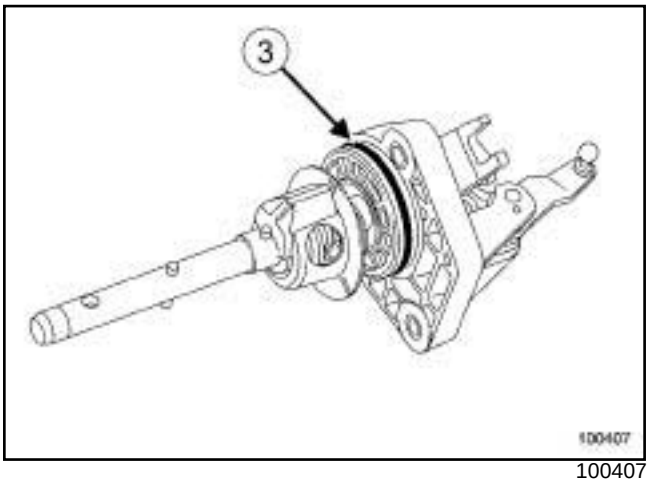

100407

Replace the O-ring. (**3**)

Proceed in the reverse order to removal.

Tighten to torque the **switch mounting bolts (21 Nm)** .

JRX, and JR5 – JAX – JHX

Special tooling required		
Bvi. 949	JHX – JRX	Tool for removing/refitting Mecanindus pins for selector fork shafts

GEARBOX WITH ENCLOSED DIFFERENTIAL

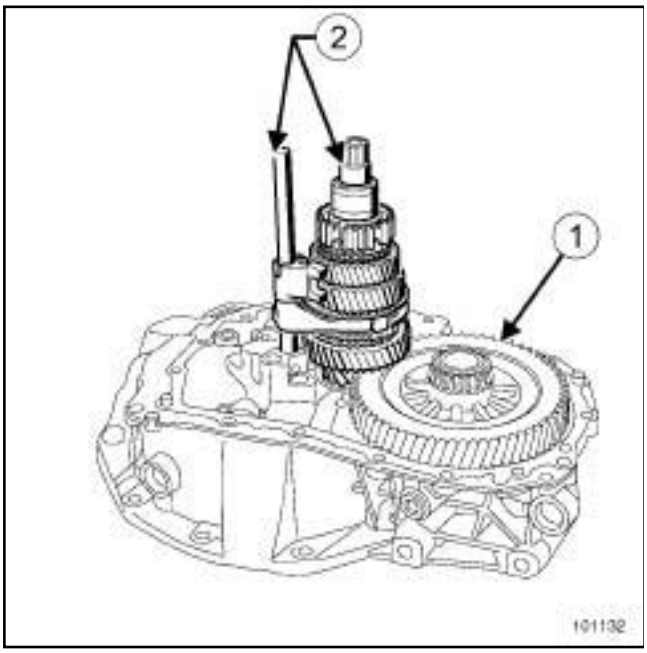

101132

Refit:

- the differential (**1**) ,
- the output shaft fitted with the "first-second" fork (**2**) .

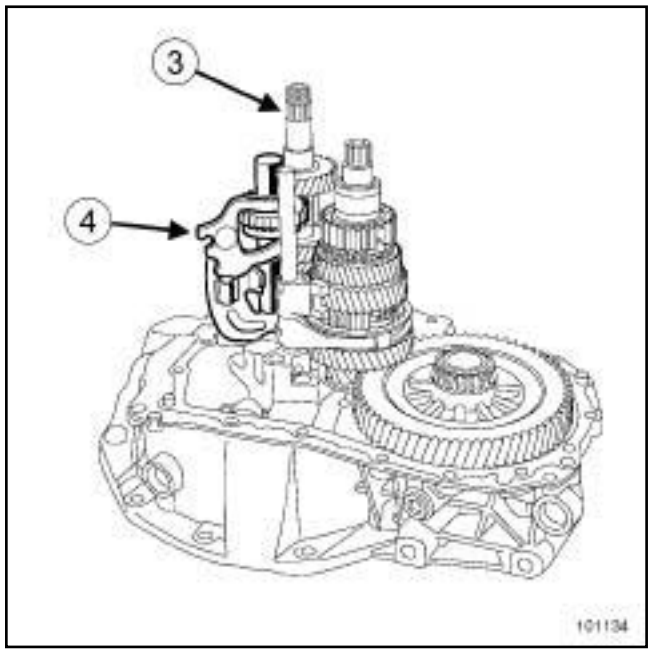

101134

Refit:

- the input shaft, (**3**)
- the reverse gear assembly (**4**) .

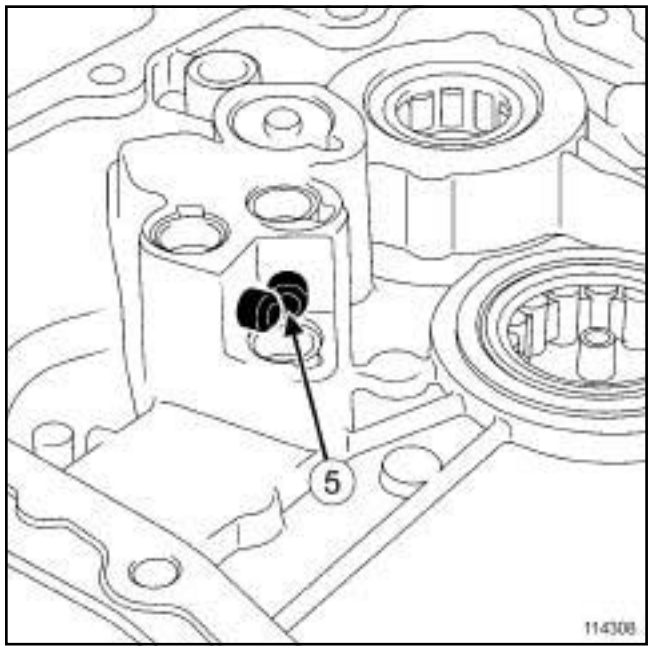

114308

Refit the inhibitor shafts (**5**) .

JRX, and JR5 – JAX – JHX

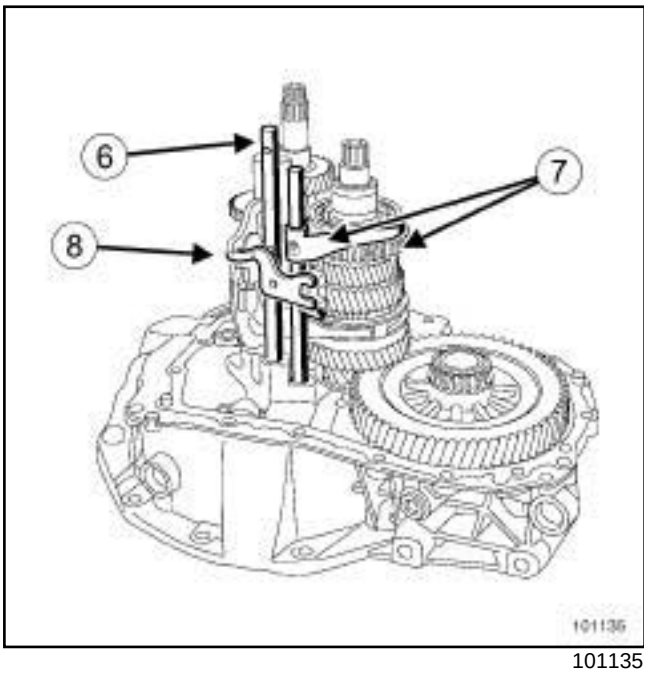

101135

Refit:

- the fifth gear shaft (**6**) ,
- the third-fourth gear "selector rod - fork" assembly (**7**) ,
- turn the reverse gear shaft to position the fifth gear fork in the reverse gear shaft recess (**8**) .

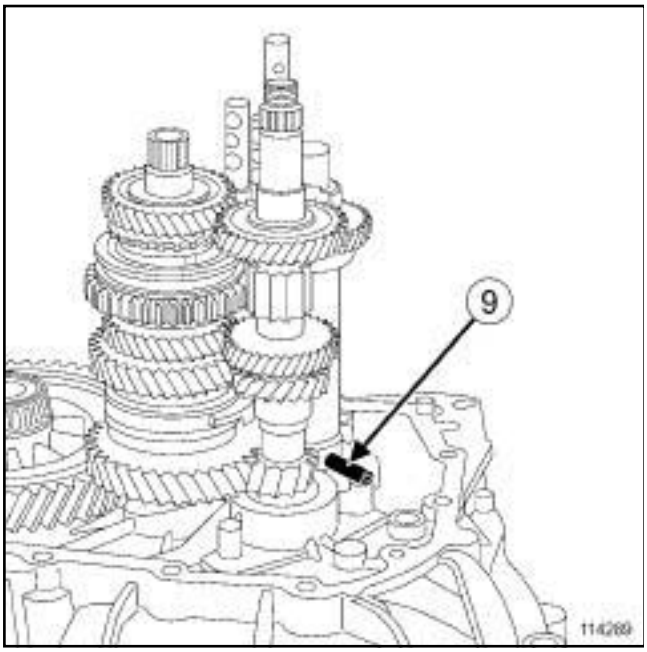

114289

Pin the reverse gear shaft (**9**) .

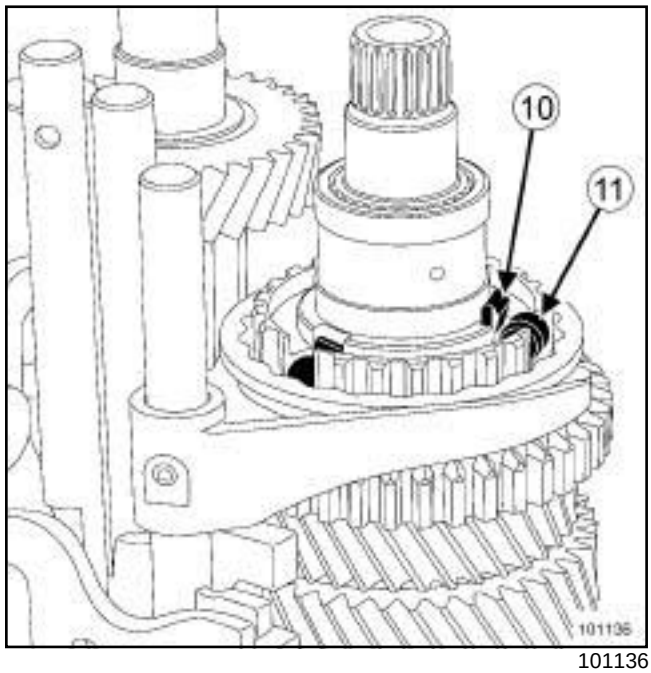

101136

Engage third gear.

Insert:

- the springs (**10**) ,
- the rollers (**11**) .

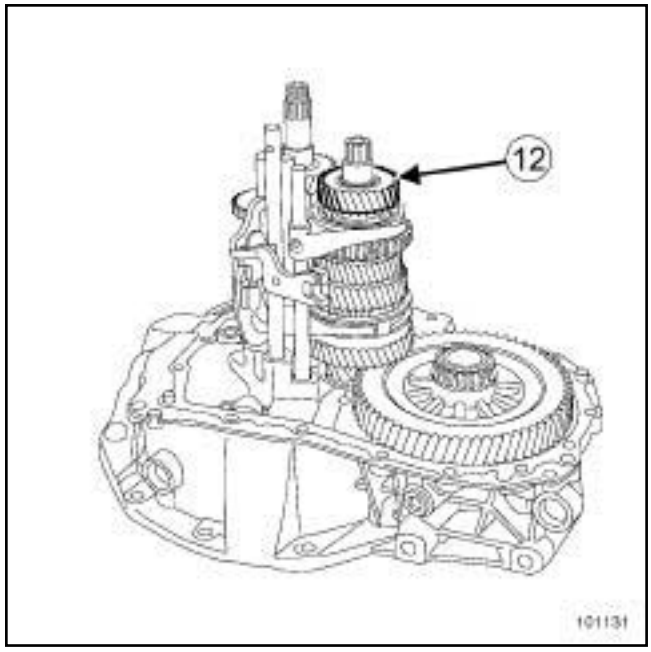

101131

Refit:

- the fourth gear sprocket (**12**) with its synchronisation,
- the calibration washer,
- the output shaft bearing

JRX, and JR5 – JAX – JHX

GEARBOX WITH OPEN DIFFERENTIAL

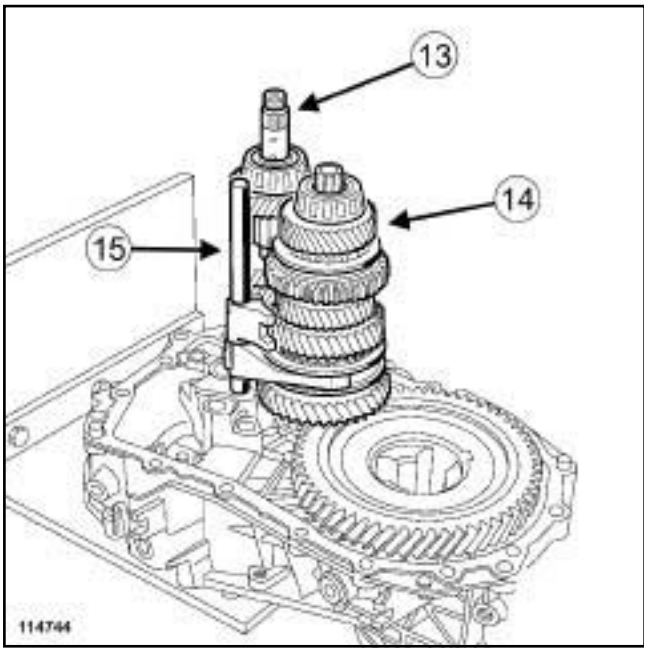

114744

Simultaneously position the input and output shafts fitted with the first-second fork (**13**) (**14**) (**15**) .

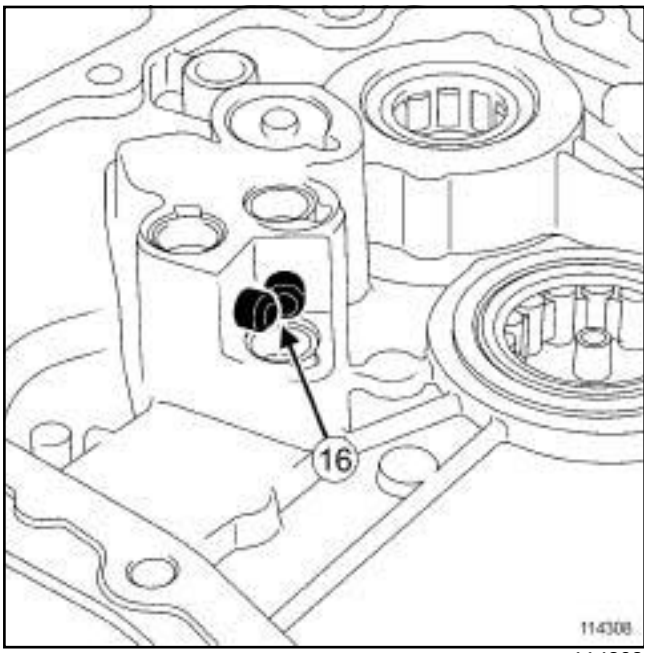

114308

Refit the inhibitor shafts (**16**) .

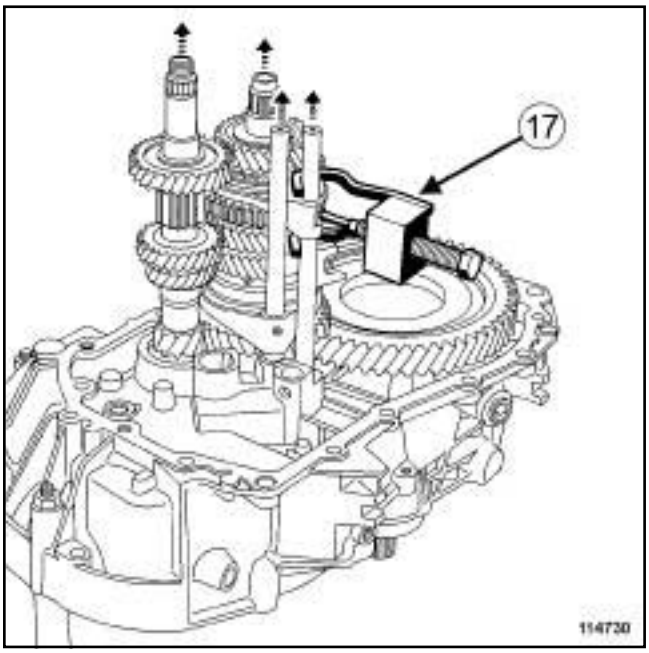

114730

Gently lift the input and output shafts and fit the third-fourth fork.

Pin the fork using tool **(Bvi. 949)** (**17**) .

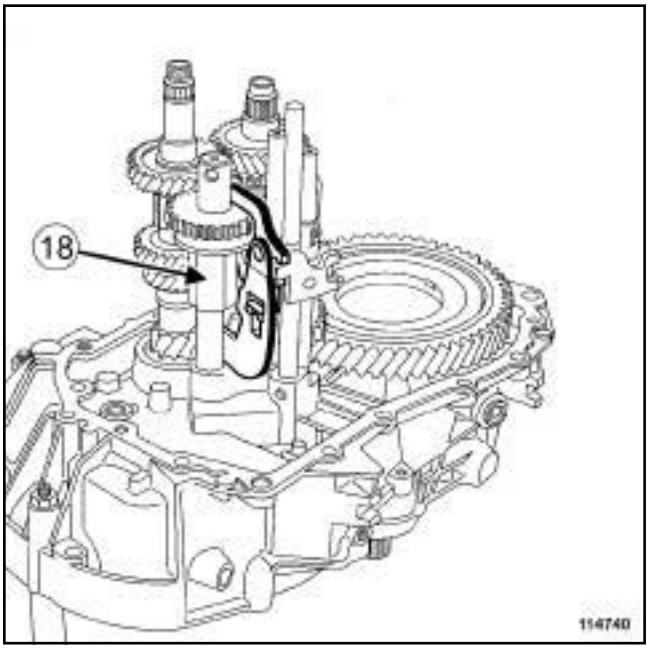

114740

Fit the reverse gear shaft (**18**) while raising the input shaft.

JRX, and JR5 – JAX – JHX

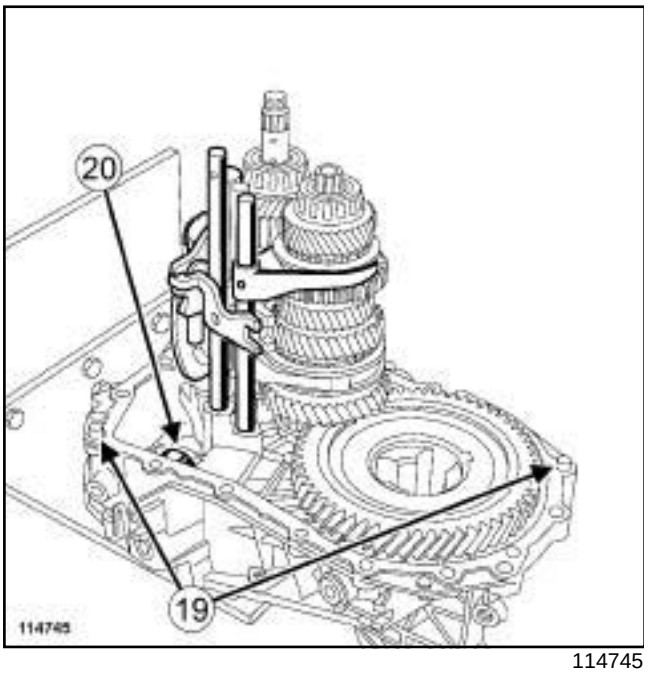

114745

Be sure to fit:

- the centring bushes (**19**) ,
- the magnet (**20**) .

Fit the timing rings and the conical bearings for gearbox JH3 and JR5.

JAX – JHX – JRX, and JR5

Special tooling required		
Bvi. 1570	JHX – JRX	Tools for fitting selector fork shaft locking systems.
Bvi. 1175	JAX – JRX – JHX	Bolt for fitting 5th speed fixed gear.
Bvi. 1666	JAX – JHX – JRX	Tool for fitting differential seals.
Bvi. 945	JHX	Mandrel for fitting sunwheel seal.
Bvi. 1058	JRX	Mandrel for fitting gearbox output seal, differential side

Tightening torques ▽	
gearbox bell housing bolts	**25 Nm**
reverse gear switch	**25 Nm**
mounting bolt for the reverse gear fork bracket	**25 Nm**
output shaft bolt	**80 Nm**
input shaft nut	**190 Nm**
bolts mounting the fifth gear casing on the gearbox	**25 Nm**
bolts mounting the clutch slave cylinder on the gearbox	**21 Nm**

REFITTING

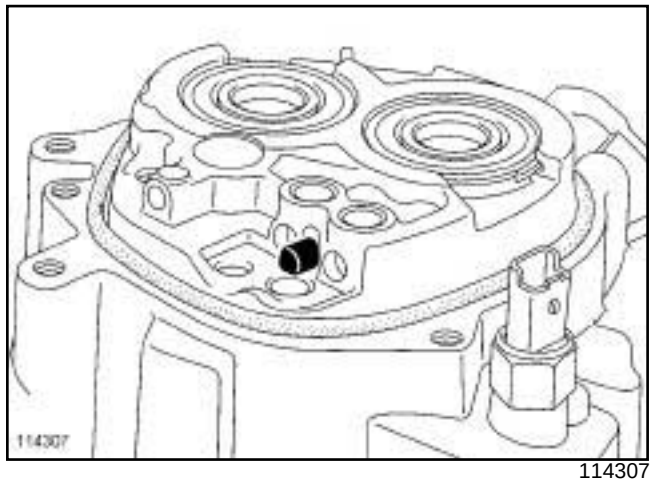

114307

Fit the first-second, third-fourth and fifth gear shaft locating ball cartridges into the gearbox housing.

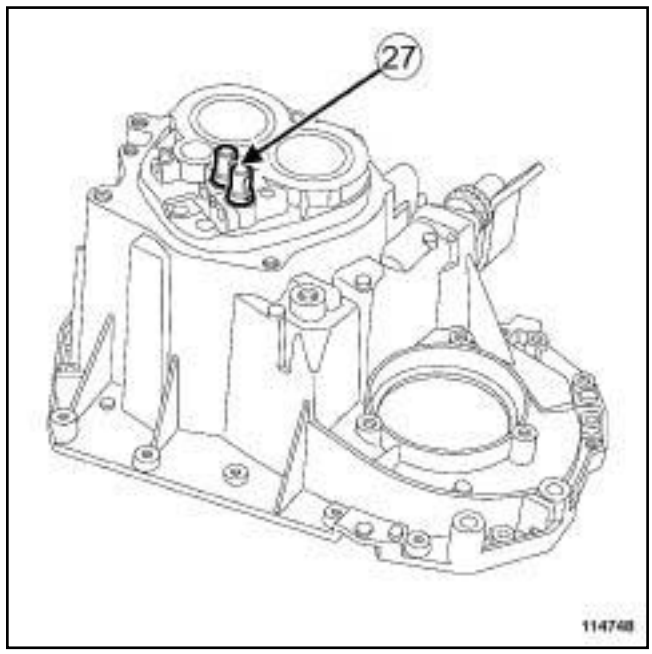

114748

Fit the springs and balls for gearbox not fitted with a ball cartridge.

Engage the ball assemblies using the **(Bvi. 1570)** (**27**) .

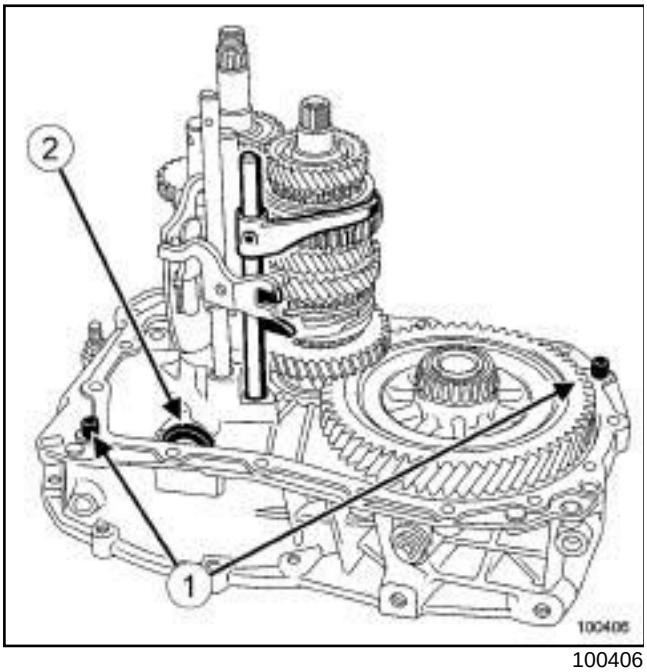

100406

Engage third gear.

Check the positioning:

- of the centring dowels (**1**) ,
- of the magnet (**2**) .

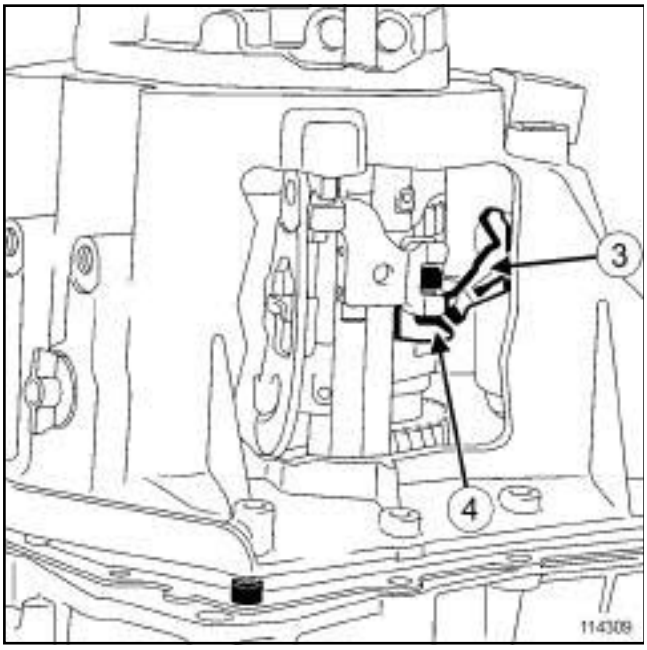

114309

Apply a bead of **SEALING RESIN** to the joint face.

Refit the gearbox housing, guiding the shift finger (**3**) into the fork of the third gear (**4**) .

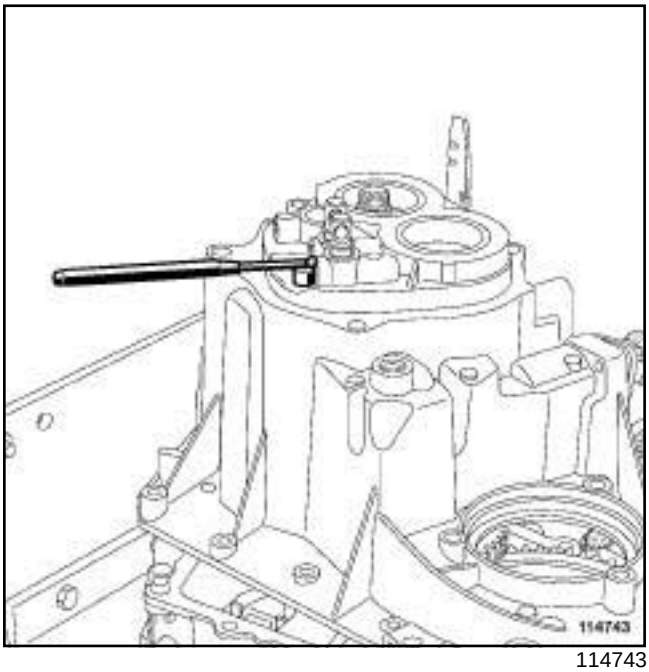

114743

Engage the locating ball for the fifth gear shaft for gearboxes not fitted with a locating ball cartridge.

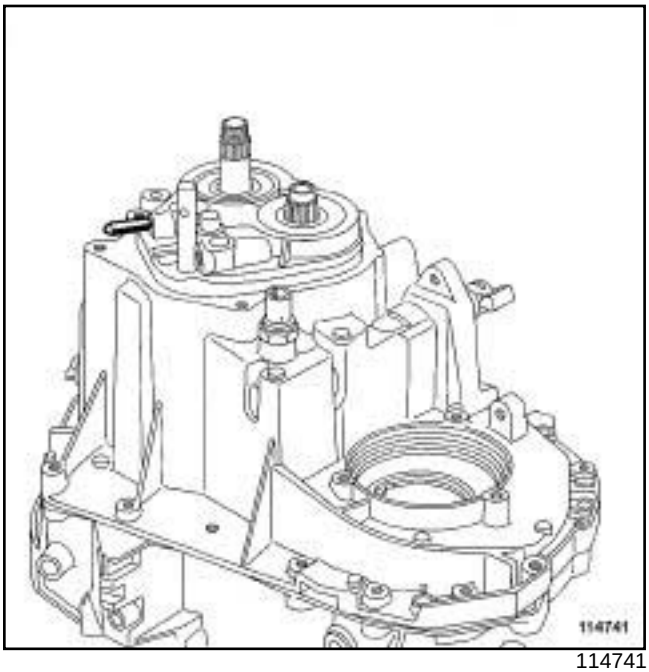

114741

Insert the reverse gear shaft retaining shaft (if fitted).

JAX – JHX – JRX, and JR5

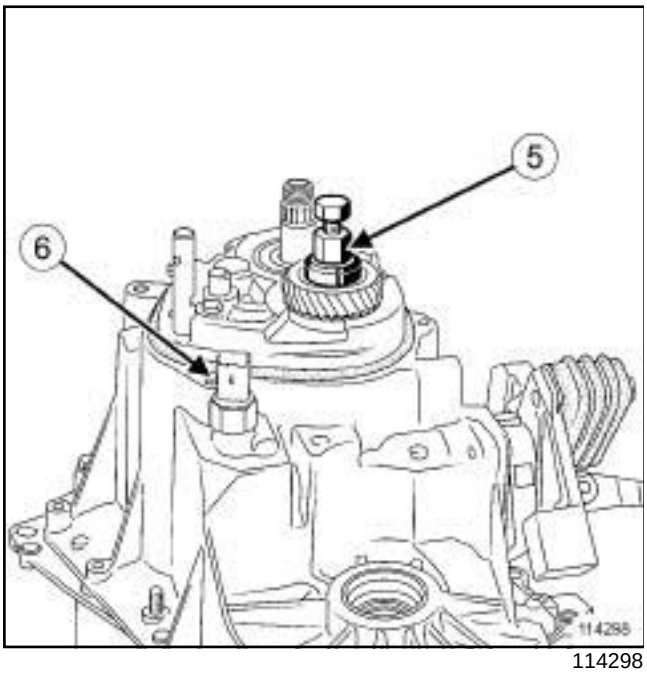

114298

Pretighten the gearbox bell housing bolts.

Turn the input shaft to ensure correct engagement of the bearings.

Tighten the **gearbox bell housing bolts (25 Nm)** .

Apply three drops of **LOCTITE FRENBLOC** to the grooves on the fifth gear fixed gear.

Fit the fifth gear fixed gear using the **(Bvi. 1175)** (**5**) .

Refit the reverse gear switch (**6**) .

Tighten to torque the **reverse gear switch (25 Nm)** .

Old type fifth gear assembly:

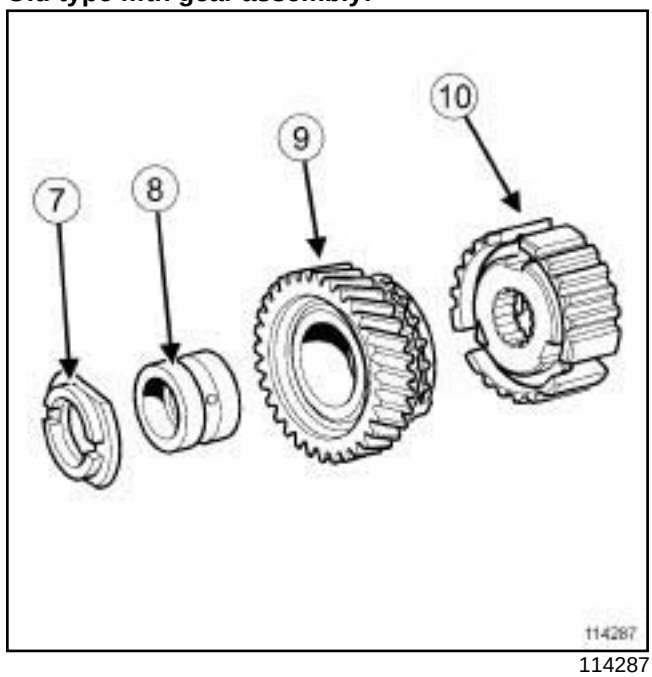

114287

On the input shaft, refit the fifth gear module comprising:

- the support washer (**7**) (large face on gear side),
- the gear supporting ring (**8**) ,
- the fifth gear pinion fitted with its synchroniser ring (**9**) ,
- the fifth gear selector rod fitted with its spring (**10**) .

JAX – JHX – JRX, and JR5

New KYOWA fifth gear assembly

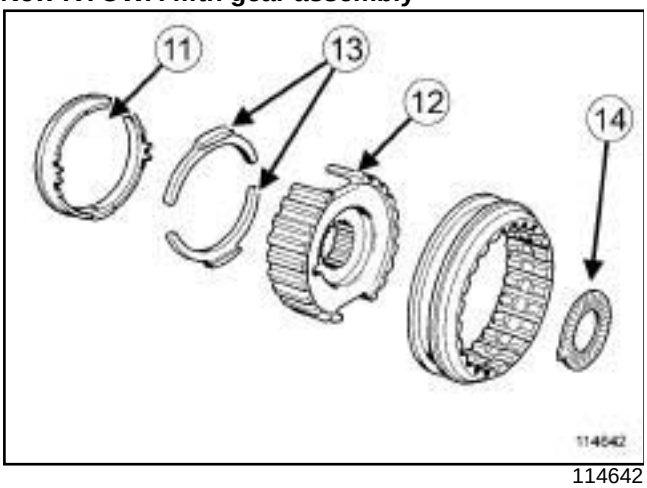

114642

On the input shaft, refit the fifth gear module comprising:

- the support washer ***(7)*** (large face on gear side),
- the gear supporting ring ***(8)*** ,
- the fifth gear pinion ***(9)*** fitted with its synchronisation ring (**11**) ,
- the fifth gear selector rod (**12**) fitted with two synchroniser levers (**13**) ,
- the fifth gear lock washer (**14**) .

Note:

The KYOWA fifth gear assembly may replace the old type fifth gear assembly.

An assembly kit is available as a replacement part.

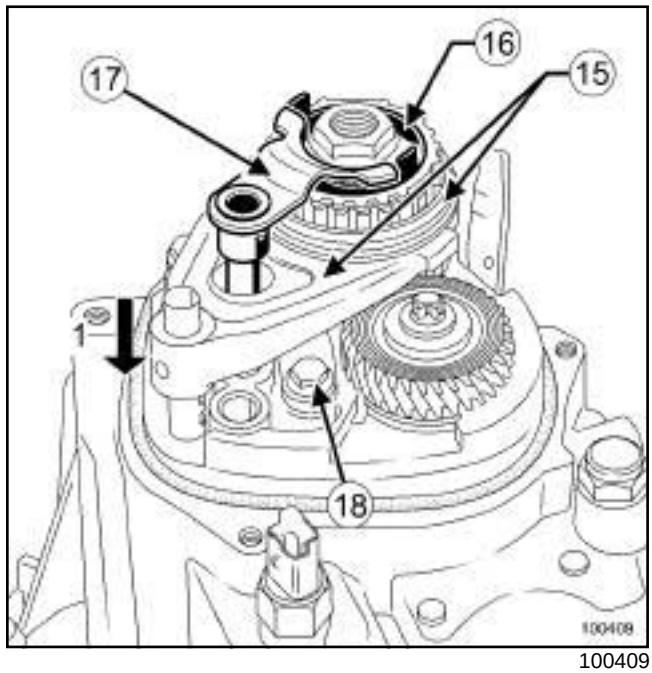

100409

Refit:

- the fifth gear selector rod - fork assembly (**15**) ,
- the synchronisation of the reverse gear (**16**) (only for the old type fifth gear assembly),
- the fifth gear fork (**17**) (only for the old type fifth gear assembly).

Tighten to torque the **mounting bolt for the reverse gear fork bracket (25 Nm)** (**18**) (only for the old type fifth gear assembly).

Slide the fifth gear fork ⇨ (**1**) on its shaft to engage fifth gear.

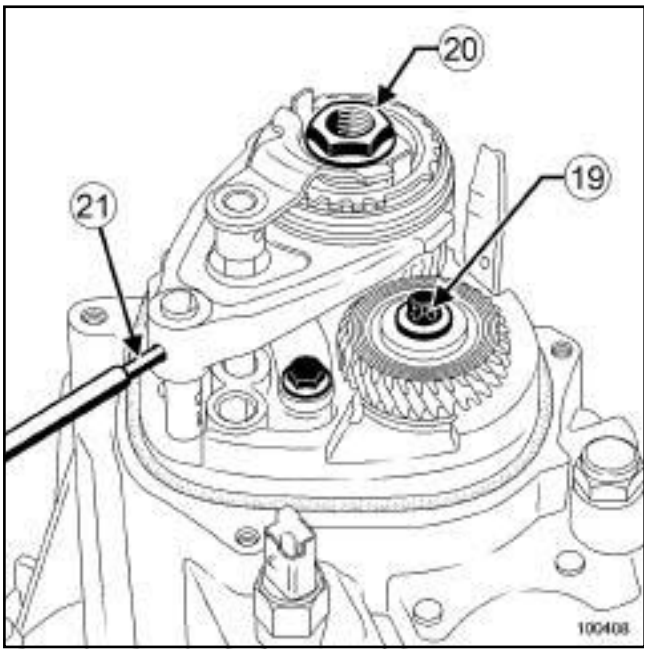

100408

Fit:

- the output shaft bolt (**19**) ,
- the input shaft nut (**20**) .

Tighten to torque:

- the **output shaft bolt (80 Nm)** (**19**) .
- the **input shaft nut (190 Nm)** (**20**) .

Shift into neutral.

Pin the fifth gear fork (**21**) .

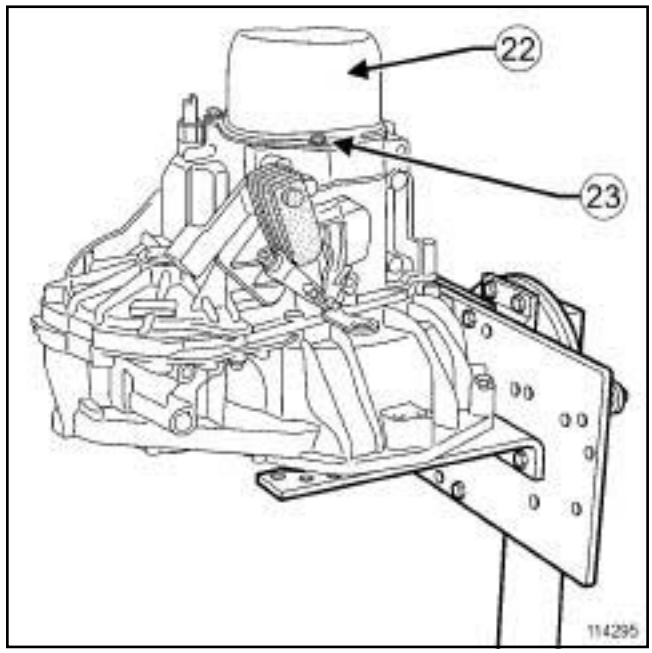

114295

Fit a new O-ring to the fifth gear casing.

Refit the fifth gear casing on the gearbox (**22**) .

Tighten to torque the **bolts mounting the fifth gear casing on the gearbox (25 Nm)** (**23**) .

GEARBOX WITH ENCLOSED DIFFERENTIAL

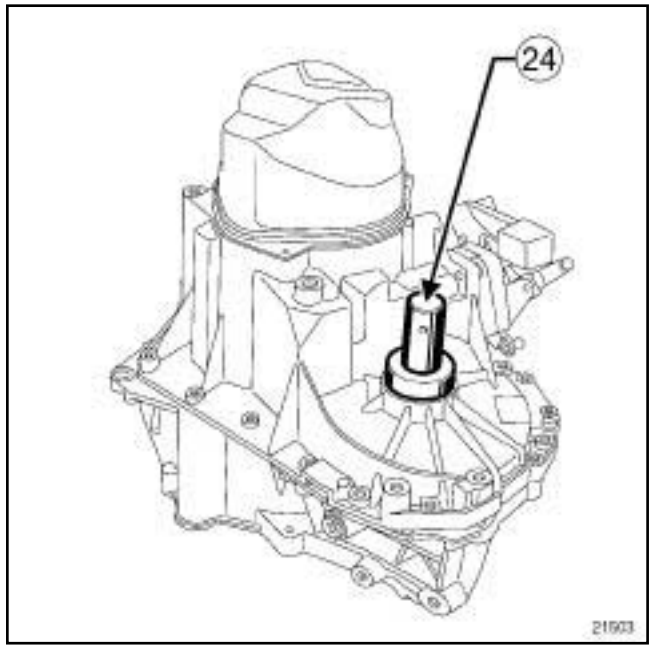

21503

Refit the new seals around the differential output using the **(Bvi. 1666)** (**24**)

JAX – JHX – JRX, and JR5

GEARBOX WITH OPEN DIFFERENTIAL

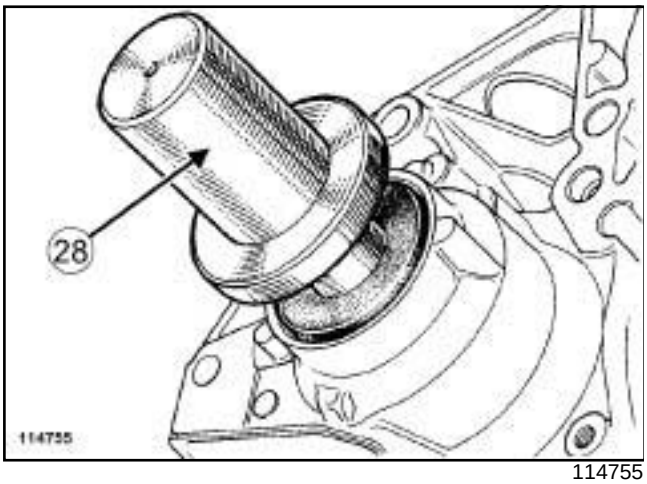

114755

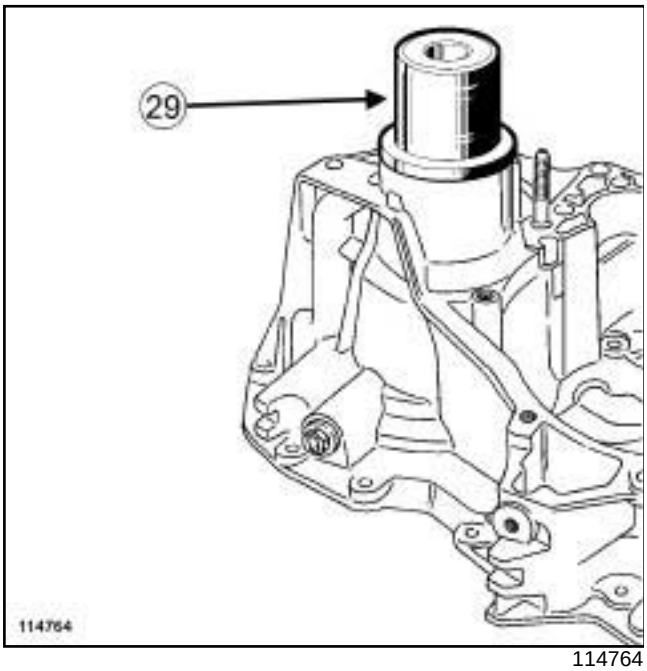

114764

Refit a new seal at the differential output using the **(Bvi. 945)** (**28**) for JH gearboxes.

Refit a new seal at the differential output using the **(Bvi. 1058)** (**29**) and the cone of the **(Bvi. 945)** for JR gearboxes.

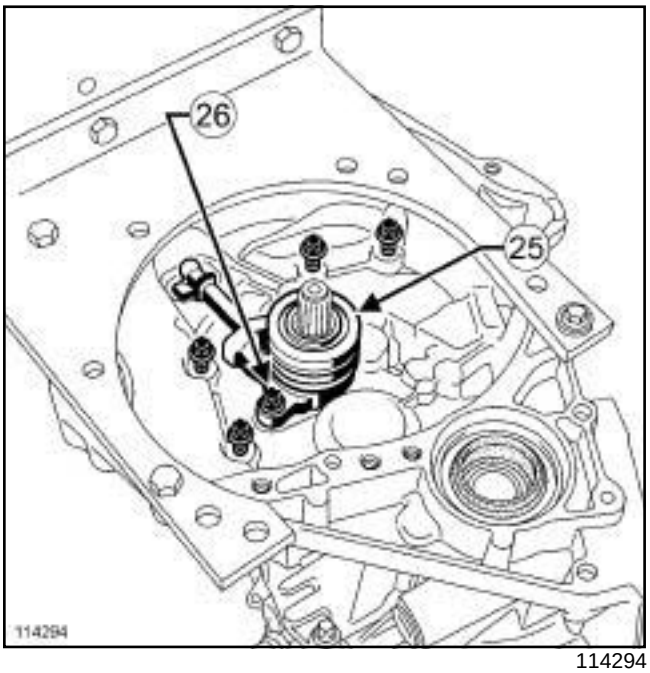

114294

Refit the clutch slave cylinder (**25**) .

Tighten to torque the **bolts mounting the clutch slave cylinder on the gearbox (21 Nm)** (**26**) .

GREEN TECHNICAL NOTE	NOVEMBER 2001	Nr. **9300A**
English Edition	6001 999 304	Dept.P 700.32

	Vehicle type	S/chapter
ALL TYPES	XXXXXX	01

Modification : Technical Note in New Form

01 **TECHNICAL NOTES : CHARACTERISTICS**

DESCRIPTION TECHNICAL NOTES.

A Tchnical Note has as characteristics its colour,identification number,item number,its title,vehicles type and affected chapters,as per following model:

TECHNICAL NOTE XXXXXX (1)	XXXXXX XXXX (2)	Nr.XX (4)
Romanian edition	xxxxxxxxxx (3)	Department xxxxxx (5)

	Vehicle type	Chassis no	S/Chapter
DACIA XXXX (6)	R xx xxx (7)	xxx xxx (8)	xx (9)

XX (9) xxxx xxxx (10)
O.T.S. xxxx (11)
Identification on the intervention label : xx (12)
Other affected s/chapters : xx (13)

Engine : xxx (14) Basic document : MR xxx (xxxxxxxxxx) (16)
Gear box : xxx (15)

The explanation of the data described in the Technical Note heading is the following:

(1) - represents the colour of the Technical Note which is assigned subject to the transmitted information;
(2) – represents issuing month and year of the Technical Note;
(3) – represents item number of the Technical Note made of 10 characters ;
(4) – represents the identification number of the Technical Note;
(5) – represents the code of the issuing department;
(6) – represents the denomination of the vehicle on which the Technical Note applies;
(7) – represents the vehicle type on which the Technical Note applies (the VIN code- made of 6 alphanumeric characters) ; see << Annexe 1 >> ;

The reparation methods prescribed by the manufacturer in the present document are established subject to technical specifications in force at the document issuing date.
These are subject to modifications brought by the manufacturer at the fabrication of different assemblies, subassemblies or accessories of its vehicles.

All rights reserved to SC Automobile Dacia SA.
Reproduction or translating even partially of this present document is forbidden without the written authorisation of the manufacturing company.

© **Automobile Dacia 2001**

(8) – represents these chassis nos. range of the affected vehicles;
(9) – represents the chapter number from affected "Workshop Manual ";
(10)- represents the denomination of the chapter from "Workshop manual";
(11) – represents the **OTS** code (Special technical operation) ;
(12) – represents the incident code. This will be marked with **" X "** on the << Intervention label>> after performing the operation for incident elimination;
(13) – represents the numbers of the others affected s/chapters from the Workshop manual;
(14) – represents the engine type of which the affected vehicle is equipped;
(15) – represents the gearbox type of which the affected vehicle is equipped;
(16) – represents the document (Workshop manual,Technical Note) to which the Technical Note is referring.

Description regarding the colour assigned to Technical Notes.

The colour assigned to a Technical Note is subject to the transmitted information (technical data completion, launching of a new product, quality improvement, general data,etc) as follows:

WHITE

Process note for reparation methods;this is completing the technical evolution data of the vehicles in the gap between the issuing of two editions of a Workshop manual ex: dismounting/ remounting, characteristics, diagnosis,maintenance,etc) ;

ORANGE

Information note regarding the launching of a Presence Operation (novelty) in the Network (OPR).

Ex: - Part Launching Operation (OLO);
- Vehicles Launching Operation (OLV) .

GREEN

General information note (ex: summarising notes,etc) and information note for quality improving (to be applied further to client claim)

YELLOW

Information note regarding the quality improvement; to be applied further to client claim partially or totally taking into consideration the " OTS No" (Special technical Operation) for the vehicles within the warranty period and after warranty.

BLUE

Information note regarding the quality improvement and / or the compliance with expenses consideration by " OTS Nr. ", preventative accomplished for the vehicles being in warranty or after warranty period.

Interventions are imperative (obligatory) done through the authorised service centres at the first entry of the vehicle in the service centre.

RED

Information note regarding the quality improvement and / or the security with expenses consideration by " OTS Nr." Preventive accomplished for the vehicles being in warranty or after warranty period.

Interventions are imperative (obligatory) done through the authorised service centres at the first entry of the vehicle in the service centre.

The calling of the affected vehicles in the service centres might be as a result of a client calling campaign.

A Red or Blue Technical Note is a directive that if not applied might carry along the responsibility of the factors appointed to solve the affected vehicle incidents.

GENERAL Technical Note Characteristics	01

Description of the Technical Note content.

OBJECT - describes the denomination of the operation that must be performed in order to eliminate the incident for the affected vehicles (ex: replacement of keys head set).

ADMINISTRATIVE DATA, include:

- destination of the dismounted parts - provides the information about the place where defective parts must arrive(ex: warranty return);
- accounting elements –those elements which are managing the expense type,expense code,the part at the warranty buying price,granted labour time,claim form;
- **OTS Code (Special Technical Operation) –created to be applied in the authorised service centres in order to eliminate the incidents occurred at the Dacia vehicles range within the warranty period and after warranty period;The O.T.S. is launched with a Technical Note of yellow ,blue or red colour and a 4 numeric characters code is given for it.**
  Ex: 0105; 01 represents the issuing year (2001) and 05 represents the consecutive number.
- supplier code- composed of four numeric characters,is the symbol granted to the defective part supplier, assembly,subansembly ;
- client claim code – composed of two alphanumeric characters is the symbol granted subject to the defect type ;
- operation code – composed of four numeric characters is the symbol granted to the operation of defect elimination.
- affected time – represents the necessary time needed for performing the operation of defect elimination.

SERIES SOLUTION – represents the solution,the date and the chassis number from which the incident has been eliminated at the vehicles under fabrication.

AFTER SALE SOLUTION ,includes:

- denomination of the parts which must be replaced;
- the chassis numbers gap and the date till the vehicles with possible incident have been manufactured
- the moment of performing the intervention;
- the item numbers of original spare parts which are replaced;
- special tools needed when performing the intervention.

DESCRIPTION OF THE OPERATION – represents the actions strictly to be performed in order to eliminate the incident.

REPARATION OF THE VEHICLE AFTER INTERVENTION – presents the way of marking the incident code on the "Intervention label" applied on the cover of right front shock absorber column,after performing the intervention.

The Technical Notes will be transmitted to the authorised service centres as follows:

- on base paper or informatic base(E-mail) for export,in the requested language;
- on base paper or informatic base (E-mail) for intern .

The factors in charge of correct application of the Technical Notes have also the obligation of archive storing and replacement of the cancelled notes.

Issued by	Checked by	Approved by	Issued for :	
CUCOª I.	DRAGOMIR M.	NISTORESCU T.	Service Centres	X
			CNCD	X
			Data processing dept.	X
			Incident dept.	X
			Tech.Line	X
			Service Training Centre	X

ANNEXE 1

VEHICLE TYPE		VIN CODE
Dacia SupeRNova		R 52315
Dacia 1304 Front traction	Pick-up	D 16119
	Drop-Side	D 17119
	King-Cab	D 1S119
Dacia 1304 Rear propulsion	Pick-up	D 26119
	Drop-Side	D 27119
	King-Cab	D 2S119
Dacia 1304 4X4	Pick-up	D 46169
	Drop-Side	D 47169
	King-Cab	D 4S169
Dacia 1307	Front traction	D 1F119
	Rear propulsion	D 2F719
	4X4	D 4F769
Dacia 1310 Berlina - equiped with 1397 cc engine - equiped with 1557 cc engine		 R 11711 R 11719
Dacia 1310 Break - equiped with 1397 cc engine - equiped with 1557 cc engine		 R 13311 R 13319