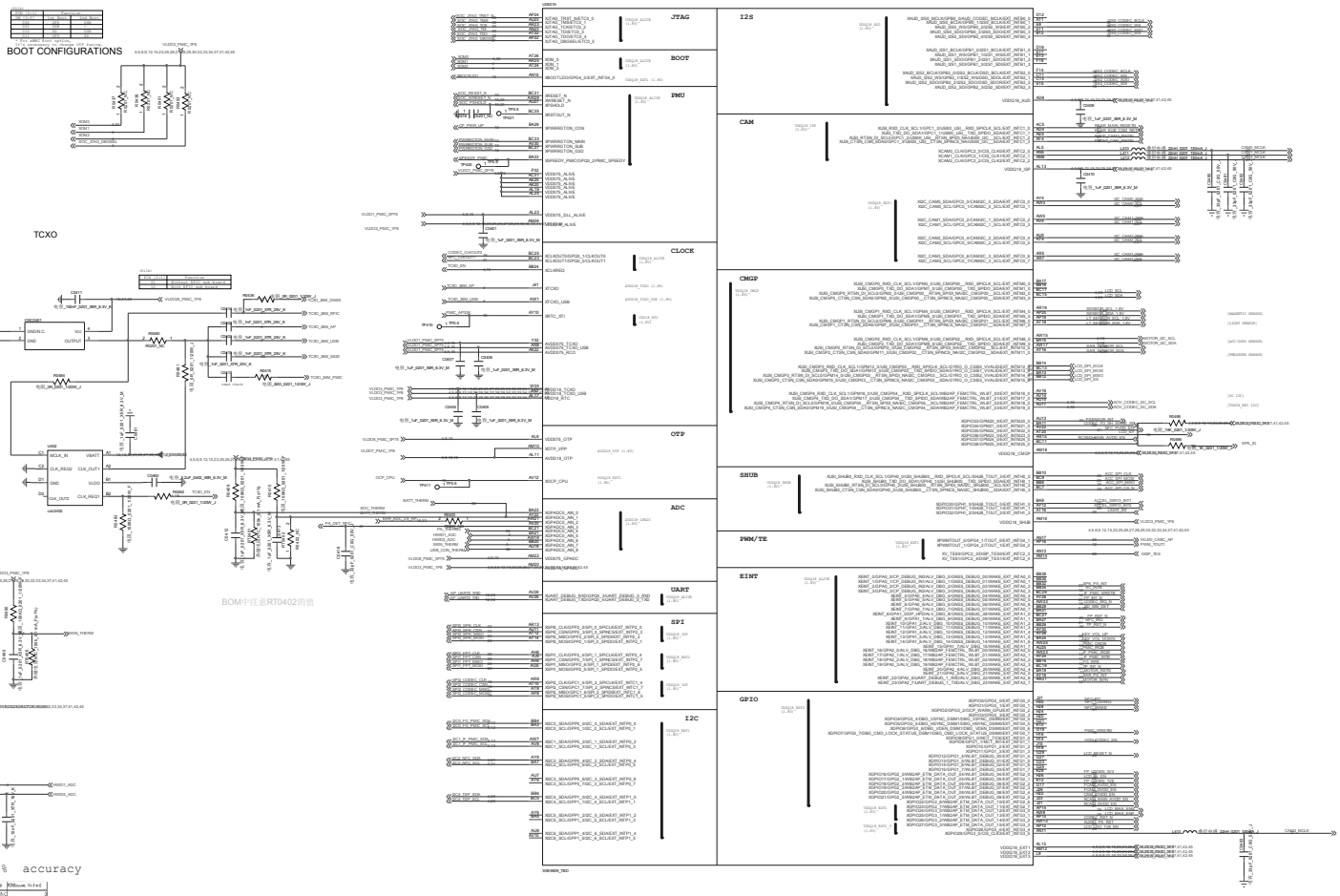

R0411-R0414 need 1% accuracy

Resistor	Input voltage(V)	Target voltage(V)	Bias Current (uA)	Bias Voltage (mV)
20-0.02	0	0.2		3
20-0.02	0.02	0.2	20	3
20-0.20	0.2	1.0	10	20
20-0.40	0.4	1.0	10	40
20-0.40	0.4	1.0	10	40
20-0.60	0.6	1.0	10	60
20-0.77	0.77	1.0	10	77
20-0.80	0.8	1.0	10	80
20-0.80	0.8	1.0	10	80
20-1.00	1.0	1.0	10	100
20-1.00	1.0	1.0	10	100
20-1.25	1.2	1.0	10	120
20-1.37	1.37	1.0	10	137
20-1.40	1.4	1.0	10	140
20-1.60	1.6	1.0	10	160
20-1.75	1.75	1.0	10	175
20-1.80	1.8	1.0	10	180

I2C Pull-up Resistors

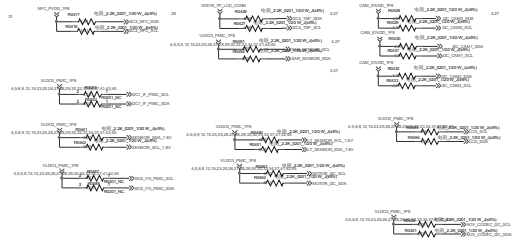

Resistor	Input voltage (mV)	Target voltage (mV)	Bias Current (uA)	Bias Voltage (mV)
1	0.3-0.05	0.25	0.1	0.01
2	0.3-0.05	0.25	0.1	0.01
3	0.30-0.4	0.26	0.1	0.01
4	0.30-0.4	0.26	0.1	0.01
5	0.34-0.48	0.3	0.1	0.01
6	0.56-0.7	0.72	0.1	0.01
7	0.70-0.90	0.84	0.1	0.01
8	0.70-0.90	0.84	0.1	0.01
9	0.80-1.10	0.95	0.1	0.01
10	0.94-1.25	1.1	0.1	0.01
11	0.96-1.27	0.98	0.1	0.01
12	1.00-1.40	1.04	0.1	0.01
13	1.30-1.65	1.56	0.1	0.01
14	1.40-1.70	1.68	0.1	0.01

Size	<TBD>	
Document Number	<Doc>	Rev <Rev>
Date: Friday, January 30, 2015	Sheet 4 of 40	

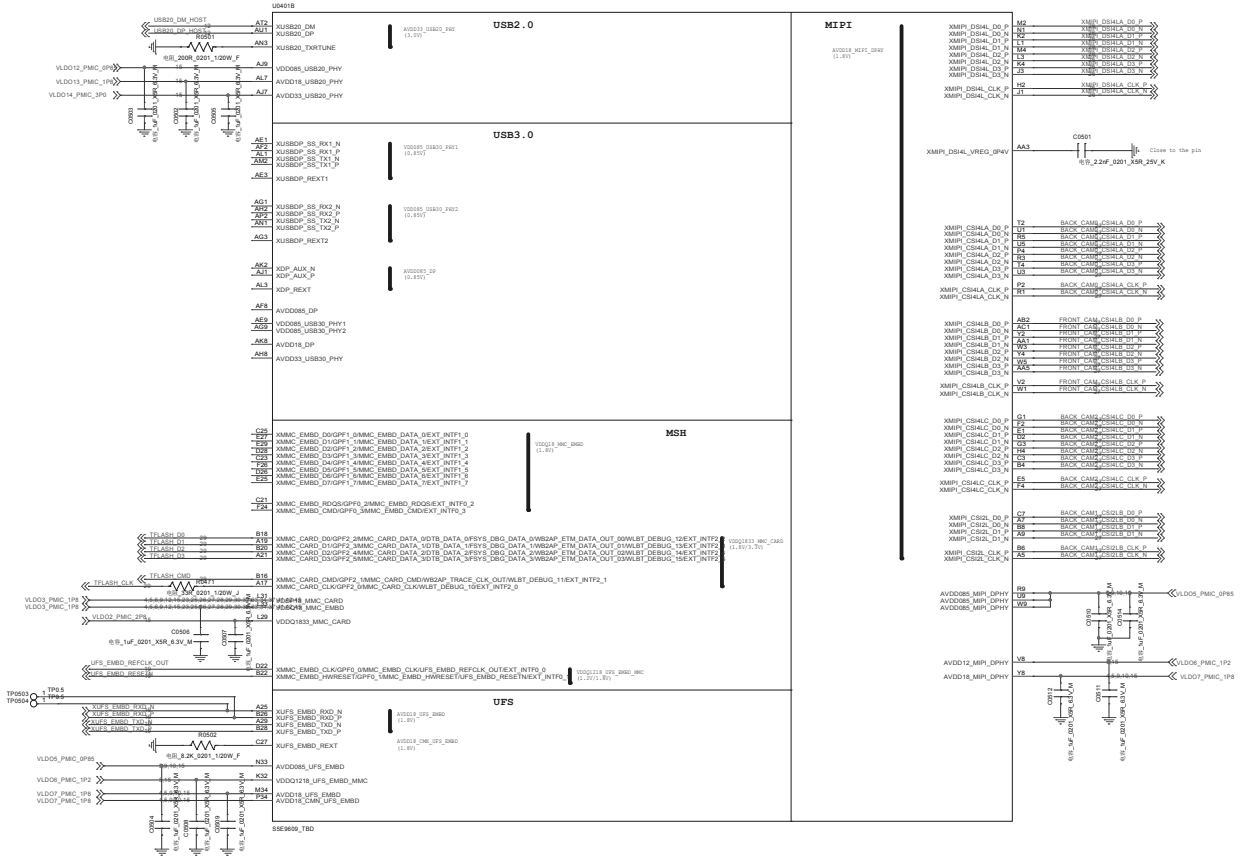

Title	<Title>		
Size D	Document Number <Doc>		Rev <RevCode>
Date: Friday, January 25, 2019	Sheet 5 of 44		

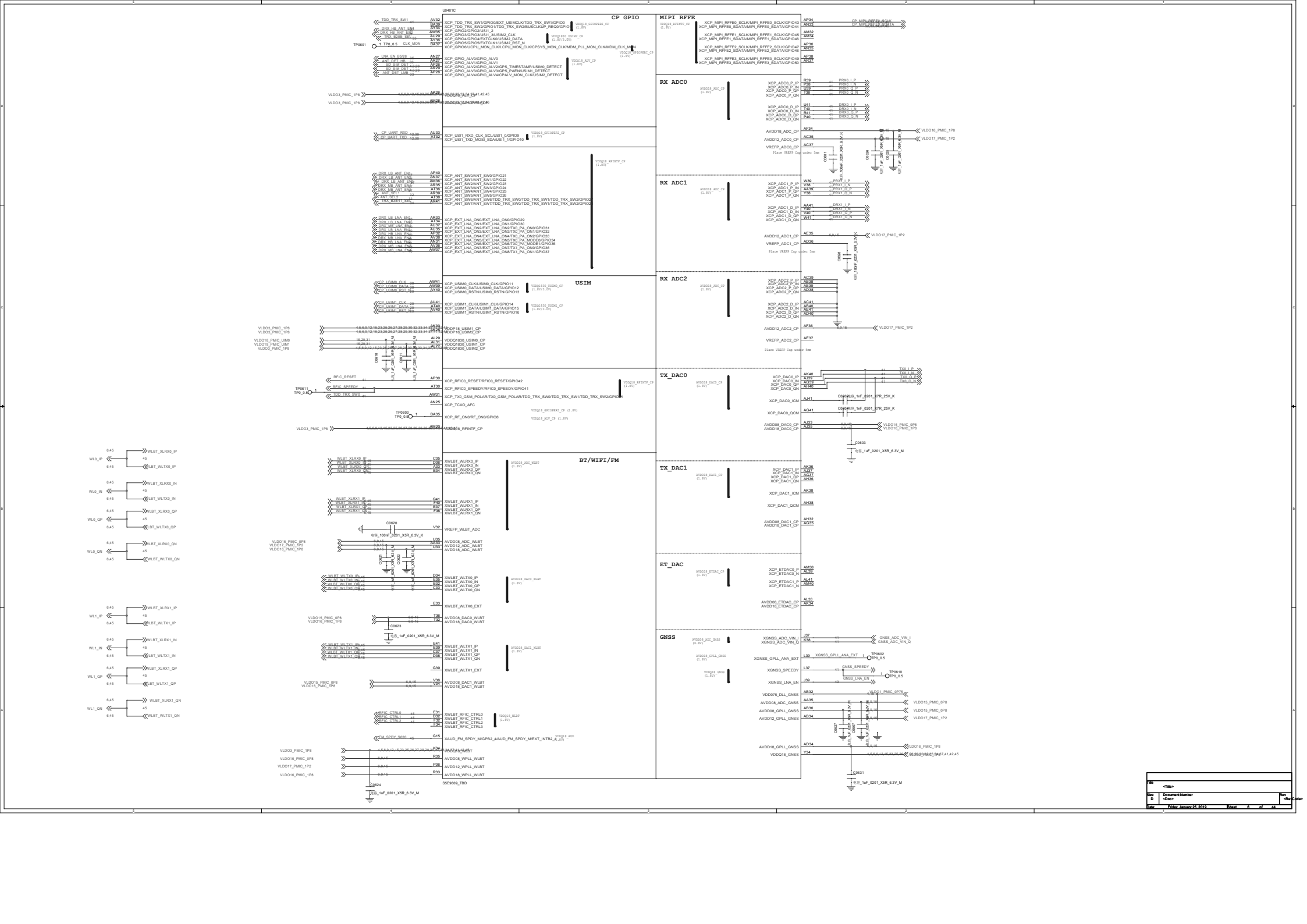
U0401C
CP GPIO
MIPI RFFE
RX ADC0
RX ADC1
RX ADC2
USIM
TX_DAC0
BT/WIFI/FM
TX_DAC1
ET_DAC
GNSS
SSE9609_TBD
Title
<Title>
Size
D
Document Number
<Doc>
Rev
<RevCode>
Date:
Friday, January 25, 2019
Sheet
6
of
44

MSM8953
MIPI

Title	<Title>		
Size D	Document Number <Doc>		Rev <RevCode>
Date: Friday, January 25, 2019	Sheet 7 of 44		

MSM8953
RF

Title	<Title>	
Size D	Document Number <Doc>	Rev <RevCode>
Date: Friday, January 25, 2019	Sheet 8 of 44	

All of DNP is 0201

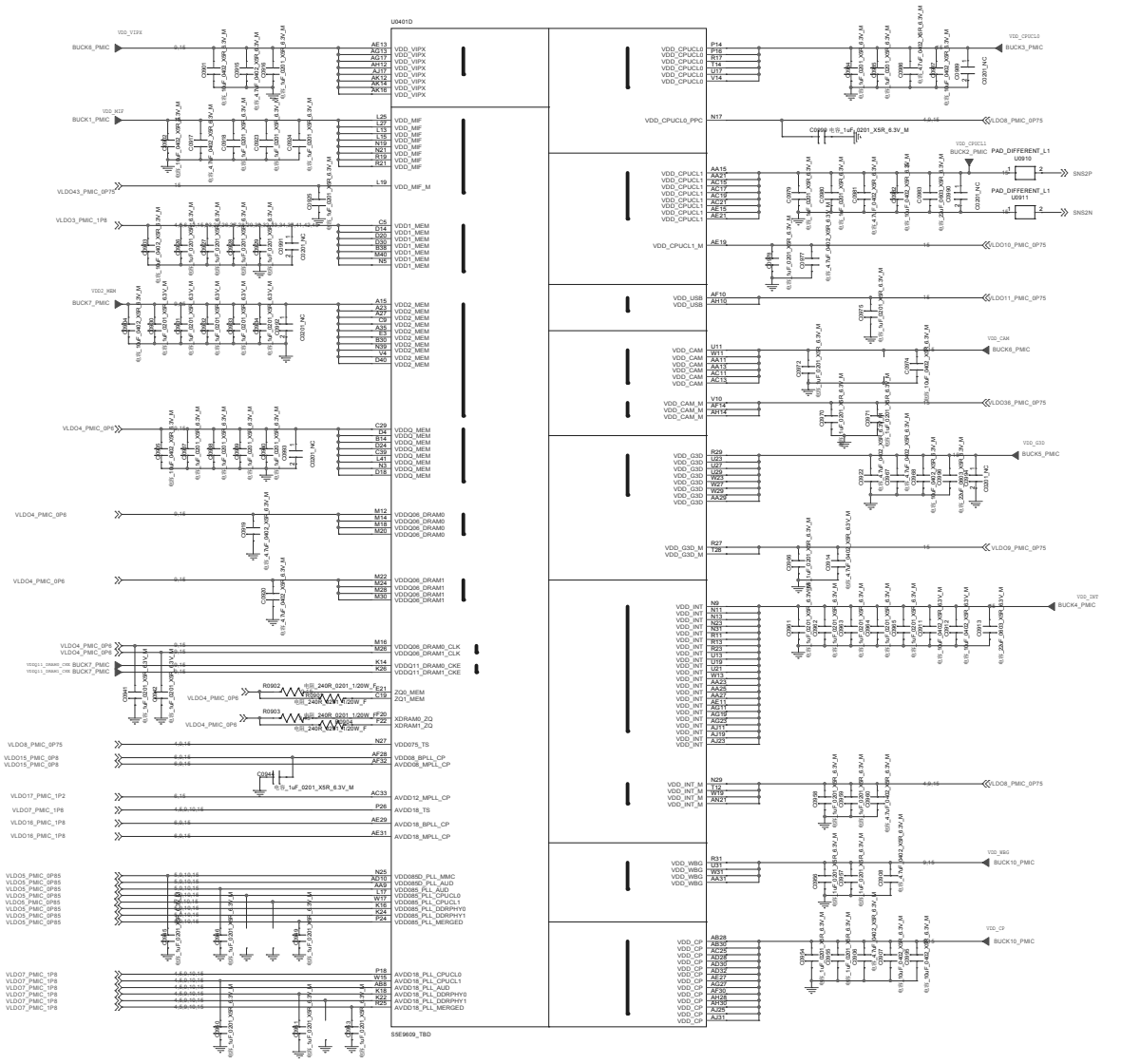

Title	<Title>		
Size D	Document Number <Doc>		Rev <RevCode>
Date: Friday, January 25, 2019	Sheet 9 of 44		

System Power

V_SYSTEM
- V_SYS
- V_SYS_RF
- NFC_VBAT

BUCK Powers

0.75V/1500mA BUCK1_PMIC
- VDD_MIF

0.75V/700mA BUCK2_PMIC
- VDD_CPUCL1

0.75V/180mA BUCK3_PMIC
- VDD_CPUCL0

0.75V/250mA BUCK4_PMIC
- VDD_INT

0.75V/400mA BUCK5_PMIC
- VDD_G3D

0.75V/400mA BUCK6_PMIC
- VDD_CAM
- VDD_VIPX

1.1V/1500mA BUCK7_PMIC
- VDDD2_MEM
- VDDQ11_DRAM0_CKE
- VDDQ11_DRAM1_CKE

1.3V/3000mA BUCK8_PMIC
- BUCK8_PMIC_LDO

2.0V/2000mA BUCK9_PMIC
- BUCK9_PMIC_LDO

0.75V/3000mA BUCK10_PMIC
- VDD_CP
- VDD_WBG

0.75V/300mA VLDO1_PMIC
- VDD075_ALIVE
- VDD075_TCXO
- VDD075_RCO
- VDD075_TCXO_USB
- VDD075_DLL_ALIVE
- VDD075_DLL_GNSS

2.8V/150mA VLDO2_PMIC
- VDDQ1833_MMC_CARD

1.8V/450mA VLDO3_PMIC
- VDD1_MEM
- VDDQ18_EXT1
- VDDQ18_EXT2
- VDDQ18_EXT3
- VDDQ18_SHUB
- VDDQ18_AUD
- VDDQ18_MMC_EMBD
- VDD18_RTC
- VDDQ18_ALIVE
- AVDD18_GPADC
- VDDP18_MMC_CARD
- AVDD18_TCXO
- AVDD18_TCXO_USB
- VDDQ18_ISP
- VDDQ18_CMGP
- VDDQ18_GNSS
- VDDQ18_WLBT
- VDDQ18_RFINTF_CP
- VDDQ18_GPIOPERI_CP
- VDDP18_USIM1_CP
- VDDP18_USIM2_CP
- VDDQ18_ALV_CP
- VDDQ1830_USIM2_CP
- VDD_1P8_CP (RFIC)
- VDD18_IO_WLBT (WLBT)
- VDDQ18_I2C
- VDDQ18_PERI_AP
- VDD_MIC_1V8
- VDD_1P8_CAM

0.67/600mA VLDO4_PMIC
- VDDQ_MEM
- VDDQ06_DRAM0
- VDDQ06_DRAM1
- VDDQ06_DRAM0_CLK
- VDDQ06_DRAM1_CLK

0.85/300mA VLDO5_PMIC
- VDD085_PLL_AUD
- VDD085D_PLL_AUD
- VDD085_PLL_CPUCL0
- VDD085_PLL_CPUCL1
- VDD085_PLL_DDRPHY0
- VDD085_PLL_DDRPHY1
- VDD085_PLL_MERGED
- VDD085D_PLL_MMC
- AVDD085_MIPI_DPHY
- AVDD085_UFS_EMBD

VLDO5_PMIC_DP85 — 6.0,16 — C 0603 — 6.15_0ohf_0402_X9R_0.1V_M

1.2V/150mA VLDO6_PMIC
- AVDD12_MIPI_DPHY
- VDDQ1218_UFS_EMBD_MMC

1.8V/150mA VLDO7_PMIC
- AVDD18_PLL_AUD
- AVDD18_PLL_CPUCL0
- AVDD18_PLL_CPUCL1
- AVDD18_PLL_DDRPHY0
- AVDD18_PLL_DDRPHY1
- AVDD18_PLL_MERGED
- AVDD18_OTP
- AVDD18_MIPI_DPHY
- AVDD18_CMN_UFS_EMBD
- AVDD18_UFS_EMBD
- AVDD18_TS

VLDO7_PMIC_1P8 — 4.5,9,15 — C 0603

0.75V/300mA VLDO8_PMIC
- VDD_INT_M
- VDD_CPUCL0_PPC
- VDD075_GPADC
- VDD075_TS
- VDD075_OTP

0.75V/150mA VLDO9_PMIC
- VDD_G3D_M

0.75V/150mA VLDO10_PMIC
- VDD_CPUCL1_M

0.75V/300mA VLDO11_PMIC
- VDD_USB

0.85V/300mA VLDO12_PMIC
- VDD085_USB20

1.8V/150mA VLDO13_PMIC
- AVDD18_USB20_PHY

3.0V/150mA VLDO14_PMIC
- AVDD33_USB20_PHY

0.75V/150mA VLDO36_PMIC
- VDD_CAM_M

0.75V/150mA VLDO43_PMIC
- VDD_MIF_M

CP Power

0.8V/150mA VLDO15_PMIC
- AVDD08_DAC0_CP
- AVDD08_DAC1_CP
- AVDD08_ETDAC_CP
- AVDD08_MPLL_CP
- VDD08_BPLL_CP
- AVDD08_DAC0_WLBT
- AVDD08_DAC1_WLBT
- AVDD08_ADC_WLBT
- AVDD08_WPLL_WLBT
- AVDD08_ADC_GNSS
- AVDD08_GPLL_GNSS

1.8V/150mA VLDO16_PMIC
- AVDD18_ADC_CP
- AVDD18_DAC0_CP
- AVDD18_DAC1_CP
- AVDD18_ETDAC_CP
- AVDD18_MPLL_CP
- AVDD18_BPLL_CP
- AVDD18_ADC_WLBT
- AVDD18_DAC0_WLBT
- AVDD18_DAC1_WLBT
- AVDD18_WPLL_WLBT
- AVDD18_GPLL_GNSS

1.2V/150mA VLDO17_PMIC
- AVDD12_ADC0_CP
- AVDD12_ADC1_CP
- AVDD12_ADC2_CP
- AVDD12_MPLL_CP
- AVDD12_ADC_WLBT
- AVDD12_WPLL_WLBT
- AVDD12_GPLL_GNSS

1.8V/2.85V/150mA VLDO18_PMIC
- VDDQ1830_USIM0_CP

1.8V/2.85V/150mA VLDO19_PMIC
- VDDQ1830_USIM1_CP

General Peripheral Power

1.8V/450mA VLDO33_PMIC
- VDD_UFS_1P8

2.95V/800mA VLDO34_PMIC
- VDD_UFS_2P95

3.3V/800mA VLDO35_PMIC
- VDD_T_FLASH_3V0

3.3V/300mA VLDO37_PMIC
- VDD_FPS_1P8

3.0V/300mA VLDO38_PMIC
- REAR_CAM_AFVCC_2P8

1.8V/150mA VLDO39_PMIC
- VDD18_LCD1

2.8V/150mA VLDO40_PMIC
- VDD_SENSOR_2P8

3.0V/150mA VLDO41_PMIC
- PM_CAM_FRT_AVDD_2P8

1.8V/300mA VLDO42_PMIC
- VDD_CODEC_1P8

1.2V/300mA VLDO44_PMIC
- PM_CAM_REAR_DVDD_1P2

RF & S620 POWER

1.8V/150mA VLDO20_PMIC
- VDD18_TCXO
- VRF18_GNSS (RFIC)

1.0V/300mA VLDO21_PMIC
- DVDD10_RF (RFIC)

1.2V/300mA VLDO22_PMIC
- VRF_TRX_1P2 (RFIC)

1.2V/450mA VLDO23_PMIC
- VRF12_TRX_LO (RFIC)

1.8V/300mA VLDO24_PMIC
- VRF18_TRX (RFIC)

2.8V/150mA VLDO25_PMIC
- VRF28

1.1V/150mA VLDO26_PMIC
- VRF11_GNSS (RFIC)

1.1V/450mA VLDO27_PMIC
- AVDD11_BTFM (S620)
- AVDD11_RF

3.2V/150mA VLDO28_PMIC
- AVDD12_LO (S620)

1.8V/150mA VLDO29_PMIC
- AVDD18_ANA (S620)

1.8V/300mA VLDO30_PMIC
- AVDD18_DA (S620)

3.3V/600mA VLDO31_PMIC
- AVDD33_WL0 (S620)

3.3V/600mA VLDO32_PMIC
- AVDD33_WL1 (S620)

Title	<Title>		
Size D	Document Number <Doc>		Rev <RevCode>
Date: Friday, January 25, 2019	Sheet 10 of 44		

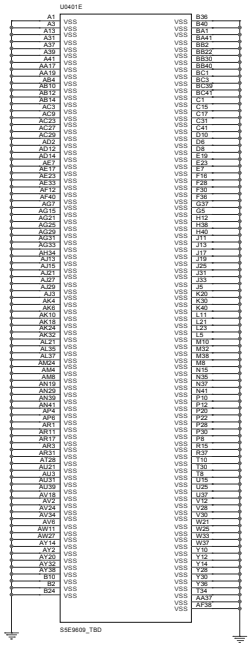

Title	<Title>		
Size D	Document Number <Doc>		Rev <RevCode>
Date: Friday, January 25, 2019	Sheet 11 of 44		

IF PMIC

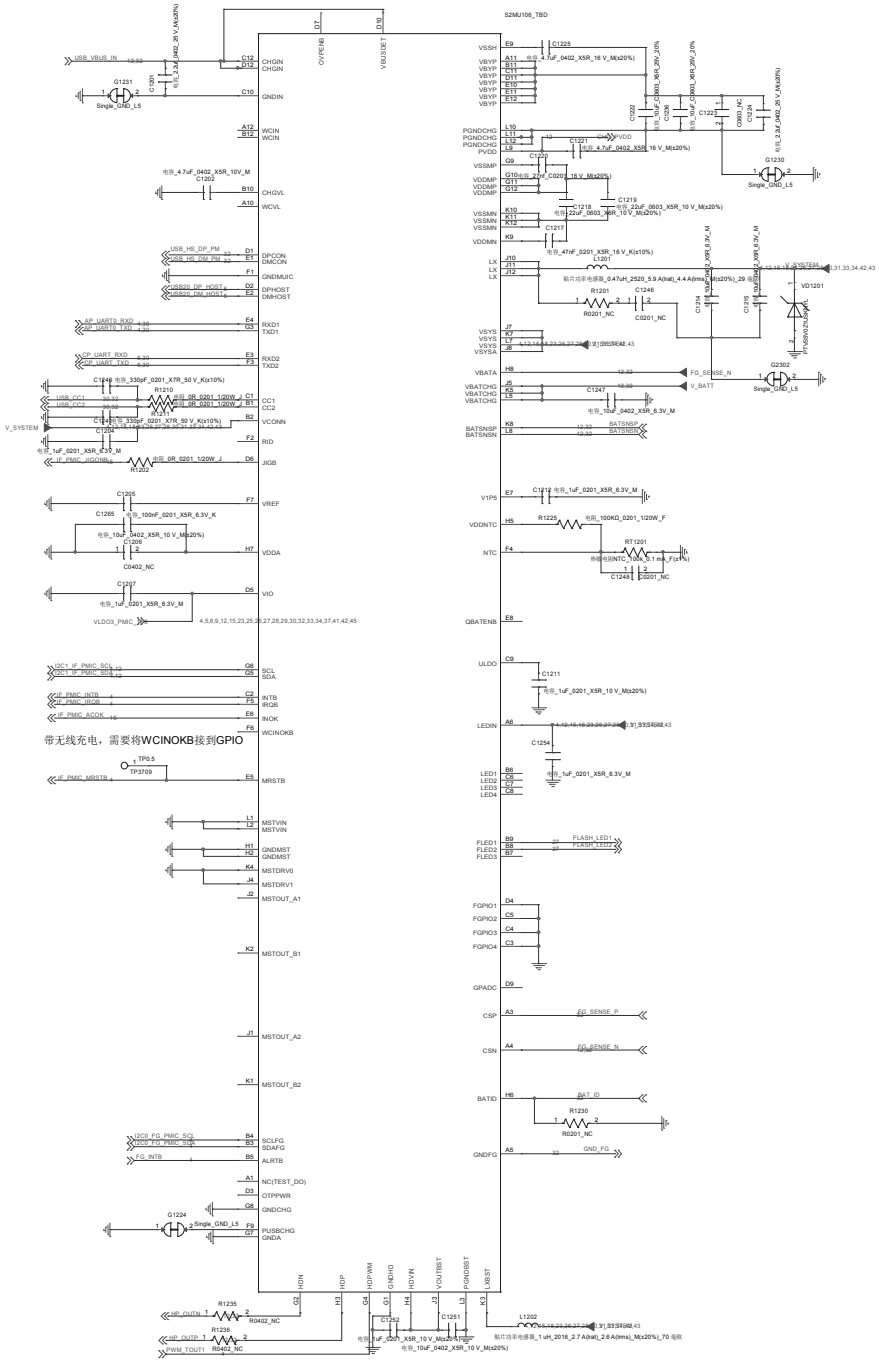

Slave Charge IC

C1228 need change to 4.7uF

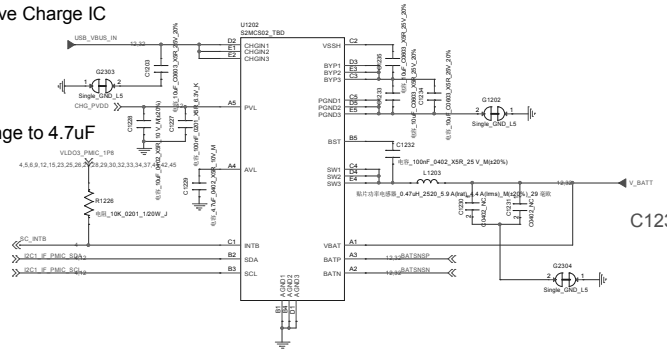

C1231---- NC

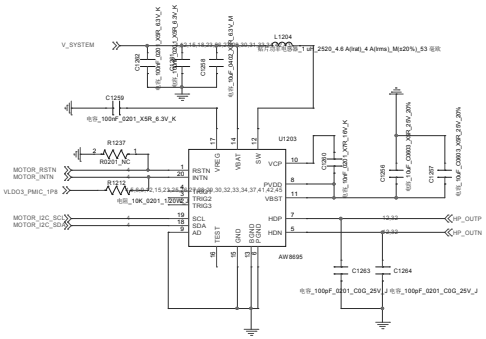

address of AW8695 is
AD:L OX5A H 0X5B

Title	<Title>		
Size D	Document Number <Doc>		Rev <RevCode>
Date: Friday, January 25, 2019	Sheet 12 of 44		

Title	<Title>	
Size D	Document Number <Doc>	Rev <RevCode>
Date: Friday, January 25, 2019	Sheet 13 of 44	

Title	<Title>	
Size D	Document Number <Doc>	Rev <RevCode>
Date: Friday, January 25, 2019	Sheet 14 of 44	

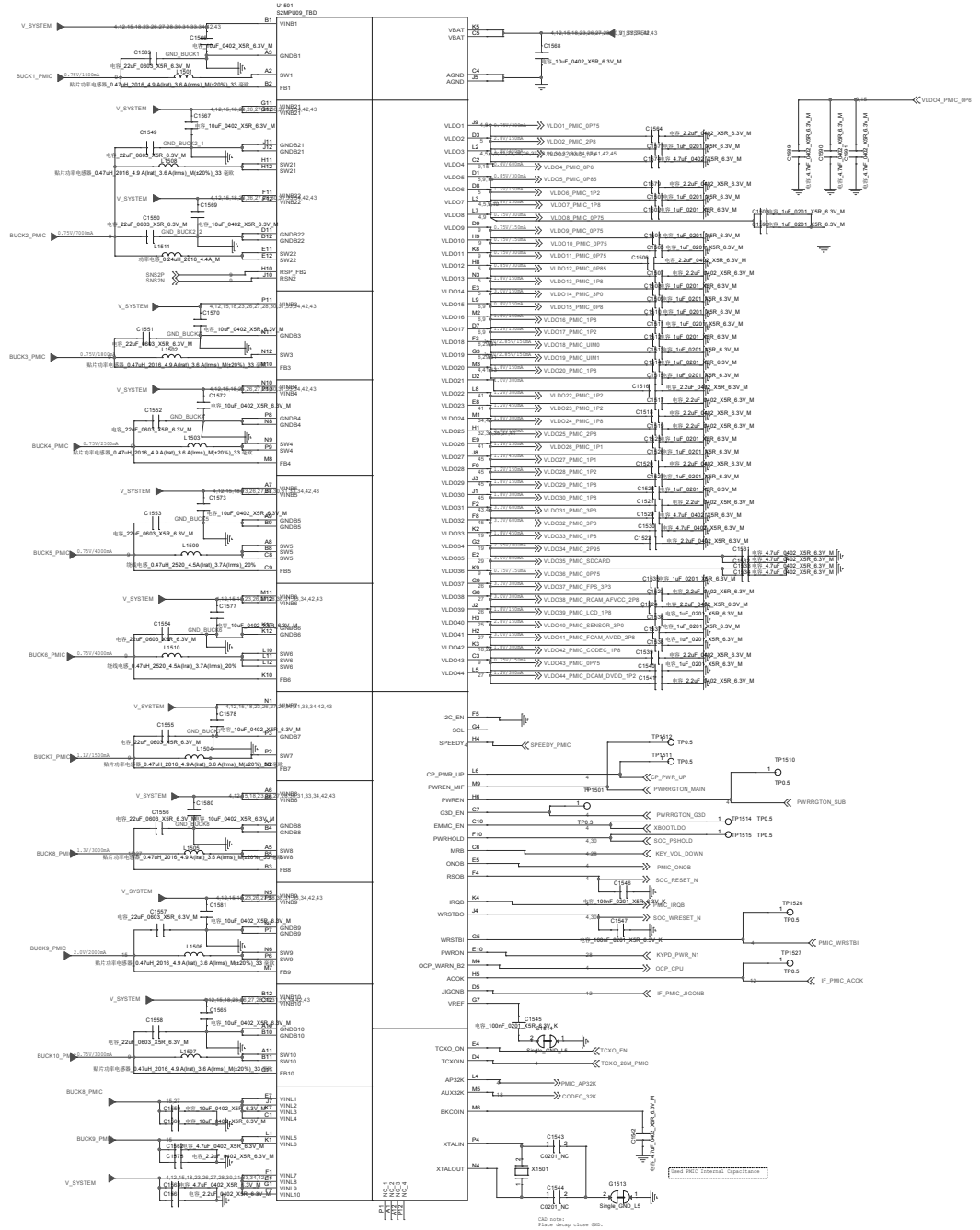

Title	QL1509_MB_V1.0
Size: D	Document Number: <Doc>
Rev	V1.0
Date: Friday, January 25, 2019	Sheet 16 of 44

Title	<Title>
Size A	Document Number <Doc>
Rev	<RevCode>
Date:	Friday, January 25, 2019
Sheet	16 of 44

Title	<Title>	
Size D	Document Number <Doc>	Rev <RevCode>
Date: Friday, January 25, 2019	Sheet 17 of 44	

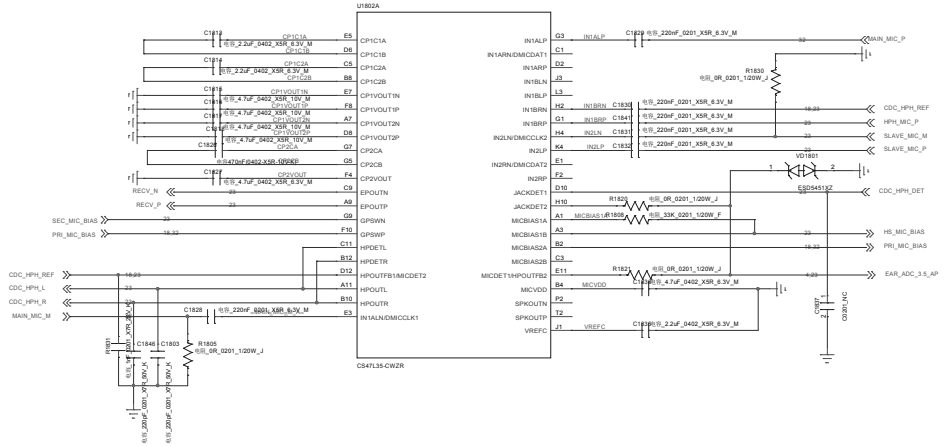

EVB 与软件确认是否用这组I2C

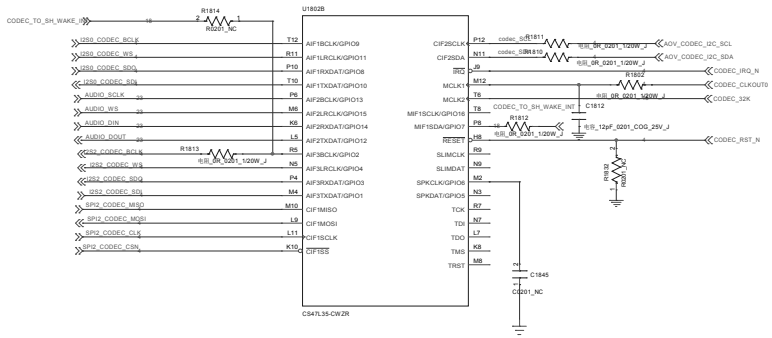

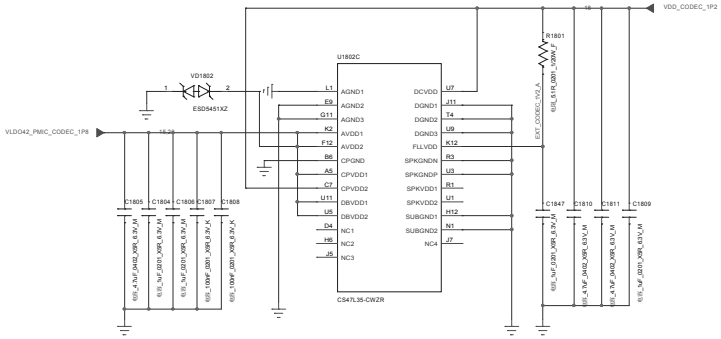

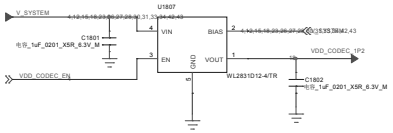

VDD_CODEC 1.2v

Company: Huaqin		
Block Title	Test Points	
Project	Teller	Rev 1.0
Date: Friday, January 25, 2019	Sheet 18 of 44	

UFS2.0

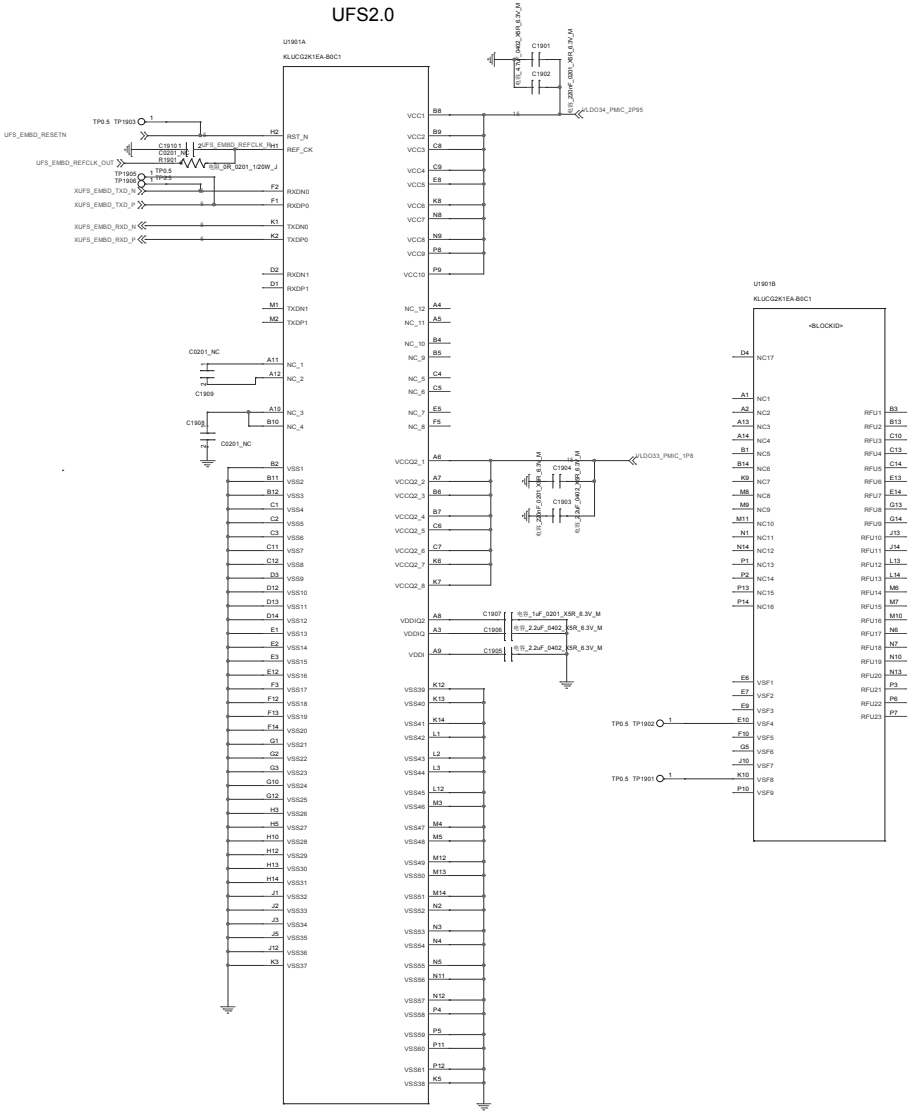

CAD Notes :

Place TP close to the via to minimize stub length.

Title	<Title>		
Size D	Document Number <Doc>		Rev <RevCode>
Date: Friday, January 25, 2019	Sheet 19 of 44		

CC Logic??

Title	<Title>	
Size D	Document Number <Doc>	Rev <RevCode>
Date: Friday, January 25, 2019	Sheet 20 of 44	

Title	<Title>	
Size D	Document Number <Doc>	Rev <RevCode>
Date: Friday, January 25, 2019	Sheet 21 of 44	

Title	<Title>
Size A	Document Number <Doc>
Rev	<RevCode>
Date:	Friday, January 25, 2019
Sheet	22 of 44

副MIC

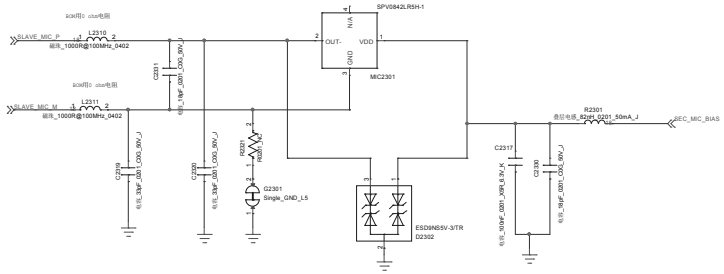

Receiver

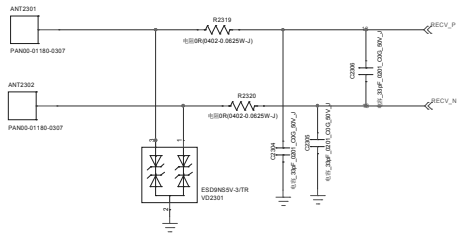

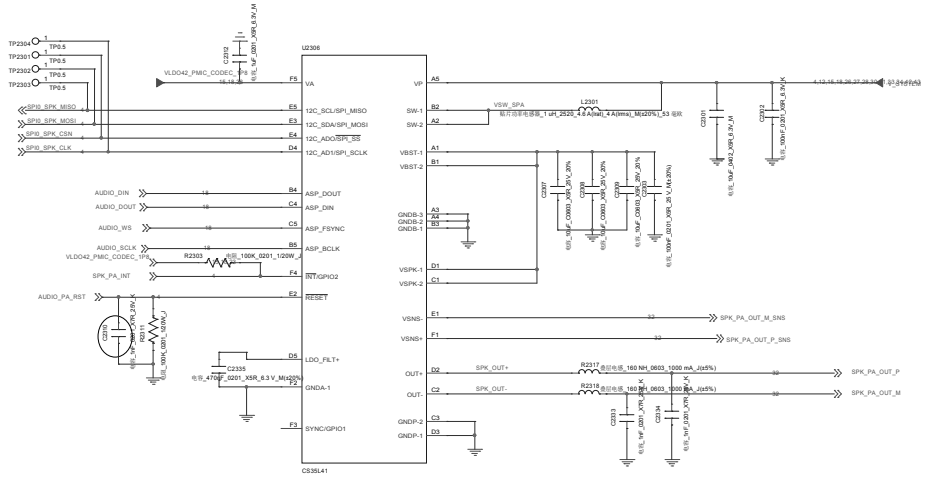

AUDIO JACK

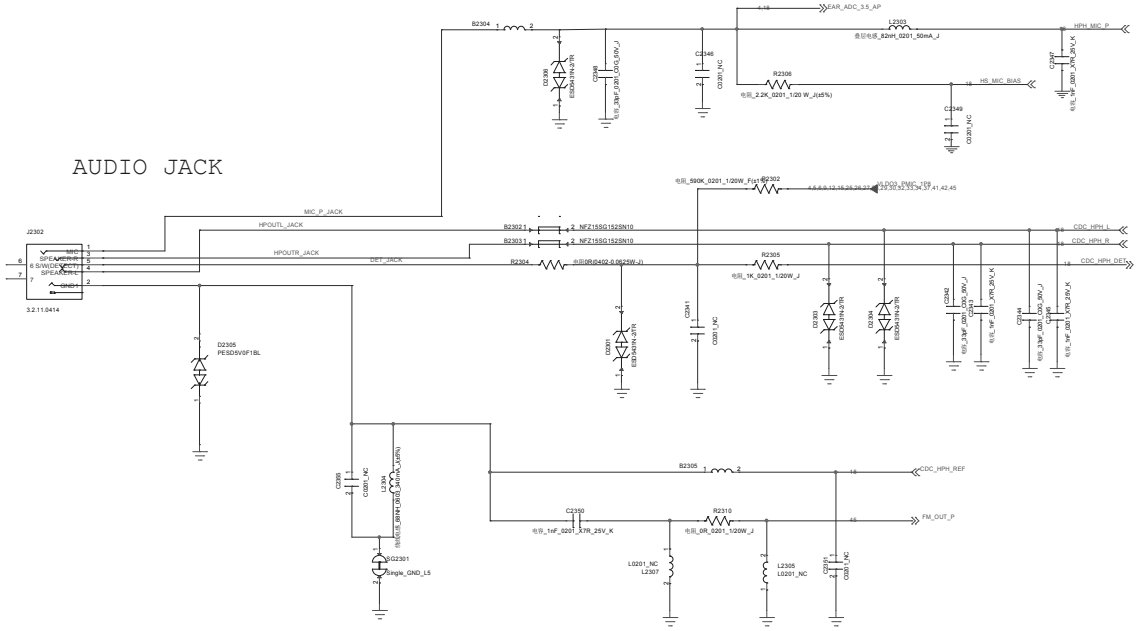

Title	<Title>		
Size D	Document Number <Doc>		Rev <RevCode>
Date: Friday, January 25, 2019	Sheet 23 of 44		

Title	<Title>	
Size D	Document Number <Doc>	Rev <RevCode>
Date: Friday, January 25, 2019	Sheet 24 of 44	

ACCELEROMETER+GYRO

I2C ADDRESS 0X68 0b1101000

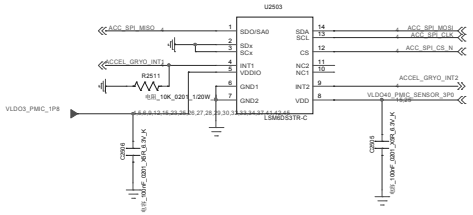

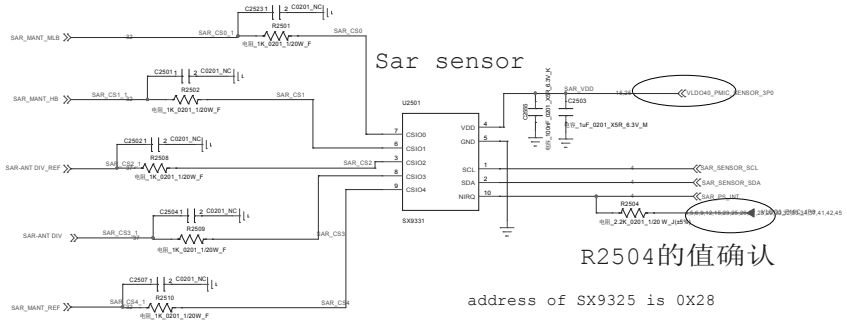

R2504的值确认

address of SX9325 is 0X28

Magnetic Sensor

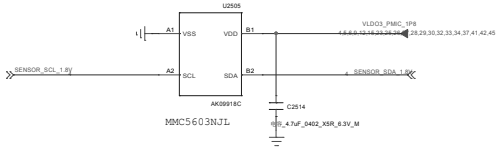

MMC5603NJL

address of AK09918 is 0X0C
MMC5603NJL is 0X30

ALS/P SENSOR CONN

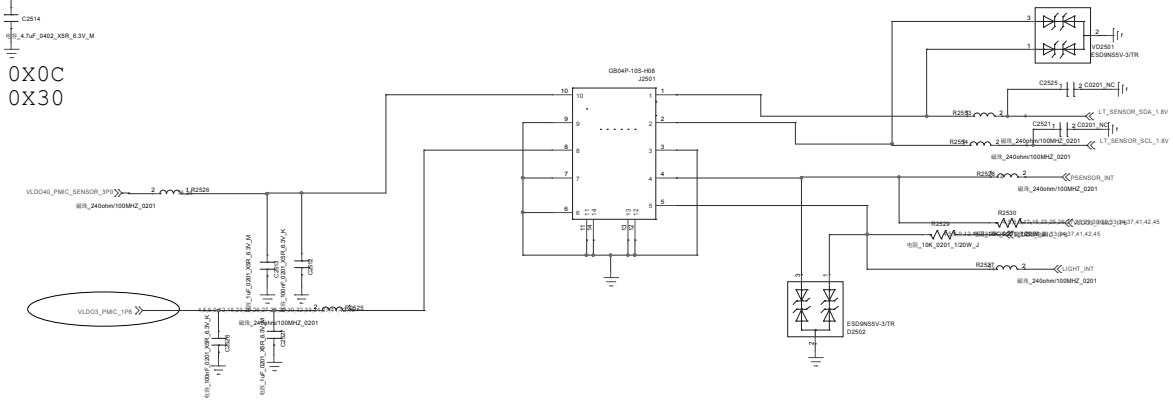

VLDO40_PMIC_SENSOR_3P0 need Software change to 3.0V

Title	<Title>		
Size D	Document Number <Doc>		Rev <RevCode>
Date: Friday, January 25, 2019	Sheet 25 of 44		

LCD MIPI Common Mode Filter

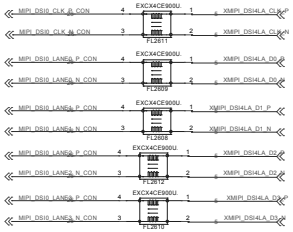

LCD/TP-Connector

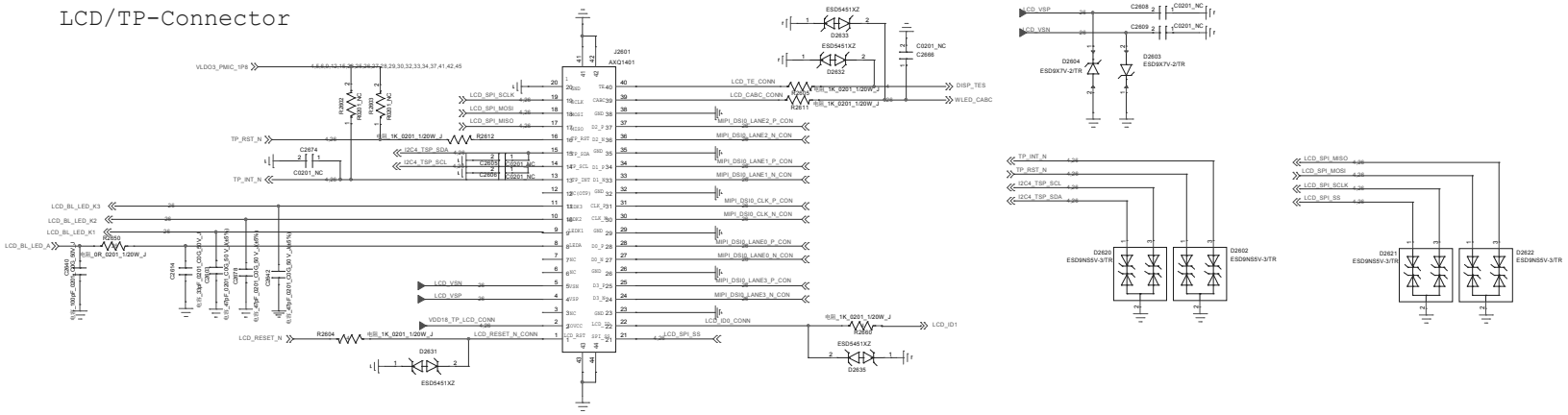

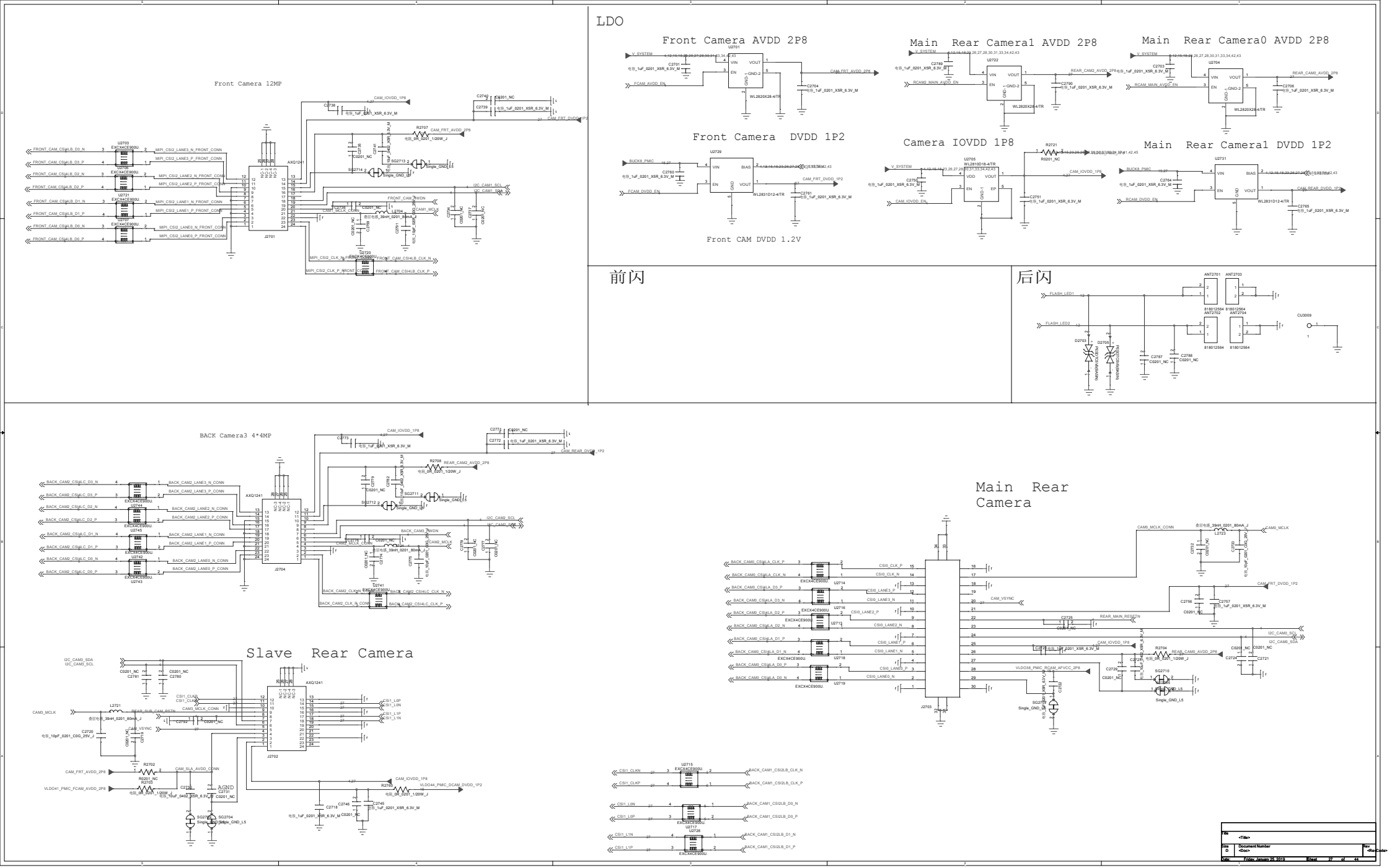
Front Camera 12MP
LDO
Front Camera AVDD 2P8
Main Rear Camera1 AVDD 2P8
Main Rear Camera0 AVDD 2P8
Front Camera DVDD 1P2
Camera IOVDD 1P8
Main Rear Camera1 DVDD 1P2
Front CAM DVDD 1.2V
前闪
后闪
BACK Camera3 4*4MP
Main Rear Camera
Slave Rear Camera

音量键&开关机键

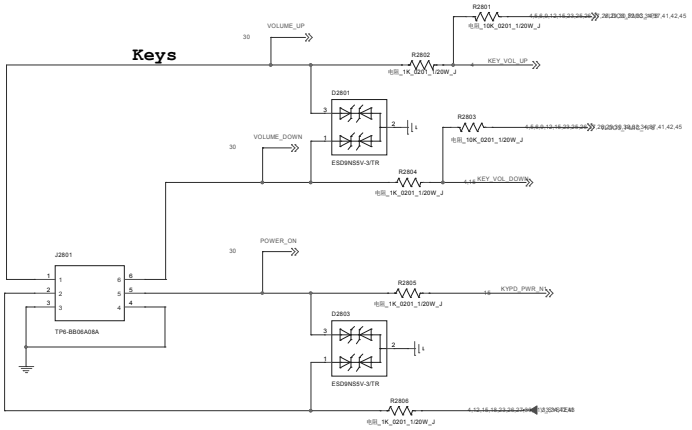

Title	<Title>		
Size D	Document Number <Doc>		Rev <RevCode>
Date: Friday, January 25, 2019	Sheet 28 of 44		

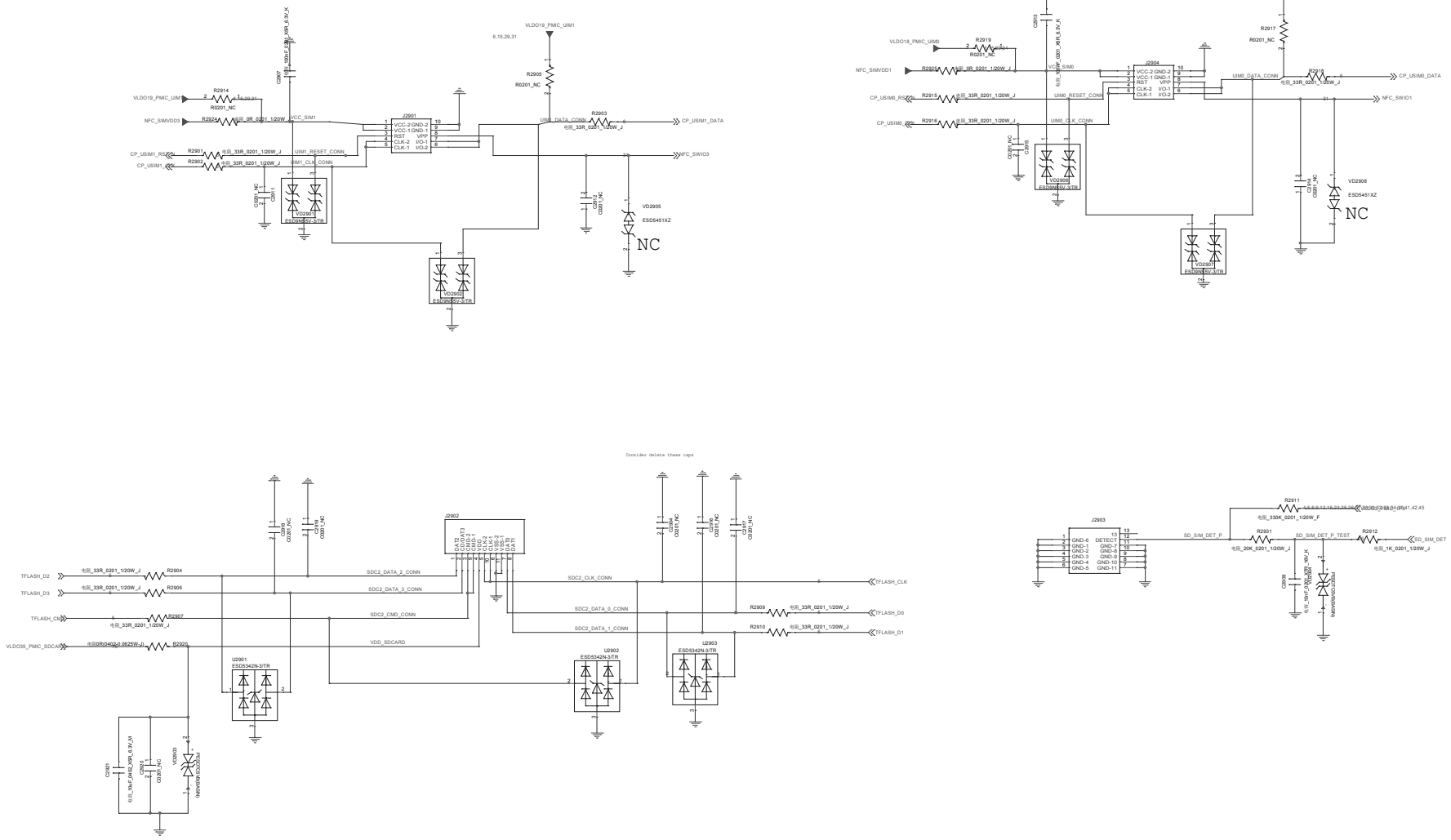

Title	<Title>		
Size D	Document Number <Doc>		Rev <RevCode>
Date: Friday, January 25, 2019	Sheet 29 of 44		

JTAG CONNECTOR
Lenovo SW debug request regarding moto

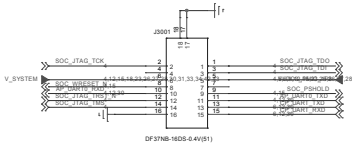

NO WATCH DOG

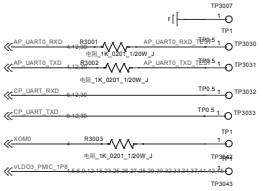

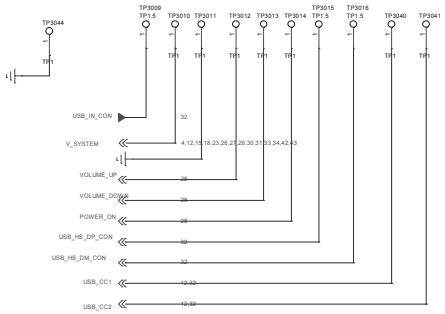

PCBA AUTOMATIC TEST point

接地弹片 TOP

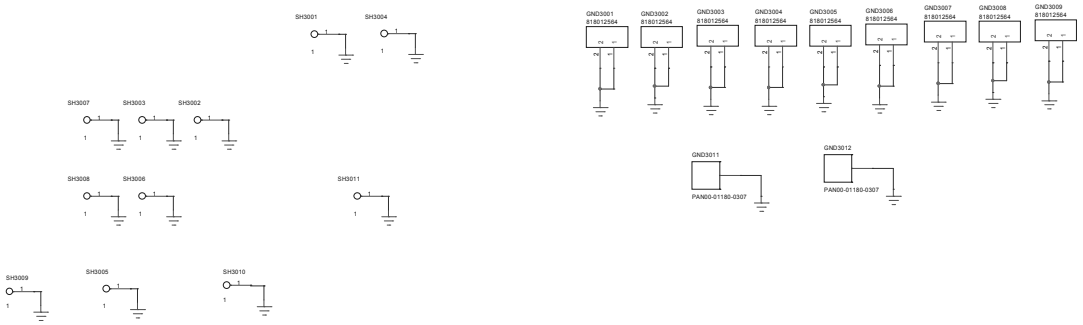

Title	<Title>		
Size D	Document Number <Doc>		Rev <RevCode>
Date: Friday, January 25, 2019	Sheet 30 of 44		

NFC

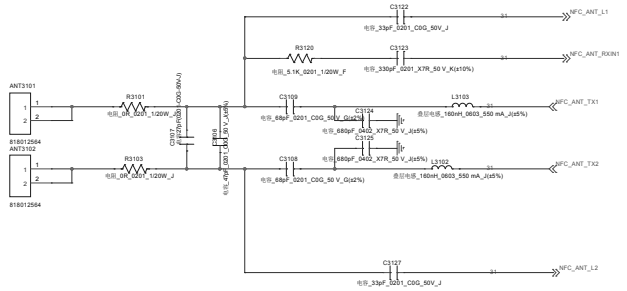

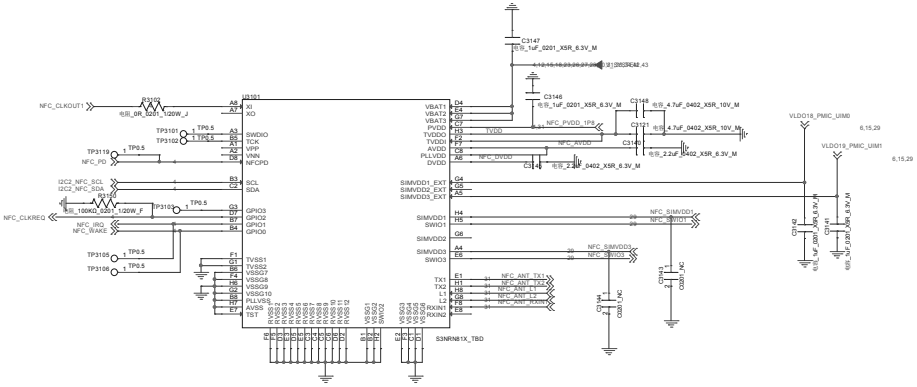

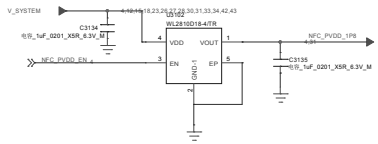

U3102: BOM中用1.8V的LDO

Title	<Title>		
Size D	Document Number <Doc>		Rev <RevCode>
Date: Friday, January 25, 2019	Sheet 31 of 44		

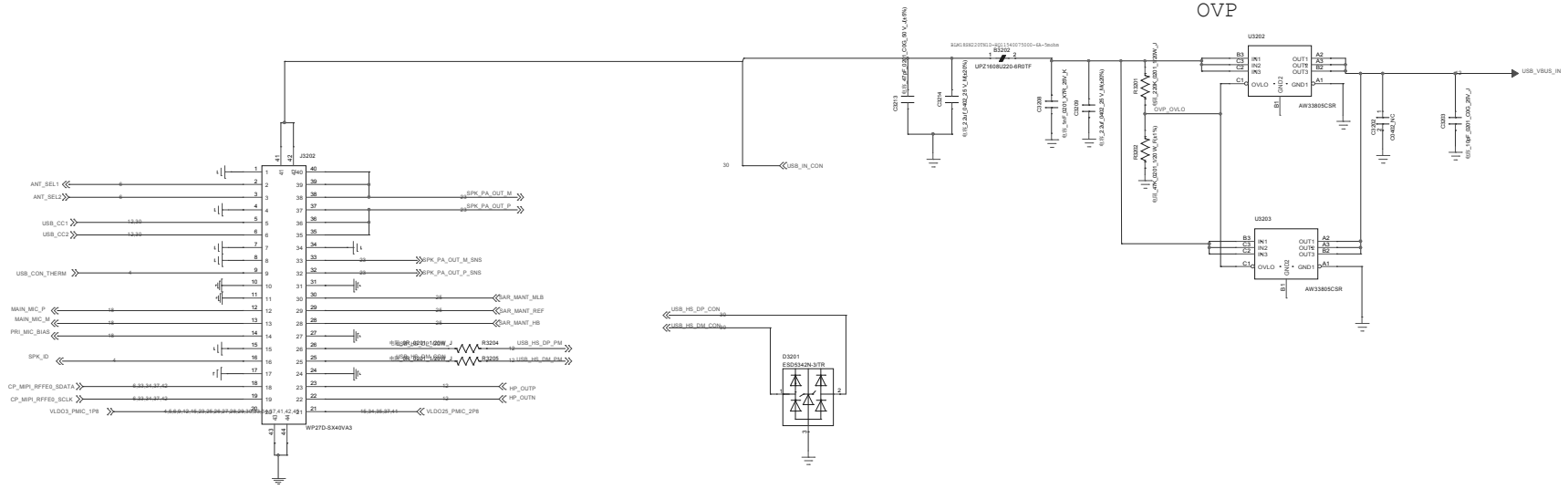

Battery Connector

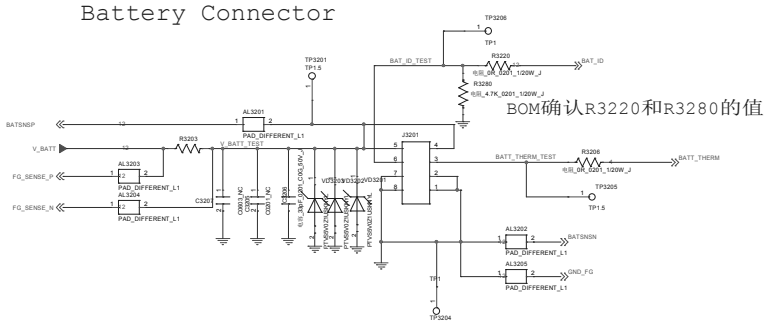

Title	<Title>	
Size D	Document Number <Doc>	Rev <RevCode>
Date: Friday, January 25, 2019	Sheet 32 of 44	

PRIMARY_ANTENNA

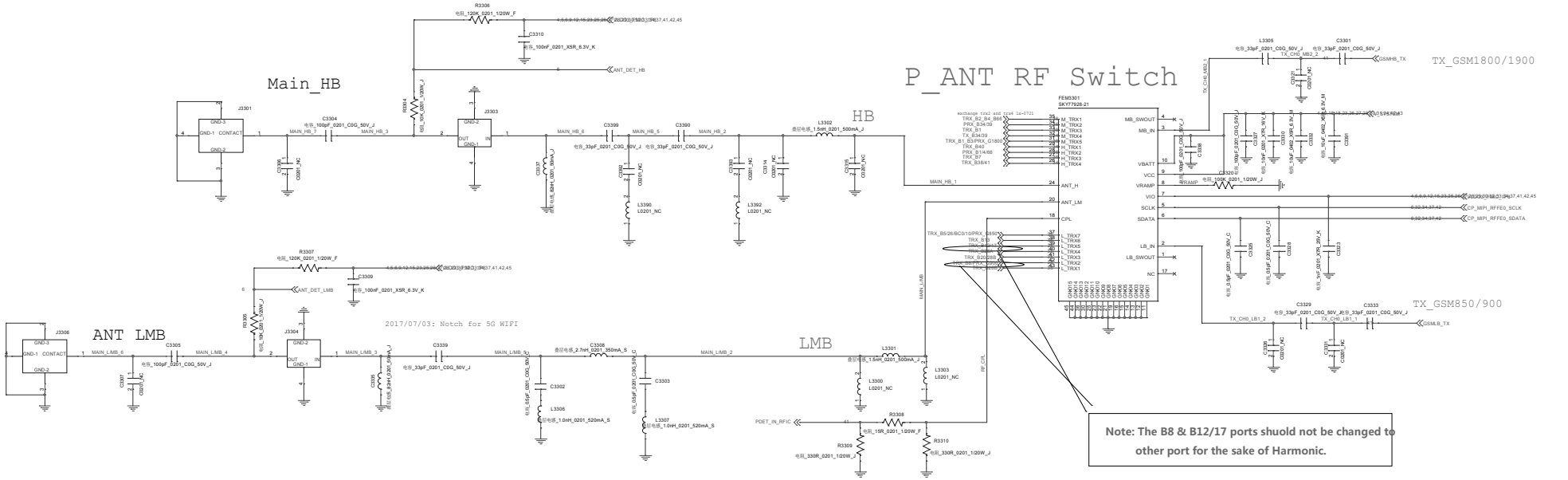

Company: Huaqin	
Block Title	PRIMARY_ANTENNA
Project	Telfer
Rev	1.0
Date:	Friday, January 25, 2019
Sheet	33 of 32

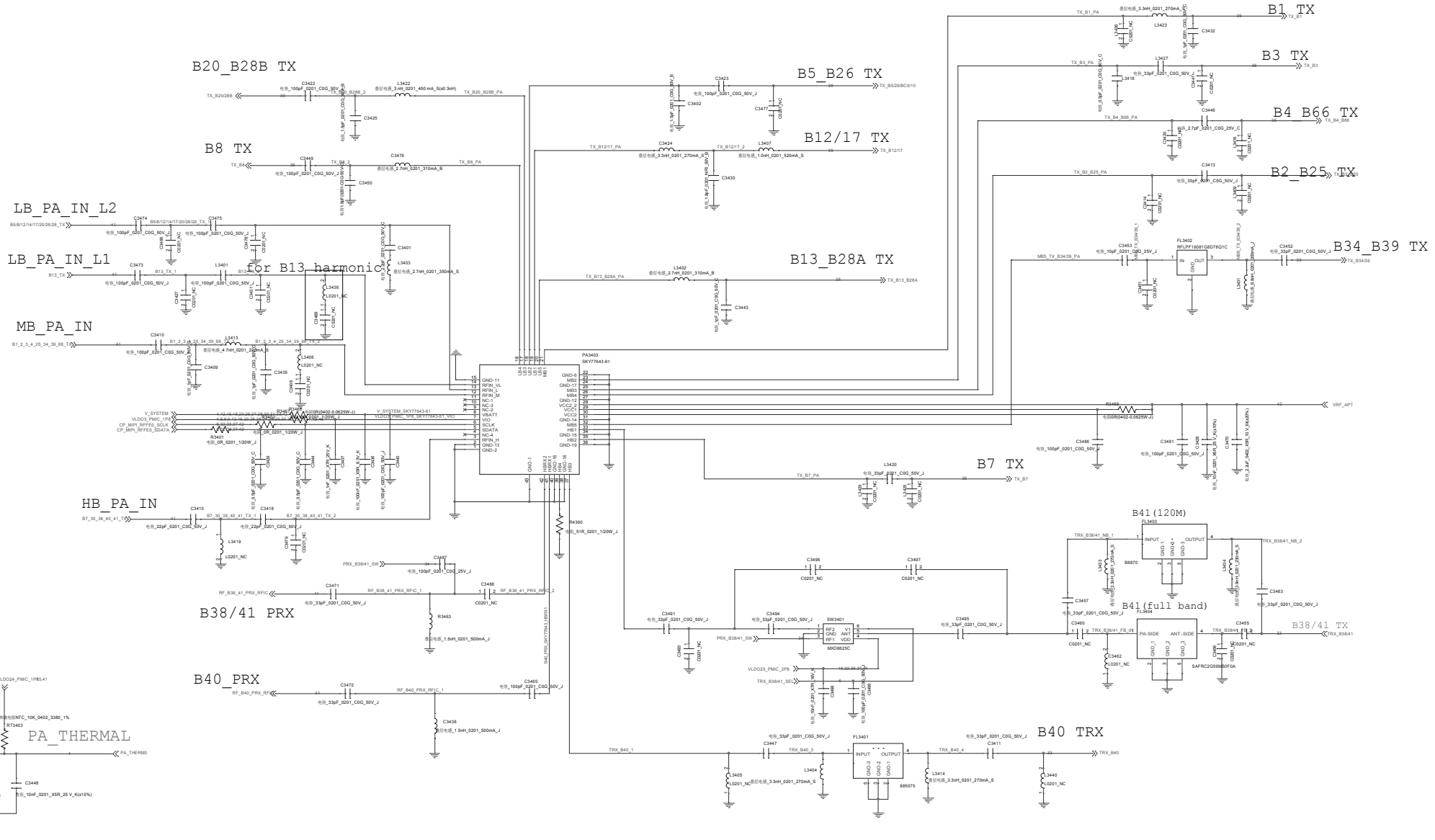

Company: Huaqin			
Block Title	PA & PA THERMAL		
Project	Telfer	Rev	1.0
Date:	Friday, January 25, 2019	Sheet 34 of 33	

TRX_LB

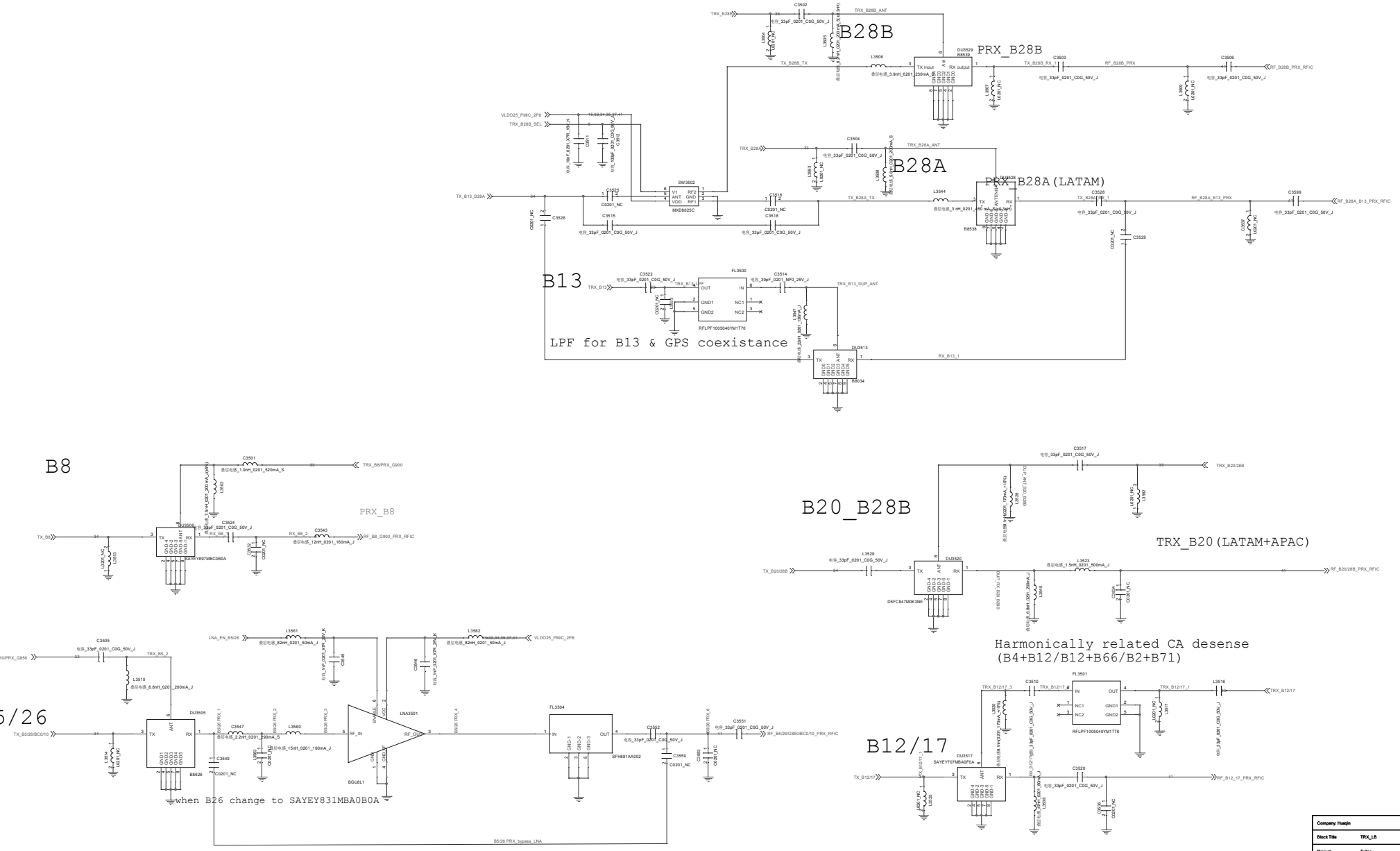
B28B
PRX_B28B
B28A
PRX_B28A(LATAM)
B13
LPF for B13 & GPS coexistance
B8
PRX_B8
B20_B28B
TRX_B20(LATAM+APAC)
Harmonically related CA desense
(B4+B12/B12+B66/B2+B71)
B5/26
when B26 change to SAYEY831MBA0B0A
B12/17
Company: Huaqin
Block Title TRX_LB
Project Telfer
Rev 1.0
Date: Friday, January 25, 2019
Sheet 35 of 34

TRX_MHB

B2 DPX

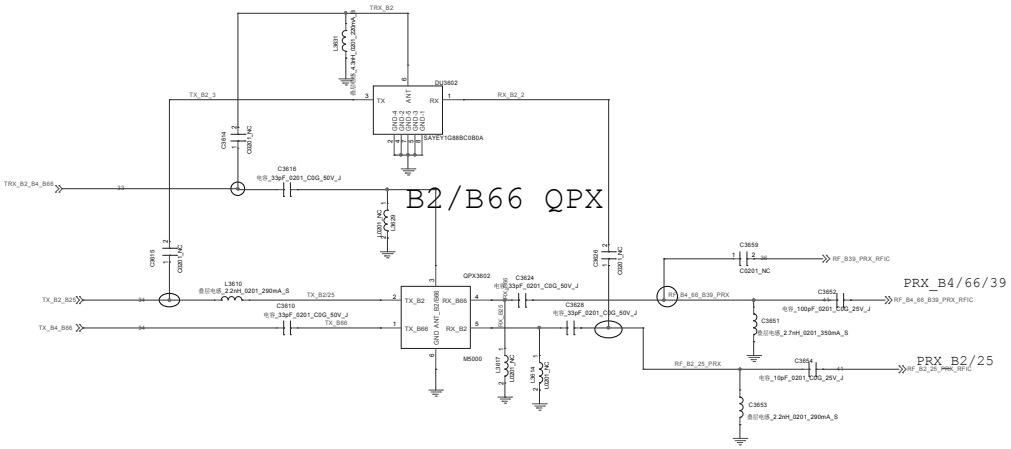

B34/39 PRx

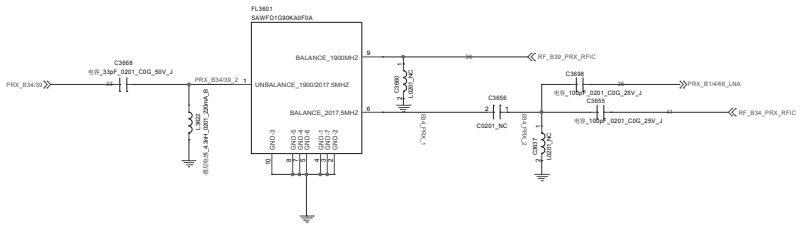

B3 DPX

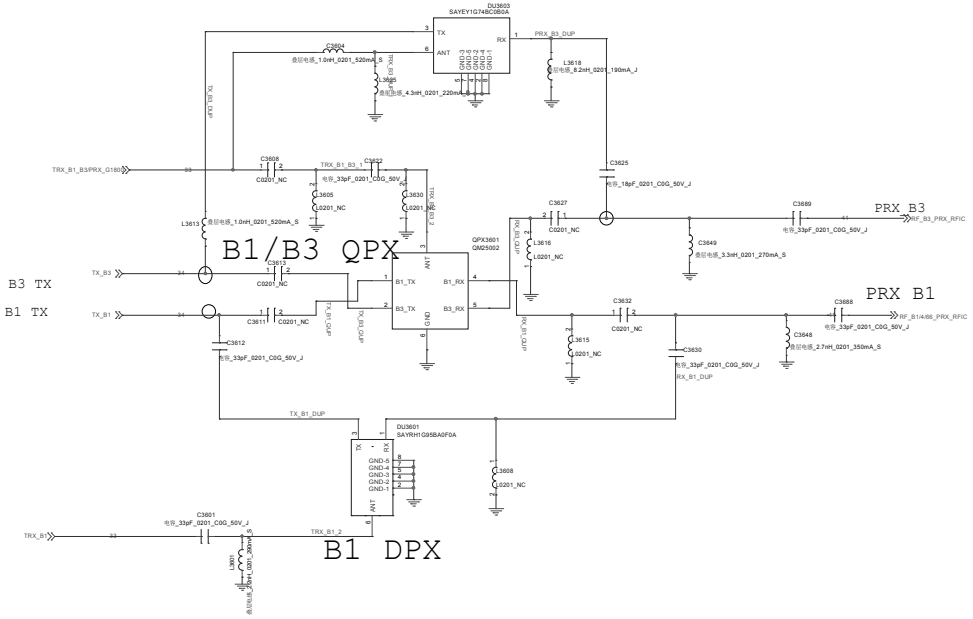

PRX_B1/4/66 SAW

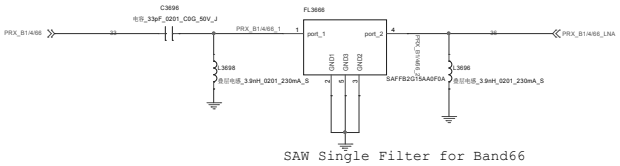

SAW Single Filter for Band66

B7 DPX

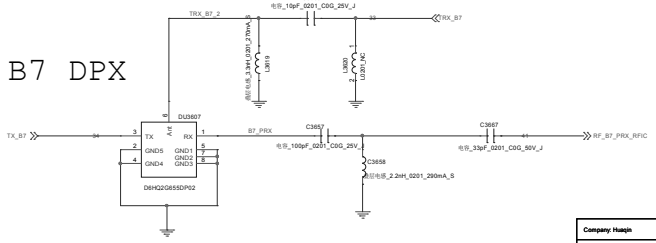

Company: Huaqin			
Block Title	TRX_MHB		
Project	Teifer	Rev	1.0
Date:	Friday, January 25, 2019	Sheet	36 of 35

DIVERSIT_ANT

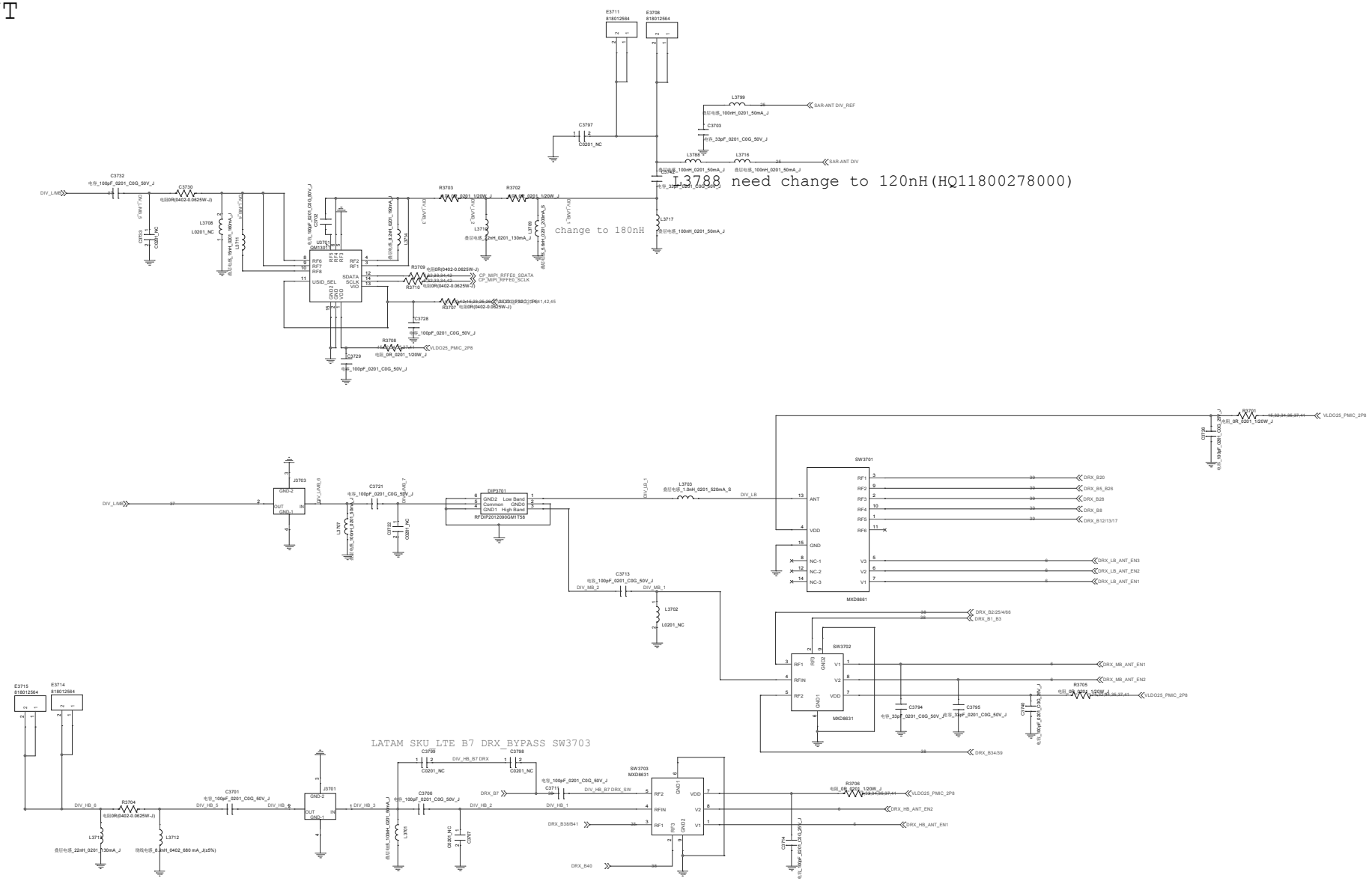

Company: Huaqin	
Block Title	DIVERSIT_ANT
Project	Telfer
Rev	1.0
Date:	Friday, January 25, 2019
Sheet	37 of 38

DRX_MB_HB

DRX_B1/3

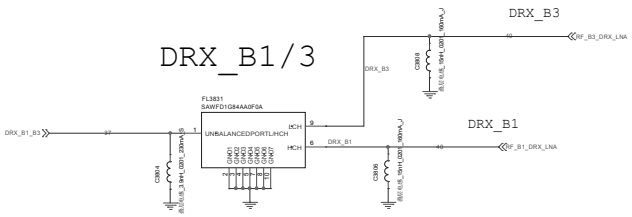

DRX_B40

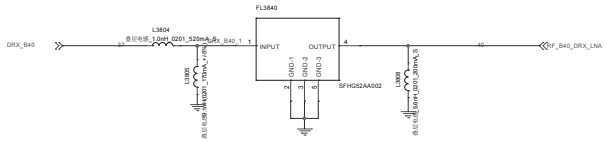

DRX_B2/25/4/66

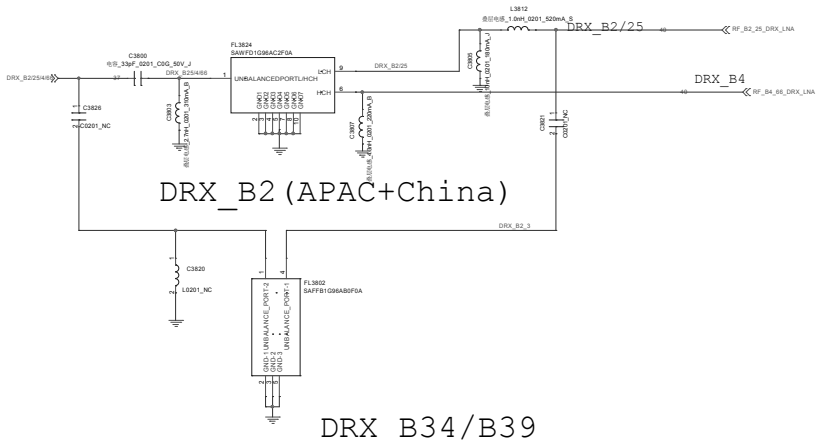

DRX_B38/41

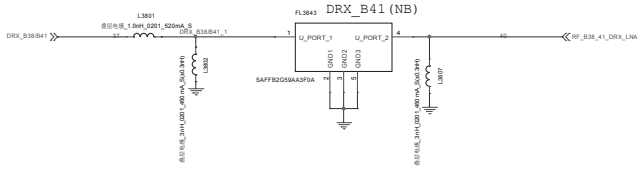

DRX_B34/B39

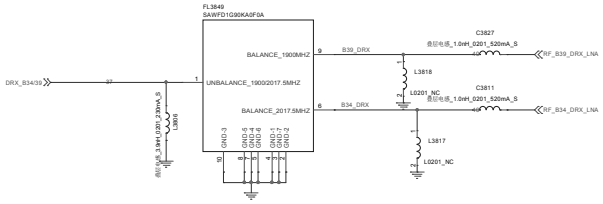

DRX_B7

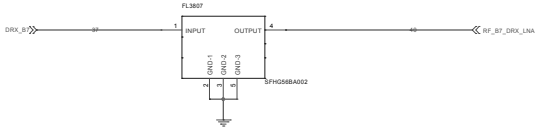

Company: Huaqin			
Block Title	DRX_MB_HB		
Project	Telfer	Rev	1.0
Date:	Friday, January 25, 2019	Sheet 38 of 37	

DRX_LB

DRX_B12/13/17

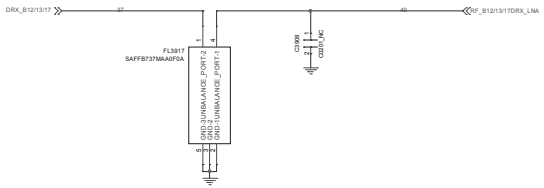

DRX_B8

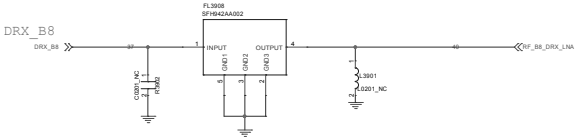

DRX_B28

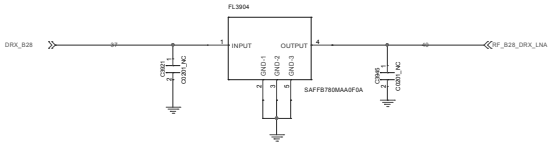

DRX_B5/26

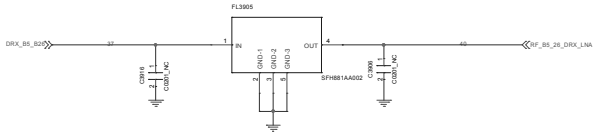

DRX_B20

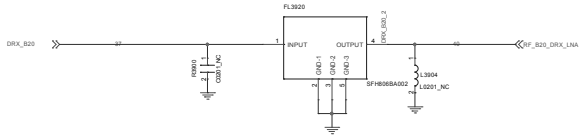

Company: Huaqin			
Block Title	DRX_LB		
Project	Telfer	Rev	1.0
Date:	Friday, January 25, 2019	Sheet	39 of 38

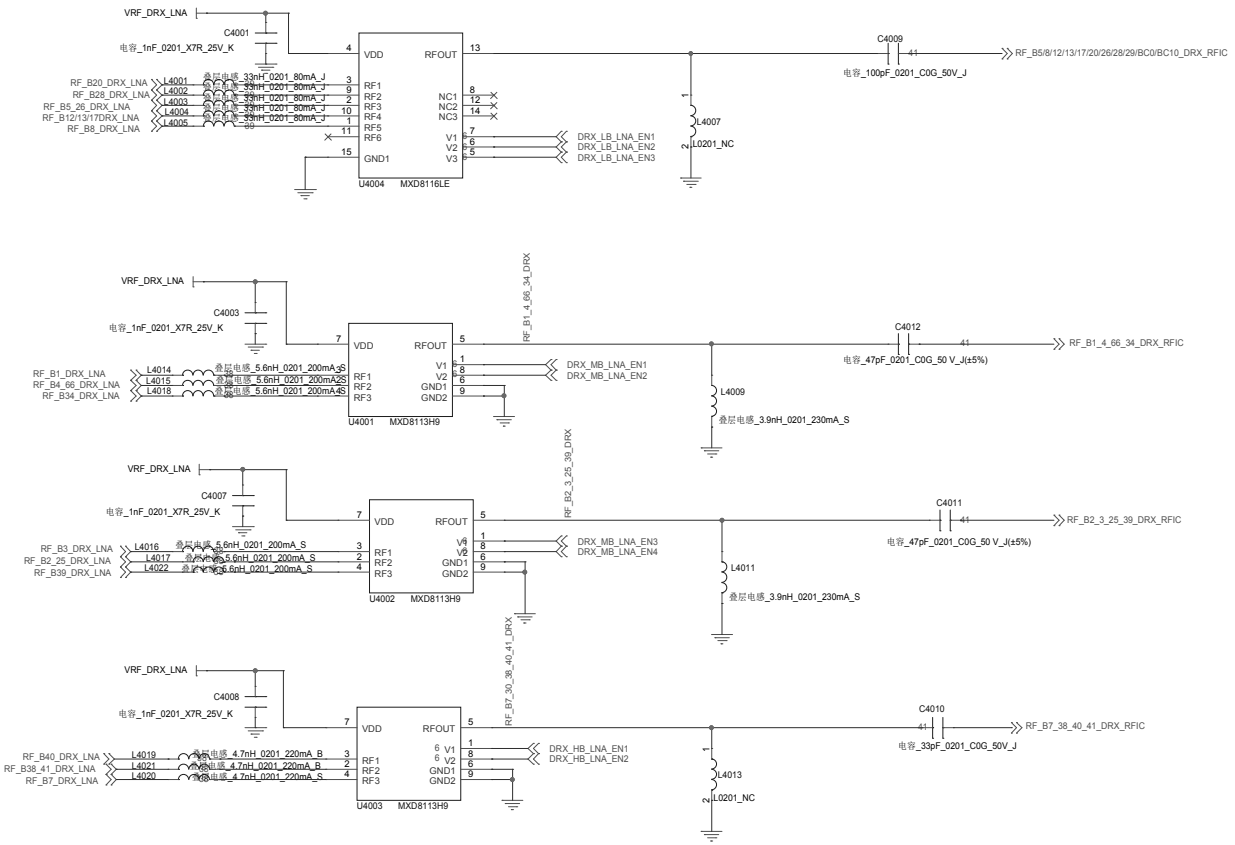

Company: Huaqin			
Block Title	DRX_LNA		
Project	Teller	Rev	1.0
Date:	Friday, January 25, 2019	Sheet	40 of 39

RFIC-S925

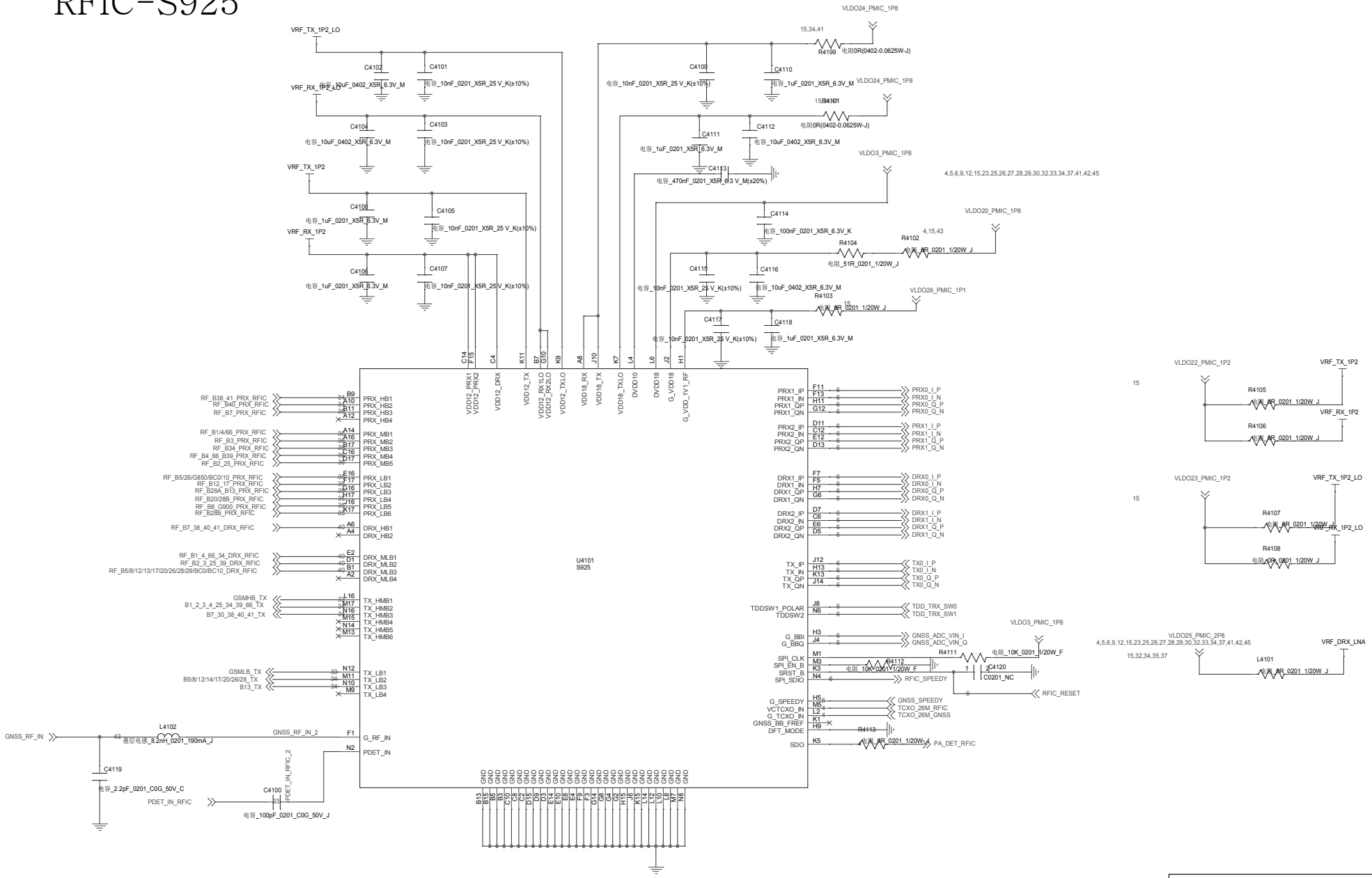

Title		
	<Title>	
Size C	Document Number <Doc>	Rev <RevCode>
Date: Friday, January 25, 2019	Sheet 41 of 40	

S2ABA01X01-6030 APT

APT
DC/DC

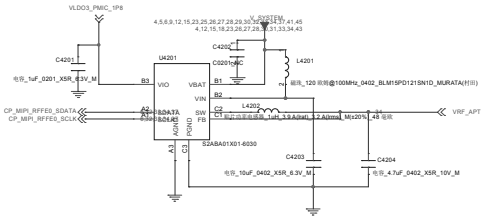

Company: Huaqin			
Block Title	QET4101		
Project	Teller	Rev	1.0
Date:	Friday, January 25, 2019	Sheet	42 of 41

WIFI_2.4G_5G & BT & GPS

for B13 2f0

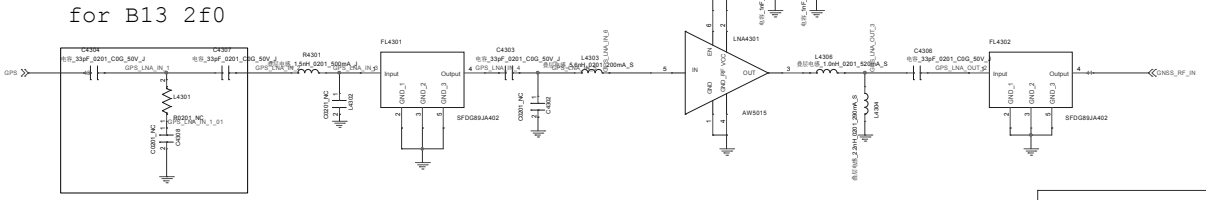

WIFI0 2.4G/BT/GPS

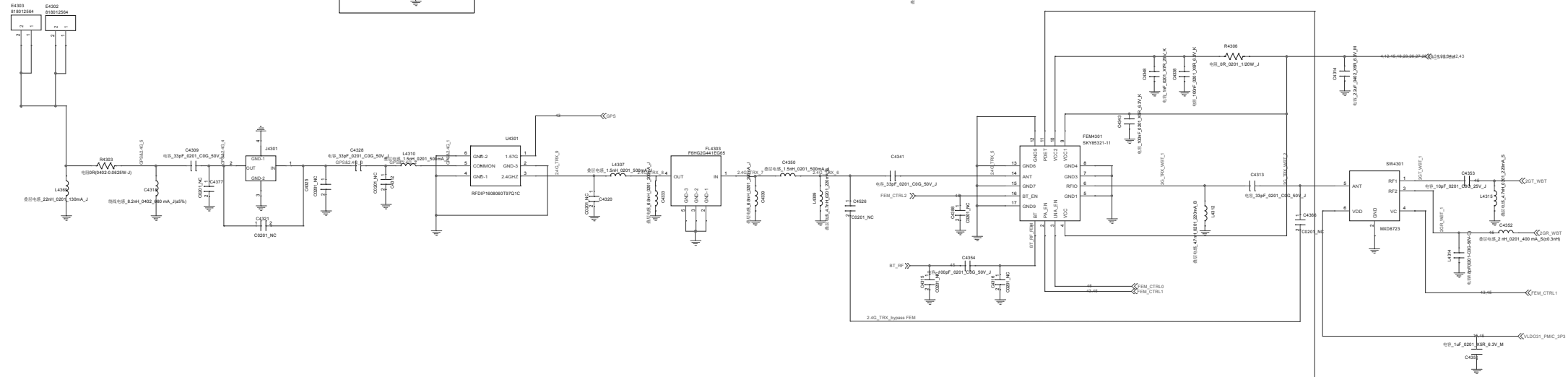

WIFI0 5G

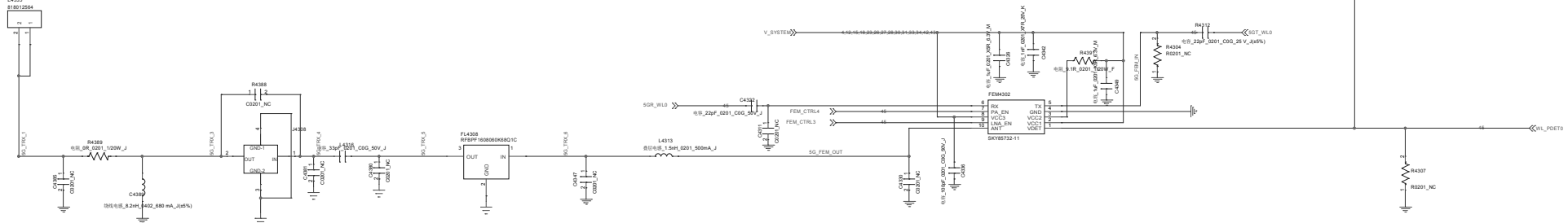

Company: Huaqin			
Block Title	GPS		
Project	Telfer	Rev	1.0
Date: Friday, January 25, 2019	Sheet 43 of 42		

Company: Huaqin			
Block Title	WIFI 2.4G/5G/BT		
Project	Teller	Rev	1.0
Date:	Friday, January 25, 2019	Sheet	44 of 43

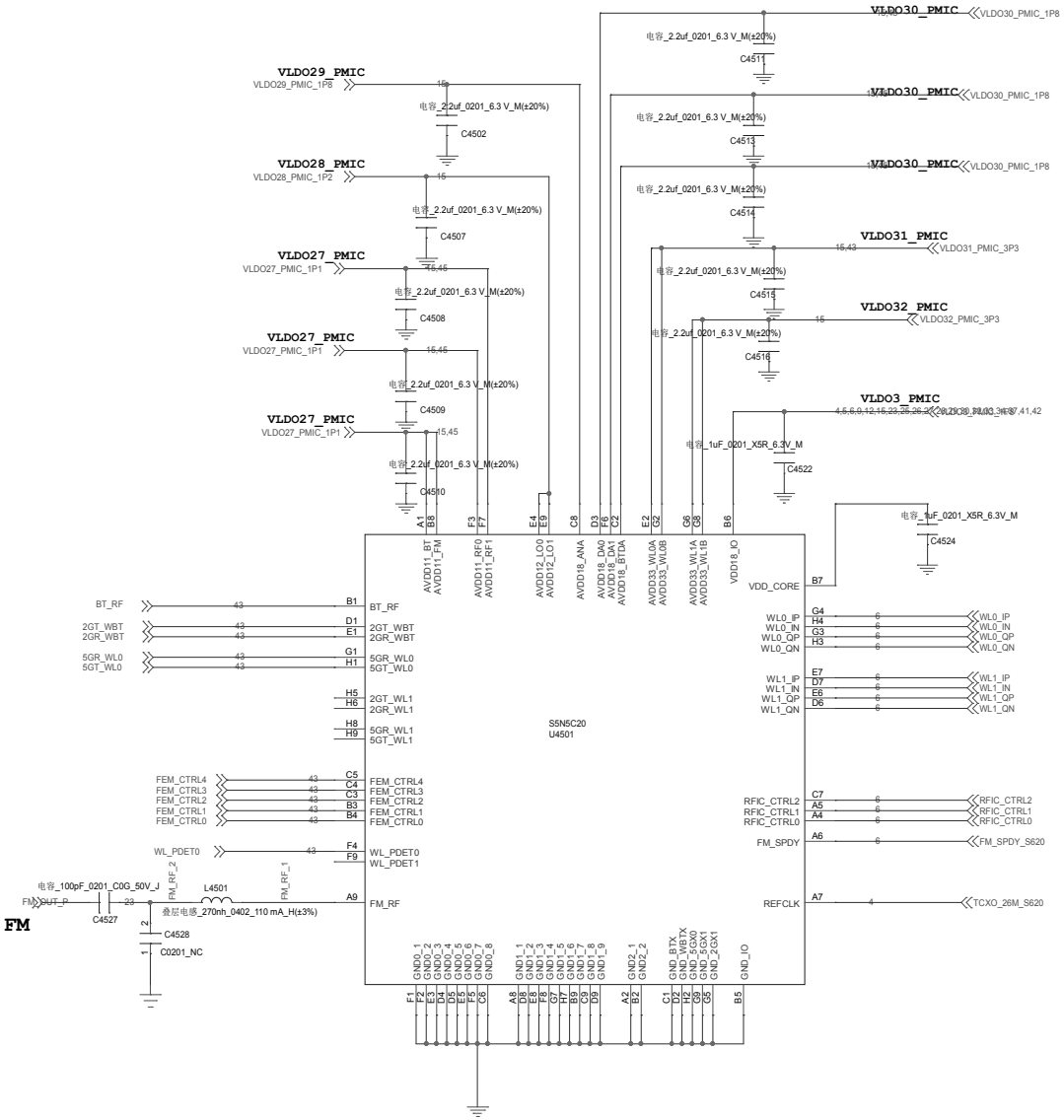

Title	<Title>	
Size C	Document Number <Doc>	Rev <RevCode>
Date: Friday, January 25, 2019	Sheet 45 of 44	